Product Data

WeatherMaker®
Applied Rooftop Units

20 to 60 Nominal Tons

48/50A020-060
Single-Package Gas Heating/Electric Cooling
Rooftop Units and Electric Cooling
Rooftop Units with Optional Electric Heat with *Comfort*Link Controls
and Puron® Refrigerant (R-410A)

© 2024 Carrier

Features/Benefits

Carrier's 48/50A applied packaged units offer design flexibility, quality, reliability, and *Comfort*Link controls.

Carrier's 48/50A Series commercial applied rooftops standard features include:

- Commercial grade construction
- Dedicated vertical or horizontal supply and return configurations
- Non-ozone depleting Puron® refrigerant (R-410A)
- Al/Cu round tube plate fin condenser coil
- Large face area Al/Cu evaporator coil for improved performance
- High efficiency scroll compressors
- Thermostatic expansion valve (TXV) for reliable operation
- Up to 4 stages of cooling capacity
- Dual, independent refrigerant circuits
- Cooling operation up to 115°F ambient and down to 32°F ambient
- Efficient forward curve supply fan with belt drive motor
- Multiple supply fan motor horsepower (HP) options
- Constant volume (CV), staged air volume (SAV™) or variable air volume (VAV) supply fan control
- Factory-installed and configured *Comfort*Link controls
- Easy to read Scrolling Marquee display
- Multiple cooling and heating control methods as standard
- Multiple voltage options
- Standard 5 kA short circuit current rating (SCCR)
- 2 in. filter rack with throwaway filters
- Aluminized steel condensate pan

Design flexibility

Dedicated vertical supply/return units (A2, A3, A6, A7) are ideal for new construction or retrofit to existing installations. The low unit profile is maintained when the unit is installed on the accessory roof curb. The supply and return ducts are attached directly to the roof curb to allow all ductwork to be completed before the unit is positioned.

Dedicated horizontal units (A4, A5, A8, A9) are ideal for new construction or retrofit through-the-wall applications or for applications requiring sound attenuation or additional filtration before the duct work penetrates the roof. Supply and return ducts connect directly to the unit. Horizontal units may be curb, slab, or structure mounted.

Units are selectable in an variety of supply fan control methodologies to meet project requirements, including constant volume (CV), staged air volume (SAV), and variable air volume (VAV). Units selected for SAV or VAV include a supply fan variable frequency drive (VFD).

With SAV control, *Comfort*Link automatically stages the fan speed during part load cooling or heating to provide energy savings, improved dehumidification, and reduced sound output. Additionally, *Comfort*Link can be configured to optimize SAV for dehumidification or sensible capacity.

VAV units include a pressure transducer that allows *Comfort*Link to modulate the supply fan speed based on duct static pressure. VAV supply fan operation can be used for a variety of applications, including multi-zone VAV with air terminal units, single zone VAV, or CV with filter loading.

*Comfort*Link controls

Factory-installed *Comfort*Link controls provide the capability for free-standing operation or may be linked with a more extensive system. The *Comfort*Link controls have the capability to communicate with the Carrier Comfort Network® (CCN) system and other building automation systems (BAS). This communication flexibility allows simple system integration with Carrier CCN systems and other BAS systems, as well as data collection, trending, monitoring, and alarm displays.

The *Comfort*Link controls are your link to a world of simple and easy-to-use rooftop units that offer outstanding performance and value. *Comfort*Link can be configured for a wide variety of applications, including single zone systems, multi-zone systems with VAV air terminal units, or multi-zone variable air volume and temperature (VVT) systems with VVT air terminal units. *Comfort*Link maintains control over the compressors, condenser fans, indoor fans, and the unit heat source (if equipped) for optimized operation and temperature control.

The *Comfort*Link scrolling marquee display is very easy to use. Messages are presented in easy to understand language. No decoding is required. A scrolling readout provides detailed explanations of control information. Only 4, large, easy-to-use buttons are required to maneuver through the entire menu. The readout is designed to be visible even in the brightest sunlight.

Environmentally balanced

Making an environmentally responsible decision is possible when using Carrier's Puron® refrigerant (R-410A). Puron refrigerant (R-410A) is an HFC refrigerant that does not contain chlorine that is damaging to the ozone layer. This refrigerant is a safe, efficient, and environmentally balanced refrigerant.

Quality and reliability

The unit cabinet features commercial grade construction from galvanized steel. The base pan, corner posts, side panels, and top cover are made from thick gauge steel to stand up to the rigors of transportation and installation. All units undergo a thorough factory run test and a quality review prior to shipment.

The compressors are equipped with crankcase heaters and protected by *Comfort*Link to control minimum on and off times and protect against reverse rotation. The refrigerant circuits are both electrically and

Table of contents

	Page
Features/Benefits	2
Model Number Nomenclature	4
Ratings and Capacities	6
Physical Data	10
Options and Accessories	15
Base Unit Dimensions	20
Accessory Dimensions	28
Selection Procedure	33
Performance Data	34
Controls	73
Application Data	88
Typical Wiring Schematics	91
Guide Specifications	98

mechanically independent, to provide standby capability should one circuit require service. Totally enclosed condenser fan motors are designed for many years of trouble-free operation.

Positive-locking bearings for the indoor fan reduce vibration of the supply fan assembly and remain locked during the life of the bearing. Supply fan bearings are pre-lubricated from the factory and are designed with an operating life of 200,000 hours at design conditions. The supply fan assembly also features a heavy duty shaft for reliable operation.

Gas heating units (48 series)

48A series units include a factory-installed natural gas heater with a tubular, dimpled gas heat exchanger to optimize heat transfer for improved efficiency. The tubular design permits hot gases to make multiple passes across the path of the supply air. The dimpled design creates a turbulent gas flow to increase heating efficiency. The extra thick Alumagard™ heat exchanger coating provides corrosion resistance to lengthen coil life.

All 48 series gas heaters are induced draft style combustion, which minimizes the need for flue stacks. The inducer fan draws hot combustion gas through the heat exchanger at the optimum rate for the most effective heat transfer. Induced draft heating systems are safer than positive pressure, forced draft heating systems. With the induced draft heating system, the heat exchanger operates under negative pressure, preventing flue gas leakage into the indoor supply air.

All ignition components are contained in the compact integrated gas controller (IGC), which is easily accessible for servicing and can improve heating efficiency. The IGC control board, designed and manufactured exclusively for Carrier rooftop units, provides built-in diagnostic capability. An LED simplifies troubleshooting by providing visual fault notification and system status confirmation, which can help reduce troubleshooting costs.

The IGC also contains anti-cycle protection and safety monitoring for gas heat operation. After 4 continuous cycles on the unit high-temperature limit switch, the gas heat operation is disabled, and an error code is issued. All units have a flame rectification sensor to quickly sense the burner flame and ignite burners almost immediately. The controls are designed to shut down the unit during any flame outage or circuit failure. The flame sensor reacts quickly to these events. In the event of a shutdown, an error code is issued at the IGC board.

During the heating mode, the supply fan relay automatically starts the evaporator fan after the heat exchanger warms up to a suitable temperature. To increase efficiency and comfort, the 30-second fan delay prevents cold air from entering the supply duct system when the conditioned space is calling for heat. The direct-spark ignition system saves operating expense when compared to pilot ignition systems. No crossover tube is required; therefore, no sooting or pilot-fouling problems can occur.

Installation and serviceability

Units are easy to rig using the included lifting points in the unit base rail. The baserail design allows the unit to be installed on curbs, slabs, pads, beams, or sleeper rails. The unique footprint of the 48/50A units allows for the unit to straddle a structural beam, which can reduce the need for a separate structural support for roof mounted applications. A special order for double wall bottom is available to protect the unit bottom insulation for applications not installed on roof curbs.

All units feature single point electrical connections as standard. Connections can be made through the base of the unit (from the curb) or from the side of the unit. Gas connections are made at the side of the unit for easy access.

Hinged access panels are provided for easy access to standard maintainable items or for service.

No fasteners need to be removed and no specialized tools are required, which reduces servicing time and helps prevent roof leaks caused by discarded screws. Color-coded wiring permits easy tracing and diagnostics. The supply fan motor is strategically located near the exterior of the unit, making belt changes and pulley changes a breeze. The supply fan bearings include a grease port for easy lubrication.

Unit setup, commissioning, and troubleshooting are simplified with the included *Comfort*Link controls. *Comfort*Link supports a wide variety of cooling and heating control methodologies, including space temperature (SPT) control for single zone systems, return air temperature (RAT) control for multi-zone systems, and third party input control (TSTAT). Third party input control provides versatility for cooling and heating control, allowing simple operation based on a two-stage cooling/heating thermostat or advanced operation from a third party control system using hardwired inputs or network points.

*Comfort*Link can also support multiple supply fan control and occupancy control methods. All units with a supply fan VFD are configurable for SAV, CV, or VAV supply fan control. VAV requires a field or factory provided and installed duct pressure transducer. Occupancy control can be accomplished using the internal unit scheduling function, occupancy switch, or occupancy signal from a CCN system or other BAS system.

The *Comfort*Link controls provide unparalleled service diagnostic information. Temperature and pressure can be read from the display with no need for separate gauges. Other data, such as compressor cycles, unit run time hours, and current alarms can also be accessed. A history of alarms is also available for viewing.

A service run test can be very helpful when troubleshooting. The user can run test major components to help determine the root cause of a problem. The unit can be run-tested before an installation is complete to support a satisfactory start-up.

Model number nomenclature

48A Units

48 A2 D 050 F E G 6 5 1 GN

48 – Cooling Unit with Gas Heat

Configuration
A2 – CV/SAV Vertical
A3 – VAV Vertical
A4 – CV/SAV Horizontal
A5 – VAV Horizontal
A6 – CV/SAV Vertical with Greenspeed Intelligence
A7 – VAV Vertical with Greenspeed Intelligence
A8 – CV/SAV Horizontal with Greenspeed Intelligence
A9 – VAV Horizontal with Greenspeed Intelligence

Heat Options
D – Low Gas Heat
E – High Gas Heat
F – Low Gas Heat with Humidi-MiZer
G – High Gas Heat with Humidi-MiZer
M – Low Gas Heat Stainless
N – High Gas Heat Stainless
S – Staged Low Gas Heat Stainless
T – Staged High Gas Heat Stainless
V – Staged Low Gas Heat Stainless with Humidi-MiZer
W – Staged High Gas Heat Stainless with Humidi-MiZer

Unit Size - Nominal Tons
020 – 20
025 – 25
027 – 27
030 – 30
035 – 35
040 – 40
050 – 50
060 – 60

Control Options
– – No Features
A – Controls Expansion Module with Phase Monitor
B – CO_2 Sensor
C – Smoke Detector
D – CO_2 Sensor and Smoke Detector
E – Plugged Filter Indicator and Lube Lines
F – Plugged Filter Indicator, Lube Lines and CO_2 Sensor
G – Plugged Filter Indicator, Lube Lines and Smoke Detector
H – Plugged Filter Indicator, Lube Lines, CO_2 Sensor and Smoke Detector
J – CO_2 Sensor with Controls Expansion Module and Phase Monitor
K – Smoke Detector with Controls Expansion Module and Phase Monitor
L – CO_2 Sensor and Smoke Detector with Controls Expansion Module and Phase Monitor
M – Plugged Filter Indicator and Lube Lines with Controls Expansion Module and Phase Monitor
N – Plugged Filter Indicator, Lube Lines and CO_2 Sensor with Controls Expansion Module and Phase Monitor
P – Plugged Filter Indicator, Lube Lines and Smoke Detector with Controls Expansion Module and Phase Monitor
Q – Plugged Filter Indicator, Lube Lines, CO_2 Sensor and Smoke Detector with Controls Expansion Module and Phase Monitor

Factory-Installed Options
Refer to price pages for available option codes.

Packaging/Communication
1 – Domestic
3 – Export
A – Domestic with BACnet Communication Option
C – Export with BACnet Communication Option

Design Series
5 – Fifth Revision

Voltage
1 – 575-3-60
5 – 208/230-3-60
6 – 460-3-60

Coil Options
– – Al/Cu Cond, Al/Cu Evap
A – Al/Cu Cond, Al/Cu Evap with Digital Compressor
B – Cu/Cu Cond, Al/Cu Evap with Digital Compressor
C – Cu/Cu Cond, Al/Cu Evap
D – Al/Cu Cond Precoat, Al/Cu Evap with Digital Compressor
E – Al/Cu Cond Precoat, Al/Cu Evap
F – E-coated Al/Cu, Al/Cu Evap
G – MCHX Cond, Al/Cu Evap
H – E-coated MCHX Cond, Al/Cu Evap
J – MCHX Cond with Coil Grilles, Al/Cu Evap
K – E-coated MCHX Cond with Coil Grilles, Al/Cu Evap
L – E-coated Al/Cu Cond, Al/Cu Evap with Digital Compressor
M – MCHX Cond, Al/Cu Evap with Digital Compressor
N – E-coated MCHX Cond, Al/Cu Evap with Digital Compressor
P – MCHX Cond with Coil Grilles, Al/Cu Evap with Digital Compressor
Q – Al/Cu Cond, Al/Cu Evap with Hot Gas Bypass
R – Cu/Cu Cond, Al/Cu Evap with Hot Gas Bypass
S – Al/Cu Cond Precoat, Al/Cu Evap with Hot Gas Bypass
T – E-coated Al/Cu, Al/Cu Evap with Hot Gas Bypass
V – MCHX Cond, Al/Cu Evap with Hot Gas Bypass (No Humidi-Mizer)
W – E-coated MCHX Cond, Al/Cu Evap with Hot Gas Bypass (No Humidi-Mizer)
X – MCHX Cond with Coil Grilles, Al/Cu Evap with Hot Gas Bypass (No Humidi-Mizer)
Y – E-coated MCHX Cond with Coil Grilles, Al/Cu Evap with Hot Gas Bypass (No Humidi-Mizer)
Z – E-coated MCHX Cond with Coil Grilles, Al/Cu Evap with Digital Compressor
2 – E-coated Al/Cu Cond, Al/Cu E-Coat Evap
3 – E-coated MCHX Cond, Al/Cu E-Coat Evap
4 – E-coated MCHX Cond with Coil Grilles, Al/Cu E-Coat Evap
5 – E-coated Al/Cu Cond, Al/Cu E-Coat Evap with Digital Compressor
6 – E-coated MCHX Cond, Al/Cu E-Coat Evap with Digital Compressor
7 – E-coated MCHX Cond with Coil Grilles, Al/Cu E-Coat Evap with Digital Compressor

Motor Options

No VFD	VFDB	VFD
A – 5 HP	**J** – 5 HP	**L** – 5 HP
C – 10 HP	**1** – 10 HP	**N** – 10 HP
D – 15 HP	**2** – 15 HP	**P** – 15 HP
E – 20 HP	**3** – 20 HP	**Q** – 20 HP
F – 25 HP	**4** – 25 HP	**R** – 25 HP
G – 30 HP	**5** – 30 HP	**S** – 30 HP
H – 40 HP	**6** – 40 HP	**T** – 40 HP

LEGEND
Al — Aluminum
Cu — Copper
CV — Constant Volume
MCHX — Microchannel Heat Exchanger
SAV — Staged Air Volume
VAV — Variable Air Volume
VFDB — Variable Frequency Drive Bypass

NOTES:
1. VAV and SAV models are equipped with a supply fan motor variable frequency drive (VFD).
2. All indoor fan motors meet the minimum efficiency requirements as established by the Energy Independence and Security Act (EISA) 2007.

Quality Assurance

ISO 9001:2015-certified processes

ASHRAE 90.1 COMPLIANT

When equipped with SAV™ or VAV supply fan

AHRI CERTIFIED™ www.ahridirectory.org
Unitary Large AC
AHRI Standard 340/360
Certification applies only when the complete system is listed with AHRI.

All units with SAV™, VAV, or CV with Greenspeed® Intelligence

Model number nomenclature (cont)

50A Units

50 A2 E 050 F E G 6 4 1 GN

50 – Cooling Unit

Configuration
A2 – CV/SAV Vertical
A3 – VAV Vertical
A4 – CV/SAV Horizontal
A5 – VAV Horizontal
A6 – CV/SAV Vertical with Greenspeed Intelligence
A7 – VAV Vertical with Greenspeed Intelligence
A8 – CV/SAV Horizontal with Greenspeed Intelligence
A9 – VAV Horizontal with Greenspeed Intelligence

Heat Options
- – No heat
B – 36/27 kW
C – 72/54 kW
D – 54/42 kW
E – 108/81 kW
F – No heat with Humidi-MiZer
G – 36/27 kW with Humidi-MiZer
H – 72/54 kW with Humidi-MiZer
J – 54/42 kW with Humidi-MiZer
K – 108/81 kW with Humidi-MiZer

Unit Size - Nominal Tons
020 – 20
025 – 25
027 – 27
030 – 30
035 – 35
040 – 40
050 – 50
060 – 60

Control Options
– – No Features
A – Controls Expansion Module with Phase Monitor
B – CO_2 Sensor without Controls Expansion Module
C – Smoke Detector
D – CO_2 Sensor and Smoke Detector
E – Plugged Filter Indicator and Lube Lines
F – Plugged Filter Indicator, Lube Lines and CO_2 Sensor
G – Plugged Filter Indicator, Lube Lines and Smoke Detector
H – Plugged Filter Indicator, Lube Lines, CO_2 Sensor and Smoke Detector
J – CO_2 Sensor with Controls Expansion Module and Phase Monitor
K – Smoke Detector with Controls Expansion Module and Phase Monitor
L – CO_2 Sensor and Smoke Detector with Controls Expansion Module and Phase Monitor
M – Plugged Filter Indicator and Lube Lines with Controls Expansion Module and Phase Monitor
N – Plugged Filter Indicator, Lube Lines and CO_2 Sensor with Controls Expansion Module and Phase Monitor
P – Plugged Filter Indicator, Lube Lines and Smoke Detector with Controls Expansion Module and Phase Monitor
Q – Plugged Filter Indicator, Lube Lines, CO_2 Sensor and Smoke Detector with Controls Expansion Module and Phase Monitor

Factory-Installed Options
Refer to price pages for available option codes.

Packaging/Communication
1 – Domestic
3 – Export
A – Domestic with BACnet Communication Option
C – Export with BACnet Communication Option

Design Series
4 – A Series

Voltage
1 – 575-3-60
2 – 380-3-60
5 – 208/230-3-60
6 – 460-3-60

Coil Options
– – Al/Cu Cond, Al/Cu Evap
A – Al/Cu Cond, Al/Cu Evap with Digital Compressor
B – Cu/Cu Cond, Al/Cu Evap with Digital Compressor
C – Cu/Cu Cond, Al/Cu Evap
D – Al/Cu Cond Precoat, Al/Cu Evap with Digital Compressor
E – Al/Cu Cond Precoat, Al/Cu Evap
F – E-coated Al/Cu, Al/Cu Evap
G – MCHX Cond, Al/Cu Evap
H – E-coated MCHX Cond, Al/Cu Evap
J – MCHX Cond with Coil Grilles, Al/Cu Evap
K – E-coated MCHX Cond with Coil Grilles, Al/Cu Evap
L – E-coated Al/Cu Cond, Al/Cu Evap with Digital Compressor
M – MCHX Cond, Al/Cu Evap with Digital Compressor
N – E-coated MCHX Cond, Al/Cu Evap with Digital Compressor
P – MCHX Cond with Coil Grilles, Al/Cu Evap with Digital Compressor
Q – Al/Cu Cond, Al/Cu Evap with Hot Gas Bypass
R – Cu/Cu Cond, Al/Cu Evap with Hot Gas Bypass
S – Al/Cu Cond Precoat, Al/Cu Evap with Hot Gas Bypass
T – E-coated Al/Cu, Al/Cu Evap with Hot Gas Bypass
V – MCHX Cond, Al/Cu Evap with Hot Gas Bypass (No Humidi-Mizer)
W – E-coated MCHX Cond, Al/Cu Evap with Hot Gas Bypass (No Humidi-Mizer)
X – MCHX Cond with Coil Grilles, Al/Cu Evap with Hot Gas Bypass (No Humidi-Mizer)
Y – E-coated MCHX Cond with Coil Grilles, Al/Cu Evap with Hot Gas Bypass (No Humidi-Mizer)
Z – E-coated MCHX Cond with Coil Grilles, Al/Cu Evap with Digital Compressor
2 – E-coated Al/Cu Cond, Al/Cu E-Coat Evap
3 – E-coated MCHX Cond, Al/Cu E-Coat Evap
4 – E-coated MCHX Cond with Coil Grilles, Al/Cu E-Coat Evap
5 – E-coated Al/Cu Cond, Al/Cu E-Coat Evap with Digital Compressor
6 – E-coated MCHX Cond, Al/Cu E-Coat Evap with Digital Compressor
7 – E-coated MCHX Cond with Coil Grilles, Al/Cu E-Coat Evap with Digital Compressor

Motor Options

No VFD	VFDB	VFD
A – 5 HP	**J** – 5 HP	**L** – 5 HP
C – 10 HP	**1** – 10 HP	**N** – 10 HP
D – 15 HP	**2** – 15 HP	**P** – 15 HP
E – 20 HP	**3** – 20 HP	**Q** – 20 HP
F – 25 HP	**4** – 25 HP	**R** – 25 HP
G – 30 HP	**5** – 30 HP	**S** – 30 HP
H – 40 HP	**6** – 40 HP	**T** – 40 HP

LEGEND
Al — Aluminum
Cu — Copper
CV — Constant Volume
MCHX — Microchannel Heat Exchanger
SAV — Staged Air Volume
VAV — Variable Air Volume
VFDB — Variable Frequency Drive Bypass

NOTES:
1. VAV and SAV models are equipped with a supply fan motor variable frequency drive (VFD).
2. All indoor fan motors meet the minimum efficiency requirements as established by the Energy Independence and Security Act (EISA) 2007.

Quality Assurance

ISO 9001:2015-certified processes

ASHRAE 90.1 COMPLIANT

When equipped with SAV™ or VAV supply fan

AHRI CERTIFIED™ www.ahridirectory.org
Unitary Large AC
AHRI Standard 340/360
Certification applies only when the complete system is listed with AHRI.

All units with SAV™, VAV, or CV with Greenspeed® Intelligence

Ratings and capacities

Electric Resistance Heater Data

UNIT 50A	HEATER kW Unit Voltages				HEATER STAGES	% HEAT PER STAGE	DESIGN RANGE	
	208	230	460	575			Min CFM	Max CFM
020-035 LO HEAT	27	36	36	36	1	100	6,000	15,000
020-035 HIGH HEAT	54	72	72	72	2	50/100	6,000	15,000
040,050 LO HEAT	27	36	36	36	1	100	10,500	20,000
040,050 HIGH HEAT	54	72	72	72	2	50/100	10,500	20,000
060 LO HEAT	41	54	54	54	1	100	15,000	27,000
060 HIGH HEAT	81	108	108	108	2	50/100	15,000	27,000

NOTE: Due to the open design of the electric heaters, the airside pressure drop is negligible.

Cooling Cfm Operating Range

UNIT	MIN CFM [a]	MAX CFM[a]
48/50A2,A4,A6,A8020	6,000	10,000
48/50A3,A5,A7,A9020	4,000 [b]	10,000
48/50A2,A4,A6,A8025	7,000	12,500
48/50A3,A5,A7,A9025	5,000 [b]	12,500
48/50A2,A4,A6,A8027	8,100	13,500
48/50A3,A5,A7,A9027	5,400 [b]	13,500
48/50A2,A4,A6,A8030	9,000	15,000
48/50A3,A5,A7,A9030	6,000 [b]	15,000
48/50A2,A4,A6,A8035	10,500	17,500
48/50A3,A5,A7,A9035	7,000 [b]	17,500
48/50A2,A4,A6,A8040	12,000	20,000
48/50A3,A5,A7,A9040	8,000 [b]	20,000
48/50A2,A4,A6,A8050	13,500	20,000
48/50A3,A5,A7,A9050	10,000 [b]	20,000
48/50A2,A4,A6,A8060	18,000	27,000
48/50A3,A5,A7,A9060	12,000 [b]	27,000

NOTE(S):

a. Operation at these levels may be limited by entering evaporator air wet bulb temperatures. See Cooling Capacities tables on pages 35-58 for further details.

b. VAV units with variable capacity compressor can operate down to 100 cfm/ton. VAV units with standard scroll compressor or Humidi-MiZer are limited to 200 cfm/ton. Operation may be additionally limited by entering coil conditions.

Ratings and capacities (cont)

Gas Heating Capacities and Efficiencies

Standard Units

UNITS 48A	INPUT (Btuh)		MAXIMUM OUTPUT (Btuh)	TEMPERATURE RISE (F)	STEADY-STATE EFFICIENCY (%)	DESIGN RANGE	
	Stage 1	Stage 2				Min Cfm	Max Cfm
020-030 LO HEAT	262,500	350,000	283,500	15 to 45	81	5,900	15,000
020-030 HIGH HEAT	394,000	525,000	425,250	35 to 65	81	6,100	11,400
035 LO HEAT	262,500	350,000	283,500	15 to 45	81	5,900	15,000
035 HIGH HEAT	600,000	800,000	648,500	30 to 60	81	10,100	20,200
040,050 LO HEAT	300,000	400,000	324,000	10 to 40	81	7,600	22,500
040,050 HIGH HEAT	600,000	800,000	648,000	30 to 60	81	10,100	20,200
060 LO HEAT	582,000	776,000	628,560	10 to 40	81	11,000	27,000
060 HIGH HEAT DS	873,000	1,164,000	942,840	30 to 60	81	14,550	27,000
060 HIGH HEAT SS	731,000	975,000	789,750	30 to 60	81	12,188	24,375

Units with Staged Gas Option

UNITS 48A	STAGES OF GAS CONTROL (% of Full Heat Output)	MIN. OUTPUT (Btuh)	MAX. OUTPUT (Btuh)	DESIGN RANGE	
				Min Cfm	Max Cfm
020-030 LO HEAT	38, 50, 75, 88, 100	107,730	283,500	5,900	15,000
020-030 HIGH HEAT	25, 33, 50, 67, 75, 83, 100	106,313	425,250	6,100	11,400
035 LO HEAT	38, 50, 75, 88, 100	107,730	283,500	5,900	15,000
035 HIGH HEAT	38, 50, 75, 88, 100	246,240	648,000	10,100	20,200
040,050 LO HEAT	38, 50, 75, 88, 100	123,120	324,000	7,600	22,500
040,050 HIGH HEAT	38, 50, 75, 88, 100	246,240	648,000	10,100	20,200
060 LO HEAT	19, 25, 38, 44, 50, 56, 63, 75, 88, 94, 100	119,426	628,560	11,000	27,000
060 HIGH HEAT DS	25, 33, 50, 58, 67, 75, 83, 92, 100	235,710	942,840	14,550	27,000
060 HIGH HEAT SS	25, 33, 50, 58, 67, 75, 83, 92, 100	197,438	789,750	12,188	24,375

NOTES:

1. In some cases, maximum cfm may be limited by maximum cooling airflow value.
2. Ratings are approved for altitudes to 2000 feet. At altitudes over 2000 ft, ratings are 4% less for each 1000 ft greater than 2000 ft above sea level.
3. At altitudes up to 2000 ft, the following formula may be used to calculate air temperature rise:

$$\Delta t = \frac{\text{Output capacity}}{1.10 \times \text{air quantity}}$$

4. At altitudes above 2000 ft, the following formula may be used:

$$\Delta t = \frac{\text{Output capacity}}{(.24 \times \text{specific weight of air} \times 60)\ (\text{air quantity})}$$

5. On standard gas heat with aluminized heat exchangers, the minimum allowable mixed air entering the heat exchanger during half-rate (first stage) operation is 50°F. There is no minimum limitation for full-rate operation.
6. Total unit design is listed by UL.

Capacity Control Staging Options

APPLICATION	UNIT	DEMAND SOURCE	COOLING CONTROL METHOD	COMPRESSOR SEQUENCE					
				SIZE 020-027 UNITS			SIZE 030-060 UNITS		
				WITHOUT HOT GAS BYPASS	WITH HOT GAS BYPASS	WITH VARIABLE CAPACITY COMPRESSOR	WITHOUT HOT GAS BYPASS	WITH HOT GAS BYPASS	WITH VARIABLE CAPACITY COMPRESSOR
VAV	48/50A3,A5, A7,A9	RAT	Multiple Stage EDT	Table A	Table B	Table C	Table D	Table E	Table F
		SPT	Multiple Stage EDT	Table A	Table B	Table C	Table D	Table E	Table F
SAV/CV Sensor	48/50A2,A4, A6,A8	SPT	Multiple Adaptive Demand	Table A	Table B	Table C	Table D	Table E	Table F
SAV/CV, Mech Thermostat		Y1,Y2	Multiple Adaptive Demand	Table A	Table B	Table C	Table D	Table E	Table F

LEGEND

CV — Constant Volume
EDT — Evaporator Discharge Temperature
RAT — Return Air Temperature
SAV — Staged Air Volume
SPT — Space Temperature
VAV — Variable Air Volume

Capacity Control Staging Options Table A

48/50A020-027 Units VAV and Adaptive CV/SAV Staging Sequence without Hot Gas Bypass

STAGE	SEQUENCE 1				SEQUENCE 2			
	0	1	2	3	0	1	2	3
COMP	Compressor Status				Compressor Status			
A1	OFF	ON	OFF	ON	OFF	OFF	ON	ON
A2	OFF	OFF	ON	ON	OFF	ON	OFF	ON
B1	OFF	OFF	ON	ON	OFF	OFF	ON	ON
UNIT	Capacity 48/50A				Capacity 48/50A			
020	0%	30%	70%	100%	0%	30%	70%	100%
025	0%	33%	67%	100%	0%	33%	67%	100%
027	0%	33%	67%	100%	0%	33%	67%	100%

Capacity Control Staging Options Table B

48/50A020-027 Unit VAV and Adaptive CV Staging Sequence with Hot Gas Bypass

STAGE	SEQUENCE 1					SEQUENCE 2				
	0	1	2	3	4	0	1	2	3	4
COMP	Compressor Status					Compressor Status				
A1	OFF	ON[a]	ON	OFF	ON	OFF	OFF	OFF	ON	ON
A2	OFF	OFF	OFF	ON	ON	OFF	ON[a]	ON	OFF	ON
B1	OFF	OFF	OFF	ON	ON	OFF	OFF	OFF	ON	ON
UNIT	Capacity 48/50A					Capacity 48/50A				
020	0%	10%	30%	70%	100%	0%	10%	30%	70%	100%
025	0%	17%	33%	67%	100%	0%	17%	33%	67%	100%
027	0%	17%	33%	67%	100%	0%	17%	33%	67%	100%

NOTE(S):

a. Hot gas bypass activated.

Capacity Control Staging Options Table C

48/50A020-027 Units VAV and Adaptive CV/SAV Staging Sequence with Variable Capacity Compressor

	STAGE			
	0	1	2	3
COMP	Compressor Status			
A1	OFF	OFF	ON	ON
A2	OFF	OFF	OFF	ON
B1[a]	OFF	ON	ON	ON
UNIT	Capacity 48/50A			
020	0%	20% to 40%	50% to 70%	80% to 100%
025	0%	17% to 33%	50% to 66%	83% to 100%
027	0%	17% to 33%	50% to 66%	83% to 100%

NOTE(S):

a. On units with optional digital scroll compressor, compressor B1 modulates from minimum to maximum capacity to provide increased stages.

Capacity Control Staging Options Table D

48/50A030-060 Units VAV and Adaptive CV/SAV Staging Sequence without Hot Gas Bypass

STAGE	SEQUENCE 1					SEQUENCE 2				
	0	1	2	3	4	0	1	2	3	4
COMP	Compressor Status					Compressor Status				
A1	OFF	ON	OFF	OFF	ON	OFF	OFF	ON	ON	ON
A2	OFF	OFF	ON	ON	ON	OFF	ON	OFF	ON	ON
B1	OFF	OFF	ON	ON	ON	OFF	OFF	ON	ON	ON
B2	OFF	OFF	OFF	ON	ON	OFF	OFF	OFF	OFF	ON
UNIT	Capacity 48/50A					Capacity 48/50A				
030	0%	25%	50%	75%	100%	0%	25%	50%	75%	100%
035	0%	20%	50%	80%	100%	0%	20%	50%	70%	100%
040	0%	25%	50%	75%	100%	0%	25%	50%	75%	100%
050	0%	25%	50%	75%	100%	0%	25%	50%	75%	100%
060	0%	25%	50%	75%	100%	0%	25%	50%	75%	100%

Capacity Control Staging Options Table E

48/50A030-060 Units VAV and Adaptive CV/SAV Staging Sequence with Hot Gas Bypass Staging Sequence

STAGE	SEQUENCE 1						SEQUENCE 2					
	0	1	2	3	4	5	0	1	2	3	4	5
COMP	Compressor Status						Compressor Status					
A1	OFF	ON[a]	ON	OFF	OFF	ON	OFF	OFF	OFF	ON	ON	ON
A2	OFF	OFF	OFF	ON	ON	ON	OFF	ON[a]	ON	OFF	ON	ON
B1	OFF	OFF	OFF	ON	ON	ON	OFF	OFF	OFF	ON	ON	ON
B2	OFF	OFF	OFF	OFF	ON	ON	OFF	OFF	OFF	OFF	OFF	ON
UNIT	Capacity 48/50A						Capacity 48/50A					
030	0%	10%	25%	50%	75%	100%	0%	10%	25%	50%	75%	100%
035	0%	7%	20%	50%	80%	100%	0%	7%	20%	50%	70%	100%
040	0%	14%	25%	50%	75%	100%	0%	14%	25%	50%	75%	100%
050	0%	16%	25%	50%	75%	100%	0%	16%	25%	50%	75%	100%
060	0%	18%	25%	50%	75%	100%	0%	18%	25%	50%	75%	100%

NOTE(S):

a. Hot gas bypass activated.

Capacity Control Staging Options Table F

48/50A030-060 Units VAV and Adaptive CV/SAV Staging Sequence with Variable Capacity Compressor

STAGE	SEQUENCE 1				
	0	1	2	3	4
COMP	Compressor Status				
A1[a]	OFF	ON	ON	ON	ON
A2	OFF	OFF	OFF	ON	ON
B1	OFF	OFF	ON	ON	ON
B2	OFF	OFF	OFF	OFF	ON
UNIT	Capacity 48/50A				
030	0%	12.5% to 25%	37.5% to 50%	62.5% to 75%	87.5% to 100%
035	0%	9.8% to 19.6%	29.4% to 39.4%	59.8% to 69.6%	90.2% to 100%
040	0%	12.5% to 25%	37.5% to 50%	62.5% to 75%	87.5% to 100%
050	0%	12.5% to 25%	37.5% to 50%	62.5% to 75%	87.5% to 100%
060	0%	12.5% to 25%	37.5% to 50%	62.5% to 75%	87.5% to 100%

NOTE(S):

a. On units with optional digital scroll compressor, compressor A1 modulates from minimum to maximum capacity to provide increased stages.

Altitude Compensation — 48A Units

ELEVATION (ft)	SIZES 020-035		SIZES 040-060	
	Natural Gas Orifice Drill Bit Size[a]	Liquid Propane Orifice Drill Bit Size[a]	Natural Gas Orifice Drill Bit Size[a]	Liquid Propane Orifice Drill Bit Size[a]
0-2,000	34	43	31	41
2,001- 3,000	7/64	44	32	3/32
3,001- 4,000	36	45	33	43
4,001- 5,000	37	45	33	43
5,001- 6,000	38	45	34	44
6,001- 7,000	39	47	36	44
7,001- 8,000	40	47	36	45
8,001- 9,000	41	48	37	45
9,001-10,000	3/32	48	38	45
10,001-11,000	42	49	39	47
11,001-12,000	43	49	40	5/64
12,001-13,000	43	50	41	48
13,001-14,000	44	50	3/32	49

NOTE(S):

a. Orifices available through your local Carrier distributor.

Physical data — 48A units

UNIT 48A	020			025			027			030		
NOMINAL CAPACITY (tons)	20			25			27			30		
BASE UNIT OPERATING WEIGHT (lb)	See Applied RTU Builder											
COMPRESSOR												
Quantity ... Type (Ckt 1/Ckt 2)	2 ... ZP67/1…ZP91			2 ... ZP91/1…ZP91			2 ... ZP91/1…ZP91			2…ZP72, 2…ZP72		
Number of Refrigerant Circuits	2			2			2			2		
Oil	Precharged			Precharged			Precharged			Precharged		
REFRIGERANT	R-410A											
Operating Charge (lb), Ckt 1/Ckt 2												
RTPF Coils	25.8/18.6			30.2/15.2			32.8/16.5			30.5/34.3		
MCHX Coils	14.5/11.6			16.5/11.0			16.5/11.0			15.1/15.3		
MCHX Coils with Humidi-MiZer	21.7/11.6			23.7/11.0			23.7/11.0			15.1/22.5		
MCHX CONDENSER*												
Quantity	1			1			1			1		
Total Face Area (sq ft)	32.9			32.9			32.9			32.9		
RTPF CONDENSER												
Quantity	1			1			1			1		
Rows...Fins/in.	2...15			3...15			3...15			4...15		
Total Face Area (sq ft)	33.3			33.3			33.3			33.3		
CONDENSER FAN	Propeller Type											
Nominal Cfm	19,500			19,500			19,500			19,500		
Quantity... Diameter (in.)	2 ... 30			2 ... 30			2 ... 30			2 ... 30		
Motor Hp	1			1			1			1		
EVAPORATOR COIL	Cross-Hatched Copper Tubes, Aluminum Plate Fins with Intertwined Circuits											
Tube Size (in.)	3/8			3/8			3/8			3/8		
Rows ... Fins/in.	3 ... 15			4 ... 14			4 ... 15			4 ... 15		
Total Face Area (sq ft)	31.7			31.7			31.7			31.7		
HUMIDI-MIZER COIL												
Coil Construction	E-Coated Aluminum Novation® Heat Exchanger with Microchannel Coil Technology											
Quantity	1			1			1			1		
Face Area (sq ft)	14.4			14.4			14.4			14.4		
EVAPORATOR FAN	Centrifugal Type											
Quantity ... Size (in.)	2 ... 20 X 15			2 ... 20 X 15			2 ... 20 X 15			2 ... 20 X 15		
Type Drive	Belt			Belt			Belt			Belt		
Nominal Cfm	8,000			10,000			11,000			12,000		
Motor Hp	5	10	15	5	10	15	10	15	20	10	15	20
Motor Frame Size	184T	215T	254T	184T	215T	254T	215T	254T	256T	215T	254T	256T
Motor Bearing Type	Ball			Ball			Ball			Ball		
Maximum Allowable Rpm	1200			1200			1200			1200		
Motor Pulley Pitch Diameter	4.8	4.4	5.7	5.2	6.1	5.5	4.4	4.9	5.9	4.4	5.7	5.9
Nominal Motor Shaft Diameter (in.)	1-1/8	1-3/8	1-5/8	1-1/8	1-3/8	1-5/8	1-3/8	1-5/8	1-5/8	1-3/8	1-5/8	1-5/8
Fan Pulley Pitch Diameter (in.)	12.4	8.6	9.1	12.4	11.1	8.7	9.4	8.1	8.7	9.0	9.1	8.7
Nominal Fan Shaft Diameter (in.)	1-15/16			1-15/16			1-15/16			1-15/16		
Belt Quantity	1	2	2	1	1	2	2	2	2	2	2	2
Belt Type	BX56	BX50	5VX530	BX56	5VX570	5VX530	BX50	5VX500	5VX530	BX50	5VX530	5VX530
Belt Length (in.)	56	63	53	56	57	53	50	50	53	50	53	53
Pulley Center Line Distance (in.)	16.0-18.7	15.6-18.4	15.0-17.9	15.6-18.4	15.6-18.4	15.0-17.9	15.6-18.4	15.0-17.9	15.0-17.9	15.6-18.4	15.0-17.9	15.0-17.9
Factory Speed Setting (rpm)	717	924	1096	773	962	1106	848	1059	1187	856	1096	1187
FURNACE SECTION												
Supply Line Pressure Range	5.0-in. wg min/13.5-in. wg max.											
Rollout Switch Cutout Temp (F)†	225			225			225			225		
Burner Orifice Diameter (in. ...drill size)												
Natural Gas (Std)	.111 ... 34			.111 ... 34			.111 ... 34			.111 ... 34		
Liquid Propane (Alt)	.089 ... 43			.089 ... 43			.089 ... 43			.089 ... 43		
Thermostat Heat Anticipator Setting												
Stage 1 (amps)	0.1			0.1			0.1			0.1		
Stage 2 (amps)	0.1			0.1			0.1			0.1		
Gas Input (Btuh) Stage 1 (Low Heat/High Heat)	262,500/394,000			262,500/394,000			262,500/394,000			262,500/394,000		
Stage 2 (Low Heat/High Heat)	350,000/525,000			350,000/525,000			350,000/525,000			350,000/525,000		
Efficiency (Steady State) (%)	81			81			81			81		
Temperature Rise Range	15-45/35-65			15-45/35-65			15-45/35-65			15-45/35-65		
Manifold Pressure (in. wg)												
Natural Gas (Std)	3.5			3.5			3.5			3.5		
Liquid Propane (Alt)	3.5			3.5			3.5			3.5		
Gas Valve Quantity	2			2			2			2		
HIGH-PRESSURE SWITCH (psig)												
Cutout	650			650			650			650		
Reset (Auto.)	500			500			500			500		
MIXED-AIR FILTERS												
Quantity ... Size (in.) Standard	10 ... 20 x 24 x 2			10 ... 20 x 24 x 2			10 ... 20 x 24 x 2			10 ... 20 x 24 x 2		
Pleated	5 ... 20 x 20 x 4			5 ... 20 x 20 x 4			5 ... 20 x 20 x 4			5 ... 20 x 20 x 4		
	5 ... 20 x 24 x 4			5 ... 20 x 24 x 4			5 ... 20 x 24 x 4			5 ... 20 x 24 x 4		
OUTDOOR-AIR FILTERS												
Quantity...Size (in.)	8...16 x 25 x 2 4...20 x 25 x 2											
POWER EXHAUST	Direct Drive, Single-Phase Motors (Factory-Wired for High Speed Operation), Forward-Curved Fan Wheels with Backdraft Dampers on Each Fan Housing											
Motor, Quantity...Hp	4...1											
Fan, Diameter...Width (in.)	11 x 10											

LEGEND

Al — Aluminum
Cu — Copper
MCHX — Microchannel Heat Exchanger
RTPF — Round Tube Plate Fin

* Sizes 020 to 027: Circuit 1 uses the lower portion of condenser coil, Circuit 2 uses the upper portion. Sizes 030 and 035: Circuit 1 uses the upper portion of condenser coil, Circuit 2 uses the lower portion. Sizes 040 and 050: Circuit 1 uses the left condenser coil, Circuit 2 the right. Size 060: Circuit A uses the two MCHX coils near the bulkhead, Circuit B uses the two MCHX coils near the control box.

† Rollout switch is manual reset.

Physical data — 48A units (cont)

UNIT 48A	035			040			050		
NOMINAL CAPACITY (tons)	35			40			50		
BASE UNIT OPERATING WEIGHT (lb)	See Applied RTU Builder								
COMPRESSOR									
Quantity ... Type (Ckt 1/Ckt 2)	2 ... ZP67/2...ZP104			2...ZP104/2...ZP104			2…ZP122/2…ZP122		
Number of Refrigerant Circuits	2			2			2		
Oil	Precharged			Precharged			Precharged		
REFRIGERANT	R-410A								
Operating Charge (lb), Ckt 1/Ckt 2									
RTPF Coils	28.7 / 44.0			44.0 / 44.0			56.3 / 57.3		
MCHX Coils	17.9 / 26.0			23.0 / 23.5			27.0 / 28.0		
MCHX Coils with Humidi-MiZer	17.9 / 31.5			23.0 / 30.5			26.5 / 34.5		
MCHX CONDENSER*									
Quantity	1			2			2		
Total Face Area (sq ft)	32.9			65.8			65.8		
RTPF CONDENSER									
Quantity	1			2			2		
Rows...Fins/in.	4...15			3...15			4...15		
Total Face Area (sq ft)	33.3			66.7			66.7		
CONDENSER FAN	Propeller Type								
Nominal Cfm	19,500			32,000			35,000		
Quantity... Diameter (in.)	2 ... 30			4 ... 30			4 ... 30		
Motor Hp	1			1			1		
EVAPORATOR COIL	Cross-Hatched Copper Tubes, Aluminum Plate Fins with Intertwined Circuits								
Tube Size (in.)	1/2			1/2			1/2		
Rows ... Fins/in.	6 ... 16			4 ... 17			6 ... 16		
Total Face Area (sq ft)	31.3			31.3			31.3		
HUMIDI-MIZER COIL									
Coil Construction	E-Coated Aluminum Novation® Heat Exchanger with Microchannel Coil Technology								
Quantity	1			1			1		
Face Area (sq ft)	14.4			14.4			14.4		
EVAPORATOR FAN	Centrifugal Type								
Quantity ... Size (in.)	2 ... 20 X 15			2 ... 20 X 15			2 ... 20 X 15		
Type Drive	Belt			Belt			Belt		
Nominal Cfm	14,000			16,000			18,000		
Motor Hp	15	20	25	15	20	25	20	25	30
Motor Frame Size	254T	256T	284T	254T	256T	284T	256T	284T	286T
Motor Bearing Type	Ball			Ball			Ball		
Maximum Allowable Rpm	1300			1300			1300		
Motor Pulley Pitch Diameter (in.)	5.1	5.7	6.2	5.3	5.7	7.5	5.7	6.2	6.7
Nominal Motor Shaft Diameter (in.)	1-5/8	1-5/8	1-7/8	1-5/8	1-5/8	1-7/8	1-5/8	1-7/8	1-7/8
Fan Pulley Pitch Diameter (in.)	8.7	8.7	8.7	9.5	9.5	11.1	9.5	9.5	9.5
Nominal Fan Shaft Diameter (in.)	1-15/16			1-15/16			1-15/16		
Belt Quantity	2	2	2	2	2	2	2	2	2
Belt Type	5VX500	5VX530	5VX550	5VX530	5VX550	5VX590	5VX550	5VX570	5VX570
Belt Length (in.)	50	53	55	53	55	59	55	57	57
Pulley Center Line Distance (in.)	15.0-17.9	15.0-17.9	15.0-17.9	15.0-17.9	15.0-17.9	14.6-17.6	15.0-17.9	14.6-17.6	14.6-17.6
Factory Speed Setting (rpm)	1025	1147	1247	976	1050	1182	1050	1142	1234
FURNACE SECTION									
Supply Line Pressure Range	5.0-in. wg min/13.5-in. wg max.								
Rollout Switch Cutout Temp (F)†	225			225			225		
Burner Orifice Diameter (in ...drill size)									
Natural Gas (Std)	.111 ... 34 (low)/.120 ... 31 (high)			.120 ... 31			.120 ... 31		
Liquid Propane (Alt)	.089 ... 43			.096 ... 41			.096 ... 41		
Thermostat Heat Anticipator Setting									
Stage 1 (amps)	0.1			0.24			0.1		
Stage 2 (amps)	0.1			0.13			0.1		
Gas Input (Btuh) Stage 1 (Low Heat/High Heat)	262,500/600,000			300,000/600,000			300,000/600,000		
Stage 2 (Low Heat/High Heat)	350,000/800,000			400,000/800,000			400,000/800,000		
Efficiency (Steady State) (%)	81			81			81		
Temperature Rise Range	15-45/30-60			10-40/30-60			10-40/30-60		
Manifold Pressure (in. wg)									
Natural Gas (Std)	3.5			3.5			3.5		
Liquid Propane (Alt)	3.5			3.5			3.5		
Gas Valve Quantity	2			2			2		
HIGH-PRESSURE SWITCH (psig)									
Cutout	650			650			650		
Reset (Auto.)	500			500			500		
MIXED-AIR FILTERS									
Quantity ... Size (in.) Standard	10 ... 20 x 24 x 2			10 ... 20 x 24 x 2			10 ... 20 x 24 x 2		
Pleated	5 ... 20 x 20 x 4 5 ... 20 x 24 x 4			5 ... 20 x 20 x 4 5 ... 20 x 24 x 4			5 ... 20 x 20 x 4 5 ... 20 x 24 x 4		
OUTDOOR-AIR FILTERS									
Quantity...Size (in.)	8...16 x 25 x 2 4...20 x 25 x 2			8...16 x 25 x 2 4...20 x 25 x 2			8...16 x 25 x 2 4...20 x 25 x 2		
POWER EXHAUST	Direct Drive, Single-Phase Motors (Factory-Wired for High Speed Operation), Forward-Curved Fan Wheels with Backdraft Dampers on Each Fan Housing								
Motor, Quantity...Hp	4...1			4...1			4...1		
Fan, Diameter...Width (in.)	11 x 10			11 x 10			11 x 10		

LEGEND

Al — Aluminum
Cu — Copper
MCHX — Microchannel Heat Exchanger
RTPF — Round Tube Plate Fin

* Sizes 020 to 027: Circuit 1 uses the lower portion of condenser coil, Circuit 2 uses the upper portion. Sizes 030 and 035: Circuit 1 uses the upper portion of condenser coil, Circuit 2 uses the lower portion. Sizes 040 and 050: Circuit 1 uses the left condenser coil, Circuit 2 the right. Size 060: Circuit A uses the two MCHX coils near the bulkhead, Circuit B uses the two MCHX coils near the control box.

† Rollout switch is manual reset.

Physical data — 48A units (cont)

UNIT 48A	060 (Vertical)			060 (Horizontal)		
NOMINAL CAPACITY (tons)	60			60		
BASE UNIT OPERATING WEIGHT (lb)	See Applied RTU Builder					
COMPRESSOR						
Quantity ... Type (Ckt 1/Ckt 2)	2…ZP154/2…ZP154			2…ZP154/2…ZP154		
Number of Refrigerant Circuits	2			2		
Oil	Precharged			Precharged		
REFRIGERANT	R-410A					
Operating Charge (lb), Ckt 1/Ckt 2						
RTPF Coils	78.5 / 82.0			78.5 / 82.0		
MCHX Coils	36.3 / 37.8			36.3 / 37.8		
MCHX Coils with Humidi-MiZer	36.3 / 47.6			36.3 / 47.6		
MCHX CONDENSER*						
Quantity	4			4		
Total Face Area (sq ft)	105.2			105.2		
RTPF CONDENSER						
Quantity	2			2		
Rows...Fins/in.	6...30			6...30		
Total Face Area (sq ft)	100.0			100.0		
CONDENSER FAN	Propeller Type					
Nominal Cfm	40,000			40,000		
Quantity... Diameter (in.)	4...30.5(MCHX), 6...30(RTPF)			4...30.5(MCHX), 6...30(RTPF)		
Motor Hp	1			1		
EVAPORATOR COIL	Cross-Hatched Copper Tubes, Aluminum Plate Fins with Intertwined Circuits					
Tube Size (in.)	1/2			1/2		
Rows ... Fins/in.	4...17			4...17		
Total Face Area (sq ft)	48.1			48.1		
HUMIDI-MIZER COIL						
Coil Construction	E-Coated Aluminum Novation® Heat Exchanger with Microchannel Coil Technology					
Quantity	1			1		
Face Area (sq ft)	14.4			14.1		
EVAPORATOR FAN	Centrifugal Type					
Quantity ... Size (in.)	3 ... 20 X 15			3 ... 20 X 15		
Type Drive	Belt			Belt		
Nominal Cfm	24,000			24,000		
Motor Hp	25	30	40	25	30	40
Motor Frame Size	284T	286T	324T	284T	286T	324T
Motor Bearing Type	Ball			Ball		
Maximum Allowable Rpm	1200			1200		
Motor Pulley Pitch Diameter (in.)	5.3	5.9	6.5	5.3	5.9	6.5
Nominal Motor Shaft Diameter (in.)	1-7/8	1-7/8	2-1/8	1-7/8	1-7/8	2-1/8
Fan Pulley Pitch Diameter (in.)	9.1	9.5	9.5	9.1	9.5	9.5
Nominal Fan Shaft Diameter (in.)	1-15/16			1-15/16		
Belt Quantity	3	3	3	3	3	3
Belt Type	5VX530	5VX550	5VX570	5VX530	5VX550	5VX570
Belt Length (in.)	53	55	57	53	55	57
Pulley Center Line Distance (in.)	15.2-17.5	14.7-17.2	14.2-17.0	15.2-17.5	14.7-17.2	14.2-17.0
Factory Speed Setting (rpm)	1019	1087	1197	1019	1087	1197
FURNACE SECTION						
Supply Line Pressure Range	5.0-in. wg min/13.5-in. wg max.					
Rollout Switch Cutout Temp (F)†	225			225		
Burner Orifice Diameter (in ...drill size)						
Natural Gas (Std)	.120...31			.120 ... 31 (low)/.1065 ... 36 (high)		
Liquid Propane (Alt)	.096...41			.096 ... 41 (low)/.0860 ... 44 (high)		
Thermostat Heat Anticipator Setting						
Stage 1 (amps)	0.1			0.1		
Stage 2 (amps)	0.1			0.1		
Gas Input (Btuh) Stage 1 (Low Heat/High Heat)	582,000/873,000			582,000/731,000		
Stage 2 (Low Heat/High Heat)	776,000/1,164,000			776,000/975,000		
Efficiency (Steady State) (%)	81			81		
Temperature Rise Range	15-45/30-60			15-45/30-60		
Manifold Pressure (in. wg)						
Natural Gas (Std)	3.3			3.3		
Liquid Propane (Alt)	3.3			3.3		
Gas Valve Quantity	3			3		
HIGH-PRESSURE SWITCH (psig)						
Cutout	650			650		
Reset (Auto.)	500			500		
MIXED-AIR FILTERS						
Quantity ... Size (in.) Standard	16...20 x 24 x 2			16...20 x 24 x 2		
Pleated	8...20 x 20 x 4			8...20 x 20 x 4		
	8...20 x 24 x 4			8...20 x 24 x 4		
OUTDOOR-AIR FILTERS						
Quantity...Size (in.)	12...16 x 25 x 2			12...16 x 25 x 2		
	6...20 x 25 x 2			6...20 x 25 x 2		
POWER EXHAUST	Direct Drive, Single-Phase Motors (Factory-Wired for High Speed Operation), Forward-Curved Fan Wheels with Backdraft Dampers on Each Fan Housing					
Motor, Quantity...Hp	6...1			6...1		
Fan, Diameter...Width (in.)	11 x 10			11 x 10		

LEGEND

Al — Aluminum
Cu — Copper
MCHX — Microchannel Heat Exchanger
RTPF — Round Tube Plate Fin

* Sizes 020 to 027: Circuit 1 uses the lower portion of condenser coil, Circuit 2 uses the upper portion. Sizes 030 and 035: Circuit 1 uses the upper portion of condenser coil, Circuit 2 uses the lower portion. Sizes 040 and 050: Circuit 1 uses the left condenser coil, Circuit 2 the right. Size 060: Circuit A uses the two MCHX coils near the bulkhead, Circuit B uses the two MCHX coils near the control box.

† Rollout switch is manual reset.

Physical data — 50A units

UNIT 50A	020			025			027			030		
NOMINAL CAPACITY (tons)	20			25			27			30		
BASE UNIT OPERATING WEIGHT (lb)	See Applied RTU Builder											
COMPRESSOR												
Quantity ... Type (Ckt 1/Ckt 2)	2 ... ZP67/1…ZP91			2 ... ZP91/1…ZP91			2 ... ZP91/1…ZP91			2…ZP72, 2…ZP72		
Number of Refrigerant Circuits	2			2			2			2		
Oil	Precharged			Precharged			Precharged			Precharged		
REFRIGERANT	R-410A											
Operating Charge (lb), Ckt 1/Ckt 2												
RTPF Coils	25.8/18.6			30.2/15.2			32.8/16.5			30.5/34.3		
MCHX Coils	14.5/11.6			16.5/11.0			16.5/11.0			15.1/15.3		
MCHX Coils with Humidi-MiZer	21.7/11.6			23.7/11.0			23.7/11.0			15.1/22.5		
MCHX CONDENSER*												
Quantity	1			1			1			1		
Total Face Area (sq ft)	32.9			32.9			32.9			32.9		
RTPF CONDENSER												
Quantity	1			1			1			1		
Rows...Fins/in.	2...15			3...15			3...15			4...15		
Total Face Area (sq ft)	33.3			33.3			33.3			33.3		
CONDENSER FAN	Propeller Type											
Nominal Cfm	19,500			19,500			19,500			19,500		
Quantity... Diameter (in.)	2 ... 30			2 ... 30			2 ... 30			2 ... 30		
Motor Hp	1			1			1			1		
EVAPORATOR COIL	Cross-Hatched Copper Tubes, Aluminum Plate Fins with Intertwined Circuits											
Tube Size (in.)	3/8			3/8			3/8			3/8		
Rows ... Fins/in.	3 ... 15			4 ... 14			4 ... 15			4 ... 15		
Total Face Area (sq ft)	31.7			31.7			31.7			31.7		
HUMIDI-MIZER COIL												
Coil Construction	E-Coated Aluminum Novation® Heat Exchanger with Microchannel Coil Technology											
Quantity	1			1			1			1		
Face Area (sq ft)	14.4			14.4			14.4			14.4		
EVAPORATOR FAN	Centrifugal Type											
Quantity ... Size (in.)	2 ... 20 X 15			2 ... 20 X 15			2 ... 20 X 15			2 ... 20 X 15		
Type Drive	Belt			Belt			Belt			Belt		
Nominal Cfm	8,000			10,000			11,000			12,000		
Motor Hp	5	10	15	5	10	15	10	15	20	10	15	20
Motor Frame Size	184T	215T	254T	184T	215T	254T	215T	254T	256T	215T	254T	256T
Motor Bearing Type	Ball			Ball			Ball			Ball		
Maximum Allowable Rpm	1200			1200			1200			1200		
Motor Pulley Pitch Diameter	4.8	4.4	5.7	5.2	6.1	5.5	4.4	4.9	5.9	4.4	5.7	5.9
Nominal Motor Shaft Diameter (in.)	1-1/8	1-3/8	1-5/8	1-1/8	1-3/8	1-5/8	1-3/8	1-5/8	1-5/8	1-3/8	1-5/8	1-5/8
Fan Pulley Pitch Diameter (in.)	12.4	8.6	9.1	12.4	11.1	8.7	9.4	8.1	8.7	9.0	9.1	8.7
Nominal Fan Shaft Diameter (in.)	1-15/16			1-15/16			1-15/16			1-15/16		
Belt Quantity	1	2	2	1	1	2	2	2	2	2	2	2
Belt Type	BX56	BX50	5VX530	BX56	5VX570	5VX530	BX50	5VX500	5VX530	BX50	5VX530	5VX530
Belt Length (in.)	56	63	53	56	57	53	50	50	53	50	53	53
Pulley Center Line Distance (in.)	16.0-18.7	15.6-18.4	15.0-17.9	15.6-18.4	15.6-18.4	15.0-17.9	15.6-18.4	15.0-17.9	15.0-17.9	15.6-18.4	15.0-17.9	15.0-17.9
Factory Speed Setting (rpm)	717	924	1096	773	962	1106	848	1059	1187	856	1096	1187
HIGH-PRESSURE SWITCH (psig)												
Cutout	650			650			650			650		
Reset (Auto.)	500			500			500			500		
MIXED-AIR FILTERS												
Quantity ... Size (in.) Standard	10 ... 20 x 24 x 2			10 ... 20 x 24 x 2			10 ... 20 x 24 x 2			10 ... 20 x 24 x 2		
Pleated	5 ... 20 x 20 x 4 5 ... 20 x 24 x 4			5 ... 20 x 20 x 4 5 ... 20 x 24 x 4			5 ... 20 x 20 x 4 5 ... 20 x 24 x 4			5 ... 20 x 20 x 4 5 ... 20 x 24 x 4		
OUTDOOR-AIR FILTERS												
Quantity...Size (in.)	8...16 x 25 x 2 4...20 x 25 x 2											
POWER EXHAUST	Direct Drive, Single-Phase Motors (Factory-Wired for High Speed Operation), Forward-Curved Fan Wheels with Backdraft Dampers on Each Fan Housing											
Motor, Quantity...Hp	4...1											
Fan, Diameter...Width (in.)	11 x 10											

LEGEND

Al — Aluminum
Cu — Copper
MCHX — Microchannel Heat Exchanger
RTPF — Round Tube Plate Fin

* Sizes 020 to 027: Circuit 1 uses the lower portion of condenser coil, Circuit 2 uses the upper portion. Sizes 030 and 035: Circuit 1 uses the upper portion of condenser coil, Circuit 2 uses the lower portion. Sizes 040 and 050: Circuit 1 uses the left condenser coil, Circuit 2 the right. Size 060: Circuit A uses the two MCHX coils near the bulkhead, Circuit B uses the two MCHX coils near the control box.

† Rollout switch is manual reset.

Physical data — 50A units (cont)

UNIT 50A	035			040			050			060		
NOMINAL CAPACITY (tons)	35			40			50			60		
BASE UNIT OPERATING WEIGHT (lb)	See Applied RTU Builder											
COMPRESSOR												
Quantity ... Type (Ckt 1/Ckt 2)	2 ... ZP67/2…ZP104			2…ZP104/2…ZP104			2…ZP122/2…ZP122			2…ZP154/2…ZP154		
Number of Refrigerant Circuits	2			2			2			2		
Oil	Precharged			Precharged			Precharged			Precharged		
REFRIGERANT	R-410A											
Operating Charge (lb), Ckt 1/Ckt 2												
RTPF Coils	28.7 / 44.0			44.0 / 44.0			56.3 / 57.3			78.5 / 82.0		
MCHX Coils	17.9 / 26.0			23.0 / 23.5			27.0 / 28.0			36.3 / 37.8		
MCHX Coils with Humidi-MiZer	17.9 / 31.5			23.0 / 30.5			26.5 / 34.5			36.3 / 47.6		
MCHX CONDENSER*												
Quantity	1			2			2			4		
Total Face Area (sq ft)	32.9			65.8			65.8			105.2		
RTPF CONDENSER												
Quantity	1			2			2			2		
Rows...Fins/in	4...15			3...15			4...15			6...30		
Total Face Area (sq ft)	33.3			66.7			66.7			100.0		
CONDENSER FAN	Propeller Type											
Nominal Cfm	19,500			32,000			35,000			40,000		
Quantity... Diameter (in.)	2 ... 30			4 ... 30			4 ... 30			4...30.5(MCHX), 6...30(RTPF)		
Motor Hp	1			1			1			1		
EVAPORATOR COIL	Cross-Hatched Copper Tubes, Aluminum Plate Fins with Intertwined Circuits											
Tube Size (in.)	1/2			1/2			1/2			1/2		
Rows ... Fins/in.	6 ... 16			4 ... 17			6 ... 16			4...17		
Total Face Area (sq ft)	31.3			31.3			31.3			48.1		
HUMIDI-MIZER COIL												
Coil Construction	E-Coated Aluminum Novation® Heat Exchanger with Microchannel Coil Technology											
Quantity	1			1			1			1		
Face Area (sq ft)	14.4			14.4			14.4			14.4		
EVAPORATOR FAN	Centrifugal Type											
Quantity ... Size (in.)	2 ... 20 X 15			2 ... 20 X 15			2 ... 20 X 15			3 ... 20 X 15		
Type Drive	Belt			Belt			Belt			Belt		
Nominal Cfm	14,000			16,000			18,000			24,000		
Motor Hp	15	20	25	15	20	25	20	25	30	25	30	40
Motor Frame Size	254T	256T	284T	254T	256T	284T	256T	284T	286T	284T	286T	324T
Motor Bearing Type	Ball			Ball			Ball			Ball		
Maximum Allowable Rpm	1300			1300			1300			1200		
Motor Pulley Pitch Diameter	5.1	5.7	6.2	5.3	5.7	7.5	5.7	6.2	6.7	5.3	5.9	6.5
Nominal Motor Shaft Diameter (in.)	1-5/8	1-5/8	1-7/8	1-5/8	1-5/8	1-7/8	1-5/8	1-7/8	1-7/8	1-7/8	1-7/8	2-1/8
Fan Pulley Pitch Diameter (in.)	8.7	8.7	8.7	9.5	9.5	11.1	9.5	9.5	9.5	9.1	9.5	9.5
Nominal Fan Shaft Diameter (in.)	1-15/16			1-15/16			1-15/16			1-15/16		
Belt Quantity	2	2	2	2	2	2	2	2	2	3	3	3
Belt Type	5VX500	5VX530	5VX550	5VX530	5VX550	5VX590	5VX550	5VX570	5VX570	5VX530	5VX550	5VX570
Belt Length (in.)	50	53	55	53	55	59	55	57	57	53	55	57
Pulley Center Line Distance (in.)	15.0-17.9	15.0-17.9	15.0-17.9	15.0-17.9	15.0-17.9	14.6-17.6	15.0-17.9	14.6-17.6	14.6-17.6	15.2-17.5	14.7-17.2	14.2-17.0
Factory Speed Setting (rpm)	1025	1147	1247	976	1050	1182	1050	1142	1234	1019	1087	1197
HIGH-PRESSURE SWITCH (psig)												
Cutout	650			650			650			650		
Reset (Auto.)	500			500			500			500		
MIXED-AIR FILTERS												
Quantity ... Size (in.) Standard	10 ... 20 x 24 x 2			10 ... 20 x 24 x 2			10 ... 20 x 24 x 2			16...20 x 24 x 2		
Pleated	5 ... 20 x 20 x 4 5 ... 20 x 24 x 4			5 ... 20 x 20 x 4 5 ... 20 x 24 x 4			5 ... 20 x 20 x 4 5 ... 20 x 24 x 4			8...20 x 20 x 4 8...20 x 24 x 4		
OUTDOOR-AIR FILTERS												
Quantity...Size (in.)	8...16 x 25 x 2 4...20 x 25 x 2			8...16 x 25 x 2 4...20 x 25 x 2			8...16 x 25 x 2 4...20 x 25 x 2			12...16 x 25 x 2 6...20 x 25 x 2		
POWER EXHAUST	Direct Drive, Single-Phase Motors (Factory-Wired for High Speed Operation), Forward-Curved Fan Wheels with Backdraft Dampers on Each Fan Housing											
Motor, Quantity...Hp	4...1			4...1			4...1			6...1		
Fan, Diameter...Width (in.)	11 x 10			11 x 10			11 x 10			11 x 10		

LEGEND

Al — Aluminum
Cu — Copper
MCHX — Microchannel Heat Exchanger
RTPF — Round Tube Plate Fin

* Sizes 020 to 027: Circuit 1 uses the lower portion of condenser coil, Circuit 2 uses the upper portion. Sizes 030 and 035: Circuit 1 uses the upper portion of condenser coil, Circuit 2 uses the lower portion. Sizes 040 and 050: Circuit 1 uses the left condenser coil, Circuit 2 the right. Size 060: Circuit A uses the two MCHX coils near the bulkhead, Circuit B uses the two MCHX coils near the control box.

† Rollout switch is manual reset.

Options and accessories

ITEM	FACTORY-INSTALLED OPTIONS				FIELD-INSTALLED ACCESSORIES			
	A2,A6	A3,A7	A4,A8	A5,A9	A2,A6	A3,A7	A4,A8	A5,A9
GAS HEAT OPTIONS (48A Only)								
Low Gas Heat - Aluminized	X	X	X	X				
High Gas Heat - Aluminized	X	X	X	X				
Low Gas Heat - Stainless Steel	X	X	X	X				
High Gas Heat - Stainless Steel	X	X	X	X				
Staged Gas Heat - Low - Stainless Steel	X	X	X	X				
Staged Gas Heat - High - Stainless Steel	X	X	X	X				
LP Conversion Kit					X	X	X	X
ELECTRIC HEAT (50A Only)								
Low Electric Heat	X	X	X	X				
High Electric Heat	X	X	X	X				
INDOOR AIR QUALITY								
2-inch Filters	X	X	X	X				
4-inch Filters	X	X	X	X				
Double Wall in the Airstream (Special Order)	X	X	X	X				
ECONOMIZER								
Manual Outside Air Self-Closing Damper	X	X	X	X				
Modulating Ultra Low-Leak Economizer	X	X	X	X				
Outdoor or Return Humidity Sensor (Enthalpy)					X	X	X	X
EXHAUST AIR CONTROL								
Barometric Relief	X	X			X	X	X	X
Non-Modulating Power Exhaust	X				X	X	X	X
Staged Power Exhaust	X	X			X	X	X	X
Building Pressure Control Board (ECB2)					X		X	
Building Pressure Control Sensor					X	X	X	X
CONDENSER AND EVAPORATOR COIL OPTIONS								
Al/Cu Condenser and Evaporator	X	X	X	X				
Al/Cu Pre-Coat Condenser	X	X	X	X				
Al/Cu E-Coat Evaporator and/or Condenser	X	X	X	X				
Cu/Cu Condenser and Al/Cu Evaporator	X	X	X	X				
MCHX Condenser and Al/Cu Evaporator	X	X	X	X				
E-Coat MCHX Condenser and Al/Cu Evaporator	X	X	X	X				
E-Coat MCHX Condenser and Al/Cu E-Coat Evaporator	X	X	X	X				
Variable Capacity Compressor (Lead Circuit)	X	X	X	X				
Hot Gas Bypass - Circuit A (includes ECB2)	X	X	X	X				
Condenser Coil Hail Guard Assembly					X	X	X	X
Low Sound Condenser Fan	X	X	X	X				
Low Ambient Control	X	X	X	X				
Greenspeed® Intelligence	X	X	X	X				
Humidi-MiZer® Adaptive Dehumidification System	X	X	X	X				
CONTROLS								
Controls Expansion Module (CEM)	X	X	X	X	X	X	X	X
BACnet[a] Communications	X	X	X	X				
System Pilot™ Interface					X	X	X	X
Touch Pilot™ Interface					X	X	X	X
Navigator™ Display					X	X	X	X
Return Air CO_2 Sensor	X	X	X	X	X	X	X	X
CO_2 Space Sensor					X	X	X	X
CO_2 Aspirator Box					X	X	X	X
Return Air Smoke Detector	X	X	X	X				
Filter Switch	X	X	X	X	X	X	X	X
Fan Status Switch (requires CEM)					X	X	X	X
T55 Thermostat					X	X	X	X
T56 Thermostat					X	X	X	X
ZS Communicating Sensor (with BACnet)					X	X	X	X
Space Temperature Sensor with CO_2 Override					X	X	X	X
Space Temperature Sensor Setpoint and CO_2 Override					X	X	X	X
Two-Stage Heat/Cool Thermostats					X		X	
Modbus[b] Carrier Translator					X	X	X	X
LonWorks[c] Carrier Translator					X	X	X	X
POWER CIRCUIT								
GFI Convenience Outlet (powered)	X	X	X	X				
GFI Convenience Outlet (not powered)	X	X	X	X				
Power Terminal Block	X	X	X	X				
Non-Fused Disconnect	X	X	X	X				

ITEM	FACTORY-INSTALLED OPTIONS				FIELD-INSTALLED ACCESSORIES			
	A2,A6	A3,A7	A4,A8	A5,A9	A2,A6	A3,A7	A4,A8	A5,A9
INDOOR MOTOR OPTIONS								
Low HP	X	X	X	X				
Medium HP	X	X	X	X				
High HP	X	X	X	X				
Bypass on Indoor Fan Motor VFD	X	X	X	X				
PACKAGING								
Domestic	X	X	X	X				
Export	X	X	X	X				
MISCELLANEOUS OPTIONS								
Stainless Steel Drain Pan	X	X	X	X				
14-inch Roof Curb					X	X	X	X
Full-perimeter Roof Curb					X	X	X	X
Security Grille (60 Ton Unit Only)	X	X	X	X				
Extended Lube Lines	X	X	X	X				
Compressor Sound Blanket (factory installed with Greenspeed)					X	X	X	X
High SCCR (Special Order)	X	X	X	X				

NOTE(S):

a. Third-party trademarks and logos are the property of their respective owners.
b. Third-party trademarks and logos are the property of their respective owners.
c. Third-party trademarks and logos are the property of their respective owners.

Stainless steel gas heat exchanger

Units with two-stage gas heat are available with an optional factory-installed stainless steel gas heat exchanger for improved resistance to corrosion and longer service life. Units with staged gas heat are standard with stainless steel heat exchanger.

Stainless steel gas heat exchangers are recommended for applications with low mixed air temperature operation.

Staged (multi-stage) gas heat

The staged gas heat factory-installed option adds the capability to control the heat output between multiple, discrete output capacities to allow for improved supply air temperature control during heating operation or during supply air tempering operation. Staged gas heat can also be used for reheat operation when using the mechanical cooling system for dehumidification without Humidi-MiZer (if allowed by code).

The staged gas heating system employs multiple heating sections. Each section is equipped with a two-stage gas valve. The gas valves are sequenced by a factory-installed staged gas controller (SGC), as required, to maintain the user-specified supply air set point. Up to 11 stages of heating control are available, based on quantity and heating capacity sizes of the individual heat exchanger sections provided in the base unit. The SGC provides Demand Heating control for the first stage (W1 or low-heat) heating mode. The heating capacity will always go to 100% for second stage (W2 or high-heat) operation.

Tempering supply air is desirable when rooftop units are operating in ventilation mode (economizer only operation) at low outdoor temperatures. At low outdoor temperatures, the mixed-air temperature (combination of return-from-space temperature and outdoor/ventilation air temperature) may become too low for the comfort of the occupants or for the terminal reheat systems. The tempering function adds incremental steps of heat capacity to raise the temperature of the mixed air up to levels suitable for direct admission into the occupied space or to levels consistent with reheat capabilities of the space terminals.

Staged gas heat is recommended for VAV applications, applications with low mixed air temperatures, tempering applications, or applications where overheating the space is a concern during heating operation.

Electric heat

50 series units are available with a factory-installed two-stage electric heater. The electric heater is single point power and is fed from the unit power feed. Electric heat is available for heating duty and cannot be used for dehumidification reheat or tempering operation.

Humidi-MiZer® adaptive dehumidification system

Carrier's Humidi-MiZer adaptive dehumidification system is an all-inclusive factory-installed option that can be ordered with the WeatherMaker® 48/50A rooftop unit. This system expands the envelope of operation of the A Series rooftop to provide unprecedented flexibility that will meet year-round comfort conditions.

The Humidi-MiZer adaptive dehumidification system has the industry's only dual dehumidification mode setting. The WeatherMaker rooftop, coupled with the Humidi-MiZer adaptive dehumidification system, is capable of modulating between normal design cooling mode, subcooling mode, and hot gas reheat mode.

The Humidi-MiZer system includes a factory-installed three-way reheat valve, modulating condenser and condenser bypass valves, a large face area, e-coated Humidi-MiZer coil, CEM module, and a factory-installed return air relative humidity sensor. The Humidi-MiZer system control is integrated into *Comfort*Link.

Humidi-MiZer is recommended for single zone applications where a dedicated dehumidification cycle is required. Humidi-MiZer cannot be field installed.

Variable capacity (digital) scroll compressor

In air conditioning applications, the load may vary significantly, requiring a means to vary the system capacity for optimal performance and control.

The A Series large rooftop units with optional factory-installed lead circuit variable capacity scroll compression provide a highly efficient means of capacity control using scroll compressors. The digital compressor technology provides smooth, vibration-free operation by axially unloading the compliant scrolls.

By varying the amount of time that the scrolls are unloaded, the A Series unit can precisely match the system

capacity to the space load. This feature can reduce energy consumption, provide better dehumidification, reduce compressor cycling, and improve comfort in the space.

Variable capacity compressor is recommended for VAV applications or applications with a wide cooling load range.

Hot gas bypass

For applications without variable compressor where unloading is required, a factory-installed hot gas bypass (HGBP) valve is available. The hot gas bypass valve is installed on the lead circuit and can operate at the lowest stage of capacity to reduce compressor output for additional unloading at low load conditions.

HGBP is recommended for low load applications without variable capacity compressor

Control expansion module (CEM)

The CEM is available as a factory-installed option or field-installed accessory and provides additional control inputs and outputs to facility control operation, including fire, smoke, and purge control modes, fan status switch, demand limiting, IAQ switch, OA IAQ sensor, SAT and SP reset, and dehumidification.

Phase monitor

A factory-installed phase monitor helps protect against phase reversal, phase loss, or voltage imbalance. Phase monitor is recommended for applications with poor power quality.

Return air smoke detector

A return air smoke detector can be ordered as factory installed or for field installation as an accessory. When smoke is detected, a signal is sent to the *Comfort*Link control.

Extended lube lines

This option provides nylon lines connected to the grease fittings for the far side bearings to allow easy greasing from the supply fan motor access panel. A grease access point for the far bearings is located near the near bearing.

Return air CO_2 sensor

A factory-installed or field-installed return air CO_2 sensor is available for applications requiring indoor air quality (IAQ) control to increase ventilation air or demand control ventilation (DVC) to decrease ventilation air for energy savings. The IAQ sensor is connected to the *Comfort*Link control and can be used with multiple IAQ functions within the control program.

Pre-coated Al/Cu condenser

A durable epoxy-phenolic coating provides condenser coil protection in mildly corrosive environments. The coating minimizes galvanic action between dissimilar metals. Coating is applied to the aluminum fin stock prior to the fin stamping process to create an inert barrier between the aluminum fin and copper tube.

Pre-coated condensers are recommended for mildly corrosive environments.

Novation® microchannel heat exchanger (MCHX) condenser

The Novation heat exchanger design with MCHX condenser coil is a robust, cost-effective alternative to traditional coil design for standard applications. MCHX coils are also sturdier than other coil types, making them easier to clean without causing damage to the coil.

Due to the compact, all-aluminum design, microchannel coils reduce overall unit operating weight. The streamlined MCHX coil also reduces refrigerant charge by up to 40%.

Microchannel coils are not recommended by Carrier for marine, coastal, or industrial environments, unless Carrier-approved coating is applied. Variable speed head pressure is required when using MCHX coils in applications requiring low ambient mechanical cooling. Contact application engineer when using MCHX condensers in low ambient mechanical cooling applications.

E-coated evaporator and/or condenser

A flexible epoxy polymer coating uniformly applied to all coil surfaces to provide full coil protection in mildly corrosive environments. Coating process shall ensure complete coil encapsulation of tubes, fins and headers.

When applying equipment in high outdoor air applications in mildly corrosive environments, coating all coils is recommended. E-coated coil is required when using MCHX coils in coastal or semi-corrosive applications.

Security grill (60 ton MCHX only)

A factory-installed metal grid security grill is available to restrict ingress into the condenser section of the unit. Security grills are recommended for applications where the unit is mounted near the ground or is otherwise easily accessible.

Stainless steel drain pan

A factory-installed stainless steel drain pan is available for applications requesting additional corrosion resistance from condensate.

BACnet communication option

Includes a factory-installed UPC Open control module that interfaces with *Comfort*Link and facilitates BACnet communication. The UPC controller also allows compatibility with Carrier ZS sensors, Carrier i-Vu control interfaces, and Carrier Open controllers. The UPC supports airside linkage when used with Carrier Open VAV or VVT air terminal controllers.

Low ambient control

The low ambient package includes condenser fan VFDs, for variable speed heat pressure operation by the unit *Comfort*Link control. Mechanical cooling down to –20°F is possible under certain operation conditions with low ambient control.

Low ambient is recommended in applications where low ambient cooling is required and an economizer is not present or not in use. Low ambient control is also recommended for units with Humidi-MiZer.

NOTE: On previous units with MotorMaster low ambient control, low ambient operation could be field installed. The current generation (revision 4) uses a new system for low ambient control, which cannot be field installed.

Low sound condenser fan

Select units are available with an optional low sound condenser fan assembly, which includes an AeroAcoustic™ composite condenser fan with a specially designed, low sound, extended shroud to reduce radiated sound. Low sound fans are standard on select 35 and 50 ton configurations.

Low sound condenser fans are recommended for any application that is sensitive to unit radiated sound.

Greenspeed® Intelligence

Greenspeed Intelligence is a special equipment and control configuration that maximizes unit part load efficiency, provides low ambient mechanical cooling operation down to –20°F, and reduces full load and part load radiated sound. The Greenspeed package includes a special *Comfort*Link configuration to optimize condenser fan speed operation for increased energy savings at part load conditions and provides low ambient operation. The Greenspeed package also includes condenser fan VFDs, low sound condenser fans, and compressor sound blankets.

Greenspeed is recommended for applications requiring energy savings, low ambient mechanical cooling operation, or low sound operation.

4 in. filter rack

This option includes a factory-installed 4 in. filter rack to allow the use of higher rating or lower pressure drop filters. The 4 in. filter rack option is available with factory-installed 4 in. MERV 8 filter. Accessory filters up to 4 in. MERV 13 are available for field installation.

The 4 in. rack is recommended for applications requiring MERV 8 filters or higher.

Plugged filter indicator

Available as a factory-installed option or field-installed accessory, the plugged filter indicator measures the pressure drop across the filter assembly and provides a signal to *Comfort*Link indicating that the filter is dirty, when the set pressure drop is exceeded.

Non-fused disconnect

This OSHA-compliant, factory-installed, safety switch allows a service technician to locally disconnect and secure power to the unit with the included lock point for lockout/tagout.

Powered convenience outlet

This option includes a factory-installed 15A, 115V GFCI covered outlet that is fed by a 115V transformer connected to the load side of the unit terminal block.

Non-powered convenience outlet

This option includes a factory-installed 15A, 115V GFCI covered outlet that is fed by a 115V transformer for field power connection.

Manual outdoor air damper

The factory-installed manual outdoor air damper provides provision for the introduction of small amounts of outdoor air for applications that don't require free cooling or IAQ control. The non-powered damper operates on gravity and is closed when the supply fan is off and opens to a field set position when the supply fan is on, due to the suction created from the supply fan.

Factory-installed ultra low leak economizer

For applications requiring free cooling, ventilation control, or IAQ control, a factory-installed ultra low leak economizer is available. The economizer uses ultra-low leak blades for tight sealing and a robust drive design for long life. Fault detection and diagnostic (FDD) and multiple free cooling and control methodologies, including integrated economizer and mechanical cooling, are possible with *Comfort*Link. The outdoor air hood and inlet screens are shipped knocked down for field installation.

Barometric relief damper

The factory-installed or field-installed barometric relief package is used in conjunction with the factory-installed economizer to provide building pressure relief during free cooling or IAQ operation when excess outdoor air is introduced to the building. The barometric relief damper is intended for use in low return static pressure applications, such as single story buildings.

When ordered as a factory-installed option, the barometric relief damper and relief hood ship inside the unit in the shipping position to reduce possible shipping damage. The relief hood must be tipped out and the relief assembly tipped up for final installation. For horizontal return applications, the barometric relief must be relocated from the factory-installed position or field installed as an accessory to the horizontal return duct.

Barometric relief is recommended for applications with economizer and very low return duct static pressures.

Non-modulating power exhaust

The factory-installed or field-installed non-modulating power exhaust systems is used for applications with economizer and a high return duct static pressure, such as multistory buildings. The non-modulating power exhaust provides up to two stages of operation based on economizer position and includes a barometric damper

When ordered as a factory-installed option, the non-modulating power exhaust and exhaust hood ship inside the unit in the shipping position to reduce possible shipping damage. The exhaust hood must be tipped out and the exhaust assembly tipped up for final installation. For horizontal return applications, the power exhaust must be relocated from the factory-installed position or field installed as an accessory to the horizontal return duct. The power exhaust power and wiring are tied back to the main unit, when field installing or relocating the power exhaust to the duct system.

The non-modulating power exhaust is recommended for applications with economizer and mild return duct static pressures.

Modulating power exhaust

The factory-installed or field-installed modulating power exhaust systems is used for applications with economizer that require space pressure control. The modulating power exhaust provides up to six stages of power exhaust operation based on building pressure as measured by the included building pressure transducer.

When ordered as a factory-installed option, the modulating power exhaust and exhaust hood ship inside the unit in the shipping position to reduce possible shipping damage. The exhaust hood must be tipped out and the exhaust assembly tipped up for final installation. For horizontal return applications, the power exhaust must be relocated from the factory-installed position or field installed as an accessory to the horizontal return duct. The power exhaust power and wiring are tied back to the main unit, when field installing or relocating the power exhaust to the duct system.

The modulating power exhaust is recommended for applications with economizer that require space pressure control.

High Capacity Power Exhaust (HCPE)

When the factory-installed non-modulating or modulating power exhaust can't meet the airflow or static requirements for the project, the high capacity power exhaust accessory is available. The HCPE can be powered from the

main unit power feed (single point) and includes a VFD driven power exhaust assembly that be controlled by *Comfort*Link based on economizer position or building pressure control for fully modulating operation. A field-installed modulating power exhaust conversion kit may be required for building pressure control. The HCPE is ordered as individual modules and up to two (20-50 ton) or three (60 ton) modules can be used at once.

For vertical applications, the HCPE can be installed in the exhaust/relief section of the unit. For horizontal return applications, the HCPE must be installed in the return duct.

Compressor sound blankets

These are available as a field-installed accessory or as part of the Greenspeed package as field installed. The sound blanket reduces the radiated sound from the compressor.

Double wall construction

The 0.5-in., R-4 fiberglass insulation on the top and side panels of the air handling section are covered by a galvanized liner to provide a fiber-free operation and wipe down capability.

The following additional items are available as accessories for select 48/50A models:

- Hail guard
- Propane heat conversion kit (48 series)
- Filter kits
- Roof curbs
- Space temperature, CO_2, or humidity sensors
- Navigator interface
- Modbus translator
- LonWorks translator
- Carrier ZS communicating sensors (units with BACnet communication option)
- i-Vu Equipment Touch (units with BACnet communication option)

The following options may be available as a special order:

- Horizontal return/vertical supply
- Double wall construction with Agion[1] coating
- Double wall bottom (for installations other than curbs)
- SCR electric heat
- Access door retainer
- UVC light fixtures
- TEFC supply fan motor
- Hot water coil
- Shaft grounding rings
- Condensate overflow switch
- Refrigerant relief valves
- Cu/Cu evaporator coil
- 65kA high short circuit current rating (SCCR)
- Configure for MicroMetl field-installed ERV
- Marine lights
- Dual point power
- Fused disconnect

1. Third-party trademarks and logos are the property of their respective owners.

Base unit dimensions 48/50A2,A3,A6,A7020-035

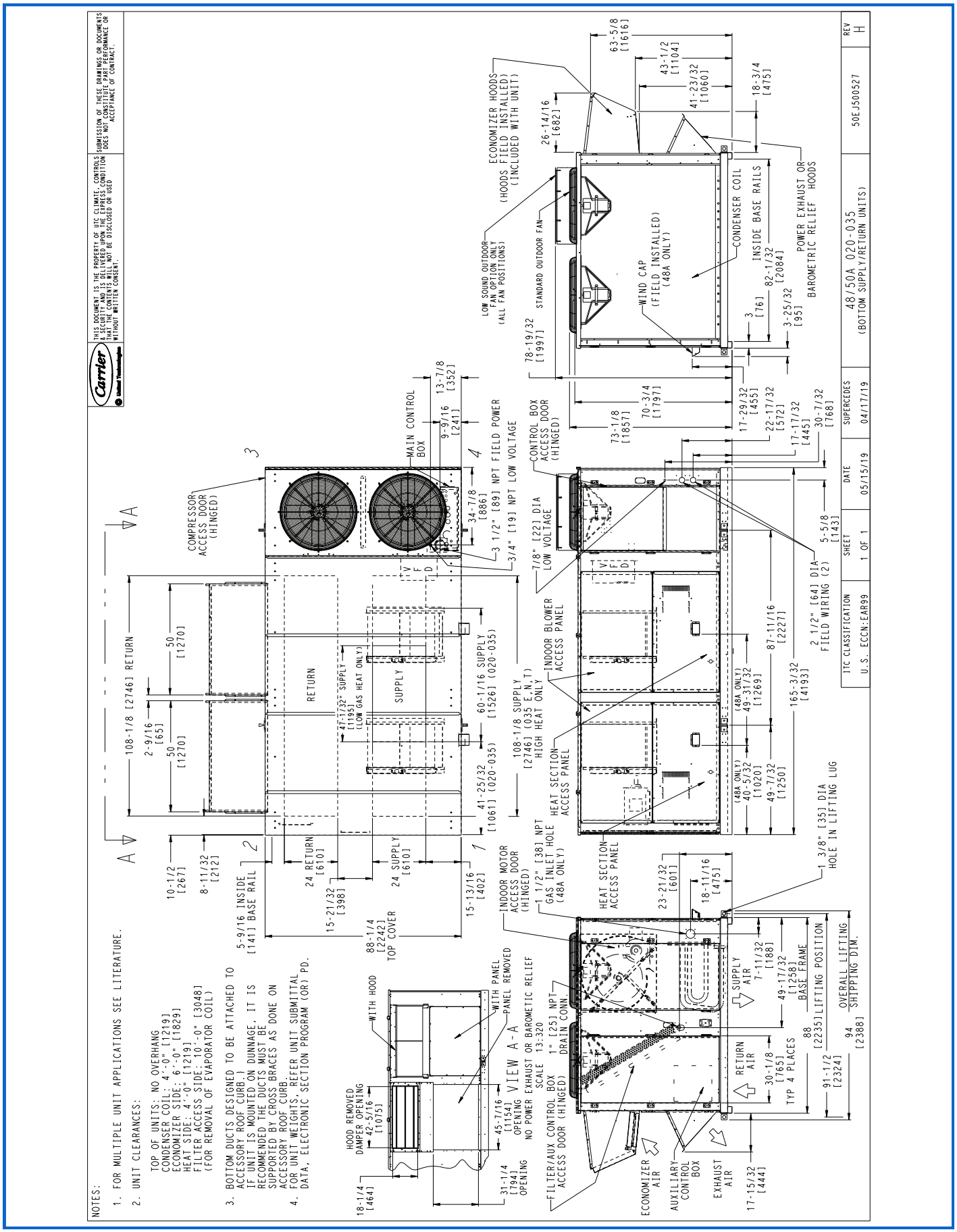

Base unit dimensions 48/50A2,A3,A6,A7040,050

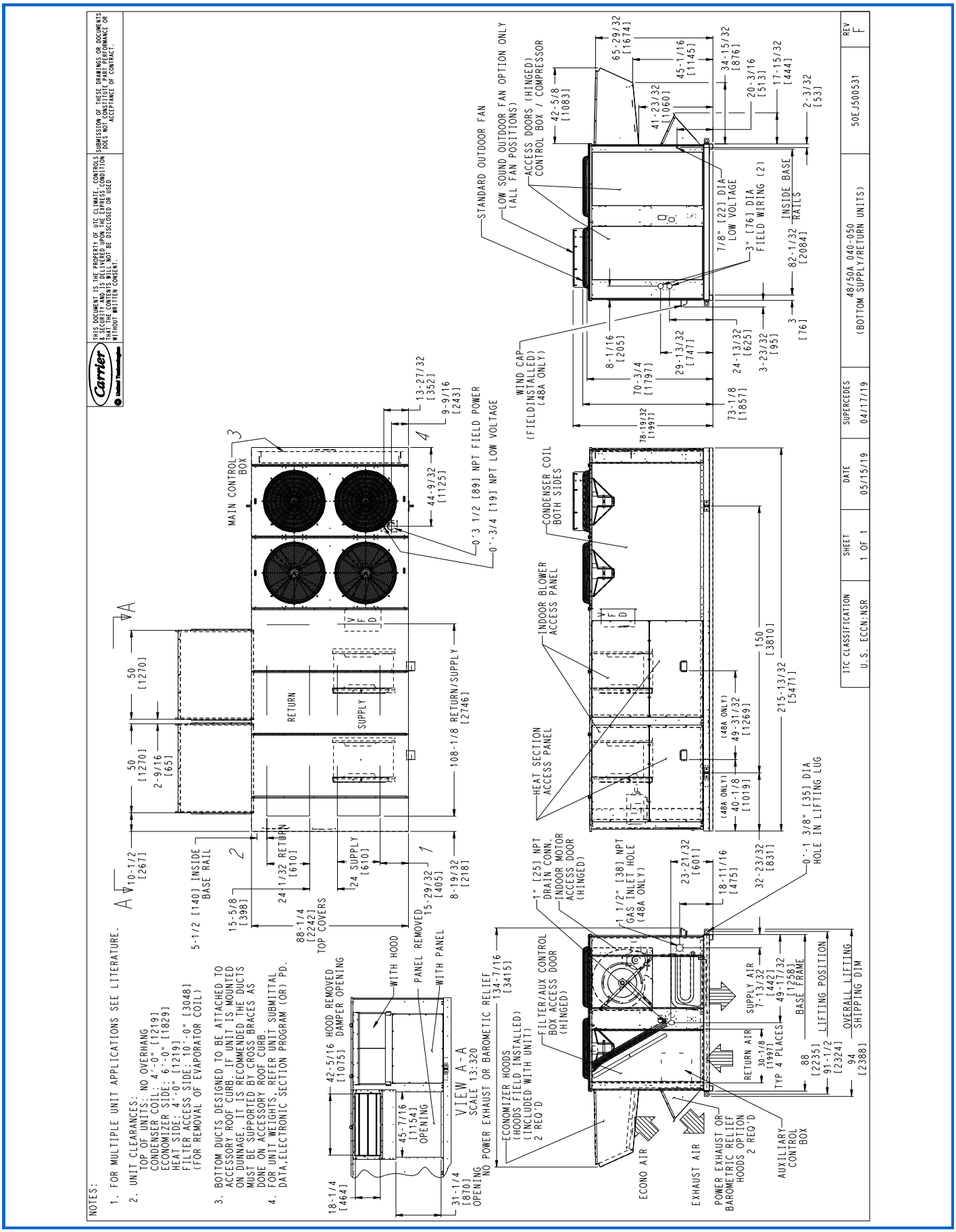

Base unit dimensions 48/50A2,A3,A6,A7060

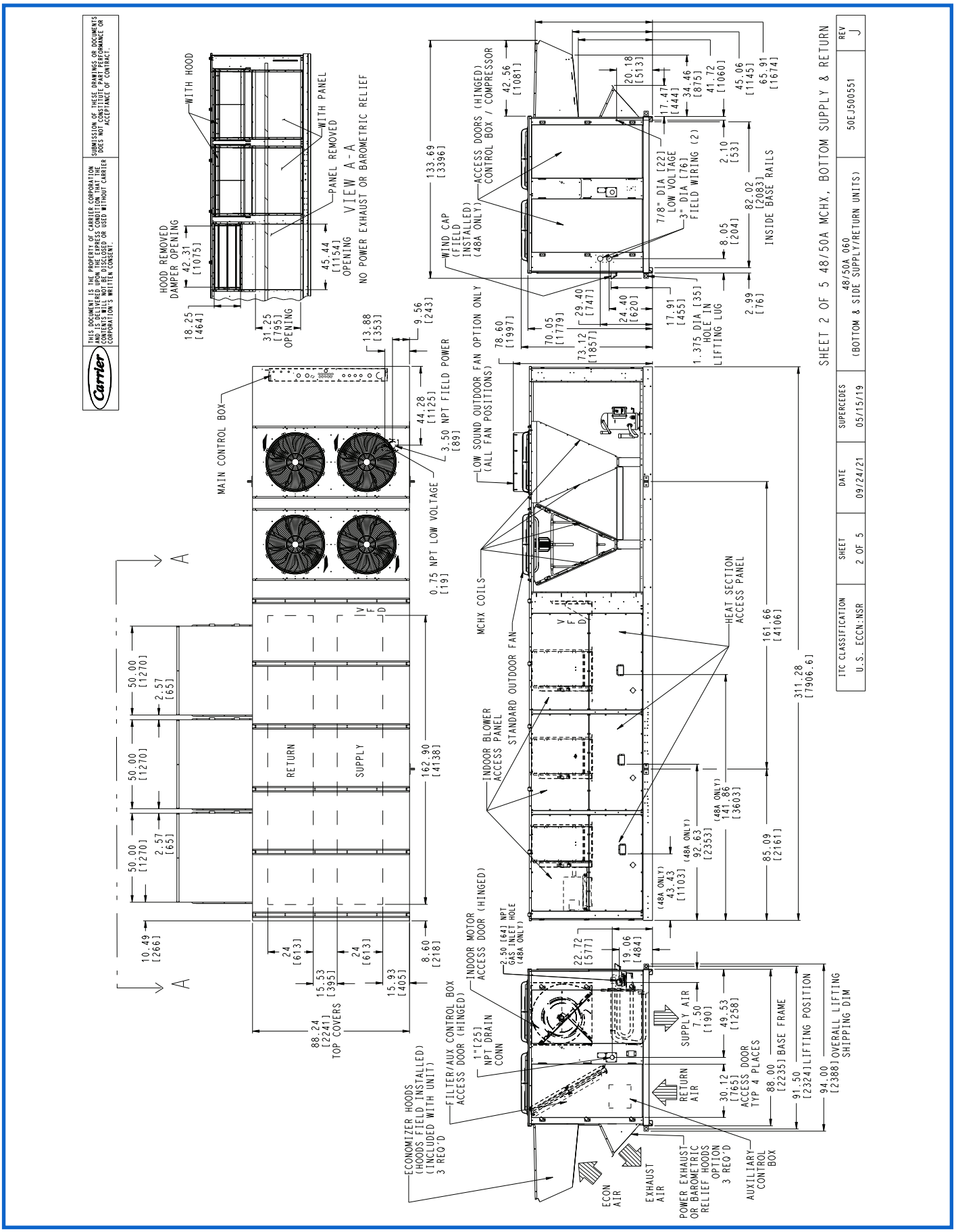

Base unit dimensions 48/50A2,A3,A6,A7060

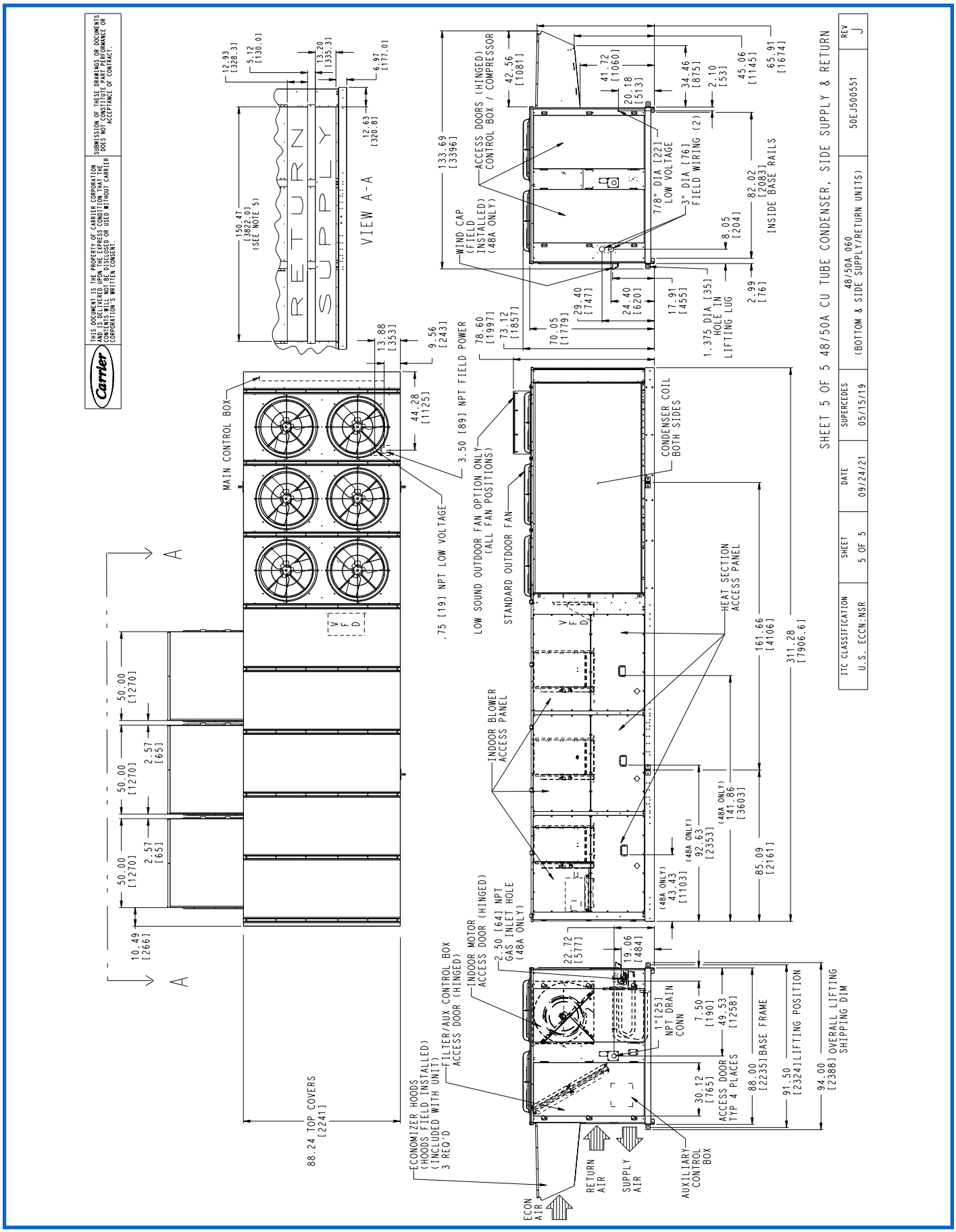

Base unit dimensions 48/50A4,A5,A8,A9020-035

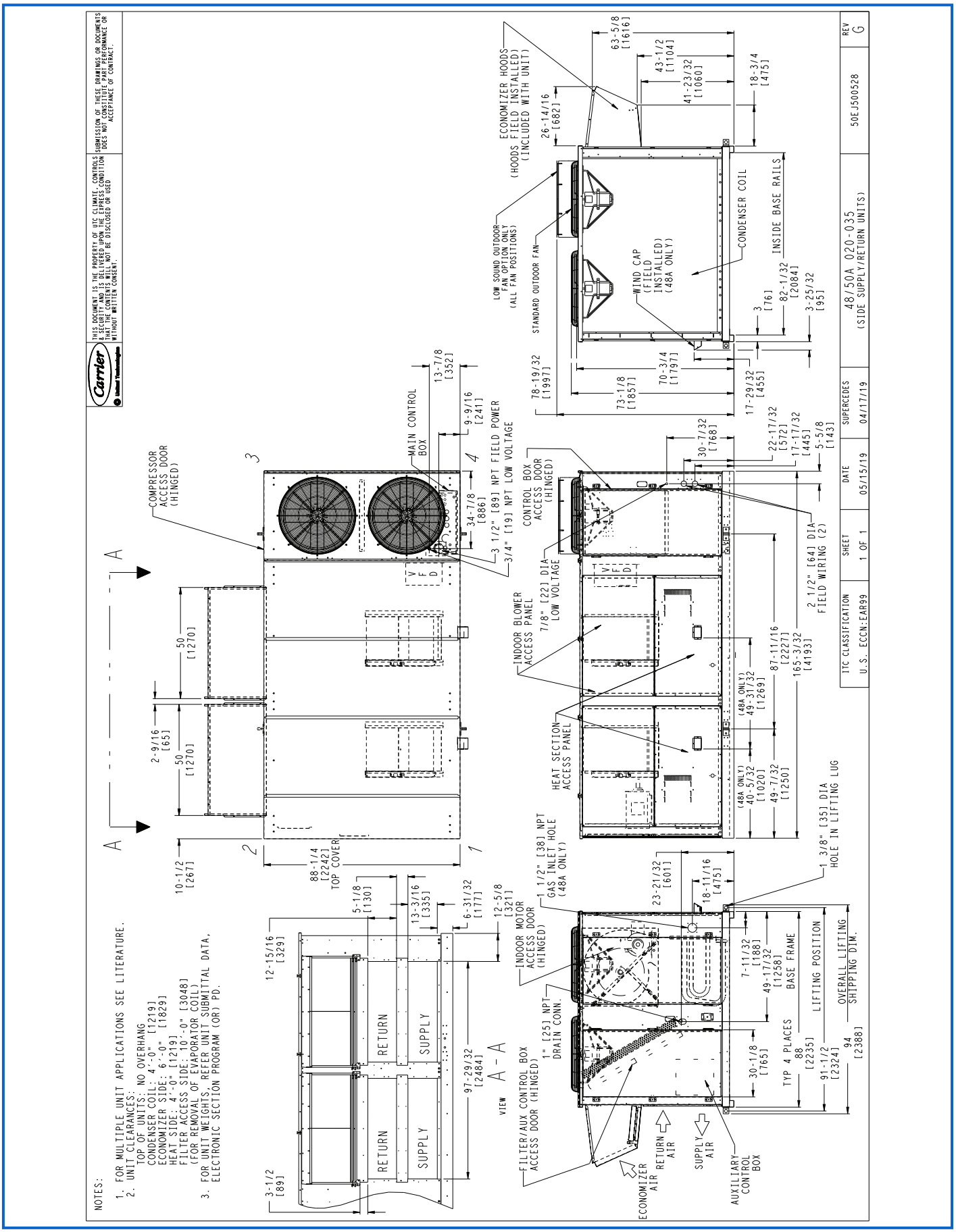

Base unit dimensions 48/50A4,A5,A8,A9040,050

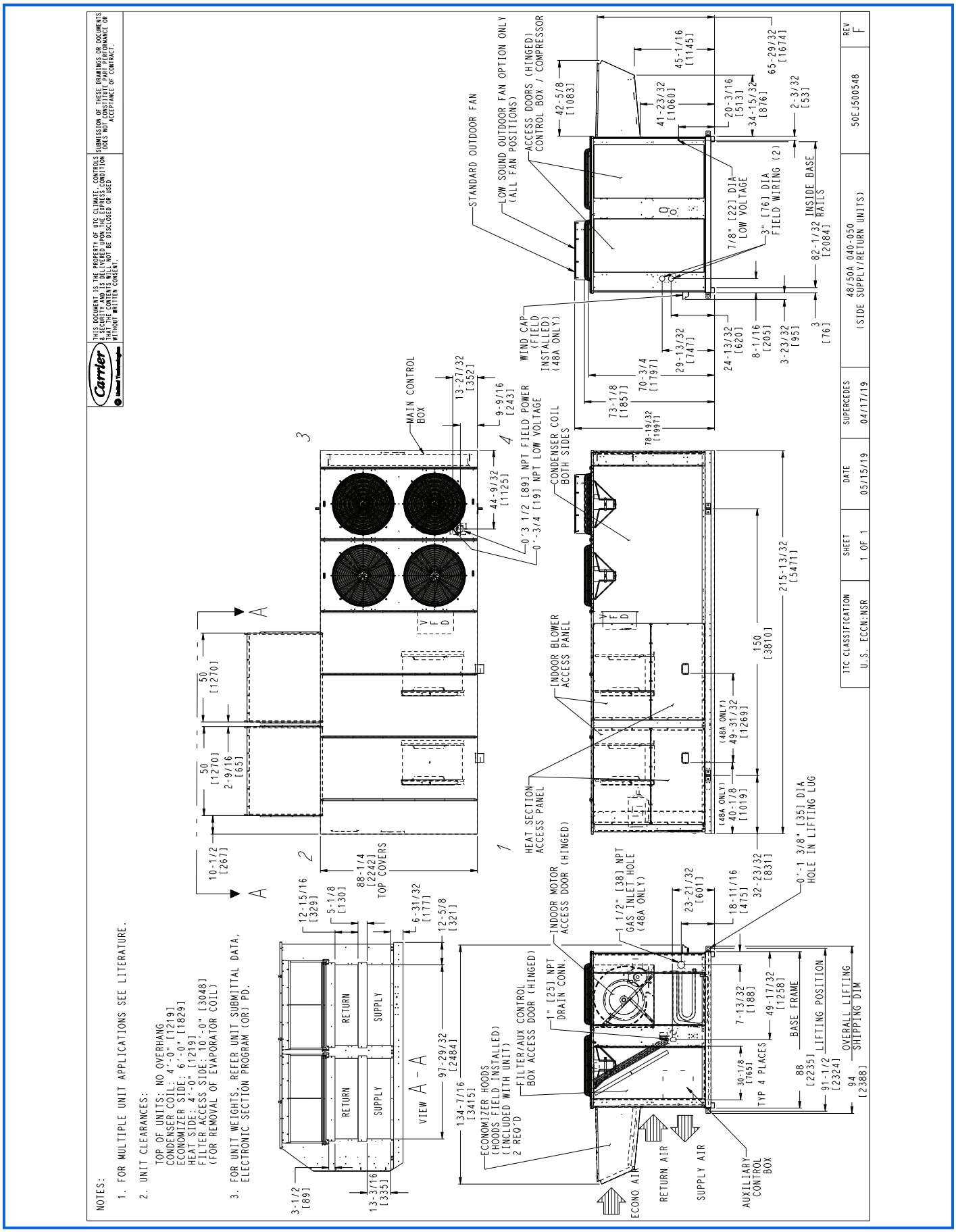

Base unit dimensions 48/50A4,A5,A8,A9060

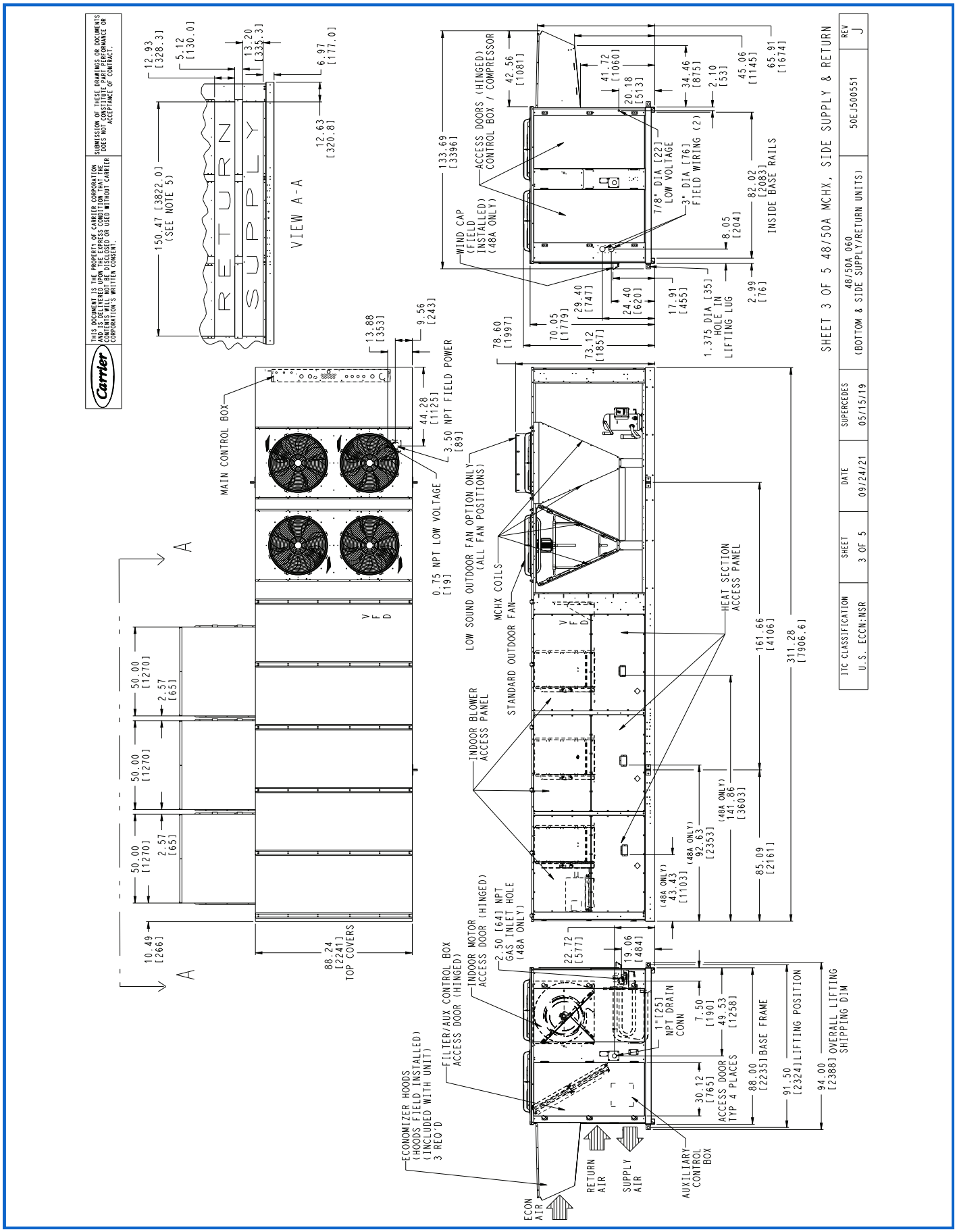

Base unit dimensions 48/50A4,A5,A8,A9060

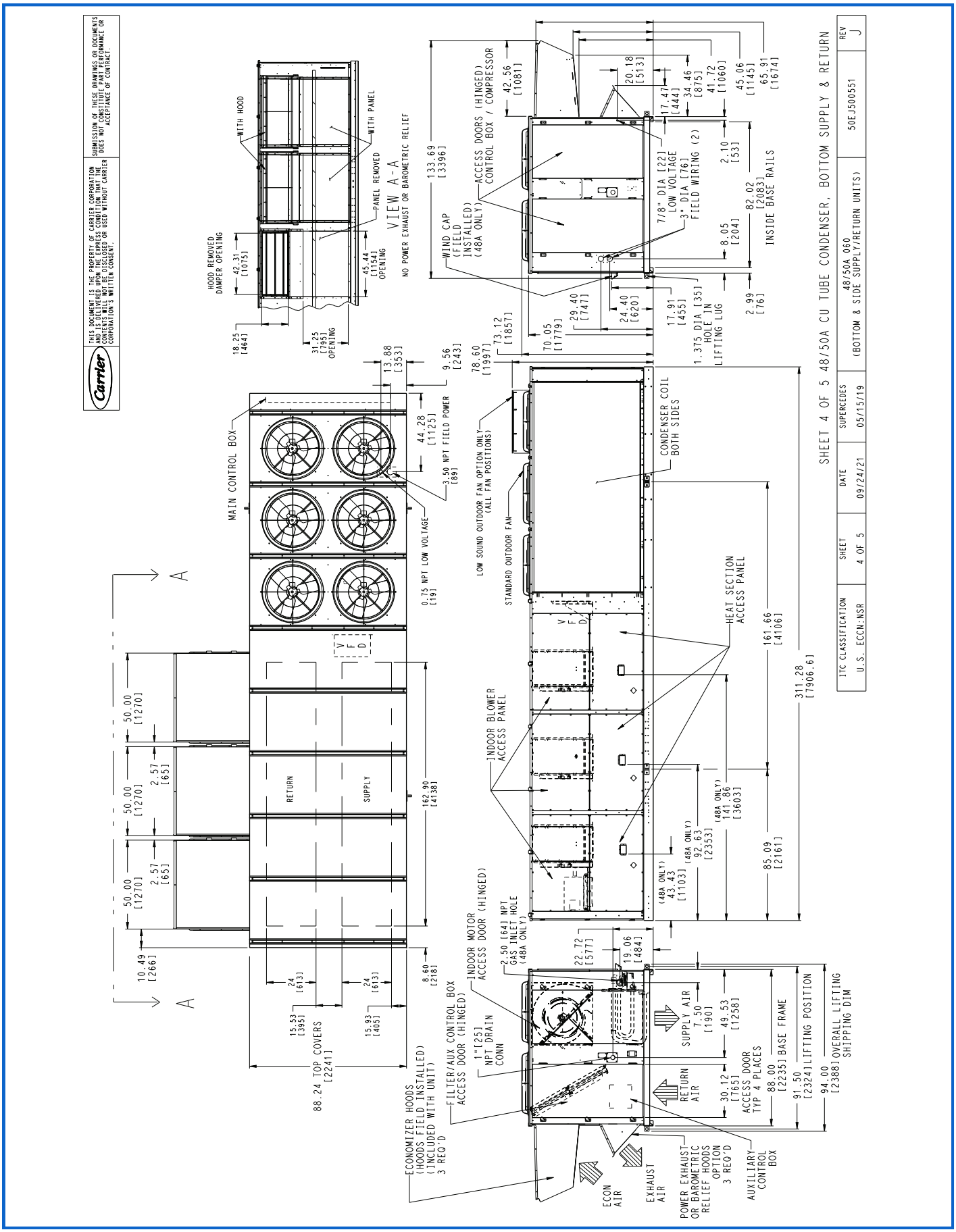

Roof Curb Sizes 020-035

NOTES:
1. Unless otherwise specified, all dimensions are to outside of part.
2. Roof curb accessory CRRFCURB005A00 is shipped disassembled.
3. All roof curb parts are to be 14 ga. galvanized steel.
4. Units with electric heat must be installed with a 90° elbow on the supply duct prior to any supply take offs or branches.
5. Dimensions in [ ] are in millimeters. All other dimensions are in inches.

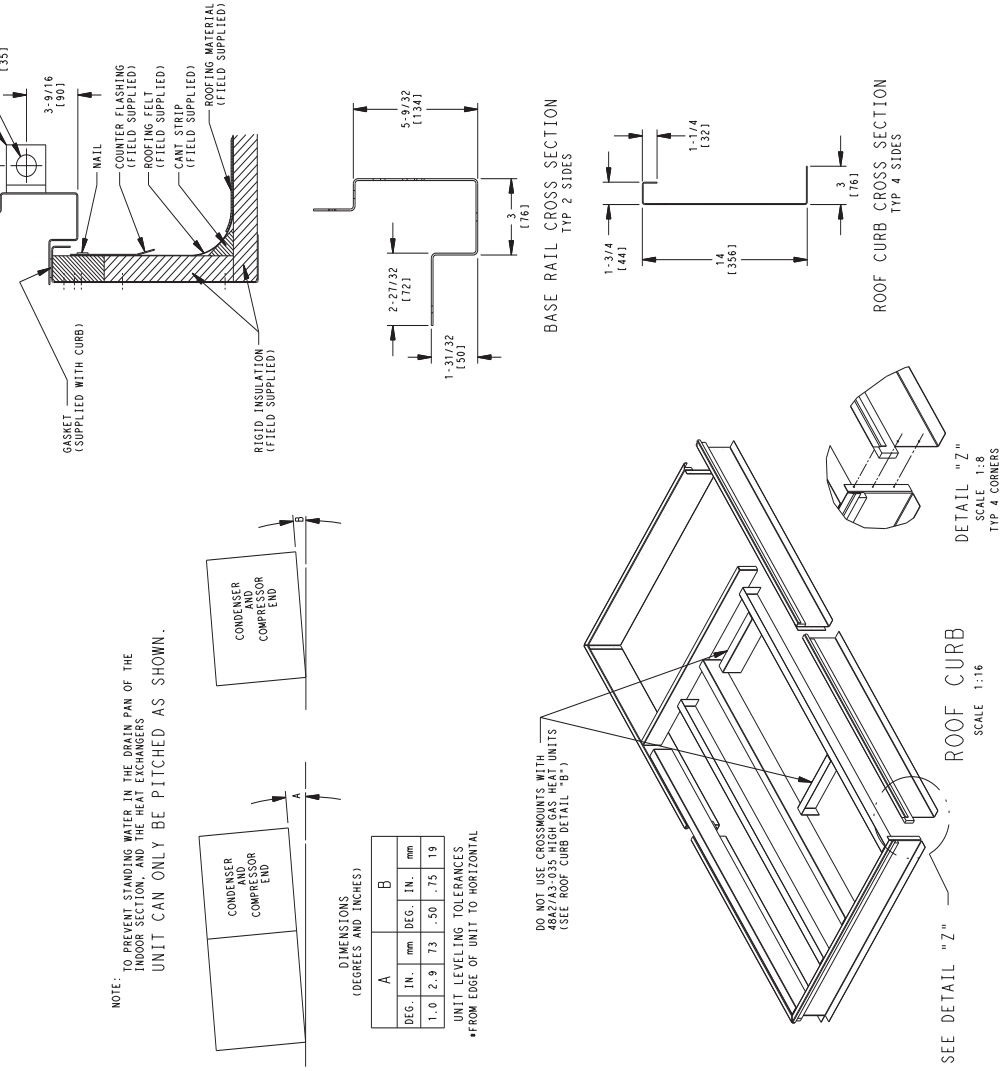

Roof Curb Sizes 040 and 050

NOTES:
1. Unless otherwise specified, all dimensions are to outside of part.
2. Roof curb accessory CRRFCURB006A00 is shipped disassembled.
3. All roof curb parts are to be 14 ga. galvanized steel.
4. Units with electric heat must be installed with a 90° elbow on the supply duct prior to any supply take offs or branches.
5. Dimensions in [ ] are in millimeters. All other dimensions are in inches.

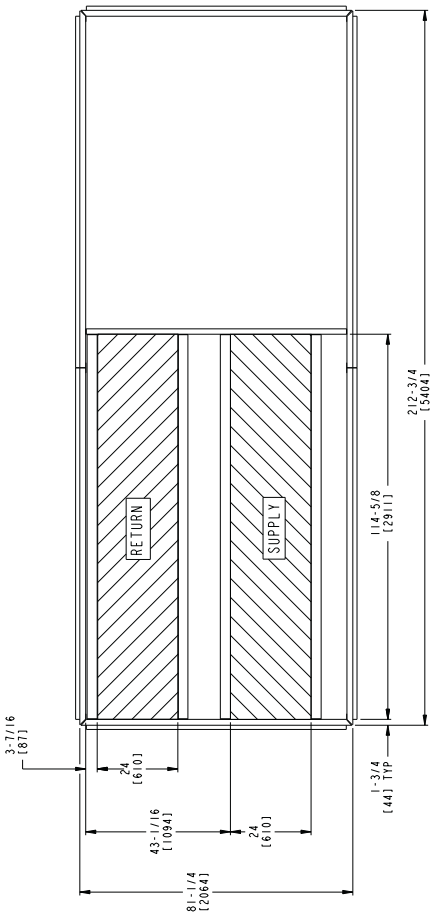

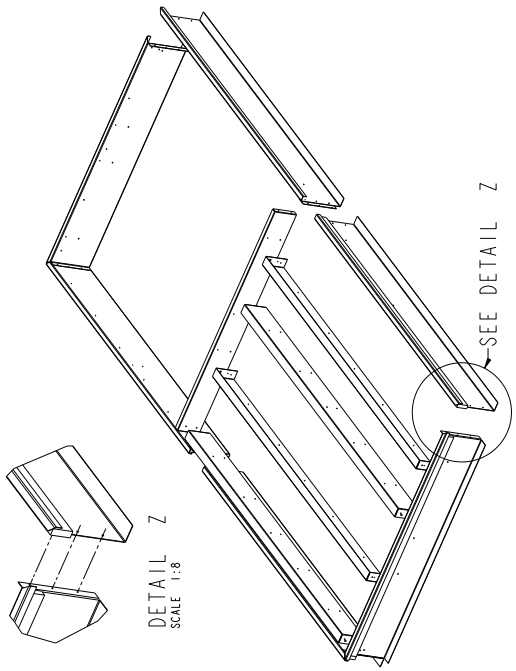

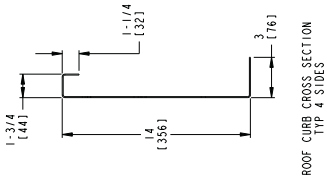

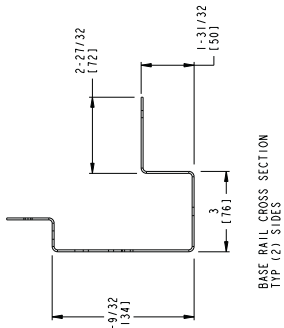

NOTE:
TO PREVENT STANDING WATER IN THE DRAIN PAN OF THE INDOOR SECTION, AND THE HEAT EXCHANGERS
UNIT CAN ONLY BE PITCHED AS SHOWN.

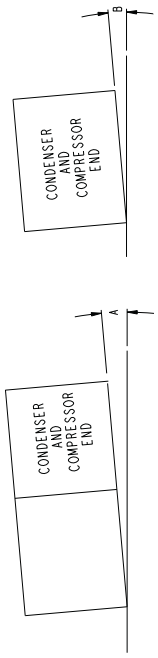

DIMENSIONS
(DEGREES AND INCHES)

A			B		
DEG.	IN.	mm	DEG.	IN.	mm
1.0	2.9	73	.50	.75	19

UNIT LEVELING TOLERANCES
*FROM EDGE OF UNIT TO HORIZONTAL

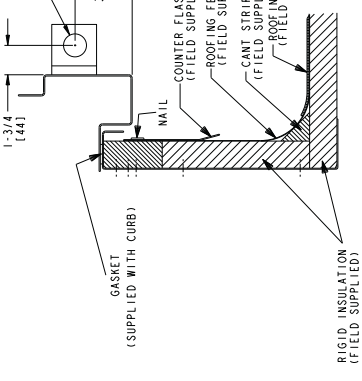

Roof Curb 48A2,A3,A6,A7060, 50A2,A3,A6,A7060 without Electric Heat/Unit Support 48/50A4,A5,A8,A9060

NOTES:
1. Unless otherwise specified, all dimensions are to outside of part.
2. Roof curb accessory CRRFCURB014A00 is shipped disassembled.
3. All roof curb parts are to be 14 ga. galvanized steel.
4. Dimensions in [ ] are in millimeters. All other dimensions are in inches.

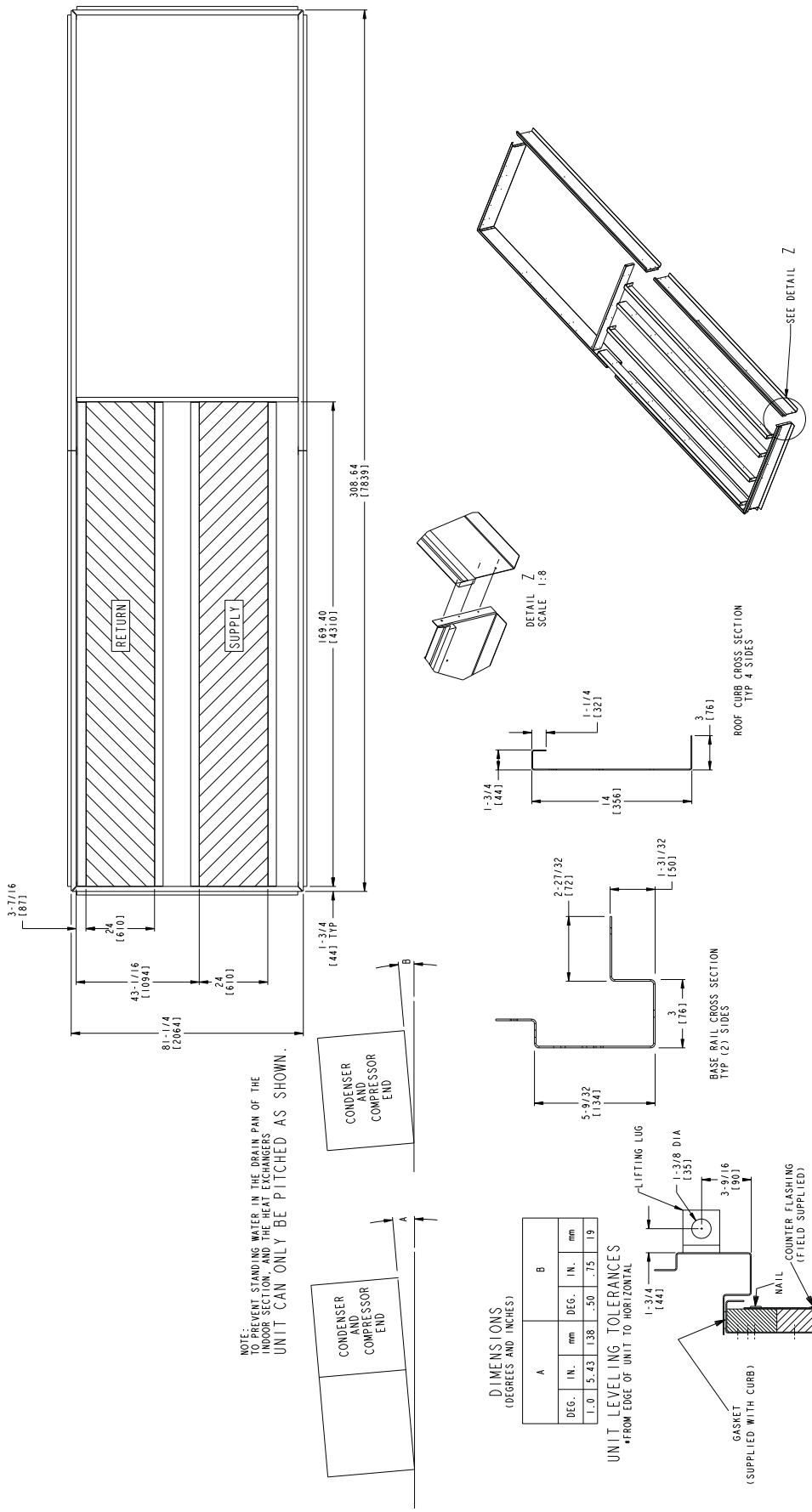

DIMENSIONS
(DEGREES AND INCHES)

A			B		
DEG.	IN.	mm	DEG.	IN.	mm
1.0	5.43	138	.50	.75	19

UNIT LEVELING TOLERANCES
*FROM EDGE OF UNIT TO HORIZONTAL

Roof Curb 50A2,A3,A6,A7060 with Electric Heat

NOTES:
1. Unless otherwise specified, all dimensions are to outside of part.
2. Roof curb accessory CRRFCURB009A00 is shipped disassembled.
3. All roof curb parts are to be 14 ga. galvanized steel.
4. Units with electric heat must be installed with a 90° elbow on the supply duct prior to any supply take offs or branches.
5. Dimensions in [ ] are in millimeters. All other dimensions are in inches.

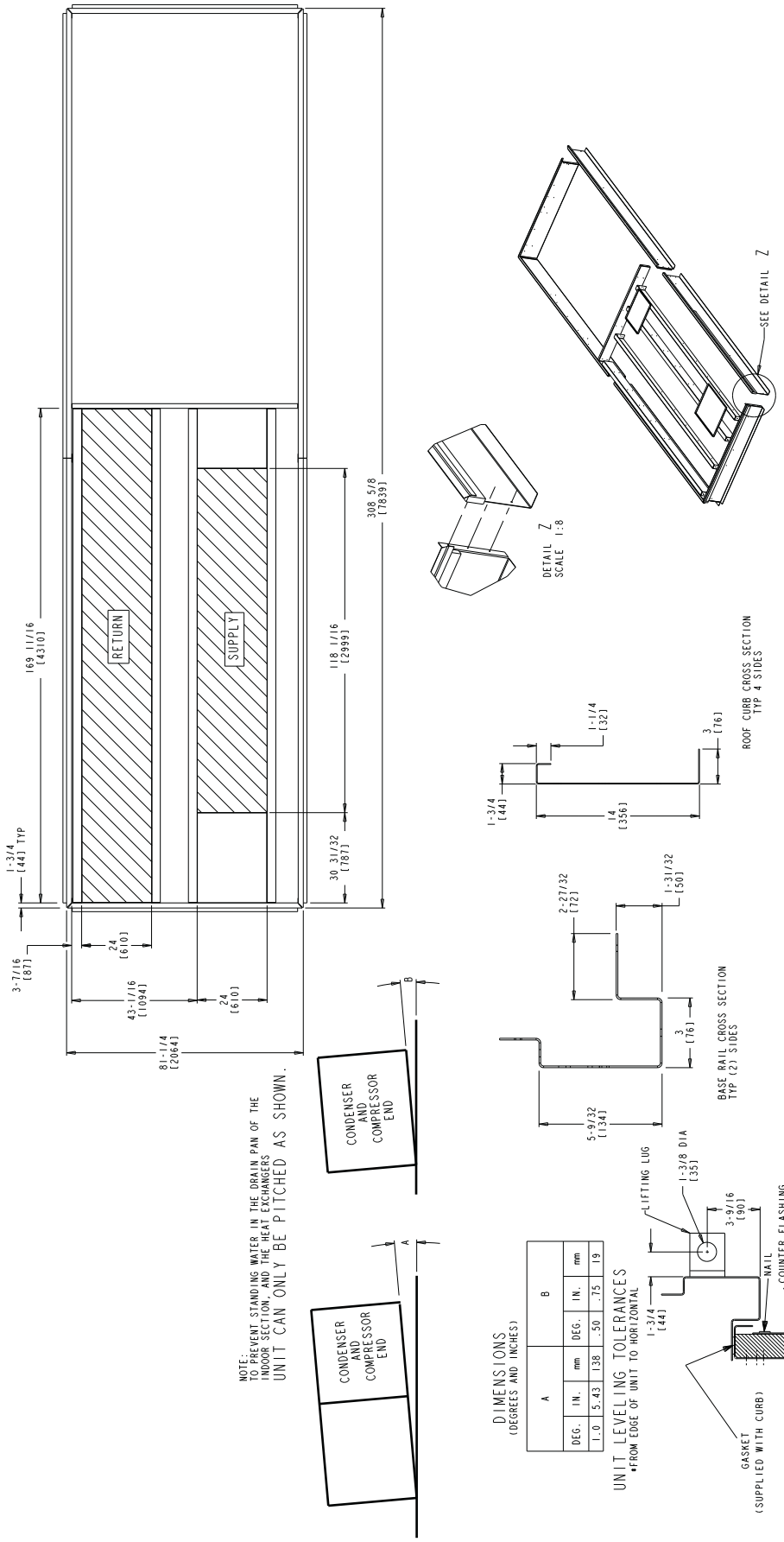

DIMENSIONS
(DEGREES AND INCHES)

A			B		
DEG.	IN.	mm	DEG.	IN.	mm
1.0	5.43	138	.50	.75	19

UNIT LEVELING TOLERANCES
*FROM EDGE OF UNIT TO HORIZONTAL

Standard and Modulating Power Exhaust and Barometric Relief

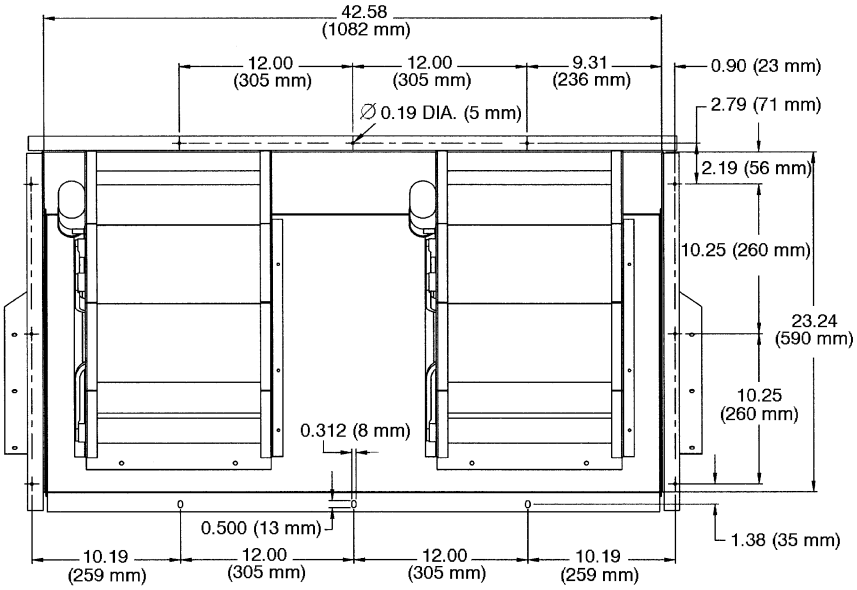

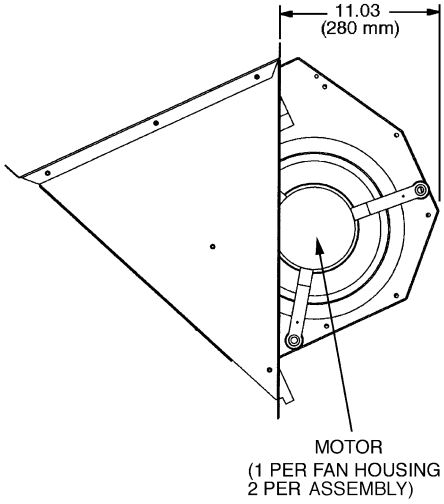

LEGEND
∅ — Diameter

NOTES:
1. Unless otherwise specified, all dimensions are to outside of part.
2. Dimensions are in inches.
3. Unit sizes 020-050 have 2 fan assemblies. Unit size 060 has 3 fan assemblies.
4. For 48/50A4,A5,A8,A9 units, the accessory power exhaust or barometric relief must be mounted in the field-supplied return ductwork.

High Capacity Power Exhaust Accessory

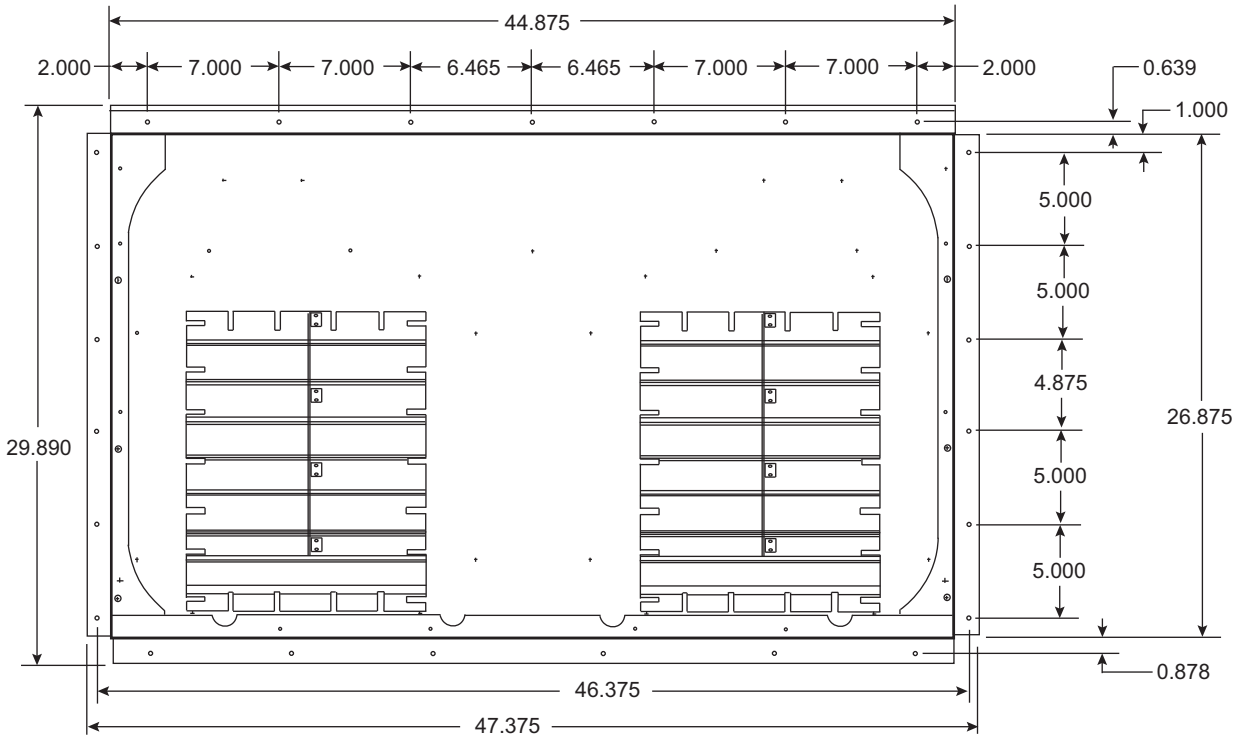

NOTE: Dimensions are in inches.

Selection procedure (with example)

I Determine cooling and heat requirements at design conditions.

Given:

Type Application ..... VAV
Required Cooling Capacity (TC) .....480,000 Btuh
Sensible Heat Capacity (SHC) .....338,000 Btuh
Required Heating Capacity .....300,000 Btuh
Design Outdoor Air db Temperature..... 95°F
Design Outdoor Air wb Temperature ..... 67°F
Climate Type (as per ASHRAE 90.1 Table D).... Dry
Indoor-Air Temperature..... 80°F edb, 67°F ewb
Evaporator Air Quantity..... 16,000 cfm
External Static Pressure .....1.4 in. wg
Electrical Characteristics (V-Ph-Hz) 460-3-60
Unit Type ..... Gas Heating Vertical Discharge

II Select the unit based on required cooling capacity.

Entering Cooling Capacity table at air condenser entering temperature of 95°F. Unit 48A3D040 at 16,000 cfm and 67°F ewb will provide the total capacity of 485,000 Btuh and a SHC of 380,000 Btuh. Calculate SHC correction, if required, using notes under cooling capacity table.

III Select heat capacity of unit to provide design condition requirements.

In the Gas Heating Capacities and Efficiencies table, note that unit 48A3D040 will provide 324,000 Btuh with an input of 400,000 Btuh.

IV Select supply fan to provide design condition requirements.

Tabulated fan performance includes 2-in. throw-away filters, wet evaporator coil, economizer, cabinet losses, and roof curb. Find fan rpm and bhp at 1.4 in. wg and 16,000 cfm on 48A3D040 Fan Performance table for vertical applications. Find that the fan speed is 1063 rpm and the power required is 19.06 bhp. Refer to the Motor Limitations table which shows the 20 hp motor is required.

V Select unit that corresponds to the power source available.

The model number nomenclature shows that a 460-3-60 unit is available.

VI Select the options and accessories.

As per the ASHRAE 90.1 requirements, this unit is located in a dry climate and therefore is required to have an economizer. As this is a dry climate, either differential dry bulb changeover, outdoor air changeover or differential enthalpy should be used. Outside air enthalpy cannot be used.

Select the options and model number using the options summary and model number charts in the price pages.

Note, as an alternative, a computerized selection program, Applied *RTU*Builder, is available for use in selecting and optimizing the unit for your application.

Humidi-MiZer® performance data

Carrier's Humidi-MiZer adaptive dehumidification system is an all-inclusive factory-installed option that can be ordered with WeatherMaker® 48/50A rooftop units.

This system expands the envelope of operation of the A Series rooftop to provide unprecedented flexibility that will meet year-round comfort conditions.

The Humidi-MiZer adaptive dehumidification system has the industry's only dual dehumidification mode setting. The WeatherMaker rooftop, coupled with the Humidi-MiZer adaptive dehumidification system, is capable of modulating between normal design cooling mode, subcooling mode, and hot gas reheat mode.

Normal design cooling mode will operate under the normal sequence of operation. Subcooling mode will operate to satisfy part load type conditions. Hot Gas Reheat mode will operate when outdoor temperatures diminish and the need for latent capacity is required for sole humidity control. Hot Gas Reheat mode will provide neutral air for maximum dehumidification operation.

The WeatherMaker A Series next generation version of Carrier's Humidi-MiZer system includes refrigerant modulating valves that provide variable flow bypass around the condenser. This innovative feature ensures exact control of the supply-air temperature as the unit lowers the evaporator temperature to increase latent capacity.

Additionally, when the space requires dehumidification only, the Humidi-MiZer system can increase hot discharge gas bypass to the Humidi-MiZer coil in order to heat the air to the exact neutral state required—no overcooling or overheating with latent capacity similar to that provided in the full subcooling mode.

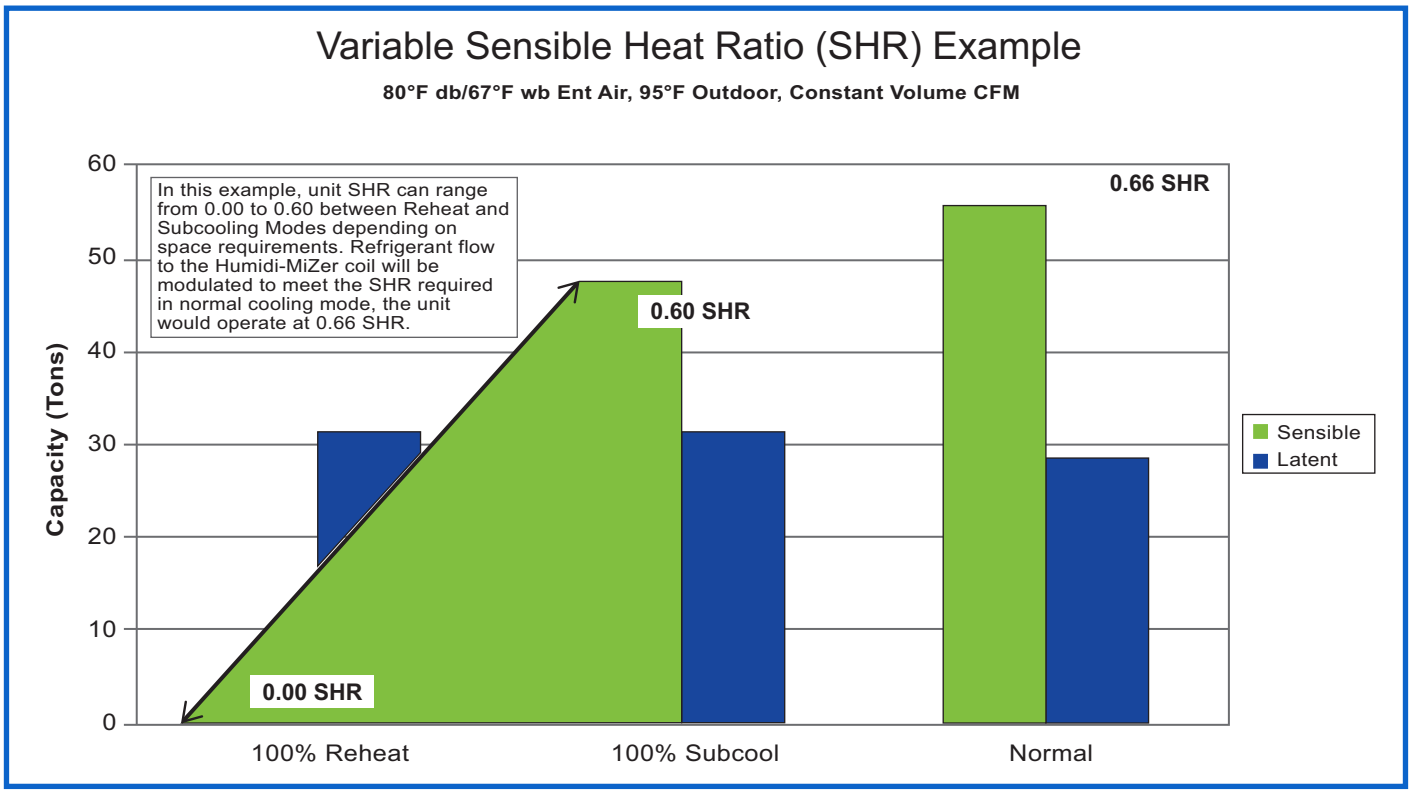

Legend and notes for Cooling Capacities tables on pages 35-58.

LEGEND

BF — Bypass Factor
Edb — Entering Dry Bulb
Ewb — Entering Wet Bulb
kW — Compressor Motor Power Input
RH — Relative Humidity
SCFM — Standard Cubic Feet per Minute
SHC — Sensible Heat Capacity (1000 Btuh)
TC — Total Capacity (1000 Btuh) Gross
VAV — Variable Air Volume

Boldface — VAV Units Only

NOTES:

1. Direct interpolation is permissible. Do not extrapolate.
2. The following formulas may be used:

$$tldb = tedb - \frac{\text{sensible capacity (Btuh)}}{1.10 \times cfm}$$

tlwb = Wet-bulb temperature corresponding to enthalpy of air leaving evaporator coil (hlwb)

$$hlwb = hewb - \frac{\text{total capacity (Btuh)}}{4.5 \times cfm}$$

Where: hewb = Enthalpy of air entering evaporator coil.

3. The SHC is based on 80°F edb temperature of air entering evaporator coil. Below 80°F edb, subtract (corr factor x cfm) from SHC. *Above 80°F edb, add (corr factor x cfm) to SHC.*

BF	ENTERING AIR DRY-BULB TEMP (F)					
	79	78	77	76	75	under 75
	81	*82*	*83*	*84*	*85*	*over 85*
	Correction Factor					
.05	1.04	2.07	3.11	4.14	4.18	Use formula shown below.
.10	.98	1.96	2.94	3.92	4.91	
.20	.87	1.74	2.62	3.49	4.36	

Interpolation is permissible.
Correction Factor = 1.10 x (1 – BF) x (edb – 80).

4. Cooling capacities are gross and do not include deduction for indoor fan motor heat.
5. Units with Humidi-MiZer system are only able to operate in dehumidification mode down to 200 cfm/ton. Operation may be additionally limited based on entering coil conditions.

Cooling Capacities

48/50A020 (20 TONS) — STANDARD MODE

Temp (F) Air Entering Condenser (Edb)		Evaporator Air Quantity — Cfm																			
		4,000					5,000					6,000					7,000				
		Evaporator Air — Ewb (F)																			
		75	72	67	62	57	75	72	67	62	57	75	72	67	62	57	75	72	67	62	57
75	TC	268	258	236	214	195	284	272	250	228	208	294	282	260	239	224	302	289	268	246	232
	SHC	109	119	141	161	179	113	128	155	180	201	116	136	168	197	224	121	144	180	213	232
	kW	14.1	14.0	13.8	13.7	13.6	14.3	14.2	14.0	13.8	13.7	14.5	14.3	14.1	13.9	13.8	14.6	14.4	14.1	13.9	13.8
	BF	0.00	0.00	0.09	0.15	0.14	0.00	0.00	0.19	0.16	0.17	0.00	0.27	0.18	0.17	0.24	0.00	0.23	0.19	0.17	0.28
85	TC	261	250	228	207	188	276	264	242	221	200	286	273	252	230	218	293	280	259	238	226
	SHC	106	115	138	158	176	110	125	152	176	194	112	133	164	193	218	118	141	176	210	226
	kW	16.0	16.0	15.8	15.7	15.5	16.2	16.1	15.9	15.8	15.6	16.4	16.2	16.0	15.8	15.8	16.5	16.3	16.1	15.9	15.8
	BF	0.02	0.00	0.21	0.15	0.13	0.00	0.14	0.18	0.15	0.17	0.00	0.24	0.18	0.16	0.26	0.15	0.22	0.18	0.17	0.30
95	TC	253	242	220	200	181	267	254	233	212	198	277	264	242	221	207	283	271	249	228	218
	SHC	102	112	134	154	172	106	122	148	172	198	109	130	161	190	207	115	137	173	206	218
	kW	18.2	18.2	18.0	17.9	17.9	18.4	18.3	18.2	18.0	17.9	18.5	18.4	18.2	18.1	18.0	18.6	18.5	18.3	18.1	18.0
	BF	0.00	0.00	0.18	0.14	0.13	0.00	0.12	0.17	0.15	0.20	0.00	0.22	0.17	0.16	0.25	0.13	0.21	0.18	0.17	0.32
105	TC	244	232	211	191	174	257	244	223	203	187	266	253	232	211	200	272	260	238	218	211
	SHC	97	109	130	150	168	101	118	144	168	187	106	126	156	185	200	112	134	168	201	211
	kW	20.7	20.6	20.6	20.7	20.8	20.8	20.8	20.6	20.6	20.8	20.9	20.8	20.7	20.6	20.7	21.0	20.9	20.7	20.6	20.6
	BF	0.00	0.00	0.17	0.13	0.13	0.00	0.25	0.16	0.14	0.19	0.00	0.20	0.16	0.15	0.28	0.28	0.20	0.17	0.17	0.35
115	TC	234	222	201	182	166	246	233	212	193	180	254	241	220	201	192	260	247	227	207	202
	SHC	93	105	126	146	162	97	114	139	164	180	103	122	152	180	192	108	129	164	195	202
	kW	23.4	23.4	23.6	23.9	24.3	23.5	23.4	23.5	23.7	24.0	23.6	23.5	23.5	23.7	23.8	23.7	23.6	23.5	23.7	23.7
	BF	0.00	0.00	0.15	0.13	0.15	0.00	0.21	0.15	0.14	0.22	0.13	0.19	0.16	0.15	0.31	0.24	0.19	0.17	0.18	0.38
120	TC	228	216	196	178	161	240	227	207	188	175	247	235	215	195	188	253	241	220	201	198
	SHC	91	103	124	143	159	95	112	137	161	175	101	120	150	178	188	106	127	162	192	198
	kW	24.9	25.1	25.4	25.7	26.3	24.9	25.0	25.2	25.5	25.8	25.0	25.0	25.1	25.4	25.6	25.1	25.0	25.1	25.3	25.4
	BF	0.00	0.12	0.14	0.12	0.15	0.00	0.20	0.15	0.14	0.24	0.29	0.18	0.16	0.15	0.32	0.23	0.18	0.17	0.18	0.39

48/50A020 (20 TONS) — STANDARD MODE (cont)

Temp (F) Air Entering Condenser (Edb)		Evaporator Air Quantity — Cfm														
		8,000					9,000					10,000				
		Evaporator Air — Ewb (F)														
		75	72	67	62	57	75	72	67	62	57	75	72	67	62	57
75	TC	308	295	274	252	243	313	299	278	257	251	317	303	282	262	259
	SHC	126	151	191	228	243	130	158	202	242	251	135	164	212	251	259
	kW	14.7	14.5	14.2	14.0	13.9	14.8	14.5	14.3	14.0	14.0	14.8	14.6	14.3	14.1	14.1
	BF	0.34	0.22	0.19	0.19	0.34	0.28	0.22	0.20	0.21	0.40	0.26	0.23	0.21	0.25	0.44
85	TC	298	286	265	243	236	302	290	269	248	244	306	294	273	253	251
	SHC	123	148	188	224	236	127	155	199	236	244	131	161	209	247	251
	kW	16.6	16.4	16.1	16.0	15.9	16.6	16.4	16.2	16.0	16.0	16.7	16.5	16.2	16.1	16.0
	BF	0.29	0.21	0.19	0.19	0.36	0.26	0.22	0.20	0.22	0.41	0.25	0.22	0.21	0.25	0.46
95	TC	288	276	255	234	228	293	280	259	239	236	296	284	262	245	243
	SHC	120	145	184	219	228	124	151	195	230	236	129	158	205	239	243
	kW	18.7	18.5	18.3	18.2	18.1	18.7	18.6	18.4	18.2	18.2	18.8	18.6	18.4	18.2	18.3
	BF	0.27	0.21	0.18	0.19	0.38	0.25	0.21	0.19	0.23	0.43	0.24	0.22	0.20	0.28	0.47
105	TC	277	265	243	223	220	281	269	248	229	227	284	272	251	235	234
	SHC	116	141	180	213	220	121	148	191	223	227	125	154	201	232	234
	kW	21.1	20.9	20.8	20.6	20.6	21.1	21.0	20.8	20.6	20.6	21.2	21.0	20.8	20.7	20.7
	BF	0.24	0.20	0.18	0.21	0.41	0.23	0.20	0.19	0.25	0.45	0.23	0.21	0.20	0.29	0.49
115	TC	264	252	231	213	211	268	256	235	219	218	271	258	238	225	224
	SHC	113	137	175	206	211	117	144	186	216	218	121	150	197	221	224
	kW	23.7	23.6	23.5	23.6	23.6	23.8	23.7	23.5	23.5	23.6	23.8	23.7	23.5	23.5	23.5
	BF	0.22	0.19	0.18	0.22	0.43	0.22	0.20	0.19	0.26	0.48	0.22	0.21	0.20	0.32	0.52
120	TC	257	245	225	207	206	261	248	229	215	213	263	251	232	219	219
	SHC	110	134	173	202	206	115	141	184	215	213	119	148	194	219	219
	kW	25.1	25.1	25.1	25.2	25.3	25.2	25.1	25.0	25.2	25.2	25.3	25.1	25.0	25.1	25.1
	BF	0.22	0.19	0.18	0.23	0.44	0.22	0.20	0.19	0.29	0.49	0.22	0.21	0.20	0.32	0.53

See legend on page 34.

Cooling Capacities (cont)

48/50A020 (20 TONS) — SUBCOOLING MODE

Temp (F) Air Entering Condenser (Edb)		Evaporator Air Quantity – SCFM																			
		4,000					5,000					6,000					7,000				
		Evaporator Air Ewb (F)																			
		75	72	67	62	57	75	72	67	62	57	75	72	67	62	57	75	72	67	62	57
75	TC	265	249	223	204	184	285	269	239	220	199	293	277	251	232	212	303	286	260	236	222
	SHC	96	109	126	147	166	107	121	140	168	191	109	126	153	186	209	115	134	166	197	222
	kW	14.0	13.8	13.6	13.5	13.4	14.1	14.0	13.7	13.6	13.5	14.2	14.0	13.8	13.7	13.6	14.3	14.1	13.9	13.7	13.6
	BF	0.00	0.02	0.09	0.10	0.10	0.00	0.08	0.11	0.12	0.12	0.03	0.11	0.13	0.14	0.19	0.08	0.14	0.15	0.15	0.25
85	TC	249	234	201	193	173	265	250	219	207	187	277	262	240	214	199	286	270	248	226	212
	SHC	83	96	106	139	157	91	105	123	157	179	97	114	145	170	197	102	122	157	191	212
	kW	15.5	15.4	15.1	15.1	15.0	15.7	15.5	15.2	15.2	15.1	15.8	15.6	15.4	15.2	15.1	15.9	15.7	15.5	15.3	15.3
	BF	0.00	0.03	0.09	0.10	0.10	0.01	0.09	0.12	0.12	0.14	0.05	0.12	0.13	0.14	0.20	0.10	0.14	0.15	0.15	0.26
95	TC	235	222	201	177	162	251	237	214	192	177	262	247	223	204	188	270	255	231	210	199
	SHC	72	87	108	125	148	80	95	121	145	170	86	103	132	163	188	90	110	144	179	199
	kW	17.3	17.2	17.0	16.8	16.7	17.5	17.3	17.1	16.9	16.9	17.6	17.4	17.2	17.0	17.0	17.7	17.5	17.3	17.1	17.0
	BF	0.00	0.05	0.10	0.10	0.10	0.02	0.10	0.12	0.12	0.16	0.07	0.12	0.13	0.14	0.20	0.10	0.14	0.15	0.16	0.28
105	TC	221	207	186	167	150	226	220	199	176	163	246	231	209	189	176	214	238	215	196	181
	SHC	61	75	97	118	138	58	82	109	132	158	72	90	121	151	176	38	97	131	168	181
	kW	19.3	19.2	19.0	18.9	18.8	19.3	19.3	19.2	18.9	18.9	19.6	19.4	19.2	19.1	19.0	19.0	19.5	19.3	19.1	19.0
	BF	0.00	0.07	0.10	0.10	0.11	0.03	0.10	0.12	0.12	0.17	0.08	0.12	0.14	0.14	0.22	0.11	0.14	0.15	0.16	0.30
115	TC	205	191	170	150	136	219	205	184	165	151	199	215	192	173	157	222	200	198	178	168
	SHC	50	63	84	104	126	55	71	97	124	147	31	78	108	140	157	50	63	119	153	168
	kW	21.6	21.5	21.3	21.1	21.1	21.7	21.6	21.4	21.3	21.2	21.4	21.7	21.5	21.4	21.2	21.6	21.4	21.5	21.4	21.3
	BF	0.00	0.08	0.10	0.10	0.11	0.04	0.11	0.12	0.12	0.18	0.09	0.13	0.14	0.14	0.24	0.12	0.14	0.15	0.16	0.32

48/50A020 (20 TONS) — SUBCOOLING MODE (cont)

Temp (F) Air Entering Condenser (Edb)		Evaporator Air Quantity – SCFM														
		8,000					9,000					10,000				
		Evaporator Air Ewb (F)														
		75	72	67	62	57	75	72	67	62	57	75	72	67	62	57
75	TC	317	299	267	242	235	317	300	273	248	243	322	305	280	258	251
	SHC	126	147	177	213	235	126	149	188	227	243	130	156	202	246	251
	kW	14.4	14.3	13.9	13.7	13.7	14.4	14.2	14.0	13.8	13.8	14.4	14.3	14.1	13.9	13.8
	BF	0.12	0.16	0.17	0.17	0.32	0.14	0.18	0.18	0.19	0.37	0.17	0.19	0.20	0.21	0.42
85	TC	294	277	252	232	222	299	284	260	238	231	307	290	264	238	234
	SHC	108	129	166	205	222	112	138	180	220	231	120	146	190	225	234
	kW	15.9	15.8	15.5	15.4	15.3	16.0	15.8	15.6	15.5	15.4	16.1	15.9	15.7	15.4	15.4
	BF	0.13	0.16	0.17	0.17	0.33	0.15	0.18	0.18	0.20	0.38	0.17	0.19	0.20	0.24	0.43
95	TC	277	262	236	217	209	282	267	241	221	216	287	270	246	226	223
	SHC	95	118	153	194	209	99	124	165	206	216	104	130	176	214	223
	kW	17.7	17.6	17.3	17.2	17.1	17.8	17.6	17.4	17.2	17.2	17.8	17.7	17.4	17.3	17.2
	BF	0.13	0.16	0.17	0.18	0.34	0.15	0.18	0.18	0.20	0.40	0.17	0.19	0.20	0.25	0.44
105	TC	248	224	221	198	195	230	240	225	186	199	256	217	229	213	207
	SHC	70	84	142	178	195	51	101	153	171	199	77	83	163	203	207
	kW	19.6	19.3	19.3	19.1	19.2	19.3	19.5	19.4	18.9	19.2	19.7	19.2	19.4	19.3	19.2
	BF	0.14	0.16	0.17	0.18	0.36	0.16	0.18	0.18	0.22	0.41	0.18	0.19	0.20	0.26	0.45
115	TC	186	182	204	185	178	237	185	208	189	186	205	187	195	195	192
	SHC	14	46	130	166	178	63	51	140	175	186	31	56	133	187	192
	kW	21.1	21.1	21.6	21.5	21.4	21.7	21.2	21.6	21.5	21.5	21.3	21.2	21.4	21.5	21.5
	BF	0.14	0.16	0.17	0.20	0.38	0.16	0.18	0.18	0.24	0.43	0.18	0.19	0.19	0.27	0.47

See legend on page 34.

Cooling Capacities (cont)

50A020 (20 TONS) — HOT GAS REHEAT MODE

Temp (F) Air Entering Condenser (Edb)		Air Entering Evaporator — Ewb (F)													
		75 Dry Bulb							75 Dry Bulb						
		62.5 Wet Bulb (50% RH)							65.3 Wet Bulb (60% RH)						
		Air Entering Evaporator — SCFM													
		4,000	5,000	6,000	7,000	8,000	9,000	10,000	4,000	5,000	6,000	7,000	8,000	9,000	10,000
40	TC	78	87	94	99	104	107	109	83	93	101	106	111	114	117
	SHC	0	8	16	25	33	41	49	–17	–11	–5	1	6	12	18
	kW	15.8	15.1	14.8	14.5	14.4	14.3	14.2	16.6	15.8	15.4	15.1	14.9	14.8	14.7
	BF	0.07	0.09	0.11	0.13	0.14	0.15	0.17	0.05	0.08	0.10	0.12	0.14	0.15	0.17
50	TC	72	81	87	92	95	98	100	76	86	92	97	101	104	107
	SHC	–4	4	12	21	29	36	44	–21	–15	–10	–4	2	7	13
	kW	16.4	15.7	15.3	15.0	14.9	14.8	14.7	17.1	16.3	15.9	15.6	15.4	15.3	15.2
	BF	0.07	0.09	0.11	0.13	0.14	0.15	0.17	0.06	0.08	0.10	0.12	0.14	0.15	0.17
60	TC	66	75	81	85	88	91	93	71	80	87	91	94	97	99
	SHC	–8	1	9	17	25	33	40	–24	–19	–13	–7	–2	3	9
	kW	17.0	16.2	15.8	15.5	15.4	15.3	15.2	17.7	16.9	16.4	16.1	15.9	15.8	15.7
	BF	0.07	0.09	0.11	0.13	0.14	0.15	0.17	0.06	0.09	0.11	0.12	0.14	0.15	0.17
70	TC	61	69	75	79	82	85	86	65	74	80	85	88	90	92
	SHC	–11	–3	5	14	22	29	37	–28	–22	–17	–11	–5	0	6
	kW	17.6	16.8	16.4	16.1	16.0	15.8	15.8	18.4	17.5	17.0	16.7	16.5	16.3	16.2
	BF	0.07	0.09	0.11	0.13	0.14	0.15	0.17	0.06	0.09	0.11	0.12	0.14	0.15	0.17
75	TC	58	67	72	76	79	81	83	63	71	77	81	84	87	89
	SHC	–13	–4	4	12	20	28	35	–29	–24	–18	–13	–7	–2	4
	kW	17.9	17.2	16.7	16.5	16.3	16.2	16.1	18.7	17.8	17.3	17.0	16.8	16.7	16.6
	BF	0.07	0.09	0.11	0.13	0.14	0.15	0.17	0.06	0.09	0.11	0.12	0.14	0.15	0.17
80	TC	56	64	70	73	76	78	80	60	69	74	78	81	84	85
	SHC	–14	–6	2	10	18	26	34	–31	–25	–20	–14	–9	–3	2
	kW	18.3	17.5	17.1	16.8	16.6	16.5	16.4	19.1	18.2	17.6	17.3	17.1	17.0	16.9
	BF	0.07	0.09	0.11	0.13	0.14	0.15	0.17	0.07	0.09	0.11	0.12	0.14	0.15	0.17

50A020 (20 TONS) — HOT GAS REHEAT MODE (cont)

Temp (F) Air Entering Condenser (Edb)		Air Entering Evaporator — Ewb (F)													
		75 Dry Bulb							75 Dry Bulb						
		68.0 Wet Bulb (70% RH)							70.5 Wet Bulb (80% RH)						
		Air Entering Evaporator — SCFM													
		4,000	5,000	6,000	7,000	8,000	9,000	10,000	4,000	5,000	6,000	7,000	8,000	9,000	10,000
40	TC	87	99	107	113	117	121	123	92	104	112	119	123	127	130
	SHC	–34	–30	–27	–23	–20	–16	–13	–50	–49	–47	–46	–44	–43	–41
	kW	17.4	16.5	16.0	15.6	15.4	15.3	15.2	18.2	17.1	16.5	16.2	15.9	15.8	15.6
	BF	0.02	0.04	0.08	0.11	0.12	0.14	0.16	0.00	0.00	0.03	0.05	0.09	0.11	0.13
50	TC	81	91	98	104	108	111	114	85	96	104	110	114	117	120
	SHC	–38	–34	–31	–28	–24	–21	–17	–54	–53	–51	–50	–49	–47	–46
	kW	17.9	17.0	16.4	16.1	15.9	15.8	15.6	18.7	17.6	17.0	16.6	16.4	16.2	16.1
	BF	0.02	0.06	0.09	0.11	0.13	0.14	0.16	0.00	0.00	0.03	0.06	0.09	0.12	0.14
60	TC	75	85	92	96	100	103	105	79	90	96	101	105	108	111
	SHC	–41	–38	–35	–31	–28	–25	–22	–57	–56	–55	–54	–53	–51	–50
	kW	18.5	17.5	17.0	16.6	16.4	16.3	16.2	19.3	18.2	17.5	17.2	16.9	16.7	16.6
	BF	0.02	0.06	0.09	0.11	0.13	0.15	0.16	0.00	0.01	0.03	0.07	0.10	0.12	0.14
70	TC	70	79	85	90	93	95	97	74	83	90	95	98	101	103
	SHC	–44	–41	–38	–35	–32	–29	–25	–60	–59	–58	–57	–56	–55	–54
	kW	19.1	18.1	17.6	17.2	17.0	16.8	16.7	19.9	18.8	18.1	17.7	17.5	17.3	17.2
	BF	0.03	0.07	0.09	0.11	0.13	0.15	0.16	0.00	0.01	0.04	0.08	0.10	0.12	0.14
75	TC	67	76	82	86	90	92	94	71	80	87	91	95	97	99
	SHC	–46	–43	–40	–37	–33	–30	–27	–62	–61	–60	–59	–58	–57	–55
	kW	19.5	18.4	17.9	17.5	17.3	17.1	17.0	20.2	19.1	18.4	18.1	17.8	17.6	17.5
	BF	0.03	0.07	0.09	0.11	0.13	0.15	0.16	0.00	0.01	0.04	0.08	0.10	0.13	0.14
80	TC	64	73	79	83	86	89	91	68	77	84	88	91	94	96
	SHC	–48	–44	–41	–38	–35	–32	–28	–64	–62	–61	–61	–60	–58	–57
	kW	19.8	18.8	18.2	17.9	17.6	17.5	17.4	20.6	19.4	18.8	18.4	18.1	17.9	17.8
	BF	0.03	0.07	0.09	0.11	0.13	0.15	0.16	0.00	0.01	0.05	0.08	0.11	0.13	0.15

See legend on page 34.

Cooling Capacities (cont)

48/50A025 (25 TONS) — STANDARD MODE

Temp (F) Air Entering Condenser (Edb)		Evaporator Air Quantity — Cfm																			
		5,000					6,250					7,500					8,750				
		Evaporator Air — Ewb (F)																			
		75	72	67	62	57	75	72	67	62	57	75	72	67	62	57	75	72	67	62	57
75	TC	318	305	281	260	239	335	320	296	274	253	347	331	307	284	268	354	339	315	292	280
	SHC	128	142	173	201	226	133	154	190	224	251	138	165	205	242	268	145	175	220	264	280
	kW	18.7	18.4	17.9	17.6	17.2	19.0	18.7	18.2	17.8	17.4	19.3	18.9	18.4	18.0	17.7	19.4	19.1	18.6	18.1	17.9
	BF	0.00	0.00	0.18	0.13	0.11	0.00	0.11	0.16	0.13	0.16	0.00	0.22	0.17	0.15	0.24	0.13	0.21	0.17	0.16	0.32
85	TC	308	295	274	253	232	324	309	287	266	248	334	319	297	275	261	341	327	305	283	273
	SHC	124	139	170	197	222	127	151	186	220	248	135	161	202	242	261	141	170	216	260	273
	kW	20.8	20.5	20.1	19.8	19.5	21.1	20.8	20.3	20.0	19.6	21.3	21.0	20.5	20.1	19.9	21.5	21.2	20.7	20.3	20.1
	BF	0.00	0.00	0.17	0.12	0.12	0.00	0.10	0.16	0.13	0.18	0.00	0.21	0.16	0.15	0.26	0.11	0.20	0.17	0.16	0.33
95	TC	298	286	265	244	224	312	300	278	257	241	321	309	288	266	254	328	316	295	273	265
	SHC	119	136	166	193	217	124	147	182	216	241	131	157	198	236	254	137	166	212	255	265
	kW	23.1	22.8	22.5	22.3	22.0	23.4	23.1	22.8	22.5	22.2	23.6	23.4	23.0	22.6	22.4	23.8	23.5	23.1	22.7	22.6
	BF	0.00	0.00	0.15	0.12	0.12	0.00	0.24	0.15	0.13	0.20	0.13	0.20	0.16	0.15	0.28	0.26	0.19	0.17	0.17	0.35
105	TC	289	277	256	235	214	302	290	268	247	231	311	298	277	255	245	318	304	283	262	257
	SHC	116	133	162	188	208	121	144	178	211	228	128	153	193	231	245	134	163	208	249	257
	kW	25.7	25.6	25.3	25.1	24.9	26.0	25.9	25.6	25.3	25.0	26.2	26.0	25.8	25.5	25.3	26.4	26.2	25.9	25.5	25.4
	BF	0.00	0.00	0.14	0.11	0.12	0.00	0.21	0.15	0.13	0.22	0.11	0.18	0.15	0.15	0.30	0.24	0.18	0.17	0.17	0.37
115	TC	278	266	245	224	207	289	278	256	236	223	298	285	264	243	236	305	290	270	250	247
	SHC	111	128	157	183	203	117	139	173	205	223	124	149	188	225	236	130	158	203	242	247
	kW	28.7	28.6	28.5	28.6	28.3	29.0	28.9	28.7	28.7	28.5	29.2	29.1	28.9	28.7	28.5	29.4	29.1	28.9	28.7	28.6
	BF	0.00	0.09	0.13	0.11	0.16	0.00	0.19	0.14	0.13	0.24	0.26	0.17	0.15	0.15	0.33	0.22	0.17	0.16	0.18	0.40

48/50A025 (25 TONS) — STANDARD MODE (cont)

Temp (F) Air Entering Condenser (Edb)		Evaporator Air Quantity — Cfm														
		10,000					11,250					12,500				
		Evaporator Air — Ewb (F)														
		75	72	67	62	57	75	72	67	62	57	75	72	67	62	57
75	TC	361	346	321	297	291	367	351	326	303	300	372	355	330	309	307
	SHC	152	184	234	281	291	158	192	248	295	300	163	201	261	305	307
	kW	19.6	19.2	18.7	18.2	18.1	19.7	19.3	18.8	18.4	18.3	19.8	19.4	18.9	18.5	18.4
	BF	0.28	0.20	0.18	0.19	0.38	0.25	0.21	0.19	0.21	0.43	0.25	0.22	0.20	0.26	0.48
85	TC	348	332	310	288	283	353	337	315	294	291	357	341	318	299	299
	SHC	148	179	230	275	283	153	188	244	288	291	159	197	257	296	299
	kW	21.6	21.3	20.8	20.4	20.3	21.8	21.4	20.9	20.5	20.4	21.8	21.5	21.0	20.6	20.6
	BF	0.25	0.20	0.18	0.19	0.40	0.24	0.21	0.19	0.23	0.45	0.24	0.21	0.20	0.26	0.49
95	TC	335	321	300	278	275	340	325	304	284	283	343	330	308	290	290
	SHC	144	175	226	270	275	150	184	240	281	283	155	192	253	290	290
	kW	23.9	23.6	23.2	22.8	22.7	24.0	23.7	23.3	22.9	22.9	24.1	23.8	23.4	23.0	23.0
	BF	0.24	0.19	0.18	0.19	0.41	0.23	0.19	0.19	0.24	0.46	0.23	0.21	0.20	0.29	0.50
105	TC	323	310	288	268	266	328	314	292	275	274	331	318	296	280	280
	SHC	140	172	222	260	266	146	180	235	268	274	151	188	248	280	280
	kW	26.6	26.3	26.0	25.5	25.5	26.7	26.4	26.0	25.6	25.7	26.8	26.5	26.1	25.8	25.8
	BF	0.22	0.18	0.18	0.22	0.43	0.22	0.20	0.19	0.27	0.48	0.22	0.21	0.20	0.31	0.52
115	TC	309	297	275	256	255	313	300	278	263	263	317	303	281	269	269
	SHC	136	167	217	254	255	142	175	230	261	263	147	184	243	269	269
	kW	29.6	29.4	29.0	28.7	28.7	29.7	29.4	29.1	28.8	28.8	29.8	29.5	29.1	28.9	28.9
	BF	0.21	0.19	0.18	0.23	0.46	0.21	0.20	0.19	0.30	0.50	0.21	0.21	0.20	0.34	0.54

See legend on page 34.

Cooling Capacities (cont)

48/50A025 (25 TONS) — SUBCOOLING MODE

Temp (F) Air Entering Condenser (Edb)		Evaporator Air Quantity – SCFM																			
		5,000					6,250					7,500					8,750				
		Evaporator Air Ewb (F)																			
		75	72	67	62	57	75	72	67	62	57	75	72	67	62	57	75	72	67	62	57
75	TC	331	298	284	253	233	338	321	292	276	251	359	334	317	290	267	367	358	316	288	271
	SHC	118	121	162	183	212	115	136	170	213	242	130	147	198	236	267	134	170	202	246	271
	kW	18.0	17.2	17.2	16.5	16.4	17.9	17.6	17.1	17.0	16.6	18.2	17.8	17.7	17.3	17.0	18.2	18.4	17.5	17.0	16.8
	BF	0.00	0.01	0.05	0.06	0.07	0.00	0.05	0.08	0.08	0.10	0.02	0.08	0.09	0.10	0.16	0.06	0.10	0.11	0.12	0.24
85	TC	314	294	265	231	222	330	314	283	261	229	332	315	288	274	252	356	337	305	272	260
	SHC	105	120	145	163	203	111	134	163	200	220	107	132	173	223	252	128	154	195	233	260
	kW	19.9	19.4	18.8	18.2	18.4	20.1	19.9	19.1	18.9	18.1	19.9	19.6	19.2	19.2	18.8	20.7	20.3	19.5	18.9	18.6
	BF	0.00	0.02	0.06	0.06	0.07	0.00	0.05	0.08	0.08	0.12	0.03	0.08	0.09	0.10	0.18	0.07	0.10	0.11	0.12	0.26
95	TC	285	281	255	232	208	312	297	265	248	226	325	309	271	258	239	336	318	280	256	254
	SHC	79	110	138	166	190	98	120	149	189	218	105	129	159	211	239	112	139	174	219	254
	kW	21.5	21.7	21.2	20.8	20.3	22.4	22.0	21.2	21.1	20.8	22.6	22.2	21.3	21.2	20.9	22.9	22.4	21.4	21.0	21.2
	BF	0.00	0.02	0.06	0.06	0.07	0.01	0.06	0.08	0.08	0.13	0.04	0.08	0.09	0.10	0.19	0.07	0.10	0.11	0.12	0.27
105	TC	267	264	229	217	196	294	279	253	231	212	293	278	254	228	222	309	293	267	235	236
	SHC	66	97	115	153	180	83	106	140	176	205	76	102	145	183	222	93	120	166	201	236
	kW	23.9	24.1	23.1	23.1	22.8	24.8	24.5	23.9	23.4	23.2	24.4	24.1	23.6	23.1	23.4	25.1	24.6	24.0	23.2	23.7
	BF	0.00	0.02	0.06	0.06	0.07	0.01	0.06	0.08	0.08	0.15	0.04	0.08	0.09	0.12	0.22	0.09	0.12	0.13	0.15	0.30
115	TC	253	245	221	189	170	259	252	223	201	184	268	255	244	211	196	276	262	239	218	220
	SHC	58	83	112	129	155	55	85	114	149	178	60	86	140	169	196	64	93	141	187	220
	kW	26.6	26.9	26.4	25.2	24.7	26.7	26.7	25.9	25.5	25.1	26.9	26.6	26.7	25.7	25.3	27.1	26.8	26.3	25.8	26.3
	BF	0.00	0.04	0.07	0.08	0.11	0.02	0.08	0.10	0.10	0.18	0.06	0.10	0.12	0.12	0.24	0.10	0.12	0.13	0.15	0.32

48/50A025 (25 TONS) — SUBCOOLING MODE (cont)

Temp (F) Air Entering Condenser (Edb)		Evaporator Air Quantity – SCFM														
		10,000					11,250					12,500				
		Evaporator Air Ewb (F)														
		75	72	67	62	57	75	72	67	62	57	75	72	67	62	57
75	TC	371	353	336	306	295	378	372	342	313	306	383	365	348	309	316
	SHC	136	166	229	276	295	142	189	244	294	306	148	184	258	299	316
	kW	18.4	18.1	18.0	17.6	17.4	18.4	18.6	18.1	17.7	17.6	18.6	18.3	18.2	17.4	17.7
	BF	0.09	0.12	0.13	0.14	0.31	0.12	0.14	0.14	0.16	0.37	0.14	0.15	0.16	0.20	0.42
85	TC	349	332	305	279	269	355	338	311	285	289	374	343	316	303	288
	SHC	119	151	203	252	269	125	159	217	268	289	144	168	230	294	288
	kW	20.2	19.9	19.5	19.0	18.8	20.3	20.1	19.6	19.1	19.4	21.0	20.1	19.7	19.7	19.2
	BF	0.10	0.12	0.13	0.14	0.33	0.12	0.14	0.14	0.17	0.38	0.14	0.15	0.15	0.22	0.43
95	TC	327	312	286	262	254	333	317	291	268	263	352	333	304	274	271
	SHC	103	135	188	237	254	108	143	202	252	263	128	163	223	265	271
	kW	22.2	22.0	21.6	21.1	20.9	22.5	22.2	21.7	21.2	21.1	23.1	22.7	22.0	21.3	21.3
	BF	0.10	0.12	0.13	0.15	0.34	0.12	0.14	0.14	0.19	0.39	0.14	0.15	0.15	0.23	0.44
105	TC	315	290	263	254	246	323	307	269	260	254	325	296	273	253	251
	SHC	98	119	169	231	246	106	139	182	244	254	109	132	195	244	251
	kW	25.2	24.4	23.8	24.0	23.8	25.5	25.1	23.9	24.1	24.0	25.5	24.5	24.0	23.6	23.5
	BF	0.12	0.14	0.15	0.18	0.36	0.14	0.16	0.17	0.23	0.42	0.16	0.18	0.18	0.26	0.46
115	TC	281	281	257	237	230	286	285	249	230	238	290	289	266	235	233
	SHC	69	114	167	214	230	73	121	167	215	238	77	129	192	227	233
	kW	27.2	27.5	27.0	26.7	26.5	27.4	27.6	26.5	26.1	26.6	27.4	27.7	27.2	26.2	26.1
	BF	0.12	0.14	0.15	0.20	0.38	0.15	0.16	0.17	0.24	0.43	0.17	0.18	0.18	0.27	0.47

See legend on page 34.

Cooling Capacities (cont)

50A025 (25 TONS) — HOT GAS REHEAT MODE

Temp (F) Air Entering Condenser (Edb)		Air Entering Evaporator — Ewb (F)													
		75 Dry Bulb							75 Dry Bulb						
		62.5 Wet Bulb (50% RH)							65.3 Wet Bulb (60% RH)						
		Air Entering Evaporator — SCFM													
		5,000	6,250	7,500	8,750	10,000	11,250	12,500	5,000	6,250	7,500	8,750	10,000	11,250	12,500
40	TC	75	84	92	97	101	105	107	79	90	98	104	108	112	115
	SHC	–13	–3	7	18	29	39	50	–35	–28	–21	–14	–6	1	9
	kW	18.5	17.6	17.0	16.7	16.4	16.2	16.1	19.4	18.4	17.8	17.4	17.1	16.9	16.7
	BF	0.04	0.06	0.08	0.09	0.11	0.12	0.13	0.03	0.05	0.07	0.09	0.10	0.12	0.13
50	TC	69	78	85	90	94	96	99	73	83	90	95	99	103	105
	SHC	–17	–7	3	14	25	35	45	–39	–32	–26	–18	–11	–4	4
	kW	19.0	18.1	17.5	17.1	16.9	16.7	16.5	20.0	18.9	18.3	17.8	17.5	17.3	17.1
	BF	0.04	0.06	0.08	0.09	0.11	0.12	0.13	0.03	0.06	0.07	0.09	0.11	0.12	0.13
60	TC	63	72	78	82	85	88	90	67	76	83	87	91	94	96
	SHC	–20	–10	0	10	20	31	41	–43	–36	–30	–23	–15	–8	0
	kW	19.5	18.6	18.0	17.6	17.4	17.2	17.0	20.5	19.4	18.8	18.3	18.0	17.8	17.6
	BF	0.04	0.06	0.08	0.09	0.11	0.12	0.13	0.04	0.06	0.07	0.09	0.11	0.12	0.13
70	TC	58	66	72	76	79	81	82	61	70	76	80	83	86	88
	SHC	–24	–14	–4	6	17	27	37	–46	–40	–33	–26	–19	–12	–4
	kW	20.2	19.2	18.6	18.2	17.9	17.7	17.6	21.1	20.0	19.3	18.9	18.6	18.3	18.2
	BF	0.04	0.06	0.08	0.09	0.11	0.12	0.13	0.04	0.06	0.07	0.09	0.10	0.12	0.13
75	TC	55	63	69	73	76	78	79	58	67	73	77	80	82	84
	SHC	–26	–16	–6	5	15	25	35	–48	–42	–35	–28	–21	–14	–6
	kW	20.5	19.5	18.9	18.5	18.2	18.0	17.8	21.5	20.3	19.6	19.2	18.9	18.6	18.4
	BF	0.04	0.06	0.08	0.09	0.11	0.12	0.13	0.04	0.06	0.07	0.09	0.10	0.12	0.13
80	TC	52	60	66	70	72	74	76	56	64	70	74	77	79	81
	SHC	–27	–18	–8	3	13	24	34	–49	–43	–37	–30	–23	–15	–8
	kW	20.8	19.8	19.2	18.8	18.5	18.3	18.1	21.8	20.7	20.0	19.5	19.2	18.9	18.7
	BF	0.05	0.06	0.08	0.09	0.10	0.12	0.13	0.04	0.06	0.07	0.09	0.10	0.12	0.13

50A025 (25 TONS) — HOT GAS REHEAT MODE (cont)

Temp (F) Air Entering Condenser (Edb)		Air Entering Evaporator — Ewb (F)													
		75 Dry Bulb							75 Dry Bulb						
		68.0 Wet Bulb (70% RH)							70.5 Wet Bulb (80% RH)						
		Air Entering Evaporator — SCFM													
		5,000	6,250	7,500	8,750	10,000	11,250	12,500	5,000	6,250	7,500	8,750	10,000	11,250	12,500
40	TC	83	95	104	110	115	118	121	88	100	109	116	121	124	128
	SHC	–57	–53	–49	–46	–41	–37	–33	–78	–77	–76	–75	–74	–73	–71
	kW	20.5	19.3	18.6	18.1	17.7	17.5	17.3	21.6	20.2	19.3	18.8	18.4	18.1	17.9
	BF	0.02	0.03	0.06	0.08	0.10	0.12	0.13	0.00	0.00	0.02	0.04	0.07	0.09	0.12
50	TC	77	88	95	101	105	109	111	80	92	100	106	111	115	118
	SHC	–61	–57	–54	–50	–46	–42	–37	–82	–81	–81	–80	–79	–77	–76
	kW	21.0	19.8	19.0	18.5	18.2	17.9	17.8	22.1	20.7	19.8	19.2	18.9	18.6	18.3
	BF	0.02	0.04	0.06	0.08	0.10	0.12	0.13	0.00	0.00	0.02	0.05	0.07	0.10	0.12
60	TC	71	80	87	93	97	100	102	74	85	92	98	102	105	108
	SHC	–64	–61	–58	–54	–50	–46	–41	–86	–85	–85	–84	–83	–81	–80
	kW	21.6	20.3	19.6	19.0	18.7	18.4	18.2	22.7	21.2	20.3	19.7	19.3	19.0	18.8
	BF	0.02	0.04	0.06	0.08	0.10	0.12	0.13	0.00	0.00	0.02	0.05	0.08	0.10	0.12
70	TC	65	74	80	85	89	91	94	68	78	85	90	94	97	99
	SHC	–68	–65	–62	–58	–54	–50	–45	–89	–89	–88	–88	–87	–85	–84
	kW	22.2	20.9	20.1	19.6	19.2	19.0	18.8	23.3	21.8	20.9	20.3	19.9	19.6	19.3
	BF	0.02	0.04	0.06	0.08	0.10	0.12	0.13	0.00	0.00	0.03	0.06	0.08	0.10	0.12
75	TC	62	71	77	82	85	88	90	65	75	81	86	90	93	95
	SHC	–70	–67	–63	–60	–56	–52	–47	–91	–90	–90	–90	–89	–87	–86
	kW	22.5	21.2	20.4	19.9	19.5	19.3	19.0	23.6	22.1	21.2	20.6	20.2	19.9	19.6
	BF	0.02	0.04	0.07	0.08	0.10	0.12	0.13	0.00	0.01	0.03	0.06	0.08	0.10	0.12
80	TC	59	68	74	78	81	84	86	62	72	78	82	86	89	91
	SHC	–71	–68	–65	–62	–58	–54	–49	–92	–92	–92	–91	–91	–89	–88
	kW	22.8	21.5	20.7	20.2	19.8	19.6	19.4	23.9	22.4	21.5	20.9	20.5	20.2	19.9
	BF	0.02	0.04	0.07	0.08	0.10	0.12	0.13	0.00	0.01	0.03	0.06	0.08	0.10	0.12

See legend on page 34.

Cooling Capacities (cont)

48/50A027 (27 TONS) — STANDARD MODE

Temp (F) Air Entering Condenser (Edb)		Evaporator Air Quantity — Cfm																			
		5,500					6,875					8,250					9,625				
		Evaporator Air — Ewb (F)																			
		75	72	67	62	57	75	72	67	62	57	75	72	67	62	57	75	72	67	62	57
75	TC	339	324	297	273	251	356	340	312	288	268	368	351	323	298	283	377	359	331	305	296
	SHC	138	154	186	215	242	145	168	204	240	265	153	180	222	263	283	161	190	238	284	296
	kW	19.0	18.7	18.3	17.9	17.6	19.4	19.0	18.5	18.1	17.8	19.6	19.3	18.7	18.3	18.1	19.8	19.4	18.9	18.5	18.3
	BF	0.00	0.00	0.15	0.11	0.11	0.00	0.07	0.14	0.12	0.19	0.11	0.19	0.15	0.13	0.26	0.27	0.18	0.16	0.15	0.34
85	TC	329	313	289	265	243	344	329	303	279	262	355	339	313	289	276	364	346	321	295	288
	SHC	134	151	182	211	237	141	164	201	236	262	149	175	218	262	276	156	186	234	279	288
	kW	21.1	20.8	20.4	20.1	19.8	21.5	21.2	20.7	20.4	20.1	21.7	21.4	20.9	20.5	20.3	21.9	21.5	21.1	20.6	20.5
	BF	0.00	0.09	0.13	0.11	0.11	0.00	0.21	0.14	0.12	0.20	0.09	0.18	0.14	0.14	0.28	0.24	0.17	0.15	0.16	0.36
95	TC	319	305	280	256	235	333	319	293	270	254	344	328	303	278	268	352	335	309	285	280
	SHC	130	148	178	207	230	137	160	196	234	254	145	172	214	254	268	153	182	230	273	280
	kW	23.5	23.3	23.0	22.7	22.4	23.8	23.6	23.3	23.0	22.6	24.1	23.8	23.4	23.1	22.9	24.3	24.0	23.6	23.1	23.1
	BF	0.00	0.08	0.13	0.10	0.13	0.13	0.19	0.13	0.12	0.22	0.08	0.17	0.14	0.13	0.30	0.23	0.17	0.15	0.16	0.37
105	TC	309	294	269	246	228	322	307	282	258	244	332	316	290	266	258	339	323	297	274	270
	SHC	125	144	173	202	226	133	156	192	226	244	142	168	209	248	258	149	178	225	264	270
	kW	26.3	26.1	25.9	25.7	25.4	26.6	26.4	26.2	25.9	25.7	26.9	26.7	26.3	26.0	25.8	27.0	26.8	26.4	26.0	26.0
	BF	0.00	0.07	0.12	0.10	0.16	0.10	0.17	0.13	0.12	0.24	0.25	0.16	0.14	0.14	0.33	0.20	0.16	0.15	0.18	0.40
115	TC	296	281	257	235	220	309	293	269	246	235	317	302	277	254	249	324	308	282	262	259
	SHC	120	139	168	196	218	129	151	186	221	235	137	162	203	242	249	144	172	219	254	259
	kW	29.3	29.3	29.4	29.5	29.3	29.7	29.6	29.5	29.5	29.4	30.0	29.8	29.6	29.5	29.4	30.2	29.9	29.7	29.4	29.4
	BF	0.00	0.20	0.12	0.10	0.19	0.08	0.15	0.12	0.12	0.27	0.21	0.15	0.13	0.14	0.35	0.19	0.16	0.15	0.20	0.42

48/50A027 (27 TONS) — STANDARD MODE (cont)

Temp (F) Air Entering Condenser (Edb)		Evaporator Air Quantity — Cfm														
		11,000					12,375					13,750				
		Evaporator Air — Ewb (F)														
		75	72	67	62	57	75	72	67	62	57	75	72	67	62	57
75	TC	384	365	337	311	307	389	371	342	319	316	394	375	346	324	324
	SHC	168	201	254	301	307	174	210	269	309	316	181	219	284	324	324
	kW	19.9	19.6	19.0	18.6	18.5	20.0	19.7	19.1	18.7	18.7	20.1	19.8	19.2	18.8	18.8
	BF	0.23	0.18	0.17	0.18	0.40	0.22	0.19	0.18	0.24	0.45	0.22	0.20	0.19	0.27	0.49
85	TC	370	353	326	302	299	375	358	331	309	307	380	362	334	315	315
	SHC	163	196	250	294	299	170	206	265	301	307	176	215	279	315	315
	kW	22.0	21.7	21.2	20.8	20.7	22.1	21.8	21.3	20.9	20.8	22.2	21.9	21.3	21.0	21.0
	BF	0.22	0.18	0.17	0.19	0.41	0.21	0.19	0.18	0.26	0.46	0.21	0.20	0.19	0.29	0.51
95	TC	358	342	315	292	290	363	346	319	299	298	368	350	322	306	305
	SHC	160	192	245	284	290	166	202	260	295	298	173	211	275	306	305
	kW	24.4	24.1	23.7	23.3	23.2	24.5	24.2	23.8	23.4	23.4	24.7	24.3	23.8	23.5	23.5
	BF	0.21	0.18	0.16	0.22	0.43	0.20	0.19	0.18	0.27	0.48	0.21	0.19	0.19	0.31	0.52
105	TC	345	328	301	281	280	350	332	305	288	288	353	336	308	295	295
	SHC	155	188	240	275	280	162	197	255	285	288	168	206	269	295	295
	kW	27.2	26.9	26.5	26.1	26.1	27.4	27.1	26.6	26.2	26.3	27.5	27.1	26.6	26.4	26.4
	BF	0.20	0.17	0.16	0.24	0.45	0.20	0.18	0.18	0.28	0.50	0.20	0.20	0.19	0.35	0.54
115	TC	329	312	287	268	268	333	316	290	276	276	336	320	293	283	282
	SHC	151	183	235	268	268	157	192	250	276	276	163	201	263	283	282
	kW	30.4	30.0	29.7	29.5	29.5	30.6	30.2	29.7	29.5	29.5	30.7	30.3	29.8	29.6	29.6
	BF	0.19	0.16	0.16	0.23	0.47	0.19	0.18	0.17	0.31	0.52	0.19	0.19	0.19	0.37	0.56

See legend on page 34.

Cooling Capacities (cont)

48/50A027 (27 TONS) — SUBCOOLING MODE

Temp (F) Air Entering Condenser (Edb)		Evaporator Air Quantity – SCFM																			
		5,400					6,750					8,100					9,450				
		Evaporator Air Ewb (F)																			
		75	72	67	62	57	75	72	67	62	57	75	72	67	62	57	75	72	67	62	57
75	TC	329	312	279	257	232	343	320	292	265	251	363	343	313	284	263	360	343	312	286	271
	SHC	117	135	159	190	215	121	138	172	206	245	137	159	198	236	263	131	159	204	251	271
	kW	17.7	17.5	16.8	16.6	16.3	17.8	17.5	17.0	16.6	16.7	18.4	18.0	17.4	16.9	16.6	18.2	17.8	17.5	17.0	16.7
	BF	0.00	0.03	0.08	0.09	0.09	0.01	0.08	0.10	0.11	0.15	0.06	0.11	0.12	0.13	0.22	0.10	0.13	0.14	0.15	0.30
85	TC	311	295	267	234	211	329	310	284	258	227	342	324	295	269	242	339	322	305	278	255
	SHC	103	122	150	169	196	112	132	168	202	222	120	144	184	225	242	114	143	200	246	255
	kW	19.6	19.4	18.9	18.2	17.8	20.0	19.6	19.3	18.8	18.0	20.2	19.9	19.3	18.9	18.3	20.0	19.7	19.5	19.1	18.5
	BF	0.00	0.04	0.08	0.09	0.10	0.02	0.08	0.10	0.11	0.17	0.06	0.11	0.12	0.13	0.23	0.10	0.13	0.14	0.15	0.31
95	TC	283	267	242	219	197	309	292	266	233	213	316	293	267	243	237	329	309	284	260	251
	SHC	78	97	127	156	184	96	117	153	180	208	98	117	160	201	237	109	134	184	230	251
	kW	21.4	21.1	20.6	20.2	19.8	22.1	21.7	21.2	20.5	20.1	22.1	21.6	21.1	20.7	20.8	22.5	22.0	21.5	21.1	21.1
	BF	0.00	0.05	0.08	0.08	0.09	0.02	0.08	0.10	0.11	0.18	0.07	0.11	0.12	0.13	0.25	0.11	0.14	0.14	0.16	0.33
105	TC	275	260	229	204	192	278	263	247	217	208	294	282	258	236	222	299	289	265	241	233
	SHC	74	93	116	144	179	69	92	137	166	204	81	110	154	197	222	84	118	168	215	233
	kW	24.2	23.8	23.0	22.5	22.5	24.0	23.7	23.5	22.8	22.8	24.4	24.2	23.8	23.3	23.1	24.5	24.3	23.9	23.4	23.3
	BF	0.00	0.05	0.08	0.08	0.12	0.03	0.09	0.10	0.11	0.19	0.08	0.11	0.12	0.13	0.26	0.11	0.14	0.14	0.16	0.34
115	TC	245	241	217	196	169	267	251	230	200	192	276	253	230	209	196	283	267	245	216	216
	SHC	48	78	108	139	157	63	84	124	152	189	67	85	130	172	196	72	101	152	189	216
	kW	26.4	26.4	25.9	25.5	24.7	27.0	26.6	26.1	25.4	25.4	27.2	26.5	26.0	25.6	25.3	27.3	27.0	26.4	25.7	25.9
	BF	0.00	0.05	0.08	0.08	0.13	0.03	0.09	0.10	0.11	0.20	0.08	0.11	0.12	0.14	0.28	0.11	0.14	0.14	0.19	0.36

48/50A027 (27 TONS) — SUBCOOLING MODE (cont)

Temp (F) Air Entering Condenser (Edb)		Evaporator Air Quantity – SCFM														
		10,800					12,150					13,500				
		Evaporator Air Ewb (F)														
		75	72	67	62	57	75	72	67	62	57	75	72	67	62	57
75	TC	368	351	332	302	284	375	359	338	311	302	393	374	343	315	303
	SHC	137	169	232	278	284	144	181	246	298	302	163	199	260	309	303
	kW	18.2	18.0	17.8	17.3	16.9	18.4	18.0	17.9	17.5	17.2	18.9	18.5	18.0	17.5	17.2
	BF	0.13	0.15	0.16	0.18	0.36	0.15	0.17	0.18	0.20	0.42	0.17	0.19	0.19	0.25	0.46
85	TC	346	329	302	284	276	351	340	317	288	288	356	340	312	288	286
	SHC	120	152	205	263	276	126	167	229	275	288	131	170	233	283	286
	kW	20.1	19.8	19.4	19.2	19.1	20.2	20.0	19.7	19.1	19.3	20.2	20.0	19.5	19.1	19.1
	BF	0.13	0.16	0.16	0.18	0.38	0.15	0.17	0.18	0.23	0.43	0.18	0.19	0.19	0.27	0.47
95	TC	328	317	290	267	250	342	324	295	264	269	345	329	300	270	278
	SHC	107	144	198	247	250	121	155	211	252	269	125	164	225	265	278
	kW	22.2	22.1	21.7	21.3	20.8	22.8	22.3	21.7	21.1	21.3	22.7	22.4	21.8	21.2	21.5
	BF	0.13	0.16	0.16	0.20	0.39	0.16	0.17	0.18	0.24	0.44	0.18	0.19	0.19	0.28	0.49
105	TC	310	295	262	240	244	306	301	274	255	242	310	295	271	257	250
	SHC	94	127	174	221	244	90	137	194	244	242	95	135	201	255	250
	kW	24.8	24.5	23.7	23.3	23.5	24.6	24.6	24.0	23.7	23.3	24.7	24.4	23.9	23.7	23.5
	BF	0.14	0.16	0.16	0.22	0.40	0.16	0.17	0.18	0.26	0.45	0.18	0.19	0.19	0.29	0.50
115	TC	288	273	242	222	226	295	277	253	237	234	296	281	257	241	241
	SHC	77	110	158	204	226	84	117	178	228	234	86	126	191	241	241
	kW	27.4	27.1	26.3	25.8	26.1	27.7	27.1	26.6	26.3	26.3	27.6	27.3	26.7	26.4	26.4
	BF	0.14	0.16	0.16	0.23	0.42	0.16	0.17	0.18	0.27	0.47	0.18	0.19	0.20	0.30	0.51

See legend on page 34.

Cooling Capacities (cont)

50A027 (27 TONS) — HOT GAS REHEAT MODE

Temp (F) Air Entering Condenser (Edb)		Air Entering Evaporator — Ewb (F)													
		75 Dry Bulb							75 Dry Bulb						
		62.5 Wet Bulb (50% RH)							65.3 Wet Bulb (60% RH)						
		Air Entering Evaporator — SCFM													
		5,400	6,750	8,100	9,450	10,800	12,150	13,500	5,400	6,750	8,100	9,450	10,800	12,150	13,500
40	TC	73	84	91	97	101	104	106	77	89	97	103	107	110	113
	SHC	–18	–6	7	18	29	41	51	–42	–33	–25	–16	–9	–1	8
	kW	18.8	17.7	17.0	16.7	16.4	16.3	16.1	19.9	18.6	17.8	17.4	17.1	16.9	16.7
	BF	0.05	0.07	0.08	0.10	0.11	0.13	0.14	0.04	0.06	0.08	0.10	0.11	0.13	0.14
50	TC	67	77	84	89	92	95	97	71	82	89	94	98	101	104
	SHC	–22	–9	2	14	25	36	47	–46	–37	–29	–21	–13	–5	3
	kW	19.3	18.2	17.5	17.2	16.9	16.7	16.6	20.4	19.1	18.3	17.9	17.6	17.3	17.2
	BF	0.05	0.07	0.08	0.10	0.11	0.13	0.14	0.04	0.06	0.08	0.10	0.11	0.13	0.14
60	TC	62	72	78	82	85	87	89	66	76	82	87	90	93	95
	SHC	–25	–13	–1	10	21	32	43	–49	–41	–33	–25	–17	–9	–1
	kW	19.9	18.7	18.0	17.7	17.4	17.2	17.1	20.9	19.6	18.8	18.4	18.1	17.8	17.7
	BF	0.05	0.07	0.08	0.10	0.11	0.13	0.14	0.04	0.06	0.08	0.10	0.11	0.13	0.14
70	TC	57	66	71	75	78	80	81	60	69	75	79	82	85	87
	SHC	–28	–16	–5	6	17	28	39	–53	–44	–36	–28	–21	–13	–5
	kW	20.5	19.3	18.6	18.2	18.0	17.8	17.6	21.6	20.2	19.4	18.9	18.6	18.4	18.2
	BF	0.05	0.07	0.08	0.10	0.11	0.13	0.14	0.04	0.06	0.08	0.10	0.11	0.13	0.14
75	TC	54	63	69	72	75	77	79	57	67	73	77	79	82	83
	SHC	–30	–18	–6	5	16	27	37	–54	–46	–38	–30	–22	–15	–7
	kW	20.9	19.6	18.9	18.5	18.3	18.1	17.9	21.9	20.5	19.7	19.2	18.9	18.7	18.5
	BF	0.05	0.07	0.08	0.10	0.11	0.13	0.14	0.04	0.06	0.08	0.10	0.11	0.13	0.14
80	TC	52	61	66	70	72	74	76	55	64	70	74	77	79	80
	SHC	–31	–19	–8	3	14	25	36	–55	–47	–39	–31	–24	–16	–8
	kW	21.2	20.0	19.3	18.9	18.6	18.4	18.2	22.2	20.8	20.0	19.6	19.2	19.0	18.8
	BF	0.05	0.07	0.08	0.10	0.11	0.13	0.14	0.04	0.06	0.08	0.10	0.11	0.13	0.14

50A027 (27 TONS) — HOT GAS REHEAT MODE (cont)

Temp (F) Air Entering Condenser (Edb)		Air Entering Evaporator — Ewb (F)													
		75 Dry Bulb							75 Dry Bulb						
		68.0 Wet Bulb (70% RH)							70.5 Wet Bulb (80% RH)						
		Air Entering Evaporator — SCFM													
		5,400	6,750	8,100	9,450	10,800	12,150	13,500	5,400	6,750	8,100	9,450	10,800	12,150	13,500
40	TC	81	94	103	109	113	117	120	85	99	108	114	119	123	126
	SHC	–66	–61	–56	–51	–46	–41	–36	–89	–87	–85	–83	–81	–79	–77
	kW	21.0	19.5	18.7	18.1	17.8	17.5	17.3	22.2	20.5	19.5	18.9	18.5	18.2	17.9
	BF	0.02	0.04	0.07	0.09	0.11	0.12	0.14	0.00	0.01	0.03	0.06	0.08	0.11	0.13
50	TC	75	86	94	100	104	108	110	78	91	99	105	110	113	116
	SHC	–70	–65	–60	–55	–50	–45	–40	–93	–91	–89	–87	–86	–83	–81
	kW	21.6	20.0	19.1	18.6	18.2	18.0	17.8	22.7	21.0	20.0	19.4	18.9	18.6	18.4
	BF	0.02	0.05	0.07	0.09	0.11	0.12	0.14	0.00	0.01	0.03	0.06	0.09	0.11	0.13
60	TC	69	79	87	92	96	99	101	72	84	92	97	101	105	107
	SHC	–73	–69	–64	–59	–54	–49	–44	–97	–95	–93	–91	–89	–87	–85
	kW	22.1	20.6	19.7	19.1	18.7	18.5	18.3	23.3	21.5	20.5	19.9	19.4	19.1	18.9
	BF	0.02	0.05	0.07	0.09	0.11	0.13	0.14	0.00	0.01	0.03	0.07	0.09	0.11	0.13
70	TC	63	73	79	84	88	91	93	66	77	84	90	94	97	99
	SHC	–76	–72	–67	–63	–58	–53	–48	–99	–98	–97	–95	–93	–91	–89
	kW	22.7	21.1	20.2	19.7	19.3	19.0	18.8	23.9	22.1	21.1	20.4	20.0	19.7	19.4
	BF	0.02	0.05	0.07	0.09	0.11	0.13	0.14	0.00	0.01	0.04	0.07	0.09	0.11	0.13
75	TC	60	70	77	81	84	87	89	63	74	80	85	89	92	94
	SHC	–78	–73	–69	–64	–60	–55	–50	–101	–100	–98	–97	–95	–93	–91
	kW	23.0	21.4	20.5	20.0	19.6	19.3	19.1	24.2	22.4	21.4	20.7	20.3	20.0	19.7
	BF	0.02	0.05	0.07	0.09	0.11	0.13	0.14	0.00	0.01	0.04	0.07	0.09	0.11	0.13
80	TC	58	68	74	78	81	83	85	60	71	78	82	86	88	91
	SHC	–80	–75	–70	–66	–61	–56	–52	–103	–101	–100	–98	–97	–95	–93
	kW	23.4	21.8	20.9	20.3	19.9	19.6	19.4	24.6	22.8	21.7	21.0	20.6	20.3	20.0
	BF	0.02	0.05	0.07	0.09	0.11	0.13	0.14	0.00	0.01	0.04	0.07	0.09	0.12	0.13

See legend on page 34.

Cooling Capacities (cont)

48/50A030 (30 TONS) — STANDARD MODE

Temp (F) Air Entering Condenser (Edb)		Evaporator Air Quantity — Cfm																			
		6,000					7,500					9,000					10,500				
		Evaporator Air — Ewb (F)																			
		75	72	67	62	57	75	72	67	62	57	75	72	67	62	57	75	72	67	62	57
75	TC	370	354	325	298	272	389	371	342	314	293	401	384	354	325	309	411	392	362	334	323
	SHC	151	169	203	234	263	157	184	224	262	287	167	196	243	288	309	176	208	261	311	323
	kW	20.2	19.9	19.5	19.2	18.8	20.6	20.3	19.8	19.4	18.9	20.9	20.6	20.1	19.6	19.3	21.1	20.7	20.2	19.8	19.5
	BF	0.00	0.00	0.12	0.10	0.10	0.00	0.19	0.12	0.11	0.20	0.13	0.16	0.13	0.12	0.26	0.22	0.16	0.14	0.14	0.34
85	TC	362	345	316	288	263	379	361	332	303	276	391	373	343	314	300	400	381	351	322	315
	SHC	147	166	199	230	257	154	180	219	257	276	164	193	238	282	300	172	204	256	305	315
	kW	22.8	22.5	22.1	21.8	21.4	23.2	22.9	22.5	22.1	21.6	23.5	23.2	22.7	22.3	22.0	23.7	23.4	22.9	22.4	22.2
	BF	0.00	0.00	0.12	0.09	0.10	0.00	0.17	0.12	0.11	0.13	0.26	0.16	0.13	0.12	0.28	0.21	0.16	0.14	0.14	0.35
95	TC	351	334	305	278	255	367	349	320	292	274	379	360	330	302	291	387	368	338	310	305
	SHC	143	162	194	225	250	151	176	214	252	274	160	188	233	277	291	168	200	251	298	305
	kW	25.7	25.5	25.1	25.1	24.7	26.1	25.9	25.5	25.3	25.0	26.4	26.2	25.8	25.4	25.1	26.7	26.3	25.9	25.4	25.3
	BF	0.00	0.10	0.11	0.09	0.12	0.00	0.16	0.12	0.10	0.21	0.23	0.15	0.13	0.12	0.30	0.19	0.15	0.14	0.15	0.37
105	TC	339	322	293	267	247	353	336	307	280	265	364	346	317	290	281	372	353	324	297	294
	SHC	138	157	189	219	242	147	171	209	246	265	155	183	228	271	281	163	195	246	291	294
	kW	29.0	28.9	29.0	29.3	28.7	29.3	29.3	29.3	29.4	29.1	29.8	29.5	29.4	29.3	29.0	30.1	29.6	29.5	29.2	29.1
	BF	0.00	0.20	0.11	0.09	0.15	0.13	0.15	0.11	0.10	0.24	0.20	0.14	0.12	0.12	0.33	0.18	0.14	0.14	0.16	0.40
115	TC	326	309	281	256	237	339	322	294	268	256	349	331	303	277	271	356	338	309	286	283
	SHC	132	153	184	214	235	142	166	204	241	256	150	178	222	264	271	158	190	240	280	283
	kW	32.8	33.1	33.8	34.3	34.3	33.3	33.4	33.8	34.2	34.0	33.8	33.5	33.8	34.0	33.8	34.1	34.0	33.8	33.5	33.7
	BF	0.00	0.16	0.10	0.08	0.16	0.24	0.13	0.11	0.10	0.26	0.18	0.13	0.12	0.13	0.35	0.17	0.14	0.13	0.19	0.42

48/50A030 (30 TONS) — STANDARD MODE (cont)

Temp (F) Air Entering Condenser (Edb)		Evaporator Air Quantity — Cfm														
		12,000					13,500					15,000				
		Evaporator Air — Ewb (F)														
		75	72	67	62	57	75	72	67	62	57	75	72	67	62	57
75	TC	419	399	369	340	336	426	406	374	347	346	430	411	379	356	354
	SHC	183	219	278	330	336	191	229	294	343	346	198	240	310	351	354
	kW	21.3	20.9	20.4	19.9	19.7	21.4	21.0	20.5	19.9	19.9	21.5	21.1	20.6	20.1	20.1
	BF	0.20	0.16	0.15	0.17	0.40	0.20	0.18	0.16	0.22	0.45	0.20	0.18	0.17	0.28	0.49
85	TC	408	388	357	329	326	414	394	362	338	336	418	398	366	344	345
	SHC	180	215	273	322	326	187	226	290	331	336	194	236	305	337	345
	kW	23.9	23.5	23.0	22.5	22.4	24.0	23.7	23.1	22.6	22.6	24.1	23.8	23.2	22.7	22.8
	BF	0.19	0.16	0.15	0.19	0.41	0.19	0.17	0.16	0.26	0.46	0.19	0.18	0.17	0.28	0.50
95	TC	394	375	344	318	316	399	380	348	328	326	403	384	352	334	334
	SHC	175	211	268	312	316	182	221	284	320	326	189	231	300	334	334
	kW	26.9	26.6	26.0	25.4	25.5	27.0	26.7	26.1	25.6	25.6	27.2	26.8	26.2	25.8	25.8
	BF	0.18	0.16	0.15	0.21	0.43	0.18	0.17	0.16	0.28	0.48	0.19	0.18	0.17	0.31	0.52
105	TC	378	359	329	307	305	383	364	334	314	314	387	367	337	322	322
	SHC	170	205	262	301	305	177	215	278	314	314	184	225	294	322	322
	kW	30.3	30.0	29.6	29.0	29.2	30.5	30.1	29.6	29.3	29.3	30.7	30.2	29.7	29.4	29.3
	BF	0.17	0.16	0.15	0.24	0.45	0.18	0.17	0.16	0.28	0.50	0.18	0.18	0.17	0.34	0.54
115	TC	361	343	314	295	293	366	347	318	302	302	369	351	321	310	309
	SHC	165	200	257	290	293	172	210	272	302	302	179	220	288	310	309
	kW	34.4	34.2	33.9	33.4	33.6	34.7	34.3	33.9	33.6	33.6	34.9	34.4	33.9	33.7	33.7
	BF	0.17	0.16	0.15	0.26	0.47	0.17	0.17	0.16	0.31	0.52	0.18	0.18	0.18	0.36	0.56

See legend on page 34.

Cooling Capacities (cont)

48/50A030 (30 TONS) — SUBCOOLING MODE

Temp (F) Air Entering Condenser (Edb)		Evaporator Air Quantity – SCFM																			
		6,000					7,500					9,000					10,500				
		Evaporator Air Ewb (F)																			
		75	72	67	62	57	75	72	67	62	57	75	72	67	62	57	75	72	67	62	57
75	TC	347	329	302	276	248	360	342	314	292	265	373	355	329	304	285	387	367	337	313	298
	SHC	126	146	178	208	234	132	155	193	235	260	140	167	215	260	285	152	181	231	282	298
	kW	19.8	19.4	18.9	18.5	18.1	20.1	19.7	19.2	18.8	18.3	20.3	20.0	19.4	19.0	18.7	20.6	20.2	19.6	19.1	18.9
	BF	0.00	0.05	0.09	0.10	0.11	0.02	0.09	0.11	0.12	0.17	0.08	0.12	0.14	0.14	0.25	0.12	0.15	0.16	0.17	0.33
85	TC	326	309	285	262	239	345	322	301	277	251	354	337	311	287	271	365	347	318	295	285
	SHC	109	130	164	197	226	121	139	183	223	247	126	153	200	246	271	135	165	215	267	285
	kW	22.0	21.6	21.2	20.8	20.5	22.3	21.9	21.4	21.0	20.6	22.5	22.2	21.6	21.2	21.0	22.7	22.4	21.8	21.3	21.2
	BF	0.00	0.05	0.09	0.09	0.11	0.03	0.10	0.11	0.12	0.18	0.08	0.12	0.14	0.14	0.27	0.12	0.15	0.16	0.17	0.34
95	TC	309	294	267	243	224	325	308	282	259	242	335	319	293	270	252	343	327	300	276	269
	SHC	97	118	149	182	214	105	129	168	209	239	112	140	186	232	252	119	150	202	251	269
	kW	24.6	24.2	23.8	23.4	23.1	24.9	24.5	24.0	23.6	23.4	25.1	24.7	24.2	23.8	23.5	25.3	24.9	24.3	23.9	23.8
	BF	0.00	0.06	0.09	0.09	0.11	0.04	0.10	0.11	0.12	0.19	0.09	0.13	0.14	0.14	0.28	0.12	0.15	0.16	0.17	0.35
105	TC	295	257	236	228	210	305	278	264	242	227	315	295	274	252	241	323	307	284	259	253
	SHC	87	86	122	170	201	90	103	155	195	225	97	121	172	219	241	104	135	191	239	253
	kW	27.6	26.9	26.5	26.4	26.3	27.8	27.3	27.0	26.6	26.4	28.0	27.6	27.2	26.8	26.6	28.2	27.8	27.3	26.9	26.8
	BF	0.00	0.06	0.09	0.09	0.13	0.04	0.10	0.11	0.12	0.21	0.09	0.13	0.14	0.15	0.29	0.13	0.15	0.16	0.17	0.37
115	TC	271	254	233	212	196	274	268	246	223	207	293	279	256	233	224	287	286	262	241	235
	SHC	69	88	124	157	187	66	99	141	180	207	81	111	159	203	224	73	120	174	220	235
	kW	30.9	30.6	30.3	30.0	29.9	31.0	30.8	30.4	30.1	29.9	31.4	31.0	30.5	30.2	30.1	31.2	31.1	30.6	30.2	30.2
	BF	0.01	0.07	0.09	0.09	0.15	0.05	0.10	0.11	0.12	0.21	0.10	0.13	0.14	0.15	0.31	0.13	0.15	0.16	0.20	0.38

48/50A030 (30 TONS) — SUBCOOLING MODE (cont)

Temp (F) Air Entering Condenser (Edb)		Evaporator Air Quantity – SCFM														
		12,000					13,500					15,000				
		Evaporator Air Ewb (F)														
		75	72	67	62	57	75	72	67	62	57	75	72	67	62	57
75	TC	395	375	346	320	313	396	381	348	321	322	401	387	355	328	326
	SHC	159	192	248	301	313	160	202	260	311	322	166	211	277	324	326
	kW	20.8	20.4	19.8	19.3	19.1	20.8	20.5	19.8	19.3	19.3	20.9	20.6	19.9	19.4	19.4
	BF	0.14	0.17	0.18	0.20	0.39	0.17	0.19	0.19	0.24	0.45	0.19	0.21	0.21	0.28	0.49
85	TC	369	352	324	298	296	378	357	330	309	306	379	362	334	315	312
	SHC	139	174	231	284	296	149	183	246	300	306	151	192	261	314	312
	kW	22.9	22.5	21.9	21.4	21.4	23.0	22.6	22.0	21.6	21.5	23.1	22.7	22.1	21.7	21.6
	BF	0.15	0.17	0.18	0.19	0.40	0.17	0.19	0.19	0.25	0.45	0.19	0.21	0.21	0.28	0.50
95	TC	350	333	307	285	280	354	338	311	289	286	359	342	315	294	296
	SHC	125	159	218	270	280	130	169	233	280	286	137	178	247	294	296
	kW	25.4	25.0	24.5	24.0	24.0	25.5	25.1	24.6	24.1	24.1	25.6	25.2	24.6	24.2	24.2
	BF	0.15	0.17	0.18	0.21	0.41	0.17	0.19	0.19	0.26	0.46	0.19	0.21	0.21	0.29	0.51
105	TC	331	315	273	266	260	337	301	294	274	271	341	321	296	278	277
	SHC	112	147	189	252	260	119	137	221	267	271	124	162	233	278	277
	kW	28.4	28.0	27.2	27.0	26.9	28.5	27.8	27.5	27.1	27.1	28.6	28.1	27.5	27.2	27.2
	BF	0.15	0.17	0.18	0.23	0.43	0.17	0.19	0.19	0.27	0.48	0.19	0.21	0.21	0.31	0.52
115	TC	307	291	268	248	243	311	295	271	254	251	313	299	274	258	258
	SHC	94	129	190	235	243	99	138	203	248	251	104	147	217	258	258
	kW	31.7	31.3	30.7	30.3	30.3	31.8	31.4	30.8	30.4	30.4	31.9	31.4	30.8	30.5	30.5
	BF	0.15	0.17	0.17	0.24	0.44	0.18	0.19	0.19	0.28	0.49	0.20	0.21	0.21	0.32	0.53

See legend on page 34.

Cooling Capacities (cont)

50A030 (30 TONS) — HOT GAS REHEAT MODE

Temp (F) Air Entering Condenser (Edb)		Air Entering Evaporator — Ewb (F)													
		75 Dry Bulb							75 Dry Bulb						
		62.5 Wet Bulb (50% RH)							65.3 Wet Bulb (60% RH)						
		Air Entering Evaporator — SCFM													
		6,000	7,500	9,000	10,500	12,000	13,500	15,000	6,000	7,500	9,000	10,500	12,000	13,500	15,000
40	TC	138	148	154	159	164	167	169	145	155	162	168	172	176	179
	SHC	35	48	61	73	86	99	111	10	19	28	38	47	56	66
	kW	17.0	16.7	16.6	16.5	16.5	16.5	16.5	17.8	17.4	17.3	17.2	17.1	17.1	17.1
	BF	0.07	0.09	0.11	0.12	0.14	0.16	0.17	0.06	0.08	0.10	0.12	0.14	0.16	0.17
50	TC	133	142	149	153	157	159	161	139	149	156	161	165	168	170
	SHC	31	44	57	70	83	95	107	7	16	25	34	43	52	62
	kW	17.9	17.5	17.4	17.3	17.3	17.3	17.3	18.7	18.2	18.1	18.0	17.9	17.9	17.9
	BF	0.07	0.09	0.11	0.12	0.14	0.16	0.17	0.06	0.08	0.10	0.12	0.14	0.16	0.17
60	TC	127	136	142	147	150	153	155	133	143	150	154	158	161	163
	SHC	28	41	54	67	79	92	104	3	12	21	30	40	49	58
	kW	18.8	18.5	18.3	18.2	18.2	18.2	18.1	19.6	19.2	19.0	18.8	18.8	18.7	18.7
	BF	0.07	0.09	0.11	0.12	0.14	0.16	0.17	0.06	0.08	0.10	0.12	0.14	0.16	0.17
70	TC	120	129	135	140	143	145	147	127	136	143	147	151	153	155
	SHC	24	37	50	63	75	88	100	0	9	18	27	36	45	54
	kW	19.9	19.5	19.3	19.2	19.2	19.1	19.1	20.7	20.2	20.0	19.8	19.8	19.7	19.7
	BF	0.07	0.09	0.11	0.12	0.14	0.16	0.17	0.06	0.08	0.10	0.12	0.14	0.16	0.17
75	TC	117	126	132	136	139	142	143	124	133	139	143	147	149	151
	SHC	22	35	48	61	74	86	98	–2	7	16	25	34	43	52
	kW	20.5	20.1	19.9	19.8	19.7	19.7	19.7	21.3	20.8	20.5	20.4	20.3	20.2	20.2
	BF	0.07	0.09	0.11	0.12	0.14	0.16	0.17	0.06	0.08	0.10	0.12	0.14	0.16	0.17
80	TC	114	123	128	133	136	138	139	120	129	135	140	143	145	147
	SHC	20	33	46	59	72	84	96	–4	5	14	23	32	41	51
	kW	21.1	20.7	20.5	20.4	20.3	20.3	20.2	21.9	21.4	21.1	21.0	20.9	20.8	20.8
	BF	0.07	0.09	0.11	0.12	0.14	0.16	0.17	0.06	0.08	0.10	0.12	0.14	0.16	0.17

50A030 (30 TONS) — HOT GAS REHEAT MODE (cont)

Temp (F) Air Entering Condenser (Edb)		Air Entering Evaporator — Ewb (F)													
		75 Dry Bulb							75 Dry Bulb						
		68.0 Wet Bulb (70% RH)							70.5 Wet Bulb (80% RH)						
		Air Entering Evaporator — SCFM													
		6,000	7,500	9,000	10,500	12,000	13,500	15,000	6,000	7,500	9,000	10,500	12,000	13,500	15,000
40	TC	151	162	170	176	181	185	188	158	170	178	184	189	193	196
	SHC	–14	–9	–3	2	8	14	20	–38	–35	–33	–31	–28	–25	–22
	kW	18.6	18.2	18.0	17.8	17.8	17.7	17.7	19.5	19.0	18.7	18.5	18.4	18.3	18.3
	BF	0.02	0.06	0.09	0.12	0.14	0.16	0.17	0.00	0.00	0.04	0.08	0.11	0.14	0.16
50	TC	146	156	163	169	173	176	179	152	163	171	176	181	184	187
	SHC	–17	–12	–7	–1	4	10	16	–41	–39	–37	–34	–32	–29	–26
	kW	19.5	19.0	18.7	18.6	18.5	18.5	18.4	20.4	19.8	19.4	19.3	19.2	19.1	19.0
	BF	0.02	0.06	0.09	0.12	0.14	0.16	0.17	0.00	0.00	0.05	0.09	0.11	0.14	0.16
60	TC	140	150	157	162	166	169	171	146	156	164	169	173	176	179
	SHC	–21	–16	–10	–5	1	7	13	–44	–42	–40	–38	–35	–33	–30
	kW	20.4	19.9	19.6	19.5	19.4	19.3	19.3	21.3	20.7	20.3	20.1	20.0	19.9	19.9
	BF	0.03	0.07	0.09	0.12	0.14	0.16	0.17	0.00	0.00	0.05	0.09	0.12	0.14	0.16
70	TC	133	143	150	155	158	161	163	139	150	157	162	166	169	171
	SHC	–24	–19	–14	–8	–3	3	9	–48	–45	–44	–41	–39	–36	–33
	kW	21.5	20.9	20.6	20.5	20.4	20.3	20.2	22.3	21.7	21.3	21.1	21.0	20.9	20.8
	BF	0.03	0.07	0.09	0.12	0.14	0.16	0.17	0.00	0.01	0.06	0.09	0.12	0.14	0.16
75	TC	130	140	146	151	154	157	159	136	146	153	158	162	165	167
	SHC	–26	–21	–16	–10	–5	1	7	–49	–47	–45	–43	–41	–38	–35
	kW	22.1	21.5	21.2	21.0	20.9	20.8	20.8	22.9	22.2	21.9	21.6	21.5	21.4	21.4
	BF	0.04	0.07	0.09	0.12	0.14	0.16	0.17	0.00	0.01	0.06	0.09	0.12	0.14	0.16
80	TC	127	136	142	147	150	153	155	132	142	149	154	158	161	163
	SHC	–28	–23	–18	–12	–6	–1	5	–51	–49	–47	–45	–43	–40	–37
	kW	22.7	22.1	21.8	21.6	21.5	21.4	21.4	23.5	22.8	22.4	22.2	22.1	22.0	21.9
	BF	0.04	0.07	0.10	0.12	0.14	0.16	0.17	0.00	0.02	0.06	0.09	0.12	0.14	0.16

See legend on page 34.

Cooling Capacities (cont)

48/50A035 (35 TONS) — STANDARD MODE

Temp (F) Air Entering Condenser (Edb)		Evaporator Air Quantity — Cfm																			
		7,000					8,750					10,500					12,250				
		Evaporator Air — Ewb (F)																			
		75	72	67	62	57	75	72	67	62	57	75	72	67	62	57	75	72	67	62	57
75	TC	442	423	394	366	338	459	440	410	383	363	471	452	421	395	383	479	460	430	403	399
	SHC	179	206	250	291	329	189	222	275	327	363	199	237	299	359	383	208	252	323	389	399
	kW	24.8	24.3	23.6	23.2	23.1	25.3	24.7	24.0	23.4	23.2	25.6	25.1	24.3	23.6	23.4	25.8	25.3	24.5	23.8	23.7
	BF	0.00	0.00	0.00	0.01	0.02	0.00	0.00	0.01	0.01	0.10	0.01	0.01	0.01	0.02	0.21	0.01	0.02	0.02	0.04	0.29
85	TC	428	412	384	354	326	444	426	399	372	352	455	437	410	384	374	463	444	417	393	389
	SHC	174	201	245	285	322	184	217	270	321	352	193	231	294	354	374	203	246	318	384	389
	kW	27.8	27.3	26.9	26.7	27.0	28.2	27.7	27.1	26.8	26.7	28.5	28.0	27.3	26.9	26.8	28.8	28.2	27.5	27.0	26.9
	BF	0.00	0.00	0.01	0.01	0.02	0.00	0.00	0.01	0.01	0.13	0.01	0.01	0.01	0.03	0.23	0.02	0.02	0.02	0.05	0.31
95	TC	417	400	371	341	312	432	415	387	358	341	441	424	397	370	362	447	431	405	380	378
	SHC	170	197	239	279	312	179	212	265	314	341	188	227	289	348	362	197	241	313	376	378
	kW	31.3	31.1	30.8	31.3	32.9	31.6	31.2	30.9	30.8	31.2	31.9	31.4	31.0	30.8	30.7	32.1	31.6	31.0	30.8	30.8
	BF	0.00	0.00	0.01	0.01	0.03	0.00	0.00	0.01	0.01	0.16	0.01	0.01	0.02	0.03	0.25	0.02	0.02	0.02	0.05	0.33
105	TC	403	385	356	325	308	417	400	372	343	328	427	410	381	355	349	433	417	389	365	365
	SHC	165	191	232	271	308	174	207	258	307	328	184	222	283	340	349	193	236	307	365	365
	kW	35.5	35.4	36.0	37.7	39.3	35.7	35.5	35.5	36.5	37.4	35.9	35.5	35.3	35.8	36.1	36.0	35.6	35.3	35.5	35.5
	BF	0.00	0.00	0.01	0.01	0.12	0.00	0.01	0.01	0.02	0.19	0.01	0.01	0.02	0.03	0.28	0.02	0.02	0.02	0.07	0.35
115	TC	380	364	337	—	—	391	376	351	—	—	398	384	360	335	332	403	389	366	347	347
	SHC	156	182	224	—	—	165	198	250	—	—	174	213	274	330	332	183	227	298	347	347
	kW	39.4	39.7	40.9	—	—	39.5	39.5	40.1	—	—	39.5	39.4	39.8	40.9	41.1	39.6	39.4	39.6	40.2	40.2
	BF	0.00	0.00	0.01	—	—	0.00	0.01	0.01	—	—	0.01	0.01	0.02	0.04	0.31	0.01	0.02	0.02	0.12	0.39

48/50A035 (35 TONS) — STANDARD MODE (cont)

Temp (F) Air Entering Condenser (Edb)		Evaporator Air Quantity — Cfm														
		14,000					15,750					17,500				
		Evaporator Air — Ewb (F)														
		75	72	67	62	57	75	72	67	62	57	75	72	67	62	57
75	TC	485	466	436	412	411	490	471	442	422	422	—	475	446	432	432
	SHC	217	266	347	411	411	226	281	369	422	422	—	295	391	432	432
	kW	26.0	25.5	24.7	24.0	24.0	26.1	25.6	24.8	24.3	24.3	—	25.7	24.9	24.5	24.5
	BF	0.02	0.02	0.03	0.09	0.36	0.03	0.03	0.04	0.17	0.42	—	0.04	0.05	0.23	0.46
85	TC	469	451	422	402	401	—	455	426	411	411	—	459	431	419	419
	SHC	212	261	341	402	401	—	275	363	411	411	—	290	384	419	419
	kW	29.0	28.4	27.6	27.1	27.1	—	28.6	27.7	27.3	27.3	—	28.7	27.8	27.5	27.5
	BF	0.02	0.02	0.03	0.11	0.38	—	0.03	0.04	0.19	0.43	—	0.04	0.05	0.26	0.48
95	TC	—	436	410	391	390	—	439	414	401	400	—	443	418	409	408
	SHC	—	256	336	391	390	—	270	358	401	400	—	284	379	409	408
	kW	—	31.7	31.1	30.9	30.9	—	31.8	31.2	31.0	31.0	—	31.9	31.3	31.1	31.1
	BF	—	0.02	0.03	0.13	0.39	—	0.03	0.04	0.21	0.45	—	0.04	0.06	0.27	0.49
105	TC	—	421	394	377	377	—	425	399	387	386	—	428	403	395	395
	SHC	—	251	330	377	377	—	265	352	387	386	—	279	373	395	395
	kW	—	35.7	35.3	35.3	35.3	—	35.7	35.3	35.2	35.2	—	35.8	35.3	35.3	35.3
	BF	—	0.03	0.03	0.16	0.42	—	0.03	0.04	0.24	0.47	—	0.04	0.06	0.30	0.51
115	TC	—	393	371	358	358	—	396	375	367	367	—	399	378	374	374
	SHC	—	242	321	358	358	—	256	342	367	367	—	270	362	374	374
	kW	—	39.4	39.4	39.7	39.7	—	39.5	39.4	39.5	39.5	—	39.5	39.3	39.4	39.4
	BF	—	0.02	0.03	0.21	0.45	—	0.03	0.05	0.28	0.49	—	0.04	0.07	0.34	0.54

See legend on page 34.

Cooling Capacities (cont)

48/50A035 (35 TONS) — SUBCOOLING MODE

Temp (F) Air Entering Condenser (Edb)		Evaporator Air Quantity – SCFM																			
		7,000					8,750					10,500					12,250				
		Evaporator Air Ewb (F)																			
		75	72	67	62	57	75	72	67	62	57	75	72	67	62	57	75	72	67	62	57
75	TC	413	378	346	305	268	417	409	369	329	286	450	404	385	346	318	460	433	389	360	345
	SHC	132	145	188	220	249	125	171	216	259	282	153	166	242	294	318	161	199	260	327	345
	kW	23.6	23.0	22.8	22.3	22.0	23.7	23.5	23.0	22.6	21.7	24.1	23.4	23.2	22.7	22.2	24.3	23.9	23.2	22.9	22.8
	BF	0.00	0.00	0.02	0.02	0.03	0.00	0.02	0.02	0.03	0.09	0.02	0.03	0.03	0.04	0.18	0.04	0.04	0.04	0.06	0.27
85	TC	373	356	316	277	240	397	353	337	288	257	393	386	351	314	291	402	377	343	327	304
	SHC	96	126	161	194	224	109	119	187	221	254	101	152	212	265	291	107	146	217	297	304
	kW	25.9	25.8	25.3	25.0	24.7	26.3	25.6	25.5	24.7	24.2	26.3	26.1	25.7	25.2	24.9	26.5	26.0	25.5	25.4	24.9
	BF	0.00	0.01	0.02	0.02	0.03	0.00	0.02	0.02	0.03	0.10	0.02	0.03	0.03	0.04	0.19	0.04	0.04	0.04	0.07	0.28
95	TC	347	324	285	246	200	344	320	303	267	222	355	329	297	280	263	361	337	303	292	272
	SHC	75	98	134	167	184	61	90	158	203	220	67	100	162	235	263	72	112	181	265	272
	kW	29.0	28.7	28.2	27.9	26.8	28.9	28.5	28.4	28.0	27.2	29.1	28.6	28.2	28.1	28.0	29.3	28.8	28.2	28.2	27.8
	BF	0.00	0.01	0.02	0.02	0.05	0.01	0.02	0.02	0.03	0.11	0.02	0.03	0.03	0.05	0.21	0.04	0.04	0.04	0.07	0.29
105	TC	306	281	253	214	182	307	278	269	234	206	314	313	249	247	231	319	296	284	259	250
	SHC	38	60	106	139	168	30	53	129	174	206	31	89	119	206	231	35	75	167	233	250
	kW	32.1	31.7	31.6	31.3	31.2	32.1	31.5	31.7	31.4	31.2	32.3	32.3	31.1	31.5	31.4	32.4	31.9	31.8	31.6	31.5
	BF	0.00	0.01	0.02	0.02	0.07	0.01	0.02	0.02	0.03	0.13	0.02	0.03	0.03	0.05	0.23	0.04	0.04	0.04	0.09	0.31
115	TC	281	249	221	173	143	291	242	226	201	165	272	251	219	213	172	275	253	247	223	204
	SHC	20	34	79	102	130	19	23	91	146	165	–4	33	95	175	172	–3	39	136	199	204
	kW	36.5	35.7	35.7	34.8	34.6	36.5	35.3	35.2	35.5	34.6	36.0	35.4	34.9	35.5	34.4	36.1	35.5	35.5	35.4	34.9
	BF	0.00	0.01	0.02	0.02	0.09	0.01	0.02	0.02	0.03	0.15	0.02	0.03	0.03	0.06	0.24	0.04	0.04	0.04	0.11	0.32

48/50A035 (35 TONS) — SUBCOOLING MODE (cont)

Temp (F) Air Entering Condenser (Edb)		Evaporator Air Quantity – SCFM														
		14,000					15,750					17,500				
		Evaporator Air Ewb (F)														
		75	72	67	62	57	75	72	67	62	57	75	72	67	62	57
75	TC	452	443	399	372	365	460	434	410	383	381	465	438	414	384	394
	SHC	154	214	284	356	365	163	213	311	379	381	171	225	330	384	394
	kW	24.2	24.0	23.4	23.1	23.0	24.4	24.0	23.5	23.2	23.2	24.5	24.1	23.6	23.1	23.4
	BF	0.05	0.05	0.05	0.10	0.34	0.06	0.06	0.07	0.14	0.39	0.08	0.07	0.08	0.20	0.44
85	TC	409	384	351	338	333	415	391	371	349	337	420	394	378	350	358
	SHC	115	159	240	323	333	123	175	276	345	337	131	185	299	350	358
	kW	26.6	26.2	25.7	25.5	25.5	26.8	26.3	25.9	25.7	25.4	26.9	26.4	26.1	25.6	25.9
	BF	0.05	0.05	0.05	0.11	0.35	0.06	0.06	0.07	0.15	0.40	0.08	0.07	0.08	0.21	0.45
95	TC	367	342	299	304	299	371	347	313	304	303	374	351	318	316	323
	SHC	78	122	193	290	299	84	135	221	301	303	91	147	242	316	323
	kW	29.4	28.9	28.1	28.4	28.3	29.5	29.0	28.4	28.3	28.2	29.6	29.1	28.5	28.4	28.6
	BF	0.05	0.05	0.05	0.12	0.36	0.06	0.06	0.07	0.17	0.41	0.08	0.07	0.08	0.22	0.46
105	TC	320	299	291	260	254	325	302	268	278	275	328	305	262	287	281
	SHC	37	85	189	247	254	44	95	182	276	275	50	107	191	287	281
	kW	32.5	32.0	31.9	31.4	31.3	32.7	32.0	31.4	31.8	31.7	32.8	32.1	31.3	31.9	31.7
	BF	0.05	0.05	0.06	0.13	0.37	0.07	0.06	0.07	0.18	0.42	0.08	0.07	0.08	0.24	0.47
115	TC	277	256	227	234	229	279	257	268	238	240	278	256	270	243	249
	SHC	0	48	130	222	229	4	57	188	238	240	7	64	205	243	249
	kW	36.2	35.5	34.9	35.5	35.5	36.4	35.6	36.1	35.5	35.5	36.5	35.6	36.0	35.4	35.6
	BF	0.05	0.05	0.06	0.15	0.38	0.07	0.06	0.07	0.19	0.44	0.08	0.07	0.09	0.26	0.48

See legend on page 34.

Cooling Capacities (cont)

50A035 (35 TONS) — HOT GAS REHEAT MODE

Temp (F) Air Entering Condenser (Edb)		Air Entering Evaporator — Ewb (F)													
		75 Dry Bulb							75 Dry Bulb						
		62.5 Wet Bulb (50% RH)							65.3 Wet Bulb (60% RH)						
		Air Entering Evaporator — SCFM													
		7,000	8,750	10,500	12,250	14,000	15,750	17,500	7,000	8,750	10,500	12,250	14,000	15,750	17,500
40	TC	162	170	176	180	184	186	189	173	182	188	193	197	200	202
	SHC	46	61	77	94	111	128	144	18	27	37	48	60	71	83
	kW	23.4	23.0	22.8	22.7	22.6	22.5	22.4	24.6	24.2	23.9	23.7	23.6	23.5	23.4
	BF	0.00	0.01	0.01	0.02	0.03	0.04	0.05	0.00	0.01	0.01	0.02	0.03	0.04	0.05
50	TC	143	151	156	160	163	165	167	155	163	169	173	177	179	181
	SHC	31	45	61	78	95	111	128	3	12	22	32	44	55	67
	kW	24.1	23.8	23.6	23.4	23.3	23.2	23.2	25.4	24.9	24.7	24.5	24.3	24.3	24.2
	BF	0.00	0.01	0.01	0.02	0.03	0.04	0.05	0.00	0.01	0.01	0.02	0.03	0.04	0.05
60	TC	125	132	137	140	142	144	146	137	144	150	153	156	158	160
	SHC	15	29	45	62	78	95	111	–12	–4	6	16	28	39	51
	kW	24.9	24.6	24.4	24.2	24.1	24.1	24.0	26.2	25.8	25.5	25.3	25.2	25.1	25.0
	BF	0.00	0.01	0.01	0.02	0.03	0.04	0.05	0.00	0.01	0.01	0.02	0.03	0.04	0.05
70	TC	108	114	118	121	123	125	126	118	125	129	132	135	137	139
	SHC	–1	14	29	46	62	79	95	–27	–20	–10	0	11	23	35
	kW	24.8	25.5	25.3	25.1	25.0	25.0	24.9	27.2	26.7	26.4	26.2	26.1	26.0	25.9
	BF	0.01	0.01	0.01	0.02	0.03	0.04	0.05	0.00	0.01	0.01	0.02	0.03	0.04	0.05
75	TC	99	105	108	111	113	114	116	109	115	119	122	125	127	128
	SHC	–7	6	21	38	54	71	87	–35	–27	–18	–8	4	15	27
	kW	26.4	26.0	25.8	25.6	25.5	25.4	25.4	27.7	27.2	26.9	26.7	26.6	26.5	26.4
	BF	0.00	0.01	0.01	0.02	0.03	0.04	0.05	0.00	0.01	0.01	0.02	0.03	0.04	0.05
80	TC	90	96	99	101	103	104	106	100	106	110	112	115	117	118
	SHC	–15	–1	14	30	46	63	78	–43	–35	–26	–16	–4	7	19
	kW	26.9	26.5	26.3	26.2	26.0	26.0	25.9	28.2	27.7	27.4	27.2	27.1	27.0	26.9
	BF	0.00	0.01	0.01	0.02	0.03	0.04	0.05	0.00	0.01	0.01	0.02	0.03	0.04	0.05

50A035 (35 TONS) — HOT GAS REHEAT MODE (cont)

Temp (F) Air Entering Condenser (Edb)		Air Entering Evaporator — Ewb (F)													
		75 Dry Bulb							75 Dry Bulb						
		68.0 Wet Bulb (70% RH)							70.5 Wet Bulb (80% RH)						
		Air Entering Evaporator — SCFM													
		7,000	8,750	10,500	12,250	14,000	15,750	17,500	7,000	8,750	10,500	12,250	14,000	15,750	17,500
40	TC	184	193	200	205	209	212	215	193	204	211	215	220	222	223
	SHC	–10	–8	–4	1	7	13	19	–39	–42	–44	–44	–42	–40	–38
	kW	26.2	25.6	25.4	25.2	25.2	25.1	25.2	28.1	27.7	27.5	27.6	27.8	28.1	28.6
	BF	0.00	0.01	0.02	0.03	0.04	0.06	0.07	0.00	0.00	0.01	0.03	0.05	0.07	0.09
50	TC	165	175	181	185	189	192	195	175	184	191	196	201	203	204
	SHC	–25	–23	–20	–15	–9	–3	4	–54	–58	–60	–59	–58	–56	–54
	kW	26.9	26.4	26.1	26.0	25.9	25.9	25.9	28.8	28.4	28.2	28.3	28.5	28.8	29.2
	BF	0.00	0.01	0.02	0.03	0.04	0.05	0.07	0.00	0.00	0.01	0.03	0.05	0.07	0.09
60	TC	147	155	161	165	169	172	175	157	165	172	177	181	183	184
	SHC	–41	–39	–35	–31	–25	–19	–12	–69	–73	–75	–75	–73	–72	–70
	kW	27.8	27.2	26.9	26.8	26.7	26.7	26.7	29.7	29.2	29.0	29.1	29.3	29.6	30.0
	BF	0.00	0.01	0.02	0.03	0.04	0.05	0.07	0.00	0.00	0.01	0.03	0.05	0.07	0.09
70	TC	129	136	141	145	149	152	154	138	146	152	157	160	162	162
	SHC	–56	–55	–51	–46	–41	–35	–28	–84	–89	–90	–90	–89	–88	–86
	kW	28.7	28.2	27.8	27.7	27.6	27.6	27.7	30.6	30.1	29.9	30.0	30.2	30.5	30.9
	BF	0.00	0.01	0.02	0.03	0.04	0.05	0.07	0.00	0.00	0.01	0.03	0.05	0.07	0.09
75	TC	119	126	131	135	139	141	143	129	137	142	147	150	151	152
	SHC	–64	–62	–59	–54	–49	–43	–36	–92	–96	–98	–98	–97	–96	–94
	kW	29.2	28.7	28.3	28.2	28.1	28.1	28.1	31.1	30.6	30.4	30.5	30.7	31.0	31.3
	BF	0.00	0.01	0.02	0.03	0.04	0.05	0.07	0.00	0.00	0.01	0.03	0.05	0.07	0.09
80	TC	110	117	122	125	128	131	133	119	127	133	137	139	141	141
	SHC	–71	–70	–67	–62	–57	–51	–44	–99	–104	–106	–106	–105	–104	–102
	kW	29.7	29.2	28.9	28.7	28.6	28.6	28.7	31.6	31.1	30.9	31.0	31.2	31.5	31.8
	BF	0.00	0.01	0.02	0.03	0.04	0.05	0.07	0.00	0.00	0.01	0.03	0.05	0.07	0.09

See legend on page 34.

Cooling Capacities (cont)

48/50A040 (40 TONS) — STANDARD MODE

Temp (F) Air Entering Condenser (Edb)		Evaporator Air Quantity — Cfm																			
		8,000					10,000					12,000					14,000				
		Evaporator Air — Ewb (F)																			
		75	72	67	62	57	75	72	67	62	57	75	72	67	62	57	75	72	67	62	57
75	TC	517	495	459	423	388	542	518	482	445	415	558	533	498	461	439	570	546	509	473	460
	SHC	206	235	284	330	371	216	253	313	370	408	228	270	341	408	439	239	287	368	441	460
	kW	25.9	25.5	25.0	24.7	24.3	26.3	25.9	25.4	25.0	24.5	26.6	26.2	25.6	25.2	24.8	26.8	26.4	25.8	25.3	25.1
	BF	0.00	0.00	0.06	0.04	0.05	0.00	0.10	0.06	0.05	0.13	0.15	0.08	0.06	0.06	0.20	0.11	0.08	0.07	0.08	0.29
85	TC	503	481	446	410	376	525	504	467	431	405	541	519	483	447	427	552	531	494	458	448
	SHC	199	230	278	325	364	210	248	307	363	397	222	265	335	400	427	233	282	362	434	448
	kW	29.2	28.8	28.5	28.0	27.7	29.6	29.3	28.8	28.4	27.9	29.9	29.5	29.0	28.6	28.3	30.1	29.7	29.2	28.7	28.5
	BF	0.00	0.13	0.06	0.03	0.05	0.00	0.09	0.06	0.05	0.16	0.13	0.08	0.06	0.06	0.23	0.10	0.08	0.07	0.08	0.31
95	TC	489	467	431	395	363	510	488	452	416	390	525	503	466	429	414	536	514	477	442	434
	SHC	193	224	272	317	356	205	242	301	356	390	217	260	328	392	414	228	276	355	425	434
	kW	33.0	32.6	32.3	32.0	31.7	33.4	33.1	32.6	32.3	31.8	33.7	33.4	32.9	32.5	32.1	33.9	33.5	33.0	32.6	32.4
	BF	0.00	0.10	0.05	0.04	0.06	0.10	0.08	0.05	0.05	0.15	0.11	0.08	0.06	0.06	0.25	0.10	0.08	0.07	0.09	0.33
105	TC	473	451	414	381	350	492	470	434	399	378	506	484	447	412	401	516	493	457	423	419
	SHC	187	218	264	311	346	200	236	293	348	378	211	253	321	384	401	221	269	347	414	419
	kW	37.2	36.8	36.8	36.2	36.5	37.6	37.4	37.0	37.0	36.6	37.9	37.6	37.2	37.1	36.7	38.1	37.8	37.4	37.0	36.8
	BF	0.00	0.08	0.05	0.03	0.07	0.15	0.08	0.05	0.05	0.18	0.10	0.07	0.06	0.07	0.27	0.09	0.08	0.07	0.10	0.35
115	TC	453	432	397	364	337	471	450	415	381	364	483	462	427	394	386	492	472	436	405	403
	SHC	180	211	257	302	332	193	228	286	340	364	204	245	313	375	386	214	262	339	402	403
	kW	42.0	41.4	42.2	42.1	41.8	42.5	42.4	42.4	42.5	42.2	42.6	42.6	42.5	42.5	42.2	42.8	42.8	42.7	42.3	42.2
	BF	0.00	0.07	0.05	0.03	0.11	0.12	0.07	0.05	0.05	0.21	0.09	0.07	0.06	0.07	0.30	0.08	0.07	0.06	0.11	0.37
120	TC	442	422	389	354	330	460	440	405	372	356	473	451	417	384	378	481	460	425	395	395
	SHC	177	207	255	297	327	189	225	281	336	356	200	241	309	369	378	211	258	335	395	395
	kW	44.6	44.8	44.1	45.8	45.1	45.2	45.3	45.3	45.2	45.2	45.5	45.4	45.4	45.4	45.2	45.6	45.6	45.6	45.2	45.2
	BF	0.00	0.07	0.03	0.04	0.12	0.11	0.07	0.05	0.04	0.23	0.09	0.07	0.06	0.07	0.32	0.08	0.07	0.06	0.12	0.39

48/50A040 (40 TONS) — STANDARD MODE (cont)

Temp (F) Air Entering Condenser (Edb)		Evaporator Air Quantity — Cfm														
		16,000					18,000					20,000				
		Evaporator Air — Ewb (F)														
		75	72	67	62	57	75	72	67	62	57	75	72	67	62	57
75	TC	579	555	519	483	477	587	563	526	491	491	593	569	532	504	503
	SHC	249	304	394	470	477	259	320	419	491	491	269	335	443	499	503
	kW	26.9	26.5	25.9	25.4	25.3	27.1	26.6	26.1	25.5	25.5	27.2	26.7	26.1	25.7	25.7
	BF	0.10	0.09	0.07	0.11	0.35	0.11	0.09	0.08	0.15	0.41	0.11	0.10	0.09	0.23	0.45
85	TC	560	539	503	468	464	568	546	510	479	478	574	552	515	491	489
	SHC	243	298	388	461	464	253	314	412	476	478	263	330	437	486	489
	kW	30.2	29.9	29.3	28.8	28.7	30.4	30.0	29.4	28.9	28.9	30.5	30.1	29.5	29.1	29.1
	BF	0.10	0.09	0.07	0.12	0.37	0.11	0.09	0.09	0.18	0.42	0.11	0.09	0.09	0.25	0.47
95	TC	543	522	485	451	450	551	528	492	465	463	556	534	497	477	475
	SHC	238	292	380	449	450	248	308	405	458	463	258	324	427	465	475
	kW	34.0	33.7	33.2	32.6	32.6	34.1	33.8	33.3	32.8	32.8	34.2	33.9	33.4	32.9	32.9
	BF	0.09	0.08	0.08	0.13	0.39	0.10	0.09	0.08	0.22	0.44	0.11	0.09	0.09	0.29	0.48
105	TC	523	501	464	435	434	529	507	471	450	447	534	512	475	459	458
	SHC	232	285	373	432	434	241	301	397	440	447	251	317	420	454	458
	kW	38.2	38.0	37.5	36.9	37.0	38.4	38.1	37.6	37.0	37.1	38.5	38.2	37.7	37.2	37.3
	BF	0.09	0.08	0.07	0.16	0.41	0.10	0.09	0.08	0.25	0.46	0.10	0.09	0.10	0.30	0.50
115	TC	500	479	443	420	417	505	484	449	434	429	510	489	453	440	439
	SHC	224	278	365	412	417	234	294	389	434	429	244	309	411	440	439
	kW	43.1	42.9	42.7	42.0	42.2	43.2	43.0	42.8	42.3	42.3	43.3	43.1	42.8	42.4	42.4
	BF	0.09	0.08	0.07	0.21	0.43	0.10	0.09	0.09	0.31	0.48	0.10	0.09	0.10	0.32	0.52
120	TC	488	467	432	412	408	493	473	437	425	420	497	477	442	430	430
	SHC	220	274	361	404	408	230	290	384	425	420	240	306	406	430	430
	kW	45.9	45.7	45.5	44.4	45.2	46.0	45.8	45.7	45.2	45.2	46.1	45.9	45.6	45.2	45.2
	BF	0.09	0.08	0.07	0.23	0.45	0.10	0.09	0.09	0.33	0.49	0.10	0.09	0.10	0.33	0.53

See legend on page 34.

Cooling Capacities (cont)

48/50A040 (40 TONS) — SUBCOOLING MODE

Temp (F) Air Entering Condenser (Edb)		Evaporator Air Quantity – SCFM																			
		8,000					10,000					12,000					14,000				
		Evaporator Air Ewb (F)																			
		75	72	67	62	57	75	72	67	62	57	75	72	67	62	57	75	72	67	62	57
75	TC	501	473	429	379	352	528	499	455	403	374	549	519	474	420	387	562	534	488	446	408
	SHC	189	214	253	281	327	202	231	281	319	368	214	249	307	352	387	224	265	331	395	408
	kW	26.5	26.1	25.7	24.9	25.0	26.8	26.4	25.9	25.2	25.1	27.1	26.7	26.2	25.4	25.0	27.3	26.9	26.3	26.0	25.3
	BF	0.00	0.07	0.09	0.09	0.10	0.07	0.10	0.11	0.11	0.14	0.10	0.12	0.12	0.13	0.22	0.12	0.13	0.14	0.15	0.30
85	TC	478	444	410	369	330	497	477	422	382	344	523	492	440	397	363	527	498	462	424	383
	SHC	172	190	239	276	309	177	215	253	302	338	195	229	279	334	363	196	236	311	378	383
	kW	29.4	28.9	28.9	28.4	27.9	29.5	29.4	28.6	28.2	27.9	30.0	29.6	28.9	28.4	28.1	30.1	29.7	29.2	29.1	28.2
	BF	0.00	0.07	0.09	0.09	0.11	0.07	0.10	0.11	0.11	0.16	0.10	0.12	0.12	0.13	0.24	0.12	0.13	0.14	0.16	0.32
95	TC	442	416	375	348	310	476	451	398	358	332	484	457	426	386	344	506	480	437	395	363
	SHC	142	168	209	259	292	164	196	235	284	326	164	201	271	328	344	184	226	293	354	363
	kW	32.6	32.3	31.9	31.9	31.6	33.1	32.9	32.1	31.7	31.7	33.1	32.8	32.6	32.3	31.7	33.5	33.2	32.7	32.3	31.8
	BF	0.02	0.07	0.09	0.09	0.11	0.08	0.10	0.11	0.11	0.18	0.11	0.12	0.12	0.13	0.25	0.13	0.13	0.14	0.16	0.33
105	TC	415	402	363	314	288	438	413	384	347	316	464	439	400	361	325	467	449	410	374	342
	SHC	122	160	203	231	275	133	165	227	278	311	153	190	252	309	325	153	202	274	338	342
	kW	36.6	36.7	36.4	35.9	35.9	36.8	36.6	36.5	36.4	36.2	37.2	37.0	36.7	36.4	36.0	37.2	37.1	36.8	36.5	36.1
	BF	0.03	0.08	0.09	0.09	0.11	0.08	0.10	0.11	0.11	0.19	0.11	0.12	0.12	0.14	0.27	0.13	0.13	0.14	0.16	0.34
115	TC	388	376	339	304	273	410	394	356	311	295	433	410	371	324	303	445	421	383	334	330
	SHC	103	141	184	226	260	113	154	207	247	291	130	169	231	277	303	140	183	254	303	330
	kW	41.2	41.5	41.4	41.4	41.5	41.4	41.5	41.4	40.9	41.3	41.8	41.6	41.4	41.0	40.9	41.9	41.7	41.6	41.0	41.4
	BF	0.03	0.08	0.09	0.09	0.13	0.08	0.10	0.10	0.11	0.21	0.11	0.12	0.12	0.14	0.29	0.13	0.13	0.14	0.17	0.36

48/50A040 (40 TONS) — SUBCOOLING MODE (cont)

Temp (F) Air Entering Condenser (Edb)		Evaporator Air Quantity – SCFM														
		16,000					18,000					20,000				
		Evaporator Air Ewb (F)														
		75	72	67	62	57	75	72	67	62	57	75	72	67	62	57
75	TC	568	537	490	445	416	583	553	509	465	452	591	554	516	469	464
	SHC	228	272	345	410	416	243	293	377	445	452	252	300	400	465	464
	kW	27.4	26.9	26.3	25.7	25.4	27.6	27.2	26.6	26.1	25.9	27.7	27.2	26.8	26.0	26.0
	BF	0.14	0.15	0.15	0.18	0.37	0.15	0.16	0.17	0.21	0.42	0.17	0.18	0.18	0.24	0.47
85	TC	539	509	463	421	405	553	519	469	439	433	561	531	478	46	444
	SHC	206	251	325	391	405	222	266	345	422	433	231	285	368	45	444
	kW	30.2	29.8	29.2	28.7	28.5	30.5	29.9	29.2	29.2	29.1	30.6	30.1	29.4	29.2	29.2
	BF	0.14	0.15	0.15	0.18	0.38	0.16	0.16	0.17	0.22	0.43	0.17	0.18	0.18	0.25	0.48
95	TC	515	489	448	409	394	517	488	455	404	409	525	495	449	424	425
	SHC	192	239	317	384	394	194	244	338	394	409	204	257	347	423	425
	kW	33.6	33.3	32.9	32.6	32.4	33.7	33.2	32.9	32.2	32.5	33.8	33.3	32.7	32.7	32.9
	BF	0.14	0.15	0.15	0.19	0.39	0.16	0.16	0.17	0.22	0.44	0.17	0.18	0.18	0.26	0.49
105	TC	484	460	420	369	359	488	464	426	384	385	491	471	431	399	396
	SHC	169	218	297	351	359	175	229	318	374	385	179	243	337	399	396
	kW	37.5	37.2	36.9	36.2	36.1	37.5	37.2	37.0	36.4	36.6	37.5	37.3	37.0	36.8	36.7
	BF	0.14	0.15	0.15	0.19	0.41	0.16	0.16	0.17	0.24	0.46	0.17	0.18	0.18	0.28	0.50
115	TC	445	429	390	357	335	458	435	397	365	355	464	432	401	375	366
	SHC	139	195	275	339	335	153	208	296	356	355	161	212	314	375	366
	kW	41.8	41.8	41.6	41.5	40.9	42.0	41.8	41.6	41.5	41.4	42.1	41.7	41.7	41.6	41.4
	BF	0.14	0.15	0.15	0.21	0.42	0.16	0.16	0.17	0.26	0.47	0.17	0.18	0.19	0.29	0.51

See legend on page 34.

Cooling Capacities (cont)

50A040 (40 TONS) — HOT GAS REHEAT MODE

Temp (F) Air Entering Condenser (Edb)		Air Entering Evaporator — Ewb (F)													
		75 Dry Bulb							75 Dry Bulb						
		62.5 Wet Bulb (50% RH)							65.3 Wet Bulb (60% RH)						
		Air Entering Evaporator — SCFM													
		8,000	10,000	12,000	14,000	16,000	18,000	20,000	8,000	10,000	12,000	14,000	16,000	18,000	20,000
40	TC	243	259	269	277	283	288	291	259	275	286	294	300	305	308
	SHC	100	118	136	153	171	188	205	73	85	97	110	122	135	148
	kW	23.4	23.3	23.3	23.3	23.3	23.3	23.3	24.4	24.2	24.1	24.0	24.0	24.0	24.0
	BF	0.06	0.08	0.10	0.11	0.13	0.15	0.16	0.05	0.07	0.10	0.11	0.13	0.15	0.16
50	TC	224	239	249	256	262	266	270	240	255	265	273	278	283	286
	SHC	84	101	119	137	154	172	189	57	69	81	93	106	119	131
	kW	24.3	24.2	24.2	24.2	24.2	24.2	24.2	25.3	25.1	25.0	24.9	24.9	24.9	24.9
	BF	0.06	0.08	0.10	0.11	0.13	0.14	0.16	0.05	0.07	0.09	0.11	0.13	0.15	0.16
60	TC	204	217	227	234	239	243	247	219	233	243	250	256	260	263
	SHC	67	84	102	120	137	155	172	40	52	64	76	89	102	115
	kW	25.4	25.2	25.2	25.1	25.1	25.1	25.1	26.4	26.1	26.0	25.9	25.9	25.8	25.8
	BF	0.06	0.08	0.09	0.11	0.13	0.14	0.16	0.05	0.07	0.09	0.11	0.13	0.15	0.16
70	TC	184	196	205	211	216	220	223	198	211	220	227	232	235	238
	SHC	51	67	85	102	120	137	154	23	34	47	59	72	84	97
	kW	26.5	26.4	26.3	26.2	26.2	26.2	26.2	27.5	27.2	27.1	27.0	27.0	26.9	26.9
	BF	0.06	0.08	0.09	0.11	0.13	0.14	0.16	0.05	0.07	0.09	0.11	0.13	0.14	0.16
75	TC	175	186	194	200	204	208	211	188	200	209	215	220	223	226
	SHC	42	59	76	94	111	128	145	15	26	38	50	63	76	88
	kW	27.2	27.0	26.9	26.9	26.8	26.8	26.8	28.2	27.9	27.7	27.6	27.6	27.5	27.5
	BF	0.06	0.08	0.09	0.11	0.13	0.14	0.16	0.05	0.07	0.09	0.11	0.13	0.14	0.16
80	TC	165	176	183	188	193	196	199	178	189	197	203	208	211	214
	SHC	34	51	68	85	102	120	136	6	17	29	42	54	67	80
	kW	27.9	27.7	27.6	27.5	27.5	27.5	27.5	28.8	28.5	28.4	28.3	28.2	28.2	28.1
	BF	0.06	0.08	0.09	0.11	0.13	0.14	0.16	0.05	0.07	0.09	0.11	0.13	0.14	0.16

50A040 (40 TONS) — HOT GAS REHEAT MODE (cont)

Temp (F) Air Entering Condenser (Edb)		Air Entering Evaporator — Ewb (F)													
		75 Dry Bulb							75 Dry Bulb						
		68.0 Wet Bulb (70% RH)							70.5 Wet Bulb (80% RH)						
		Air Entering Evaporator — SCFM													
		8,000	10,000	12,000	14,000	16,000	18,000	20,000	8,000	10,000	12,000	14,000	16,000	18,000	20,000
40	TC	275	291	302	310	316	321	325	290	305	316	324	331	335	339
	SHC	47	53	60	68	76	84	92	20	23	26	29	33	37	42
	kW	25.5	25.1	25.0	24.9	24.8	24.8	24.7	26.5	26.1	25.8	25.7	25.6	25.5	25.4
	BF	0.02	0.05	0.08	0.10	0.13	0.14	0.16	0.00	0.00	0.02	0.06	0.09	0.11	0.13
50	TC	255	271	281	289	295	299	303	270	286	296	304	310	315	318
	SHC	30	37	44	51	59	67	76	5	7	10	13	17	21	26
	kW	26.4	26.0	25.8	25.7	25.6	25.6	25.5	27.4	26.9	26.7	26.5	26.4	26.3	26.2
	BF	0.02	0.05	0.08	0.10	0.12	0.14	0.16	0.00	0.00	0.02	0.06	0.09	0.11	0.13
60	TC	235	249	259	266	272	276	279	249	264	274	281	287	291	294
	SHC	14	20	27	34	42	51	59	–12	–10	–7	–4	0	4	9
	kW	27.4	27.0	26.8	26.7	26.6	26.5	26.5	28.4	27.9	27.6	27.4	27.3	27.2	27.2
	BF	0.02	0.05	0.08	0.10	0.12	0.14	0.16	0.00	0.00	0.03	0.06	0.09	0.11	0.13
70	TC	213	227	236	243	248	252	255	227	241	251	257	263	267	270
	SHC	–4	3	10	17	25	33	42	–29	–27	–24	–21	–17	–13	–9
	kW	28.5	28.1	27.9	27.8	27.7	27.6	27.6	29.6	29.0	28.7	28.5	28.4	28.3	28.2
	BF	0.02	0.05	0.08	0.10	0.12	0.14	0.16	0.00	0.00	0.03	0.06	0.09	0.11	0.13
75	TC	202	215	224	231	235	239	242	216	230	239	245	250	254	257
	SHC	–12	–6	1	8	16	25	33	–38	–36	–33	–30	–26	–22	–17
	kW	29.2	28.8	28.5	28.4	28.3	28.2	28.2	30.2	29.7	29.3	29.1	29.0	28.9	28.8
	BF	0.02	0.05	0.08	0.10	0.12	0.14	0.16	0.00	0.00	0.03	0.06	0.09	0.11	0.13
80	TC	191	203	212	218	223	226	229	205	218	227	233	238	241	244
	SHC	–21	–15	–8	0	8	16	24	–46	–45	–42	–39	–35	–31	–26
	kW	29.8	29.4	29.2	29.0	28.9	28.9	28.8	30.9	30.3	30.0	29.8	29.7	29.6	29.5
	BF	0.02	0.05	0.08	0.10	0.12	0.14	0.16	0.00	0.00	0.03	0.06	0.09	0.11	0.13

See legend on page 34.

Cooling Capacities (cont)

48/50A050 (50 TONS) — STANDARD MODE

Temp (F) Air Entering Condenser (Edb)		Evaporator Air Quantity — Cfm														
		10,000					12,500					15,000				
		Evaporator Air — Ewb (F)														
		75	72	67	62	57	75	72	67	62	57	75	72	67	62	57
75	TC	636	602	545	495	450	669	633	575	525	489	692	658	602	550	523
	SHC	255	287	340	391	438	271	314	379	443	482	289	338	418	493	523
	kW	31.3	30.7	29.9	29.2	28.5	31.8	31.2	30.3	29.6	29.0	32.2	31.6	30.8	30.1	29.6
	BF	0.00	0.07	0.06	0.04	0.05	0.00	0.10	0.06	0.05	0.16	0.18	0.09	0.06	0.06	0.23
85	TC	611	574	524	476	432	639	605	553	504	471	662	628	576	525	503
	SHC	237	270	322	371	413	253	293	357	417	450	266	312	387	456	481
	kW	34.6	33.9	33.3	32.8	32.2	35.0	34.5	33.8	33.2	32.6	35.4	34.9	34.2	33.6	33.1
	BF	0.00	0.17	0.06	0.04	0.06	0.00	0.09	0.05	0.05	0.17	0.15	0.08	0.06	0.06	0.25
95	TC	584	553	502	454	411	613	581	530	480	450	633	601	549	499	482
	SHC	227	261	315	365	408	246	287	354	416	450	263	311	390	463	482
	kW	38.4	38.0	37.5	37.4	36.8	38.9	38.5	38.1	37.9	37.2	39.3	38.9	38.5	38.1	37.6
	BF	0.00	0.13	0.05	0.04	0.07	0.08	0.08	0.05	0.05	0.18	0.13	0.08	0.06	0.06	0.28
105	TC	559	527	477	429	393	585	553	502	453	429	603	572	519	471	459
	SHC	213	248	301	351	387	233	274	339	401	429	249	297	375	447	459
	kW	43.0	42.9	42.9	43.5	42.4	43.8	43.5	43.5	43.8	43.0	44.1	43.9	43.9	43.7	43.2
	BF	0.00	0.10	0.05	0.04	0.11	0.20	0.08	0.05	0.05	0.21	0.12	0.07	0.06	0.07	0.30
115	TC	529	498	449	402	368	554	523	472	425	406	572	540	489	442	435
	SHC	201	234	286	335	367	219	259	324	385	406	235	283	360	428	435
	kW	49.0	49.3	50.0	51.1	50.1	49.8	49.9	50.6	51.2	50.4	50.2	50.3	51.0	50.8	50.4
	BF	0.00	0.09	0.04	0.04	0.13	0.15	0.07	0.05	0.05	0.24	0.11	0.07	0.05	0.08	0.33
120	TC	514	484	435	386	357	538	507	457	409	393	555	524	472	427	421
	SHC	194	227	278	326	357	212	252	316	376	393	228	275	351	418	421
	kW	52.5	53.0	54.3	55.3	54.6	53.3	53.7	54.7	55.5	54.2	53.8	54.1	55.3	54.7	54.1
	BF	0.00	0.08	0.04	0.04	0.15	0.13	0.07	0.05	0.05	0.26	0.10	0.07	0.05	0.08	0.35

48/50A050 (50 TONS) — STANDARD MODE (cont)

Temp (F) Air Entering Condenser (Edb)		Evaporator Air Quantity — Cfm									
		17,500					20,000				
		Evaporator Air — Ewb (F)									
		75	72	67	62	57	75	72	67	62	57
75	TC	709	674	618	566	550	740	685	629	577	573
	SHC	305	361	453	537	550	326	383	486	570	573
	kW	32.4	31.9	31.0	30.3	30.0	32.6	32.1	31.2	30.4	30.3
	BF	0.13	0.08	0.06	0.08	0.31	0.12	0.08	0.07	0.12	0.37
85	TC	678	645	591	540	529	691	656	600	552	550
	SHC	276	328	413	488	499	284	341	435	504	510
	kW	35.7	35.3	34.4	33.7	33.5	35.9	35.4	34.6	33.8	33.8
	BF	0.12	0.08	0.06	0.09	0.33	0.11	0.08	0.07	0.15	0.39
95	TC	648	616	563	512	506	658	625	572	530	527
	SHC	278	334	425	501	506	292	355	457	522	527
	kW	39.6	39.2	38.8	37.9	37.9	39.8	39.3	38.9	38.0	38.1
	BF	0.11	0.08	0.06	0.10	0.35	0.10	0.08	0.07	0.18	0.41
105	TC	617	585	532	487	483	628	595	542	506	503
	SHC	264	320	409	481	483	279	341	442	499	503
	kW	44.4	44.2	44.3	43.2	43.4	44.6	44.4	44.5	43.3	43.5
	BF	0.10	0.07	0.06	0.12	0.37	0.10	0.08	0.07	0.20	0.43
115	TC	584	553	500	463	458	594	562	508	476	474
	SHC	250	305	394	451	458	265	327	425	476	474
	kW	50.6	50.7	51.4	50.1	50.4	50.8	50.9	51.7	50.4	50.2
	BF	0.10	0.07	0.06	0.17	0.40	0.09	0.07	0.07	0.22	0.46
120	TC	567	535	482	447	444	577	545	492	465	462
	SHC	243	297	385	440	444	257	319	417	459	462
	kW	54.1	54.4	55.3	53.6	54.3	54.3	54.7	56.0	53.8	54.2
	BF	0.09	0.07	0.06	0.18	0.41	0.09	0.07	0.07	0.25	0.47

See legend on page 34.

Cooling Capacities (cont)

48/50A050 (50 TONS) — SUBCOOLING MODE

Temp (F) Air Entering Condenser (Edb)		Evaporator Air Quantity – SCFM																			
		10,000					12,500					15,000					17,500				
		Evaporator Air Ewb (F)																			
		75	72	67	62	57	75	72	67	62	57	75	72	67	62	57	75	72	67	62	57
75	TC	601	568	523	479	438	624	596	547	507	471	643	608	567	521	494	651	604	582	542	524
	SHC	218	251	311	367	418	229	274	342	416	468	241	287	377	455	494	247	289	410	501	524
	kW	31.4	30.8	30.1	29.5	28.9	31.9	31.4	30.5	29.9	29.4	32.5	31.8	30.9	30.1	29.7	32.6	31.7	31.2	30.4	30.1
	BF	0.00	0.02	0.03	0.03	0.05	0.01	0.04	0.04	0.05	0.12	0.04	0.05	0.06	0.07	0.21	0.06	0.07	0.07	0.09	0.30
85	TC	567	541	498	455	417	596	570	522	481	449	620	586	540	495	472	610	599	554	510	496
	SHC	192	230	291	348	399	209	254	324	396	446	429	272	356	434	472	428	426	414	474	496
	kW	34.6	34.2	33.5	32.8	32.3	35.2	34.7	33.9	33.2	32.8	35.8	35.0	34.2	33.4	33.1	35.6	35.5	34.5	33.7	33.4
	BF	0.00	0.02	0.03	0.03	0.06	0.02	0.04	0.04	0.05	0.14	0.04	0.05	0.06	0.07	0.23	0.06	0.07	0.07	0.10	0.31
95	TC	540	513	469	428	395	565	497	495	454	426	565	555	512	470	452	591	568	524	482	477
	SHC	172	209	268	326	380	185	189	304	375	426	180	250	336	415	452	205	269	367	451	477
	kW	38.6	38.1	37.3	36.7	36.4	39.1	38.0	37.8	37.1	36.7	39.2	38.9	38.1	37.3	37.0	39.7	39.0	38.3	37.6	37.5
	BF	0.00	0.02	0.03	0.03	0.07	0.02	0.04	0.04	0.05	0.14	0.05	0.05	0.06	0.07	0.24	0.06	0.07	0.07	0.10	0.32
105	TC	512	484	444	405	378	533	506	465	424	400	548	523	482	440	423	524	535	494	455	445
	SHC	153	189	250	309	364	163	207	281	352	400	174	227	315	392	423	149	246	346	430	445
	kW	43.2	42.7	42.1	41.6	41.5	43.6	43.0	42.4	41.8	41.5	43.9	43.3	42.6	42.0	41.7	43.6	43.6	42.8	42.2	42.0
	BF	0.00	0.02	0.03	0.03	0.08	0.02	0.04	0.04	0.05	0.16	0.05	0.05	0.06	0.08	0.26	0.07	0.07	0.07	0.11	0.34
115	TC	477	454	421	385	350	500	474	432	398	377	515	489	450	413	401	533	502	459	427	421
	SHC	127	167	236	296	337	139	184	257	332	377	150	203	292	372	401	168	223	320	404	421
	kW	48.5	48.1	47.8	47.5	47.2	48.9	48.4	47.8	47.5	47.3	49.2	48.7	48.0	47.6	47.4	49.5	48.9	48.1	47.7	47.6
	BF	0.00	0.02	0.03	0.04	0.10	0.03	0.04	0.04	0.05	0.18	0.05	0.05	0.06	0.08	0.28	0.07	0.07	0.07	0.13	0.35

48/50A050 (50 TONS) — SUBCOOLING MODE (cont)

Temp (F) Air Entering Condenser (Edb)		Evaporator Air Quantity – SCFM														
		20,000					22,500					25,000				
		Evaporator Air Ewb (F)														
		75	72	67	62	57	75	72	67	62	57	75	72	67	62	57
75	TC	657	628	564	549	544	666	640	592	561	559	671	646	604	575	574
	SHC	255	320	412	530	544	267	343	460	557	559	276	360	493	575	574
	kW	32.7	32.2	31.0	30.6	30.5	32.9	32.4	31.5	30.8	30.7	33.0	32.5	31.8	31.0	31.0
	BF	0.08	0.08	0.08	0.13	0.36	0.10	0.10	0.10	0.18	0.42	0.11	0.11	0.11	0.23	0.46
85	TC	613	586	527	523	517	641	614	573	536	532	630	620	568	553	552
	SHC	428	422	409	407	406	437	430	418	409	409	433	430	416	553	552
	kW	35.7	35.2	34.1	33.9	33.8	36.4	35.8	34.8	34.1	34.1	36.1	35.8	34.7	34.4	34.4
	BF	0.08	0.08	0.08	0.13	0.37	0.10	0.10	0.10	0.19	0.43	0.11	0.11	0.12	0.25	0.47
95	TC	608	579	534	499	494	615	588	535	508	506	599	598	549	520	524
	SHC	224	289	397	486	494	236	309	419	505	506	222	329	454	520	524
	kW	39.9	39.3	38.5	37.8	37.7	40.0	39.5	38.5	38.0	38.0	39.9	39.7	38.8	38.2	38.2
	BF	0.08	0.08	0.09	0.15	0.39	0.10	0.10	0.10	0.20	0.44	0.11	0.11	0.12	0.26	0.48
105	TC	568	517	501	473	462	579	553	509	478	476	562	548	516	494	494
	SHC	194	237	374	461	462	210	284	402	478	476	198	292	430	494	494
	kW	44.3	43.3	42.9	42.4	42.2	44.5	43.9	43.0	42.5	42.5	44.3	43.9	43.2	42.7	42.7
	BF	0.08	0.08	0.09	0.16	0.40	0.10	0.10	0.10	0.21	0.45	0.11	0.11	0.12	0.28	0.49
115	TC	496	481	469	443	439	514	490	476	452	452	533	506	482	461	462
	SHC	134	211	350	432	439	155	204	378	452	452	179	231	404	461	462
	kW	49.0	48.5	48.2	47.8	47.7	49.3	48.7	48.3	47.9	47.9	49.5	48.9	48.4	48.0	48.1
	BF	0.08	0.08	0.09	0.18	0.41	0.10	0.10	0.11	0.23	0.46	0.11	0.11	0.13	0.29	0.51

See legend on page 34.

Cooling Capacities (cont)

50A050 (50 TONS) — HOT GAS REHEAT MODE

Temp (F) Air Entering Condenser (Edb)		Air Entering Evaporator — Ewb (F)													
		75 Dry Bulb							75 Dry Bulb						
		62.5 Wet Bulb (50% RH)							65.3 Wet Bulb (60% RH)						
		Air Entering Evaporator — SCFM													
		10,000	12,500	15,000	17,500	20,000	22,500	25,000	10,000	12,500	15,000	17,500	20,000	22,500	25,000
40	TC	192	208	218	225	230	234	238	203	219	230	238	243	247	251
	SHC	40	67	93	118	142	166	188	–1	18	37	55	74	93	112
	kW	37.0	36.0	35.5	35.2	35.0	34.9	34.8	38.5	37.3	36.7	36.3	36.1	35.9	35.8
	BF	0.02	0.03	0.04	0.06	0.07	0.09	0.11	0.02	0.03	0.04	0.05	0.07	0.08	0.09
50	TC	197	213	223	231	236	240	243	209	226	237	244	250	254	258
	SHC	43	70	96	121	145	169	191	2	21	40	59	78	97	115
	kW	36.1	35.1	34.6	34.3	34.1	34.0	33.9	37.6	36.4	35.8	35.4	35.2	35.0	34.9
	BF	0.02	0.03	0.04	0.06	0.07	0.09	0.11	0.02	0.03	0.04	0.05	0.07	0.08	0.09
60	TC	203	219	229	237	242	246	250	214	231	242	250	255	260	263
	SHC	47	73	99	124	149	173	195	5	24	43	62	80	99	118
	kW	35.3	34.3	33.8	33.5	33.3	33.2	33.2	36.8	35.6	35.0	34.7	34.4	34.3	34.1
	BF	0.02	0.03	0.04	0.06	0.07	0.09	0.11	0.02	0.03	0.04	0.05	0.07	0.08	0.09
70	TC	212	228	239	246	252	256	259	222	240	251	259	265	270	273
	SHC	52	78	104	129	154	178	200	10	29	48	67	86	105	124
	kW	33.8	32.9	32.4	32.1	32.0	31.9	31.8	35.3	34.2	33.6	33.3	33.1	32.9	32.8
	BF	0.02	0.03	0.04	0.05	0.07	0.08	0.10	0.02	0.03	0.04	0.05	0.06	0.08	0.09
75	TC	219	235	246	254	260	265	269	230	247	259	268	275	281	285
	SHC	57	83	109	134	159	183	206	15	34	53	72	91	110	129
	kW	32.6	31.7	31.2	31.0	30.8	30.8	30.7	34.1	33.0	32.5	32.2	32.0	31.8	31.7
	BF	0.02	0.03	0.04	0.05	0.07	0.08	0.10	0.02	0.03	0.04	0.05	0.06	0.08	0.09
80	TC	225	243	255	264	271	276	280	236	256	269	279	286	292	297
	SHC	61	87	114	140	165	189	212	19	39	58	78	97	116	135
	kW	31.5	30.7	30.3	30.0	29.9	29.8	29.8	33.0	32.0	31.5	31.2	31.0	30.9	30.8
	BF	0.02	0.03	0.04	0.05	0.07	0.08	0.10	0.02	0.03	0.04	0.05	0.06	0.08	0.09

50A050 (50 TONS) — HOT GAS REHEAT MODE (cont)

Temp (F) Air Entering Condenser (Edb)		Air Entering Evaporator — Ewb (F)													
		75 Dry Bulb							75 Dry Bulb						
		68.0 Wet Bulb (70% RH)							70.5 Wet Bulb (80% RH)						
		Air Entering Evaporator — SCFM													
		10,000	12,500	15,000	17,500	20,000	22,500	25,000	10,000	12,500	15,000	17,500	20,000	22,500	25,000
40	TC	213	231	242	250	256	260	264	223	241	253	262	268	273	277
	SHC	–42	–30	–18	–6	6	18	31	–81	–76	–71	–65	–59	–52	–45
	kW	40.0	38.6	37.9	37.4	37.1	36.9	36.8	41.6	40.0	39.1	38.6	38.2	38.0	37.8
	BF	0.01	0.03	0.04	0.05	0.07	0.08	0.09	0.00	0.01	0.03	0.05	0.07	0.08	0.10
50	TC	219	237	248	257	263	267	271	229	248	260	268	275	280	284
	SHC	–39	–27	–15	–3	9	22	34	–78	–73	–68	–62	–56	–49	–42
	kW	39.1	37.8	37.0	36.6	36.3	36.1	36.0	40.7	39.1	38.3	37.8	37.4	37.1	36.9
	BF	0.01	0.03	0.04	0.05	0.07	0.08	0.09	0.00	0.01	0.03	0.05	0.07	0.08	0.10
60	TC	224	242	254	262	268	273	277	234	253	265	274	281	286	290
	SHC	–36	–24	–12	0	12	24	37	–75	–70	–65	–59	–53	–46	–40
	kW	38.3	37.0	36.3	35.8	35.5	35.3	35.2	39.9	38.3	37.5	37.0	36.6	36.4	36.2
	BF	0.01	0.03	0.04	0.05	0.07	0.08	0.09	0.00	0.01	0.03	0.05	0.07	0.08	0.10
70	TC	233	251	263	272	278	283	287	243	262	275	284	291	296	300
	SHC	–31	–19	–7	5	17	29	42	–70	–65	–60	–54	–48	–41	–35
	kW	36.8	35.5	34.9	34.5	34.2	34.0	33.9	38.4	36.9	36.1	35.6	35.3	35.0	34.9
	BF	0.01	0.03	0.04	0.05	0.07	0.08	0.09	0.00	0.01	0.03	0.05	0.07	0.08	0.10
75	TC	241	259	273	282	290	295	300	251	271	285	296	303	309	314
	SHC	–26	–15	–2	10	23	35	48	–66	–60	–55	–49	–42	–35	–28
	kW	35.6	34.4	33.8	33.4	33.1	32.9	32.8	37.3	35.8	35.0	34.5	34.2	34.0	33.8
	BF	0.01	0.03	0.04	0.05	0.07	0.08	0.09	0.00	0.01	0.03	0.05	0.07	0.08	0.10
80	TC	249	269	283	294	301	307	312	260	282	297	307	316	322	327
	SHC	–22	–9	3	16	29	41	54	–61	–55	–49	–43	–36	–29	–22
	kW	34.6	33.4	32.8	32.4	32.2	32.0	31.9	36.3	34.8	34.1	33.6	33.3	33.1	32.9
	BF	0.01	0.03	0.04	0.05	0.07	0.08	0.09	0.00	0.01	0.03	0.05	0.07	0.08	0.10

See legend on page 34.

Cooling Capacities (cont)

48/50A060 (60 TONS) — STANDARD MODE

Temp (F) Air Entering Condenser (Edb)		Evaporator Air Quantity — Cfm														
		12,000					15,000					18,000				
		Evaporator Air — Ewb (F)														
		75	72	67	62	57	75	72	67	62	57	75	72	67	62	57
75	TC	738	705	653	603	554	773	736	684	633	592	796	759	706	655	622
	SHC	293	334	406	474	533	305	361	447	530	578	324	386	486	582	622
	kW	40.0	39.2	38.1	37.1	36.3	40.7	39.9	38.7	37.7	36.9	41.2	40.4	39.2	38.2	37.5
	BF	0.00	0.00	0.10	0.08	0.08	0.00	0.15	0.10	0.09	0.19	0.23	0.13	0.11	0.10	0.25
85	TC	716	686	635	585	537	748	715	664	615	579	768	737	685	635	607
	SHC	284	327	398	465	522	298	353	439	521	562	315	378	478	572	607
	kW	44.4	43.7	42.7	41.7	40.9	45.1	44.4	43.3	42.3	41.5	45.6	44.9	43.7	42.7	42.1
	BF	0.00	0.12	0.10	0.07	0.09	0.00	0.14	0.10	0.09	0.22	0.20	0.12	0.11	0.10	0.27
95	TC	695	666	615	566	519	725	694	643	593	557	745	713	662	613	590
	SHC	276	320	389	456	510	292	346	430	511	557	308	370	469	561	590
	kW	49.5	48.8	47.8	46.9	46.1	50.2	49.5	48.4	47.5	46.8	50.7	50.0	48.8	47.9	47.4
	BF	0.00	0.19	0.09	0.07	0.10	0.00	0.13	0.09	0.09	0.20	0.18	0.12	0.10	0.10	0.29
105	TC	673	643	593	545	502	699	669	619	570	539	718	687	638	587	570
	SHC	264	311	380	446	493	283	337	420	500	539	300	361	460	549	570
	kW	55.3	54.6	53.7	52.8	51.8	55.9	55.3	54.2	53.3	52.6	56.4	55.7	54.7	53.7	53.3
	BF	0.00	0.15	0.09	0.07	0.13	0.24	0.12	0.09	0.08	0.22	0.16	0.12	0.10	0.11	0.31
115	TC	647	617	567	521	484	670	641	592	544	519	687	657	609	561	549
	SHC	255	301	369	434	474	274	327	410	488	519	290	350	448	536	549
	kW	61.7	61.1	60.3	60.0	59.2	62.3	61.7	60.9	60.4	59.9	62.8	62.2	61.3	60.6	60.2
	BF	0.00	0.13	0.08	0.07	0.17	0.18	0.11	0.09	0.08	0.25	0.14	0.11	0.10	0.11	0.34
120	TC	632	603	554	508	471	654	626	578	531	509	670	641	594	547	538
	SHC	251	296	364	428	461	269	322	404	482	509	285	345	443	528	538
	kW	65.2	64.8	64.3	64.1	63.3	65.8	65.5	64.9	64.5	64.0	66.4	65.8	65.2	64.7	64.4
	BF	0.00	0.12	0.08	0.07	0.17	0.17	0.10	0.09	0.09	0.27	0.13	0.11	0.10	0.12	0.35

48/50A060 (60 TONS) — STANDARD MODE (cont)

Temp (F) Air Entering Condenser (Edb)		Evaporator Air Quantity — Cfm														
		21,000					24,000					27,000				
		Evaporator Air — Ewb (F)														
		75	72	67	62	57	75	72	67	62	57	75	72	67	62	57
75	TC	813	776	722	671	651	826	789	735	683	674	837	800	745	695	693
	SHC	340	409	523	627	651	355	432	560	665	674	369	454	594	689	693
	kW	41.6	40.7	39.5	38.5	38.1	41.9	41.0	39.8	38.7	38.5	42.2	41.3	40.1	39.0	38.9
	BF	0.18	0.13	0.11	0.12	0.33	0.16	0.14	0.12	0.16	0.39	0.16	0.14	0.13	0.21	0.44
85	TC	784	752	700	650	634	796	764	713	662	656	806	774	723	678	675
	SHC	331	401	515	617	634	346	423	552	648	656	361	446	587	665	675
	kW	46.0	45.2	44.1	43.0	42.7	46.3	45.5	44.3	43.2	43.1	46.5	45.8	44.6	43.6	43.5
	BF	0.16	0.13	0.11	0.13	0.35	0.15	0.14	0.12	0.18	0.41	0.15	0.14	0.13	0.25	0.46
95	TC	759	728	678	627	616	770	739	689	640	638	780	748	698	659	656
	SHC	323	393	507	604	616	338	415	543	630	638	353	437	577	644	656
	kW	51.1	50.4	49.2	48.2	47.9	51.4	50.6	49.5	48.4	48.3	51.6	50.9	49.7	48.8	48.7
	BF	0.15	0.13	0.11	0.14	0.36	0.15	0.13	0.12	0.20	0.42	0.15	0.14	0.13	0.27	0.47
105	TC	731	701	651	602	596	742	711	662	620	616	750	720	670	637	634
	SHC	315	384	497	589	596	330	406	533	608	616	344	428	566	622	634
	kW	56.8	56.1	55.0	54.0	53.8	57.1	56.4	55.3	54.2	54.2	57.3	56.6	55.5	54.6	54.6
	BF	0.14	0.12	0.11	0.15	0.39	0.14	0.13	0.12	0.23	0.44	0.14	0.14	0.13	0.30	0.49
115	TC	699	670	622	576	573	709	679	631	596	592	716	687	639	612	609
	SHC	305	373	485	568	573	320	396	521	583	592	334	418	555	596	609
	kW	63.2	62.5	61.5	60.6	60.6	63.5	62.7	61.8	60.8	60.8	63.6	62.9	62.0	61.1	61.1
	BF	0.13	0.12	0.11	0.17	0.41	0.13	0.13	0.12	0.26	0.47	0.14	0.14	0.13	0.33	0.51
120	TC	682	653	607	564	561	691	662	616	584	580	698	670	623	600	595
	SHC	300	368	480	555	561	315	390	515	570	580	329	412	549	584	595
	kW	66.7	66.1	65.4	64.4	64.6	67.0	66.3	65.7	64.7	64.8	67.1	66.5	65.8	65.0	65.4
	BF	0.13	0.12	0.11	0.19	0.42	0.13	0.13	0.12	0.28	0.48	0.13	0.13	0.13	0.35	0.52

See legend on page 34.

Cooling Capacities (cont)

48/50A060 (60 TONS) — SUBCOOLING MODE

Temp (F) Air Entering Condenser (Edb)		Evaporator Air Quantity – SCFM																			
		12,000					15,000					18,000					21,000				
		Evaporator Air Ewb (F)																			
		75	72	67	62	57	75	72	67	62	57	75	72	67	62	57	75	72	67	62	57
75	TC	708	671	616	563	513	742	706	649	596	549	767	732	675	620	583	787	751	693	639	613
	SHC	253	294	361	425	483	271	320	400	481	542	288	346	441	531	583	303	368	477	578	613
	kW	39.7	39.0	38.0	37.1	36.2	40.4	39.7	38.6	37.7	36.9	40.8	40.2	39.1	38.0	37.4	41.2	40.5	39.4	38.4	38.0
	BF	0.00	0.03	0.06	0.07	0.08	0.01	0.07	0.08	0.09	0.15	0.05	0.09	0.10	0.11	0.23	0.08	0.11	0.12	0.14	0.31
85	TC	676	642	588	539	492	709	675	620	568	525	730	697	643	590	556	748	714	660	607	585
	SHC	229	272	340	406	466	247	297	379	459	519	260	320	416	508	556	275	341	452	552	585
	kW	43.8	43.1	42.1	41.2	40.4	44.4	43.7	42.7	41.7	41.0	44.9	44.2	43.1	42.1	41.5	45.2	44.5	43.5	42.4	42.0
	BF	0.00	0.04	0.06	0.07	0.09	0.02	0.07	0.08	0.09	0.16	0.06	0.09	0.10	0.11	0.24	0.09	0.11	0.12	0.14	0.32
95	TC	643	608	559	511	464	674	641	589	539	500	695	663	610	560	531	711	679	626	576	556
	SHC	205	245	317	384	445	220	271	356	437	494	235	294	392	485	531	249	316	427	528	556
	kW	48.4	47.7	46.7	45.8	45.0	49.0	48.3	47.3	46.3	45.6	49.5	48.8	47.7	46.7	46.2	49.8	49.1	48.0	47.0	46.6
	BF	0.00	0.04	0.06	0.07	0.08	0.02	0.07	0.08	0.09	0.17	0.06	0.09	0.10	0.11	0.26	0.09	0.11	0.12	0.14	0.33
105	TC	609	574	528	481	439	636	606	556	508	473	654	625	575	527	501	671	640	590	543	526
	SHC	179	220	294	362	420	193	245	331	413	469	205	267	366	459	501	219	288	401	501	526
	kW	53.6	52.8	51.9	51.0	50.2	54.2	53.5	52.5	51.5	50.8	54.6	54.0	52.9	51.9	51.4	55.0	54.3	53.2	52.2	51.9
	BF	0.00	0.04	0.06	0.07	0.10	0.03	0.07	0.08	0.09	0.18	0.07	0.09	0.10	0.11	0.27	0.09	0.11	0.11	0.15	0.35
115	TC	571	538	494	450	413	594	566	519	474	443	614	585	538	492	470	628	599	551	506	494
	SHC	153	193	268	338	395	162	217	304	387	443	177	238	339	433	470	189	259	373	472	494
	kW	59.4	58.7	57.8	56.9	56.1	59.9	59.3	58.3	57.4	56.7	60.4	59.7	58.7	57.7	57.3	60.7	60.0	59.0	58.0	57.8
	BF	0.01	0.05	0.06	0.07	0.12	0.04	0.07	0.08	0.09	0.19	0.07	0.09	0.10	0.12	0.29	0.09	0.11	0.11	0.15	0.36

48/50A060 (60 TONS) — SUBCOOLING MODE (cont)

Temp (F) Air Entering Condenser (Edb)		Evaporator Air Quantity – SCFM														
		24,000					27,000					30,000				
		Evaporator Air Ewb (F)														
		75	72	67	62	57	75	72	67	62	57	75	72	67	62	57
75	TC	804	768	708	654	637	814	779	720	665	657	825	789	729	678	674
	SHC	320	392	512	618	637	332	413	546	652	657	346	434	578	678	674
	kW	41.5	40.9	39.7	38.7	38.4	41.8	41.1	39.9	38.9	38.8	42.0	41.3	40.1	39.2	39.1
	BF	0.11	0.13	0.13	0.17	0.38	0.12	0.14	0.15	0.20	0.43	0.14	0.16	0.16	0.24	0.47
85	TC	761	729	674	621	607	772	740	684	634	627	783	749	693	647	646
	SHC	289	364	487	591	607	302	385	520	621	627	317	406	552	647	646
	kW	45.5	44.8	43.7	42.7	42.5	45.7	45.1	43.9	43.0	42.8	46.0	45.3	44.1	43.2	43.2
	BF	0.11	0.13	0.13	0.17	0.39	0.13	0.14	0.15	0.21	0.44	0.14	0.16	0.16	0.26	0.48
95	TC	722	691	639	589	578	734	702	647	599	597	742	709	656	612	613
	SHC	260	337	461	565	578	275	358	492	588	597	287	377	524	612	613
	kW	50.1	49.4	48.3	47.3	47.1	50.3	49.6	48.5	47.5	47.4	50.5	49.8	48.6	47.7	47.8
	BF	0.11	0.13	0.13	0.17	0.40	0.13	0.14	0.15	0.23	0.45	0.14	0.15	0.16	0.27	0.49
105	TC	682	651	601	556	547	692	661	608	569	565	700	669	618	582	580
	SHC	232	308	434	533	547	245	328	464	559	565	258	349	496	582	580
	kW	55.3	54.5	53.4	52.5	52.3	55.5	54.8	53.6	52.7	52.7	55.7	54.9	53.8	53.0	53.0
	BF	0.11	0.12	0.13	0.19	0.41	0.13	0.14	0.15	0.24	0.46	0.14	0.15	0.16	0.29	0.50
115	TC	639	610	562	521	514	647	618	570	535	531	655	625	575	546	545
	SHC	202	279	406	501	514	214	299	437	527	531	226	318	464	546	545
	kW	61.0	60.3	59.2	58.3	58.2	61.2	60.5	59.4	58.6	58.5	61.4	60.7	59.5	58.8	58.8
	BF	0.11	0.12	0.13	0.21	0.42	0.13	0.14	0.15	0.25	0.47	0.14	0.15	0.17	0.30	0.51

See legend on page 34.

Cooling Capacities (cont)

50A060 (60 TONS) — HOT GAS REHEAT MODE

Temp (F) Air Entering Condenser (Edb)		Air Entering Evaporator — Ewb (F)													
		75 Dry Bulb							75 Dry Bulb						
		62.5 Wet Bulb (50% RH)							65.3 Wet Bulb (60% RH)						
		Air Entering Evaporator — SCFM													
		12,000	15,000	18,000	21,000	24,000	27,000	30,000	12,000	15,000	18,000	21,000	24,000	27,000	30,000
40	TC	298	322	339	352	362	369	375	314	339	357	370	380	388	395
	SHC	80	111	141	171	201	230	258	30	52	74	97	119	141	163
	kW	36.2	36.0	36.0	36.1	36.1	36.2	36.3	37.8	37.5	37.4	37.4	37.4	37.5	37.5
	BF	0.04	0.06	0.07	0.08	0.09	0.11	0.12	0.03	0.05	0.07	0.08	0.09	0.10	0.12
50	TC	287	308	324	336	345	351	357	301	325	341	353	363	370	376
	SHC	74	104	134	164	194	223	250	24	46	68	90	112	134	156
	kW	37.7	37.5	37.4	37.4	37.5	37.5	37.6	39.3	38.9	38.8	38.8	38.8	38.8	38.8
	BF	0.04	0.06	0.07	0.08	0.09	0.11	0.12	0.04	0.05	0.07	0.08	0.09	0.10	0.12
60	TC	277	297	311	320	328	335	340	291	311	326	337	346	352	358
	SHC	70	99	128	157	187	216	243	19	40	61	83	105	127	149
	kW	39.4	39.1	39.0	39.0	39.0	39.0	39.1	40.9	40.5	40.3	40.3	40.3	40.3	40.3
	BF	0.04	0.06	0.07	0.08	0.09	0.11	0.12	0.04	0.05	0.07	0.08	0.09	0.10	0.11
70	TC	267	287	299	309	316	321	325	280	300	314	324	331	336	341
	SHC	65	94	123	153	182	210	237	15	35	56	78	100	121	143
	kW	41.2	40.9	40.8	40.7	40.7	40.7	40.8	42.7	42.3	42.1	42.0	42.0	42.0	42.0
	BF	0.04	0.06	0.07	0.08	0.09	0.11	0.12	0.04	0.05	0.07	0.08	0.09	0.10	0.11
75	TC	262	281	294	303	309	314	319	275	295	308	317	324	330	334
	SHC	62	92	121	150	180	207	234	12	33	54	75	97	119	141
	kW	42.2	41.9	41.7	41.7	41.7	41.7	41.7	43.7	43.3	43.1	43.0	43.0	42.9	42.9
	BF	0.04	0.06	0.07	0.08	0.09	0.11	0.13	0.04	0.05	0.07	0.08	0.09	0.10	0.11
80	TC	257	275	288	296	303	308	312	270	289	302	311	318	323	327
	SHC	60	89	118	148	177	205	232	10	30	51	73	95	116	138
	kW	43.3	42.9	42.8	42.7	42.7	42.7	42.7	44.8	44.3	44.1	44.0	44.0	44.0	43.9
	BF	0.04	0.06	0.07	0.08	0.09	0.11	0.13	0.04	0.05	0.07	0.08	0.09	0.10	0.11

50A060 (60 TONS) — HOT GAS REHEAT MODE (cont)

Temp (F) Air Entering Condenser (Edb)		Air Entering Evaporator — Ewb (F)													
		75 Dry Bulb							75 Dry Bulb						
		68.0 Wet Bulb (70% RH)							70.5 Wet Bulb (80% RH)						
		Air Entering Evaporator — SCFM													
		12,000	15,000	18,000	21,000	24,000	27,000	30,000	12,000	15,000	18,000	21,000	24,000	27,000	30,000
40	TC	330	357	375	389	400	408	414	345	373	393	407	418	426	433
	SHC	–19	–5	10	24	39	54	69	–65	–58	–51	–43	–35	–27	–18
	kW	39.4	39.0	38.8	38.8	38.8	38.7	38.8	41.0	40.4	40.2	40.0	40.0	39.9	39.9
	BF	0.02	0.04	0.06	0.07	0.09	0.10	0.11	0.00	0.01	0.03	0.05	0.07	0.09	0.10
50	TC	316	341	359	372	381	389	395	331	358	376	389	399	407	413
	SHC	–25	–11	3	18	32	48	63	–72	–64	–57	–50	–42	–33	–25
	kW	40.9	40.4	40.2	40.1	40.1	40.1	40.1	42.5	41.8	41.5	41.4	41.3	41.2	41.2
	BF	0.02	0.04	0.06	0.07	0.09	0.10	0.11	0.00	0.01	0.03	0.05	0.07	0.09	0.10
60	TC	304	326	342	354	363	370	376	318	342	358	371	380	387	393
	SHC	–30	–17	–3	11	26	41	56	–77	–71	–64	–56	–48	–40	–31
	kW	42.5	42.0	41.7	41.6	41.6	41.5	41.5	44.1	43.4	43.1	42.9	42.8	42.7	42.6
	BF	0.02	0.04	0.06	0.07	0.09	0.10	0.11	0.00	0.01	0.03	0.05	0.07	0.09	0.10
70	TC	294	315	329	339	347	353	357	307	329	343	354	363	369	374
	SHC	–35	–22	–9	5	20	35	49	–82	–75	–69	–62	–54	–46	–37
	kW	44.3	43.8	43.5	43.3	43.3	43.2	43.2	45.9	45.2	44.8	44.6	44.5	44.4	44.3
	BF	0.02	0.04	0.06	0.07	0.09	0.10	0.11	0.00	0.01	0.03	0.05	0.07	0.09	0.10
75	TC	288	309	323	332	340	346	350	301	323	337	348	356	362	367
	SHC	–37	–24	–11	3	18	32	47	–84	–78	–71	–64	–56	–48	–40
	kW	45.3	44.7	44.5	44.3	44.2	44.2	44.1	46.9	46.1	45.7	45.5	45.4	45.3	45.3
	BF	0.02	0.04	0.06	0.07	0.09	0.10	0.11	0.00	0.01	0.03	0.05	0.07	0.09	0.10
80	TC	283	303	316	326	333	339	343	295	316	330	341	348	355	360
	SHC	–39	–27	–13	1	15	30	44	–86	–80	–74	–67	–59	–50	–42
	kW	46.4	45.8	45.5	45.3	45.2	45.2	45.1	47.9	47.2	46.8	46.6	46.4	46.3	46.3
	BF	0.02	0.04	0.06	0.07	0.09	0.10	0.11	0.00	0.01	0.03	0.05	0.07	0.09	0.10

See legend on page 34.

Fan Performance — Vertical Discharge Units

48A2,A3,A6,A7 020 (20 TONS)

Airflow (Cfm)	Available External Static Pressure (in. wg)																			
	0.2		0.4		0.6		0.8		1.0		1.2		1.4		1.6		1.8		2.0	
	rpm	bhp	rpm	bhp	rpm	bhp	rpm	bhp	rpm	bhp	rpm	bhp	rpm	bhp	rpm	bhp	rpm	bhp	rpm	bhp
4,000	328	0.62	406	0.84	472	1.07	529	1.30	580	1.54	626	1.78	668	2.02	708	2.27	745	2.51	780	2.76
5,000	369	0.97	439	1.19	500	1.43	554	1.69	604	1.95	650	2.21	692	2.48	731	2.74	769	3.01	804	3.28
6,000	415	1.43	477	1.65	533	1.90	584	2.17	631	2.45	676	2.73	717	3.01	756	3.30	793	3.59	828	3.88
7,000	463	2.01	519	2.25	570	2.50	618	2.78	662	3.06	704	3.36	744	3.65	782	3.96	818	4.27	852	4.58
7,500	488	2.36	541	2.60	590	2.86	636	3.13	679	3.42	720	3.72	759	4.02	796	4.33	832	4.65	866	4.96
8,000	513	2.74	564	2.98	611	3.24	655	3.52	697	3.81	737	4.11	775	4.42	811	4.74	846	5.06	879	5.38
9,000	564	3.61	612	3.87	655	4.13	696	4.42	735	4.71	772	5.02	808	5.33	843	5.65	876	5.98	909	6.32
10,000	616	4.64	661	4.91	701	5.18	739	5.47	776	5.77	811	6.08	845	6.40	878	6.72	909	7.06	940	7.40

48A2,A3,A6,A7 020 (20 TONS) (cont)

Airflow (Cfm)	Available External Static Pressure (in. wg)																			
	2.2		2.4		2.6		2.8		3.0		3.2		3.4		3.6		3.8		4.0	
	rpm	bhp	rpm	bhp	rpm	bhp	rpm	bhp	rpm	bhp	rpm	bhp	rpm	bhp	rpm	bhp	rpm	bhp	rpm	bhp
4,000	814	3.01	845	3.26	876	3.51	905	3.76	934	4.02	961	4.28	987	4.54	1013	4.80	1038	5.06	1062	5.32
5,000	837	3.55	869	3.82	900	4.10	929	4.37	958	4.64	985	4.92	1012	5.20	1038	5.48	1063	5.76	1087	6.04
6,000	861	4.17	893	4.46	923	4.76	953	5.05	981	5.35	1009	5.65	1036	5.94	1062	6.24	1087	6.54	1111	6.84
7,000	885	4.89	917	5.20	947	5.51	977	5.83	1005	6.14	1033	6.46	1059	6.78	1085	7.09	1110	7.41	1135	7.73
7,500	898	5.28	930	5.61	960	5.93	989	6.25	1017	6.58	1045	6.90	1071	7.23	1097	7.56	1122	7.88	1147	8.21
8,000	912	5.71	943	6.04	973	6.37	1002	6.70	1030	7.04	1057	7.37	1083	7.71	1109	8.04	1134	8.38	1159	8.72
9,000	940	6.66	970	7.00	999	7.35	1028	7.69	1055	8.04	1082	8.39	1109	8.75	1134	9.10	1159	9.45	1183	9.81
10,000	971	7.75	1000	8.10	1028	8.46	1056	8.82	1083	9.18	1109	9.54	1135	9.91	1160	10.28	1185	10.65	—	—

48A2,A3,A6,A7 025-030 (25 THRU 30 TONS)

Airflow (Cfm)	Available External Static Pressure (in. wg)																			
	0.2		0.4		0.6		0.8		1.0		1.2		1.4		1.6		1.8		2.0	
	rpm	bhp	rpm	bhp	rpm	bhp	rpm	bhp	rpm	bhp	rpm	bhp	rpm	bhp	rpm	bhp	rpm	bhp	rpm	bhp
5,000	374	0.98	443	1.20	503	1.45	558	1.70	607	1.96	653	2.23	695	2.49	734	2.76	771	3.03	806	3.30
6,000	421	1.45	482	1.68	538	1.93	589	2.20	636	2.47	680	2.75	721	3.04	759	3.33	796	3.62	831	3.91
7,000	471	2.04	526	2.28	576	2.54	623	2.81	668	3.10	710	3.39	749	3.69	787	4.00	823	4.31	857	4.62
8,000	522	2.78	572	3.03	619	3.29	662	3.57	704	3.86	743	4.16	781	4.47	817	4.79	851	5.11	885	5.44
9,000	574	3.66	621	3.92	664	4.19	704	4.47	743	4.77	780	5.08	815	5.40	850	5.72	883	6.05	915	6.39
10,000	628	4.71	671	4.97	711	5.25	748	5.54	784	5.84	819	6.15	853	6.47	885	6.81	917	7.14	948	7.49
11,000	682	5.91	722	6.19	759	6.48	795	6.77	828	7.08	861	7.40	893	7.72	924	8.06	954	8.40	983	8.75
12,000	736	7.30	774	7.59	809	7.88	842	8.18	874	8.49	905	8.82	935	9.15	965	9.48	993	9.83	1021	10.19
13,000	791	8.86	827	9.16	860	9.46	891	9.78	922	10.09	951	10.42	979	10.75	1007	11.10	1034	11.45	1061	11.80
14,000	846	10.61	880	10.93	912	11.24	941	11.56	970	11.88	998	12.21	1025	12.56	1052	12.90	1078	13.26	1103	13.62
15,000	902	12.56	934	12.89	964	13.21	992	13.54	1020	13.87	1046	14.21	1072	14.55	1098	14.91	1122	15.26	1147	15.63

48A2,A3,A6,A7 025-030 (25 THRU 30 TONS) (cont)

Airflow (Cfm)	Available External Static Pressure (in. wg)																			
	2.2		2.4		2.6		2.8		3.0		3.2		3.4		3.6		3.8		4.0	
	rpm	bhp	rpm	bhp	rpm	bhp	rpm	bhp	rpm	bhp	rpm	bhp	rpm	bhp	rpm	bhp	rpm	bhp	rpm	bhp
5,000	839	3.57	871	3.84	902	4.11	931	4.39	960	4.66	987	4.94	1014	5.22	1039	5.50	1064	5.78	1089	6.06
6,000	864	4.20	896	4.49	926	4.79	956	5.08	984	5.38	1012	5.68	1038	5.97	1064	6.27	1089	6.57	1114	6.87
7,000	890	4.93	921	5.24	951	5.55	980	5.87	1009	6.18	1036	6.50	1063	6.82	1088	7.14	1114	7.45	1138	7.77
8,000	917	5.76	948	6.09	977	6.42	1006	6.76	1034	7.09	1061	7.43	1088	7.76	1113	8.10	1138	8.43	1163	8.77
9,000	946	6.73	976	7.07	1005	7.42	1033	7.76	1061	8.11	1088	8.46	1114	8.82	1139	9.17	1164	9.52	1188	9.88
10,000	978	7.84	1007	8.19	1035	8.55	1063	8.91	1089	9.27	1116	9.63	1141	10.00	1166	10.37	1191	10.74	—	—
11,000	1012	9.10	1040	9.47	1067	9.83	1094	10.20	1120	10.57	1145	10.95	1170	11.33	1195	11.71	—	—	—	—
12,000	1048	10.54	1075	10.91	1102	11.28	1127	11.66	1152	12.04	1177	12.42	—	—	—	—	—	—	—	—
13,000	1087	12.17	1113	12.54	1138	12.91	1163	13.30	1187	13.68	—	—	—	—	—	—	—	—	—	—
14,000	1128	13.98	1153	14.36	1177	14.74	—	—	—	—	—	—	—	—	—	—	—	—	—	—
15,000	1171	16.00	1194	16.38	—	—	—	—	—	—	—	—	—	—	—	—	—	—	—	—

LEGEND

Bhp — Brake Horsepower

NOTES:

1. Fan performance is based on wet coils, economizer, roof curb, cabinet losses, and clean 2-in. filters.
2. Conversion — Bhp to watts:

$$\text{Watts} = \frac{\text{Bhp x 746}}{\text{Motor efficiency}}$$

3. VAV units with variable capacity compressor can operate down to 100 cfm/ton. VAV units with standard scroll compressor or Humidi-MiZer are limited to 200 cfm/ton. Operation may be additionally limited by entering coil conditions.

Fan Performance — Vertical Discharge Units (cont)

48A2,A3,A6,A7 035 (35 TONS)

AIRFLOW (Cfm)	AVAILABLE EXTERNAL STATIC PRESSURE (in. wg)																			
	0.2		0.4		0.6		0.8		1.0		1.2		1.4		1.6		1.8		2.0	
	rpm	bhp	rpm	bhp	rpm	bhp	rpm	bhp	rpm	bhp	rpm	bhp	rpm	bhp	rpm	bhp	rpm	bhp	rpm	bhp
7,000	534	2.46	584	2.80	630	3.13	674	3.48	716	3.82	756	4.16	793	4.50	829	4.83	863	5.17	896	5.49
8,000	590	3.27	635	3.63	677	3.99	718	4.35	757	4.72	794	5.08	830	5.45	864	5.81	897	6.18	929	6.54
9,000	646	4.23	687	4.62	726	5.00	764	5.38	800	5.76	835	6.15	869	6.54	902	6.93	934	7.31	964	7.70
10,000	704	5.35	742	5.77	778	6.17	812	6.57	846	6.97	879	7.38	911	7.78	942	8.19	972	8.60	1002	9.01
10,500	733	5.97	769	6.40	804	6.82	837	7.23	870	7.64	902	8.05	933	8.46	963	8.88	992	9.30	1021	9.72
11,000	762	6.63	797	7.08	830	7.51	863	7.93	894	8.35	925	8.77	955	9.19	984	9.62	1013	10.04	1041	10.47
12,000	820	8.09	853	8.56	884	9.01	915	9.46	944	9.90	973	10.34	1001	10.78	1029	11.22	1056	11.66	1083	12.10
13,000	879	9.72	909	10.22	939	10.70	968	11.17	996	11.63	1023	12.09	1050	12.55	1076	13.01	1102	13.46	1127	13.92
14,000	938	11.54	967	12.07	995	12.58	1022	13.07	1048	13.55	1074	14.03	1099	14.51	1124	14.98	1149	15.46	1173	15.93
15,000	997	13.56	1024	14.11	1051	14.64	1076	15.16	1102	15.67	1126	16.17	1150	16.66	1174	17.16	1197	17.65	1220	18.14
16,000	1056	15.78	1082	16.35	1107	16.91	1132	17.45	1156	17.98	1179	18.50	1202	19.02	1225	19.53	1247	20.04	1269	20.55
17,000	1116	18.20	1140	18.80	1164	19.38	1188	19.95	1210	20.50	1233	21.05	1255	21.58	1276	22.11	1298	22.64	—	—
17,500	1145	19.49	1170	20.10	1193	20.70	1216	21.28	1238	21.84	1260	22.40	1282	22.94	—	—	—	—	—	—

48A2,A3,A6,A7 035 (35 TONS) (cont)

AIRFLOW (Cfm)	AVAILABLE EXTERNAL STATIC PRESSURE (in. wg)																			
	2.2		2.4		2.6		2.8		3.0		3.2		3.4		3.6		3.8		4.0	
	rpm	bhp	rpm	bhp	rpm	bhp	rpm	bhp	rpm	bhp	rpm	bhp	rpm	bhp	rpm	bhp	rpm	bhp	rpm	bhp
7,000	927	5.81	956	6.13	985	6.45	1012	6.76	1039	7.06	1065	7.37	1090	7.67	1114	7.97	1138	8.26	1161	8.56
8,000	960	6.89	989	7.25	1018	7.60	1045	7.94	1072	8.29	1098	8.63	1122	8.96	1147	9.29	1170	9.62	1193	9.95
9,000	994	8.09	1023	8.47	1051	8.85	1078	9.23	1104	9.61	1130	9.98	1155	10.35	1179	10.71	1203	11.08	1226	11.44
10,000	1030	9.42	1058	9.82	1085	10.23	1112	10.64	1138	11.04	1163	11.44	1188	11.84	1212	12.24	1235	12.64	1258	13.03
10,500	1049	10.14	1077	10.56	1103	10.97	1129	11.39	1155	11.81	1180	12.23	1204	12.64	1228	13.05	1251	13.46	1274	13.87
11,000	1069	10.90	1095	11.33	1122	11.76	1147	12.18	1173	12.61	1197	13.04	1221	13.47	1245	13.89	1268	14.31	1291	14.73
12,000	1109	12.55	1135	13.00	1160	13.44	1185	13.89	1209	14.34	1233	14.79	1256	15.24	1279	15.69	—	—	—	—
13,000	1152	14.38	1176	14.84	1200	15.31	1224	15.77	1248	16.24	1271	16.70	1293	17.17	—	—	—	—	—	—
14,000	1196	16.41	1220	16.88	1243	17.36	1266	17.84	1288	18.32	—	—	—	—	—	—	—	—	—	—
15,000	1243	18.63	1265	19.12	1287	19.61	—	—	—	—	—	—	—	—	—	—	—	—	—	—
16,000	1290	21.06	—	—	—	—	—	—	—	—	—	—	—	—	—	—	—	—	—	—
17,000	—	—	—	—	—	—	—	—	—	—	—	—	—	—	—	—	—	—	—	—
17,500	—	—	—	—	—	—	—	—	—	—	—	—	—	—	—	—	—	—	—	—

48A2,A3,A6,A7040 (40 TONS)

Airflow (Cfm)	Available External Static Pressure (in. wg)																			
	0.2		0.4		0.6		0.8		1.0		1.2		1.4		1.6		1.8		2.0	
	rpm	bhp	rpm	bhp	rpm	bhp	rpm	bhp	rpm	bhp	rpm	bhp	rpm	bhp	rpm	bhp	rpm	bhp	rpm	bhp
8,000	502	2.90	550	3.30	596	3.71	639	4.12	680	4.54	720	4.97	759	5.40	796	5.85	832	6.31	867	6.77
9,000	552	3.81	595	4.24	637	4.67	677	5.11	715	5.55	752	6.00	788	6.45	823	6.92	857	7.39	890	7.87
10,000	602	4.89	642	5.34	680	5.80	717	6.26	752	6.73	787	7.20	821	7.67	854	8.16	886	8.64	917	9.14
11,000	653	6.15	689	6.62	725	7.11	759	7.59	792	8.08	825	8.58	856	9.07	887	9.57	918	10.08	947	10.59
12,000	704	7.60	738	8.09	771	8.60	803	9.11	834	9.63	865	10.14	895	10.66	924	11.18	952	11.71	980	12.24
13,000	756	9.24	788	9.76	818	10.29	848	10.83	878	11.36	906	11.90	935	12.44	962	12.99	989	13.53	1016	14.08
14,000	808	11.10	838	11.64	867	12.19	895	12.74	922	13.30	950	13.87	976	14.43	1002	15.00	1028	15.57	1053	16.14
15,000	861	13.18	888	13.74	915	14.31	942	14.88	968	15.46	994	16.05	1019	16.63	1044	17.22	1068	17.81	1093	18.40
16,000	914	15.49	940	16.06	965	16.65	990	17.24	1015	17.85	1039	18.45	1063	19.06	1087	19.67	1110	20.28	1133	20.89
17,000	967	18.03	991	18.62	1015	19.23	1039	19.85	1062	20.47	1086	21.09	1109	21.72	1131	22.35	1153	22.98	1175	23.61
18,000	1020	20.82	1043	21.43	1066	22.06	1088	22.69	1111	23.33	1133	23.97	1155	24.62	1176	25.27	1197	25.92	1219	26.58
19,000	1073	23.87	1095	24.50	1117	25.14	1138	25.79	1159	26.44	1180	27.11	1201	27.77	1222	28.45	1242	29.12	—	—
20,000	1127	27.18	1147	27.82	1168	28.48	1188	29.15	—	—	—	—	—	—	—	—	—	—	—	—

48A2,A3,A6,A7040 (40 TONS) (cont)

Airflow (Cfm)	Available External Static Pressure (in. wg)																			
	2.2		2.4		2.6		2.8		3.0		3.2		3.4		3.6		3.8		4.0	
	rpm	bhp	rpm	bhp	rpm	bhp	rpm	bhp	rpm	bhp	rpm	bhp	rpm	bhp	rpm	bhp	rpm	bhp	rpm	bhp
8,000	901	7.24	933	7.72	965	8.20	995	8.69	1024	9.19	1053	9.69	1081	10.19	1108	10.70	1134	11.21	1159	11.73
9,000	923	8.35	954	8.85	985	9.35	1014	9.86	1043	10.37	1072	10.89	1099	11.41	1126	11.94	1152	12.47	1177	13.00
10,000	948	9.64	978	10.15	1007	10.66	1036	11.19	1064	11.71	1092	12.25	1119	12.78	1145	13.33	1171	13.88	1196	14.43
11,000	976	11.11	1005	11.63	1033	12.16	1061	12.70	1088	13.24	1114	13.79	1140	14.34	1166	14.90	1191	15.46	1216	16.03
12,000	1008	12.77	1035	13.31	1062	13.86	1088	14.41	1114	14.97	1139	15.53	1164	16.09	1189	16.67	1213	17.24	1237	17.83
13,000	1042	14.64	1068	15.19	1093	15.76	1118	16.32	1143	16.89	1167	17.47	1191	18.05	1215	18.64	1238	19.23	1262	19.82
14,000	1078	16.71	1103	17.28	1127	17.86	1151	18.45	1174	19.03	1198	19.63	1221	20.22	1244	20.82	1266	21.43	1288	22.04
15,000	1116	19.00	1140	19.59	1163	20.19	1186	20.79	1208	21.40	1230	22.00	1253	22.62	1274	23.23	1296	23.85	—	—
16,000	1156	21.51	1178	22.12	1200	22.74	1222	23.36	1244	23.98	1265	24.61	1286	25.24	—	—	—	—	—	—
17,000	1197	24.25	1218	24.89	1240	25.52	1261	26.17	1281	26.81	—	—	—	—	—	—	—	—	—	—
18,000	1239	27.24	1260	27.89	1280	28.55	—	—	—	—	—	—	—	—	—	—	—	—	—	—
19,000	—	—	—	—	—	—	—	—	—	—	—	—	—	—	—	—	—	—	—	—
20,000	—	—	—	—	—	—	—	—	—	—	—	—	—	—	—	—	—	—	—	—

LEGEND

Bhp — Brake Horsepower

NOTES:

1. Fan performance is based on wet coils, economizer, roof curb, cabinet losses, and clean 2-in. filters.
2. Conversion — Bhp to watts:

$$\text{Watts} = \frac{\text{Bhp x 746}}{\text{Motor efficiency}}$$

3. VAV units with variable capacity compressor can operate down to 100 cfm/ton. VAV units with standard scroll compressor or Humidi-MiZer are limited to 200 cfm/ton. Operation may be additionally limited by entering coil conditions.

Fan Performance — Vertical Discharge Units (cont)

48A2,A3,A6,A7050 (50 TONS)

Airflow (Cfm)	Available External Static Pressure (in. wg)																			
	0.2		0.4		0.6		0.8		1.0		1.2		1.4		1.6		1.8		2.0	
	rpm	bhp	rpm	bhp	rpm	bhp	rpm	bhp	rpm	bhp	rpm	bhp	rpm	bhp	rpm	bhp	rpm	bhp	rpm	bhp
10,000	611	5.00	651	5.45	689	5.91	725	6.37	761	6.84	795	7.31	829	7.79	861	8.27	893	8.76	925	9.26
11,000	662	6.27	699	6.75	734	7.23	768	7.72	801	8.21	833	8.71	865	9.20	895	9.71	925	10.21	955	10.73
12,000	714	7.74	748	8.24	780	8.75	812	9.26	843	9.77	873	10.29	903	10.81	932	11.33	960	11.86	988	12.39
13,000	766	9.41	798	9.93	828	10.46	858	11.00	887	11.54	916	12.08	944	12.62	971	13.16	998	13.71	1024	14.26
14,000	819	11.29	848	11.84	877	12.39	905	12.95	932	13.51	959	14.07	986	14.63	1012	15.20	1037	15.77	1062	16.34
15,000	872	13.40	899	13.96	926	14.54	953	15.11	979	15.70	1004	16.28	1029	16.87	1054	17.46	1078	18.05	1102	18.64
16,000	925	15.74	951	16.32	976	16.91	1001	17.51	1026	18.12	1050	18.72	1074	19.33	1097	19.94	1121	20.55	1143	21.17
17,000	979	18.32	1003	18.92	1027	19.53	1051	20.15	1074	20.77	1097	21.40	1120	22.03	1142	22.66	1164	23.29	1186	23.93
18,000	1032	21.15	1055	21.77	1078	22.40	1100	23.04	1123	23.68	1145	24.33	1166	24.98	1188	25.63	1209	26.28	1230	26.93
19,000	1086	24.24	1108	24.88	1129	25.52	1151	26.18	1172	26.84	1193	27.51	1214	28.18	1234	28.85	1255	29.52	1275	30.19
20,000	1140	27.60	1161	28.25	1181	28.92	1202	29.59	1222	30.27	1242	30.95	1262	31.64	1281	32.33	—	—	—	—

48A2,A3,A6,A7050 (50 TONS) (cont)

Airflow (Cfm)	Available External Static Pressure (in. wg)																			
	2.2		2.4		2.6		2.8		3.0		3.2		3.4		3.6		3.8		4.0	
	rpm	bhp	rpm	bhp	rpm	bhp	rpm	bhp	rpm	bhp	rpm	bhp	rpm	bhp	rpm	bhp	rpm	bhp	rpm	bhp
10,000	955	9.76	985	10.27	1014	10.79	1043	11.31	1071	11.84	1098	12.37	1125	12.91	1151	13.46	1177	14.01	1202	14.56
11,000	984	11.25	1012	11.77	1040	12.30	1068	12.84	1095	13.38	1121	13.93	1147	14.49	1172	15.05	1197	15.61	1222	16.18
12,000	1016	12.93	1043	13.47	1069	14.02	1095	14.57	1121	15.13	1147	15.69	1172	16.26	1196	16.83	1220	17.41	1244	18.00
13,000	1050	14.82	1076	15.38	1101	15.94	1126	16.51	1151	17.08	1175	17.66	1199	18.24	1223	18.83	1246	19.42	1269	20.02
14,000	1087	16.92	1111	17.49	1136	18.07	1159	18.66	1183	19.25	1206	19.84	1229	20.44	1252	21.04	1274	21.64	1296	22.25
15,000	1126	19.23	1149	19.83	1172	20.43	1195	21.03	1217	21.64	1239	22.25	1261	22.86	1283	23.48	—	—	—	—
16,000	1166	21.78	1188	22.40	1210	23.01	1232	23.64	1253	24.26	1275	24.89	1296	25.52	—	—	—	—	—	—
17,000	1208	24.56	1229	25.20	1250	25.84	1271	26.48	1291	27.12	—	—	—	—	—	—	—	—	—	—
18,000	1250	27.59	1271	28.25	1291	28.91	—	—	—	—	—	—	—	—	—	—	—	—	—	—
19,000	1294	30.87	—	—	—	—	—	—	—	—	—	—	—	—	—	—	—	—	—	—
20,000	—	—	—	—	—	—	—	—	—	—	—	—	—	—	—	—	—	—	—	—

48A2,A3,A6,A7060 (60 TONS)

Airflow (Cfm)	Available External Static Pressure (in. wg)																			
	0.2		0.4		0.6		0.8		1.0		1.2		1.4		1.6		1.8		2.0	
	rpm	bhp	rpm	bhp	rpm	bhp	rpm	bhp	rpm	bhp	rpm	bhp	rpm	bhp	rpm	bhp	rpm	bhp	rpm	bhp
12,000	476	4.33	534	5.04	585	5.78	632	6.56	674	7.39	714	8.24	751	9.12	786	10.02	819	10.93	851	11.85
14,000	536	6.19	588	6.96	636	7.74	680	8.56	720	9.41	758	10.30	793	11.21	827	12.15	859	13.11	890	14.08
15,000	566	7.28	617	8.09	662	8.90	704	9.73	744	10.59	781	11.50	816	12.42	849	13.38	881	14.36	911	15.35
16,000	597	8.48	645	9.34	689	10.17	730	11.02	768	11.90	804	12.82	839	13.76	871	14.73	902	15.72	932	16.73
17,000	628	9.80	674	10.71	717	11.58	756	12.45	793	13.34	829	14.27	862	15.23	894	16.21	925	17.21	954	18.24
18,000	659	11.25	704	12.21	745	13.11	783	14.00	819	14.91	853	15.85	886	16.82	918	17.82	948	18.84	977	19.88
19,000	691	12.82	734	13.84	773	14.77	810	15.69	845	16.62	879	17.58	911	18.56	942	19.57	971	20.60	1000	21.65
20,000	723	14.53	764	15.60	802	16.57	838	17.52	872	18.47	905	19.44	936	20.44	966	21.45	995	22.50	1023	23.57
21,000	755	16.37	794	17.49	831	18.51	866	19.49	899	20.47	931	21.46	961	22.47	991	23.50	1019	24.55	1047	25.63
22,000	787	18.35	825	19.53	861	20.59	894	21.60	927	22.61	958	23.62	987	24.64	1016	25.69	1044	26.76	1071	27.84
23,000	819	20.48	856	21.71	890	22.81	923	23.87	954	24.90	985	25.93	1014	26.97	1042	28.03	1069	29.11	1096	30.21
24,000	851	22.75	887	24.04	920	25.19	952	26.28	983	27.34	1012	28.40	1041	29.46	1068	30.54	1095	31.63	1121	32.74
25,000	883	25.17	918	26.52	951	27.72	982	28.84	1011	29.94	1040	31.02	1068	32.11	1095	33.21	1121	34.31	1147	35.44
26,000	916	27.76	950	29.15	981	30.40	1011	31.57	1040	32.70	1068	33.81	1095	34.92	1122	36.04	1147	37.16	1172	38.30
27,000	948	30.49	981	31.95	1012	33.24	1041	34.46	1070	35.62	1097	36.76	1123	37.90	1149	39.04	1174	40.18	1199	41.34

48A2,A3,A6,A7060 (60 TONS) (cont)

Airflow (Cfm)	Available External Static Pressure (in. wg)																			
	2.2		2.4		2.6		2.8		3.0		3.2		3.4		3.6		3.8		4.0	
	rpm	bhp	rpm	bhp	rpm	bhp	rpm	bhp	rpm	bhp	rpm	bhp	rpm	bhp	rpm	bhp	rpm	bhp	rpm	bhp
12,000	881	12.78	911	13.72	939	14.67	967	15.62	993	16.58	1019	17.54	1045	18.51	1069	19.48	1093	20.45	1117	21.43
14,000	920	15.06	948	16.06	976	17.07	1003	18.08	1029	19.11	1054	20.13	1079	21.17	1103	22.21	1126	23.26	1149	24.31
15,000	940	16.36	968	17.38	996	18.41	1022	19.45	1048	20.50	1073	21.56	1097	22.63	1121	23.70	1144	24.78	1167	25.86
16,000	961	17.76	989	18.80	1016	19.86	1042	20.92	1067	22.00	1092	23.08	1116	24.17	1140	25.28	1162	26.38	1185	27.49
17,000	983	19.28	1010	20.34	1036	21.42	1062	22.51	1087	23.60	1112	24.71	1135	25.83	1159	26.95	1181	28.09	—	—
18,000	1005	20.94	1032	22.01	1058	23.11	1083	24.21	1108	25.33	1132	26.46	1156	27.60	1178	28.74	—	—	—	—
19,000	1027	22.72	1054	23.81	1080	24.92	1105	26.04	1129	27.18	1153	28.33	1176	29.48	1199	30.65	—	—	—	—
20,000	1050	24.65	1076	25.76	1102	26.88	1126	28.01	1151	29.17	1174	30.33	1197	31.50	—	—	—	—	—	—
21,000	1073	26.73	1099	27.84	1124	28.97	1149	30.13	1173	31.29	1196	32.47	—	—	—	—	—	—	—	—
22,000	1097	28.95	1123	30.08	1147	31.22	1172	32.39	1195	33.56	—	—	—	—	—	—	—	—	—	—
23,000	1122	31.33	1147	32.47	1171	33.63	1195	34.80	—	—	—	—	—	—	—	—	—	—	—	—
24,000	1146	33.87	1171	35.02	1195	36.19	—	—	—	—	—	—	—	—	—	—	—	—	—	—
25,000	1171	36.58	1196	37.74	—	—	—	—	—	—	—	—	—	—	—	—	—	—	—	—
26,000	1197	39.46	—	—	—	—	—	—	—	—	—	—	—	—	—	—	—	—	—	—
27,000	—	—	—	—	—	—	—	—	—	—	—	—	—	—	—	—	—	—	—	—

LEGEND

Bhp — Brake Horsepower

NOTES:

1. Fan performance is based on wet coils, economizer, roof curb, cabinet losses, and clean 2-in. filters.
2. Conversion — Bhp to watts:

$$\text{Watts} = \frac{\text{Bhp} \times 746}{\text{Motor efficiency}}$$

3. VAV units with variable capacity compressor can operate down to 100 cfm/ton. VAV units with standard scroll compressor or Humidi-MiZer are limited to 200 cfm/ton. Operation may be additionally limited by entering coil conditions.

Fan Performance — Vertical Discharge Units (cont)

50A2,A3,A6,A7 020 (20 TONS)

Airflow (Cfm)	Available External Static Pressure (in. wg)																			
	0.2		0.4		0.6		0.8		1.0		1.2		1.4		1.6		1.8		2.0	
	rpm	bhp	rpm	bhp	rpm	bhp	rpm	bhp	rpm	bhp	rpm	bhp	rpm	bhp	rpm	bhp	rpm	bhp	rpm	bhp
4,000	311	0.54	390	0.71	457	0.88	515	1.05	567	1.21	613	1.38	656	1.55	696	1.71	733	1.88	768	2.04
5,000	347	0.84	417	1.02	480	1.21	536	1.40	587	1.59	633	1.78	676	1.97	716	2.16	753	2.34	788	2.52
6,000	387	1.25	450	1.43	507	1.63	560	1.84	609	2.05	654	2.26	696	2.47	735	2.68	773	2.88	808	3.09
7,000	430	1.77	488	1.96	540	2.17	588	2.38	634	2.61	677	2.83	718	3.06	756	3.29	793	3.51	828	3.74
7,500	452	2.07	507	2.27	557	2.48	604	2.70	648	2.93	690	3.16	730	3.40	768	3.63	804	3.87	839	4.10
8,000	474	2.41	528	2.61	576	2.82	620	3.04	663	3.28	704	3.52	743	3.76	780	4.00	816	4.24	850	4.48
9,000	519	3.19	570	3.39	614	3.60	656	3.83	696	4.07	734	4.32	771	4.57	806	4.82	840	5.08	873	5.34
10,000	565	4.10	613	4.31	655	4.53	694	4.76	731	5.00	767	5.26	802	5.51	835	5.78	868	6.04	900	6.31

50A2,A3,A6,A7 020 (20 TONS) (cont)

Airflow (Cfm)	Available External Static Pressure (in. wg)																			
	2.2		2.4		2.6		2.8		3.0		3.2		3.4		3.6		3.8		4.0	
	rpm	bhp	rpm	bhp	rpm	bhp	rpm	bhp	rpm	bhp	rpm	bhp	rpm	bhp	rpm	bhp	rpm	bhp	rpm	bhp
4,000	802	2.21	833	2.38	864	2.55	893	2.71	921	2.88	949	3.06	975	3.23	1001	3.40	1026	3.58	1050	3.75
5,000	822	2.71	854	2.89	885	3.08	914	3.26	943	3.45	970	3.64	997	3.82	1023	4.01	1048	4.20	1072	4.39
6,000	842	3.29	874	3.50	905	3.70	934	3.90	963	4.10	991	4.31	1017	4.51	1043	4.71	1069	4.91	1093	5.12
7,000	862	3.96	894	4.19	924	4.41	954	4.63	983	4.85	1010	5.07	1037	5.29	1063	5.51	1089	5.72	1113	5.94
7,500	872	4.33	904	4.56	934	4.79	964	5.02	993	5.25	1020	5.48	1047	5.71	1073	5.94	1099	6.16	1123	6.39
8,000	883	4.73	914	4.97	945	5.21	974	5.45	1003	5.68	1030	5.92	1057	6.16	1083	6.39	1108	6.63	1133	6.87
9,000	905	5.60	936	5.85	966	6.11	995	6.37	1023	6.62	1051	6.88	1077	7.13	1103	7.38	1129	7.64	1153	7.89
10,000	931	6.58	961	6.85	990	7.13	1018	7.40	1046	7.67	1073	7.94	1099	8.21	1124	8.48	1149	8.75	1174	9.02

50A2,A3,A6,A7 025-030 (25 THRU 30 TONS)

Airflow (Cfm)	Available External Static Pressure (in. wg)																			
	0.2		0.4		0.6		0.8		1.0		1.2		1.4		1.6		1.8		2.0	
	rpm	bhp	rpm	bhp	rpm	bhp	rpm	bhp	rpm	bhp	rpm	bhp	rpm	bhp	rpm	bhp	rpm	bhp	rpm	bhp
5,000	352	0.85	422	1.03	484	1.22	540	1.42	590	1.61	636	1.79	678	1.98	718	2.17	755	2.35	791	2.54
6,000	394	1.26	456	1.45	513	1.65	565	1.86	613	2.07	658	2.28	700	2.49	739	2.70	776	2.90	811	3.11
7,000	438	1.79	495	1.98	546	2.19	594	2.41	640	2.64	682	2.86	723	3.09	761	3.32	798	3.54	833	3.77
8,000	483	2.44	536	2.64	583	2.85	628	3.08	670	3.32	710	3.55	749	3.80	786	4.04	821	4.28	855	4.52
9,000	530	3.23	579	3.43	623	3.65	664	3.88	704	4.12	741	4.37	778	4.62	813	4.88	847	5.13	880	5.39
10,000	577	4.15	624	4.36	665	4.58	703	4.82	740	5.06	776	5.32	810	5.58	843	5.84	876	6.11	907	6.38
11,000	625	5.22	669	5.44	708	5.67	744	5.91	779	6.16	813	6.41	845	6.68	877	6.95	907	7.22	937	7.50
12,000	674	6.45	715	6.67	753	6.90	787	7.15	820	7.40	851	7.67	882	7.93	912	8.21	941	8.49	970	8.78
13,000	722	7.85	762	8.07	798	8.30	831	8.55	862	8.81	892	9.08	921	9.35	950	9.63	977	9.92	1005	10.21
14,000	771	9.41	810	9.64	844	9.88	875	10.13	905	10.39	934	10.66	962	10.94	989	11.22	1015	11.51	1041	11.81
15,000	821	11.15	857	11.38	890	11.62	921	11.88	949	12.14	977	12.42	1004	12.70	1030	12.99	1055	13.28	1080	13.58

50A2,A3,A6,A7 025-030 (25 THRU 30 TONS) (cont)

Airflow (Cfm)	Available External Static Pressure (in. wg)																			
	2.2		2.4		2.6		2.8		3.0		3.2		3.4		3.6		3.8		4.0	
	rpm	bhp	rpm	bhp	rpm	bhp	rpm	bhp	rpm	bhp	rpm	bhp	rpm	bhp	rpm	bhp	rpm	bhp	rpm	bhp
5,000	824	2.72	856	2.91	887	3.09	916	3.28	945	3.46	972	3.65	999	3.83	1024	4.02	1049	4.21	1074	4.40
6,000	845	3.31	877	3.52	908	3.72	937	3.92	966	4.12	993	4.32	1020	4.53	1046	4.73	1071	4.93	1096	5.14
7,000	866	3.99	898	4.21	928	4.43	958	4.66	986	4.88	1014	5.10	1041	5.31	1067	5.53	1092	5.75	1116	5.97
8,000	888	4.77	919	5.01	950	5.25	979	5.49	1007	5.72	1035	5.96	1061	6.20	1087	6.43	1113	6.67	1137	6.90
9,000	912	5.65	942	5.90	972	6.16	1001	6.42	1029	6.67	1056	6.93	1083	7.18	1108	7.43	1134	7.69	1158	7.94
10,000	938	6.65	968	6.92	997	7.19	1025	7.46	1052	7.73	1079	8.00	1105	8.27	1130	8.54	1155	8.81	1180	9.08
11,000	967	7.78	995	8.07	1023	8.35	1051	8.63	1077	8.92	1103	9.20	1129	9.49	1154	9.77	1178	10.06	—	—
12,000	998	9.07	1025	9.35	1052	9.65	1078	9.94	1104	10.24	1130	10.54	1154	10.83	1179	11.13	—	—	—	—
13,000	1031	10.50	1058	10.80	1083	11.10	1109	11.40	1133	11.71	1158	12.01	1182	12.32	—	—	—	—	—	—
14,000	1067	12.10	1092	12.41	1117	12.71	1141	13.02	1165	13.33	1188	13.65	—	—	—	—	—	—	—	—
15,000	1104	13.88	1128	14.19	1152	14.50	1175	14.81	1198	15.13	—	—	—	—	—	—	—	—	—	—

LEGEND

Bhp — Brake Horsepower

NOTES:

1. Fan performance is based on wet coils, economizer, roof curb, cabinet losses, and clean 2-in. filters.
2. Conversion — Bhp to watts:

$$\text{Watts} = \frac{\text{Bhp} \times 746}{\text{Motor efficiency}}$$

3. VAV units with variable capacity compressor can operate down to 100 cfm/ton. VAV units with standard scroll compressor or Humidi-MiZer are limited to 200 cfm/ton. Operation may be additionally limited by entering coil conditions.

Fan Performance — Vertical Discharge Units (cont)

50A2,A3,A6,A7035 (35 TONS)

AIRFLOW (Cfm)	AVAILABLE EXTERNAL STATIC PRESSURE (in. wg)																			
	0.2		0.4		0.6		0.8		1.0		1.2		1.4		1.6		1.8		2.0	
	rpm	bhp	rpm	bhp	rpm	bhp	rpm	bhp	rpm	bhp	rpm	bhp	rpm	bhp	rpm	bhp	rpm	bhp	rpm	bhp
7,000	503	1.96	553	2.22	601	2.47	646	2.72	689	2.97	730	3.22	768	3.46	804	3.70	839	3.94	872	4.17
8,000	553	2.62	599	2.89	643	3.16	684	3.43	724	3.70	763	3.97	799	4.23	834	4.50	868	4.76	901	5.02
9,000	605	3.39	647	3.68	687	3.97	726	4.26	763	4.55	798	4.83	833	5.12	867	5.40	899	5.68	930	5.96
10,000	657	4.29	696	4.61	733	4.91	769	5.22	803	5.52	837	5.82	870	6.12	901	6.42	932	6.72	962	7.02
10,500	684	4.80	721	5.12	757	5.43	791	5.75	825	6.06	857	6.37	889	6.68	920	6.98	950	7.29	979	7.60
11,000	710	5.33	747	5.66	781	5.99	814	6.31	847	6.63	878	6.95	909	7.26	939	7.58	968	7.89	997	8.21
12,000	764	6.52	798	6.86	830	7.21	861	7.54	891	7.88	921	8.21	950	8.54	978	8.87	1006	9.20	1033	9.53
13,000	818	7.85	849	8.21	880	8.57	909	8.92	938	9.27	966	9.62	993	9.97	1020	10.31	1046	10.66	1072	11.00
14,000	872	9.33	901	9.71	930	10.09	958	10.45	985	10.82	1012	11.19	1037	11.55	1063	11.91	1088	12.27	1113	12.63
15,000	926	10.98	954	11.37	981	11.76	1008	12.15	1033	12.53	1059	12.91	1083	13.28	1108	13.66	1131	14.03	1155	14.40
16,000	980	12.79	1007	13.20	1033	13.60	1058	14.00	1082	14.40	1106	14.79	1130	15.18	1153	15.57	1176	15.96	1199	16.35
17,000	1035	14.77	1060	15.19	1085	15.61	1109	16.03	1132	16.44	1155	16.84	1178	17.25	1200	17.65	1222	18.05	1243	18.46
17,500	1062	15.83	1087	16.25	1111	16.68	1134	17.10	1157	17.52	1180	17.94	1202	18.35	1224	18.76	1245	19.17	1266	19.58

50A2,A3,A6,A7035 (35 TONS) (cont)

AIRFLOW (Cfm)	AVAILABLE EXTERNAL STATIC PRESSURE (in. wg)																			
	2.2		2.4		2.6		2.8		3.0		3.2		3.4		3.6		3.8		4.0	
	rpm	bhp	rpm	bhp	rpm	bhp	rpm	bhp	rpm	bhp	rpm	bhp	rpm	bhp	rpm	bhp	rpm	bhp	rpm	bhp
7,000	903	4.40	933	4.62	962	4.84	990	5.06	1017	5.27	1043	5.48	1068	5.69	1092	5.89	1116	6.09	1139	6.28
8,000	932	5.27	962	5.52	991	5.77	1019	6.02	1045	6.26	1071	6.50	1097	6.73	1121	6.96	1145	7.19	1168	7.42
9,000	961	6.24	990	6.52	1019	6.79	1047	7.06	1073	7.33	1099	7.59	1125	7.85	1149	8.11	1173	8.37	1196	8.62
10,000	992	7.32	1020	7.62	1048	7.91	1075	8.20	1102	8.49	1127	8.78	1152	9.07	1177	9.35	1201	9.63	1224	9.91
10,500	1008	7.90	1036	8.21	1063	8.51	1090	8.82	1116	9.12	1142	9.41	1166	9.71	1191	10.01	1214	10.30	1238	10.59
11,000	1025	8.52	1052	8.84	1079	9.15	1105	9.46	1131	9.77	1156	10.08	1181	10.39	1205	10.69	1228	10.99	1252	11.29
12,000	1060	9.86	1086	10.19	1112	10.52	1137	10.85	1162	11.17	1187	11.50	1211	11.82	1234	12.15	1257	12.47	1280	12.79
13,000	1097	11.35	1122	11.69	1147	12.03	1171	12.37	1195	12.72	1219	13.06	1242	13.40	1265	13.74	1287	14.08	—	—
14,000	1137	12.98	1161	13.34	1184	13.69	1208	14.05	1231	14.41	1253	14.76	1276	15.12	1298	15.47	—	—	—	—
15,000	1178	14.77	1201	15.15	1223	15.51	1246	15.88	1268	16.25	1289	16.62	—	—	—	—	—	—	—	—
16,000	1221	16.73	1243	17.11	1264	17.50	1286	17.88	—	—	—	—	—	—	—	—	—	—	—	—
17,000	1265	18.85	1286	19.25	—	—	—	—	—	—	—	—	—	—	—	—	—	—	—	—
17,500	1287	19.98	—	—	—	—	—	—	—	—	—	—	—	—	—	—	—	—	—	—

50A2,A3,A6,A7040 (40 TONS)

Airflow (Cfm)	Available External Static Pressure (in. wg)																			
	0.2		0.4		0.6		0.8		1.0		1.2		1.4		1.6		1.8		2.0	
	rpm	bhp	rpm	bhp	rpm	bhp	rpm	bhp	rpm	bhp	rpm	bhp	rpm	bhp	rpm	bhp	rpm	bhp	rpm	bhp
8,000	475	2.69	523	3.08	569	3.47	612	3.86	653	4.26	692	4.66	730	5.07	767	5.49	802	5.92	836	6.36
9,000	521	3.53	565	3.94	606	4.36	646	4.78	684	5.20	721	5.63	757	6.06	791	6.49	825	6.94	857	7.39
10,000	568	4.52	608	4.96	646	5.40	683	5.84	719	6.29	753	6.74	787	7.20	819	7.65	851	8.11	882	8.58
11,000	615	5.68	652	6.14	687	6.60	722	7.07	755	7.55	788	8.02	819	8.50	850	8.97	880	9.46	909	9.94
12,000	663	7.01	697	7.49	730	7.98	762	8.47	794	8.97	824	9.47	854	9.96	883	10.47	912	10.97	939	11.48
13,000	712	8.53	743	9.03	774	9.54	804	10.05	834	10.57	862	11.09	891	11.61	918	12.13	945	12.66	972	13.19
14,000	760	10.24	790	10.76	819	11.29	847	11.82	875	12.36	902	12.90	929	13.45	955	13.99	981	14.54	1006	15.09
15,000	809	12.15	837	12.69	864	13.24	891	13.79	917	14.35	943	14.91	968	15.48	993	16.04	1018	16.62	1042	17.18
16,000	859	14.27	885	14.83	910	15.40	936	15.97	960	16.55	985	17.13	1009	17.71	1033	18.30	1056	18.89	1079	19.48
17,000	908	16.61	933	17.19	957	17.77	981	18.36	1004	18.96	1028	19.56	1051	20.16	1073	20.77	1096	21.38	1118	21.99
18,000	958	19.18	981	19.77	1004	20.37	1027	20.98	1049	21.60	1071	22.22	1093	22.84	1115	23.46	1136	24.09	1157	24.72
19,000	1007	21.98	1030	22.59	1052	23.21	1073	23.84	1095	24.47	1116	25.10	1137	25.74	1157	26.39	1178	27.04	1198	27.68
20,000	1057	25.02	1079	25.65	1099	26.29	1120	26.93	1140	27.58	1161	28.23	1181	28.89	—	—	—	—	—	—

50A2,A3,A6,A7040 (40 TONS) (cont)

Airflow (Cfm)	Available External Static Pressure (in. wg)																			
	2.2		2.4		2.6		2.8		3.0		3.2		3.4		3.6		3.8		4.0	
	rpm	bhp	rpm	bhp	rpm	bhp	rpm	bhp	rpm	bhp	rpm	bhp	rpm	bhp	rpm	bhp	rpm	bhp	rpm	bhp
8,000	870	6.81	902	7.26	933	7.73	964	8.20	993	8.67	1022	9.16	1050	9.65	1077	10.14	1104	10.64	1129	11.15
9,000	889	7.85	920	8.31	950	8.79	979	9.27	1008	9.75	1036	10.25	1064	10.75	1090	11.26	1117	11.77	1142	12.29
10,000	912	9.05	941	9.53	970	10.02	998	10.51	1026	11.00	1053	11.51	1080	12.02	1106	12.54	1131	13.06	1157	13.59
11,000	938	10.43	966	10.92	993	11.42	1020	11.93	1047	12.44	1073	12.95	1099	13.47	1124	14.00	1149	14.53	1173	15.07
12,000	967	11.98	993	12.49	1020	13.01	1046	13.53	1071	14.05	1096	14.58	1121	15.11	1145	15.65	1169	16.19	1192	16.74
13,000	998	13.72	1023	14.25	1049	14.78	1073	15.32	1098	15.86	1121	16.40	1145	16.95	1168	17.50	1191	18.06	1214	18.62
14,000	1031	15.64	1055	16.19	1079	16.75	1103	17.30	1126	17.86	1149	18.42	1172	18.98	1195	19.55	1217	20.12	1239	20.69
15,000	1066	17.76	1089	18.33	1112	18.90	1135	19.48	1157	20.06	1179	20.63	1201	21.21	1223	21.80	1244	22.38	1265	22.97
16,000	1102	20.08	1124	20.67	1147	21.26	1168	21.86	1190	22.46	1211	23.06	1232	23.66	1253	24.26	1274	24.86	1294	25.46
17,000	1140	22.61	1161	23.22	1182	23.84	1203	24.45	1224	25.07	1245	25.69	1265	26.31	1285	26.93	—	—	—	—
18,000	1178	25.36	1199	25.99	1219	26.63	1240	27.26	1260	27.90	1279	28.54	1299	29.18	—	—	—	—	—	—
19,000	1218	28.34	1238	28.99	—	—	—	—	—	—	—	—	—	—	—	—	—	—	—	—
20,000	—	—	—	—	—	—	—	—	—	—	—	—	—	—	—	—	—	—	—	—

LEGEND

Bhp — Brake Horsepower

NOTES:

1. Fan performance is based on wet coils, economizer, roof curb, cabinet losses, and clean 2-in. filters.
2. Conversion — Bhp to watts:

$$\text{Watts} = \frac{\text{Bhp x 746}}{\text{Motor efficiency}}$$

3. VAV units with variable capacity compressor can operate down to 100 cfm/ton. VAV units with standard scroll compressor or Humidi-MiZer are limited to 200 cfm/ton. Operation may be additionally limited by entering coil conditions.

Fan Performance — Vertical Discharge Units (cont)

50A2,A3,A6,A7050 (50 TONS)

Airflow (Cfm)	Available External Static Pressure (in. wg)																			
	0.2		0.4		0.6		0.8		1.0		1.2		1.4		1.6		1.8		2.0	
	rpm	bhp	rpm	bhp	rpm	bhp	rpm	bhp	rpm	bhp	rpm	bhp	rpm	bhp	rpm	bhp	rpm	bhp	rpm	bhp
10,000	577	4.62	617	5.06	655	5.50	692	5.95	727	6.40	761	6.85	794	7.30	827	7.76	858	8.22	889	8.69
11,000	625	5.80	661	6.26	697	6.73	731	7.20	764	7.67	796	8.14	827	8.62	858	9.10	888	9.58	917	10.07
12,000	673	7.15	707	7.63	740	8.12	772	8.62	803	9.11	833	9.61	863	10.11	891	10.61	920	11.12	947	11.62
13,000	722	8.69	753	9.19	784	9.70	814	10.22	843	10.74	872	11.26	900	11.78	927	12.31	954	12.83	980	13.36
14,000	771	10.43	800	10.95	829	11.48	857	12.01	885	12.55	912	13.10	938	13.64	964	14.19	990	14.74	1015	15.29
15,000	821	12.37	848	12.91	875	13.46	901	14.01	928	14.57	953	15.14	978	15.70	1003	16.27	1028	16.84	1052	17.41
16,000	870	14.52	896	15.08	922	15.65	947	16.22	971	16.80	996	17.39	1020	17.97	1043	18.56	1066	19.15	1089	19.75
17,000	920	16.89	945	17.48	969	18.06	993	18.65	1016	19.25	1039	19.86	1062	20.46	1084	21.07	1107	21.68	1129	22.30
18,000	971	19.50	994	20.10	1017	20.71	1039	21.32	1061	21.93	1083	22.55	1105	23.18	1126	23.80	1148	24.44	1169	25.07
19,000	1021	22.35	1043	22.96	1065	23.59	1086	24.21	1107	24.85	1128	25.49	1149	26.13	1170	26.78	1190	27.42	1210	28.08
20,000	1071	25.43	1092	26.07	1113	26.71	1133	27.36	1154	28.01	1174	28.66	1194	29.33	1213	29.99	1233	30.65	1252	31.33

50A2,A3,A6,A7050 (50 TONS) (cont)

Airflow (Cfm)	Available External Static Pressure (in. wg)																			
	2.2		2.4		2.6		2.8		3.0		3.2		3.4		3.6		3.8		4.0	
	rpm	bhp	rpm	bhp	rpm	bhp	rpm	bhp	rpm	bhp	rpm	bhp	rpm	bhp	rpm	bhp	rpm	bhp	rpm	bhp
10,000	919	9.17	948	9.64	977	10.13	1005	10.62	1032	11.12	1059	11.63	1086	12.14	1112	12.66	1137	13.18	1162	13.71
11,000	945	10.56	973	11.05	1001	11.55	1027	12.06	1054	12.57	1080	13.09	1105	13.61	1130	14.14	1155	14.67	1179	15.21
12,000	975	12.13	1001	12.64	1027	13.16	1053	13.68	1078	14.21	1103	14.74	1128	15.27	1152	15.81	1176	16.35	1199	16.90
13,000	1006	13.89	1032	14.42	1057	14.96	1081	15.49	1105	16.03	1129	16.58	1153	17.12	1176	17.68	1199	18.23	1221	18.80
14,000	1040	15.84	1064	16.39	1088	16.94	1112	17.50	1135	18.06	1158	18.62	1180	19.18	1203	19.75	1225	20.32	1246	20.90
15,000	1075	17.99	1098	18.56	1121	19.13	1144	19.71	1166	20.29	1188	20.86	1210	21.45	1231	22.03	1253	22.62	1274	23.21
16,000	1112	20.34	1134	20.93	1156	21.53	1178	22.12	1199	22.72	1221	23.32	1241	23.92	1262	24.52	1283	25.13	—	—
17,000	1150	22.91	1172	23.52	1193	24.14	1214	24.76	1234	25.37	1255	25.99	1275	26.61	1295	27.23	—	—	—	—
18,000	1190	25.70	1210	26.34	1230	26.97	1250	27.61	1270	28.25	1290	28.89	—	—	—	—	—	—	—	—
19,000	1230	28.73	1250	29.38	1269	30.04	1289	30.70	—	—	—	—	—	—	—	—	—	—	—	—
20,000	1271	31.99	1290	32.67	—	—	—	—	—	—	—	—	—	—	—	—	—	—	—	—

50A2,A3,A6,A7060 (60 TONS)

Airflow (Cfm)	Available External Static Pressure (in. wg)																			
	0.2		0.4		0.6		0.8		1.0		1.2		1.4		1.6		1.8		2.0	
	rpm	bhp	rpm	bhp	rpm	bhp	rpm	bhp	rpm	bhp	rpm	bhp	rpm	bhp	rpm	bhp	rpm	bhp	rpm	bhp
12,000	450	4.02	509	4.71	560	5.41	605	6.12	647	6.86	686	7.62	723	8.40	757	9.21	790	10.04	821	10.89
14,000	505	5.74	558	6.49	606	7.24	649	8.01	689	8.79	727	9.59	762	10.40	795	11.24	827	12.09	857	12.96
15,000	533	6.75	584	7.53	630	8.32	672	9.11	711	9.91	748	10.73	782	11.56	815	12.41	846	13.28	876	14.17
16,000	561	7.88	610	8.68	655	9.50	696	10.32	734	11.14	770	11.98	803	12.84	836	13.71	866	14.59	896	15.49
17,000	590	9.12	637	9.95	680	10.79	720	11.64	757	12.49	792	13.35	825	14.23	857	15.12	887	16.02	916	16.94
18,000	619	10.48	664	11.33	706	12.20	744	13.07	781	13.96	815	14.84	847	15.74	878	16.65	908	17.57	937	18.50
19,000	648	11.96	692	12.84	732	13.74	769	14.64	805	15.54	838	16.45	870	17.37	900	18.30	930	19.24	958	20.19
20,000	678	13.57	719	14.47	758	15.40	795	16.32	829	17.25	862	18.19	893	19.13	923	20.08	952	21.04	979	22.01
21,000	707	15.30	748	16.24	785	17.19	821	18.14	854	19.09	886	20.05	917	21.02	946	22.00	974	22.98	1001	23.97
22,000	737	17.18	776	18.14	812	19.11	847	20.09	879	21.07	911	22.06	940	23.05	969	24.04	997	25.05	1024	26.06
23,000	767	19.20	804	20.18	840	21.17	873	22.17	905	23.18	935	24.19	965	25.21	993	26.23	1020	27.25	1046	28.28
24,000	797	21.35	833	22.36	867	23.38	900	24.40	931	25.43	961	26.47	989	27.51	1017	28.55	1044	29.60	1070	30.65
25,000	827	23.66	862	24.68	895	25.72	927	26.78	957	27.83	986	28.89	1014	29.95	1041	31.02	1068	32.09	1093	33.17
26,000	857	26.11	891	27.16	923	28.23	954	29.30	984	30.38	1012	31.46	1040	32.55	1066	33.64	1092	34.73	1117	35.83
27,000	888	28.72	920	29.79	952	30.88	982	31.97	1011	33.08	1038	34.19	1065	35.29	1091	36.40	1117	37.52	1141	38.64

50A2,A3,A6,A7060 (60 TONS) (cont)

Airflow (Cfm)	Available External Static Pressure (in. wg)																			
	2.2		2.4		2.6		2.8		3.0		3.2		3.4		3.6		3.8		4.0	
	rpm	bhp	rpm	bhp	rpm	bhp	rpm	bhp	rpm	bhp	rpm	bhp	rpm	bhp	rpm	bhp	rpm	bhp	rpm	bhp
12,000	851	11.75	880	12.63	907	13.53	934	14.45	960	15.38	985	16.32	1010	17.28	1033	18.24	1057	19.22	1079	20.22
14,000	886	13.85	915	14.76	942	15.68	968	16.62	993	17.57	1018	18.54	1042	19.52	1066	20.51	1088	21.52	1111	22.53
15,000	905	15.07	933	15.99	960	16.92	986	17.87	1011	18.83	1035	19.81	1059	20.81	1082	21.81	1105	22.82	1127	23.85
16,000	924	16.41	952	17.34	978	18.28	1004	19.25	1029	20.22	1053	21.21	1077	22.21	1100	23.22	1122	24.25	1144	25.29
17,000	944	17.86	971	18.81	997	19.77	1023	20.74	1047	21.73	1071	22.73	1095	23.74	1117	24.76	1140	25.80	1161	26.85
18,000	964	19.45	991	20.41	1017	21.38	1042	22.36	1066	23.36	1090	24.37	1113	25.40	1136	26.43	1158	27.48	1179	28.54
19,000	985	21.15	1011	22.13	1037	23.12	1061	24.11	1085	25.13	1109	26.15	1132	27.19	1154	28.24	1176	29.29	1197	30.36
20,000	1006	22.99	1032	23.98	1057	24.99	1081	26.00	1105	27.03	1128	28.06	1151	29.11	1173	30.17	1195	31.24	—	—
21,000	1028	24.97	1053	25.97	1078	26.99	1102	28.02	1126	29.06	1148	30.11	1171	31.17	1193	32.25	—	—	—	—
22,000	1050	27.08	1075	28.10	1099	29.14	1123	30.18	1146	31.24	1169	32.30	1191	33.38	—	—	—	—	—	—
23,000	1072	29.32	1097	30.37	1121	31.42	1144	32.48	1167	33.55	1190	34.64	—	—	—	—	—	—	—	—
24,000	1095	31.71	1119	32.78	1143	33.85	1166	34.93	1189	36.02	—	—	—	—	—	—	—	—	—	—
25,000	1118	34.25	1142	35.33	1165	36.42	1188	37.52	—	—	—	—	—	—	—	—	—	—	—	—
26,000	1141	36.93	1165	38.04	1188	39.15	—	—	—	—	—	—	—	—	—	—	—	—	—	—
27,000	1165	39.76	1188	40.89	—	—	—	—	—	—	—	—	—	—	—	—	—	—	—	—

LEGEND

Bhp — Brake Horsepower

NOTES:

1. Fan performance is based on wet coils, economizer, roof curb, cabinet losses, and clean 2-in. filters.
2. Conversion — Bhp to watts:

$$\text{Watts} = \frac{\text{Bhp x 746}}{\text{Motor efficiency}}$$

3. VAV units with variable capacity compressor can operate down to 100 cfm/ton. VAV units with standard scroll compressor or Humidi-MiZer are limited to 200 cfm/ton. Operation may be additionally limited by entering coil conditions.

Performance data (cont)

Fan Performance — Horizontal Discharge Units

48A4,A5,A8,A9 020 (20 TONS)

Airflow (Cfm)	Available External Static Pressure (in. wg)																			
	0.2		0.4		0.6		0.8		1.0		1.2		1.4		1.6		1.8		2.0	
	rpm	bhp	rpm	bhp	rpm	bhp	rpm	bhp	rpm	bhp	rpm	bhp	rpm	bhp	rpm	bhp	rpm	bhp	rpm	bhp
4,000	339	0.71	414	0.97	478	1.25	534	1.54	585	1.84	631	2.14	674	2.44	714	2.75	751	3.06	787	3.37
5,000	384	1.10	452	1.37	510	1.66	563	1.96	611	2.28	656	2.60	698	2.93	738	3.27	775	3.60	811	3.94
6,000	433	1.61	494	1.89	548	2.19	597	2.51	643	2.84	686	3.18	726	3.52	764	3.88	800	4.23	835	4.60
7,000	484	2.27	540	2.56	590	2.87	636	3.19	679	3.53	719	3.88	757	4.24	794	4.61	829	4.98	863	5.36
7,500	511	2.66	563	2.95	612	3.26	656	3.59	698	3.94	737	4.29	775	4.66	810	5.03	845	5.41	877	5.79
8,000	538	3.09	588	3.38	634	3.70	678	4.03	718	4.38	756	4.74	793	5.11	827	5.49	861	5.87	893	6.26
9,000	593	4.07	639	4.37	682	4.69	722	5.03	760	5.39	796	5.76	831	6.13	864	6.52	896	6.91	927	7.32
10,000	649	5.23	691	5.54	731	5.87	769	6.21	805	6.58	839	6.95	872	7.34	904	7.73	934	8.13	964	8.54

48A4,A5,A8,A9 020 (20 TONS) (cont)

Airflow (Cfm)	Available External Static Pressure (in. wg)																			
	2.2		2.4		2.6		2.8		3.0		3.2		3.4		3.6		3.8		4.0	
	rpm	bhp	rpm	bhp	rpm	bhp	rpm	bhp	rpm	bhp	rpm	bhp	rpm	bhp	rpm	bhp	rpm	bhp	rpm	bhp
4,000	820	3.68	852	3.99	883	4.30	912	4.62	940	4.93	967	5.25	993	5.57	1019	5.89	1043	6.21	1067	6.53
5,000	844	4.28	877	4.63	907	4.97	937	5.31	966	5.66	993	6.01	1020	6.35	1046	6.70	1071	7.05	1095	7.40
6,000	869	4.96	901	5.33	931	5.70	961	6.07	990	6.44	1017	6.81	1044	7.19	1070	7.57	1096	7.94	1121	8.32
7,000	895	5.74	926	6.13	956	6.52	986	6.91	1014	7.30	1042	7.70	1068	8.10	1094	8.50	1120	8.90	1145	9.30
7,500	909	6.18	940	6.57	970	6.97	999	7.37	1027	7.78	1054	8.18	1081	8.59	1107	9.00	1132	9.41	1157	9.82
8,000	925	6.66	955	7.06	984	7.46	1013	7.87	1040	8.28	1067	8.69	1094	9.11	1119	9.53	1144	9.95	1169	10.37
9,000	957	7.72	986	8.13	1015	8.55	1042	8.97	1069	9.39	1096	9.82	1121	10.25	1146	10.69	1171	11.12	1195	11.56
10,000	993	8.96	1021	9.38	1048	9.80	1075	10.23	1101	10.67	1126	11.11	1151	11.55	1176	12.00	1200	12.45	—	—

48A4,A5,A8,A9 025-030 (25 THRU 30 TONS)

Airflow (Cfm)	Available External Static Pressure (in. wg)																			
	0.2		0.4		0.6		0.8		1.0		1.2		1.4		1.6		1.8		2.0	
	rpm	bhp	rpm	bhp	rpm	bhp	rpm	bhp	rpm	bhp	rpm	bhp	rpm	bhp	rpm	bhp	rpm	bhp	rpm	bhp
5,000	389	1.11	456	1.38	514	1.68	566	1.98	614	2.30	659	2.62	701	2.95	740	3.29	777	3.62	813	3.96
6,000	439	1.64	499	1.92	553	2.22	602	2.54	647	2.87	689	3.21	730	3.56	768	3.91	804	4.27	838	4.63
7,000	492	2.31	546	2.60	596	2.91	641	3.24	684	3.58	724	3.93	762	4.29	798	4.66	833	5.03	867	5.41
8,000	546	3.14	596	3.43	642	3.75	684	4.09	724	4.44	762	4.80	798	5.17	833	5.55	866	5.93	898	6.32
9,000	602	4.13	647	4.43	690	4.76	730	5.10	768	5.46	803	5.83	838	6.21	871	6.60	903	7.00	933	7.40
10,000	659	5.31	701	5.62	740	5.95	777	6.30	813	6.67	847	7.04	880	7.43	911	7.83	942	8.23	971	8.64
11,000	717	6.67	755	6.99	792	7.33	827	7.68	860	8.06	893	8.44	924	8.83	954	9.24	983	9.65	1011	10.07
12,000	775	8.23	811	8.56	845	8.90	878	9.27	909	9.64	940	10.03	970	10.43	999	10.84	1026	11.26	1054	11.69
13,000	834	9.99	867	10.33	899	10.68	930	11.05	960	11.44	989	11.83	1017	12.24	1045	12.65	1072	13.08	1098	13.51
14,000	893	11.97	924	12.32	954	12.68	983	13.06	1012	13.44	1039	13.85	1066	14.26	1093	14.68	1118	15.11	1143	15.54
15,000	953	14.17	982	14.53	1010	14.90	1037	15.28	1064	15.68	1091	16.08	1116	16.50	1142	16.93	1166	17.36	1190	17.80

48A4,A5,A8,A9 025-030 (25 THRU 30 TONS) (cont)

Airflow (Cfm)	Available External Static Pressure (in. wg)																			
	2.2		2.4		2.6		2.8		3.0		3.2		3.4		3.6		3.8		4.0	
	rpm	bhp	rpm	bhp	rpm	bhp	rpm	bhp	rpm	bhp	rpm	bhp	rpm	bhp	rpm	bhp	rpm	bhp	rpm	bhp
5,000	846	4.31	879	4.65	909	4.99	939	5.34	968	5.68	995	6.03	1022	6.38	1048	6.73	1073	7.08	1097	7.43
6,000	872	5.00	903	5.36	934	5.73	964	6.10	992	6.48	1020	6.85	1047	7.22	1073	7.60	1098	7.98	1123	8.36
7,000	899	5.79	930	6.18	960	6.57	989	6.96	1018	7.36	1045	7.75	1072	8.15	1098	8.55	1123	8.95	1148	9.35
8,000	930	6.72	960	7.12	989	7.53	1017	7.94	1045	8.35	1072	8.76	1098	9.18	1124	9.60	1148	10.02	1173	10.44
9,000	963	7.80	992	8.22	1020	8.63	1048	9.06	1075	9.48	1101	9.91	1126	10.34	1151	10.78	1176	11.21	1200	11.65
10,000	1000	9.06	1028	9.48	1055	9.91	1081	10.34	1107	10.77	1133	11.22	1157	11.66	1182	12.11	—	—	—	—
11,000	1039	10.49	1066	10.92	1092	11.36	1117	11.80	1142	12.24	1167	12.69	1191	13.15	—	—	—	—	—	—
12,000	1080	12.12	1106	12.56	1131	13.00	1156	13.45	1180	13.90	—	—	—	—	—	—	—	—	—	—
13,000	1123	13.95	1148	14.39	1172	14.84	1196	15.30	—	—	—	—	—	—	—	—	—	—	—	—
14,000	1168	15.99	1192	16.44	—	—	—	—	—	—	—	—	—	—	—	—	—	—	—	—
15,000	—	—	—	—	—	—	—	—	—	—	—	—	—	—	—	—	—	—	—	—

LEGEND

Bhp — Brake Horsepower

NOTES:

1. Fan performance is based on wet coils, economizer, roof curb, cabinet losses, and clean 2-in. filters.
2. Conversion — Bhp to watts:

$$\text{Watts} = \frac{\text{Bhp x 746}}{\text{Motor efficiency}}$$

3. VAV units with variable capacity compressor can operate down to 100 cfm/ton. VAV units with standard scroll compressor or Humidi-MiZer are limited to 200 cfm/ton. Operation may be additionally limited by entering coil conditions.

Fan Performance — Horizontal Discharge Units (cont)

48A4,A5,A8,A9 035 (35 TONS)

AIRFLOW (Cfm)	AVAILABLE EXTERNAL STATIC PRESSURE (in. wg)																			
	0.2		0.4		0.6		0.8		1.0		1.2		1.4		1.6		1.8		2.0	
	rpm	bhp	rpm	bhp	rpm	bhp	rpm	bhp	rpm	bhp	rpm	bhp	rpm	bhp	rpm	bhp	rpm	bhp	rpm	bhp
7,000	553	2.59	602	2.92	648	3.26	691	3.61	732	3.95	770	4.29	807	4.63	842	4.96	875	5.29	907	5.62
8,000	612	3.45	656	3.81	698	4.17	738	4.53	776	4.90	812	5.27	847	5.63	881	6.00	913	6.36	944	6.72
9,000	672	4.47	712	4.86	750	5.24	787	5.62	823	6.01	857	6.39	890	6.78	922	7.17	953	7.56	983	7.95
10,000	733	5.67	769	6.08	805	6.48	839	6.88	872	7.28	904	7.69	935	8.10	966	8.51	995	8.92	1024	9.33
10,500	763	6.33	798	6.75	832	7.17	865	7.58	897	7.99	929	8.40	959	8.82	989	9.24	1017	9.66	1046	10.08
11,000	794	7.04	828	7.47	861	7.90	892	8.32	923	8.74	954	9.16	983	9.59	1012	10.01	1040	10.44	1067	10.87
12,000	855	8.60	887	9.06	918	9.51	948	9.95	977	10.39	1005	10.83	1033	11.27	1060	11.71	1087	12.16	1113	12.60
13,000	917	10.36	947	10.84	976	11.31	1004	11.77	1031	12.23	1058	12.69	1084	13.14	1110	13.60	1135	14.06	1160	14.52
14,000	980	12.32	1008	12.82	1035	13.31	1061	13.79	1087	14.27	1112	14.75	1137	15.22	1161	15.70	1185	16.17	1209	16.65
15,000	1042	14.49	1069	15.01	1094	15.52	1119	16.03	1143	16.53	1167	17.02	1191	17.51	1214	18.01	1237	18.50	1260	18.99
16,000	1105	16.88	1130	17.42	1154	17.96	1178	18.48	1201	19.00	1224	19.51	1246	20.02	1268	20.53	1290	21.04	—	—
17,000	1168	19.49	1191	20.06	1214	20.61	1237	21.16	1259	21.69	1281	22.23	—	—	—	—	—	—	—	—
17,500	1200	20.88	1222	21.46	1245	22.03	1267	22.58	1288	23.13	—	—	—	—	—	—	—	—	—	—

48A4,A5,A8,A9 035 (35 TONS) (cont)

AIRFLOW (Cfm)	AVAILABLE EXTERNAL STATIC PRESSURE (in. wg)																			
	2.2		2.4		2.6		2.8		3.0		3.2		3.4		3.6		3.8		4.0	
	rpm	bhp	rpm	bhp	rpm	bhp	rpm	bhp	rpm	bhp	rpm	bhp	rpm	bhp	rpm	bhp	rpm	bhp	rpm	bhp
7,000	937	5.94	967	6.26	995	6.57	1022	6.87	1048	7.18	1073	7.48	1098	7.78	1122	8.07	1145	8.36	1168	8.66
8,000	974	7.08	1003	7.43	1031	7.77	1058	8.12	1084	8.46	1109	8.79	1134	9.13	1158	9.46	1181	9.78	1204	10.11
9,000	1012	8.33	1041	8.72	1068	9.10	1094	9.47	1120	9.85	1145	10.22	1169	10.58	1193	10.95	1216	11.31	1239	11.66
10,000	1052	9.74	1080	10.15	1106	10.55	1132	10.96	1157	11.36	1182	11.76	1206	12.16	1229	12.55	1252	12.95	1275	13.34
10,500	1073	10.50	1100	10.92	1126	11.34	1151	11.75	1176	12.17	1201	12.59	1224	13.00	1248	13.41	1271	13.82	1293	14.22
11,000	1094	11.30	1120	11.73	1146	12.16	1171	12.59	1196	13.02	1220	13.45	1243	13.87	1266	14.30	1289	14.72	—	—
12,000	1138	13.05	1163	13.50	1188	13.95	1212	14.40	1236	14.84	1259	15.30	1282	15.74	—	—	—	—	—	—
13,000	1184	14.99	1208	15.45	1232	15.92	1255	16.39	1278	16.85	—	—	—	—	—	—	—	—	—	—
14,000	1232	17.13	1255	17.61	1278	18.09	—	—	—	—	—	—	—	—	—	—	—	—	—	—
15,000	1282	19.48	—	—	—	—	—	—	—	—	—	—	—	—	—	—	—	—	—	—
16,000	—	—	—	—	—	—	—	—	—	—	—	—	—	—	—	—	—	—	—	—
17,000	—	—	—	—	—	—	—	—	—	—	—	—	—	—	—	—	—	—	—	—
17,500	—	—	—	—	—	—	—	—	—	—	—	—	—	—	—	—	—	—	—	—

48A4,A5,A8,A9 040 (40 TONS)

Airflow (Cfm)	Available External Static Pressure (in. wg)																			
	0.2		0.4		0.6		0.8		1.0		1.2		1.4		1.6		1.8		2.0	
	rpm	bhp	rpm	bhp	rpm	bhp	rpm	bhp	rpm	bhp	rpm	bhp	rpm	bhp	rpm	bhp	rpm	bhp	rpm	bhp
8,000	526	3.10	573	3.50	617	3.91	660	4.33	700	4.75	740	5.18	778	5.62	814	6.07	850	6.53	884	7.00
9,000	579	4.08	621	4.51	662	4.95	701	5.39	738	5.83	775	6.28	810	6.74	845	7.21	878	7.69	911	8.17
10,000	633	5.24	671	5.70	709	6.16	744	6.62	779	7.09	813	7.57	846	8.05	879	8.53	910	9.03	941	9.53
11,000	687	6.59	723	7.07	757	7.56	790	8.05	823	8.54	854	9.04	885	9.54	916	10.05	945	10.56	974	11.08
12,000	742	8.15	775	8.65	807	9.17	838	9.68	868	10.20	898	10.72	927	11.24	955	11.77	983	12.30	1011	12.84
13,000	797	9.92	827	10.45	857	10.98	887	11.52	915	12.07	943	12.61	970	13.15	997	13.70	1024	14.25	1050	14.81
14,000	852	11.92	881	12.47	909	13.03	936	13.59	963	14.15	990	14.72	1016	15.29	1041	15.86	1066	16.43	1091	17.01
15,000	908	14.15	935	14.72	961	15.31	987	15.89	1013	16.48	1038	17.06	1062	17.65	1086	18.25	1110	18.84	1134	19.44
16,000	964	16.63	989	17.23	1014	17.83	1039	18.43	1063	19.04	1086	19.65	1110	20.26	1133	20.88	1156	21.49	1178	22.11
17,000	1021	19.37	1044	19.98	1068	20.60	1091	21.23	1114	21.86	1136	22.49	1158	23.12	1180	23.76	1202	24.39	1223	25.03
18,000	1077	22.37	1099	23.01	1122	23.64	1144	24.29	1165	24.94	1187	25.59	1208	26.25	1229	26.90	1250	27.56	1270	28.22
19,000	1133	25.65	1155	26.30	1176	26.96	1197	27.62	1217	28.29	1238	28.96	—	—	—	—	—	—	—	—
20,000	1190	29.21	—	—	—	—	—	—	—	—	—	—	—	—	—	—	—	—	—	—

48A4,A5,A8,A9 040 (40 TONS) (cont)

Airflow (Cfm)	Available External Static Pressure (in. wg)																			
	2.2		2.4		2.6		2.8		3.0		3.2		3.4		3.6		3.8		4.0	
	rpm	bhp	rpm	bhp	rpm	bhp	rpm	bhp	rpm	bhp	rpm	bhp	rpm	bhp	rpm	bhp	rpm	bhp	rpm	bhp
8,000	917	7.48	949	7.96	980	8.44	1010	8.94	1039	9.43	1067	9.93	1094	10.44	1121	10.95	1147	11.46	1172	11.98
9,000	942	8.66	973	9.16	1003	9.66	1033	10.17	1061	10.69	1089	11.21	1116	11.73	1142	12.26	1168	12.80	1193	13.33
10,000	971	10.03	1001	10.55	1030	11.06	1058	11.59	1086	12.12	1113	12.66	1139	13.20	1165	13.75	1190	14.30	1215	14.86
11,000	1003	11.60	1031	12.13	1059	12.67	1086	13.21	1112	13.75	1139	14.31	1164	14.86	1189	15.43	1214	15.99	1238	16.56
12,000	1038	13.38	1065	13.92	1091	14.47	1117	15.03	1142	15.59	1167	16.16	1192	16.73	1216	17.31	1240	17.89	1264	18.48
13,000	1075	15.37	1101	15.93	1126	16.50	1150	17.07	1175	17.65	1199	18.23	1222	18.82	1246	19.41	1269	20.00	1291	20.61
14,000	1115	17.59	1139	18.17	1163	18.75	1186	19.34	1210	19.94	1232	20.53	1255	21.14	1277	21.74	1300	22.35	—	—
15,000	1157	20.04	1180	20.64	1202	21.24	1225	21.85	1247	22.46	1269	23.07	1290	23.69	—	—	—	—	—	—
16,000	1200	22.73	1222	23.35	1243	23.97	1265	24.60	1286	25.23	—	—	—	—	—	—	—	—	—	—
17,000	1245	25.67	1266	26.32	1286	26.96	—	—	—	—	—	—	—	—	—	—	—	—	—	—
18,000	1290	28.88	—	—	—	—	—	—	—	—	—	—	—	—	—	—	—	—	—	—
19,000	—	—	—	—	—	—	—	—	—	—	—	—	—	—	—	—	—	—	—	—
20,000	—	—	—	—	—	—	—	—	—	—	—	—	—	—	—	—	—	—	—	—

LEGEND

Bhp — Brake Horsepower

NOTES:

1. Fan performance is based on wet coils, economizer, roof curb, cabinet losses, and clean 2-in. filters.
2. Conversion — Bhp to watts:

$$\text{Watts} = \frac{\text{Bhp} \times 746}{\text{Motor efficiency}}$$

3. VAV units with variable capacity compressor can operate down to 100 cfm/ton. VAV units with standard scroll compressor or Humidi-MiZer are limited to 200 cfm/ton. Operation may be additionally limited by entering coil conditions.

Fan Performance — Horizontal Discharge Units (cont)

48A4,A5,A8,A9 050 (50 TONS)

Airflow (Cfm)	Available External Static Pressure (in. wg)																			
	0.2		0.4		0.6		0.8		1.0		1.2		1.4		1.6		1.8		2.0	
	rpm	bhp	rpm	bhp	rpm	bhp	rpm	bhp	rpm	bhp	rpm	bhp	rpm	bhp	rpm	bhp	rpm	bhp	rpm	bhp
10,000	642	5.35	680	5.80	717	6.27	753	6.73	787	7.20	821	7.68	854	8.16	886	8.65	917	9.14	948	9.65
11,000	696	6.72	732	7.20	766	7.69	799	8.18	831	8.67	863	9.17	893	9.68	923	10.18	953	10.70	982	11.21
12,000	751	8.29	784	8.80	816	9.32	847	9.83	877	10.35	906	10.87	935	11.40	964	11.92	991	12.46	1019	12.99
13,000	807	10.09	837	10.62	867	11.16	896	11.70	924	12.24	952	12.78	979	13.33	1006	13.88	1032	14.43	1058	14.99
14,000	863	12.12	891	12.67	919	13.23	946	13.79	973	14.36	999	14.92	1025	15.49	1050	16.06	1075	16.64	1100	17.21
15,000	919	14.38	946	14.96	972	15.54	997	16.12	1023	16.71	1047	17.30	1072	17.89	1096	18.48	1120	19.08	1143	19.68
16,000	975	16.90	1000	17.49	1025	18.09	1049	18.70	1073	19.31	1097	19.92	1120	20.53	1143	21.15	1165	21.76	1188	22.38
17,000	1032	19.67	1056	20.29	1079	20.91	1102	21.54	1125	22.17	1147	22.80	1169	23.44	1191	24.07	1213	24.71	1234	25.35
18,000	1089	22.71	1111	23.35	1134	23.99	1155	24.64	1177	25.29	1198	25.95	1219	26.60	1240	27.26	1261	27.92	1281	28.58
19,000	1146	26.04	1167	26.69	1188	27.35	1209	28.02	1230	28.69	1250	29.37	1270	30.04	1290	30.72	—	—	—	—
20,000	1203	29.65	1224	30.32	1244	31.00	1263	31.69	1283	32.38	—	—	—	—	—	—	—	—	—	—

48A4,A5,A8,A9 050 (50 TONS) (cont)

Airflow (Cfm)	Available External Static Pressure (in. wg)																			
	2.2		2.4		2.6		2.8		3.0		3.2		3.4		3.6		3.8		4.0	
	rpm	bhp	rpm	bhp	rpm	bhp	rpm	bhp	rpm	bhp	rpm	bhp	rpm	bhp	rpm	bhp	rpm	bhp	rpm	bhp
10,000	978	10.15	1008	10.67	1036	11.19	1064	11.72	1092	12.25	1119	12.79	1145	13.33	1171	13.88	1196	14.43	1221	14.99
11,000	1010	11.74	1038	12.27	1066	12.81	1093	13.35	1119	13.90	1145	14.45	1171	15.01	1196	15.57	1220	16.14	1245	16.72
12,000	1046	13.53	1072	14.08	1098	14.63	1124	15.19	1149	15.76	1174	16.32	1199	16.90	1223	17.48	1247	18.06	1270	18.65
13,000	1084	15.55	1109	16.11	1134	16.68	1158	17.26	1182	17.84	1206	18.42	1230	19.01	1253	19.60	1276	20.20	1299	20.80
14,000	1124	17.79	1148	18.38	1171	18.97	1195	19.55	1218	20.15	1241	20.75	1263	21.35	1285	21.96	—	—	—	—
15,000	1166	20.27	1189	20.88	1211	21.49	1234	22.09	1256	22.71	1277	23.32	1299	23.94	—	—	—	—	—	—
16,000	1210	23.00	1231	23.62	1253	24.25	1274	24.88	1295	25.51	—	—	—	—	—	—	—	—	—	—
17,000	1255	25.99	1276	26.63	1296	27.27	—	—	—	—	—	—	—	—	—	—	—	—	—	—
18,000	—	—	—	—	—	—	—	—	—	—	—	—	—	—	—	—	—	—	—	—
19,000	—	—	—	—	—	—	—	—	—	—	—	—	—	—	—	—	—	—	—	—
20,000	—	—	—	—	—	—	—	—	—	—	—	—	—	—	—	—	—	—	—	—

48A4,A5,A8,A9 060 (60 TONS)

Airflow (Cfm)	Available External Static Pressure (in. wg)																			
	0.2		0.4		0.6		0.8		1.0		1.2		1.4		1.6		1.8		2.0	
	rpm	bhp	rpm	bhp	rpm	bhp	rpm	bhp	rpm	bhp	rpm	bhp	rpm	bhp	rpm	bhp	rpm	bhp	rpm	bhp
12,000	516	4.81	569	5.54	617	6.30	660	7.10	701	7.93	739	8.79	774	9.68	808	10.59	841	11.52	872	12.46
14,000	584	6.90	632	7.69	676	8.50	716	9.33	754	10.20	790	11.10	824	12.02	857	12.97	888	13.94	917	14.92
15,000	619	8.13	664	8.96	706	9.79	745	10.65	782	11.53	817	12.44	850	13.38	882	14.35	912	15.33	941	16.34
16,000	654	9.49	697	10.36	737	11.22	775	12.10	811	13.00	845	13.93	877	14.88	908	15.86	938	16.86	966	17.88
17,000	689	10.99	730	11.90	769	12.79	806	13.69	840	14.61	873	15.56	904	16.53	935	17.52	964	18.54	992	19.58
18,000	725	12.64	764	13.58	801	14.51	837	15.43	870	16.38	902	17.34	933	18.32	962	19.33	990	20.36	1018	21.41
19,000	760	14.43	798	15.41	834	16.37	868	17.32	900	18.29	932	19.27	961	20.27	990	21.29	1018	22.34	1045	23.40
20,000	796	16.37	833	17.39	867	18.39	900	19.37	931	20.36	962	21.36	991	22.38	1019	23.42	1046	24.48	1072	25.56
21,000	832	18.47	867	19.54	901	20.56	932	21.57	963	22.59	992	23.61	1020	24.65	1048	25.71	1074	26.78	1100	27.87
22,000	869	20.74	902	21.84	934	22.90	965	23.94	995	24.98	1023	26.03	1051	27.09	1077	28.17	1103	29.26	1129	30.36
23,000	905	23.17	937	24.31	968	25.40	998	26.48	1027	27.55	1055	28.62	1081	29.70	1107	30.79	1133	31.90	1157	33.02
24,000	942	25.78	973	26.95	1003	28.08	1032	29.18	1059	30.28	1086	31.38	1113	32.48	1138	33.59	1163	34.72	1187	35.86
25,000	978	28.56	1008	29.77	1037	30.93	1065	32.07	1092	33.20	1119	34.32	1144	35.44	1169	36.58	1193	37.72	—	—
26,000	1015	31.52	1044	32.76	1072	33.96	1099	35.13	1125	36.29	1151	37.44	1176	38.59	—	—	—	—	—	—
27,000	1052	34.66	1080	35.94	1107	37.18	1133	38.38	1159	39.57	1184	40.75	—	—	—	—	—	—	—	—

48A4,A5,A8,A9 060 (60 TONS) (cont)

Airflow (Cfm)	Available External Static Pressure (in. wg)																			
	2.2		2.4		2.6		2.8		3.0		3.2		3.4		3.6		3.8		4.0	
	rpm	bhp	rpm	bhp	rpm	bhp	rpm	bhp	rpm	bhp	rpm	bhp	rpm	bhp	rpm	bhp	rpm	bhp	rpm	bhp
12,000	901	13.42	930	14.38	958	15.36	985	16.34	1011	17.33	1036	18.33	1061	19.33	1085	20.34	1108	21.35	1131	22.36
14,000	946	15.92	974	16.94	1001	17.97	1027	19.01	1052	20.06	1077	21.12	1101	22.18	1125	23.25	1148	24.33	1170	25.42
15,000	970	17.36	997	18.40	1024	19.45	1049	20.51	1074	21.58	1099	22.67	1122	23.76	1146	24.86	1168	25.97	1191	27.08
16,000	994	18.93	1021	19.98	1047	21.05	1072	22.14	1097	23.23	1121	24.34	1144	25.45	1167	26.58	1190	27.71	—	—
17,000	1019	20.63	1045	21.70	1071	22.79	1096	23.89	1120	25.01	1144	26.13	1167	27.27	1190	28.42	—	—	—	—
18,000	1045	22.48	1070	23.57	1096	24.67	1120	25.79	1144	26.93	1167	28.07	1190	29.23	—	—	—	—	—	—
19,000	1071	24.49	1096	25.59	1121	26.71	1145	27.84	1169	28.99	1192	30.16	—	—	—	—	—	—	—	—
20,000	1098	26.66	1123	27.77	1147	28.90	1171	30.05	1194	31.21	—	—	—	—	—	—	—	—	—	—
21,000	1125	28.99	1150	30.12	1173	31.26	1197	32.42	—	—	—	—	—	—	—	—	—	—	—	—
22,000	1153	31.49	1177	32.63	—	—	—	—	—	—	—	—	—	—	—	—	—	—	—	—
23,000	1181	34.16	—	—	—	—	—	—	—	—	—	—	—	—	—	—	—	—	—	—
24,000	—	—	—	—	—	—	—	—	—	—	—	—	—	—	—	—	—	—	—	—
25,000	—	—	—	—	—	—	—	—	—	—	—	—	—	—	—	—	—	—	—	—
26,000	—	—	—	—	—	—	—	—	—	—	—	—	—	—	—	—	—	—	—	—
27,000	—	—	—	—	—	—	—	—	—	—	—	—	—	—	—	—	—	—	—	—

LEGEND

Bhp — Brake Horsepower

NOTES:

1. Fan performance is based on wet coils, economizer, roof curb, cabinet losses, and clean 2-in. filters.
2. Conversion — Bhp to watts:

$$\text{Watts} = \frac{\text{Bhp x 746}}{\text{Motor efficiency}}$$

3. VAV units with variable capacity compressor can operate down to 100 cfm/ton. VAV units with standard scroll compressor or Humidi-MiZer are limited to 200 cfm/ton. Operation may be additionally limited by entering coil conditions.

Fan Performance — Horizontal Discharge Units (cont)

50A4,A5,A8,A9 020 (20 TONS)

Airflow (Cfm)	Available External Static Pressure (in. wg)																			
	0.2		0.4		0.6		0.8		1.0		1.2		1.4		1.6		1.8		2.0	
	rpm	bhp	rpm	bhp	rpm	bhp	rpm	bhp	rpm	bhp	rpm	bhp	rpm	bhp	rpm	bhp	rpm	bhp	rpm	bhp
4,000	322	0.62	399	0.82	464	1.04	521	1.26	572	1.48	619	1.71	662	1.93	702	2.16	739	2.38	774	2.61
5,000	361	0.95	431	1.17	491	1.41	545	1.65	594	1.89	640	2.14	682	2.39	722	2.64	759	2.89	795	3.14
6,000	405	1.41	467	1.64	524	1.88	574	2.14	621	2.40	664	2.67	705	2.93	744	3.20	780	3.47	816	3.75
7,000	451	2.00	508	2.22	559	2.48	607	2.75	651	3.02	693	3.30	732	3.58	769	3.87	804	4.16	839	4.45
7,500	475	2.34	529	2.57	579	2.82	625	3.10	668	3.38	708	3.66	746	3.96	783	4.25	818	4.55	851	4.84
8,000	500	2.72	551	2.95	598	3.21	643	3.48	685	3.77	724	4.06	762	4.36	797	4.66	832	4.96	864	5.27
9,000	550	3.60	596	3.83	640	4.09	682	4.36	721	4.66	759	4.96	795	5.27	829	5.58	862	5.90	893	6.22
10,000	601	4.63	644	4.86	684	5.12	723	5.40	760	5.70	796	6.01	830	6.33	863	6.65	894	6.98	925	7.31

50A4,A5,A8,A9 020 (20 TONS) (cont)

Airflow (Cfm)	Available External Static Pressure (in. wg)																			
	2.2		2.4		2.6		2.8		3.0		3.2		3.4		3.6		3.8		4.0	
	rpm	bhp	rpm	bhp	rpm	bhp	rpm	bhp	rpm	bhp	rpm	bhp	rpm	bhp	rpm	bhp	rpm	bhp	rpm	bhp
4,000	808	2.84	840	3.06	870	3.29	900	3.52	928	3.75	955	3.98	981	4.21	1007	4.44	1031	4.67	1055	4.91
5,000	829	3.39	861	3.64	892	3.89	922	4.14	950	4.40	978	4.65	1005	4.90	1031	5.16	1056	5.41	1080	5.67
6,000	849	4.02	881	4.29	912	4.57	942	4.84	971	5.12	999	5.39	1026	5.67	1052	5.94	1077	6.22	1102	6.49
7,000	871	4.74	903	5.03	933	5.33	963	5.62	991	5.92	1019	6.21	1046	6.51	1072	6.80	1098	7.10	1123	7.40
7,500	883	5.14	915	5.44	945	5.75	974	6.05	1002	6.35	1030	6.66	1057	6.96	1083	7.27	1108	7.58	1133	7.88
8,000	896	5.58	927	5.89	957	6.20	985	6.51	1014	6.82	1041	7.13	1067	7.45	1093	7.76	1118	8.08	1143	8.39
9,000	924	6.54	954	6.86	983	7.19	1011	7.51	1038	7.84	1064	8.17	1090	8.50	1116	8.83	1141	9.16	1165	9.49
10,000	954	7.64	983	7.98	1011	8.31	1038	8.65	1065	8.99	1091	9.34	1116	9.68	1141	10.02	1165	10.37	1189	10.72

50A4,A5,A8,A9 025-030 (25 THRU 30 TONS)

Airflow (Cfm)	Available External Static Pressure (in. wg)																			
	0.2		0.4		0.6		0.8		1.0		1.2		1.4		1.6		1.8		2.0	
	rpm	bhp	rpm	bhp	rpm	bhp	rpm	bhp	rpm	bhp	rpm	bhp	rpm	bhp	rpm	bhp	rpm	bhp	rpm	bhp
5,000	366	0.97	435	1.19	495	1.42	548	1.67	597	1.91	642	2.16	685	2.41	724	2.65	762	2.90	797	3.16
6,000	411	1.43	473	1.66	529	1.91	579	2.16	625	2.43	668	2.69	709	2.96	747	3.23	784	3.50	819	3.77
7,000	459	2.02	515	2.25	566	2.51	613	2.78	657	3.06	698	3.34	737	3.62	774	3.91	809	4.20	843	4.49
8,000	508	2.76	559	2.99	606	3.25	650	3.53	691	3.82	731	4.11	768	4.41	803	4.71	837	5.01	870	5.32
9,000	560	3.64	605	3.88	649	4.14	690	4.42	729	4.72	766	5.02	802	5.33	835	5.64	868	5.96	900	6.28
10,000	612	4.68	654	4.92	694	5.19	732	5.47	769	5.77	804	6.09	838	6.40	870	6.73	902	7.06	932	7.39
11,000	665	5.89	703	6.14	740	6.41	776	6.69	811	7.00	844	7.31	876	7.64	907	7.97	937	8.31	967	8.65
12,000	718	7.28	754	7.53	788	7.80	822	8.09	854	8.39	886	8.71	916	9.04	946	9.38	975	9.72	1003	10.07
13,000	772	8.85	806	9.11	838	9.38	869	9.67	899	9.98	929	10.30	958	10.63	987	10.97	1014	11.32	1041	11.68
14,000	826	10.61	858	10.87	888	11.15	917	11.44	946	11.75	974	12.07	1002	12.41	1029	12.75	1055	13.10	1081	13.46
15,000	881	12.57	910	12.84	939	13.12	967	13.41	994	13.72	1021	14.05	1047	14.38	1073	14.73	1098	15.08	1123	15.45

50A4,A5,A8,A9 025-030 (25 THRU 30 TONS) (cont)

Airflow (Cfm)	Available External Static Pressure (in. wg)																			
	2.2		2.4		2.6		2.8		3.0		3.2		3.4		3.6		3.8		4.0	
	rpm	bhp	rpm	bhp	rpm	bhp	rpm	bhp	rpm	bhp	rpm	bhp	rpm	bhp	rpm	bhp	rpm	bhp	rpm	bhp
5,000	831	3.41	863	3.66	894	3.91	924	4.16	952	4.41	980	4.67	1007	4.92	1032	5.17	1057	5.43	1082	5.68
6,000	852	4.05	884	4.32	915	4.59	945	4.87	974	5.14	1001	5.42	1028	5.69	1054	5.97	1080	6.24	1105	6.52
7,000	875	4.78	907	5.07	937	5.37	967	5.66	995	5.95	1023	6.25	1049	6.55	1076	6.84	1101	7.14	1126	7.44
8,000	901	5.63	932	5.94	961	6.25	990	6.56	1018	6.87	1045	7.18	1072	7.50	1097	7.81	1123	8.13	1147	8.44
9,000	930	6.60	960	6.93	988	7.25	1016	7.58	1043	7.91	1070	8.23	1096	8.57	1121	8.90	1146	9.23	1170	9.56
10,000	961	7.72	990	8.06	1018	8.40	1045	8.74	1071	9.08	1097	9.42	1122	9.76	1147	10.11	1171	10.46	1194	10.80
11,000	995	8.99	1022	9.34	1049	9.69	1075	10.04	1101	10.39	1126	10.75	1151	11.11	1175	11.47	1198	11.82	—	—
12,000	1030	10.43	1057	10.78	1083	11.14	1108	11.51	1133	11.87	1157	12.24	1181	12.61	—	—	—	—	—	—
13,000	1068	12.04	1093	12.40	1119	12.77	1143	13.14	1167	13.52	1191	13.89	—	—	—	—	—	—	—	—
14,000	1107	13.83	1131	14.20	1156	14.58	1179	14.96	—	—	—	—	—	—	—	—	—	—	—	—
15,000	1147	15.82	1171	16.19	1194	16.58	—	—	—	—	—	—	—	—	—	—	—	—	—	—

LEGEND

Bhp — Brake Horsepower

NOTES:

1. Fan performance is based on wet coils, economizer, roof curb, cabinet losses, and clean 2-in. filters.
2. Conversion — Bhp to watts:

$$\text{Watts} = \frac{\text{Bhp x 746}}{\text{Motor efficiency}}$$

3. VAV units with variable capacity compressor can operate down to 100 cfm/ton. VAV units with standard scroll compressor or Humidi-MiZer are limited to 200 cfm/ton. Operation may be additionally limited by entering coil conditions.

Fan Performance — Horizontal Discharge Units (cont)

50A4,A5,A8,A9 035 (35 TONS)

AIRFLOW (Cfm)	AVAILABLE EXTERNAL STATIC PRESSURE (in. wg)																			
	0.2		0.4		0.6		0.8		1.0		1.2		1.4		1.6		1.8		2.0	
	rpm	bhp	rpm	bhp	rpm	bhp	rpm	bhp	rpm	bhp	rpm	bhp	rpm	bhp	rpm	bhp	rpm	bhp	rpm	bhp
7,000	522	2.06	573	2.32	620	2.57	664	2.82	705	3.06	744	3.30	780	3.54	815	3.78	849	4.01	881	4.24
8,000	576	2.75	622	3.03	665	3.30	706	3.57	745	3.84	782	4.10	817	4.36	850	4.62	883	4.87	914	5.12
9,000	630	3.57	672	3.86	712	4.16	750	4.45	787	4.74	822	5.02	855	5.30	888	5.58	919	5.86	949	6.13
10,000	686	4.52	724	4.84	761	5.15	797	5.46	831	5.77	864	6.07	896	6.37	927	6.67	957	6.97	986	7.26
10,500	714	5.05	750	5.38	786	5.70	821	6.02	854	6.34	886	6.65	917	6.96	947	7.27	977	7.57	1005	7.87
11,000	742	5.62	777	5.95	811	6.28	845	6.61	877	6.94	909	7.26	939	7.58	968	7.90	997	8.21	1025	8.52
12,000	799	6.88	831	7.22	863	7.57	894	7.91	925	8.25	954	8.60	983	8.93	1011	9.27	1039	9.60	1065	9.93
13,000	856	8.29	886	8.65	916	9.01	945	9.37	974	9.72	1002	10.08	1029	10.44	1056	10.79	1082	11.14	1108	11.49
14,000	914	9.87	942	10.24	969	10.61	997	10.98	1024	11.36	1050	11.73	1076	12.10	1102	12.47	1127	12.84	1152	13.20
15,000	971	11.62	998	12.00	1024	12.39	1050	12.77	1075	13.16	1100	13.54	1125	13.93	1149	14.31	1173	14.70	1197	15.08
16,000	1029	13.55	1054	13.94	1079	14.34	1103	14.74	1127	15.13	1151	15.53	1174	15.93	1198	16.33	1220	16.73	1243	17.12
17,000	1088	15.66	1111	16.07	1134	16.47	1157	16.88	1180	17.29	1203	17.70	1225	18.11	1247	18.53	1269	18.93	1290	19.34
17,500	1117	16.79	1140	17.20	1162	17.61	1184	18.02	1207	18.44	1229	18.86	1250	19.27	1272	19.69	1293	20.11	—	—

50A4,A5,A8,A9 035 (35 TONS) (cont)

AIRFLOW (Cfm)	AVAILABLE EXTERNAL STATIC PRESSURE (in. wg)																			
	2.2		2.4		2.6		2.8		3.0		3.2		3.4		3.6		3.8		4.0	
	rpm	bhp	rpm	bhp	rpm	bhp	rpm	bhp	rpm	bhp	rpm	bhp	rpm	bhp	rpm	bhp	rpm	bhp	rpm	bhp
7,000	912	4.46	942	4.68	970	4.90	998	5.12	1025	5.33	1051	5.54	1076	5.75	1101	5.96	1124	6.16	1148	6.36
8,000	944	5.37	973	5.62	1001	5.86	1029	6.11	1055	6.35	1081	6.58	1106	6.82	1130	7.05	1154	7.28	1177	7.51
9,000	978	6.40	1006	6.67	1034	6.93	1060	7.20	1086	7.46	1112	7.72	1136	7.98	1160	8.23	1184	8.49	1207	8.74
10,000	1014	7.55	1041	7.84	1068	8.12	1094	8.41	1119	8.69	1144	8.97	1168	9.25	1192	9.52	1215	9.80	1238	10.07
10,500	1033	8.17	1059	8.47	1086	8.77	1111	9.06	1136	9.35	1161	9.64	1184	9.93	1208	10.22	1231	10.50	1253	10.79
11,000	1052	8.83	1078	9.14	1104	9.44	1129	9.75	1154	10.05	1178	10.35	1201	10.64	1224	10.94	1247	11.23	1269	11.53
12,000	1091	10.26	1117	10.58	1142	10.90	1166	11.23	1190	11.54	1213	11.86	1236	12.18	1259	12.49	1281	12.80	—	—
13,000	1133	11.83	1157	12.17	1181	12.51	1205	12.85	1228	13.19	1251	13.52	1273	13.86	1295	14.19	—	—	—	—
14,000	1176	13.56	1199	13.92	1222	14.28	1245	14.63	1268	14.99	1290	15.34	—	—	—	—	—	—	—	—
15,000	1220	15.45	1243	15.83	1265	16.20	1287	16.58	—	—	—	—	—	—	—	—	—	—	—	—
16,000	1265	17.52	1287	17.91	—	—	—	—	—	—	—	—	—	—	—	—	—	—	—	—
17,000	—	—	—	—	—	—	—	—	—	—	—	—	—	—	—	—	—	—	—	—
17,500	—	—	—	—	—	—	—	—	—	—	—	—	—	—	—	—	—	—	—	—

50A4,A5,A8,A9 040 (40 TONS)

Airflow (Cfm)	Available External Static Pressure (in. wg)																			
	0.2		0.4		0.6		0.8		1.0		1.2		1.4		1.6		1.8		2.0	
	rpm	bhp	rpm	bhp	rpm	bhp	rpm	bhp	rpm	bhp	rpm	bhp	rpm	bhp	rpm	bhp	rpm	bhp	rpm	bhp
8,000	499	2.88	546	3.27	590	3.66	632	4.06	672	4.46	711	4.87	748	5.28	784	5.70	819	6.14	853	6.58
9,000	548	3.78	591	4.20	631	4.62	670	5.04	708	5.47	744	5.90	778	6.33	812	6.77	845	7.22	877	7.67
10,000	599	4.86	637	5.30	675	5.74	711	6.19	746	6.64	779	7.09	812	7.55	844	8.01	875	8.47	905	8.94
11,000	649	6.11	685	6.57	720	7.04	753	7.51	786	7.99	817	8.47	848	8.94	878	9.43	907	9.91	936	10.40
12,000	701	7.54	734	8.03	766	8.52	797	9.02	828	9.52	857	10.02	886	10.52	915	11.03	943	11.53	970	12.04
13,000	753	9.18	783	9.69	813	10.21	842	10.72	871	11.25	899	11.77	927	12.30	953	12.82	980	13.35	1006	13.88
14,000	805	11.03	833	11.56	861	12.09	889	12.63	916	13.18	942	13.73	968	14.27	994	14.82	1019	15.37	1044	15.92
15,000	857	13.09	884	13.64	910	14.20	936	14.76	962	15.32	987	15.89	1011	16.46	1036	17.03	1060	17.61	1083	18.18
16,000	910	15.38	935	15.95	960	16.53	984	17.11	1008	17.69	1032	18.28	1056	18.87	1079	19.47	1101	20.06	1124	20.66
17,000	963	17.91	986	18.50	1010	19.09	1033	19.69	1056	20.30	1078	20.91	1101	21.52	1123	22.13	1145	22.75	1166	23.36
18,000	1016	20.68	1038	21.29	1060	21.90	1082	22.52	1104	23.15	1126	23.77	1147	24.41	1168	25.04	1189	25.67	1209	26.31
19,000	1069	23.71	1090	24.33	1111	24.96	1132	25.60	1153	26.25	1173	26.89	1194	27.54	1214	28.19	1234	28.85	—	—
20,000	1122	26.99	1142	27.64	1162	28.29	1182	28.95	—	—	—	—	—	—	—	—	—	—	—	—

50A4,A5,A8,A9 040 (40 TONS) (cont)

Airflow (Cfm)	Available External Static Pressure (in. wg)																			
	2.2		2.4		2.6		2.8		3.0		3.2		3.4		3.6		3.8		4.0	
	rpm	bhp	rpm	bhp	rpm	bhp	rpm	bhp	rpm	bhp	rpm	bhp	rpm	bhp	rpm	bhp	rpm	bhp	rpm	bhp
8,000	885	7.03	917	7.48	948	7.95	978	8.42	1007	8.90	1036	9.39	1063	9.88	1090	10.38	1116	10.88	1142	11.39
9,000	908	8.13	939	8.60	968	9.08	997	9.56	1026	10.05	1053	10.55	1080	11.05	1107	11.56	1133	12.08	1158	12.60
10,000	934	9.42	963	9.90	992	10.39	1020	10.89	1047	11.39	1073	11.89	1100	12.41	1125	12.93	1151	13.45	1175	13.99
11,000	964	10.89	992	11.39	1019	11.89	1045	12.40	1071	12.91	1097	13.43	1122	13.96	1147	14.49	1171	15.02	1195	15.56
12,000	996	12.55	1023	13.07	1048	13.59	1074	14.11	1099	14.64	1123	15.17	1147	15.71	1171	16.25	1195	16.80	1218	17.35
13,000	1031	14.41	1056	14.95	1081	15.48	1105	16.03	1129	16.57	1152	17.12	1175	17.67	1198	18.22	1221	18.78	1243	19.35
14,000	1068	16.48	1092	17.03	1115	17.59	1138	18.15	1161	18.71	1184	19.27	1206	19.84	1228	20.41	1250	20.99	1271	21.56
15,000	1106	18.75	1129	19.33	1151	19.91	1174	20.48	1196	21.07	1217	21.65	1239	22.23	1260	22.82	1280	23.41	—	—
16,000	1146	21.25	1168	21.85	1189	22.45	1211	23.04	1232	23.64	1253	24.25	1273	24.85	1293	25.45	—	—	—	—
17,000	1187	23.98	1208	24.60	1229	25.21	1249	25.83	1270	26.46	1289	27.07	—	—	—	—	—	—	—	—
18,000	1230	26.95	1250	27.58	1269	28.22	1289	28.86	—	—	—	—	—	—	—	—	—	—	—	—
19,000	—	—	—	—	—	—	—	—	—	—	—	—	—	—	—	—	—	—	—	—
20,000	—	—	—	—	—	—	—	—	—	—	—	—	—	—	—	—	—	—	—	—

LEGEND

Bhp — Brake Horsepower

NOTES:

1. Fan performance is based on wet coils, economizer, roof curb, cabinet losses, and clean 2-in. filters.
2. Conversion — Bhp to watts:

$$\text{Watts} = \frac{\text{Bhp x 746}}{\text{Motor efficiency}}$$

3. VAV units with variable capacity compressor can operate down to 100 cfm/ton. VAV units with standard scroll compressor or Humidi-MiZer are limited to 200 cfm/ton. Operation may be additionally limited by entering coil conditions.

Fan Performance — Horizontal Discharge Units (cont)

50A4,A5,A8,A9 050 (50 TONS)

Airflow (Cfm)	Available External Static Pressure (in. wg)																			
	0.2		0.4		0.6		0.8		1.0		1.2		1.4		1.6		1.8		2.0	
	rpm	bhp	rpm	bhp	rpm	bhp	rpm	bhp	rpm	bhp	rpm	bhp	rpm	bhp	rpm	bhp	rpm	bhp	rpm	bhp
10,000	608	4.96	646	5.40	683	5.85	719	6.30	754	6.75	787	7.20	819	7.66	851	8.12	882	8.58	912	9.06
11,000	659	6.23	694	6.69	728	7.16	762	7.64	794	8.11	825	8.59	856	9.07	886	9.55	915	10.04	943	10.53
12,000	710	7.68	743	8.17	775	8.67	806	9.17	836	9.67	866	10.17	895	10.67	923	11.17	950	11.68	978	12.19
13,000	763	9.35	793	9.86	823	10.37	852	10.89	880	11.42	908	11.94	935	12.47	962	12.99	988	13.52	1014	14.05
14,000	815	11.22	843	11.75	871	12.29	899	12.83	925	13.38	952	13.92	978	14.47	1003	15.02	1028	15.57	1052	16.12
15,000	868	13.31	895	13.86	921	14.42	946	14.98	972	15.55	997	16.12	1021	16.69	1045	17.26	1069	17.83	1092	18.41
16,000	921	15.64	946	16.21	971	16.78	995	17.37	1019	17.96	1043	18.54	1066	19.14	1089	19.73	1111	20.32	1134	20.92
17,000	974	18.20	998	18.79	1021	19.39	1044	19.99	1067	20.60	1089	21.21	1112	21.82	1134	22.43	1155	23.05	1176	23.66
18,000	1028	21.01	1050	21.62	1072	22.24	1094	22.86	1116	23.49	1137	24.12	1158	24.75	1179	25.38	1200	26.02	1220	26.65
19,000	1081	24.08	1103	24.71	1124	25.35	1145	25.99	1165	26.63	1185	27.28	1206	27.93	1226	28.58	1245	29.24	1265	29.90
20,000	1135	27.42	1155	28.06	1175	28.72	1195	29.38	1215	30.04	1234	30.71	1254	31.38	1273	32.05	1292	32.72	—	—

50A4,A5,A8,A9 050 (50 TONS) (cont)

Airflow (Cfm)	Available External Static Pressure (in. wg)																			
	2.2		2.4		2.6		2.8		3.0		3.2		3.4		3.6		3.8		4.0	
	rpm	bhp	rpm	bhp	rpm	bhp	rpm	bhp	rpm	bhp	rpm	bhp	rpm	bhp	rpm	bhp	rpm	bhp	rpm	bhp
10,000	941	9.53	970	10.02	998	10.51	1026	11.00	1053	11.51	1080	12.01	1106	12.53	1131	13.05	1156	13.58	1181	14.11
11,000	971	11.02	999	11.52	1026	12.02	1052	12.53	1078	13.05	1103	13.57	1128	14.09	1153	14.63	1177	15.16	1201	15.71
12,000	1004	12.70	1030	13.22	1056	13.74	1081	14.26	1106	14.79	1130	15.33	1154	15.86	1178	16.41	1201	16.96	1224	17.51
13,000	1039	14.59	1064	15.12	1088	15.66	1113	16.20	1136	16.74	1160	17.29	1183	17.85	1206	18.40	1228	18.96	1250	19.53
14,000	1076	16.68	1100	17.23	1123	17.79	1147	18.35	1169	18.91	1192	19.48	1214	20.04	1236	20.62	1257	21.19	1279	21.77
15,000	1115	18.98	1138	19.56	1160	20.14	1182	20.72	1204	21.30	1226	21.88	1247	22.47	1268	23.05	1289	23.65	—	—
16,000	1156	21.52	1178	22.11	1199	22.71	1220	23.31	1241	23.91	1262	24.51	1282	25.12	—	—	—	—	—	—
17,000	1198	24.28	1218	24.90	1239	25.52	1259	26.14	1279	26.76	1299	27.38	—	—	—	—	—	—	—	—
18,000	1240	27.29	1260	27.93	1280	28.57	1300	29.21	—	—	—	—	—	—	—	—	—	—	—	—
19,000	1284	30.55	—	—	—	—	—	—	—	—	—	—	—	—	—	—	—	—	—	—
20,000	—	—	—	—	—	—	—	—	—	—	—	—	—	—	—	—	—	—	—	—

50A4,A5,A8,A9 060 (60 TONS)

Airflow (Cfm)	Available External Static Pressure (in. wg)																			
	0.2		0.4		0.6		0.8		1.0		1.2		1.4		1.6		1.8		2.0	
	rpm	bhp	rpm	bhp	rpm	bhp	rpm	bhp	rpm	bhp	rpm	bhp	rpm	bhp	rpm	bhp	rpm	bhp	rpm	bhp
12,000	490	4.48	543	5.17	591	5.88	634	6.61	674	7.37	711	8.14	746	8.94	779	9.76	811	10.60	841	11.45
14,000	554	6.41	602	7.17	645	7.94	686	8.72	723	9.51	759	10.33	792	11.16	824	12.01	855	12.88	884	13.76
15,000	586	7.56	632	8.34	674	9.14	713	9.94	749	10.77	784	11.60	816	12.45	848	13.32	878	14.21	906	15.11
16,000	619	8.83	663	9.64	703	10.46	741	11.30	776	12.14	810	13.00	841	13.87	872	14.76	901	15.66	929	16.58
17,000	652	10.23	694	11.07	733	11.92	769	12.78	803	13.65	836	14.53	867	15.42	897	16.33	926	17.25	953	18.19
18,000	685	11.76	725	12.63	763	13.51	798	14.39	831	15.29	863	16.20	893	17.11	922	18.04	950	18.98	978	19.93
19,000	719	13.44	757	14.33	793	15.23	827	16.14	860	17.07	890	18.00	920	18.94	949	19.88	976	20.84	1003	21.81
20,000	753	15.26	789	16.18	824	17.10	857	18.04	888	18.99	918	19.94	947	20.90	975	21.87	1002	22.85	1028	23.84
21,000	787	17.23	822	18.17	855	19.12	887	20.08	918	21.05	947	22.03	975	23.02	1002	24.01	1029	25.01	1054	26.02
22,000	821	19.35	855	20.32	887	21.29	918	22.28	947	23.28	976	24.28	1003	25.28	1030	26.30	1056	27.32	1081	28.35
23,000	855	21.63	888	22.62	919	23.62	949	24.63	977	25.65	1005	26.68	1032	27.71	1058	28.75	1083	29.79	1108	30.85
24,000	889	24.07	921	25.08	951	26.11	980	27.14	1008	28.19	1035	29.24	1061	30.29	1086	31.35	1111	32.42	1135	33.49
25,000	924	26.67	954	27.71	983	28.76	1011	29.82	1038	30.89	1065	31.96	1090	33.04	1115	34.12	1139	35.21	1163	36.31
26,000	958	29.45	987	30.51	1016	31.59	1043	32.67	1069	33.76	1095	34.85	1120	35.95	1144	37.06	1168	38.17	1191	39.29
27,000	993	32.40	1021	33.49	1048	34.58	1075	35.69	1101	36.80	1126	37.92	1150	39.04	1174	40.17	1197	41.30	—	—

50A4,A5,A8,A9 060 (60 TONS) (cont)

Airflow (Cfm)	Available External Static Pressure (in. wg)																			
	2.2		2.4		2.6		2.8		3.0		3.2		3.4		3.6		3.8		4.0	
	rpm	bhp	rpm	bhp	rpm	bhp	rpm	bhp	rpm	bhp	rpm	bhp	rpm	bhp	rpm	bhp	rpm	bhp	rpm	bhp
12,000	870	12.33	898	13.22	925	14.13	951	15.06	977	16.00	1002	16.96	1026	17.92	1049	18.90	1072	19.89	1094	20.89
14,000	912	14.67	939	15.59	965	16.52	991	17.47	1016	18.44	1040	19.42	1063	20.41	1086	21.41	1109	22.43	1131	23.46
15,000	934	16.02	961	16.96	987	17.90	1012	18.87	1036	19.84	1060	20.83	1083	21.84	1106	22.85	1128	23.88	1150	24.92
16,000	957	17.51	983	18.46	1008	19.42	1033	20.39	1057	21.38	1081	22.39	1104	23.40	1126	24.43	1148	25.47	1170	26.52
17,000	980	19.13	1006	20.10	1031	21.07	1055	22.06	1079	23.06	1102	24.07	1125	25.10	1147	26.14	1169	27.19	1190	28.26
18,000	1004	20.89	1029	21.87	1054	22.86	1078	23.86	1101	24.88	1124	25.91	1147	26.94	1169	28.00	1190	29.06	—	—
19,000	1028	22.80	1053	23.79	1078	24.80	1101	25.81	1124	26.84	1147	27.89	1169	28.94	1190	30.00	—	—	—	—
20,000	1053	24.85	1078	25.86	1102	26.88	1125	27.91	1148	28.96	1170	30.01	1192	31.08	—	—	—	—	—	—
21,000	1079	27.04	1103	28.07	1126	29.11	1149	30.16	1172	31.22	1194	32.30	—	—	—	—	—	—	—	—
22,000	1105	29.39	1129	30.44	1152	31.50	1174	32.57	1196	33.65	—	—	—	—	—	—	—	—	—	—
23,000	1131	31.90	1155	32.97	1177	34.05	1199	35.13	—	—	—	—	—	—	—	—	—	—	—	—
24,000	1158	34.57	1181	35.66	—	—	—	—	—	—	—	—	—	—	—	—	—	—	—	—
25,000	1186	37.41	—	—	—	—	—	—	—	—	—	—	—	—	—	—	—	—	—	—
26,000	—	—	—	—	—	—	—	—	—	—	—	—	—	—	—	—	—	—	—	—
27,000	—	—	—	—	—	—	—	—	—	—	—	—	—	—	—	—	—	—	—	—

LEGEND

Bhp — Brake Horsepower

NOTES:

1. Fan performance is based on wet coils, economizer, roof curb, cabinet losses, and clean 2-in. filters.
2. Conversion — Bhp to watts:

$$\text{Watts} = \frac{\text{Bhp x 746}}{\text{Motor efficiency}}$$

3. VAV units with variable capacity compressor can operate down to 100 cfm/ton. VAV units with standard scroll compressor or Humidi-MiZer are limited to 200 cfm/ton. Operation may be additionally limited by entering coil conditions.

Fan Performance — Standard and Modulating Power Exhaust

48/50A020-050 (20 to 50 Tons)

Airflow (Cfm)	208 V			230, 460, 575 V		
	ESP	Bhp	Watts	ESP	Bhp	Watts
7,700	0.60	3.69	4140	0.73	3.98	4460
7,900	0.56	3.74	4190	0.69	4.02	4510
8,100	0.51	3.78	4240	0.65	4.07	4560
8,500	0.41	3.83	4290	0.56	4.12	4620
8,900	0.31	3.93	4410	0.47	4.23	4740
9,300	0.20	4.07	4560	0.37	4.37	4900
9,700	0.11	4.17	4670	0.30	4.47	5010
10,100	0.04	4.25	4770	0.23	4.56	5110
10,500	—	—	—	0.17	4.66	5220
10,900	—	—	—	0.12	4.75	5330
11,300	—	—	—	0.07	4.80	5380
11,700	—	—	—	0.04	4.83	5420

48/50A060 (60 Tons)

Airflow (Cfm)	208 V			230, 460, 575 V		
	ESP	Bhp	Watts	ESP	Bhp	Watts
11,550	0.60	5.54	6210	0.73	5.97	6690
11,850	0.56	5.61	6285	0.69	6.03	6765
12,150	0.51	5.67	6360	0.65	6.10	6840
12,750	0.41	5.74	6435	0.56	6.18	6930
13,350	0.31	5.90	6615	0.47	6.34	7110
13,950	0.20	6.10	6840	0.37	6.56	7350
14,550	0.11	6.25	7005	0.30	6.70	7515
15,150	0.04	6.38	7155	0.23	6.84	7665
15,750	—	—	—	0.17	6.98	7830
16,350	—	—	—	0.12	7.13	7995
16,950	—	—	—	0.07	7.20	8070
17,550	—	—	—	0.04	7.25	8130

LEGEND

Bhp — Brake Horsepower
ESP — External Static Pressure (in. wg)
Watts — Input Watts to Motor

High Capacity Power Exhaust Accessory

PART NO.	VOLTAGE	CFM PERFORMANCE VS. STATIC PRESSURE				TOTAL AMPS	NOISE (dB)	
		1/4 in.	3/8 in.	1/2 in.	5/8 in.		at 1 foot	at 10 foot
Single Module								
CRPWREXH071A00	230V/3PH	9,817	9,631	9,591	8,964	12.8	88	77
CRPWREXH072A00	460V/3PH					6.4		
CRPWREXH073A00	575V/3PH					4.8		
Two Module								
CRPWREXH074A00	230V/3PH	19,634	19,262	19,182	17,928	25.6	88	77
CRPWREXH075A00	460V/3PH					12.8		
CRPWREXH076A00	575V/3PH					9.6		
Three Module								
CRPWREXH077A00	230V/3PH	29,451	28,893	28,773	26,892	38.4	88	77
CRPWREXH078A00	460V/3PH					19.2		
CRPWREXH079A00	575V/3PH					14.4		

Humidi-Mizer System Component Pressure Drops (in. wg)
Size 020-035 Units

COMPONENT	AIRFLOW (cfm)					
	4,000	6,000	8,000	10,000	12,000	14,000
HUMIDI-MIZER	0.012	0.022	0.035	0.050	0.068	0.089

Humidi-Mizer System Component Pressure Drops (in. wg)
Size 040,050 Units

COMPONENT	AIRFLOW (cfm)						
	8,000	10,000	12,000	14,000	16,000	18,000	20,000
HUMIDI-MIZER	0.035	0.050	0.068	0.089	0.112	0.137	0.165

Humidi-Mizer System Component Pressure Drops (in. wg)
Size 060 Units

COMPONENT	AIRFLOW (cfm)						
	12,000	14,000	16,000	18,000	20,000	22,000	24,000
HUMIDI-MIZER	0.002	0.004	0.010	0.023	0.044	0.077	0.125

Supply Motor Limitations

PREMIUM-EFFICIENCY MOTORS						
Nominal		Maximum		Maximum Amps		Maximum Efficiency
Bhp	BkW	Bhp	BkW	230 v	460 v	
5	3.73	5.9	4.40	15.8	7.9	89.5
10	7.46	10.2	7.61	30.0	—	91.7
		11.8	8.80	—	15.0	91.7
15	11.19	15.3	11.41	46.0	—	93.0
		18.0	13.43		22.0	93.0
20	14.92	22.4	16.71	59.0	—	93.6
		23.4	17.46	—	28.7	93.6
25	18.65	28.9	21.56	73.0	—	93.6
		29.4	21.93	—	36.3	93.6
30	22.38	35.6	26.56	82.6	—	93.6
		34.7	25.89	—	41.7	93.6
40	29.84	42.0	31.33	110.0	55.0	94.5

LEGEND

Bhp — Brake Horsepower
BkW — Brake Kilowatts

NOTES:

1. Extensive motor and electrical testing on the Carrier units has ensured that the full horsepower range of the motor can be utilized with confidence. Using the fan motors up to the horsepower ratings shown in the Motor Limitations table will not result in nuisance tripping or premature motor failures. Unit warranty will not be affected.
2. All motors comply with Energy Policy Act (EPACT) Standards effective October 24, 1997.

Air Quantity Limits (48A)

UNIT 48A	MINIMUM HEATING AIRFLOW CFM (Low Heat)	MINIMUM HEATING AIRFLOW CFM (High Heat)	MINIMUM COOLING AIRFLOW (VAV) CFM AT FULL LOAD	MINIMUM COOLING AIRFLOW CFM (CV)	MAXIMUM AIRFLOW CFM
020	5,900	6,100	4,000	6,000	10,000
025	5,900	6,100	5,000	7,500	12,500
027	5,900	6,100	5,400	8,100	13,500
030	5,900	6,100	6,000	9,000	15,000
035	5,900	10,100	7,000	10,500	17,500
040	7,600	10,100	8,000	12,000	20,000
050	7,600	10,100	10,000	13,500	20,000
060	11,000	14,700	12,000	18,000	27,000

LEGEND

CV — Constant Volume
Edb — Entering Dry Bulb
Ewb — Entering Wet Bulb
VAV — Variable Air Volume

NOTE: VAV units with variable capacity compressor can operate down to 100 cfm?ton. VAV units with standard scroll compressor or Humidi-MiZer are limited to 200 cfm/ton. Operation may be additionally limited by entering coil conditions.

Air Quantity Limits (50A)

UNIT	COOLING		ELECTRIC HEAT	
	Min CFM	Max CFM*	Min CFM	Max CFM
50A2,A4,A6,A8020	6,000	10,000	6,000	15,000
50A3,A5,A7,A9020	4,000	10,000		
50A2,A4,A6,A8025	7,500	12,500		
50A3,A5,A7,A9025	5,000	12,500		
50A2,A4,A6,A8027	8,100	13,500		
50A3,A5,A7,A9027	5,400	13,500		
50A2,A4,A6,A8030	9,000	15,000		
50A3,A5,A7,A9030	6,000	15,000		
50A2,A4,A6,A8035	10,500	17,500		
50A3,A5,A7,A9035	7,000	17,500		
50A2,A4,A6,A8040	12,000	20,000	10,500	20,000
50A3,A5,A7,A9040	8,000	20,000		
50A2,A4,A6,A8050	13,500	20,000		
50A3,A5,A7,A9050	10,000	20,000		
50A2,A4,A6,A8060	18,000	27,000	15,000	27,000
50A3,A5,A7,A9060	12,000	27,000		

* Operation at these levels may be limited by entering evaporator air wet bulb temperatures.

NOTES:

1. Extensive motor and electrical testing on the Carrier units has ensured that the full horsepower range of the motor can be utilized with confidence. Using the fan motors up to the horsepower ratings shown in the Motor Limitations table will not result in nuisance tripping or premature motor failure. Unit warranty will not be affected.
2. All motors comply with Energy Policy Act (EPACT) Standards effective October 24, 1997.

Control components

The 48/50A Series rooftops use the *Comfort*Link control system that has been developed for use in Carrier Commercial equipment. The control system monitors all operating conditions in the rooftop unit, as well as controlling the compressors, economizers, fans, heat, and other devices. It also has the capability of communicating with the Carrier Comfort Network® devices using the CCN protocol and other popular protocols including BACnet, MODBUS, LonWorks, etc.

The system uses a microprocessor and a series of boards, each with inputs and outputs. A local network communications bus (LEN) ties all the boards together into a system and enables the boards to communicate.

For in-depth detail on the control operation, set points, and configurations, see the 48/50A controls, start-up, service and troubleshooting manual.

For the 48/50A Series, the control consists of the following key components:

Main base board (MBB)

The MBB is the center of the *Comfort*Link control system. It contains the major portion of the operating software and controls the operation of the unit. The MBB continuously monitors inputs and outputs as well as data from the LEN and CCN communications channels. The MBB also controls 11 output relays. A complete list of the MBB and system I/O are contained in the table on page 74. The board is located in the main control box.

Economizer control board (ECB1)

The ECB1 controls the economizer actuator. The ECB1 controls the economizer motor using a digital communications signal that also provides operation and diagnostic data on the economizer motor. The ECB1 also controls the operation of the power exhaust motors and provides up to 6 stages of digitally sequenced power exhaust. Exhaust sequencing can be based on either the economizer motor position or the building pressure. On the A Series unit, the ECB1 board is located in an auxiliary box located at the end of the unit near the economizer motor. The board also contains a second LEN port that can be used with the handheld Navigator™ display.

Supply and building pressure control board (ECB2 or RXB)

The board, which is the same hardware as the ECB1, is used to control the supply fan inverter on the VAV units. It sends a 4 to 20 mA signal to the inverter based on a supply duct pressure sensor connected to the board. The board also accepts a signal from another pressure sensor that monitors building pressure and controls the operation of the optional modulating power exhaust system.

On units equipped with the variable capacity compressor and/or Humidi-MiZer system, this board is called the RXB. The RXB performs the same functions as the ECB2 and has additional inputs and outputs to control the variable capacity compressor as well as the Humidi-MiZer adaptive dehumidification system. The ECB2/RXB is located in the auxiliary control box.

Staged gas heat board (SCB)

When the optional staged gas heat is used, the SCB board will be installed and will control the operation of the gas valves. It also provides additional sensors for monitoring the supply air temperature. This board is located in the gas heat section of the unit.

Integrated gas controller (IGC)

One IGC is provided with each bank of gas heat exchangers. It controls the direct spark ignition system and monitors the rollout switch, limit switches, and flue gas pressure switch. It is equipped with an LED for diagnostics.

Controls expansion module (CEM)

The optional expansion module is used to provide inputs for demand limiting, remote set point, and other optional inputs. It is located in the main control box.

Compressor protection Cycle-LOC™ board (CS)

This board monitors the status of the compressor by sensing the current flow to the compressors; it then provides digital status signal to the MBB.

Expansion valve control board (EXV)

The optional EXV board controls both the condenser and bypass modulation valves of the Humidi-MiZer. This board also receives inputs to sense the evaporative discharge temperature if the unit has the Humidi-MiZer option. This board is located in the auxiliary control box.

Scrolling marquee display

This device is the keypad interface used to access the control information, read sensor values, test the unit, and monitor alarm status. The marquee display is a 4-key, 4-character, 16-segment LED (light-emitting diode) display. The display is very easy to operate using 4 buttons and a group of 11 LEDs that indicate the following menu structures:

- Run Status
- Service Test
- Temperatures
- Pressures
- Set Points
- Inputs
- Outputs
- Configuration
- Timeclock
- Operating Modes
- Alarms

Through the display, inputs and outputs can be checked for their value or status. Because the unit is equipped with suction pressure transducers and discharge saturation temperature sensors, it can also display pressures typically obtained from gauges. The control includes a full alarm history which can be accessed from the display. Through the display, a built-in test routine can be used at start-up commission and during maintenance inspections to help diagnose operational problems with the unit.

Main Base Board (MBB) Inputs and Outputs

POINT NAME	POINT DESCRIPTION	I/O POINT NAME	PLUG AND PIN REFERENCE	SIGNAL PIN(S)	PORT STATE
INPUTS					
GASFAN	YAC Indoor Fan relay (fan request from YAC)	DI1	J6, 3-4	4	0 = 24vac, 1= 0vac
FSD	Fire Shutdown switch input	DI2	J6, 5-6	6	0 = 24vac, 1= 0vac
G	Thermostat 'G' input/Remote Occupied	DI3	J7, 1-2	2	0 = 24vac, 1= 0vac
W2	Thermostat 'W2' input	DI4	J7, 3-4	4	0 = 24vac, 1= 0vac
W1	Thermostat 'W1' input	DI5	J7, 5-6	6	0 = 24vac, 1= 0vac
Y2	Thermostat 'Y2' input	DI6	J7, 7-8	8	0 = 24vac, 1= 0vac
Y1	Thermostat 'Y1' input	DI7	J7, 9-10	10	0 = 24vac, 1= 0vac
CSB_A1	Compressor A1 current sensor	DIG1	J9, 10-12	10=5v, 11=Vin, 12=GND	0 = 5vdc, 1 = 0vdc
CSB_A2	Compressor A2 current sensor	DIG2	J9, 7-9	7=5v, 8=Vin, 9=GND	0 = 5vdc, 1 = 0vdc
CSB_B1	Compressor B1 current sensor	DIG3	J9, 4-6	4=5v, 5=Vin, 6 =GND	0 = 5vdc, 1 = 0vdc
CSB_B2	Compressor B2 current sensor	DIG4	J9, 1-3	1=5v, 2=Vin, 3=GND	0 = 5vdc, 1 = 0vdc
DP_A/SCTA	Circuit A saturated condensing pressure/temp	AN1	J8, 21-23	21=5v, 22=Vin, 23=GND (thermistor 21-22)	(0-5vdc, thermistor, ohms)
DP_B/SCTB	Circuit B saturated condensing pressure/temp	AN2	J8, 24-26	24=5v, 25=Vin, 26=GND (thermistor 24-25)	(0-5vdc, thermistor, ohms)
SP_A/SSTA	Circuit A saturated suction pressure/temp	AN3	J8, 15-17	15=5v, 16=Vin, 17=GND (thermistor 15-16)	(0-5vdc, thermistor, ohms)
SP_B/SSTB	Circuit B saturated suction pressure/temp	AN4	J8, 18-20	18=5v, 19=Vin, 20=GND (thermistor 18-20)	(0-5vdc, thermistor, ohms)
RAT	Return air temperature	AN5	J8, 9-10	9	(thermistor, ohms)
SA_TEMP	Supply air temperature	AN6	J8, 11-12	11	(thermistor, ohms)
OAT	Outdoor air temperature	AN7	J8, 13-14	13	(thermistor, ohms)
SPT	Space temperature (T55/56)	AN8	J8, 1-2	1	(thermistor, ohms)
SPTO	Space temperature offset (T56)	AN9	J8, 3-4	3	(thermistor, ohms)
IAQ/IAQMINOV	IAQ analog input	AN10	J8, 5-6	5	(thermistor, ohms)
FLTS	Filter Status	AN11	J8, 7-8	7	(thermistor, ohms)
OUTPUTS					
CMPB2	Compressor B2	RLY 1	J10, 20-21	20 = RLY1A (=RLY2A), 21 = RLY1B	1 = Closes RLY1A/RLY1B
CMPB1	Compressor B1	RLY 2	J10, 22-23	22 = RLY2A (=RLY1A), 23 = RLY2B	1 = Closes RLY2A/RLY2B
CMPA2	Compressor A2	RLY 3	J10, 24-25	24 = RLY3A (=RLY4A), 25 = RLY3B	1 = Closes RLY3A/RLY3B
CMPA1	Compressor A1	RLY 4	J10, 26-27	26 = RLY4A (=RLY3A), 27 = RLY4B	1 = Closes RLY4A/RLY4B
CONDFANB	Condenser fan B	RLY 5	J10, 10-11	10 = RLY5A (=RLY6A), 11 = RLY5B	1 = Closes RLY5A/RLY5B
CONDFANA	Condenser fan A	RLY 6	J10, 12-13	12 = RLY6A (=RLY5A), 13 = RLY6B	1 = Closes RLY6A/RLY6B
HS2	Heat stage 2	RLY7	J10, 14-16	14 = 15 = RLY7A, 16 = RLY7B	1 = Closes RLY7A/RLY7B
HS1	Heat stage 1	RLY 8	J10, 17-19	17 = 18 = RLY8A, 19 = RLY8B	1 = Closes RLY8A/RLY8B
HIR	Heat interlock relay	RLY 9	J10, 4-6	4 = 5 = RLY9A, 6 = RLY9B	1 = Closes RLY9A/RLY9B
SF	Supply fan	RLY 10	J10, 7-9	7 = 8 = RLY10A, 9 = RLY10B	1 = Closes RLY10A/RLY10B
ALRM	Alarm output relay	RLY 11	J10, 1-3	1 = 2 = RLY11A, 3 = RLY11B	1 = Closes RLY11A/RLY11B

LEGEND

IAQ — Indoor-Air Quality
YAC — Gas Heat Unit

Controls Expansion Module (CEM) Inputs

POINT NAME	POINT DESCRIPTION	I/O POINT NAME	PLUG AND PIN REFERENCE	SIGNAL PIN(S)	PORT STATE
INPUTS					
SFS	Supply Fan Status switch	DI 1	J7, 1-2	2	0 = 24vac, 1= 0vac
DMD_SW1	Demand Limit - SW1	DI 2	J7, 3-4	4	0 = 24vac, 1= 0vac
DMD_SW2/DHDISCIN	Demand Limit - SW2 / Dehumidification Switch Input	DI 3	J7, 5-6	6	0 = 24vac, 1= 0vac
PRES	Pressurization	DI 4	J7, 7-8	8	0 = 24vac, 1= 0vac
EVAC	Evacuation	DI 5	J7, 9-10	10	0 = 24vac, 1= 0vac
PURG	Purge	DI 6	J7, 11-12	12	0 = 24vac, 1= 0vac
IAQIN	Indoor Air Quality Switch	DI 7	J7, 13-14	14	0 = 24vac, 1= 0vac
		AN7	J6, 1-3	2 (1 = loop power)	(0-20mA input)
DMDLMTMA	4-20mA Demand Limit	AN8	J6, 4-6	5 (4 = loop power)	(0-20mA input)
EDTRESMA	4-20mA Evaporator Discharge SP Reset	AN9	J6, 7-9	8 (7 = loop power)	(0-20mA input)
OAQ	Outside Air CO_2 Sensor	AN10	J6, 10-12	11 (10 = loop power)	(0-20mA input)
SPRESET	SP Reset milliamps	AN10	J6, 10-12	11 (10 = loop power)	(0-20mA input)
CEM_10K1/CEM_4201	CEM AN1 10k temp J5,1-2/CEM AN1 4-20 ma J5,1-2	AN1	J5, 1-2	1	(thermistor, ohms)
CEM_10K2/CEM_4202	CEM AN2 10k temp J5,3-4/CEM AN2 4-20 ma J5,3-4	AN2	J5, 3-4	3	(thermistor, ohms)
CEM_10K3/CEM_4203	CEM AN3 10k temp J5,5-6/CEM AN3 4-20 ma J5,5-6	AN3	J5, 5-6	5	(thermistor, ohms)
CEM_10K4/CEM_4204	CEM AN4 10k temp J5,7-8/CEM AN4 4-20 ma J5,7-8	AN4	J5, 7-8	7	(thermistor, ohms)
		AN5	J5, 9-10	9	(thermistor, ohms)
		AN6	J5, 11-12	11	(thermistor, ohms)

Economizer Control Board (ECB1) Inputs and Outputs

POINT NAME	POINT DESCRIPTION	I/O POINT NAME	PLUG AND PIN REFERENCE	SIGNAL PIN(S)	PORT STATE
INPUTS					
RMTIN	Remote occupancy	DI1	J4, 1-2	2	24VAC = 1, 0VAC = 0
ECONENBL, ECOORIDE	Economizer enable	DI2	J4, 3-4	4	24VAC = 1, 0VAC = 0
RARH	Return air relative humidity	AN1	J5, 1-3	1=24VDC, 2=0-20mA in, 3=GND	0-20mA
OARH	Outdoor air relative humidity	AN2	J5, 4-6	4=24VDC, 5=0-20mA in, 6=GND	0-20mA
OUTPUTS					
ECB1_AO1	ECB1, analog output 1	AO1	J9, 1-2	1=0-20mA, 2=GND	0-20mA OUT
ECONOCMD	Economizer actuator (digital control)	PP/MP	J7, 1-3	1=PP/MP Data, 2=24VAC, 3=GND	Belimo PP/MP Protocol
PE_A	Power Exhaust stage A	RLY1	J8, 1-3	1 = 2 = RLY1A, 3 = RLY1B	1 = Closes RLY1A/RLY1B
PE_B	Power Exhaust stage B	RLY 2	J8, 4-6	4 =5 = RLY2A, 6 = RLY2B	1 = Closes RLY2A/RLY2B
PE_C	Power Exhaust stage C	RLY 3	J8, 7-9	7 = 8 = RLY3A, 9 = RLY3B	1 = Closes RLY3A/RLY3B
ECON_PWR	Economizer Power	RLY 6	J8, 16-18	16 = 17 = RLY6A, 18 = RLY6B	1 = Closes RLY6A/RLY6B

RXB Control Board (ECB2) Inputs and Outputs

POINT NAME	POINT DESCRIPTION	I/O POINT NAME	PLUG AND PIN REFERENCE	SIGNAL PIN(S)	PORT STATE
INPUTS					
		DI1	J4, 1-2	2=Vin, 1=24VAC	24VAC = 1, 0VAC = 0
		DI2	J4, 3-4	4=Vin, 3=24vac	24VAC = 1, 0VAC = 0
		DI3	J4, 5-6	6=Vin, 5=24vac	
		DI4	J4, 7-8	8=Vin, 7=24vac	
		DI5	J4, 9-10	10=Vin, 9=24vac	
		DI6	J4, 11-12	12=Vin, 11=24vac	
BP	Building static pressure	AN1	J5, 1-3	1=24VDC, 2=0-20mA in, 3=GND	0-20mA
SP	Supply Duct static pressure	AN2	J5, 4-6	4=24VDC, 5=0-20mA in, 6=GND	0-20mA
CCT	Air Temp Lvg Evap Coil	AN3	J6, 1-2	1=Vin, 2=GND	(thermistor, ohms)
DSDT	DS Discharge Temperature	AN4	J6, 3-4	3=Vin, 4=GND	(thermistor, ohms)
		AN5	J6, 5-6	5=Vin, 6=GND	(thermistor, ohms)
		AN6	J6, 7-8	7=Vin, 8=GND	(thermistor, ohms)
OUTPUTS					
SFAN_VFD	Supply Fan Inverter speed	AO1	J9, 1-2	1=0-20mA, 2=GND	0-20mA OUT
CMPDSCAP	Digital Scroll Solenoid	PP/MP	J7, 1-3	1=PP/MP Data, 2=24VAC, 3=GND	Belimo PP/MP Protocol
		RLY1	J8, 1-3	1 = 2 = RLY1A, 3 = RLY1B	1 = Closes RLY1A / RLY1B
		RLY2	J8, 4-6	4 = 5 = RLY2A, 6 = RLY2B	1 = Closes RLY2A / RLY2B
HUM3WVAL	Humidimizer 3 Way Valve	RLY3	J8, 7-9	7 = 8 = RLY3A, 9 = RLY3B	1 = Closes RLY3A / RLY3B
		RLY4	J8, 10-12	10 = 11 = RLY4A, 12 = RLY4B	1 = Closes RLY4A / RLY4B
		RLY5	J8, 13-15	13 = 14 = RLY5A, 15 = RLY5B	1 = Closes RLY5A / RLY5B
HGBP	Hot gas bypass	RLY 6	J8, 16-18	16 = 17 = RLY6A, 18 = RLY6B	1 = Closes RLY6A / RLY6B

NOTE: RXB is required for Digital Scroll or Humidi-MiZer option.

Staged Gas Heat Board (SCB) Inputs and Outputs

POINT NAME	POINT DESCRIPTION	I/O POINT NAME	PLUG AND PIN REFERENCE	SIGNAL PIN(S)	PORT STATE
INPUTS					
		AN1	J5, 1-3	1=5v, 2=Vin, 3=GND (thermistor 1-2)	(0-5VDC, thermistor, ohms)
		AN2	J5, 4-6	4=5v, 5=Vin, 6=GND (thermistor 4-5)	(0-5VDC, thermistor, ohms)
LAT1SGAS	Leaving air temperature 1	AN3	J5, 7-9	7=5v, 8=Vin, 9=GND (thermistor 7-8)	(0-5VDC, thermistor, ohms)
LAT2SGAS	Leaving air temperature 2	AN4	J5, 10-12	10=5v, 11=Vin, 12=GND (thermistor 10-11)	(0-5VDC, thermistor, ohms)
LAT3SGAS	Leaving air temperature 3	AN5	J5, 13-15	13=5v, 14=Vin, 15=GND (thermistor 13-14)	(0-5VDC, thermistor, ohms)
		AN6	J6, 1-3	1=5v, 2=Vin, 3=GND (thermistor 1-2)	(0-5VDC, thermistor, ohms)
		AN7	J6, 4-6	4=5v, 5=Vin, 6=GND (thermistor 4-5)	(0-5VDC, thermistor, ohms)
		AN8	J6, 7-9	7=5v, 8=Vin, 9=GND (thermistor 7-8)	(0-5VDC, thermistor, ohms)
		AN9	J7, 1-2	1	(thermistor, ohms)
		AN10	J7, 3-4	3	(thermistor, ohms)
OUTPUTS					
		AO1	J8, 1-2	1=0-20mA, 2=GND	0-20mA OUT
		AO2	J8, 3-4	3=0-20mA, 4=GND	0-20mA OUT
HS3	Heat Stage 3	RLY1	J9, 1-3	1 = 2 = RLY1A, 3 = RLY1B	1 = Closes RLY1A/RLY1B
HS4	Heat Stage 4	RLY 2	J9, 4-6	4 =5 = RLY2A, 6 = RLY2B	1 = Closes RLY2A/RLY2B
HS5	Heat Stage 5	RLY 3	J9, 7-9	7 = 8 = RLY3A, 9 = RLY3B	1 = Closes RLY3A/RLY3B
HS6	Heat Stage 6	RLY 4	J9, 10-12	10 = 11 = RLY4A, 12 = RLY4B	1 = Closes RLY4A/RLY4B
		RLY 5	J9, 13-15	13 = 14 = RLY5A, 15 = RLY5B	1 = Closes RLY5A/RLY5B

Humidi-Mizer Control Board (EXV) Inputs and Outputs

POINT NAME	POINT DESCRIPTION	I/O POINT NAME	PLUG AND PIN REFERENCE	SIGNAL PIN(S)	PORT STATE
INPUTS					
CCT	Air Temp Lvg Evap Coil	AN1	J5, 5-6	5=Vin, 6=GND	(Thermistor, ohms)
		AN2	J5, 7-8	7=Vin,8 =GND	(Thermistor, ohms)
		AN3	J5, 9-10	9=Vin, 10=GND	(Thermistor, ohms)
		AN4	J5, 11-12	11=Vin, 12=GND	(Thermistor, ohms)
		AN5	J5, 1-2	1=Vin, 2=GND	0-20mA INPUT
		AN6	J5, 3-4	3=Vin, 4=GND	0-20mA INPUT
OUTPUTS					
COND_EXV	Condenser EXV Position	OUTA			
		Coil1A	J6,1	1	HI Z when P5.7 and P5.6 = 0 +12 vdc when P5.7 = 1 and P5.6 = 0 0 vdc when P5.7 = 0 and P5.6 = 1 PROHIBITED when P5.7 = 1 and P5.6 = 1
		Coil2A	J6,2	2	HI Z when P5.5 and P5.4 = 0 +12 vdc when P5.5 = 1 and P5.4 = 0 0 vdc when P5.5 = 0 and P5.4 = 1 PROHIBITED when P5.5 = 1 and P5.4 = 1
		12VDC	J6, 3	3	Power Output
		Coil3A	J6,4	4	HI Z when P5.3 and P5.2 = 0 +12 vdc when P5.3 = 1 and P5.2 = 0 0 vdc when P5.3 = 0 and P5.2 = 1 PROHIBITED when P5.3 = 1 and P5.2 = 1
		Coil4A	J6,5	5	HI Z when P5.1 and P5.0 = 0 +12 vdc when P5.1 = 1 and P5.0 = 0 0 vdc when P5.1 = 0 and P5.0 = 1 PROHIBITED when P5.1 = 1 and P5.0 = 1
COND_EXV	Bypass EXV Position	OUTB			
		Coil1B	J7,1	1	HI Z when P8.7 and P8.6 = 0 +12 vdc when P8.7 = 1 and P8.6 = 0 0 vdc when P8.7 = 0 and P8.6 = 1 PROHIBITED when P8.7 = 1 and P8.6 = 1
		Coil2B	J7,2	2	HI Z when P8.5 and P8.4 = 0 +12 vdc when P8.5 = 1 and P8.4 = 0 PROHIBITED when P8.5 = 1 and P8.4 = 1
		12VDC	J7,3	3	Power Output
		Coil3B	J7,4	4	HI Z when P8.3 and P8.2 = 0 +12 vdc when P8.3 = 1 and P8.2 = 0 0 vdc when P8.3 = 0 and P8.2 = 1 PROHIBITED when P8.3 = 1 and P8.2 = 1
		Coil4B	J7,5	5	HI Z when P8.1 and P8.0 = 0 +12 vdc when P8.1 = 1 and P8.0 = 0 0 vdc when P8.1 = 0 and P8.0 = 1 PROHIBITED when P8.1 = 1 and P8.0 = 1

Input/Output Channel Designations — Field Connection Terminal Strips

TERMINAL BOARD	TERMINAL NO.	DESCRIPTION	TYPE
TB-1 - POWER CONNECTION OR DISCONNECT (in Main Control Box)			
TB1	11	L1 power supply	208-230/460/575/380/-3-60
	12	L2 power supply	208-230/460/575/380/-3-60
	13	L3 power supply	208-230/460/575/380/-3-60
TB-2 - GROUND (in Main Control Box)			
TB2	1	Neutral Power	
TB-3 - CCN COMMUNICATIONS (HY84HA096) (in Main Control Box)			
TB3	1	LEN +	5 VDC, logic
	2	LEN C	5 VDC, logic
	3	LEN –	5 VDC, logic
	4	24 VAC	24 VAC
	5	CCN +	5 VDC, logic
	6	CCN C	5 VDC, logic
	7	CCN –	5 VDC, logic
	8	Grd	ground
TB-4 - THEROMSTAT CONNECTIONS (HY84HA090) (in Main Control Box)			
TB4	1	Thermostat R	24 VAC Power
	2	Thermostat Y1	24 VAC Input
	3	Thermostat Y2	24 VAC Input
	4	Thermostat W1	24 VAC Input
	5	Thermostat W2	24 VAC Input
	6	Thermostat G	24 VAC Input
	7	Thermostat C	24 VAC Common
	8	Thermostat X (Alarm Contact)	24 VAC Output
TB-5 - FIELD CONNECTIONS (HY84HA101) (in Main Control Box)			
TB5	1	VAV Heater Interlock Relay, Ground	Dry Contact, Max 1 Amp
	2	VAV Heater Interlock Relay, 24 VAC	Dry Contact, Max 1 Amp
	3	T55/T56 10 K Thermistor	Thermistor Input
	4	T55/T56 10 K Thermistor	Thermistor Input
	5	T56 Set Point Adjustment (100,000 ohm)	Thermistor Input
	6	Indoor Air IAQ Remote Sensor/Remote Pot/Remote 4-20 mA	4-20 mA, ext. powered w/res or 0-5 VDC, +
	7	Indoor Air IAQ Remote Sensor/Remote Pot/Remote 4-20 mA	4-20 mA, ext. powered w/res or 0-5 VDC, –
	8	Smoke Detector Remote Alarm	external contacts
	9	Smoke Detector Remote Alarm	external contacts
	10	Fire Shutdown	24 VAC Power
	11	Fire Shutdown	24 VAC Input
	12	Fire Control[a]	24 VAC Power
	13	Fire Pressurization[a]	24 VAC Input
	14	Fire Evacuation[a]	24 VAC Input
	15	Fire Smoke Purge[a]	24 VAC Input
	16	Not Used	—
TB-6 - FIELD CONNECTIONS (HY84HA101) (in Main Control Box)			
TB6	1	Remote Occupied/Economizer Enable 24 VAC	24 VAC Power
	2	Remote Economizer Contact	24 VAC Input
	3	Remote Occupied Contact	24 VAC Input
	4	Demand Limit Contacts Common[a]	24 VAC Power
	5	Demand Limit SW1[a]	24 VAC Input
	6	Demand Limit SW2 / Dehumidification Switch[a]	24 VAC Input
	7	Demand Limit 4-20 mA[a]	externally powered 4-20 mA
	8	Demand Limit 4-20 mA[a]	externally powered 4-20 mA
	9	Remote Supply Air Setpoint 4-20 mA[a]	externally powered 4-20 mA
	10	Remote Supply Air Setpoint 4-20 mA[a]	externally powered 4-20 mA
	11	Outdoor Air IAQ 4-20 mA[a]	externally powered 4-20 mA
	12	Outdoor Air IAQ 4-20 mA[a]	externally powered 4-20 mA
	13	IAQ Remote Switch[a]	24 VAC Power
	14	IAQ Remote Switch[a]	24 VAC Input
	15	Supply Fan Status Switch[a]	24 VAC Power
	16	Supply Fan Status Switch[a]	24 VAC Input
TB-7 - ELECTRIC HEAT POWER BLOCK (in Electric Heat section)			
TB7	1	L1 Power Supply	208-230/460/575/380/-3-60, 400-3-50
	2	L2 Power Supply	208-230/460/575/380/-3-60, 400-3-50
	3	L3 Power Supply	208-230/460/575/380/-3-60, 400-3-50

NOTE(S):

a. Requires optional Controls Expansion Module (CEM).

Cooling control options

The 48/50A series is available with the following cooling capacity control options

- 3 cooling stages on 20-27 ton units
- 4 cooling stages on 30-60 ton units
- Optional lead circuit variable capacity digital compressor
- Optional hot gas bypass (HGBP) valve on lead circuit
- Full economizer or integrated economizer cooling

*Comfort*Link is designed to optimize cooling staging for each configuration to maximize comfort control and ensure reliable operation. To help meet a variety of application, the A series *Comfort*Link can be configured for three different control types:

- Space temperature multiple stage (SPT-MULTI)
- Variable air volume return air temperature control (VAV-RAT) with optional unoccupied space temperature sensing (VAV-SPT)
- Thermostat multiple stage (TSTAT-MULTI)

The cooling control method can be selected independently of the fan control method for maximum flexibility.

CONTROL TYPE	COOLING DEMAND SOURCE	INTENDED APPLICATION
SPT-MULTI	Space temperature	Single zone
VAV-RAT/SPT	Return air temperature	Multi-zone
TSTAT-MULTI	Thermostat	Single zone
	DDC control	Single zone or multi-zone

Control type

The control type determines the selection of the type of cooling control as well as the technique for selecting a cooling mode. The control types are:

VAV-RAT and VAV-SPT

Both configurations are intended for multi-zone VAV applications. If the control is occupied, the supply fan is run continuously, and return air temperature will be used in the determination of a cooling demand based on a calculated occupied cooling set point.

When in occupied VAV COOL mode, the capacity of the economizer and compressors are controlled to maintain the supply air temperature at the occupied cooling supply air set point. The cooling capacity control method uses an adaptive PID (proportional, integral, derivative) algorithm (referred to as SumZ) to calculate the estimated change in supply air temperature before engaging or disengaging the next stage of cooling. The algorithm compensates for varying conditions, including changing flow rates across the evaporator coil, to provide better overall control of compressor staging.

Unoccupied cooling will follow the same demand determination as SPT-MULTI, but uses return air temperature instead of space temperature. If the unit is configured for VAV-SPT, the supply fan will be enabled for 10 minutes when the space temperature is above the unoccupied cooling set point. After 10 minutes, the unit will use return air temperature to determine demand.

SPT-MULTI

This configuration is intended for single zone applications. The supply fan can be configured to operate continuously or intermittently with demand during occupied mode and intermittently with demand or off during unoccupied mode.

The space temperature is compared to the occupied or unoccupied cooling set point to determine cooling demand. When the space temperature is slightly above the cooling set point, the unit will operate in LOW COOL mode. When the space temperature is well above the cooling set point, the unit will operate in HIGH COOL mode.

When in LOW COOL or HIGH COOL mode, the cooling capacity of the economizer and compressors are controlled to maintain the supply air temperature at the low cool or high cool supply air set point. SPT-MULTI uses the same SumZ cooling capacity control algorithm as VAV RAT/SPT.

TSTAT-MULTI

This configuration is intended for single zone applications with a two stage heat/cool thermostat or single or multi-zone applications with field provided DDC control. The supply fan can be configured to operate continuously or intermittently with demand during occupied mode and intermittently with demand or off during unoccupied mode.

The unit will monitor the physical or network thermostatic inputs to determine cooling demand. An active Y1 input will enable LOW COOL mode, and an active Y2 signal will enable HIGH COOL mode.

When in LOW COOL or HIGH COOL mode, the cooling capacity of the economizer and compressors are controlled to maintain the supply air temperature at the low cool or high cool supply air set point. TSTAT-MULTI uses the same SumZ cooling capacity control algorithm as VAV RAT/SPT and SPT-MULTI.

Integrated economizer

For each of the above modes of operation, all mechanical cooling will first be delayed while the unit attempts to use the economizer for free cooling. Once the economizer is at full capacity, the control will then supplement the free cooling with as much mechanical cooling as required. To prevent any rapid changes in cooling, the control will also use the economizer to trim the cooling supplied.

Cooling tempering control

Multi-staged gas heat is required for applications with low mixed air temperatures but with constant building cooling loads. In LOW COOL, or HIGH COOL mode when the economizer dampers are at their minimum ventilation position and the mixed-air temperature is below the supply air set point, the multi-staged gas heat is enabled and will stage to heat the air up to the occupied cooling supply air set point.

Heating control options

When heating is required, the A Series units can be provided with 2-stage electric heat, 2-stage gas heat, or multi-stage (staged) gas heat. Depending on unit size and heating capacity, the multiple-stage option may have between 5 and 11 stages of heating capacity control.

The A Series ComfortLink controls have the capability to control the heating capacity based the unit control type (VAV-RAT/SPT, SPT-MULTI, TSTAT-MULTI) and heat type (two-stage or multi-stage).

VAV-RAT/SPT

Both configurations are intended for multi-zone VAV applications. VAV air terminals can be commanded to open to the heating airflow position through Airside Linkage (with CCN or Open VAV control) or the heat interlock relay.

If the control is occupied, the supply fan is run continuously, and return air temperature will be used in the determination of a heating demand based on the occupied or unoccupied heating set point. Multi-stage heat is recommended for VAV-RAT/SPT applications.

Multi-stage heat: When the return air temperature is slightly below the occupied or unoccupied heating set point, the unit enters LOW HEAT mode. The unit will stage the heater to maintain the heating supply air temperature set point. When the return air temperature is well below the occupied or unoccupied heating set points or the supply air temperature is below 50°F, the unit enters HIGH HEAT mode and the heater is operated at full capacity.

Two-stage heat: When the return air temperature is slightly below the occupied or unoccupied heating set point, the unit enters LOW HEAT mode. The unit will enable the lowest heater stage, which is 50% capacity for electric or 75% capacity for gas heat. When the return air temperature is well below the occupied or unoccupied heating set points or the supply air temperature is below 50°F, the unit enters HIGH HEAT mode and the heater is operated at full capacity. Two-stage heat is not recommended for VAV applications.

SPT-MULTI

This configuration is intended for single zone applications. The supply fan can be configured to operate continuously or intermittently with demand during occupied mode and intermittently with demand or off during unoccupied mode.

Multi-stage heat: When the return air temperature is slightly below the occupied or unoccupied heating set point, the unit enters LOW HEAT mode. The unit will stage the heater to maintain the heating supply air temperature set point. When the return air temperature is well below the occupied or unoccupied heating set points or the supply air temperature is below 50°F, the unit enters HIGH HEAT mode and the heat is operated at full capacity.

Two-stage heat: When the return air temperature is slightly below the occupied or unoccupied heating set point, the unit enters LOW HEAT mode. The unit enables the lowest heater stage, which is 50% capacity for electric or 75% capacity for gas heat. When the return air temperature is well below the occupied or unoccupied heating set points or the supply air temperature is below 50°F, the unit enters HIGH HEAT mode and the heater is operated at full capacity.

TSTAT-MULTI

This configuration is intended for single zone applications with a two stage heat/cool thermostat or single or multi-zone applications with field provided DDC control. The unit will monitor the physical or network thermostatic inputs to determine heating demand. The supply fan can be configured to operate continuously or intermittently with demand during occupied mode and intermittently with demand or off during unoccupied mode.

Multi-stage heat: When the W1 input is active, the unit enters LOW HEAT mode. The unit will stage the heater to maintain the heating supply air temperature set point. When W2 is active or the supply air temperature is below 50°F, the unit enters HIGH HEAT mode and the heater is operated at full capacity. Multi-stage heat is recommended for multi-zone VAV applications.

Two-stage heat: When the W1 input is active, the unit enters LOW HEAT mode. The unit enable the lowest heater stage, which is 50% capacity for electric or 75% capacity for gas heat. When W2 is active or the supply air temperature is below 50°F, the unit enters HIGH HEAT mode and the heater is operated at full capacity.

Tempering control

When a unit is equipped with multi-staged gas heat, tempering operation is available during VENT, LOW COOL, or HIGH COOL modes to prevent from discharging very cold air when the outdoor air damper is at the minimum position and the mixed air temperature is very cold. Tempering can also be used during a preoccupancy purge to prevent low temperature air from being delivered to the space.

Economizer and IAQ options

The controls have been designed to support the requirements of indoor air quality control through the use of outside air. Units can be equipped either with an adjustable, self-closing outdoor air damper or with a fully modulating economizer with ultra-low leak dampers. The economizer can be configured for a full modulation mode or 3-position mode of operation. The control includes logic for a minimum ventilation position and different set points for occupied and unoccupied minimum position set points. This control also has logic built in to calibrate the economizer position to the actual percentage of outside air introduced. During periods when the compressors are not being used, the control will use the RAT, SAT and OAT to calibrate the economizer. This will allow for setting the outside air actual percentage, not just the percent damper position.

The use of the economizer will depend on the mode of change selected. This control integrates the changeover directly into the control. Four types of changeover are available:

- Outdoor air dry bulb
- Differential dry bulb
- Outdoor air enthalpy
- Differential enthalpy

The units are provided with an outdoor air and return air temperature sensor so the first two changeover methods are available as standard. To use the enthalpy changeover options, the control supports the addition of highly reliable electronic humidity or enthalpy sensors. The humidity sensor input is then used with the dry bulb sensors to calculate the enthalpy. For outdoor enthalpy changeover the control also has the ASHRAE 90.1 A, B, C, D economizer changeover curves built into the software.

Building pressure control — When operating with outside air economizers, large amounts of air can be introduced into the building and a means must be provided for building pressure relief. The 48/50A Series control supports the following three types of building pressure control:

- Relief Dampers — Can be used on low return duct static applications
- Non-Modulating Two-Stage Power Exhaust — The unit can be equipped with multiple power exhaust fans—four on sizes 020-050 and six on size 060. The software controls the power exhaust stages based on the economizer position (percent open).
- Modulating Power Exhaust — Both the VAV and CV/SAV units can be equipped with power exhaust fans that are controlled by a building pressure sensor that is connected

to the *Comfort*Link controller. The fans are in groups which allow for 4 stages on sizes 020-050 and 6 stages on size 060.

- High Capacity Power Exhaust (field-installed) — Both the VAV and CV/SAV units can be equipped with the field-installed high capacity power exhaust. These motors are modulated via VFDs which are controlled by a building pressure sensor that is connected to the *Comfort*Link controller. The VFDs provide full modulation and precise building pressure control.

The units are capable of using either 2-in. or optional 4-in. pleated filters and can have an optional filter pressure drop switch to warn of dirty filter conditions.

The indoor air quality (IAQ) function provides a demand-based control for ventilation air quantity, by providing a modulating outside air damper position that is proportional to the space CO_2 level. The ventilation damper position is varied between a minimum ventilation level (based on internal sources of contaminants and CO_2 levels other than the effect of people) and the maximum design ventilation level (determined at maximum populated status in the building). During a less-than-fully populated space period, the CO_2 level will be lower than that at full-load design condition and will require less ventilation air. Reduced quantities of ventilation air will result in reduced operating costs. Space CO_2 levels are monitored and compared to user-configured set points. Accessory CO_2 sensor for space (or return duct mounting) is required. The IAQ routine can be enhanced by also installing a sensor for outdoor air (CEM required).

During the occupied period, in the absence of a demand for cooling using outside air, if CO_2 levels are below the set point for the minimum ventilation level, the outside-air damper will open to the minimum ventilation level damper position set point. The minimum damper position will be maintained as long as the CO_2 level remains below the set point.

When the space CO_2 level exceeds set point for the minimum ventilation level condition, the *Comfort*Link controls will begin to open the outside air damper position to admit more ventilation air and remove the additional contaminants. As the space CO_2 level approaches the set point for maximum design ventilation level condition, the outside air damper position will reach the maximum ventilation level damper position set point limit. Damper position will be modulated in a directly proportional relationship between these two CO_2 set point limits and their corresponding damper position limits.

In most applications a fixed reference value can be set for the outdoor air quality level, but the control also supports (with optional CEM) the addition of an outdoor air quality sensor that will be compared to the indoor or return IAQ sensor. If an OAQ (outdoor air quality) sensor is connected, the demand set point levels will be adjusted automatically as the outdoor CO_2 levels vary. Also, if the outdoor CO_2 level exceeds a user-configured maximum limit value, then outside air damper position will be limited to the minimum ventilation damper set point value. The control can also receive these signals through the CCN system.

The IAQ and OAQ measurement levels are displayed by the *Comfort*Link scrolling marquee in parts per million (ppm).

Fire and smoke controls interface

The unit can be equipped with an optional return air smoke detector. The smoke detector is wired to stop the unit and send a message to a remote alarm system if a fault condition is detected. If the controls expansion module (CEM) is added, the control will support smoke control modes including evacuation, smoke purge, and pressurization.

Demand limiting

The control supports demand limiting using one or two fixed capacity limits initiated by discrete input switches or a variable capacity limit function based on an analog input signal. On CCN systems this can be done through the network, or for non-CCN network jobs this can be done by adding the controls expansion module.

Diagnostics

The *Comfort*Link controls have fully integrated all controls and sensors into a common control system. The control monitors these inputs as well as many of the routines to provide advanced diagnostics and prognostics. These include adaptive logic to allow the unit to continue to operate in a reduced output mode and automatic resets where applicable. The last 10 alarms and alerts are stored in memory and can be accessed through the display. The alarms can also be monitored through the Carrier Comfort Network® connection or building automation system. The unit also supports the use of the hand-held Navigator™ display which can be plugged in at the main control box and auxiliary control box at the opposite end of the unit.

Some of the diagnostics that are included are:

- Monitoring of all sensors
- Suction pressure transducers to provide compressor protection and coil freeze protection
- Monitoring of the economizer actuator via digital communication
- Monitoring of compressor status using compressor protection boards
- Adaptive logic for low supply-air temperatures
- Compressor lockout at low ambient conditions
- Storage of compressor run hours and starts
- Low refrigerant charge protection
- Compressor reverse rotation protection

Control interface

The *Comfort*Link controller can interface with the i-Vu® Open Control System, a BACnet building automation system, or Carrier Comfort Network® devices. This will allow for the use of all system control programs. These include:

- Network Service Tool
- System Pilot™ device
- Touch Pilot™ device
- i-Vu® Open Interfaces (units with BACnet)
- ComfortView™ software
- Field Assistant (units with BACnet)
- ComfortID™ system

Contact Carrier Controls Marketing for more information.

The control can also provide interface with other energy management systems with the addition of either the BACnet communication option, the MODBUS Carrier translator, or the LonWorks Carrier translator.

Several contact connection points have been provided in the main control box for interface to external controls and for easy third party control. These are summarized in the

Interface Connections table on page 83. External controls use the following interface points:

- Start/Stop (On/Off) — Start/Stop is accomplished with a contact closure between terminals 1 and 3 on TB6.
- Remote Economizer Enable — Enabling and disabling of the economizer can be done by connecting a contact closure to terminals 1 and 2 on TB6. The economizer can be configured for a switch closure changeover for 3-position operation.
- VAV Heating Interlock — Interface with non-linkage terminals can be done through TB5 terminal 1 and 2.
- Remote IAQ Inputs — External IAQ demand inputs can be connected through terminals 6 and 7 on TB5.
- Smoke Detectors Alarm Output — Remote detector alarm outputs can be connected through terminals 8 and 9 on TB5.
- Fire Shutdown — A remote fire shutdown signal can be connected to 10 and 11 on TB5. The software can be configured to shut unit down on an open or closed signal.
- Fire Pressurization — For remote control of pressurization, a contact closer can be connected to terminals 12 and 13 on TB5. In this mode the economizer damper will be fully opened and the supply fan turned on to pressurize the space.
- Fire Evacuation — For this mode a remote contact closure can be connected to terminal 12 and 14 on TB5. For remote evacuation of a space the outside-air dampers will be opened and the power exhaust fans turned on to evacuate the space of smoke.
- Fire Purge — For this mode external contacts can be connected to terminals 12 and 15 on TB5. In this mode the supply fan and return fans will be turned on with the economizer at a full open position.
- Demand Limiting — For demand limiting the controls expansion module (CEM) must be used. Connections are provided on TB6 for switch input demand limiting and for 4 to 20 mA demand limit signals.
- Dehumidification — A discrete input is available on TB6 to initiate the Dehumidification mode. This input is shared with one of the demand limiting inputs and requires the controls expansion module.
- Remote Supply Air Set Point — A remote supply air temperature set point can be supported when the controls expansion module is used. It can be connected to terminals 9 and 10 on TB6.
- Outdoor Air IAQ Signal — If an external outdoor air signal is being used then it can be connected to terminals 11 and 12 on TB6.
- IAQ Switch Input — If an external control will be controlling IAQ then it can be connected as a contact closure through terminals 13 and 14 on TB6.

Carrier can also support electronic interface to other systems using the following;

- MODBUS Carrier translator (read/write, provides CCN to MODBUS remote terminal unit [RTU] protocol conversion)
- LonWorks Carrier translator (read/write, provides CCN to LON FT-10A ANSI/EIA-709.1 protocol conversion)

Constant volume/staged volume applications

The 48/50A2,A4,A6,A8 units are designed to operate in CV/SAV applications. The units are shipped as operable, stand-alone units using either a standard (mechanical or electronic) 2-stage heat or 2-stage cool thermostat, or with a field-installed space temperature sensor.

With a standard thermostat (programmable is optional), heating and cooling operation is based on the active inputs from the thermostat and the unit occupancy.

With a space temperature sensor, heating and cooling operation is based on the space temperature sensor reading, the occupancy status of the equipment, and the occupied/unoccupied cooling and heating set points.

Supply air can be supplied at a constant volume, static pressure control, or at a staged air volume (SAV) corresponding to two configurable speeds for cooling and one configurable speed for heating. SAV can also be configured to optimize fan speed for latent capacity or sensible capacity during cooling operation.

Features with thermostat control of unit:

- Thermostatic inputs for two stage heat/cool thermostat or DDC control
- Occupied and unoccupied cooling and heating control
- High cool/low cool supply air temperature control from Y1 and Y2 inputs
- Adaptive cooling with multiple scroll compressors, hot gas bypass, or variable capacity scroll compressor
- Control of unit using Y1, Y2, W1, W2, and G thermostat
- High heat/low heat control from W1 and W2 inputs and staged heat option
- Heating supply air temperature control from W1 input and multi-staged heat
- Tempering operation during ventilation or cooling modes with multi-staged heat
- Ventilation mode control from G input
- Constant volume, staged air volume, or supply duct static pressure control of supply fan
- Staged power exhaust or modulated power exhaust control based on building pressure
- Modulated outdoor air damper operation for ventilation or indoor air quality control with economizer
- Discrete input for dehumidification control with Humidi-MiZer and CEM
- Remote occupancy switch control

Features with sensor control of unit:

- There are multiple sensor options, including:
  - T55 sensor will monitor room temperature and provide unoccupied override capability (1 to 4 hours).
  - T56 sensor will monitor room temperature, provide unoccupied override capability (1 to 4 hours), and provide a temperature offset of 5°F maximum.
  - Carrier ZS communicating sensor (units with BACnet) are configurable to monitor space temperature, relative humidity, or CO_2. The Equipment Touch is also capable of acting as a space temperature and relative humidity sensor.
- Network space temperature sensor

Interface Connections

TB-3 — CCN COMMUNICATIONS (HY84HA096)		
TB3	1	LEN +
	2	LEN C
	3	LEN –
	4	24 VAC
	5	CCN +
	6	CCN C
	7	CCN –
	8	Grd
TB-4 — THERMOSTAT CONNECTIONS (HY84HA090)		
TB4	1	Thermostat R
	2	Thermostat Y1
	3	Thermostat Y2
	4	Thermostat W1
	5	Thermostat W2
	6	Thermostat G
	7	Thermostat C
	8	Thermostat X
TB-5 — FIELD CONNECTIONS (HY84HA101)		
TB5	1	VAV Heater Interlock Relay, Ground
	2	VAV Heater Interlock Relay, 24 VAC
	3	T55/T56 10K Thermistor
	4	T55/T56 10K Thermistor
	5	T56 Set Point Adjustment (100,000 ohm)
	6	Indoor Air IAQ Remote Sensor/Remote Pot/Remote 4-20 mA
	7	Indoor Air IAQ Remote Sensor/Remote Pot/Remote 4-20 mA
	8	Smoke Detector Remote Alarm
	9	Smoke Detector Remote Alarm
	10	Fire Shutdown
	11	Fire Shutdown
	12	Fire Control Common[a]
	13	Fire Pressurization[a]
	14	Fire Evacuation[a]
	15	Fire Smoke Purge[a]
	16	Not Used
TB-6 — FIELD CONNECTIONS (HY84HA101)		
TB6	1	Remote Occupied/Economizer Enable 24 VAC
	2	Remote Occupied Contact
	3	Remote Economizer Contact
	4	Demand Limit Contacts Common[a]
	5	Demand Limit Switch 1[a]
	6	Demand Limit Switch 2/Dehumidify Switch[a]
	7	Demand Limit 4-20 mA[a]
	8	Demand Limit 4-20 mA[a]
	9	Remote Supply Air Set Point 4-20 mA[a]
	10	Remote Supply Air Set Point 4-20 mA[a]
	11	Outdoor Air IAQ 4-20 mA[a]
	12	Outdoor Air IAQ 4-20 mA[a]
	13	IAQ Remote Switch Common[a]
	14	IAQ Remote Switch[a]
	15	Supply Fan Status Switch[a]
	16	Supply Fan Status Switch[a]

NOTE(S):
a. Optional controls expansion module (CEM) is required.

- Occupied and unoccupied cooling and heating with adjustable set points
- High cool/low cool supply air temperature control with adjustable set points
- Adaptive cooling with multiple scroll compressors, hot gas bypass, or variable capacity scroll compressor
- Modulating, free cooling and integrated free cooling control with economizer
- High heat/low heat control with adjustable set points
- Heating supply air temperature control with multi-staged heat
- Tempering operation during ventilation or cooling modes with multi-staged heat
- Ventilation mode operation when cooling and heating are inactive
- Constant volume, staged air volume, or supply duct static pressure control of supply fan
- Staged power exhaust or modulated power exhaust control based on building pressure
- Modulated outdoor air damper operation for ventilation or indoor air quality control with economizer
- Return air relative humidity sensor for dehumidification control with Humidi-MiZer
- 365-day timeclock with backup (supports minute, hour, and day of week, date, month, and year access). The timeclock includes the following features:
  - Daylight savings time function
  - Occupancy control with 8 periods for unit operation
  - Holiday table containing up to 18 holiday schedules
  - Ability to initiate timed override from T55 or T56 sensors (for a timed period of 1 to 4 hours)
  - Temperature-compensated start to calculate early start times before occupancy
  - For units connected into a CCN network, the timeclock can be integrated into the overall building energy management system and be updated remotely
- For units connected to the CCN network or BACnet network (with BACnet option) the user can also display unit information including I/O values Maintenance, Configuration, Service, and Set Point data tables and can adjust some set points and settings.

Variable air volume (VAV) applications

The 48/50A3,A5,A7,A9 units are designed to operate in multi-zone VAV applications. All VAV units include a variable frequency drive to modulate the supply fan speed based on a supply duct static pressure set point and continuous fan operation in occupied mode. Cooling and heating modes are enabled based on return air temperature and mode operation is to a supply air temperature set point (cooling or with multi-staged heat). Some of the features for VAV units in a stand-alone application are:

- The units are shipped as operable, stand-alone units with the addition of a field-supplied timeclock to establish unit start and stop times or they can use *Comfort*Link time of day scheduling routine
- Provides cooling and heating control (if equipped with heat) in both occupied and unoccupied modes
- Supports an optional space temperature sensor for unoccupied mode control and supply air temperature reset
- If space sensor is equipped with an override feature, the sensor will allow operation during the unoccupied period for a fixed length of time
- Base unit control supports a heat interlock relay (field supplied) to signal the VAV terminal devices to fully open during heating operation

- Control board diagnostics
- Control of modulating economizer for free cooling
- Control to maximize the use of outside air cooling to reduce part load operating costs
- Support of remote occupied/unoccupied input to start
- Controls the operation of the supply fan inverter to maintain a configurable supply duct static pressure set point. Inverter is configured and controlled directly by *Comfort*Link controls
- Support of IAQ sensor
- Support a field test for field check out
- Support linkage to ComfortID™ systems
- Cooling capacity control of up to 5 stages plus economizer
- Control of heat to maintain return-air temperature
- Control of heat interlock relay
- Compressor time delays to prevent rapid cycling of compressors
- Automatic lead-lag control of compressors to reduce the number of compressor cycles
- With the addition of a remote start/stop switch, heating or cooling is enabled during unoccupied periods as required to maintain space temperature to within unoccupied set points
- With the addition of the controls expansion board, the *Comfort*Link controls will also support demand limiting and remote set point control

When the unit is connected to a CCN (Carrier Comfort Network®) system or i-Vu Open system (with BACnet option), additional features can be used:

- Interface of the unit clock with the CCN network clock and allow for remote configuration of the schedules
- CCN or i-Vu Open demand limit participation
- Airside Linkage operation with Carrier CCN or Carrier i-Vu Open VAV or VVT zone controllers.

Sequence of operation

Cooling, constant volume (CV)/staged air volume (SAV) units

On power up, the initialization software will determine the unit configuration and also initialize any controls loops and input/output devices. All alarms and configurations are saved in memory and maintained during power outages. All alarms will be maintained in memory and must be cleared through the display.

On SAV units equipped with a supply fan VFD, the fan is controlled at discrete speeds based on the operation mode of the unit and the SAV configuration.

For units configured to optimize SAV for dehumidification, the supply fan will operate in low speed when:

- Cooling capacity is less than 60% and SAT is below SST
- Unit is in vent mode
- Heating capacity is less than 75%

For units configured to optimize SAV for dehumidification, the supply fan will operate in high speed when:

- Cooling capacity is less than 60% and SAT is near SST
- Cooling capacity is greater than 60%
- Heating capacity is greater than 75%

For units configured to optimize SAV for sensible control (SAV dehum disabled), the supply fan will operate in low speed when:

- Unit is in low cool mode
- Unit is in vent mode
- Heating capacity is less than 75%

For units configured to optimize SAV for sensible control (SAV dehum disabled), the supply fan will operate in high speed when:

- Unit is in high cool mode
- Heating capacity is greater than 75%

Constant volume/staged air volume conventional thermostat control

If the unit is equipped with a conventional thermostat with Y1, Y2, W1, W2, and G connections, then the control will perform the following sequence.

When G is closed the indoor fan will turn on. G must be closed for heating or cooling to occur.

If Y1 is closed, then the control will first check the ability to use the economizer. If the economizer can be used, the control will modulate the damper open to maintain the low load economizer leaving air temperature set point.

If Y2 closes, then the control will lower the leaving air temperature set point to the configured set point. If the economizer cannot satisfy the load, then compressors will be sequenced on to maintain either the low or high load temperature set points. If the economizer cannot be used or the enable control disables the economizer, then the control will sequence the compressors based on the Y1 and Y2 signals.

If two-stage control has been selected, then the control will map the compressors to the Y1 and Y2 inputs as defined in the loading sequence.

If Adaptive mode has been selected, then the control will add and remove compressor stages to maintain the low and high demand leaving air set points. If Y1 is closed, at least one compressor stage will be turned on.

Heating — If W1 closes, then it will indicate that the units should be in the Heating mode. The economizer will be closed to the minimum position, and if the unit is equipped with gas or electric heat then the first stage of heat will be energized. If W2 closes, then the control will turn on the second stage of heat. If the unit is equipped with a staged gas heat control option, then the W1 signal will be used to control the gas heat to the configurable low heat load leaving air temperature set point. When W2 is energized, the unit will fire all stages of heat capacity. If the unit is equipped with gas heat, then the IGC board will control the operation of the gas heat. See the 48 Series Gas Heat units section for the IGC board sequence of operation.

Constant volume/staged air volume space temperature sensor control

If the space temperature operation has been selected using a T55, T56, or ZS sensor, then the following logic will be used to control the operation of the unit. If a space temperature is used, then a wire jumper must be added between R, W1, and W2. If a remote occupancy control method has been selected, then the input must first be closed for the unit to go into Heat, Vent or Cooling mode.

If the internal timeclock is used, the control module determines the occupancy state based on the system time schedules.

If Temperature Compensated Start is active, the unit will be controlled as in the occupied mode and will start a time as determined by prior operation to have the space at set point by the occupied time.

If the unit has been configured for a preoccupancy purge, then the control will start the unit in Vent mode prior to the occupancy time to vent the space. If an IAQ sensor is being used and the low IAQ set point is satisfied, then the occupancy purge mode will be terminated. The set points for heat and cooling are configurable through the display. If a T56 sensor is being used, then the set point can be shifted by as much as 5 degrees.

Cooling — If the space temperature goes above the cooling set point, then the unit will go into Cooling mode. If the economizer can be used, the control will first try to control to the leaving air temperature set point. The set point will depend on the space temperature. If the temperature is above the low demand set point, then the low economizer load discharge air temperature set point will be used. If the temperature is above the high load space temperature set point, then the high load leaving air temperature set point will be used. If the economizer cannot satisfy the load, then compressors will be sequenced on to maintain either the low or high load temperature set points.

If the economizer cannot be used or the enable control disables the economizer, then the control will sequence the compressors based on the low and high load space temperature variables. If two-stage control has been selected, then the control will map the compressors to the low and high loads as defined in the loading sequence. If Adaptive mode has been selected, then the control will add and remove compressor stages to maintain the high and low demand leaving air set points.

Heating — If the space temperature goes below the heating space temperature set points, then it will indicate that the units should be in the Heating mode. The economizer will be closed to the minimum position and if the unit is equipped with gas or electric heat then the first stage of heat will be energized. If the space temperature goes below the high load space temperature set point, then the control will turn on the second stage of heat. If the unit is equipped with a staged gas heat control option, then the low load demand signal will turn on heating stages to maintain the leaving air temperature set point. A high demand signal will energize all stages of heat.

Unoccupied Mode — If the unit is configured for unoccupied free cooling, mechanical cooling, or heating, and the temperature goes beyond the unoccupied configuration set points, then the control will turn on free cooling, mechanical cooling, or heat as needed to get within the unoccupied set points. When in this mode, the economizer dampers will be maintained fully closed or to the minimum unoccupied ventilation set point.

Variable air volume control

On power up, the initialization software will determine the unit configuration and also initialize any controls loops and input/output devices. All alarms and configurations are saved in memory and maintained during power outages. All alarms will be maintained in memory and must be cleared through the display.

The unit will first determine the mode of operation. If the unit has been configured for space temperature demand, then the control will determine, based on the configurable set points, if the unit should be in heat mode, vent mode, or cooling mode. If the unit is configured for return air temperature control, then it will start the fan and monitor the return air temperature vs. the configurable set point to determine if the unit should be in cooling, vent, or heating mode.

If the control is connected to a ComfortID™ system, the room terminals are equipped with microprocessor controls that give commands to the base module. If linkage is active, the control module will replace local *Comfort*Link set points and occupancy data with linkage-supplied data.

If temperature compensated start is active, then advance pre-cool or heat of the space is enabled. If the unit is configured to use a pre-purge cycle, then the *Comfort*Link controls will start the unit in Vent mode based on a pre-start time interval. If an IAQ sensor is being used and the low IAQ control point is satisfied, then the mode will be terminated.

Cooling — If Cooling mode is required, then the controlling set point will be the leaving air temperature set point. If an economizer is present and the changeover control allows the economizer to be used, then it will first attempt to control the leaving-air temperature using free cooling. If this cannot satisfy the load, then additional compressor stages will be turned on to maintain the leaving-air temperature. When both compressors and economizers are being used, the control will use the economizer dampers to maintain better control of the leaving air and to help prevent high compressor cycling. If the economizer cannot be used, then it will be set to the minimum vent position. When using compressors, the leaving-air temperature will sequence to compressors on and off using a PID control loop.

If the unit is equipped with an optional hot gas bypass valve, the control will use the hot gas as an additional stage of capacity. When the first stage of cooling is required the control will turn on a circuit "A" compressor and the hot gas bypass valve. When additional cooling is called for it will turn off the hot gas bypass valve. The valve will also be used for additional freeze protection of the coils when low evaporator refrigerant temperatures are detected using the suction pressure transducers.

When operating in cooling mode, the control will also monitor the supply duct pressure and send a 4 to 20 mA signal to the factory-supplied inverter to control the speed of the fan and the delivered cfm. If on a linkage system, the control will also support static pressure reset based on the needs of the zones.

Heating — If the unit has been enabled for occupied heat and the space temperature sensor (SPT), return air temperature sensor (RAT), or linkage demand calls for heat, the control will energize the electric heat or gas heat (if present) to warm the space. In this mode the control will energize the heat interlock relay which will signal the terminals to open to the heating position. Note that for the linkage systems the interlock relay connection is not required. Once the Heat mode is enabled, the heat capacity will be controlled by the return air temperature set point. Heating will continue until the return temperature set point is satisfied. If the unit is configured for morning warm-up and the heating demand is below the set point during the first 10 minutes of operation, the control will energize full heating capacity until the return air temperature set point is satisfied.

If the space temperature sensor (SPT), return air temperature sensor (RAT), or linkage demand requires that the unit be in heating, then the control will energize the electric heat or gas heat (if present) to warm the space. In this mode the control will energize the heat interlock relay which should be connected to the terminals to indicate that they should open to the heating position. The interlock relay connection is not required for the linkage systems. Heating will continue until the mode selection sensor is satisfied.

Dehumidification mode

A Dehumidification mode can be initiated by either a discrete input on TB6 or by a direct measurement of humidity levels with an optional space or return air humidity sensor. When the Dehumidification mode is active, the evaporator coil leaving air temperature will be controlled to the Dehumidify Cool set point, which is typically colder than the normal cool mode leaving air set points.

In this mode, comfort condition set points, which are based on dry bulb temperature, will be overridden. If a source of reheat is available, then the leaving-air temperature can be raised to a more desirable temperature. Available methods of reheat are internal gas heat if the unit is equipped with the staged gas heating option or an external heat source that can be controlled by an auxiliary alarm relay switch.

Humidi-MiZer operation

The design of the Humidi-MiZer adaptive dehumidification system allows for two humidity control modes of operation of the rooftop unit, utilizing a common subcooling/reheat dehumidification coil located downstream of the standard evaporator coil.

This unique and innovative design provides the capability for the rooftop unit to operate in both a subcooling mode and a hot gas reheat mode for maximum system flexibility. The Humidi-MiZer package is factory installed and will operate whenever there is a dehumidification requirement.

The Humidi-MiZer system is initiated based on input from a factory-installed return air humidity sensor to the large rooftop unit controller. Additionally, the unit controller may receive an input from a field-installed space humidity sensor, a discrete input from a mechanical humidistat, or input from a third-party controller.

A unit equipped with a Humidi-MiZer system can operate in the following modes:

Conventional Cooling mode

Conventional operation of the A series large rooftop unit allows the unit to cycle up to six compressors to maintain comfort conditions, with expanded cycling operation offered by the optional digital compressor. This mode is the conventional DX (direct expansion) cooling method used on Carrier's standard large rooftops and provides equivalent capacity to a non-Humid-MiZer equipped unit. It is used when there is a call for cooling only, such as at design AHRI (Air-Conditioning, Heating, and Refrigeration Institute) cooling conditions of 95°F ambient and 80°F/67°F db/wb entering air conditions. The SHR (sensible heat ratio) for equipment in this scenario is typically 0.7 or higher.

Subcooling mode

This modulating mode will operate to satisfy part load type conditions when there is a space call for cooling and dehumidification. Although the temperature (sensible) may have dropped and decreased the sensible load in the space, the outdoor and/or space humidity levels may have risen.

A typical scenario might be when the outside air is 85°F and 70 to 80% relative humidity (RH). Desired SHR for equipment in this scenario is typically 0.4 to 0.7. Carrier's A Series Humidi-MiZer adaptive dehumidification system will increase subcooling entering the evaporator and cycle on enough compressors to meet the latent load requirement, while simultaneously adjusting refrigerant flow to the Humidi-MiZer coil to reheat the air to the required supply air set point. This will allow the unit to provide variable SHR to meet space requirements.

Conversely, a standard unit might overcool the space or stage down to meet set point, sacrificing latent capacity control. The Humidi-MiZer unit will initiate subcooling mode when the space temperature and humidity are both above the temperature and humidity set points, and attempt to meet both requirements. Once the humidity requirement is met, the unit can continue to operate in normal cooling mode to meet any remaining sensible capacity load. Alternatively, if the sensible load is met and humidity levels remain high, the unit can switch to Hot Gas Reheat mode to provide neutral, dehumidified air.

Hot Gas Reheat mode

This modulating mode is used when dehumidification is required without a need for cooling, such as when the outside air is at a neutral temperature (70 to 75°F) but high humidity exists. This situation requires the equipment to operate at a SHR of 0.0 to 0.2.

With no cooling requirement and a call for dehumidification, the A Series Humidi-MiZer adaptive dehumidification system will cycle on enough compressors to meet the latent load requirement, while simultaneously modulating refrigerant flow to the Humidi-MiZer coil to reheat the air to the desired neutral air set point.

The A-Series Humid-MiZer system controls allow for the discharge air to be reheated either to the return-air temperature minus a configurable offset or to a configurable Reheat set point (default 70°F). The Hot Gas Reheat mode will be initiated when only the humidity is above the humidity set point, without a demand for cooling.

Mode control

The essential difference between the Subcooling mode and the Hot Gas Reheat mode is in the supply air set point. In Subcooling mode, the supply air set point is the temperature required to provide cooling to the space. In Reheat mode, the supply air set point is the temperature required to provide neutral air to the space. In both cases, the unit will decrease the evaporator discharge temperature to meet the latent load and reheat the air to the required cooling or reheat set point (i.e., 50, 60, 70°F, etc.).

48 series gas heat units

The gas heat units incorporate 2 (3 on size 060) separate systems to provide gas heat. Each system incorporates its own induced-draft motor, integrated gas control (IGC) board, 2-stage gas valve, manifold, and safeties. For 2-stage heat control, the systems are operated in parallel. For example, when there is a call for first stage heat, both induced-draft motors operate, both gas valves are energized, and both IGC boards initiate spark.

With the staged gas control, the systems are operated independently to allow for a greater range of capacity control. All of the gas heating control is performed through the IGC boards (located in the heating section). The MBB module board serves only to initiate and terminate heating operation and monitor the status of the requirements for indoor fan operation.

The fan will be controlled directly by the MBB board. The base module board is powered by 24 vac. When the thermostat or room sensor calls for heating, the MBB board will close heating relays and send power to W on each of the IGC boards.

An LED on the IGC board will be on during normal operation. A check is made to ensure that the roll-out switch and limit switch are closed. If the check was successful, the induced-draft motor is energized, and when its speed is satisfactory, as proven by the flue gas pressure switch, the ignition activation period begins. The burners will ignite within 5 seconds. If the burners do not light, there is a 22 second delay before another 5 second attempt. This sequence is repeated for 15 minutes or until the burners light. If, after the 15 minutes, the burners still have not lit, heating is locked out. To reset the control, break 24-v power to the thermostat.

When ignition occurs, the IGC board will continue to monitor the condition of the rollout and limit switches, the flue gas pressure switch, as well as the flame sensor. If the unit is controlled through a room thermostat set for fan auto, 45 seconds after ignition occurs the indoor-fan motor will be energized and the outdoor-air dampers will open to their minimum position.

If the overtemperature limit opens prior to the start of the indoor fan blower, on the next attempt the 45-second delay will be shortened to 5 seconds less than the time from initiation of heat to when the limit tripped. Gas will not be interrupted to the burners and heating will continue. Once modified, the fan on delay will not change back to 45 seconds unless power is reset to the control.

If the unit is controlled through a room sensor, the indoor fan will be operating in the occupied mode and the outdoor-air dampers will be in the minimum position. If the unit is controlled with a room sensor in the unoccupied mode, the indoor fan will be energized through the IGC board with a 45-second delay and the outside-air dampers will move to the minimum unoccupied set point.

When additional heat is required, the second stage MBB output relay closes and initiates power to the second stage of all main gas valves in all sections. When the demand is satisfied, MBB heat output relays will open and the gas valves close, interrupting the flow of gas to the main burners. If the call for stage 1 heat lasts less than 1 minute, the heating cycle will not terminate until 1 minute after W1 became active. If the unit is configured for intermittent fan, the indoor-fan motor will continue to operate for an additional 45 seconds, then stop, and the outdoor-air dampers will close. If the overtemperature limit opens after the indoor motor is stopped within 10 minutes of W1 becoming inactive, on the next cycle the time will be extended by 15 seconds. The maximum delay is 3 minutes. Once modified, the fan off delay will not change back to 45 seconds unless power is reset to the control.

Storage

Unit packaging is not designed for long term, outdoor storage. Carrier recommends storing units indoors in a dry, level location. If the units are stored outdoors or are installed prior to building completion, but not started, refer to the unit installation instructions for storage guidance.

NOTE: Special start-up procedures are required for units that have been non-operational (in storage or installed) for more than three (3) months or have been exposed to cold or humidity outside of the recommended storage conditions. Refer to the installation instructions for start-up guidance.

Field connections

Ductwork

Secure vertical discharge ductwork to roof curb. Interior installation may proceed before unit is set in place on roof. For horizontal discharge applications, attach ductwork to unit, or field-supplied flanges can be attached to horizontal discharge openings and all ductwork attached to flanges. Units equipped with electric heat require a 90-degree elbow below the unit supply duct connection.

Unit support

The unique basepan of the 48/50A allows for a wide array of unit support. The base unit is designed for curb mounting using Carrier curbs or third party curbs. The unit can also be mounted on steel supports or slab mounted with vibration pads. The special order double wall bottom option is recommended for installations other than curbs to protect the unit bottom insulation.

Thru-the-curb service connections

Roof curb connections allow field power wires and control wires to enter through the roof curb opening.

Thermostat (CV/SAV only)

Use of a thermistor-type room sensor is recommended on all CCN or BACnet installations. A thermistor-type room sensor or a 2-stage heating/cooling thermostat may be used for all other units.

Heating-to-cooling changeover

All units are automatic changeover from heating to cooling when automatic changeover thermostat and subbase or a thermistor-type room sensor are used.

Airflow

Units are draw-thru on cooling and blow-thru on heating.

Maximum airflow

To minimize the possibility of condensate blow-off from evaporator, airflow through units should not exceed values shown in Cooling Cfm Operating Range table and Cooling Capacities tables.

Minimum airflow

The minimum full load cooling airflow for SAV/CV units is 300 cfm/ton. The minimum part load airflow for SAV/CV units, or VAV units with standard scroll compressor, or units with Humidi-MiZer is 200 cfm/ton. VAV units with variable capacity compressor can operate down to 100 cfm/ton. The minimum airflow can be additionally limited by entering coil conditions and unit configuration. All airflow listings are per nominal unit tonnage.

Ambient cooling temperatures

Minimum ambient cooling operation temperature

All units are equipped with factory economizers to allow free cooling at any outdoor ambient. If mechanical cooling is required, the units are designed to operate at outdoor temperatures down to 32°F. Greenspeed or low ambient control units can operate at outdoor temperatures down to –20°F.

Carrier recommends the installation of field-fabricated wind baffles on all vertically oriented condenser coil surfaces when operating in environments with prevailing winds of more than 5 mph and where temperatures drop below 32°F.

Maximum operating outdoor-air temperature

The maximum operating outdoor-air temperature is 115°F. Some models will operate up to 125°F depending on model and operating conditions.

Heating

High altitude (gas heat units only)

A change to the gas orifice may be required at high altitudes. Refer to Altitude Compensation table on page 9.

Minimum temperature

Minimum allowable temperature of mixed air entering the heat exchanger during half rate (first stage) operation is 50°F. There is no minimum mixture temperature during full-rate operation. Comfort conditioning may be compromised at temperatures below 50°F. Below 50°F entering-air temperature (EAT) both stages of heat are engaged.

Internal unit design

Due to Carrier's internal unit design (draw-thru over the motor), air path, and specially designed motors, the full horsepower listed in the Physical Data table and Motor Limitations table can be used with extreme confidence. Using Carrier motors with the values listed in the Physical Data and Motor Limitations tables will not result in nuisance tripping or premature motor failure. The unit warranty will not be affected.

Electric heat

A field-supplied 90-degree elbow must be installed in the supply ductwork below the unit discharge.

Acoustics

Acoustical considerations

In order to minimize sound transmitted to the space, please conform to the following recommendations:

Location

- Avoid locating the unit above sound-sensitive areas. Instead, locate the unit above restrooms, storage areas, corridors, or other noise-tolerant areas.
- Avoid mounting the unit in the middle of large roof expanses between vertical supports. This will minimize the phenomenon known as roof bounce.
- Install the units close to vertical roof supports (columns or load bearing walls).
- Locate the units at least 25 feet away from critical areas. If this is not possible, the ductwork and ceiling structure should be acoustically treated.

- Consider the use of vibration isolators or an acoustic curb.

Ductwork

- Use flexible connectors between the unit and the supply and return ducts.
- Supply and return air main trunk ducts should be located over hallways and/or public areas.
- Provide trailing edge turning vanes in ductwork elbows and tees to reduce air turbulence.
- Make the ductwork as stiff as possible.
- Use round duct wherever possible because it is less noisy.
- Seal all penetrations around ductwork entering the space.
- Make sure that ceiling and wall contractors do not attach hangers or supports to ductwork.
- Provide as smooth and gradual transition as possible when connecting the rooftop unit discharge to the supply duct.
- If a ceiling plenum return is used, provide a return elbow or tee to eliminate line-of-sight noise to the space. Face the entrance of the return duct away from other adjacent units.

Acoustic insulation

- Provide acoustic interior lining for first 20 feet of supply and return duct or until the first elbow is encountered. The elbow prevents line-of-sight transmission in the supply and return ducts.
- Install a double layer of 2-in. low density quilted fiberglass acoustical pad with a 1/8-in. barium-loaded vinyl facing on top of the roof deck before building insulation and roofing installation occur. Place the material inside the curb and for 4 to 8 ft beyond the unit perimeter, dependent upon unit size (larger units require a wider apron outside the curb). Openings in the pad should only be large enough for the supply and return ducts. An alternate approach is to use two layers of gypsum board with staggered seams in addition to the acoustical pad.

Acoustical Considerations

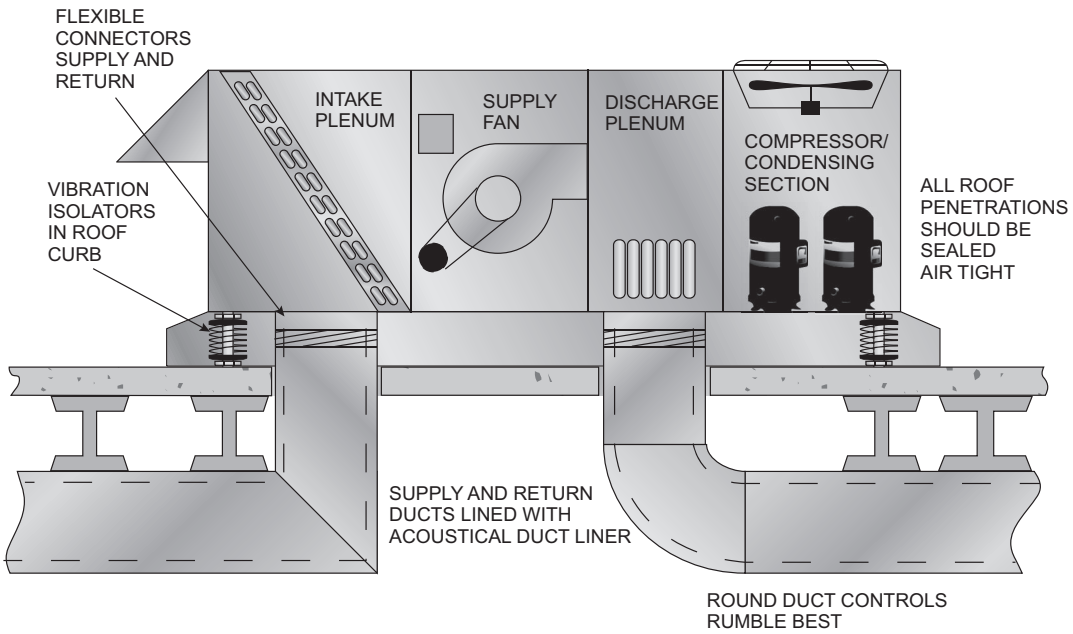

Multiple Unit Application Spacing

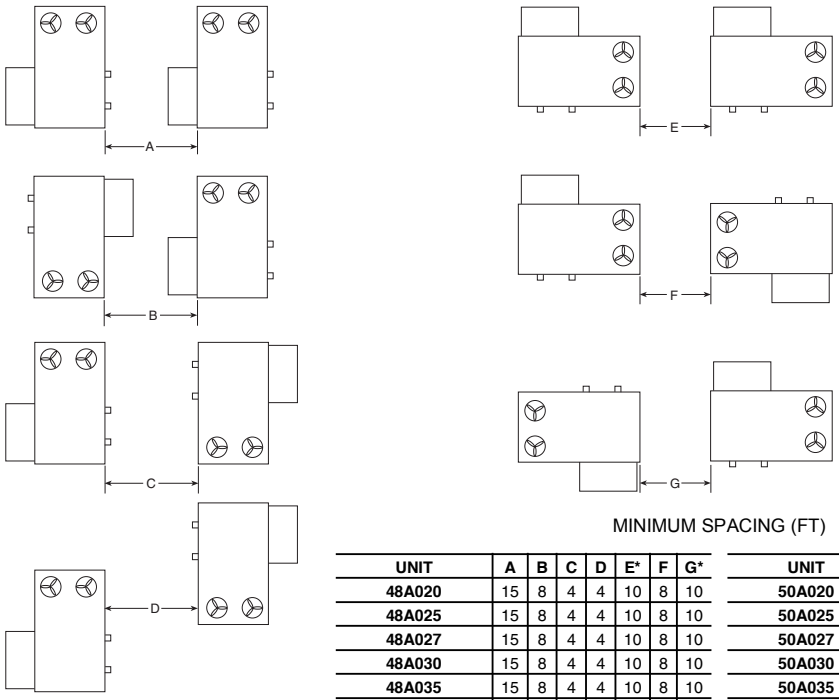

MINIMUM SPACING (FT)

UNIT	A	B	C	D	E*	F	G*
48A020	15	8	4	4	10	8	10
48A025	15	8	4	4	10	8	10
48A027	15	8	4	4	10	8	10
48A030	15	8	4	4	10	8	10
48A035	15	8	4	4	10	8	10
48A040	15	8	4	8	10	4	10
48A050	15	8	4	8	10	4	10
48A060	15	8	4	8	15	4	15

UNIT	A	B	C	D	E*	F	G*
50A020	8	8	4	4	10	8	10
50A025	8	8	4	4	10	8	10
50A027	8	8	4	4	10	8	10
50A030	8	8	4	4	10	8	10
50A035	8	8	4	4	10	8	10
50A040	8	8	4	8	10	4	10
50A050	8	8	4	8	10	4	10
50A060	8	8	4	8	15	4	15

* Required for coil removal. Can reduce to 6 ft if coil removed from top.

Typical Power Schematic (48/50A2,3,4,5 040 Shown)

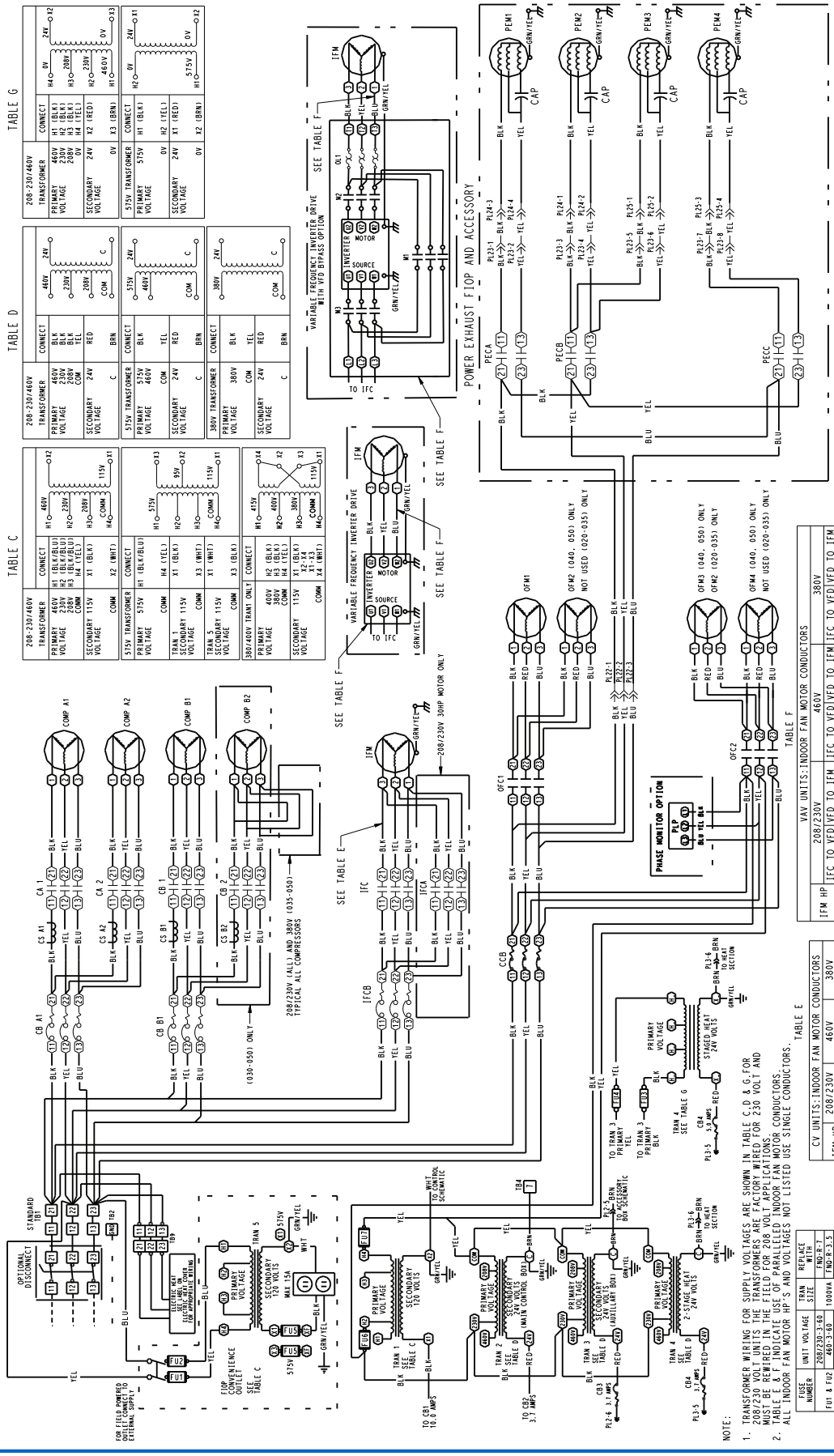

NOTE:

1. TRANSFORMER WIRING FOR SUPPLY VOLTAGES ARE SHOWN IN TABLE C,D & G.FOR 208/230 VOLT UNITS THE TRANSFORMERS ARE FACTORY WIRED FOR 230 VOLT AND MUST BE REWIRED IN THE FIELD FOR 208 VOLT APPLICATIONS.
2. TABLE E & F INDICATE USE OF PARALLELED INDOOR FAN MOTOR CONDUCTORS. ALL INDOOR FAN MOTOR HP'S AND VOLTAGES NOT LISTED USE SINGLE CONDUCTORS.

FUSE NUMBER	UNIT VOLTAGE	TRAN SIZE	REPLACE WITH
FU1 & FU2	208/230-3-60	1000VA	FNQ-R-3.5
	460-3-60		FNQ-R-2.5
	575-3-60		FNQ-R-2.5
FU3 & FU4	208/230-3-60	100VA	FNQ-R-4
	460-3-60		FNQ-R-0.5
	575-3-60		FNQ-R-0.5
FU5	208/230-3-60 (SECONDARY)	1000VA	FNM-12
	460-3-60		FNQ-R-5
	575-3-60		FNQ-R-5
FU6 & FU7	208/230-3-60	750VA	FNQ-R-5
	380-3-60		FNQ-R-4
	460-3-60		FNQ-R-3.5
	575-3-60		FNQ-R-3.5

CV UNITS:INDOOR FAN MOTOR CONDUCTORS

IFM HP	208/230V IFC TO VFD	208/230V VFD TO IFM	460V IFC TO VFD	460V VFD TO IFM	380V IFC TO VFD	380V VFD TO IFM
5	SINGLE	SINGLE	SINGLE	SINGLE	SINGLE	SINGLE
10	SINGLE	SINGLE	SINGLE	SINGLE	SINGLE	SINGLE
15	PARALLEL*	SINGLE	SINGLE	SINGLE	SINGLE	SINGLE
20	PARALLEL	PARALLEL	SINGLE	SINGLE	SINGLE	SINGLE
25	PARALLEL	PARALLEL	SINGLE	SINGLE	PARALLEL	SINGLE
30	PARALLEL	PARALLEL	PARALLEL	PARALLEL	PARALLEL	SINGLE

VAV UNITS:INDOOR FAN MOTOR CONDUCTORS

IFM HP	208/230V IFC TO VFD	208/230V VFD TO IFM	460V IFC TO VFD	460V VFD TO IFM	380V IFC TO VFD	380V VFD TO IFM
5	SINGLE	SINGLE	SINGLE	SINGLE	SINGLE	SINGLE
10	SINGLE	SINGLE	SINGLE	SINGLE	SINGLE	SINGLE
15	PARALLEL*	SINGLE	SINGLE	SINGLE	SINGLE	SINGLE
20	PARALLEL	PARALLEL	SINGLE	SINGLE	SINGLE	SINGLE
25	PARALLEL	PARALLEL	SINGLE	SINGLE	PARALLEL	SINGLE
30	PARALLEL	PARALLEL	PARALLEL	PARALLEL	PARALLEL	SINGLE

* SINGLE FOR 040

Typical Power Schematic for GreenSpeed/Low Ambient Option (48/50A6,A7,A8,A9 040 Shown)

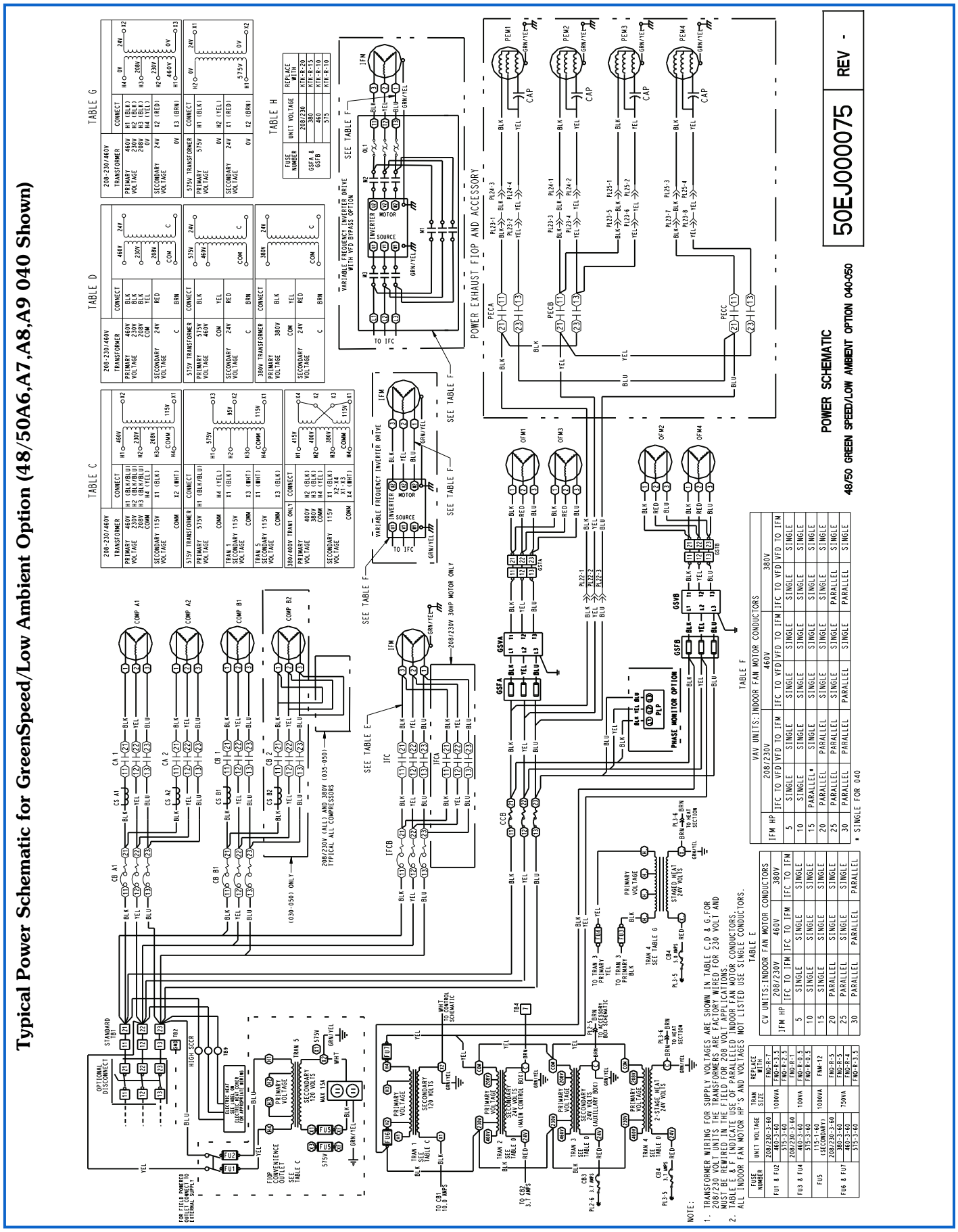

Main Box Control Schematic 48/50A020-060

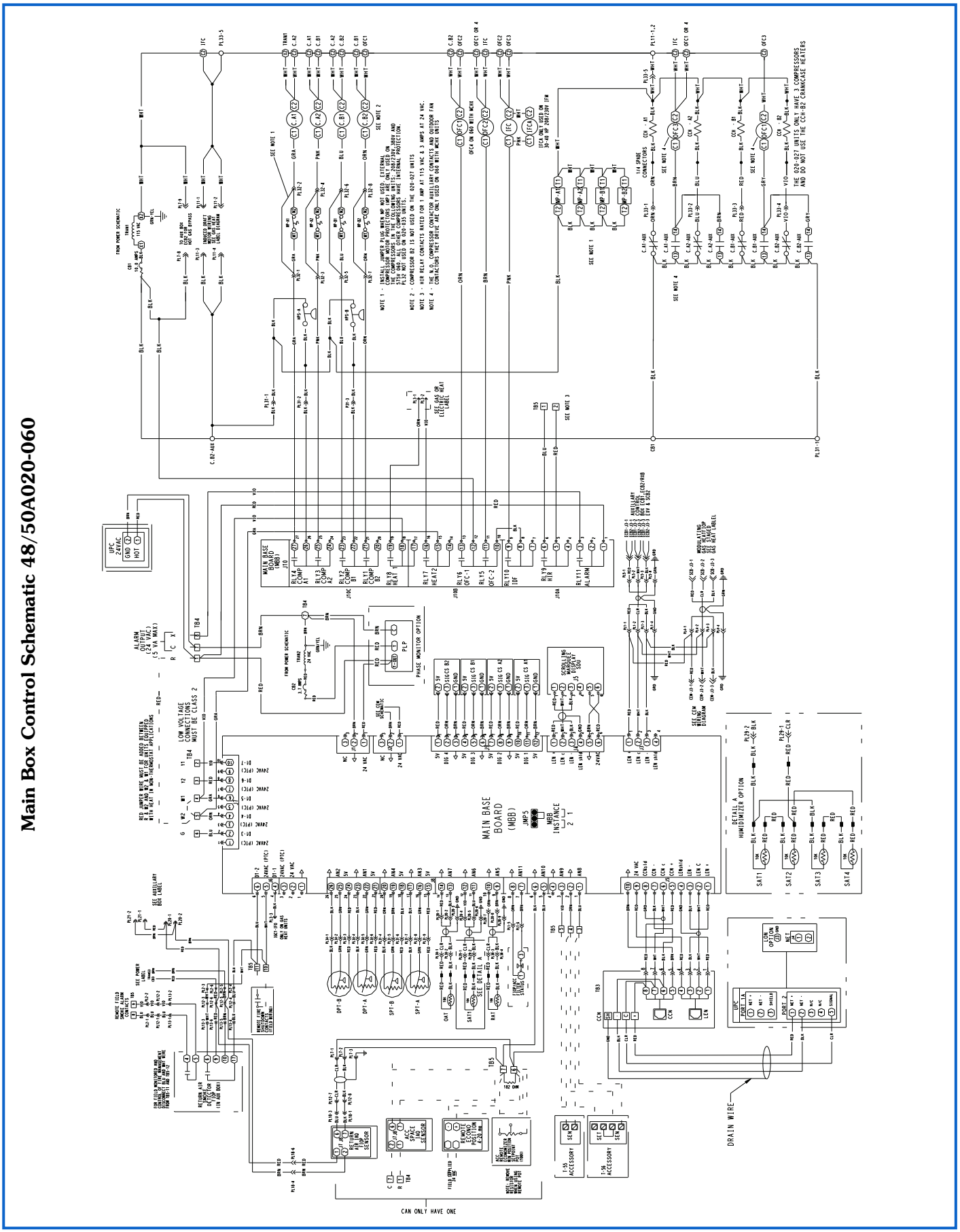

Auxiliary Control Box Schematic 48/50A020-060

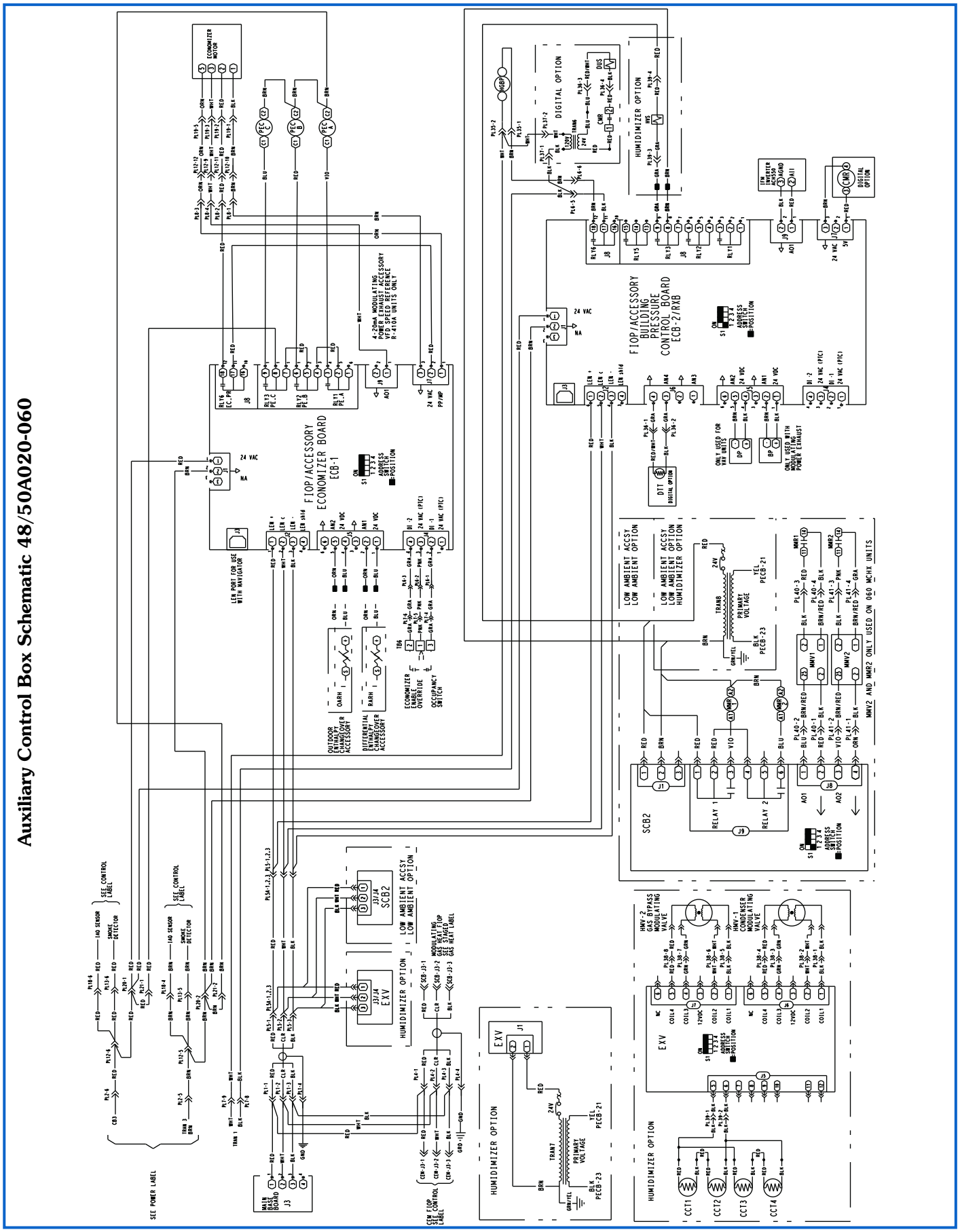

Controls Expansion Module Wiring Schematic 48/50A020-060

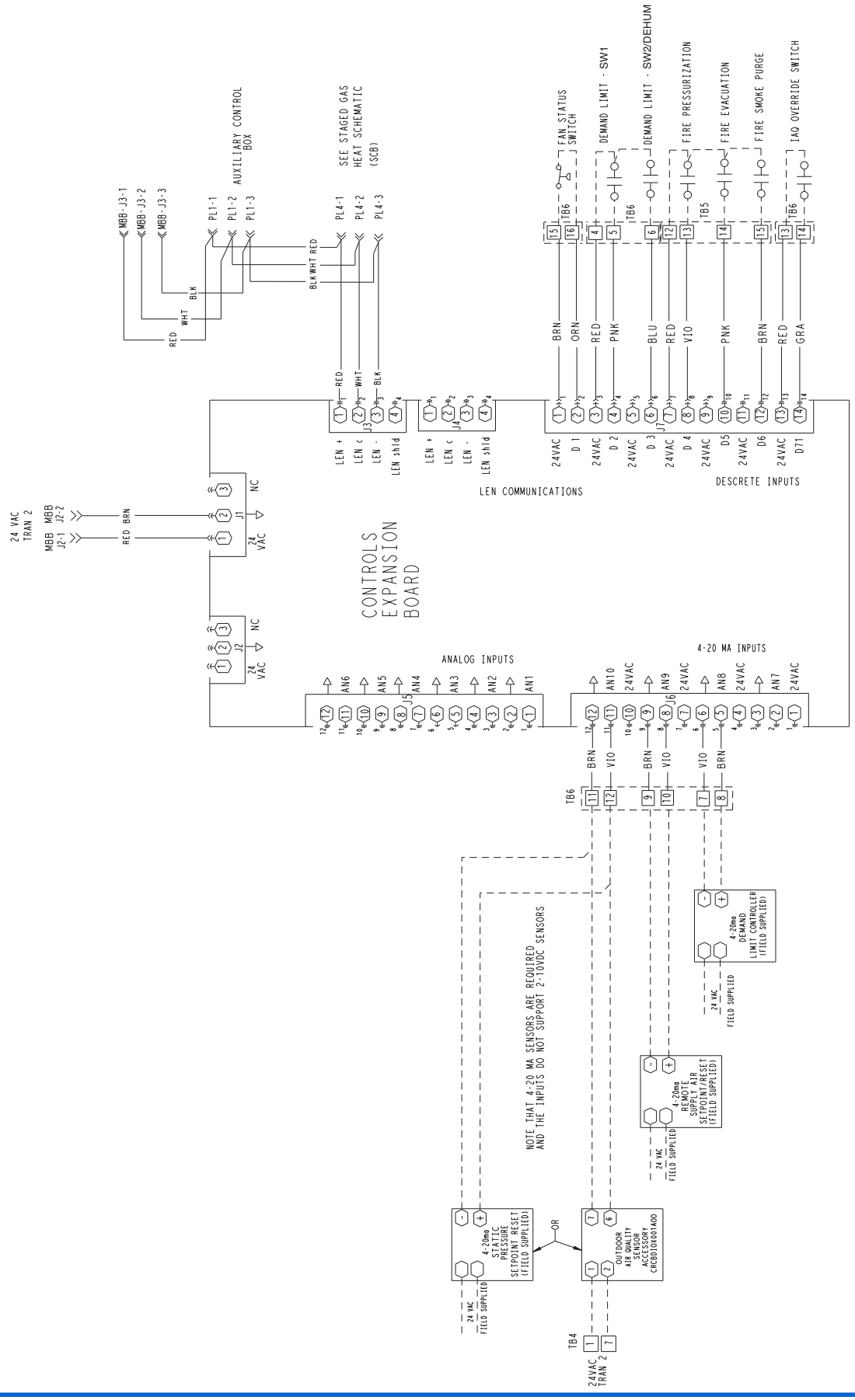

Gas Heat Control Schematic (Two-Stage Heat) 48A2,A3,A6,A7020-060

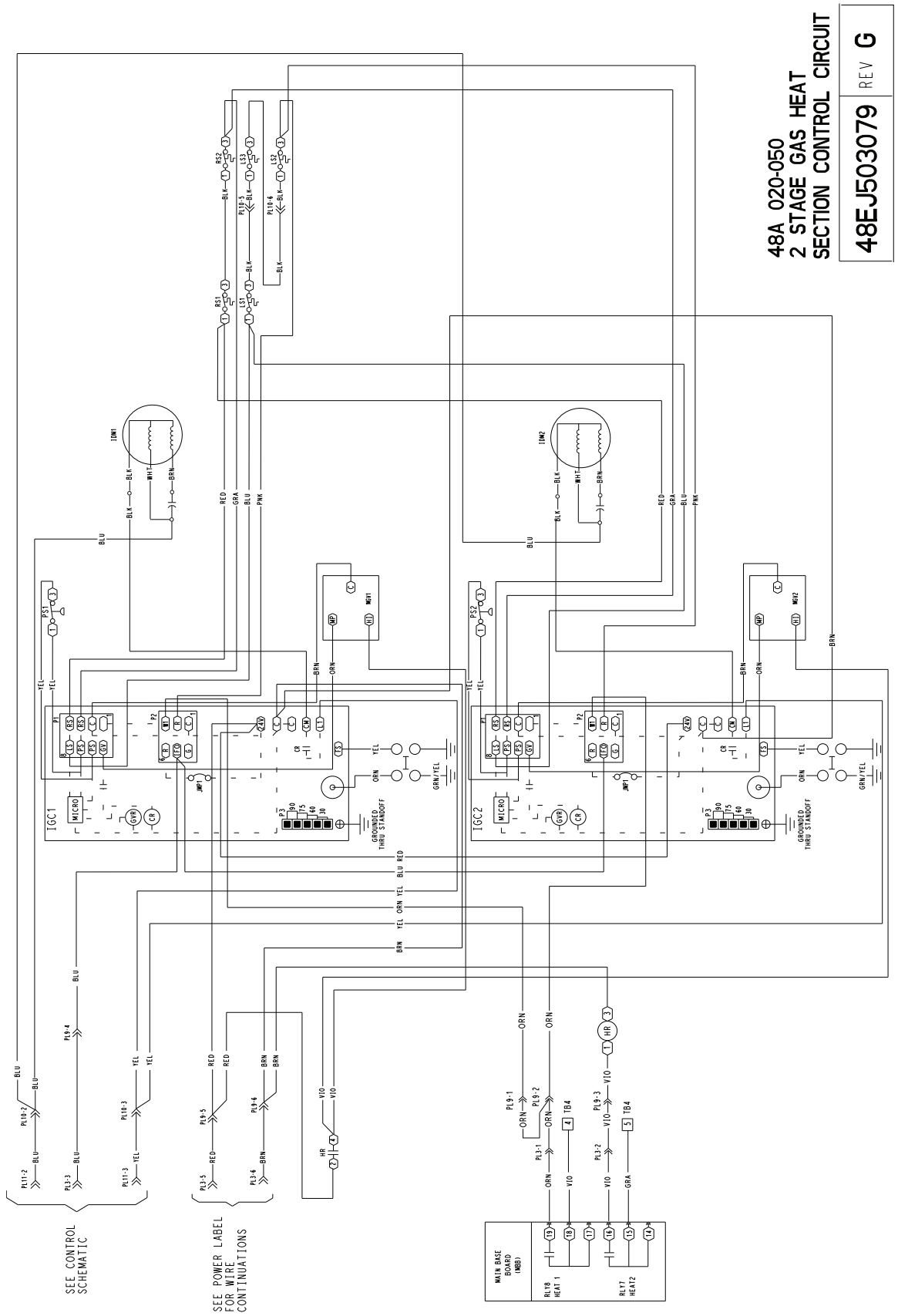

Typical wiring schematics (cont)

Legend for Typical Wiring Schematics

A — Circuit A
AUX — Auxiliary Contact
BP — Building Pressure Transducer
C — Compressor Contactor
CAP — Capacitor
CB — Circuit Breaker
CCB — Control Circuit Breaker
CCH — Crankcase Heater
CCN — Carrier Comfort Network®
CCT — Cooling Coil Thermistor
CEM — Controls Expansion Module
CMR — Compressor Modulation Relay
COMP — Compressor
CS — Compressor Current Sensor Board
DP — Discharge Pressure Transducer
DPT — Discharge Pressure Transducer
DTT — Digital Scroll Discharge Temperature Thermistor
DUS — Digital Unloader Solenoid
ECB-1 — Economizer Control Board
ECB-2 — VAV Control Board
EDT — Evaporator Discharge Temperature
EXV — Expansion Valve Control Board
FIOP — Factory-Installed Option
FS — Flame Sensor
FU — Fuse
GND — Ground
HGBP — Hot Gas Bypass
HMV — Humidi-MiZer Valve
HPS — High-Pressure Switch
HR — Heat Relay
HVS — Humidi-MiZer Valve Solenoid
IAQ — Indoor Air Quality
IDM — Induced-Draft Motor
IFC — Indoor-Fan Contactor
IFCB — Indoor-Fan Circuit Breaker
IFM — Indoor-Fan Motor
IGC — Integrated Gas Control Board
IP — Internal Compressor Protector
LEN — Local Equipment Network
LS — Limit Switch
MBB — Main Base Board
MGV — Main Gas Valve
OARH — Outdoor Air Relative Humidity
OAT — Outdoor Air Temperature Sensor
OFC — Outdoor-Fan Contactor
OFM — Outdoor-Fan Motor
OL — Overload
PEC — Power Exhaust Contactor
PEM — Power Exhaust Motor
PL — Plug
PLP — Phase Loss Protection
PS — Flue Gas Pressure Switch
PTC — Positive Temperature Coefficient
RARH — Return Air Relative Humidity
RAT — Return Air Temperature Sensor
RS — Rollout Switch
RXB — Rooftop Control Board
SCB — Staged Gas Heat Control Board
SDU — Scrolling Marquee Display
SPT — Suction Pressure Transducer
T-55 — Room Temperature Sensor
T-56 — Room Temperature Sensor with Set Point
TB — Terminal Block
TRANS — Transformer
UPC — Universal Protocol Converter
VAV — Variable Air Volume
VFD — Variable Frequency Drive

THERMOSTAT MARKINGS
BM — Blower Motor
C — Common
CM — Inducer Motor
CS — Centrifugal Switch
G — Fan
IFO — Indoor Fan On
L1 — Line 1
R — Thermostat Power
RT — Power Supply
SS — Speed Sensor
W1 — Thermostat Heat Stage 1
W2 — Thermostat Heat Stage 2
X — Alarm Output
Y1 — Thermostat Cooling Stage 1
Y2 — Thermostat Cooling Stage 2

Terminal (Marked)
Terminal (Unmarked)
Terminal Block
Splice
Factory Wiring
Field Wiring
To indicate common potential only, not to represent wiring.

Applied Packaged Cooling Unit and Applied Packaged Cooling Unit with Gas Heat — Constant Volume or Staged Air Volume Application

HVAC Guide Specifications — Section 48/50A2,A4,A6,A8

Size Range: **20 to 60 Tons, Nominal (Cooling)**

Carrier Model Number: **48A2, 48A4, 48A6, 48A8, 50A2, 50A4, 50A6, 50A8**

Part 1 — General

1.01 SYSTEM DESCRIPTION

Outdoor roof curb or slab mounted, electronically controlled heating and cooling unit utilizing hermetic scroll compressors with crankcase heaters for cooling duty and with optional gas heat or electric heat. Units shall discharge supply and return air vertically or horizontally as shown on contract drawings.

1.02 QUALITY ASSURANCE

A. Unit shall be rated in accordance with AHRI (Air-Conditioning, Heating, and Refrigeration Institute) Standard 340/360, latest edition.

B. Unit shall be designed to conform to ANSI (American National Standards Institute)/ASHRAE 15, ASHRAE 62, and UL (Underwriters Laboratories) Standard 1995.

C. Unit shall be listed by UL and UL Canada as a total package.

D. The 48A2,A4,A6,A8 units shall be designed to conform with ANSI Standard Z21.47 (U.S.A.) / CSA (Canadian Standards Association) Standard 2.3 (Canada), Gas-Fired Central Furnaces.

E. Roof curb shall be designed to NRCA (National Roofing Contractors Association) criteria per Bulletin B-1986.

F. Insulation and adhesive shall meet NFPA (National Fire Protection Association) 90A requirements for flame spread and smoke generation.

G. The management system governing the manufacture of this product is ISO (International Organization for Standardization) 9001:2015 certified.

1.03 DELIVERY, STORAGE AND HANDLING

Unit shall be stored and handled per manufacturer's recommendations noted in the unit installation manual. All exposed coils shall have protective shipping covers.

Part 2 — Products

2.01 EQUIPMENT

A. General:

Factory-assembled, single-piece heating and cooling unit. Contained within the unit enclosure shall be all factory wiring, piping, refrigerant charge (R-410A), operating oil charge, dual refrigerant circuits, microprocessor based control system and associated hardware, and all special features required prior to field start-up.

B. Unit Cabinet:

1. Constructed of galvanized steel, bonderized and precoated with a baked enamel finish.
   a. Top cover shall be 18-gauge sheet metal with 0.75-in. thick, 1.5-lb density, fiberglass insulation.
   b. Access panels and doors shall be 20-gauge sheet metal with 0.5-in. thick, 1.5-lb density, fiberglass insulation.
   c. Corner and center posts shall be 16-gauge galvanized steel.
   d. Basepans in the heating and return air sections shall be 16-gauge galvanized steel.
   e. Basepans in the condenser section shall be 16-gauge galvanized steel.
   f. Compressor rail shall be 12-gauge galvanized steel.
   g. Condensate pan shall be 16-gauge aluminized steel.
   h. Air baffles shall be 18-gauge galvanized steel with 0.5-in. thick, 1.5-lb density, fiberglass insulation.
   i. Base rail shall be 14-gauge galvanized steel.
   j. Fan deck (indoor and outdoor section) shall be 16-gauge galvanized steel.
2. Unit casing shall be capable of withstanding 500-hour salt spray exposure per ASTM (American Society for Testing and Materials) B117 (scribed specimen).
3. Sides shall have person-sized insulated hinged access doors for easy access to the control box and other areas requiring servicing. Each door shall seal against a rubber gasket to help prevent air and water leakage and be equipped to permit ease and safety during servicing.
4. Interior cabinet surfaces shall be sheet metal lined or insulated with flexible fire-retardant material, coated on the air side.
5. Unit shall have a factory-installed sloped condensate drain connection made from an aluminized steel or optional stainless steel.
6. Equipped with lifting lugs to facilitate overhead rigging.
7. Filters shall be accessible through a hinged access panel.

C. Fans:

1. Indoor Evaporator Fans:
   a. Double-width/double-inlet, centrifugal, belt driven, forward-curved type with single outlet discharge.
   b. Fan shaft bearings shall be of the pillow-block type with positive locking collar and lubrication provisions.

c. Statically and dynamically balanced.

d. Evaporator fan shaft bearings shall have a life of 200,000 hours at design operating conditions in accordance with ANSI B3.15.

e. Solid fan shaft construction for size 020-050 units and two-piece solid fan shaft construction on the size 060 unit.

2. Condenser Fans:

a. Fans shall be direct-driven propeller type only, with corrosion-resistant blades riveted to corrosion resistant steel supports for all size 020-050 units and the size 060 unit with optional condenser coil. Size 060 units with the microchannel condenser coil shall have a direct driven, 9-blade airfoil cross section, reinforced polymer construction, and shrouded-axial type fans with inherent corrosion resistance.

b. Fans discharge air vertically upward and are protected by PVC coated steel wire safety guards.

c. Statically and dynamically balanced.

3. Fan Drive for SAV™ (Staged Air Volume) Units:

Staged air volume units shall be equipped with variable frequency drive (VFD) inverter. The VFD shall control motor speed to user-configurable speeds. The high and low fan speeds shall be user configurable between 0 and 100% of 60 Hz. The control shall also include dedicated heating fan speeds. The heating low fan speed shall be configurable between 75% and 100%. The high heating fan speed shall be 100%. The VFD shall be factory mounted, wired, and tested. The variable speed drive shall include the following features.

a. Full digital control with direct control from the unit *Comfort*Link controls.

b. Insulated gate bi-polar transistors (IGBT) used to produce the output pulse width modulated (PWM) waveform, allowing for quiet motor operation.

c. Inverters capable of operation at a frequency of 8 kHz so no acoustic noise shall be produced by the motor.

d. Critical frequency avoidance.

e. Self diagnostics.

f. On-board storage of unit manufacturer's customer user settings, retrievable from the keypad.

g. RS485 communications capability.

h. Electronic thermal overload protection.

i. 5% swinging chokes for harmonic reduction and improved power factor.

j. All printed circuit boards shall be conformal coated.

k. Shall, through ABB, qualify for a 24-month warranty from date of commissioning or 30 months from date of sale, whichever comes first.

D. Compressors:

1. Fully hermetic, scroll type compressors with overload protection and short cycle protection with minimum on and off timers.

2. Factory rubber-in-shear mounted for vibration isolation.

3. Reverse rotation protection capability.

4. Crankcase heaters shall only be activated during compressor off mode.

E. Coils:

1. Standard evaporator coil shall have aluminum plate fins mechanically bonded to seamless internally grooved copper tubes with all joints brazed.

2. Standard condenser coil shall be microchannel design. The coil shall have a series of flat tubes containing a series of multiple, parallel flow microchannels layered between the refrigerant manifolds. Microchannel coils shall consist of a two-pass arrangement. Coil construction shall consist of aluminum alloys for the fins, tubes, and manifolds.

3. Coils shall be leak tested at 150 psig and pressure tested at 650 psig.

4. Optional condenser coil shall have aluminum plate fins mechanically bonded to seamless internally grooved copper tubes with all joints brazed.

5. Optional pre-coated aluminum-fin coils shall have a durable epoxy-phenolic coating to provide protection in mildly corrosive coastal environments. Coating shall be applied to the aluminum fin stock prior to the fin stamping process to create an inert barrier between the aluminum fin and copper tube. Epoxy-phenolic barrier shall minimize galvanic action between dissimilar metals.

6. Copper-fin coils shall be constructed of copper fins mechanically bonded to copper tubes and copper tube sheets. Galvanized steel tube sheets shall not be acceptable. A polymer strip shall prevent coil assembly from contacting the sheet metal coil pan to minimize potential for galvanic corrosion between coil and pan. All copper construction shall provide protection in moderate coastal environments.

7. E-coated coils shall have a flexible epoxy polymer coating uniformly applied to all coil surface areas without material bridging between fins. Coating process shall ensure complete coil encapsulation. Color shall be high gloss black with gloss — 60 deg of 65 to 90% per ASTM D523-89. Uniform dry film thickness from 0.8 to 1.2 mil on all surface areas including fin edges. Superior

hardness characteristics of 2H per ASTM D3363-92A and cross-hatch adhesion of 4B-5B per ASTM D3359-93. Impact resistance shall be up to 160 in./lb (ASTM D2794-93). Humidity and water immersion resistance shall be up to minimum 1000 and 250 hours respectively (ASTM D2247-92 and ASTM D870-92). Corrosion durability shall be confirmed through testing to be no less than 6000 hours salt spray per ASTM B117-90. Coil construction shall be aluminum fins mechanically bonded to copper tubes.

F. Gas Heating Section (48 Series Only):
   1. Induced-draft combustion type with energy-saving direct spark ignition systems and redundant main gas valves.
   2. The heat exchanger shall be of the tubular section type constructed of a minimum of 20-gauge steel coated with a nominal 1.2 mil aluminum-silicone alloy for corrosion resistance. Optional stainless steel heat exchangers shall be available.
   3. Burners shall be of the in-shot type constructed of aluminum coated steel.
   4. All gas piping shall enter the unit cabinet at a single location.
   5. Induced Draft Fans:
      a. Direct-driven, single inlet, forward-curved centrifugal type.
      b. Statically and dynamically balanced.
      c. Made from steel with a corrosion-resistant finish.
   6. High-corrosion areas such as flue gas collection and exhaust areas shall be lined with corrosion resistant material.

G. Refrigerant Components:

   Unit shall be equipped with dual refrigerant circuits, each containing:
   1. Solid core filter drier.
   2. Thermostatic expansion valve.
   3. Fusible plug.

H. Filter Section:

   Standard filter section shall be supplied with 2-in. thick disposable fiberglass filters.

I. Controls and Safeties:
   1. Unit *Comfort*Link Controls:
      a. Scrolling marquee display.
      b. CCN (Carrier Comfort Network®) capable.
      c. Unit control with standard suction pressure and condensing pressure transducers.
      d. Shall provide a minimum 5°F temperature difference between cooling and heating set points to meet ASHRAE 90.1 energy standard.
      e. Shall provide and display a current alarm list and an alarm history list.
      f. Automatic compressor lead/lag control.
      g. Service run test capability.
      h. Shall accept input from a CO_2 sensor (both indoor and outdoor).
      i. Configurable alarm light shall be provided which activates when certain types of alarms occur.
      j. Compressor minimum run time (3 minutes) and minimum off time (3 minutes) are provided.
      k. Service diagnostic mode.
      l. Optional integrated economizer control or two-position self-closing adjustable outside air damper.
      m. Minimum of 3 capacity stages of mechanical capacity control (excluding hot gas bypass) controlled by the following method:

         A control algorithm to maintain either high-cool or low-cool supply air temperature set point. Cooling mode (off, low, or high) to be determined from space temperature sensor or standard 2-stage mechanical thermostat input.
      n. Optional minimum load valve for additional capacity stage.
      o. Unit shall be complete with self-contained low voltage control circuit.
      p. Control of evaporator leaving air temperature through compressor and economizer control.
   2. Safeties:
      a. Unit shall incorporate a solid-state compressor lockout which provides optional reset capability at the space thermostat should any of the following safety devices trip and shut off compressor:
         1) Compressor lockout protection provided for either internal or external overload.
         2) Low-pressure protection.
         3) Freeze protection (evaporator coil).
         4) High-pressure protection (high pressure switch or internal).
         5) Compressor reverse rotation protection.
         6) Loss-of-charge protection.
         7) Welded contactor protection.
      b. Supply-air sensor shall be located in the unit and should be used for economizer control and compressor stage control.
      c. Induced draft heating section (48 Series) shall be provided with the following minimum protections:
         1) High-temperature limit switch.
         2) Induced-draft motor speed sensor.
         3) Flame rollout switch.
         4) Flame proving controls.

5) Redundant gas valve.

J. Operating Characteristics:

1. Unit shall be capable of starting and running at 115°F ambient outdoor temperature per maximum load criteria of AHRI Standard 340/360.
2. Unit with standard controls will operate in cooling down to an outdoor ambient temperature of 32°F.
3. Unit shall be provided with fan time delay to help prevent cold air delivery.

K. Electrical Requirements:

1. All unit power wiring shall enter unit cabinet at a single location.
2. Unit shall have a short circuit current rating (SCCR) of 5 kA.

L. Motors:

1. Compressor motors shall be cooled by refrigerant gas passing through motor windings and shall have either internal line break thermal and current overload protection or external current overload modules with compressor temperature sensors.
2. All condenser-fan motors shall be totally enclosed 3-phase type with permanently lubricated ball bearings, class F insulation and internal, automatic-reset thermal overload protection or manual reset calibrated circuit breakers.
3. All indoor fan and power exhaust motors 5 hp and larger shall meet the minimum efficiency requirements as established by the Energy Independence and Security Act (EISA) of 2007.

M. Special Features:

Certain features are not applicable when the features designated * are specified. For assistance in amending the specifications, contact your local Carrier Sales Office.

1. Variable Capacity Compressor:

   A lead circuit variable capacity compressor shall be available for constant volume, staged air volume, and variable air volume configurations. The *Comfort*Link control system shall be capable of unloading this compressor in an infinite number of steps from 100% of compressor capacity down to 50% of compressor capacity.

2. Humidi-MiZer® Adaptive Dehumidification:

   The Humidi-MiZer dehumidification system shall be factory installed with an e-coated reheat coil and shall provide greater dehumidification of the occupied space by using two modes of dehumidification instead of the normal design cooling mode of the unit:

   a. Subcooling mode shall further subcool the hot liquid refrigerant leaving the condenser coil when both temperature and humidity in the space are not satisfied.
   b. Hot gas reheat mode shall mix a portion of the hot gas from the discharge of the compressor with the hot liquid refrigerant leaving the condenser coil to create a two-phase heat transfer in the system, resulting in a neutral leaving-air temperature.
   c. The system shall be equipped with modulating control valves to provide precise leaving-air temperature control. On-off, cycling type control shall not be acceptable.
   d. Reheat coil shall be e-coated as standard.

3. Integrated Ultra Low Leak Economizer:

   a. Economizer shall meet the requirements of ASHRAE 90.1 (latest revision) and California Energy Commission Title 24.
   b. Economizer shall be furnished and installed complete with recirculated air dampers, outdoor air dampers, and controls.
   c. All dampers shall be ultra-low leakage type with blade and edge seals. Dampers shall be 1A certified and exhibit a maximum leakage rate of 3 cfm per square foot of area at 1 in. wg pressure differential when tested per AMCA (Air Movement and Control Association) Std 511.
   d. Dampers shall continue to operate as intended after 100,000 cycles when tested in accordance with Section 8, UL (Underwriters Laboratories) standard 555S.
   e. Actuator shall have a spring return feature which closes the outdoor air dampers upon a power interruption or unit shutdown. Actuators shall be of the communicating type and capable of internal diagnostics.
   f. Economizer shall be capable of introducing up to 100% outdoor air for ventilation or free cooling.
   g. Economizer outdoor air hoods shall be constructed of pre-painted steel.

4. Barometric Relief Damper Package:

   a. Package shall include damper, seals, hardware, and hoods to relieve excess internal pressure.
   b. Damper shall close due to gravity upon unit shutdown.

5. Power Exhaust:

   Package shall include a multiple exhaust fan (centrifugal style) fan, 1 Hp 208-230, 460 v direct-drive motor, and damper for vertical flow units with economizer to control overpressurization of building. Control shall be through *Comfort*Link controls based on damper position or through an optional building pressure sensor. On size 020-050 units, 4 stages of control shall be available. On size 060 units, 6 stages of control shall be available.

6. Thermostats and Subbases:

   To provide staged heating and cooling in addition to automatic (or manual) changeover and fan control.

7. Electronic Programmable Thermostat:

   Capable of using deluxe full-featured electronic thermostat.

8. Liquefied Propane Conversion Kit (48 Series):

   Kit shall contain all the necessary hardware and instructions to convert a standard natural gas unit for use with liquefied propane gas.

9. Convenience Outlet:

   Shall be factory installed and internally mounted with an externally accessible 115-v, 15 amp. GFI (Ground Fault Interrupter), female receptacle with hinged cover. A step-down transformer and overload protection shall be included so no additional wiring is necessary unless the field-wired outlet has been requested. When applied with a unit-mounted disconnect, the outlet shall be wired to the load side of the disconnect so the outlet will shut off with the disconnect.

10. Non-Fused Disconnect Switch:

    Shall be factory installed, internally mounted, and UL approved. Non-fused switch shall provide unit power shutoff. Shall be accessible from outside the unit and shall provide power-off lockout capability.

11. Electric Heater (50 Series Units Only):

    Electric resistance heaters shall be factory installed, nichrome element type, open wire coils with 0.29 in. inside diameter, insulated with ceramic bushings, and shall include operating and safety controls. Coil ends are staked and welded to terminal screw slots.

12. Hail Guard, Condenser Coil Grille:

    Shall protect the condenser coil from hail, flying debris, and damage by large objects without increasing unit clearances.

13. CO_2 Sensor:

    The CO_2 sensor shall have the ability to monitor CO_2 levels and relay information to the controller. The controller will use CO_2 level information to modulate the economizer and provide demand controlled ventilation. The sensor shall be available as a field-installed or factory-installed return air sensor or a remote space sensor.

14. Return Air Smoke Detector:

    The smoke detector shall send input to the controller to shut down the unit in case smoke is detected. The smoke detector shall be factory installed in the return air section or shall be available as a field-installed accessory.

15. Filter Status:

    The filter status switch shall be a pressure differential switch and will indicate a dirty filter. The switch shall be available as field or factory installed.

16. Humidity Sensor:

    A humidity sensor will allow for outside air enthalpy changeover control using the standard outside air dry bulb sensor and the accessory humidity sensor. When both an outside and return air humidity sensor are used, differential enthalpy changeover can be supported.

17. Two-Position Damper:

    A two-position damper shall admit up to 25% outdoor air during fan operation and shall close when the fan is off. The damper position shall be mechanically adjustable.

18. 4-Inch Filters:

    Optional filter section shall be supplied with 4-in. thick MERV (Minimum Efficiency Reporting Value) 7 pleated fiberglass filters.

19. Control Expansion Module (CEM):

    Shall provide the following additional optional features:

    a. Remote set point
    b. Demand limit control
    c. Remote economizer position
    d. Fire and smoke control override control
    e. Remote sensor monitoring
    f. Fan status switch monitoring

20. Staged Gas Heat (48A2,A4 only):

    The control shall have the option for control of the gas heat to a discharge air temperature by sequencing on the gas cells to provide up to 11 stages of capacity. The control shall be integrated directly into the main unit controls and shall include leaving air temperature sensors to ensure that high temperatures do not occur during the operation of the staged gas heat.

21. Navigator™ Display Module:

    The Navigator display module shall be a portable hand-held display module with a minimum of 4 lines and 20 characters per line, of clear English, Spanish, Portuguese, or French language. Display menus shall provide clear language descriptions of all menu items, operating modes, configuration points, and alarm diagnostics. Reference to factory codes shall not be accepted. An industrial grade coiled extension cord shall allow the display module to be moved around the chiller. Magnets shall hold the display module to any sheet metal panel to allow hands-free operation. Display module shall have NEMA (National Electrical Manufacturers Association) 4x housing suitable for use in outdoor environments. Display shall have back

light and contrast adjustment for easy viewing in bright sunlight or night conditions. The display module shall have raised surface buttons with positive tactile response.

22. BACnet[1] Communication Option:

    Shall provide factory-installed communication capability with a BACnet MS/TP network. Allows integration with i-Vu® Open Control System or a BACnet Building Automation System.

23. Modbus[1] Protocol Translator:

    A controller-based accessory module shall provide CCN to MODBUS Remote Terminal Unit (RTU) protocol conversion.

24. LonWorks[1] Protocol Translator:

    A controller-based accessory module shall provide CCN to LON FT-10A ANSI/EIA-709.1 protocol conversion.

25. Full Perimeter Roof Curbs (Horizontal and Vertical):

    Shall be formed of 14-gauge galvanized steel with wood nailer strip and shall be capable of supporting entire unit weight.

26. Security Grille (48/50A060 Unit with MCHX [microchannel heat exchanger] Only):

    Factory-installed grille shall limit access to compressor and condenser coil area to authorized personnel only.

27. Double Wall Option:

    Unit cabinet shall have double wall construction featuring flexible fire retardant fiberglass insulation sandwiched between pre-painted exterior panels and galvanized steel inner panels.

28. Compressor Sound Blanket:

    Field-installed accessory, consisting of compressor sound blankets which are used to mitigate the level of outdoor sound. Available in both single and tandem arrangements.

29. Low Outdoor Sound Condenser Fans:

    Low sound condenser fan system shall be provided to reduce outdoor sound levels.

30. Low Ambient Control:

    a. This factory-installed option shall regulate outdoor fan motor speeds in response to the saturated condensing temperature of the refrigeration circuits and local ambient conditions.

    b. The control shall be capable of operating the rooftop unit mechanical cooing with outdoor temperature at –20°F.

31. Greenspeed® Intelligence;

    a. This factory-installed option shall regulate outdoor fan motor speeds in response to the saturated condensing temperature of the refrigeration circuits and local ambient conditions.

    b. The control shall be capable of operating the rooftop unit with outdoor temperature at –20°F.

    c. Fans shall be direct-driven shrouded-axial propeller type fans only, with 9-blade Aero-Acoustic™ airfoil cross section, reinforced polymer construction blades bolted to corrosion resistant steel supports for all size 020-050 units and the size 060 unit with optional condenser coil.

    d. Fans discharge air vertically upward and are protected by PVC coated steel wire safety guards.

    e. Fans are statically and dynamically balanced.

    f. The condenser fan motors will be VFD driven.

    g. Compressor blankets will be applied to mitigate the level of outdoor sound on all refrigerant compressors. They shall be weather resistant are applied in both single and tandem arrangements.

    h. Unit efficiency is maximized by monitoring the refrigerant system and ambient conditions and controlling condenser fan performance.

32. Phase Loss Protection:

    If the phases of the electric supply are out of sequence, or if one phase is missing, the contacts will never close. If a phase is lost while the phase monitor is energized, the contacts will open immediately and will remain open until the error is corrected.

33. Extended Lube Lines:

    Factory-installed nylon lube line extensions shall be provided to the far side fan motor bearings to allow bearing lubrication from the fan motor access door.

34. Hot Gas Bypass (HGBP):

    A factory-installed hot gas bypass valve shall be available on the lead circuit to provide additional unloading capability for standard scroll compressors. HGBP shall only be active at the lowest stage of capacity.

1. Third-party trademarks and logos are the property of their respective owners.

Applied Packaged Cooling Unit and Applied Packaged Cooling Unit with Gas Heat — Variable Air Volume Application

HVAC Guide Specifications — Section 48/50A3,A5,A7,A9

Size Range: **20 to 60 Tons, Nominal (Cooling)**

Carrier Model Number: **48A3, 48A5, 48A7, 48A9, 50A3, 50A5, 50A7, 50A9**

Part 1 — General

1.01 SYSTEM DESCRIPTION

Outdoor roof curb or slab mounted, electronically controlled heating and cooling unit utilizing hermetic scroll compressors with crankcase heaters for cooling duty and gas heat or electric heat. Units shall discharge supply and return air vertically or horizontally as shown on contract drawings. EERs (Energy Efficiency Ratios) shall meet requirements of ASHRAE (American Society of Heating, Refrigeration, and Air-Conditioning Engineers) Standard 90.1-2013.

1.02 QUALITY ASSURANCE

A. Unit shall be rated in accordance with AHRI (Air-Conditioning, Heating, and Refrigeration Institute) Standard 340/360, latest edition.

B. Unit shall be designed to conform to ANSI/ASHRAE 15 (latest edition), ASHRAE 62, and UL (Underwriters Laboratories) Standard 1995.

C. Unit shall be listed by UL and UL Canada as a total package.

D. The 48A3,A5,A7,A9 units shall be designed to conform with ANSI (American National Standards Institute) Standard Z21.47 (U.S.A.) / CSA (Canadian Standards Association) Standard 2.3, Gas-Fired Central Furnaces.

E. Roof curb shall be designed to NRCA (National Roofing Contractors Association) criteria per Bulletin B-1986.

F. Insulation and adhesive shall meet NFPA (National Fire Protection Association) 90A requirements for flame spread and smoke generation.

G. The management system governing the manufacture of this product is ISO (International Organization for Standardization) 9001:2015 certified.

1.03 DELIVERY, STORAGE AND HANDLING

Unit shall be stored and handled per manufacturer's recommendations noted in the unit installation manual.

Part 2 — Products

2.01 EQUIPMENT

A. General:

Factory-assembled, single-piece heating and cooling unit. Contained within the unit enclosure shall be all factory wiring, piping, refrigerant charge (R-410A), operating oil charge, dual refrigerant circuits, microprocessor-based control system and associated hardware, and all special features required prior to field start-up.

B. Unit Cabinet:

1. Constructed of galvanized steel, bonderized and precoated with a baked enamel finish.
   a. Top cover shall be 18-gauge sheet metal with 0.75-in. thick, 1.5-lb density, fiberglass insulation.
   b. Access panels and doors shall be 20-gauge sheet metal with 0.5-in. thick, 1.5-lb density, fiberglass insulation.
   c. Corner and center posts shall be 16-gauge galvanized steel.
   d. Basepans in the heating and return air sections shall be 16-gauge galvanized steel.
   e. Basepans in the condenser section shall be 16-gage galvanized steel.
   f. Compressor rail shall be 12-gauge galvanized steel.
   g. Condensate pan shall be 16-gauge aluminized steel.
   h. Air baffles shall be 18-gauge galvanized steel with 0.5-in. thick, 1.5-lb density, fiberglass insulation.
   i. Base rail shall be 14-gauge galvanized steel.
   j. Fan deck (indoor and outdoor section) shall be 16-gauge galvanized steel.
2. Unit casing shall be capable of withstanding 500-hour salt spray exposure per ASTM (American Society for Testing and Materials) B117 (scribed specimen).
3. Sides shall have person-sized insulated hinged access doors for easy access to the control box and other areas requiring servicing. Each door shall seal against a rubber gasket to help prevent air and water leakage and be equipped to permit ease and safety during servicing.
4. Interior cabinet surfaces shall be sheet metal lined or insulated with flexible fire-retardant material, coated on the air side.
5. Unit shall have a factory-installed sloped condensate drain connection made from an aluminized steel or optional stainless steel.
6. Equipped with lifting lugs to facilitate overhead rigging.
7. Filters shall be accessible through a hinged access panel.

C. Fans:

1. Indoor Evaporator Fans:
   a. Double-width/double-inlet, centrifugal, belt driven, forward-curved type with single outlet discharge.

b. Fan shaft bearings shall be of the pillow-block type with positive locking collar and lubrication provisions.

c. Statically and dynamically balanced.

d. Evaporator fan shaft bearings shall have a life of 200,000 hours at design operating conditions in accordance with ANSI B3.15.

e. Solid fan shaft construction for size 020-050 units and two-piece solid fan shaft construction on the size 060 unit.

2. Condenser Fans:

a. Fans shall be direct-driven propeller type only, with corrosion-resistant blades riveted to corrosion-resistant steel supports for all size 020-050 units and the size 060 unit with optional condenser coil. Size 060 units with the microchannel condenser coil shall have a direct driven, 9-blade airfoil cross section, reinforced polymer construction, and shrouded-axial type fans with inherent corrosion resistance.

b. Fans discharge air vertically upward and are protected by PVC coated steel wire safety guards.

c. Statically and dynamically balanced.

3. Supply Fan Drive:

Unit shall be equipped with variable frequency drive (VFD) inverter. The VFD shall be installed inside the unit cabinet and shall be factory mounted, wired, and tested. The VFD shall control motor speed to maintain set point static pressure at the sensor tube location of the supply duct pressure transducer (the transducer is factory provided and installed; sensor tube must be field routed). The control system may be field-adjusted to maintain supply duct static pressure set points from 0 in. wg to 3.5 in. wg.

The variable frequency drive shall include the following features:

a. Full digital control with direct control from the unit *Comfort*Link controls.

b. Insulated Gate Bi-Polar Transistors (IGBT) used to produce the output pulse width modulated (PWM) waveform, allowing for quiet motor operation.

c. Inverters capable of operation at a frequency of 8 kHz, so no acoustic noise shall be produced by the motor.

d. Self diagnostics.

e. Personal lockout code for additional security.

f. Critical frequency avoidance.

g. RS485 capability standard.

h. Electronic thermal overload protection.

i. 5% swinging chokes for harmonic reduction and improved power factor.

j. All printed circuit boards shall be conformal coated.

k. Shall, through ABB, qualify for a 24-month warranty from date of commissioning or 30 months from date of sale, whichever comes first.

D. Compressors:

1. Fully hermetic, scroll type compressors with overload protection and short cycle protection with minimum on and off timers.

2. Factory rubber-in-shear mounted for vibration isolation.

3. Reverse rotation protection capability.

4. Crankcase heaters shall only be activated during compressor off mode.

E. Coils:

1. Standard evaporator coil shall have aluminum plate fins mechanically bonded to seamless internally grooved copper tubes with all joints brazed.

2. Standard condenser coil shall be microchannel design. The coil shall have a series of flat tubes containing a series of multiple, parallel flow microchannels layered between the refrigerant manifolds. Microchannel coils shall consist of a two-pass arrangement. Coil construction shall consist of aluminum alloys for the fins, tubes, and manifolds.

3. Coils shall be leak tested at 150 psig and pressure tested at 650 psig.

4. Optional condenser coil shall have aluminum plate fins mechanically bonded to seamless internally grooved copper tubes with all joints brazed.

5. Optional pre-coated aluminum-fin coils shall have a durable epoxy-phenolic coating to provide protection in mildly corrosive coastal environments. Coating shall be applied to the aluminum fin stock prior to the fin stamping process to create an inert barrier between the aluminum fin and copper tube. Epoxy-phenolic barrier shall minimize galvanic action between dissimilar metals.

6. Copper-fin coils shall be constructed of copper fins mechanically bonded to copper tubes and copper tube sheets. Galvanized steel tube sheets shall not be acceptable. A polymer strip shall prevent coil assembly from contacting the sheet metal coil pan to minimize potential for galvanic corrosion between coil and pan. All copper construction shall provide protection in moderate coastal environments.

7. E-coated coils shall have a flexible epoxy polymer coating uniformly applied to all coil surface areas without material bridging between fins. Coating process shall ensure complete coil encapsulation. Color shall be high gloss black with gloss—60 deg of 65 to 90% per ASTM D523-89. Uniform dry film thickness from 0.8 to 1.2 mil on all surface areas including fin edges. Superior hardness characteristics of 2H per ASTM D3363-92A and cross-hatch adhesion of 4B-5B per ASTM

D3359-93. Impact resistance shall be up to 160 in./lb (ASTM D2794-93). Humidity and water immersion resistance shall be up to minimum 1000 and 250 hours respectively (ASTM D2247-92 and ASTM D870-92). Corrosion durability shall be confirmed through testing to be no less than 6000 hours salt spray per ASTM B117-90. Coil construction shall be aluminum fins mechanically bonded to copper tubes.

F. Gas Heating Section (48 Series Only):
   1. Induced-draft combustion type with energy-saving direct spark ignition systems and redundant main gas valves.
   2. The heat exchanger shall be of the tubular section type constructed of a minimum of 20-gauge steel coated with a nominal 1.2 mil aluminum-silicone alloy for corrosion resistance. Optional stainless steel heat exchangers shall be available.
   3. Burners shall be of the in-shot type constructed of aluminum coated steel.
   4. All gas piping shall enter the unit cabinet at a single location.
   5. Induced Draft Fans:
      a. Direct-driven, single inlet, forward-curved centrifugal type.
      b. Statically and dynamically balanced.
      c. Made from steel with a corrosion-resistant finish.
   6. High-corrosion areas such as flue gas collection and exhaust areas shall be lined with corrosion resistant material.

G. Refrigerant Components:

   Unit shall be equipped with dual refrigerant circuits each containing:
   1. Solid core filter drier.
   2. Thermostatic expansion valve.
   3. Fusible plug.

H. Filter Section:

   Standard filter section shall be supplied with 2-in. thick disposable fiberglass filters.

I. Controls and Safeties:
   1. Unit *Comfort*Link Controls:
      a. Scrolling marquee display.
      b. CCN (Carrier Comfort Network®) capable.
      c. Unit control with standard suction pressure and condensing pressure transducers.
      d. Shall provide a 5°F temperature difference between cooling and heating set points to meet ASHRAE 90.1, energy standard.
      e. Shall provide and display a current alarm list and an alarm history list.
      f. Automatic compressor redundancy.
      g. Service run test capability.
      h. Shall accept input from a CO_2 sensor (both indoor and outdoor).
      i. Configurable alarm light shall be provided which activates when certain types of alarms occur.
      j. Compressor minimum run time (3 minutes) and minimum off time (3 minutes) are provided.
      k. Service diagnostic mode.
      l. Optional integrated economizer control or two-position self-closing adjustable outside-air damper.
      m. Minimum of 3 capacity stages of mechanical capacity control (excluding hot gas bypass) controlled with logic to maintain supply air temperature set point.
      n. Optional minimum load valve for additional capacity stage.
      o. Unit shall be complete with self-contained low voltage control circuit.
   2. Safeties:
      a. Unit shall incorporate a solid-state compressor lockout which provides optional reset capability at the space thermostat should any of the following safety devices trip and shut off compressor:
         1) Compressor lockout protection provided for either internal or external overload.
         2) Low-pressure protection.
         3) Freeze protection (evaporator coil).
         4) High-pressure protection (high pressure switch or internal).
         5) Compressor reverse rotation protection.
         6) Loss of charge protection.
         7) Welded contactor protection.
      b. Supply-air sensor shall be located in the unit and should be used for economizer control and compressor stage control.
      c. Induced draft heating section (48 Series) shall be provided with the following minimum protections:
         1) High-temperature limit switch.
         2) Induced-draft motor speed sensor.
         3) Flame rollout switch.
         4) Flame proving controls.
         5) Redundant gas valve.

J. Operating Characteristics:
   1. Unit shall be capable of starting and running at 115°F ambient outdoor temperature per maximum load criteria of AHRI Standard 340/360.
   2. Unit with standard controls will operate in cooling down to an outdoor ambient temperature of 32°F.

3. Unit shall be provided with fan time delay to prevent cold air delivery.

K. Electrical Requirements:

1. All unit power wiring shall enter unit cabinet at a single location.
2. Unit shall have a short circuit current rating (SCCR) of 5 kA.

L. Motors:

1. Compressor motors shall be cooled by refrigerant gas passing through motor windings and shall have either internal line break thermal and current overload protection or external current overload modules with compressor temperature sensors.
2. All condenser-fan motors shall be totally enclosed 3-phase type with permanently lubricated ball bearings, class F insulation and internal, automatic-reset thermal overload protection or manual reset calibrated circuit breakers.
3. All indoor fan and power exhaust motors 5 hp and larger shall meet the minimum efficiency requirements as established by the Energy Independence and Security Act (EISA) of 2007.

M. Special Features:

Certain features are not applicable when the features designated * are specified. For assistance in amending the specifications, contact your local Carrier Sales Office.

1. Variable Capacity Compressor:

   A lead circuitvariable capacity compressor shall be available for constant volume, staged air volume, and variable air volume configurations. The *Comfort*Link control system shall be capable of unloading this compressor in an infinite number of steps from 100% of compressor capacity down to 50% of compressor capacity.

2. Humidi-MiZer® Adaptive Dehumidification:

   The Humidi-MiZer dehumidification system shall be factory installed with an e-coated reheat coil and shall provide greater dehumidification of the occupied space by using two modes of dehumidification instead of the normal design cooling mode of the unit:

   a. Subcooling mode shall further subcool the hot liquid refrigerant leaving the condenser coil when both temperature and humidity in the space are not satisfied.
   b. Hot gas reheat mode shall mix a portion of the hot gas from the discharge of the compressor with the hot liquid refrigerant leaving the condenser coil to create a two-phase heat transfer in the system, resulting in a neutral leaving-air temperature.
   c. The system shall be equipped with modulating control valves to provide precise leaving air temperature control. On-off, cycling type control shall not be acceptable.
   d. Reheat coil shall be e-coated as standard.

3. Ultra Low Leak Economizer:

   Dry bulb, differential dry bulb temperature, optional enthalpy, or optional differential enthalpy controlled integrated type consisting of dampers, actuator, and linkages in conjunction with control system to provide primary cooling using outdoor air, conditions permitting, supplemented with mechanical cooling when necessary.

   a. Economizer shall meet the requirements of the California Energy Commission Title 24 economizer requirements.
   b. Dampers shall be a gear-driven ultra low leakage type with blade and edge seals. Dampers shall exhibit a maximum leakage rate of 3 cfm per square foot of area at 1 in. wg pressure differential when tested in accordance with AMCA (Air Movement and Control Association) Standard 500.

4. Barometric Relief Damper Package:

   a. Package shall include damper, seals, hardware, and hoods to relieve excess internal pressure.
   b. Damper shall close due to gravity upon unit shutdown.

5. Power Exhaust:

   Package shall include a multiple exhaust fan (centrifugal style) fan, 1 Hp 208-230, 460 v direct-drive motor, and damper for vertical flow units with economizer to control over-pressurization of building. Control shall be through *Comfort*Link controls based on optional building pressure sensor. On size 020-050 units, 4 stages of control shall be available. On size 060 units, 6 stages of control shall be available.

6. Liquefied Propane Conversion Kit (48 Series):

   Kit shall contain all the necessary hardware and instructions to convert a standard natural gas unit for use with liquefied propane gas.

7. Convenience Outlet:

   Shall be factory installed and internally mounted with an externally accessible 115-v, 15 amp GFI (ground fault interrupter), female receptacle with hinged cover. A step-down transformer and overload protection shall be included so no additional wiring is necessary unless the field-wired outlet has been requested. When applied with a unit-mounted disconnect, the outlet shall be wired to the load side of the disconnect so the outlet will shut off with the disconnect.

8. Non-Fused Disconnect Switch:

   Shall be factory installed, internally mounted, and UL approved. Non-fused switch shall provide unit power shutoff. Shall be accessible from outside the unit and shall provide power off lockout capability.

9. Electric Heater (50 Series Units Only):

   Electric resistance heaters shall be factory-installed, nichrome element type, open wire coils with 0.29 in. inside diameter, insulated with ceramic bushings, and include operating and safety controls. Coil ends are staked and welded to terminal screw slots.

10. Hail Guard, Condenser Coil Grille:

    Shall protect the condenser coil from hail, flying debris, and damage by large objects without increasing unit clearances.

11. CO_2 Sensor:

    The CO_2 sensor shall have the ability to monitor CO_2 levels and relay information to the controller. The controller will use CO_2 level information to modulate the economizer and provide demand controlled ventilation. The sensor shall be available as a field-installed or factory-installed return air sensor or a remote space sensor.

12. Return Air Smoke Detector:

    The smoke detector shall send input to the controller to shut down the unit in case smoke is detected. The smoke detector shall be factory installed in the return air section or shall be available as a field-installed accessory.

13. Filter Status:

    The filter status switch shall be a pressure differential switch and will indicate a dirty filter. The switch shall be available as field or factory installed.

14. Humidity Sensor:

    A humidity sensor will allow for outside air enthalpy changeover control using the standard outside air dry bulb sensor and the accessory humidity sensor. When both an outside and return air humidity sensor are used, differential enthalpy changeover can be supported.

15. Two-Position Damper:

    A two-position damper shall admit up to 25% outdoor air during fan operation and shall close when the fan is off. The damper position shall be mechanically adjustable.

16. 4-Inch Filters:

    Optional filter section shall be supplied with 4-in. thick MERV (Minimum Efficiency Reporting Value) 7 pleated fiberglass filters.

17. Control Expansion Module (CEM):

    Shall provide the following additional optional features:

    a. Remote set point.
    b. Demand limit control.
    c. Remote economizer position.
    d. Fire and smoke control override control.
    e. Remote sensor monitoring.
    f. Fan status switch monitoring.

18. Bypass for Supply Fan VFD (Variable Frequency Drive):

    Units may be equipped with an optional manual bypass switch which allows the supply fan VFD to be electrically bypassed.

19. BACnet[1] Communication Option:

    Shall provide factory-installed communication capability with a BACnet MS/TP network. Allows integration with i-Vu® Open Control System or a BACnet Building Automation System.

20. Modbus[1]Protocol Translator:

    A controller-based module shall provide CCN to MODBUS Remote Terminal Unit (RTU) protocol conversion.

21. LonWorks[1] Protocol Translator:

    A controller-based module shall provide CCN to LON FT-10A ANSI/EIA-709.1 protocol conversion.

22. Navigator™ Display Module:

    The Navigator display module shall be a portable hand-held display module with a minimum of 4 lines and 20 characters per line, of clear English, Spanish, Portuguese, or French language. Display menus shall provide clear language descriptions of all menu items, operating modes, configuration points and alarm diagnostics. Reference to factory codes shall not be accepted. An industrial grade coiled extension cord shall allow the display module to be moved around the chiller. Magnets shall hold the display module to any sheet metal panel to allow hands-free operation. Display module shall have NEMA (National Electrical Manufacturers Association) 4x housing suitable for use in outdoor environments. Display shall have back light and contrast adjustment for easy viewing in bright sunlight or night conditions. The display module shall have raised surface buttons with positive tactile response.

23. Staged Gas Heat (48A3,A5 only):

    The control shall have the option for control of the gas heat to a discharge air temperature by sequencing on the gas cells to provide up to 11 stages of capacity. The control shall be integrated directly into the main unit controls and shall include leaving air temperature sensors to ensure that high temperatures do not occur during the operation of the staged gas heat.

24. Full Perimeter Roof Curbs (Horizontal and Vertical):

    Shall be formed of 14-gauge galvanized steel with wood nailer strip and shall be capable of supporting entire unit weight.

---

1. Third-party trademarks and logos are the property of their respective owners.

25. Security Grille (48/50A060 Unit with MCHX [microchannel heat exchanger] Only):

    Factory-installed grille shall limit access to compressor and condenser coil area to authorized personnel only.

26. Double Wall Option:

    Unit cabinet shall have double wall construction featuring flexible fire retardant fiberglass insulation sandwiched between pre-painted exterior panels and galvanized steel inner panels.

27. Compressor Sound Blanket:

    Field-installed accessory, consisting of compressor sound blankets which are used to mitigate the level of outdoor sound. Available in both single and tandem arrangements.

28. Low Outdoor Sound Condenser Fans:

    Low sound condenser fan system shall be provided to reduce outdoor sound levels.

29. Greenspeed® Intelligence:
    a. This factory-installed option shall regulate outdoor fan motor speeds in response to the saturated condensing temperature of the refrigeration circuits and local ambient conditions.
    b. The control shall be capable of operating the rooftop unit with outdoor temperature at –20°F.
    c. Fans shall be direct-driven shrouded-axial propeller type fans only, with 9-blade Aero-Acoustic™ airfoil cross section, reinforced polymer construction blades bolted to corrosion resistant steel supports for all size 020-050 units and the size 060 unit with optional condenser coil.
    d. Fans discharge air vertically upward and are protected by PVC coated steel wire safety guards.
    e. Fans are statically and dynamically balanced.
    f. The condenser fan motors will be VFD driven.
    g. Compressor blankets will be applied to mitigate the level of outdoor sound on all refrigerant compressors. They shall be weather resistant are applied in both single and tandem arrangements.
    h. Unit efficiency is maximized by monitoring refrigerant system and ambient conditions and controlling condenser fan performance.

30. Low Ambient Control:
    a. This factory-installed option shall regulate outdoor fan motor speeds in response to the saturated condensing temperature of the refrigeration circuits and local ambient conditions.
    b. The control shall be capable of operating the rooftop unit mechanical cooing with outdoor temperature at –20°F.

31. Phase Loss Protection:

    If the phases of the electric supply are out of sequence, or if one phase is missing, the contacts will never close. If a phase is lost while the phase monitor is energized, the contacts will open immediately and will remain open until the error is corrected.

32. Extended Lube Lines:

    factory-installed nylon lube line extensions shall be provided to the far side fan motor bearings to allow bearing lubrication from the fan motor access door.

33. Hot Gas Bypass (HGBP):

    A factory-installed hot gas bypass valve shall be available on the lead circuit to provide additional unloading capability for standard scroll compressors. HGBP shall only be active at the lowest stage of capacity.

Manufacturer reserves the right to discontinue, or change at any time, specifications or designs without notice and without incurring obligations.

Pg 110 Catalog No. 04-52480129-01 Printed in U.S.A. Form 48-50A-22PD
Replaces: 48-50A-21PD