559K*08-16
Single Package Rooftop Electric Cooling Unit with Puron® (R-410A) Refrigerant
7.5 to 15 Nominal Tons

bryant®

Service and Maintenance Instructions

CONTENTS

Page

SAFETY CONSIDERATIONS 1
UNIT ARRANGEMENT AND ACCESS 2
General 2
Routine Maintenance 3
Filters 3
SUPPLY FAN (BLOWER) SECTION 4
Supply Fan (Direct-Drive) 4
2-Speed Indoor Fan Motor 12
COOLING 12
Condenser Coil 12
Condenser Coil Maintenance and Cleaning Recommendation 12
Evaporator Coil 14
Evaporator Coil Metering Devices 14
THERMOSTATIC EXPANSION VALVE (TXV) 14
TXV Operation 14
Replacing TXV 14
Refrigerant System Pressure Access Ports 14
PURON (R-410A) REFRIGERANT 15
Refrigerant Charge 15
COMPRESSOR 21
Lubrication 21
Replacing Compressor 21
Compressor Rotation 21
Filter Drier 21
Condenser-Fan Adjustment 21
Troubleshooting Cooling System 22
CONVENIENCE OUTLETS 23
Convenience Outlets 23
Installing Weatherproof Cover 23
Non-Powered Type 23
Unit-Powered Type 23
Duty Cycle 24
Maintenance 24
Fuse on Powered Type 24
ELECTRIC HEATERS 24
Completing Heater Installation 25
SMOKE DETECTORS 26
System 26
Controller 26
Smoke Detector Sensor 26
Smoke Detector Locations 26
Completing Installation of Return Air Smoke Detector 27
FIOP Smoke Detector Wiring and Response 28
SENSOR AND CONTROLLER TESTS 29
Sensor Alarm Test 29
Controller Alarm Test 29
Dirty Controller Test 29
Dirty Sensor Test 29
Changing the Dirt Sensor Test 29
Remote Station Test 29
SD-TRK4 Remote Alarm Test Procedure 29
Remote Test/Reset Station Dirty Sensor Test 30
Dirty Sensor Test Using an SD-TRK4 30
Detector Cleaning 30
Indicators 30
Troubleshooting 31
PROTECTIVE DEVICES 31
Compressor Protection 31
Relief Device 32
Control Circuit, 24-V 32
ECONOMIZER SYSTEMS 33
EconomizerONE (Field-Installed Accessory) 34
EconomizerONE (Factory Option) 38
PRE-START-UP/START-UP 59
START-UP, GENERAL 59
Unit Preparation 59
Additional Installation/Inspection 59
Return-Air Filters 59
Outdoor-Air Inlet Screens 59
Compressor Mounting 59
Internal Wiring 59
Refrigerant Service Ports 59
Compressor Rotation 60
Cooling 60
Heating 60
Ventilation (Continuous Fan) 60
FASTENER TORQUE VALUES 60
APPENDIX A — MODEL NUMBER NOMENCLATURE 61
APPENDIX B — PHYSICAL DATA 62
APPENDIX C — FAN PERFORMANCE 65
APPENDIX D — WIRING DIAGRAMS 86
APPENDIX E — LOW AMBIENT CONTROL SENSOR LOCATION 100
START-UP CHECKLIST CL-1

SAFETY CONSIDERATIONS

Installation and servicing of air-conditioning equipment can be hazardous due to system pressure and electrical components. Only trained and qualified service personnel should install, repair, or service air-conditioning equipment. Untrained personnel can perform the basic maintenance functions of replacing filters. Trained service personnel should perform all other operations.

When working on air-conditioning equipment, observe precautions in the literature, tags and labels attached to the unit, and other safety precautions that may apply. Follow all safety codes. Wear safety glasses and work gloves. Use quenching cloth for unbrazing operations. Have fire extinguishers available for all brazing operations.

Follow all safety codes. Wear safety glasses and work gloves. Use quenching cloth for brazing operations. Have fire extinguisher

Manufacturer reserves the right to discontinue, or change at any time, specifications or designs without notice and without incurring obligations.

available. Read these instructions thoroughly and follow all warnings or cautions attached to the unit. Consult local building codes and National Electrical Code (NEC) for special requirements.

Recognize safety information. This is the safety ALERT symbol ⚠. When you see this symbol on the unit and in instructions or manuals, be aware of the potential for physical injury hazards.

Understand the signal words **DANGER**, **WARNING**, and **CAUTION**. These words are used with the safety ALERT symbol. DANGER indicates a hazardous situation which, if not avoided, will result in death or severe personal injury. **WARNING** indicates a hazardous situation which, if not avoided, could result in death or personal injury. **CAUTION** indicates a hazardous situation which, if not avoided, could result in minor to moderate injury or product and property damage. **IMPORTANT** is used to address practices not related to physical injury. **NOTE** is used to highlight suggestions which will result in enhanced installation, reliability, or operation.

⚠ WARNING

ELECTRICAL OPERATION HAZARD

Failure to follow this warning could result in personal injury or death.

Before performing service or maintenance operations on unit, LOCKOUT/TAGOUT the main power switch to unit. Electrical shock and rotating equipment could cause severe injury.

⚠ WARNING

ELECTRICAL OPERATION HAZARD

Failure to follow this warning could result in personal injury or death.

Units with convenience outlet circuits can use multiple disconnects. Check convenience outlet for power status before opening unit for service. Locate the disconnect switch and lock it in the open position it. LOCKOUT/TAGOUT this switch to notify others.

⚠ WARNING

UNIT OPERATION AND SAFETY HAZARD

Failure to follow this warning could cause personal injury, death and/or equipment damage.

Puron (R-410A) refrigerant systems operate at higher pressures than standard R-22 systems. Do not use R-22 service equipment or components on Puron refrigerant equipment.

⚠ WARNING

FIRE, EXPLOSION HAZARD

Failure to follow this warning could result in death, serious personal injury and/or property damage.

Never use air or gases containing oxygen for leak testing or for operating refrigerant compressors. Pressurized mixtures of air or gases containing oxygen can lead to an explosion.

⚠ WARNING

FIRE, EXPLOSION HAZARD

Failure to follow this warning could result in death, serious personal injury and/or property damage.

Never use non-certified refrigerants in this product. Non-certified refrigerants could contain contaminates that could lead to unsafe operating conditions. Use ONLY refrigerants that conform to AHRI Standard 700.

⚠ CAUTION

UNIT DAMAGE HAZARD

Failure to follow this caution may result in reduced unit performance or unit shutdown.

High velocity water from a pressure washer, garden hose, or compressed air should never be used to clean a coil. The force of the water or air jet will bend the fin edges and increase airside pressure drop.

IMPORTANT: Lockout/Tag-out is a term used when electrical power switches are physically locked preventing power to the unit. A placard is placed on the power switch alerting service personnel that the power is disconnected.

UNIT ARRANGEMENT AND ACCESS

General

Figures 1-4 show general unit arrangement and access locations.

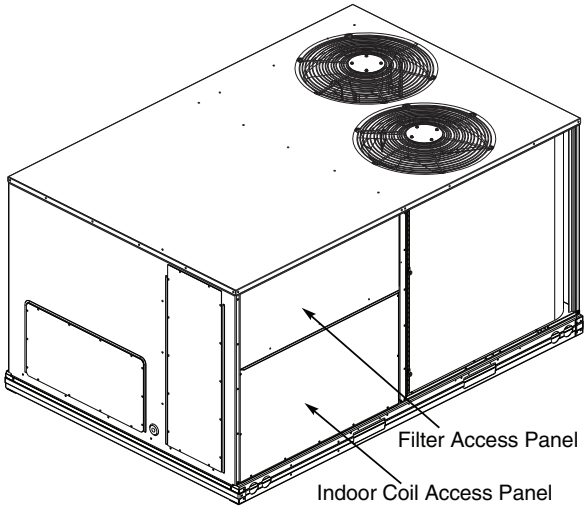

Fig. 1 — Typical Access Panel Locations (size 08-14 units)

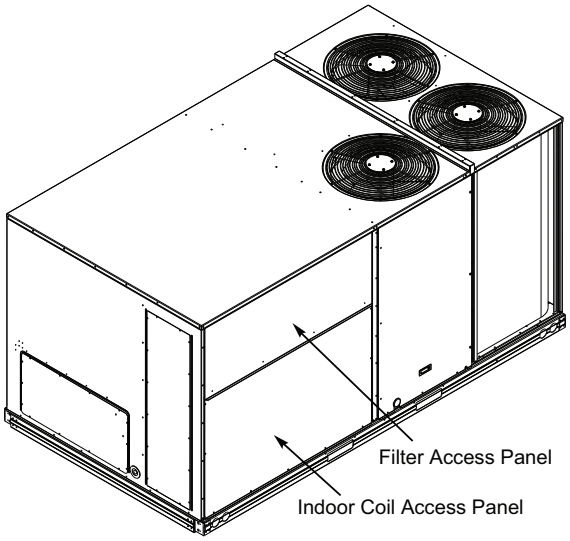

Fig. 2 — Typical Access Panel Locations (size 16 units)

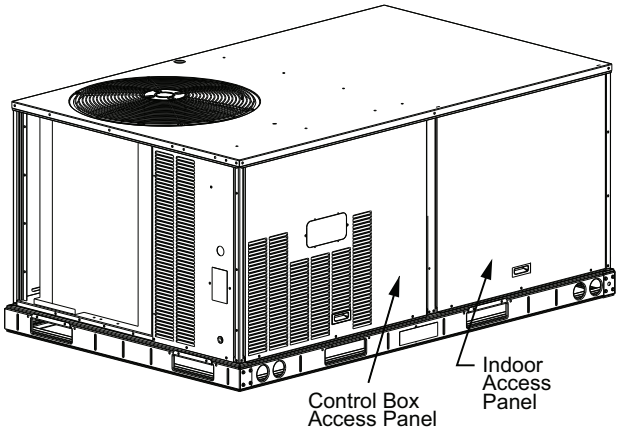

Fig. 3 — Blower Access Panel Location (size 08-14 units)

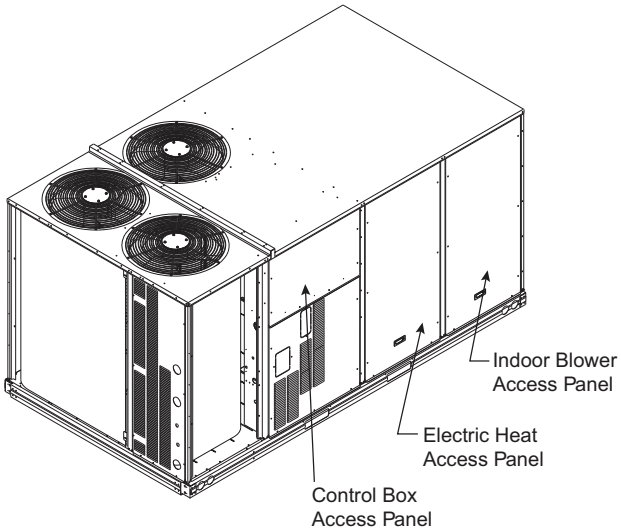

Fig. 4 — Blower Access Panel Location (size 16 units)

Routine Maintenance

These items should be part of a routine maintenance program, to be checked every month or two, until a specific schedule for each can be identified for this installation:

QUARTERLY INSPECTION (AND 30 DAYS AFTER INITIAL START)

- Return air filter replacement
- Outdoor hood inlet filters cleaned
- Condenser coil cleanliness checked
- Condensate drain checked

SEASONAL MAINTENANCE

These items should be checked at the beginning of each season (or more often if local conditions and usage patterns dictate):

Air Conditioning

- Ensure outdoor fan motor mounting bolts are tight
- Ensure compressor mounting bolts are tight
- Inspect outdoor fan blade positioning
- Ensure control box is clean
- Check control box wiring condition
- Ensure wire terminals are tight
- Check refrigerant charge level
- Ensure indoor coils are clean
- Check supply blower motor amperage

Electric Heating

- Inspect power wire connections
- Ensure fuses are operational
- Ensure manual reset limit switch is closed

Economizer or Outside Air Damper

- Check inlet filters condition
- Check damper travel (economizer)
- Check gear and dampers for debris and dirt

Air Filters and Screens

Each unit is equipped with return air filters. If the unit has an economizer, it will also have an outside air screen. If a manual outside air damper is added, an inlet air screen will also be present.

Each of these filters and screens will need to be periodically replaced or cleaned.

Filters

RETURN AIR FILTERS

⚠ CAUTION

EQUIPMENT DAMAGE HAZARD

Failure to follow this CAUTION can result in premature wear and damage to equipment.

DO NOT OPERATE THE UNIT WITHOUT THE RETURN AIR FILTERS IN PLACE.

Dirt and debris can collect on heat exchangers and coils possibly resulting in a small fire. Dirt buildup on components can cause excessive current used resulting in motor failure.

Return air filters are disposable fiberglass media type. Access to the filters is through the small lift-out panel located on the rear side of the unit, above the evaporator/return air access panel. (See Fig. 5.)

To remove the filters:

1. Grasp the bottom flange of the upper panel.
2. Lift up and swing the bottom out until the panel disengages and pulls out.
3. Reach inside and extract the filters from the filter rack.
4. Replace these filters as required with similar replacement filters of same size.

To re-install the access panel:

1. Slide the top of the panel up under the unit top panel.
2. Slide the bottom into the side channels.
3. Push the bottom flange down until it contacts the top of the lower panel (or economizer top).

OUTSIDE AIR HOOD

Outside air hood inlet screens are permanent aluminum-mesh type filters. Check these for cleanliness. Remove the screens when cleaning is required. Clean by washing with hot low-pressure water and soft detergent and replace all screens before restarting the unit. Observe the flow direction arrows on the side of each filter frame.

ECONOMIZER INLET AIR SCREEN

This air screen is retained by filter clips under the top edge of the hood. (See Fig. 5.)

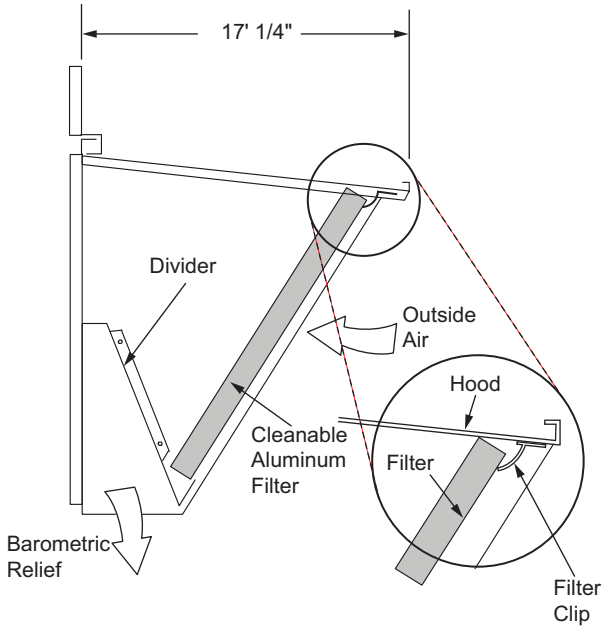

Fig. 5 — Filter Installation

To remove the filter, open the filter clips. Re-install the filter by placing the frame in its track, then closing the filter clips.

MANUAL OUTSIDE AIR HOOD SCREEN

This inlet screen is secured by a retainer angle across the top edge of the hood. (See Fig. 6.)

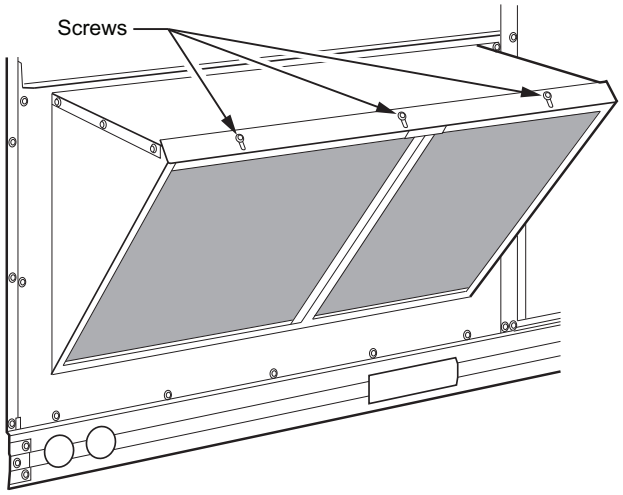

Fig. 6 — Screens Installed on Outdoor-Air Hood

To remove the screen, loosen the screws in the top retainer and slip the retainer up until the filter can be removed. Re-install by placing the frame in its track, rotating the retainer back down, and tightening all screws.

SUPPLY FAN (BLOWER) SECTION

⚠WARNING

ELECTRICAL SHOCK HAZARD

Failure to follow this warning could result in personal injury or death.

Before performing service or maintenance operations on unit, LOCKOUT/TAG-OUT the main power switch to unit. Electrical shock and rotating equipment could cause severe injury.

Supply Fan (Direct-Drive)

All 559K units have the Axion™ Fan Technology direct drive vane axial fan system. The fan is driven by an ECM motor with speed that is user set through the Unit Control Board (UCB). Speeds are fully configurable from 40% to 100% of motor's maximum speed. See Fig. 7 and 8.

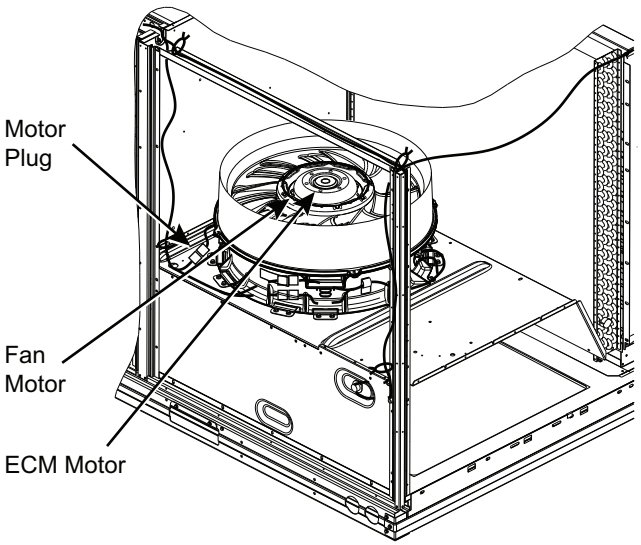

Fig. 7 — Direct-Drive Supply Fan Assembly

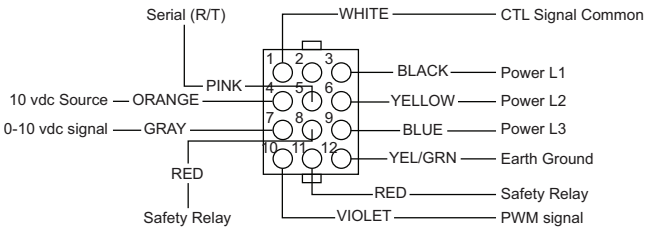

Fig. 8 — ECM Motor Plug Connectors

EVALUATING MOTOR SPEED

The direct drive ECM blower motor uses a constant speed design. Motor speed is controlled by a 0-10 vdc signal, where 10 vdc is equal to motor's maximum rpm.

SELECTING FAN SPEED

All units come factory set for 7.8 vdc or approximately 78% of the motor's maximum speed. Fan speed should be set per job specification cfm (cubic feet per minute) and ESP (external static pressure) required and per Fan Speed Set Up label included on the unit's high voltage cover. In some cases, the Fan Speed Set Up label may already include the field setting if unit was previously installed. Check the box on the lower half of the label to see if the field voltage setting was filled in and if so, set fan speed to that voltage. Otherwise see detailed instructions below.

NOTE: Fan Speed Set Up is for full load airflow. If the unit has multiple stages of cooling, low cool and ventilation may operate at lower fan rpms. This offset is factory set and controlled by the UCB. If fan speed verification is being done with a strobe, fan speed should be verified in all unit operation modes.

Units with Electro-mechanical controls

The Fan Speed set up controls are located on the lower section of the Unit Control Board (UCB). See Fig. 9 for location.

1. Check the job specifications for the cfm (cubic feet per minute) and ESP (external static pressure) required.
2. Using the chart on the Fan Speed Set Up labels (see Fig. 10), calculate the vdc from the cfm and ESP for the base unit.
3. If installing any accessories listed at the bottom of the Set Up Label, add accessory vdc to base unit vdc in upper portion of label. For electric heaters use only one adder. (ex. 2 stage heater uses only 2 stage adder, not 1 stage plus 2 stage).
4. The Fan Speed Set Up labels are located on the High Voltage cover in the Control Box.
5. Connect a multimeter to the vdc terminals on the UCB.
6. Set the Range Switch to either A, B, or C per the Switch Range table.
7. Using a straight blade screwdriver turn the vdc control dial to fine tune the vdc reading.
8. Record the reading in the Field Setting field.

NOTE: For units equipped with the Perfect Humidity™ option, when replacing the UCB cut JMP 1,2 and 3 in the REHEAT/HP section of the replacement UCB.

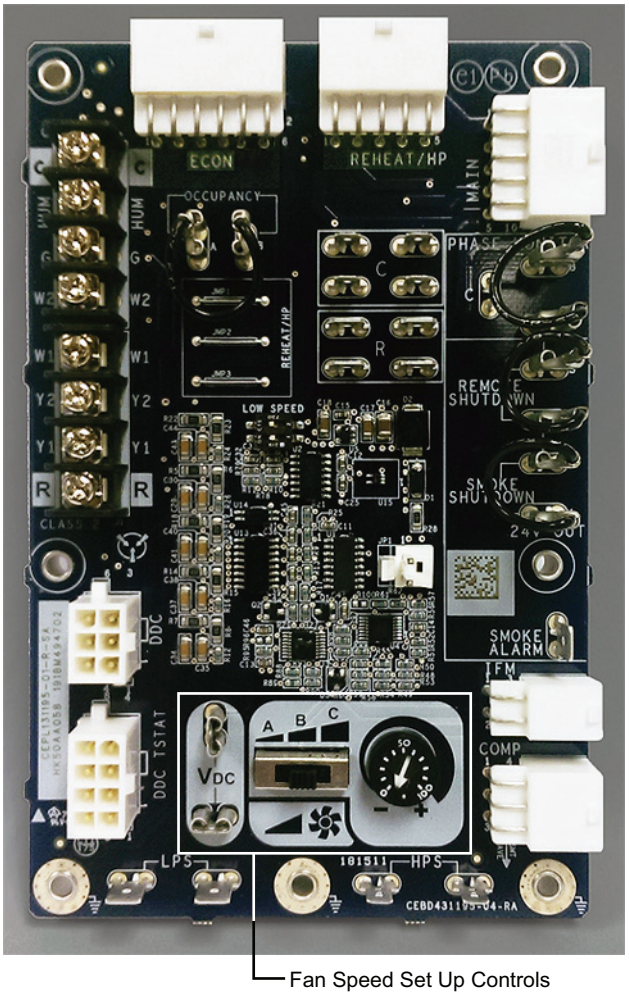

Fig. 9 — UCB Fan Speed Controls

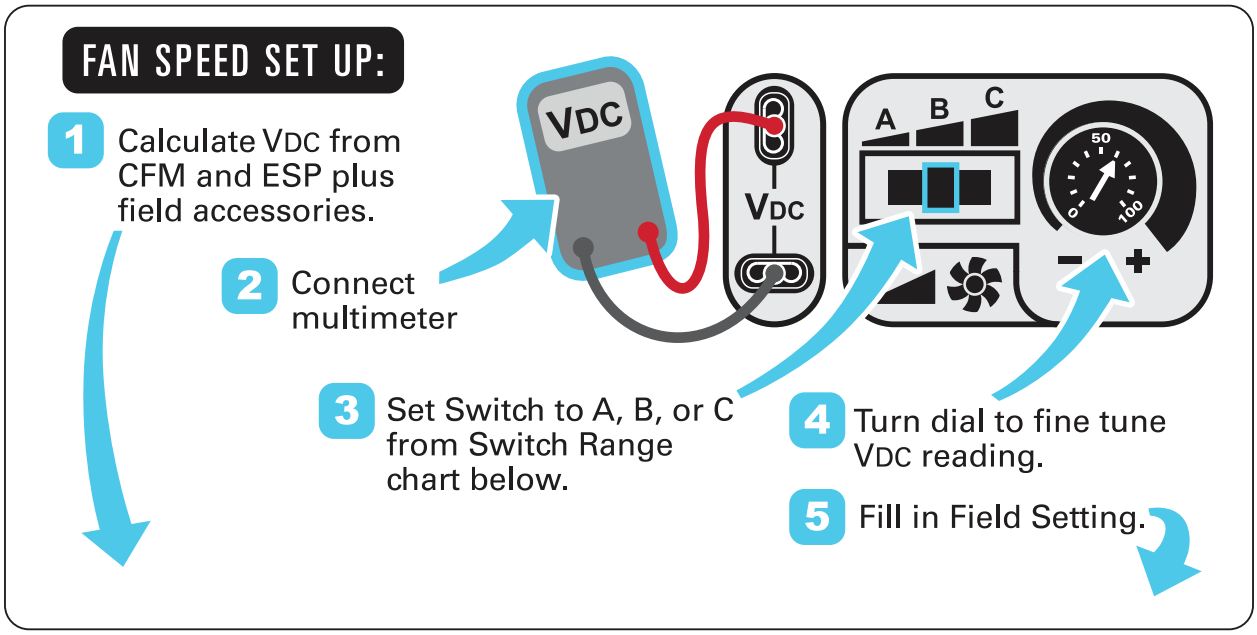

VDC Calculator

UNIT MODEL NUMBER / CFM	ESP in. wg 0.2	0.4	0.6	0.8	1.0	1.2	1.4	1.6	1.8	2.0
1500	5.4	6.2	6.9	7.5	8.1	8.6	9.1	9.6		
1625	5.8	6.5	7.1	7.7	8.3	8.8	9.3	9.8		
1750	6.1	6.8	7.4	8.0	8.5	9.0	9.5	9.9		
1875	6.5	7.1	7.7	8.2	8.7	9.2	9.7			
2000	6.8	7.4	7.9	8.5	9.0	9.5	9.9			
2125	7.2	7.7	8.2	8.7	9.2	9.7				
2250	7.6	8.0	8.5	9.0	9.5	10.0				
2375	7.9	8.4	8.8	9.3	9.8					
2500	8.3	8.7	9.2	9.6						
Field Accessories:										
Economizer	0.1	0.1	0.1	0.1	0.1	0.1	0.1	0.1		
1 Stage E Heat	0.2	0.2	0.2	0.2	0.2	0.2	0.2	0.2		
2 Stage E Heat	0.3	0.3	0.3	0.3	0.3	0.3	0.3	0.3		

Factory Setting: 9.0 VDC

Field Setting:

Record field setting here

_____ VDC

Switch Range: *

A	4.1 - 7.5
B	6.9 - 8.7
C	7.7 - 10.0

** Overlap in A, B, C switch range designed for maximum field adjustment potential. For example 7.2 can be set at either A or B.*

NOTE: Values in the Field Accessories section are VDC adders.

Fig. 10 — Example of Fan Speed Set Up Labels for Electro-Mechanical Controls

TROUBLESHOOTING THE ECM MOTOR

Axion™ Fan Technology motors are designed with several built-in protections included in the motor software. If the motor detects a fault it will safely shut down. See Table 5, “Supply Fan Motor Logic and Safety Relays” on page 32 for a complete list.

Troubleshooting the motor requires a voltmeter.

1. Disconnect main power to the unit.
2. Disconnect motor plug in supply section of the unit.
3. Restore main unit power.
4. Check for proper line voltage at motor power leads Black (PL1-1), Yellow (PL1-2), and Blue (PL1-3). Blue is only present on 3-phase motors. See the following table.

559K UNIT VOLTAGE	MOTOR VOLTAGE	MIN-MAX VOLTS
208/230	230	187-253
460	460	360-506
575	575	517-633

5. Disconnect main power.
6. Reconnect motor plug in supply section of unit.
7. Restore main power.
8. Check for proper motor control voltage signal of 9.7 vdc to 10.3 vdc at IFM-1 and IFM-3 on Unit Control Board (UCB). See Fig. 11.
9. Using a jumper wire from unit control terminals R to G, engage motor operation.
10. Verify control signal from user speed selection switch by placing voltmeter taps in provided terminals marked vdc. Signal should be between 3.8 vdc and 10.3 vdc.
11. If the motor does not start and run, remove the fan assembly and replace the motor with one having the same part number. Do not substitute with an alternate design motor as the voltage/speed programming will not be the same as that on an original factory motor.

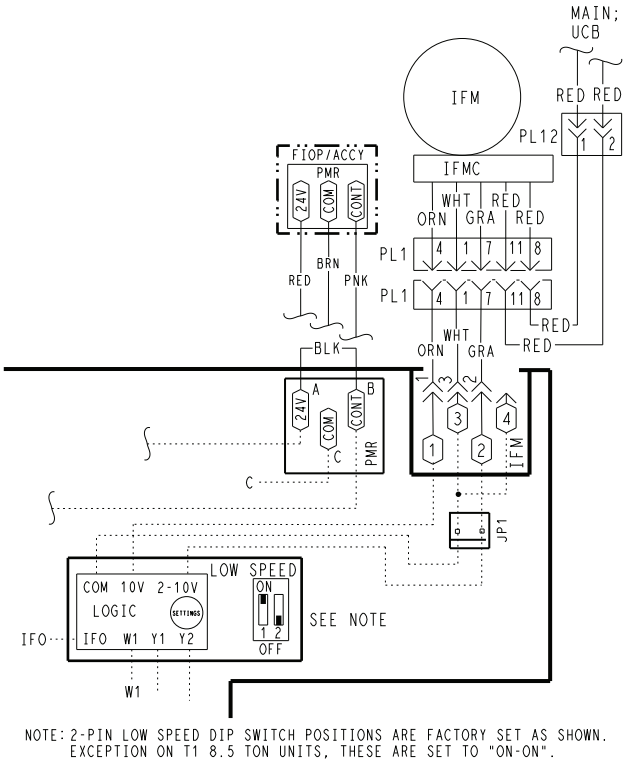

Fig. 11 — Supply Fan Control Wiring Diagram

Removing the Motor and Fan Assembly

NOTE: Due to press fit design of composite Rotor on Motor, it is highly recommended that any time a motor is replaced the fan rotor is replaced as well. The rest of the assembly may be reused.

See Fig. 12.

1. Unplug motor harness from control box harness and cut wire tie at the fan deck.
2. Unplug connectors from stator temperature limit switch.
3. Remove eight screws at front of stator on fan deck.
4. Slide fan assembly forward a couple of inches to clear rear brackets and lift assembly out.

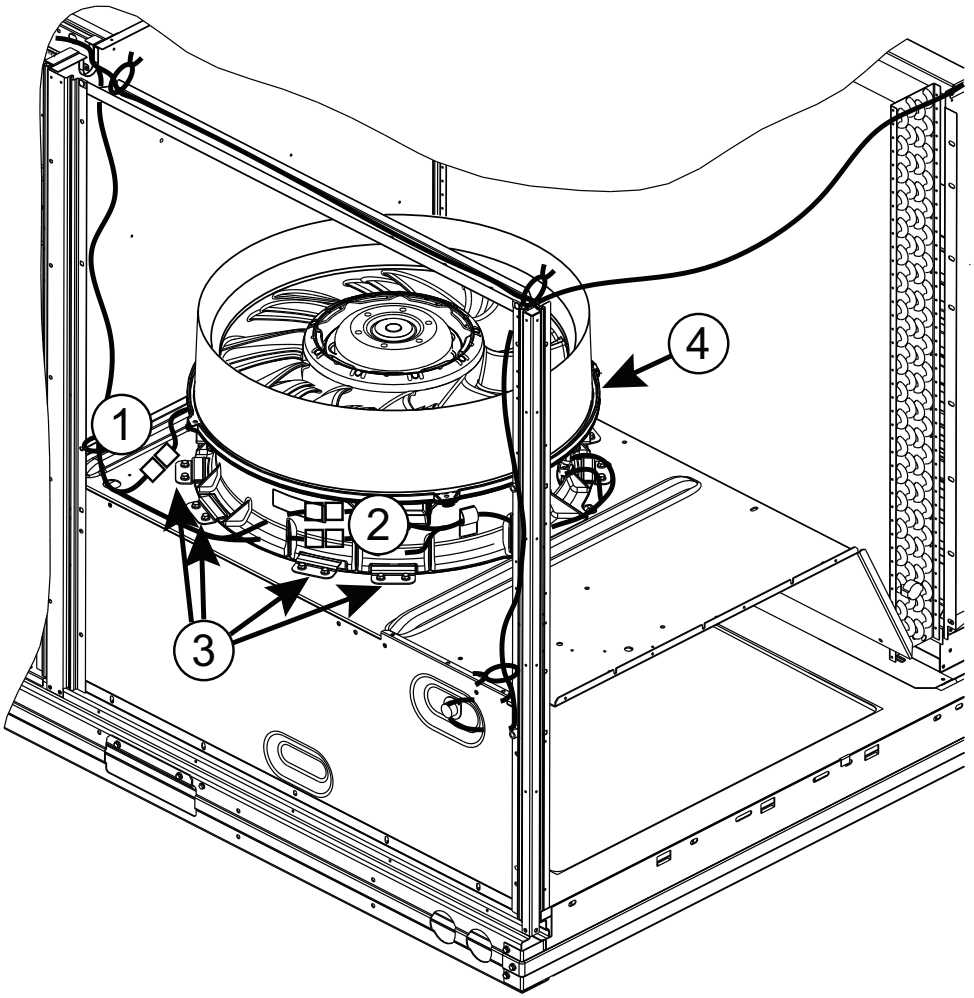

Fig. 12 — Fan Assembly Removal

Disassembling Standard/Medium Motor and Fan Assembly

See Fig. 13.

NOTE: Refer to "Model Number Nomenclature" on page 61, position 13 for specific unit requirements.

1. Remove 4 screws from U-clips in fan casing.
2. Remove casing from assembly.
3. Remove 3 screws connecting rotor to motor flange.
4. Remove rotor from motor.
5. Remove 4 screws connecting motor to stator.
6. Remove stator from motor.
7. If required, remove fan limit switch from stator.

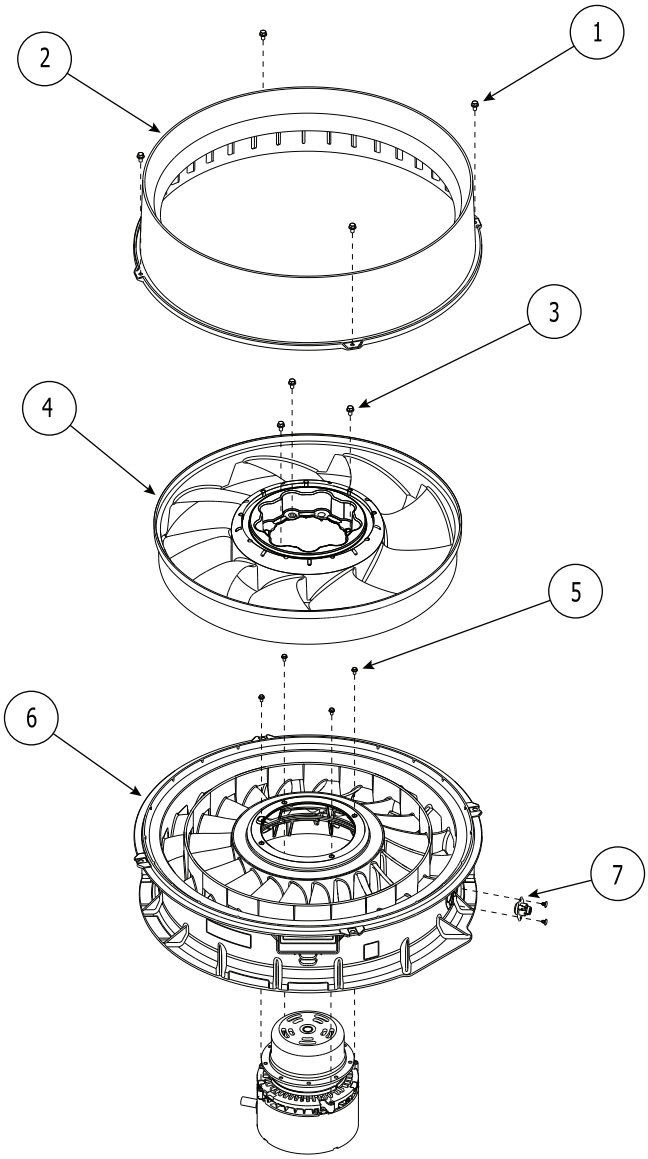

Fig. 13 — Disassembling Standard or Medium Static Motor and Fan Assembly

Disassembling High Static Motor and Fan Assembly

See Fig. 14.

NOTE: Refer to "Model Number Nomenclature" on page 61, position 13 for specific unit requirements.

1. Remove 4 screws from U-clips in fan casing.
2. Remove casing from assembly.
3. Remove 3 screws connecting rotor to motor flange.
4. Remove rotor from motor.
5. Remove 6 screws connecting motor to stator.
6. Remove motor from stator.
7. If required, remove fan limit switch from stator.

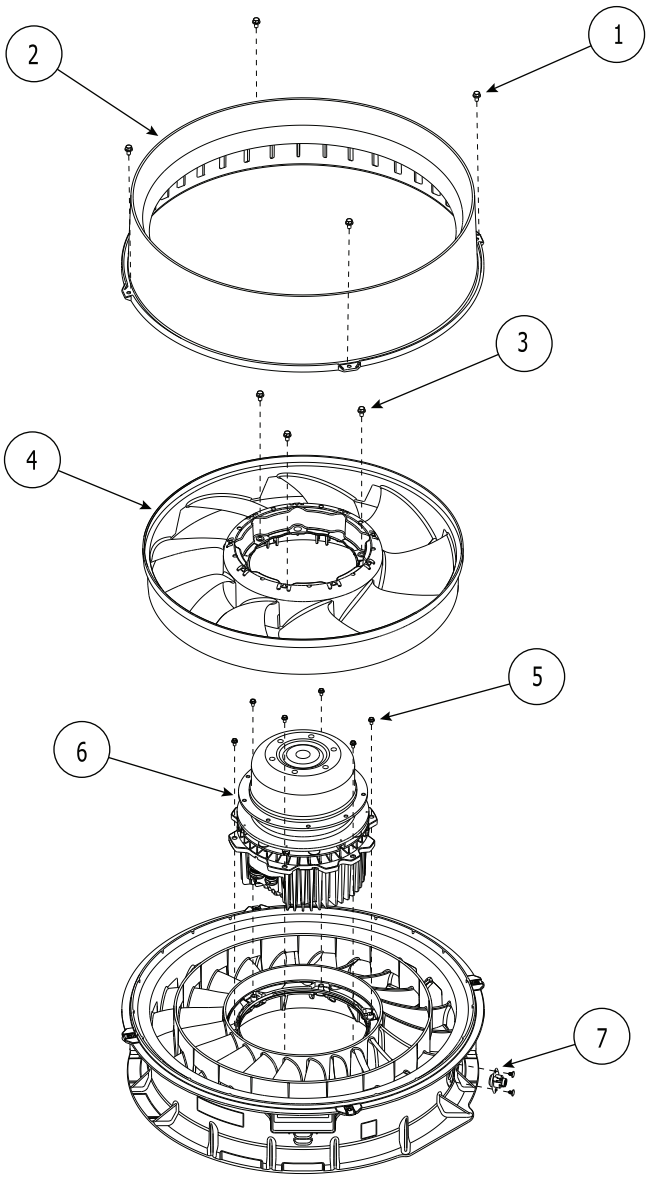

Fig. 14 — Disassembling High Static Motor and Fan Assembly

Reassembly of Standard/Medium Motor and Fan Assembly

See Fig. 15.

NOTE: Refer to "Model Number Nomenclature" on page 61, position 13 for specific unit requirements.

1. Place motor on flat surface.
2. If required, reinstall limit switch on stator with two plastic fastener plugs (P/N: 48TM005675).
3. Line up keying features on stator and motor and set stator onto motor. Install four 1/4-20 x 1-in. screws (P/N: AC67AP170) to attach stator to motor. Tighten to 50 in.-lb (5.65 Nm).
4. Set rotor onto motor flange. Install three 1/4-20 x 1-in. screws (P/N: AC67AP170) to attach rotor to motor. Tighten to 50 in.-lb (5.65 Nm).
5. Set casing onto stator. Install four #10-16 x 3/4-in. screws (P/N: AP13AD128) through U-Clips in casing. Tighten to 14 in.-lb (1.58 Nm).
6. Pull motor harness out through guide feature in stator if not already completed.

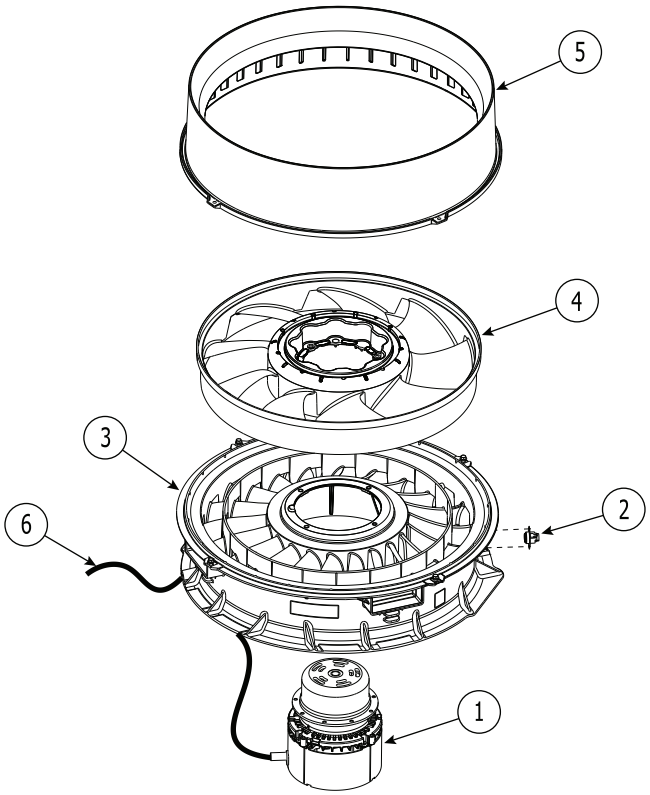

Fig. 15 — Standard/Medium Fan System Re-Assembly

Reassembly of High Static Motor and Fan Assembly

See Fig. 16.

NOTE: Refer to "Model Number Nomenclature" on page 61, position 13 for specific unit requirements.

1. Place stator on flat surface.
2. If required, reinstall limit switch on stator with two plastic fastener plugs (P/N: 48TM005675).
3. Line up keying features on stator and motor and set motor onto stator. Motor wire Harness should align with guide feature in stator. Install six 1/4-20 x 1-in. screws (P/N: AC67AP170) to attach stator to motor. Tighten to 30 in.-lb (3.39 Nm).
4. Set rotor onto motor flange. Install three 1/4-20 x 1-in. screws (P/N: AC67AP170) to attach rotor to motor. Tighten to 50 in.-lb (5.65 Nm).
5. Set casing onto stator. Install four #10-16 x 3/4-in. screws (P/N: AP13AD128) through U-Clips in casing. Tighten to 14 in.-lb (1.58 Nm).
6. Pull motor harness out through guide feature in stator if not already completed.

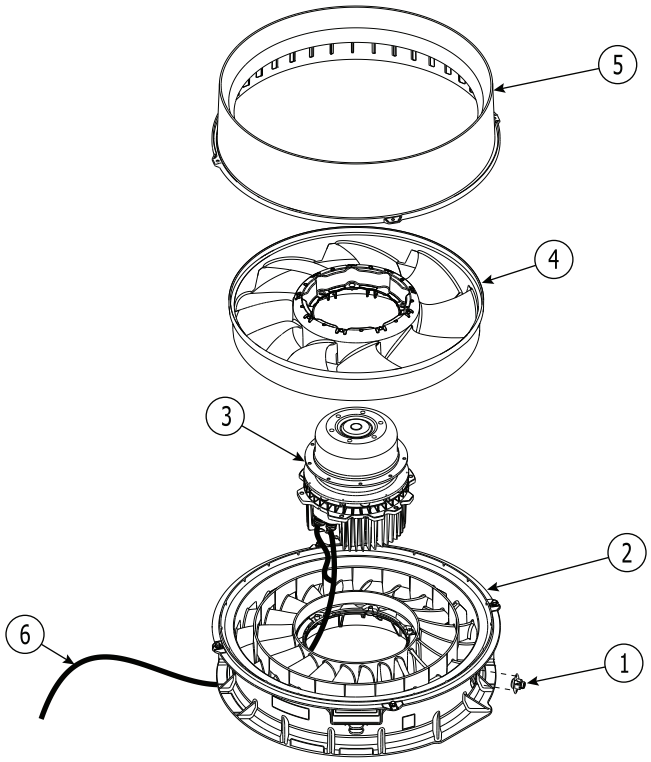

Fig. 16 — High Static Fan System Re-Assembly

Reinstalling Motor and Fan Assembly

See Fig. 17.

1. Align motor harness/grommet at ~7 o'clock (facing installer) and align the bottom flats on right and left sides of fan stator with fan deck ribs. Drop fan assembly down into fan deck opening and slide back until aluminum stator is under the rear fan deck brackets.
2. Align (if necessary) two front holes and fasten stator to fan deck with 8 #10 x 5/8-in. hex head screws (P/N: AL48AM217). Tighten to 50 in.-lb (5.65 Nm).
3. Reconnect wires for stator temperature limit switch.
4. Pull motor harness tight through grommet and plug it in to the control box harness and secure in the corner with snap-in wire tie.

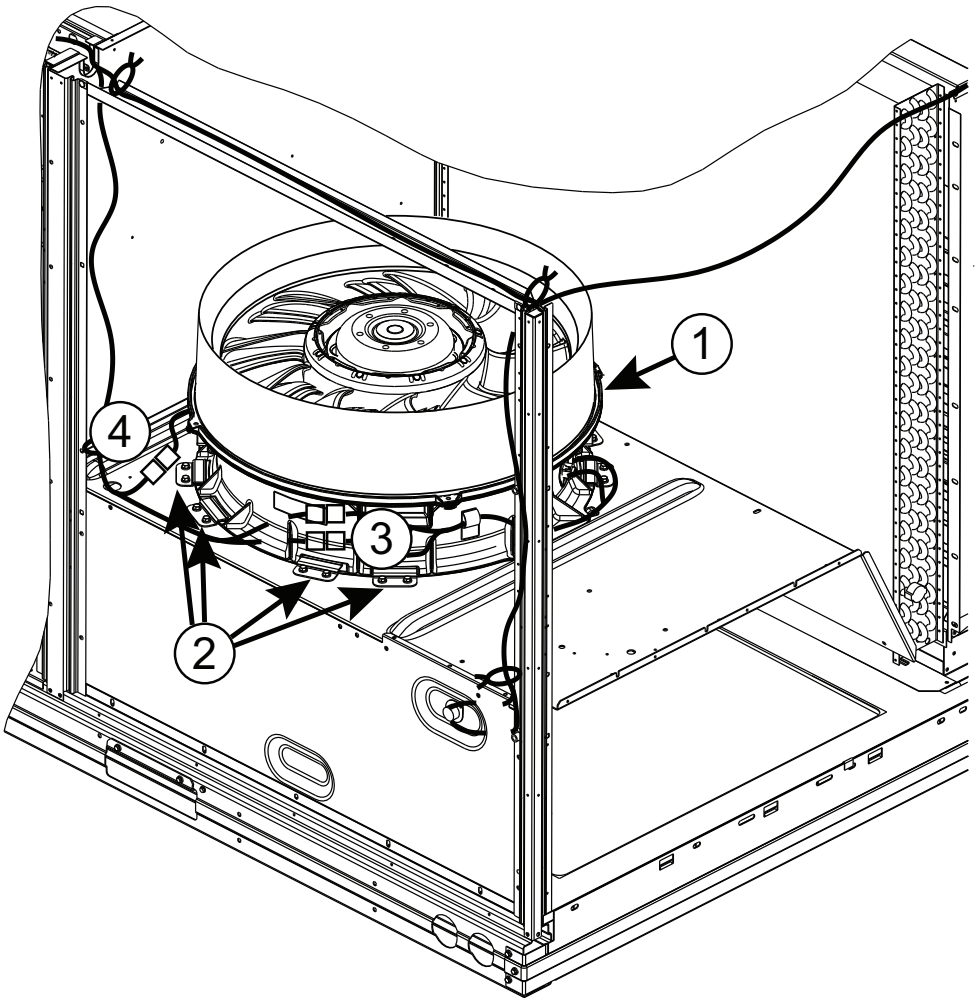

Fig. 17 — Fan Assembly Installation

2-Speed Indoor Fan Motor

All 559K units with Axion™ Fan Technology come factory set to automatically adjust the indoor fan motor speed in sequence with the unit's ventilation, cooling, and heating operation. See Table 1 for fan operation for various modes.

Table 1 — Percentage of Vdc Setting

UNIT	HIGH COOL	HEAT	LOW COOL	VENT
559K*08	100%	100%	60%	60%
559K*09	100%	100%	50%	50%
559K*12	100%	100%	60%	60%
559K*14	100%	100%	60%	60%
559K*16	100%	100%	66%	66%

COOLING

⚠ WARNING

UNIT OPERATION AND SAFETY HAZARD

Failure to follow this warning could cause personal injury, death and/or equipment damage.

This system uses Puron® refrigerant which has higher pressures than R-22 and other refrigerants. No other refrigerant may be used in this system. Gauge set, hoses, and recovery system must be designed to handle Puron refrigerant. If unsure about equipment, consult the equipment manufacturer.

Condenser Coil

The condenser coil is fabricated with round tube copper hairpins and plate fins of various materials and/or coatings (see Model Number Nomenclature in Appendix A to identify the materials provided in this unit). The coil may be one-row or composite-type two-row. Composite two-row coils are two single-row coils fabricated with a single return bend end tubesheet.

Condenser Coil Maintenance and Cleaning Recommendation

Routine cleaning of coil surfaces is essential to maintain proper operation of the unit. Elimination of contamination and removal of harmful residues will greatly increase the life of the coil and extend the life of the unit. The following maintenance and cleaning procedures are recommended as part of the routine maintenance activities to extend the life of the coil.

REMOVE SURFACE LOADED FIBERS

Surface loaded fibers or dirt should be removed with a vacuum cleaner. If a vacuum cleaner is not available, a soft non-metallic bristle brush may be used. In either case, the tool should be applied in the direction of the fins. Coil surfaces can be easily damaged (fin edges can be easily bent over and damage to the coating of a protected coil) if the tool is applied across the fins.

NOTE: Use of a water stream, such as a garden hose, against a surface loaded coil will drive the fibers and dirt into the coil. This will make cleaning efforts more difficult. Surface loaded fibers must be completely removed prior to using low velocity clean water rinse.

PERIODIC CLEAN WATER RINSE

A periodic clean water rinse is very beneficial for coils that are applied in coastal or industrial environments. However, it is very important that the water rinse is made with a very low velocity water stream to avoid damaging the fin edges. Monthly cleaning as described below is recommended. Rinsing coils in the opposite direction of airflow is recommended.

ROUTINE CLEANING OF COIL SURFACES

Periodic cleaning with Totaline® environmentally balanced coil cleaner is essential to extend the life of coils. This cleaner is available from Replacement Components Division as part number P902-0301 for a one gallon container, and part number P902-0305 for a 5 gallon container. It is recommended that all coils, including standard aluminum, pre-coated, copper/copper or e-coated coils be cleaned with the Totaline environmentally balanced coil cleaner as described below. Coil cleaning should be part of the unit's regularly scheduled maintenance procedures to ensure long life of the coil. Failure to clean the coils may result in reduced durability in the environment.

Avoid use of:

- coil brighteners
- acid cleaning prior to painting
- high pressure washers
- poor quality water for cleaning

Totaline environmentally balanced coil cleaner is nonflammable, hypo-allergenic, non-bacterial, and a USDA accepted biodegradable agent that will not harm the coil or surrounding components such as electrical wiring, painted metal surfaces, or insulation. Use of non-recommended coil cleaners is strongly discouraged since coil and unit durability could be affected.

Clean coil as follows:

1. Turn off unit power, tag disconnect.
2. Remove all screws from the top panel except the screws securing the condenser fan to the top panel. See Fig. 18.

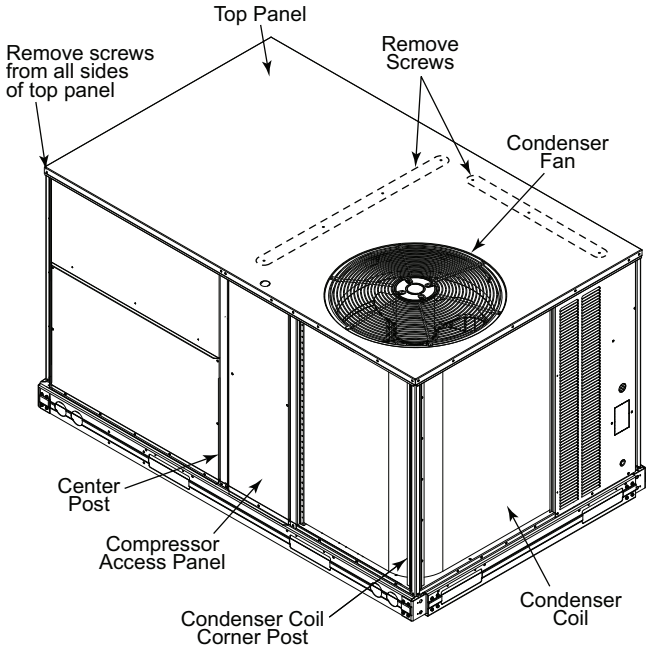

Fig. 18 — Location of Screws and Coil Corner Post

3. Remove condenser coil corner post. See Fig. 18. To hold top panel open, place coil corner post between top panel and center post. See Fig. 19.

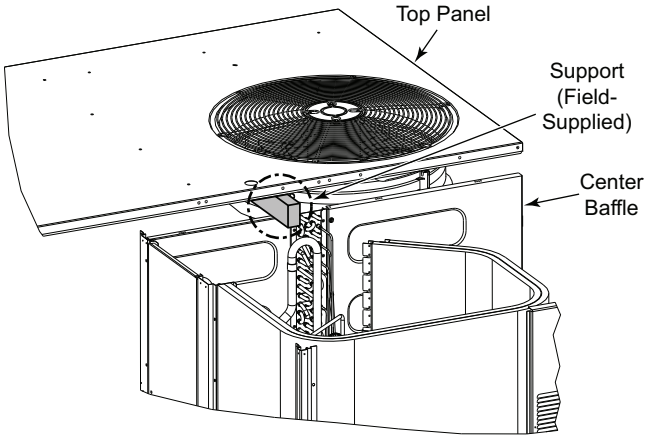

Fig. 19 — Propping Up Top Panel

4. Remove the compressor access panel to access the lower coil clip. The condenser coil corner post may also be removed.
5. Remove the screws from both sides of the 4 coil retaining clips on the hairpin end of the coil tube sheets. See Fig. 20.
6. Remove the 4 retaining clips.

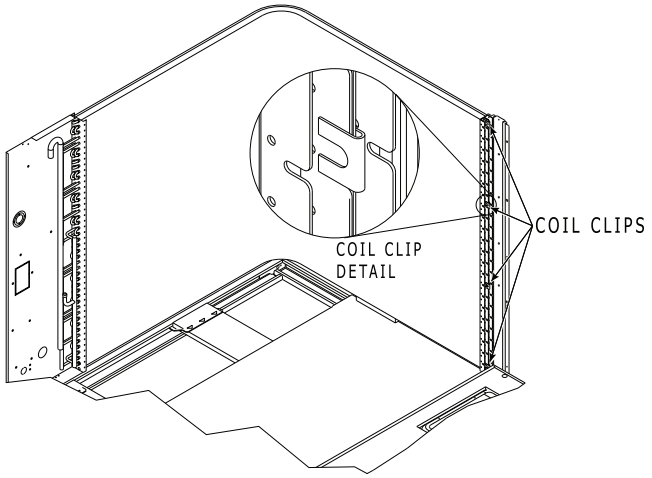

Fig. 20 — Condenser Coil Clips

7. Draw the inner coil inward to separate the coils for cleaning.
8. Insert a spacer (field-supplied) between the tube sheets to hold the coils apart. See Fig. 21.
9. Clean the outer coil surface to remove surface loaded fibers or dirt. See "Remove Surface Loaded Fibers" on page 12 for details.
10. Use a water hose or other suitable equipment to flush down between the 2 coil sections to remove dirt and debris. If a coil cleaner is used be sure to rinse the coils completely before reassembly.
11. Move the inner coil back into position. Reinstall the 4 coil clips. Reinstall the top panel and replace all screws.

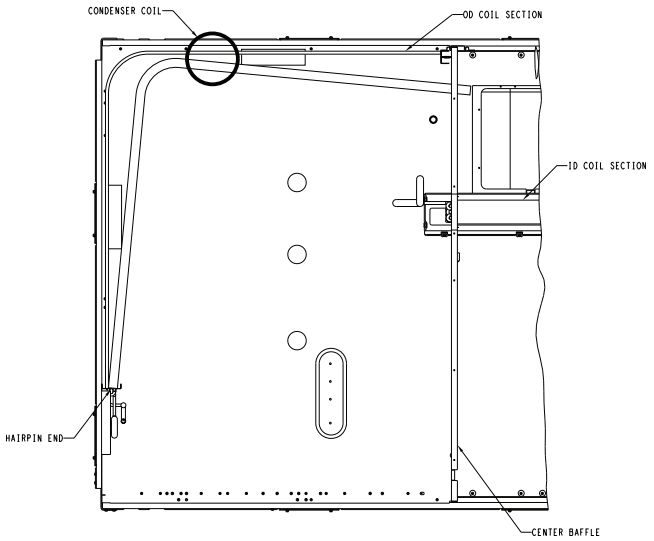

Fig. 21 — Separating Coil Sections (Top View)

⚠ CAUTION

UNIT DAMAGE HAZARD

Failure to follow this caution may result in reduced unit performance or unit shutdown.

High velocity water from a pressure washer or garden hose, or compressed air should never be used to clean a coil. The force of the water or air jet will bend the fin edges and increase airside pressure drop.

⚠ CAUTION

UNIT DAMAGE HAZARD

Failure to follow this caution may result in accelerated corrosion of unit parts.

Harsh chemicals, household bleach or acid or basic cleaners should not be used to clean outdoor or indoor coils of any kind. These cleaners can be very difficult to rinse out of the coil and can accelerate corrosion at the fin/tube interface where dissimilar materials are in contact. If there is dirt below the surface of the coil, use the Totaline environmentally balanced coil cleaner.

Totaline Environmentally Balanced Coil Cleaner Application Equipment

- 2-1/2 gallon garden sprayer
- Water rinse with low velocity spray nozzle

Totaline Environmentally Balanced Coil Cleaner Application Instructions

1. Proper eye protection such as safety glasses is recommended during mixing and application.
2. Remove all surface loaded fibers and dirt with a vacuum cleaner as described above.
3. Thoroughly wet finned surfaces with clean water and a low velocity garden hose, being careful not to bend fins.
4. Mix Totaline environmentally balanced coil cleaner in a 2-1/2 gallon garden sprayer according to the instructions included with the cleaner. The optimum solution temperature is 100°F.

   NOTE: Do NOT USE water in excess of 130°F, as the enzymatic activity will be destroyed.

5. Thoroughly apply Totaline environmentally balanced coil cleaner solution to all coil surfaces including finned area, tube sheets and coil headers.
6. Hold garden sprayer nozzle close to finned areas and apply cleaner with a vertical, up-and-down motion. Avoid spraying in horizontal pattern to minimize potential for fin damage.
7. Ensure cleaner thoroughly penetrates deep into finned areas. Interior and exterior finned areas must be thoroughly cleaned. Finned surfaces should remain wet with cleaning solution for 10 minutes. Ensure surfaces are not allowed to dry before rinsing. Reapply cleaner as needed to ensure 10-minute saturation is achieved.
8. Thoroughly rinse all surfaces with low velocity clean water using downward rinsing motion of water spray nozzle. Protect fins from damage from the spray nozzle.

Evaporator Coil

Cleaning the Evaporator Coil

1. Turn unit power off. Install lockout tag. Remove evaporator coil access panel.
2. If economizer or two-position damper is installed, remove economizer by disconnecting Molex®[1] plug and removing mounting screws.
3. Slide filters out of unit.
4. Clean coil using a commercial coil cleaner or dishwasher detergent in a pressurized spray canister. Wash both sides of coil and flush with clean water. For best results, back-flush toward return-air section to remove foreign material. Flush condensate pan after completion.
5. Reinstall economizer and filters.
6. Reconnect wiring.
7. Replace access panels.

Evaporator Coil Metering Devices

559K*08-16 units with or without the Perfect Humidity™ option use a TXV-distributer system.

THERMOSTATIC EXPANSION VALVE (TXV)

All 559K*08-16 units equipped with the Perfect Humidity option include TXV control. The TXV is a bi-flow, bleed port expansion valve with an external equalizer. The TXVs are specifically designed to operate with Puron® refrigerant. Use only factory-authorized TXVs.

TXV Operation

The TXV is a metering device that is used in air conditioning and heat pump systems to adjust to the changing load conditions by maintaining a preset superheat temperature at the outlet of the evaporator coil.

The volume of refrigerant metered through the valve seat is dependent upon the following:

1. Superheat temperature is sensed by cap tube sensing bulb on suction tube at outlet of evaporator coil. This temperature is converted into pressure by refrigerant in the bulb pushing downward on the diaphragm, which opens the valve using the push rods.
2. The suction pressure at the outlet of the evaporator coil is transferred through the external equalizer tube to the underside of the diaphragm.
3. The pin is spring loaded, which exerts pressure on the underside of the diaphragm. Therefore, the bulb pressure works against the spring pressure and evaporator suction pressure to open the valve. If the load increases, the temperature increases at the bulb, which increases the pressure on the top side of the diaphragm. This opens the valve and increases the flow of refrigerant. The increased refrigerant flow causes the leaving evaporator temperature to decrease. This lowers the pressure on the diaphragm and closes the pin. The refrigerant flow is effectively stabilized to the load demand with negligible change in superheat.

Replacing TXV

1. Recover refrigerant.
2. Remove TXV support clamp using a 5/l6-in. nut driver.
3. Remove TXV using a wrench and an additional wrench on connections to prevent damage to tubing.
4. Remove equalizer tube from suction line of coil. Use file or tubing cutter to cut brazed equalizer line approximately 2 inches above suction tube.
5. Remove bulb from vapor tube inside cabinet.
6. Install the new TXV using a wrench and an additional wrench on connections to prevent damage to tubing while attaching TXV to distributor.
7. Attach the equalizer tube to the suction line. If the coil has a mechanical connection, then use a wrench and an additional wrench on connections to prevent damage. If the coil has a brazed connection, use a file or a tubing cutter to remove the mechanical flare nut from the equalizer line. Then use a new coupling to braze the equalizer line to the stub (previous equalizer line) in suction line.
8. Attach TXV bulb in the same location where the original (in the sensing bulb indent) was when it was removed, using the supplied bulb clamps. See Fig. 22 on page 15.
9. Route equalizer tube through suction connection opening (large hole) in fitting panel and install fitting panel in place.
10. Sweat the inlet of TXV marked “IN” to the liquid line. Avoid excessive heat which could damage the TXV valve. Use quenching cloth when applying heat anywhere on TXV.

Refrigerant System Pressure Access Ports

There are two access ports in the system: on the suction tube near the compressor and on the discharge tube near the compressor. These are brass fittings with black plastic caps. The hose connection fittings are standard 1/4-in. SAE male flare couplings.

The brass fittings are two-piece high flow valves, with a receptacle base brazed to the tubing and an integral spring-closed check valve core screwed into the base. See Fig. 23. This check valve is permanently assembled into this core body and cannot be serviced separately; replace the entire core body if necessary. Service tools are available from RCD that allow the replacement of the check valve core without having to recover the entire system refrigerant charge. Apply compressor refrigerant oil to the check valve core’s bottom o-ring. Install the fitting body with 96 ± 10 in.-lb (10.85 ± 1.1 Nm) of torque; do not over-tighten.

1. Third-party trademarks and logos are the property of their respective owners.

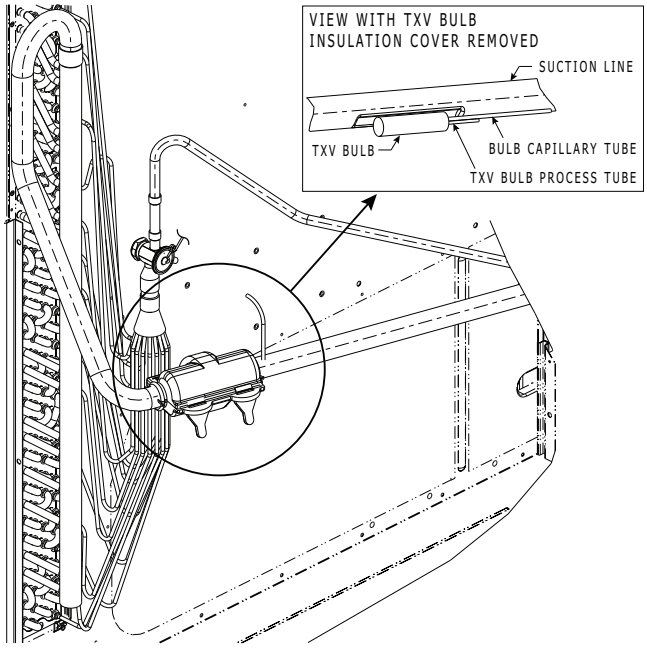

Fig. 22 — TXV Valve and Sensing Bulb Location

PURON (R-410A) REFRIGERANT

This unit is designed for use with Puron® (R-410A) refrigerant. Do not use any other refrigerant in this system.

Puron (R-410A) refrigerant is provided in pink (rose) colored cylinders. These cylinders are available with and without dip tubes; cylinders with dip tubes will have a label indicating this feature. For a cylinder with a dip tube, place the cylinder in the upright position (access valve at the top) when removing liquid refrigerant for charging. For a cylinder without a dip tube, invert the cylinder (access valve on the bottom) when removing liquid refrigerant.

Because Puron (R-410A) refrigerant is a blend, it is strongly recommended that refrigerant always be removed from the cylinder as a liquid. Admit liquid refrigerant into the system in the discharge line. If adding refrigerant into the suction line, use a commercial metering/expansion device at the gauge manifold; remove liquid from the cylinder, pass it through the metering device at the gauge set and then pass it into the suction line as a vapor. Do not remove Puron (R-410A) refrigerant from the cylinder as a vapor.

Refrigerant Charge

Amount of refrigerant charge is listed on the unit's nameplate. Refer to *Bryant GTAC2-5 Charging, Recovery, Recycling and Reclamation* training manual and the following procedures.

Unit panels must be in place when unit is operating during the charging procedure.

NO CHARGE

Use standard evacuating techniques. After evacuating system, weigh in the specified amount of refrigerant.

LOW-CHARGE COOLING

Using Cooling Charging Charts, Fig. 24-28, vary refrigerant until the conditions of the appropriate chart are met. Note the charging charts are different from type normally used. Charts are based on charging the units to the correct sub-cooling for the various operating conditions. Accurate pressure gauge and temperature sensing device are required. Connect the pressure gauge to the service port on the liquid line. Mount the temperature sensing device on the liquid line and insulate it so that outdoor ambient temperature does not affect the reading. Indoor-air cfm must be within the normal operating range of the unit.

UNIT SIZE DESIGNATION	NOMINAL TONS REFERENCE
559K*08	7.5
559K*09	8.5
559K*12	10.0
559K*14	12.5
559K*16	15.0

EXAMPLE:

Model. 559K*08

Outdoor Temperature . . . . . .85°F (29°C)

Suction Pressure . . . . . 140 psig (965 kPa)

Suction Temperature should be . . . . . .65°F (18°C)

USING COOLING CHARGING CHARTS

Take the outdoor ambient temperature and read the liquid pressure gauge. Refer to chart to determine what liquid temperature should be. If liquid temperature is low, add refrigerant. If liquid temperature is high, carefully recover some of the charge. Recheck the liquid pressure as charge is adjusted.

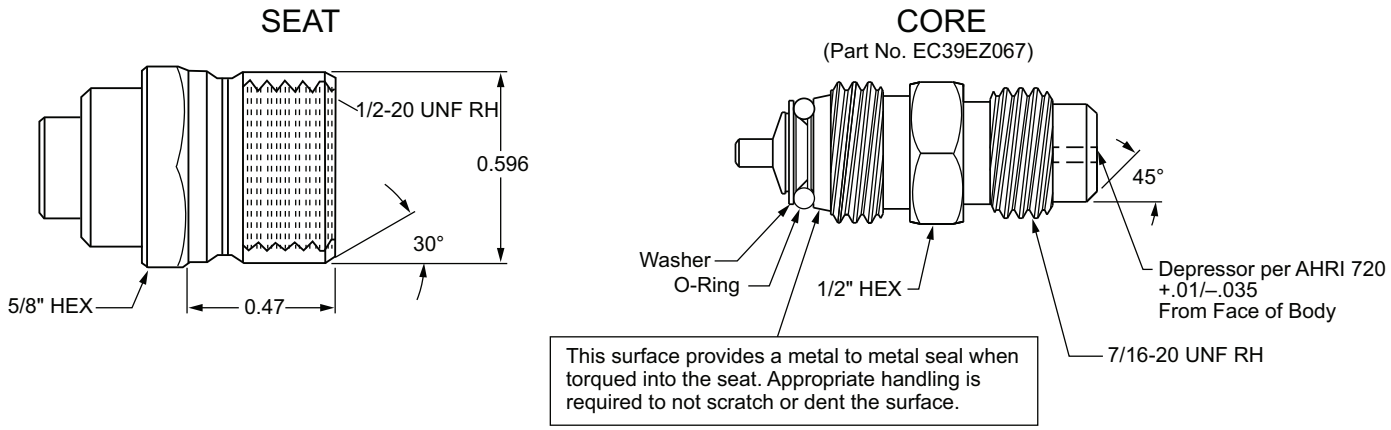

Fig. 23 — CoreMax™[1] Access Port Assembly

1. Third-party trademarks and logos are the property of their respective owners.

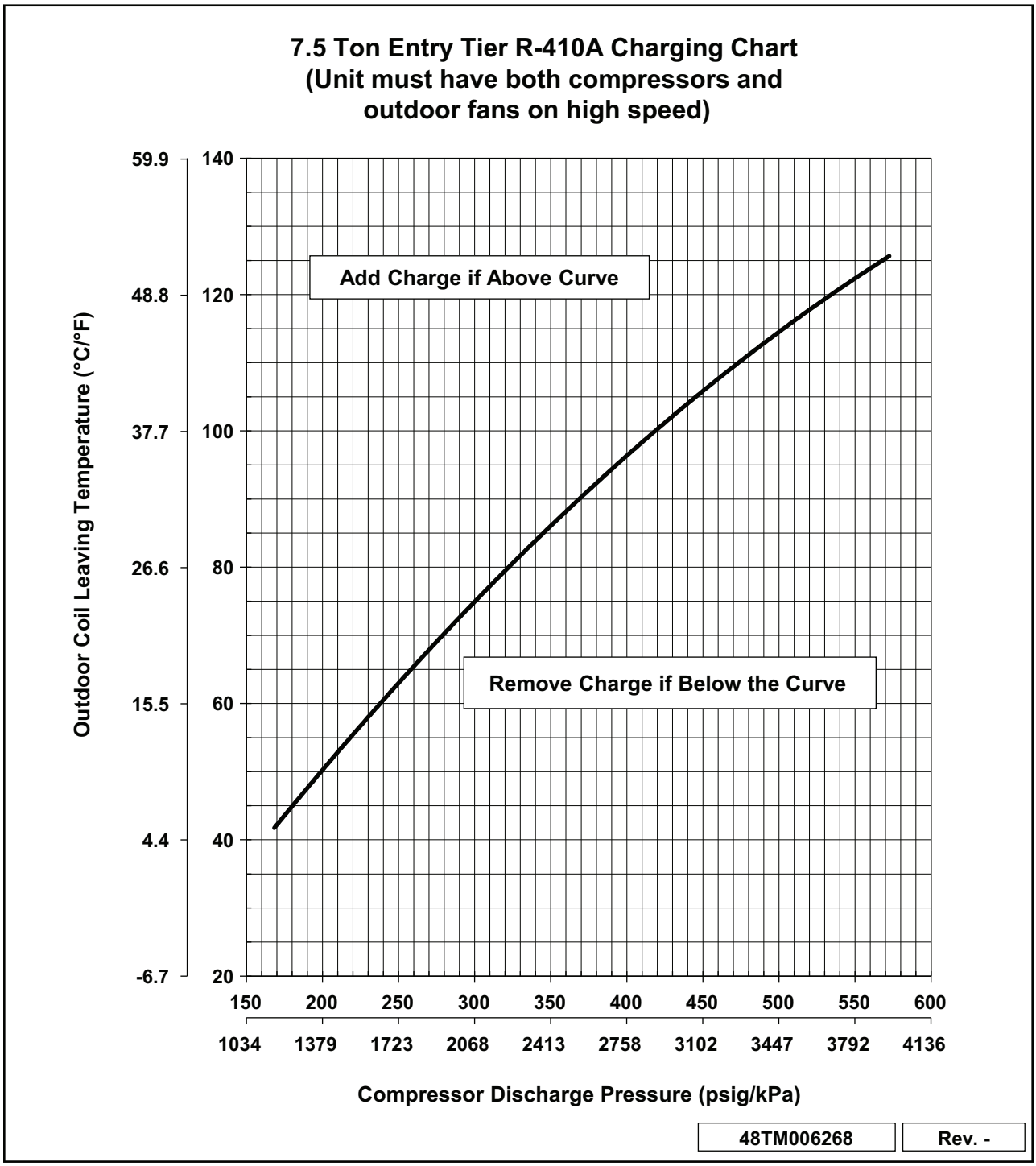

Fig. 24 — Cooling Charging Chart - 7.5 Ton

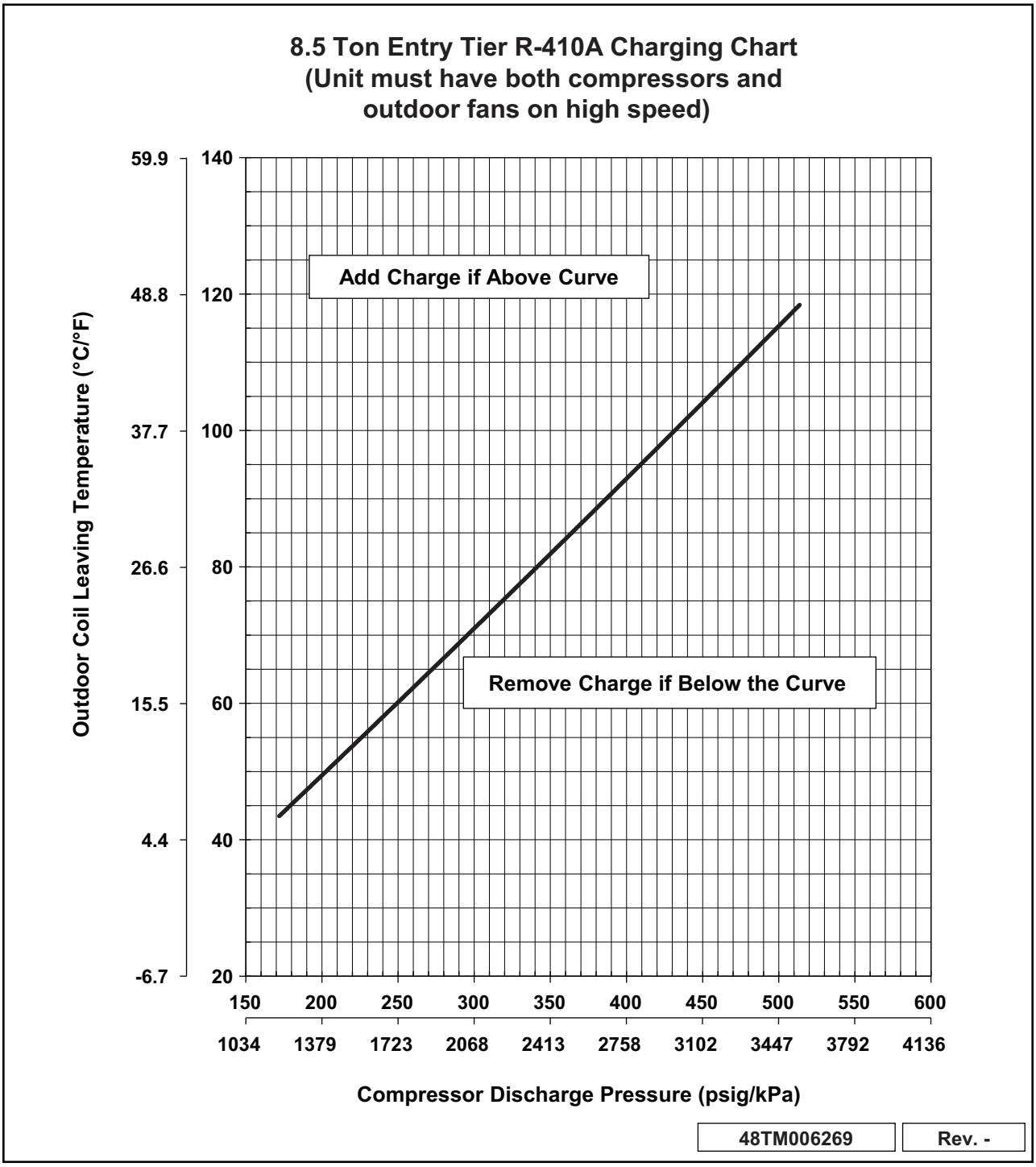

Fig. 25 — Cooling Charging Chart - 8.5 Ton

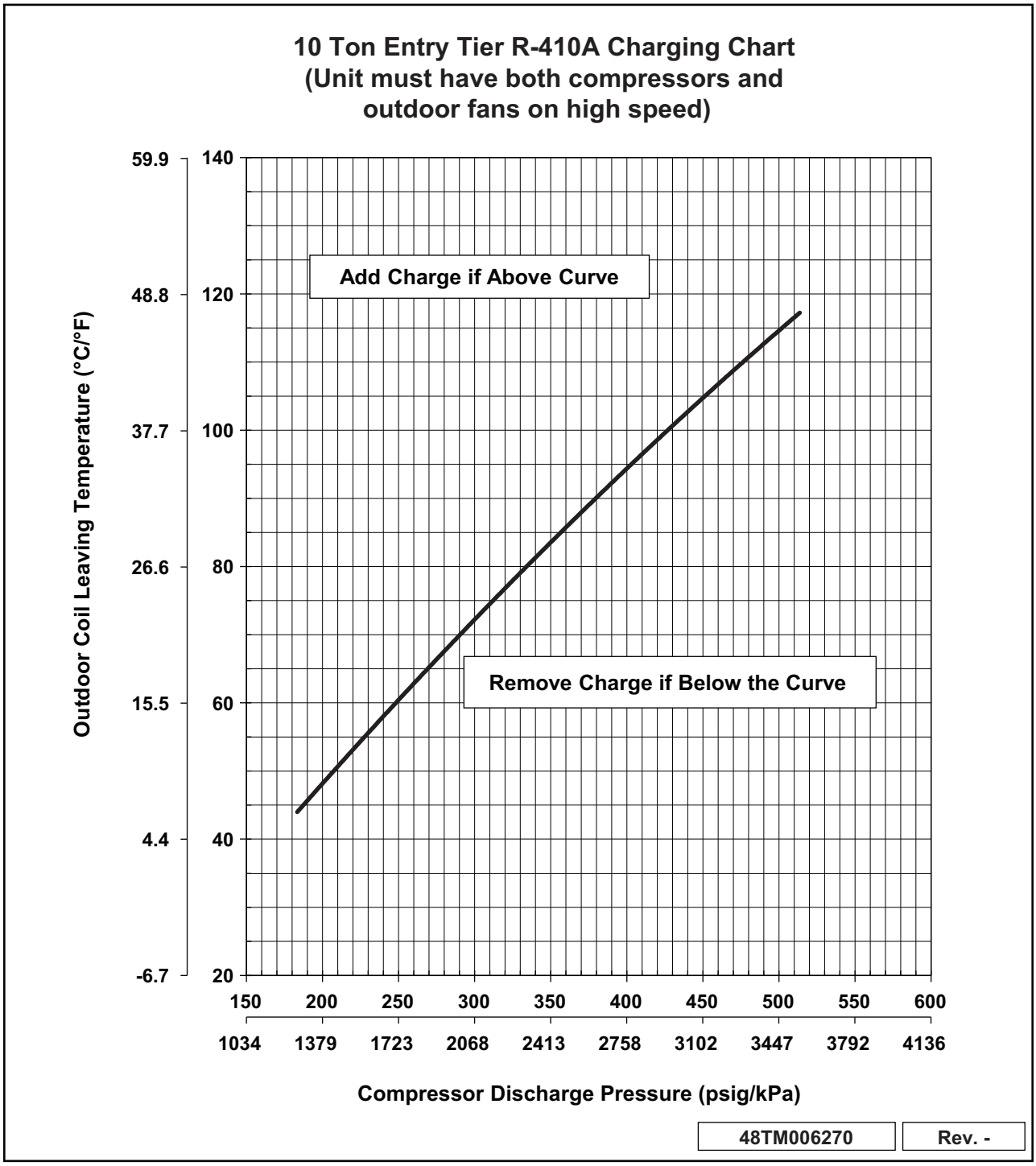

Fig. 26 — Cooling Charging Chart - 10 Ton

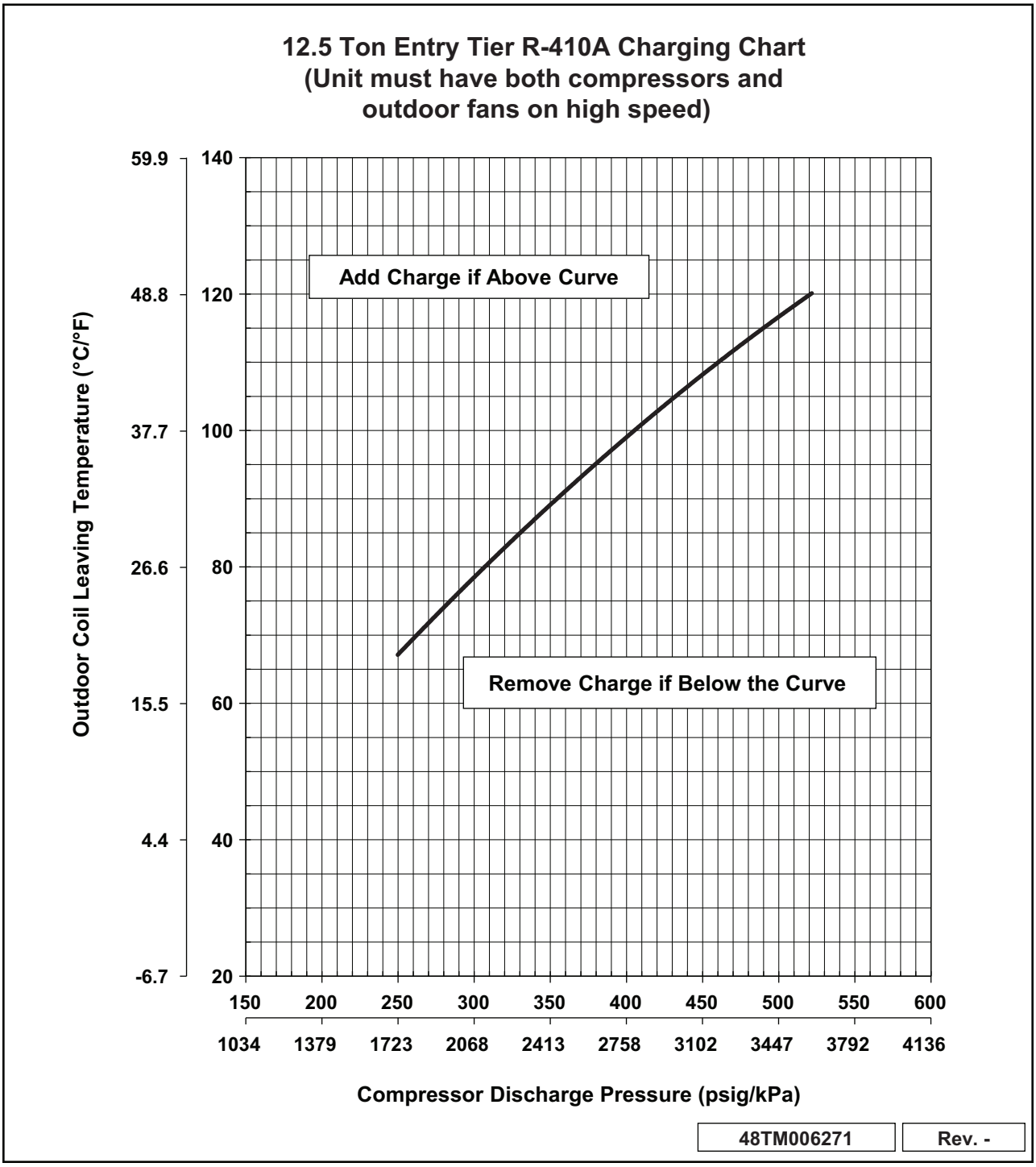

Fig. 27 — Cooling Charging Chart - 12.5 Ton

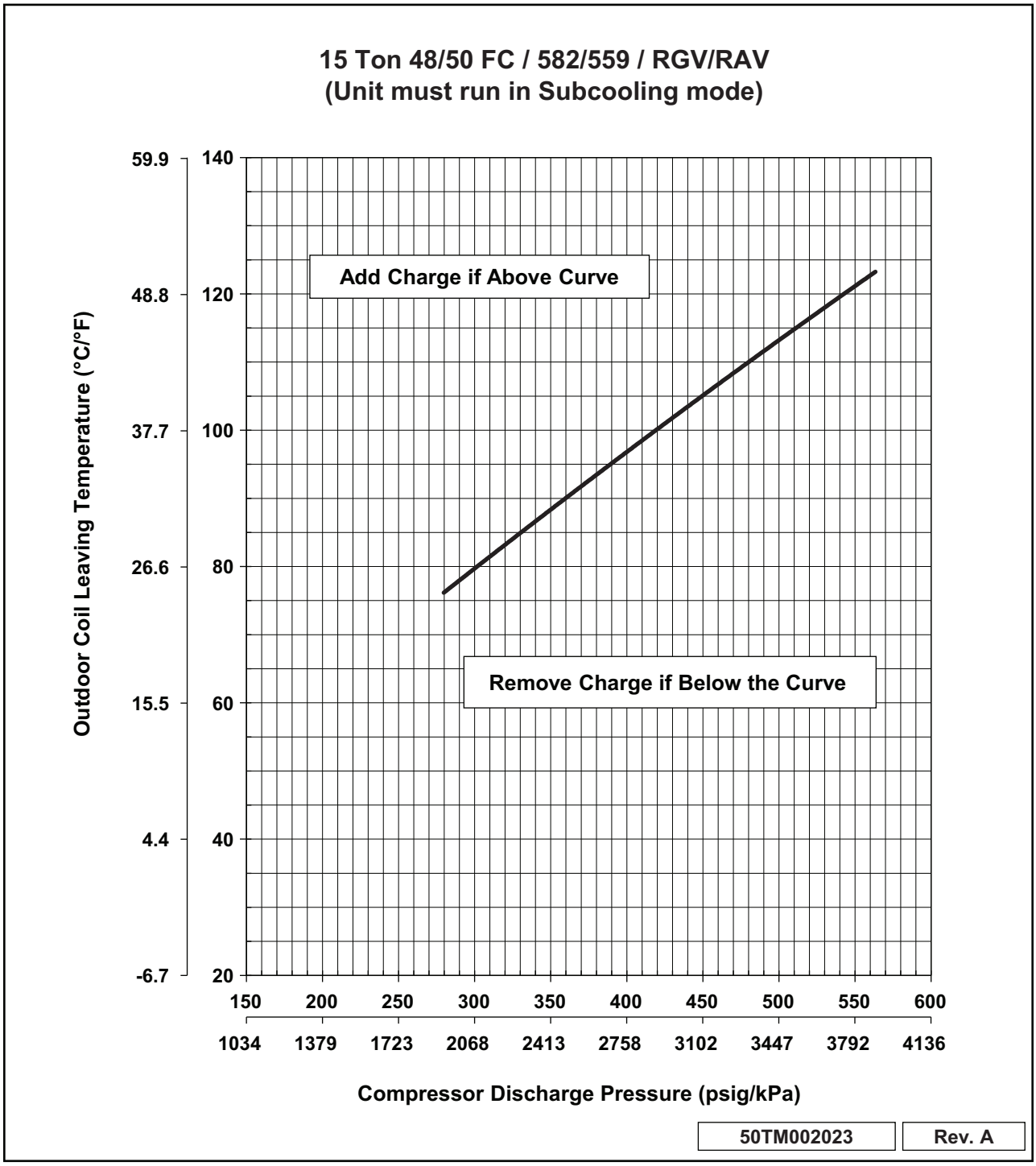

Fig. 28 — Cooling Charging Chart - 15 Ton

COMPRESSOR

Lubrication

The compressor is charged with the correct amount of oil at the factory.

⚠ CAUTION

UNIT DAMAGE HAZARD

Failure to follow this caution may result in damage to components.

The compressor is in a Puron® refrigerant system and uses a polyolester (POE) oil. This oil is extremely hygroscopic, meaning it absorbs water readily. POE oils can absorb 15 times as much water as other oils designed for HCFC and CFC refrigerants. Avoid exposure of the oil to the atmosphere.

⚠ WARNING

FIRE, EXPLOSION HAZARD

Failure to follow this warning could result in death, serious personal injury and/or property damage.

Never use air or gases containing oxygen for leak testing or for operating refrigerant compressors. Pressurized mixtures of air or gases containing oxygen can lead to an explosion.

⚠ WARNING

FIRE, EXPLOSION HAZARD

Failure to follow this warning could result in death, serious personal injury and/or property damage.

Never use non-certified refrigerants in this product. Non-certified refrigerants could contain contaminates that could lead to unsafe operating conditions. Use ONLY refrigerants that conform to AHRI Standard 700.

Replacing Compressor

NOTE: Only factory-trained service technicians should remove and replace compressor units.

⚠ CAUTION

INSTALLATION SITE DAMAGE

Failure to follow this caution can result in damage to equipment location site.

Puron (R-410A) refrigerant contains polyolester (POE) oil that can damage the roof membrane. Caution should be taken to prevent POE oil from spilling onto the roof surface.

The factory also recommends that the suction and discharge lines be cut with a tubing cutter instead of using a torch to remove brazed fittings.

Compressor Rotation

⚠ CAUTION

EQUIPMENT DAMAGE HAZARD

Failure to follow this caution can result in premature wear and damage to equipment.

Scroll compressors can only compress refrigerant if rotating in the right direction. Reverse rotation for extended times can result in internal damage to the compressor. Scroll compressors are sealed units and cannot be repaired on site location.

NOTE: When the compressor is rotating in the wrong direction, the unit makes an elevated level of noise and does not provide cooling.

On 3-phase units with scroll compressors, it is important to be certain compressor is rotating in the proper direction. To determine whether or not compressor is rotating in the proper direction:

1. Connect service gauges to suction and discharge pressure fittings.
2. Energize the compressor.
3. The suction pressure should drop and the discharge pressure should rise, as is normal on any start-up.
4. If the suction pressure does not drop and the discharge pressure does not rise to normal levels, the evaporator fan is probably also rotating in the wrong direction.
5. Turn off power to the unit.
6. Reverse any two of the three unit power leads.
7. Reapply electrical power to the compressor. The suction pressure should drop and the discharge pressure should rise which is normal for scroll compressors on start-up.
8. Replace compressor if suction/discharge pressures are not within specifications for the specific compressor.

The suction and discharge pressure levels should now move to their normal start-up levels.

Filter Drier

Replace whenever refrigerant system is exposed to atmosphere. Only use factory specified liquid-line filter driers with working pressures no less than 650 psig (4482 kPa).

⚠ CAUTION

EQUIPMENT DAMAGE

Failure to follow this caution can result in equipment damage.

Do not install a suction-line filter drier in liquid line. A liquid-line filter drier designed for use with R-410A refrigerant is required on every unit.

Condenser-Fan Adjustment

1. Shut off unit power supply. Install lockout tag.
2. Remove condenser-fan assembly (grille, motor, and fan). See Fig. 29.
3. Loosen fan hub setscrews.
4. Adjust fan height by pushing fan until it stops on the fan shaft.
5. Tighten set screw to 84 in.-lb (9.5 Nm) ± 12 in.-lb (1.5 Nm).
6. Replace condenser-fan assembly.

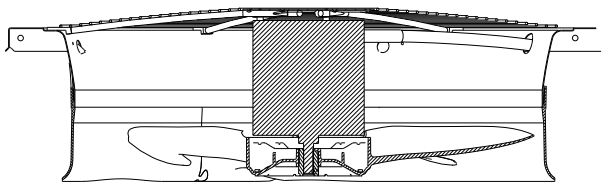

Fig. 29 — Condenser Fan Adjustment

Troubleshooting Cooling System

Refer to Table 2 for additional troubleshooting topics.

Table 2 — Troubleshooting

SYMPTOM	CAUSE	SOLUTION
Compressor and Outdoor Fan Will Not Start	Power failure.	Call power company.
	Fuse blown or circuit breaker tripped.	Replace fuse or reset circuit breaker. Determine root cause.
	Defective thermostat, contactor, transformer. control relay, or capacitor.	Replacement component.
	Insufficient line voltage.	Determine cause and correct.
	Incorrect or faulty wiring.	Check wiring diagram and rewire correctly.
	Thermostat setting too high.	Lower thermostat setting below room temperature.
	High pressure switch tripped.	See problem “Excessive head pressure.”
	Low pressure switch tripped.	Check system for leaks. Repair as necessary.
	Freeze-up protection thermostat tripped.	See problem “Suction pressure too low.”
Compressor Will Not Start but Outdoor Fan Runs	Faulty wiring or loose connections in compressor circuit.	Check wiring and repair or replace.
	Compressor motor burned out, seized, or internal overload open.	Determine cause. Replace compressor or allow enough time for internal overload to cool and reset.
	Defective run/start capacitor, overload, start relay.	Determine cause. Replace compressor or allow enough time for internal overload to cool and reset.
	One leg of 3-phase power dead.	Replace fuse or reset circuit breaker. Determine cause.
Compressor Cycles (Other Than Normally Satisfying Thermostat)	Refrigerant overcharge or undercharge.	Recover refrigerant, evacuate system, and recharge to nameplate.
	Defective compressor.	Replace and determine cause.
	Insufficient line voltage.	Determine cause and correct.
	Blocked outdoor coil or dirty air filter.	Determine cause and correct.
	Defective Run/Start capacitor, overload, start relay.	Determine cause and correct.
	Defective thermostat.	Replace thermostat.
	Faulty outdoor-fan (cooling) or indoor-fan (heating) motor or capacitor.	Replace faulty part.
	Restriction in refrigerant system.	Locate restriction and remove.
	Defective loader plug.	Determine cause and replace.
Compressor Operates Continuously	Dirty air filter.	Replaced filter.
	Unit undersized for load.	Decrease load or increase unit size.
	Thermostat set too low (cooling).	Reset thermostat.
	Low refrigerant charge.	Locate leak; repair and recharge.
	Air in system.	Recover refrigerant, evacuate system, and recharge.
	Outdoor coil dirty or restricted.	Clean coil or remove restriction.
Compressor Makes Excessive Noise	Compressor rotating in the wrong direction.	Reverse the 3-phase power leads as described in Start-Up.
Excessive Head Pressure	Dirty outside.	Replace filter.
	Dirty outdoor coil (cooling).	Clean coil.
	Refrigerant overcharged.	Recover excess refrigerant.
	Air in system.	Recover refrigerant, evacuate system, and recharge.
	Condensing air restricted or air short-cycling.	Determine cause and correct.
Head Pressure Too Low	Low refrigerant charge.	Check for leaks; repair and recharge
	Compressor scroll plates defective.	Replace compressor
	Restriction in liquid tube.	Remove restriction.
Excessive Suction Pressure	High heat load.	Check for source and eliminate.
	Compressor scroll plates defective.	Replace compressor.
	Refrigerant overcharge.	Recover excess refrigerant.
Suction Pressure Too Low	Dirty air filter (cooling).	Replace filter.
	Dirt or heavily iced outdoor coil (heating).	Clean outdoor coil. Check defrost cycle operation.
	Low refrigerant charge.	Check for leaks; repair and recharge.
	Metering device or low side restricted	Remove source of restriction.
	Insufficient indoor airflow (cooling mode).	Increase air quantity. Check filter and replace if necessary.
	Temperature too low in conditioned area.	Reset thermostat.
	Field-installed filter drier restricted.	Replace.
	Outdoor ambient temperature below 25°F (cooling).	Install low-ambient kit.
	Outdoor fan motor(s) not operating (heating).	Check fan motor operation.

CONVENIENCE OUTLETS

⚠ WARNING

ELECTRICAL OPERATION HAZARD

Failure to follow this warning could result in personal injury or death.

Units with convenience outlet circuits may use multiple disconnects. Check convenience outlet for power status before opening unit for service. Locate its disconnect switch, if appropriate, and open it. Tag-out this switch, if necessary.

Convenience Outlets

Two types of convenience outlets are offered on 559K models: non-powered and unit-powered. Both types provide a 125 vac ground-fault circuit-interrupt (GFCI) duplex receptacle rated at 15A behind a hinged waterproof access cover, located on the end panel of the unit. See Fig. 30.

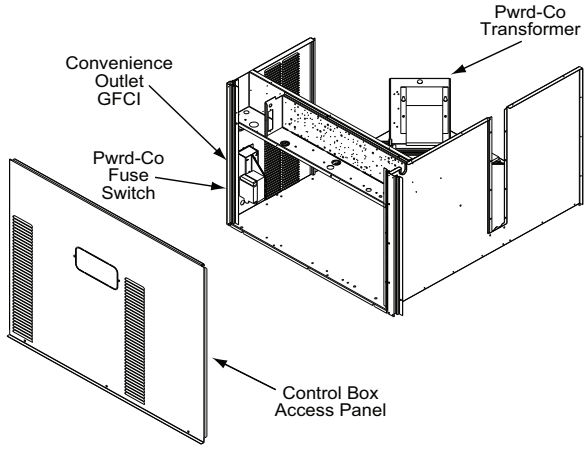

Fig. 30 — Convenience Outlet Location

Installing Weatherproof Cover

A weatherproof while-in-use cover for the factory installed convenience outlets is now required by UL standards. This cover cannot be factory-mounted due to its depth. The cover must be installed at unit installation. For shipment, the convenience outlet is covered with a blank cover plate.

The weatherproof cover kit is shipped in the unit's control box. The kit includes the hinged cover, a backing plate and gasket.

NOTE: DISCONNECT ALL POWER TO UNIT AND CONVENIENCE OUTLET. Use approved lockout/tag-out procedures.

1. Remove the blank cover plate at the convenience outlet; discard the blank cover.
2. Loosen the two screws at the GFCI duplex outlet, until approximately 1/2-in. (13 mm) under screw heads is exposed.
3. Press the gasket over the screw heads. Slip the backing plate over the screw heads at the keyhole slots and align with the gasket; tighten the two screws until snug (do not over-tighten).
4. Mount the weatherproof cover to the backing plate as shown in Fig. 31.
5. Remove two slot fillers in the bottom of the cover to permit service tool cords to exit the cover.
6. Check cover installation for full closing and latching.

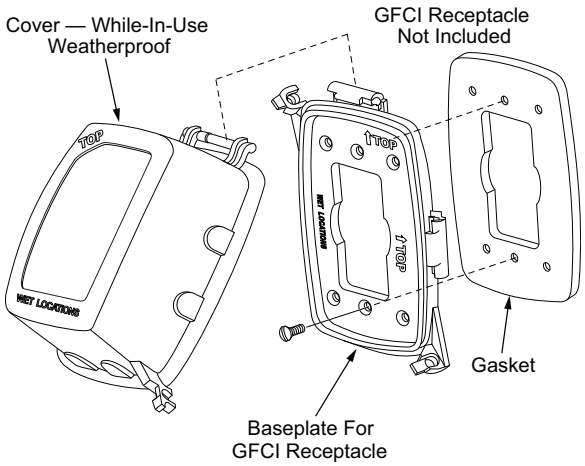

Fig. 31 — Weatherproof Cover Installation

Non-Powered Type

This type requires the field installation of a general-purpose 125-v 15-A circuit powered from a source elsewhere in the building. Observe national and local codes when selecting wire size, fuse or breaker requirements and disconnect switch size and location. Route 125-v power supply conductors into the bottom of the utility box containing the duplex receptacle.

Unit-Powered Type

A unit-mounted transformer is factory-installed to step-down the main power supply voltage to the unit to 115-v at the duplex receptacle. This option also includes a manual switch with fuse, located in a utility box and mounted on a bracket behind the convenience outlet; access is through the unit's control box access panel. See Fig. 30.

The primary leads to the convenience outlet transformer are not factory-connected. Selection of primary power source is a customer option. If local codes permit, the transformer primary leads can be connected at the line-side terminals on a unit-mounted non-fused disconnect breaker switch; this will provide service power to the unit when the unit disconnect switch is open. Other connection methods will result in the convenience outlet circuit being de-energized when the unit disconnect switch is open. (See Fig. 32.)

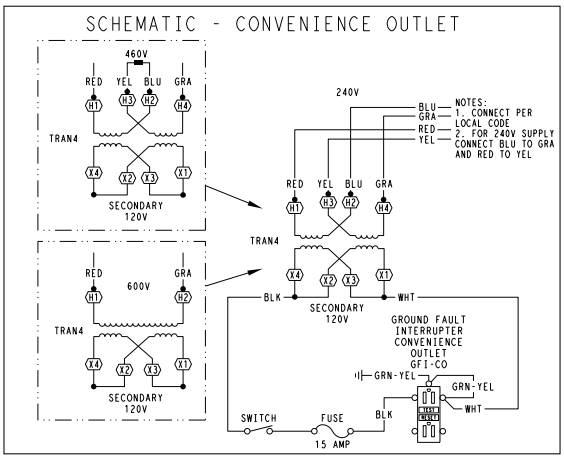

UNIT VOLTAGE	CONNECT AS	PRIMARY CONNECTIONS	TRANSFORMER TERMINALS
208, 230	240	L1: RED +YEL L2: BLU + GRA	H1 + H3 H2 + H4
460	480	L1: RED Splice BLU + YEL L2: GRA	H1 H2 + H3 H4
575	600	L1: RED L2: GRA	H1 H2

Fig. 32 — Powered Convenience Outlet Wiring

Duty Cycle

The unit-powered convenience outlet has a duty cycle limitation. The transformer is intended to provide power on an intermittent basis for service tools, lamps, etc; it is not intended to provide 15A loading for continuous duty loads (such as electric heaters for overnight use). Observe a 50% limit on circuit loading above 8A (i.e., limit loads exceeding 8A to 30 minutes of operation every hour).

Maintenance

Periodically test the GFCI receptacle by pressing the TEST button on the face of the receptacle. This should cause the internal circuit of the receptacle to trip and open the receptacle. Check for proper grounding wires and power line phasing if the GFCI receptacle does not trip as required. Press the RESET button to clear the tripped condition.

Fuse on Powered Type

The factory fuse is a Bussmann Fusetron[1] T-15, non-renewable screw-in (Edison base) type plug fuse.

USING UNIT-MOUNTED CONVENIENCE OUTLETS

Units with unit-mounted convenience outlet circuits will often require that two disconnects be opened to de-energize all power to the unit. Treat all units as electrically energized until the convenience outlet power is also checked and de-energization is confirmed. Observe National Electrical Code Article 210, Branch Circuits, for use of convenience outlets.

ELECTRIC HEATERS

The 559K units can be equipped with field-installed accessory electric heaters. The heaters are modular in design, with heater frames holding open coil resistance wires strung through ceramic insulators and control contactor(s), using a combination of 24-v control side break/auto-reset or line-break/auto-reset limit switches and a pilot-circuit/manual reset limit switch to protect the unit against over-temperature situations. All 559K model electric heaters are one module containing either one or two banks of electric heat coils.

Heater modules are installed in the compartment below the indoor (supply) fan outlet. Access is through the indoor blower access panel. Heater modules slide into the compartment on tracks along the bottom of the heater opening. See Fig. 33-35.

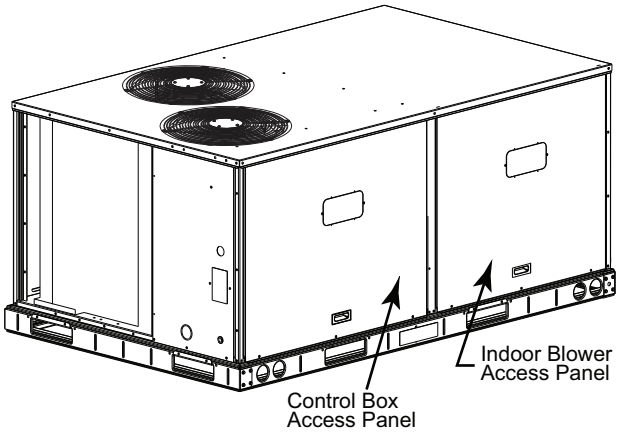

Fig. 33 — Typical Access Panel Location

Not all available heater modules can be used in every unit. Use only those heater modules that are UL listed for use in a specific size unit. Refer to the label on the unit cabinet regarding approved heaters.

1. Third-party trademarks and logos are the property of their respective owners.

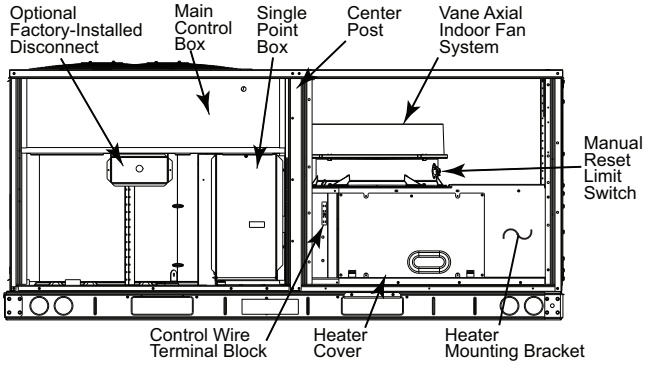

Fig. 34 — Typical Component Location

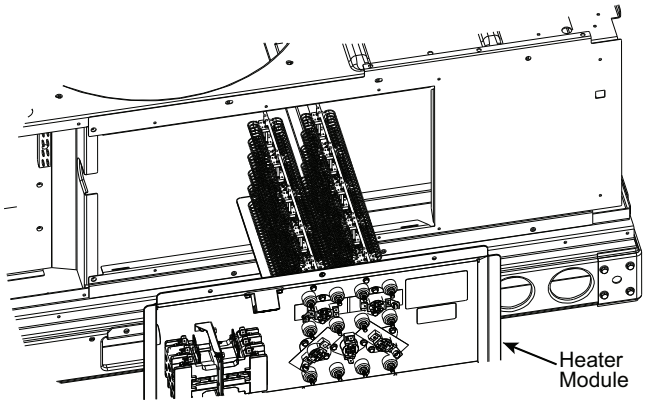

Fig. 35 — Typical Module Installation

SINGLE POINT BOXES AND SUPPLEMENTARY FUSES

When the unit MOCP device value exceeds 60A, unit-mounted supplementary fuses are required for each heater circuit. These fuses are included in accessory single point boxes, with power distribution and fuse blocks. The single point box will be installed directly under the unit control box, just to the left of the partition separating the indoor section (with electric heaters) from the outdoor section. The single point box has a hinged access cover. See Fig. 36.

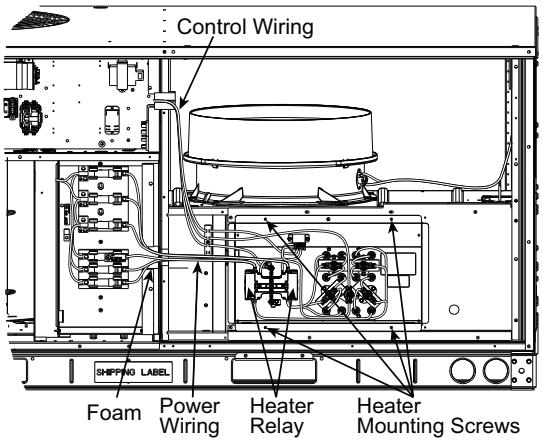

Fig. 36 — Typical Single Point Installation

On 559K units, all fuses are 60A. Single point boxes containing fuses for 208/230-v applications use UL Class RK5 250-v fuses (Bussmann FRNR 60 or Shawmut TR 60R). Single point boxes for 460-v and 575-v applications use UL Class T 600-v fuses (Bussmann JJS 60 or Shawmut A6T 60). (Note that all heaters are qualified for use with a 60A fuse, regardless of actual heater ampacity, so only 60A fuses are necessary.)

SAFETY DEVICES

CRHEATERS323A00 - 341A00 electric heater applications use a combination of 24-v control side break/auto-reset, line-break/non-resettable "one shot" limit switches and a fan stator/manual reset limit switch to protect the unit against over-temperature situations.

Line-break/auto-reset limit switches, 24-v control side break/auto-reset and line-break/non-resettable "one shot" limit switches are mounted on the base plate of each heater module. See Fig. 37. These are accessed through the indoor access panel. Remove the switch by removing two screws into the base plate and extracting the existing switch.

Fan stator/manual reset limit switch is located in the side plate of the indoor (supply) fan housing. See Fig. 37.

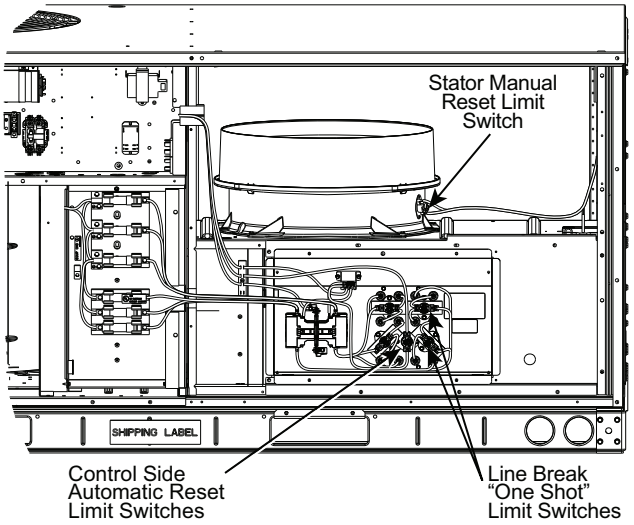

Fig. 37 — Typical Location of Heater Limit Switches (3-phase heater shown)

Completing Heater Installation

FIELD POWER CONNECTIONS

Tap conductors must be installed between the base unit's field power connection lugs and the single point box (with or without fuses). See Fig. 40. Refer to unit wiring schematic. Use copper wire only. For connection using the single point box without fuses, connect the field power supply conductors to the heater power leads and the field-supplied tap conductors inside the single point box. Use UL-approved pressure connectors (field-supplied) for these splice joints.

All low-voltage wiring should be routed through the provided raceway (see Fig. 38 and 39) built into the corner post of the unit or secured to the unit control box with the electrical conduit in order to provide UL-required (or local equivalent) clearance between high-voltage and low-voltage wiring.

LOW-VOLTAGE CONTROL CONNECTIONS

Pull the low-voltage control leads from the heater module(s) — ORN, VIO and BRN — to the 4-pole terminal board TB4 located on the heater bulkhead to the left of heater 1. Connect the ORN lead to terminal TB4-1. Connect the VIO lead to terminal TB4-2. Connect the BRN lead to terminal TB4-3. See Fig. 40.

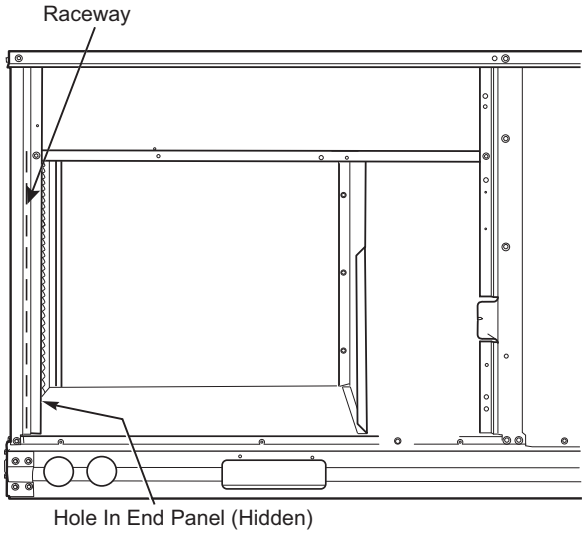

Fig. 38 — 559K*08-14 Low-Voltage Wiring Raceway

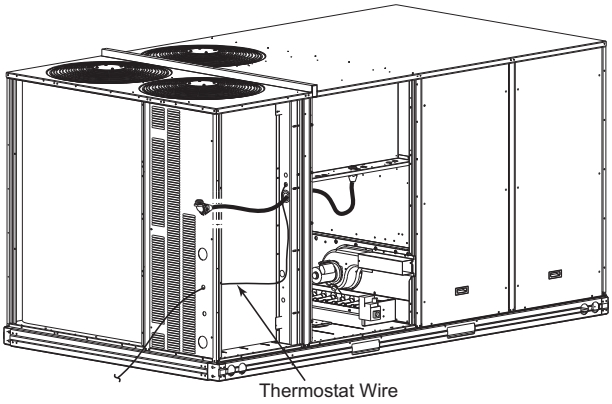

Fig. 39 — 559K*16 Low-Voltage Wire Routing

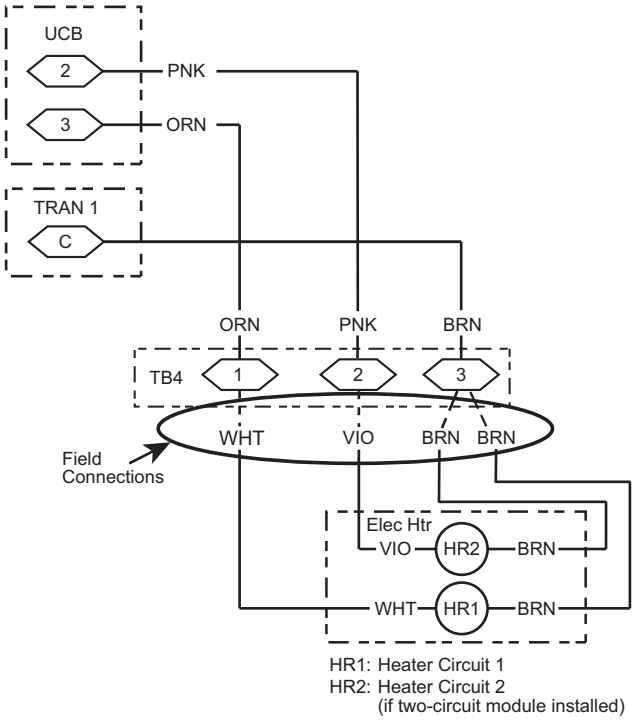

Fig. 40 — Accessory Electric Heater Control Connections

SMOKE DETECTORS

Smoke detectors are available as factory-installed options on 559K models. Smoke detectors may be specified for supply air only, for return air without or with economizer, or in combination of supply air and return air. Return air smoke detectors are arranged for vertical return configurations only. All components necessary for operation are factory-provided and mounted. The unit is factory-configured for immediate smoke detector shutdown operation; additional wiring or modifications to unit terminal board may be necessary to complete the unit and smoke detector configuration to meet project requirements.

System

The smoke detector system consists of a four-wire controller and one or two sensors. Its primary function is to shut down the rooftop unit in order to prevent smoke from circulating throughout the building. It is not to be used as a life saving device.

Controller

The controller (see Fig. 41) includes a controller housing, a printed circuit board, and a clear plastic cover. The controller can be connected to one or two compatible duct smoke sensors. The clear plastic cover is secured to the housing with a single captive screw for easy access to the wiring terminals. The controller has three LEDs (for Power, Trouble and Alarm) and a manual test/reset button (on the cover face).

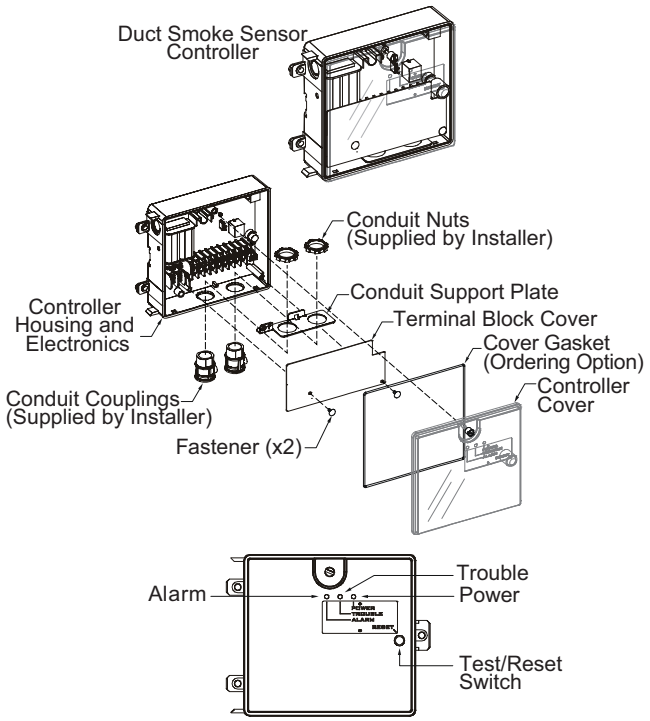

Fig. 41 — Controller Assembly

Smoke Detector Sensor

The smoke detector sensor (see Fig. 42) includes a plastic housing, a printed circuit board, a clear plastic cover, a sampling tube inlet and an exhaust tube. The sampling tube (when used) and exhaust tube are attached during installation. The sampling tube varies in length depending on the size of the rooftop unit. The clear plastic cover permits visual inspections without having to disassemble the sensor. The cover attaches to the sensor housing using four captive screws and forms an airtight chamber around the sensing electronics. Each sensor includes a harness with an RJ45 terminal for connecting to the controller. Each sensor has four LEDs (for Power, Trouble, Alarm and Dirty) and a manual test/reset button (on the left-side of the housing).

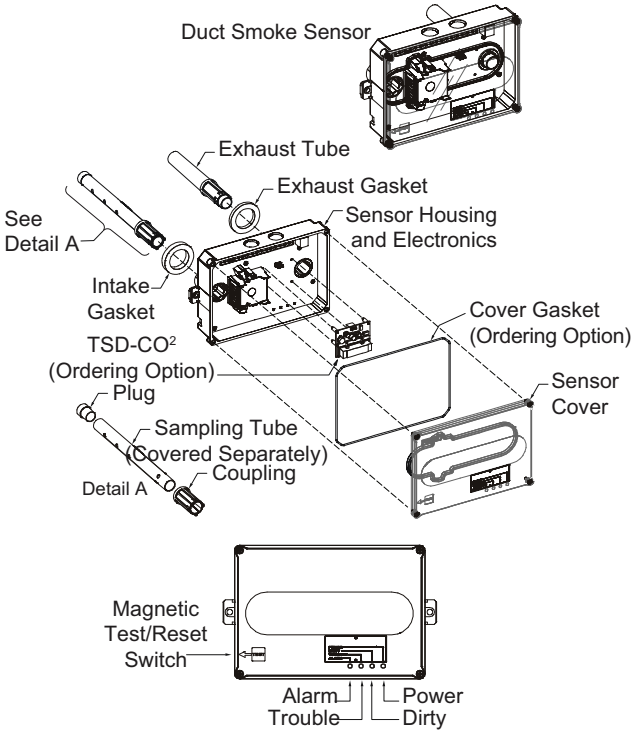

Fig. 42 — Smoke Detector Sensor

Air is introduced to the duct smoke detector sensor's sensing chamber through a sampling tube that extends into the HVAC duct and is directed back into the ventilation system through a (shorter) exhaust tube.

The difference in air pressure between the two tubes pulls the sampled air through the sensing chamber. When a sufficient amount of smoke is detected in the sensing chamber, the sensor signals an alarm state and the controller automatically takes the appropriate action to shut down fans and blowers, change over air handling systems, notify the fire alarm control panel, etc.

The sensor uses a process called differential sensing to prevent gradual environmental changes from triggering false alarms. A rapid change in environmental conditions, such as smoke from a fire, causes the sensor to signal an alarm state but dust and debris accumulated over time does not.

The difference in air pressure between the two tubes pulls the sampled air through the sensing chamber. When a sufficient amount of smoke is detected in the sensing chamber, the sensor signals an alarm state and the controller automatically takes the appropriate action to shut down fans and blowers, change over air handling systems, notify the fire alarm control panel, etc.

For installations using two sensors, the duct smoke detector does not differentiate which sensor signals an alarm or trouble condition.

Smoke Detector Locations

SUPPLY AIR

The supply air smoke detector sensor is located to the right of the unit's indoor (supply) fan. See Fig. 43. Access is through the fan access panel. The sampling tube inlet extends through the fan deck (into a high pressure area). The controller is located on a bracket to the right of the return filter, accessed through the lift-off filter panel.

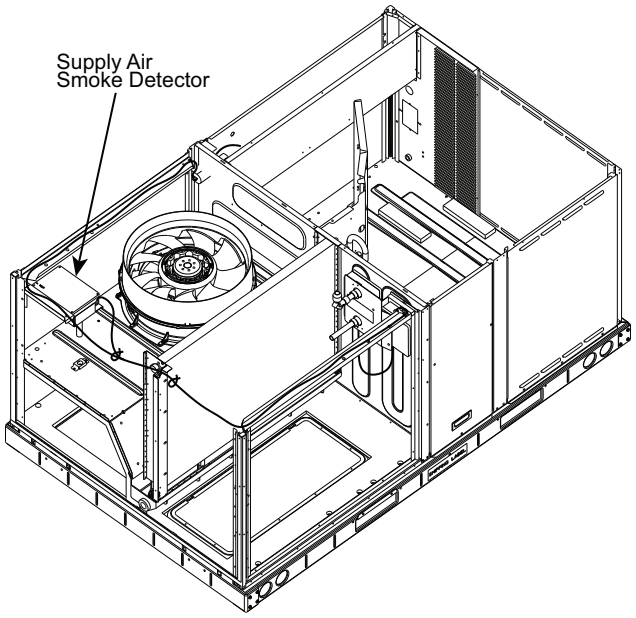

Fig. 43 — Typical Supply Air Smoke Detector Sensor Location

RETURN AIR SMOKE DETECTOR SENSOR WITHOUT ECONOMIZER

The sampling tube is located across the return air opening on the unit basepan. See Fig. 44 and 45. The holes in the sampling tube face downward, into the return air stream. The sampling tube is connected through tubing to the return air sensor that is mounted on a bracket high on the partition between return filter and controller location. The sensor is shipped in a flat-mounting location. Installation requires that this sensor be relocated to its operating location and the tubing to the sampling tube be connected. See installation steps.

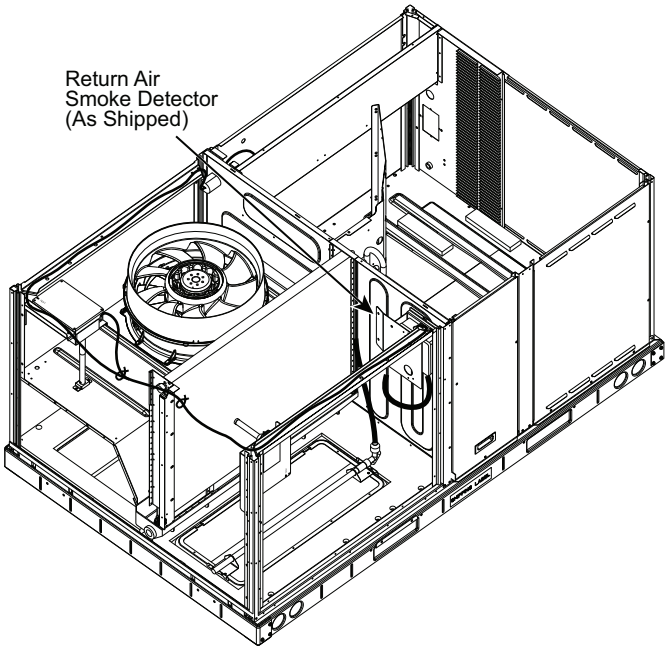

Fig. 44 — Typical Return Air Smoke Detector Location (size 8-14 units)

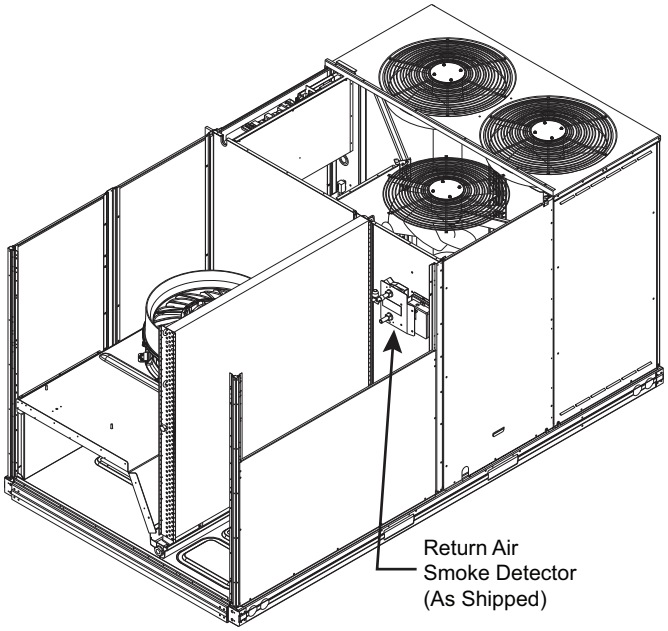

Fig. 45 — Typical Return Air Smoke Detector Location (size 16 units)

RETURN AIR SMOKE DETECTOR SENSOR WITH ECONOMIZER

The sampling tube is inserted through the side plates of the economizer housing, placing it across the return air opening on the unit basepan. See Fig. 46. The holes in the sampling tube face downward, into the return air stream. The sampling tube is connected using tubing to the return air sensor mounted on a bracket high on the partition between return filter and controller location. The sensor is shipped in a flat-mounting location. Installation requires the sensor be relocated to its operating location and the tubing to the sampling tube be connected. See installation steps below.

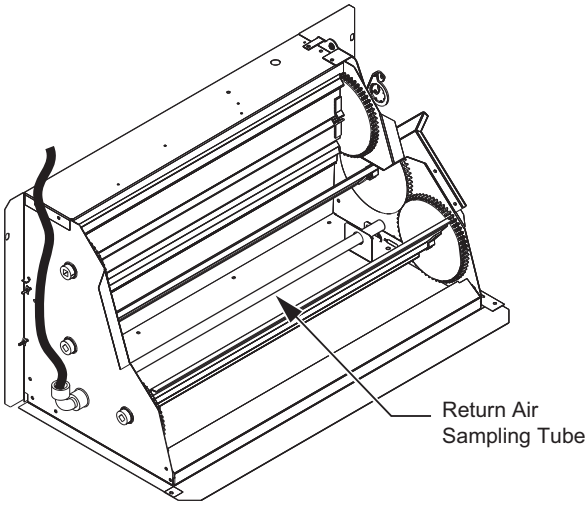

Fig. 46 — Return Air Sampling Tube Location (View reoriented to show opposite side for clarity.)

Completing Installation of Return Air Smoke Detector

Use the following steps to complete the installation of the return air smoke detector.

1. Unscrew the two screws holding the return air sensor detector plate. See Fig. 47. Save the screws.
2. Remove the return air smoke sensor module and its detector plate.

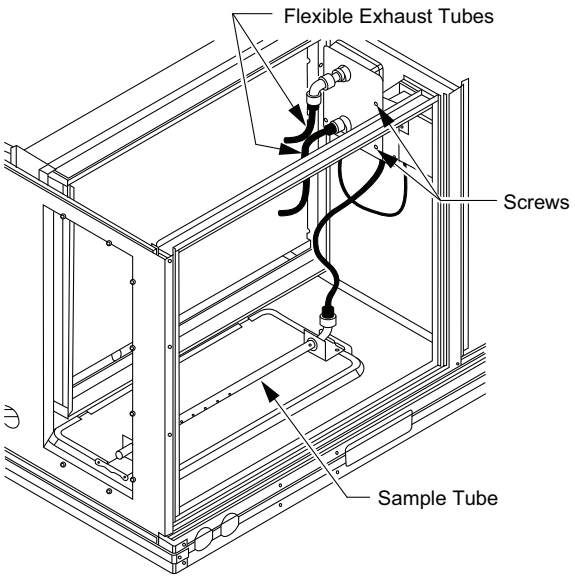

Fig. 47 — Return Air Smoke Detector Shipping Position

3. Rotate the detector plate so the sensor is facing outwards and the sampling tube connection is on the bottom. See Fig. 48.
4. Screw the sensor and detector plate into its operating position using screws from Step 1. Ensure the sampling tube connection is on the bottom and the exhaust tube is on the top.
5. Connect the flexible tube on the sampling inlet to the sampling tube on the basepan.
6. For units with an economizer, the sampling tube is integrated into the economizer housing but connecting the flexible tubing to the sampling tube is the same.

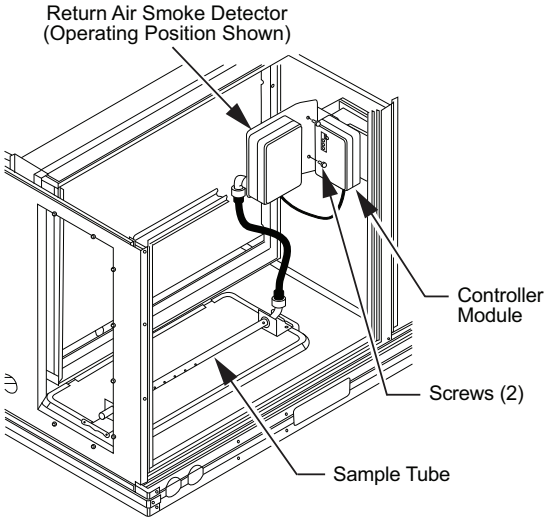

Fig. 48 — Return Air Smoke Detector Operating Position

FIOP Smoke Detector Wiring and Response

ALL UNITS

The FIOP smoke detector is configured to automatically shut down all unit operations when a smoke condition is detected. See Fig. 49, Smoke Detector Wiring.

HIGHLIGHT A

Smoke detector NC contact set will open on smoke alarm condition, de-energizing the ORN conductor.

HIGHLIGHT B

24-v power signal using the ORN lead is removed at the smoke detector input on UCB; all unit operations cease immediately.

ADDITIONAL APPLICATION DATA

Refer to the application data document “Factory Installed Smoke Detectors for Small and Medium Rooftop Units 2 to 25 Tons” for discussions on additional control features of these smoke detectors including multiple unit coordination.

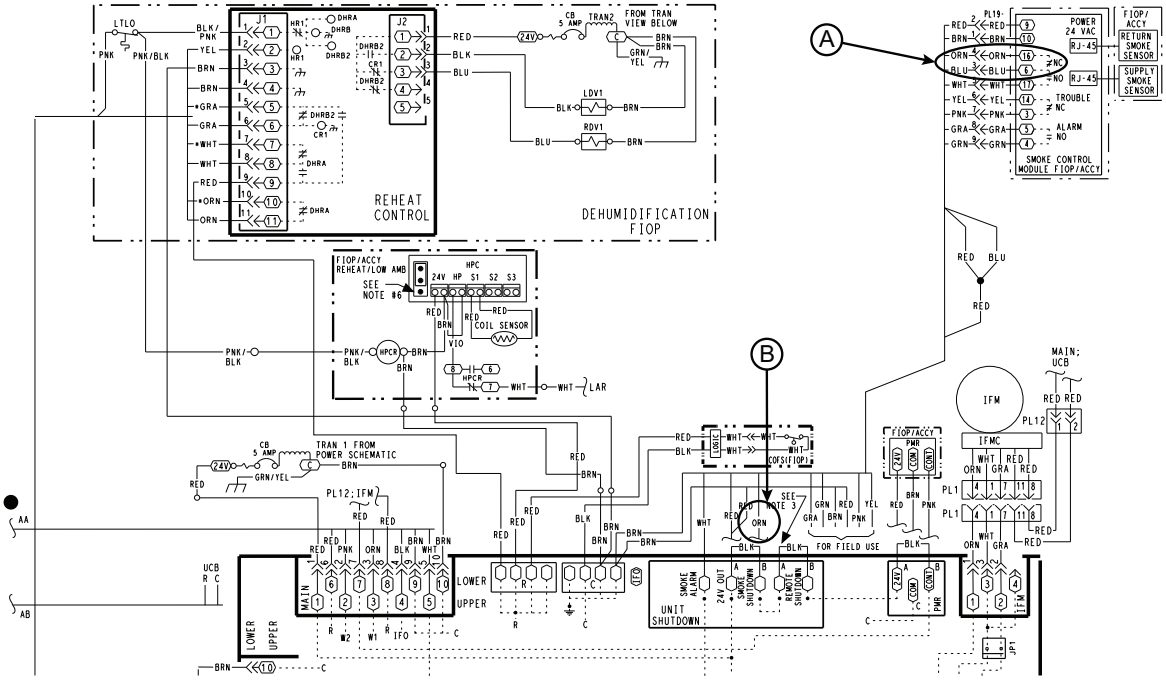

Fig. 49 — Typical Smoke Detector System Wiring

SENSOR AND CONTROLLER TESTS

Sensor Alarm Test

The sensor alarm test checks a sensor's ability to signal an alarm state. This test requires use of a field provided SD-MAG test magnet.

> IMPORTANT: Failure to follow this ALERT can result in an unnecessary evacuation of the facility.
>
> This test places the duct detector into the alarm state. Unless part of the test, disconnect all auxiliary equipment from the controller before performing the test. If the duct detector is connected to a fire alarm system, notify the proper authorities before performing the test.

SENSOR ALARM TEST PROCEDURE

1. Hold the test magnet where indicated on the side of the sensor housing for seven seconds.
2. Verify that the sensor's Alarm LED turns on.
3. Reset the sensor by holding the test magnet against the sensor housing for two seconds.
4. Verify that the sensor's Alarm LED turns off.

Controller Alarm Test

The controller alarm test checks the controller's ability to initiate and indicate an alarm state.

CONTROLLER ALARM TEST PROCEDURE

1. Press the controller's test/reset switch for seven seconds.
2. Verify that the controller's Alarm LED turns on.
3. Reset the sensor by pressing the test/reset switch for two seconds.
4. Verify that the controller's Alarm LED turns off.

> IMPORTANT: Failure to follow this ALERT can result in an unnecessary evacuation of the facility.
>
> This test places the duct detector into the alarm state. Unless part of the test, disconnect all auxiliary equipment from the controller before performing the test. If the duct detector is connected to a fire alarm system, notify the proper authorities before performing the test.

Dirty Controller Test

The dirty controller test checks the controller's ability to initiate a dirty sensor test and indicate its results.

> IMPORTANT: Failure to follow this ALERT can result in an unnecessary evacuation of the facility.
>
> Pressing the controller's test/reset switch for longer than seven seconds will put the duct detector into the alarm state and activate all automatic alarm responses.

DIRTY CONTROLLER TEST PROCEDURE

1. Press the controller's test/reset switch for two seconds.
2. Verify that the controller's Trouble LED flashes.

Dirty Sensor Test

The dirty sensor test provides an indication of the sensor's ability to compensate for gradual environmental changes. A sensor that can no longer compensate for environmental changes is considered 100% dirty and requires cleaning or replacing. A field provided SD-MAG test magnet must be used to initiate a sensor dirty test. The sensor's Dirty LED indicates the results of the dirty test as shown in Table 3.

> IMPORTANT: Failure to follow this ALERT can result in an unnecessary evacuation of the facility.
>
> Holding the test magnet against the sensor housing for more than seven seconds will put the duct detector into the alarm state and activate all automatic alarm responses.

Table 3 — Dirty LED Test

FLASHES	DESCRIPTION
1	0-25% dirty. (Typical of a newly installed detector)
2	25-50% dirty
3	51-75% dirty
4	76-99% dirty

DIRTY SENSOR TEST PROCEDURE

1. Hold the test magnet where indicated on the side of the sensor housing for two seconds.
2. Verify that the sensor's Dirty LED flashes.

> IMPORTANT: Failure to follow this ALERT can result in an unnecessary evacuation of the facility.
>
> Changing the dirty sensor test operation will put the detector into the alarm state and activate all automatic alarm responses. Before changing dirty sensor test operation, disconnect all auxiliary equipment from the controller and notify the proper authorities if connected to a fire alarm system.

Changing the Dirt Sensor Test

By default, sensor dirty test results are indicated by:

- The sensor's Dirty LED flashing.
- The controller's Trouble LED flashing.
- The controller's supervision relay contacts toggle.

The operation of a sensor's dirty test can be changed so that the controller's supervision relay is not used to indicate test results. When two detectors are connected to a controller, sensor dirty test operation on both sensors must be configured to operate in the same manner.

TO CONFIGURE THE DIRTY SENSOR TEST

OPERATION

1. Hold the test magnet where indicated on the side of the sensor housing until the sensor's Alarm LED turns on and its Dirty LED flashes twice (approximately 60 seconds).
2. Reset the sensor by removing the test magnet then holding it against the sensor housing again until the sensor's Alarm LED turns off (approximately 2 seconds).

Remote Station Test

The remote station alarm test checks a test/reset station's ability to initiate and indicate an alarm state.

> IMPORTANT: Failure to follow this ALERT can result in an unnecessary evacuation of the facility.
>
> This test places the duct detector into the alarm state. Unless part of the test, disconnect all auxiliary equipment from the controller before performing the test. If the duct detector is connected to a fire alarm system, notify the proper authorities before performing the test.

SD-TRK4 Remote Alarm Test Procedure

1. Turn the key switch to the RESET/TEST position for seven seconds.
2. Verify that the test/reset station's Alarm LED turns on.
3. Reset the sensor by turning the key switch to the RESET/TEST position for two seconds.
4. Verify that the test/reset station's Alarm LED turns off.

Remote Test/Reset Station Dirty Sensor Test

The test/reset station dirty sensor test checks the test/reset station's ability to initiate a sensor dirty test and indicate the results. It must be wired to the controller as shown in Fig. 50 and configured to operate the controller's supervision relay. For more information, see "Dirty Sensor Test" on page 29.

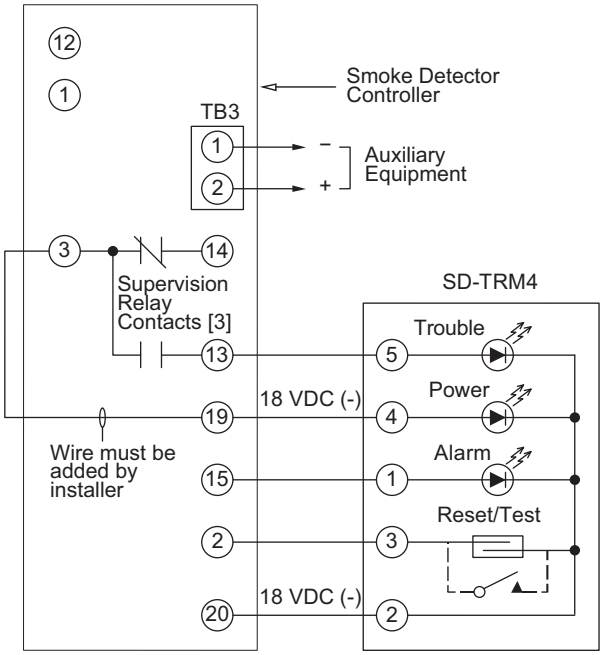

Fig. 50 — Remote Test/Reset Station Connections

> IMPORTANT: Failure to follow this ALERT can result in an unnecessary evacuation of the facility.
>
> If the test/reset station's key switch is left in the RESET/TEST position for longer than seven seconds, the detector will automatically go into the alarm state and activate all automatic alarm responses.

> IMPORTANT: Failure to follow this ALERT can result in an unnecessary evacuation of the facility.
>
> Holding the test magnet to the target area for longer than seven seconds will put the detector into the alarm state and activate all automatic alarm responses.

Dirty Sensor Test Using an SD-TRK4

1. Turn the key switch to the RESET/TEST position for two seconds.
2. Verify that the test/reset station's Trouble LED flashes.

Detector Cleaning

CLEANING THE SMOKE DETECTOR

Clean the duct smoke sensor when the Dirty LED is flashing continuously or sooner, if conditions warrant.

> IMPORTANT: OPERATIONAL TEST ALERT
>
> Failure to follow this ALERT can result in an unnecessary evacuation of the facility.
>
> If the smoke detector is connected to a fire alarm system, first notify the proper authorities that the detector is undergoing maintenance then disable the relevant circuit to avoid generating a false alarm.

1. Disconnect power from the duct detector then remove the sensor's cover. See Fig. 51.
2. Using a vacuum cleaner, clean compressed air, or a soft bristle brush, remove loose dirt and debris from inside the sensor housing and cover. Use isopropyl alcohol and a lint-free cloth to remove dirt and other contaminants from the gasket on the sensor's cover.
3. Squeeze the retainer clips on both sides of the optic housing.
4. Lift the housing away from the printed circuit board.
5. Gently remove dirt and debris from around the optic plate and inside the optic housing.
6. Replace the optic housing and sensor cover.
7. Connect power to the duct detector then perform a sensor alarm test.

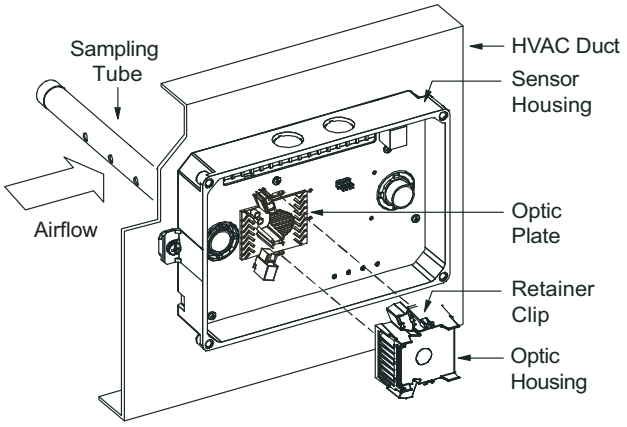

Fig. 51 — Sensor Cleaning Diagram

Indicators

NORMAL STATE

The smoke detector operates in the normal state in the absence of any trouble conditions and when its sensing chamber is free of smoke. In the normal state, the Power LED on both the sensor and the controller are on and all other LEDs are off.

ALARM STATE

The smoke detector enters the alarm state when the amount of smoke particulate in the sensor's sensing chamber exceeds the alarm threshold value. (See Table 4.) Upon entering the alarm state:

- The sensor's Alarm LED and the controller's Alarm LED turn on.
- The contacts on the controller's two auxiliary relays switch positions.
- The contacts on the controller's alarm initiation relay close.
- The controller's remote alarm LED output is activated (turned on).
- The controller's high impedance multiple fan shutdown control line is pulled to ground Trouble state.

The SuperDuct™ duct smoke detector enters the trouble state under the following conditions:

- A sensor's cover is removed and 20 minutes pass before it is properly secured.
- A sensor's environmental compensation limit is reached (100% dirty).
- A wiring fault between a sensor and the controller is detected.

An internal sensor fault is detected upon entering the trouble state:

- The contacts on the controller's supervisory relay switch positions. (See Fig. 52.)
- If a sensor trouble, the sensor's Trouble LED the controller's Trouble LED turn on.
- If 100% dirty, the sensor's Dirty LED turns on and the controller's Trouble LED flashes continuously.
- If a wiring fault between a sensor and the controller, the controller's Trouble LED turns on but not the sensor's.

Table 4 — Detector Indicators

CONTROL OR INDICATOR	DESCRIPTION
Magnetic test/ reset switch	Resets the sensor when it is in the alarm or trouble state. Activates or tests the sensor when it is in the normal state.
Alarm LED	Indicates the sensor is in the alarm state.
Trouble LED	Indicates the sensor is in the trouble state.
Dirty LED	Indicates the amount of environmental compensation used by the sensor (flashing continuously = 100%)
Power LED	Indicates the sensor is energized.

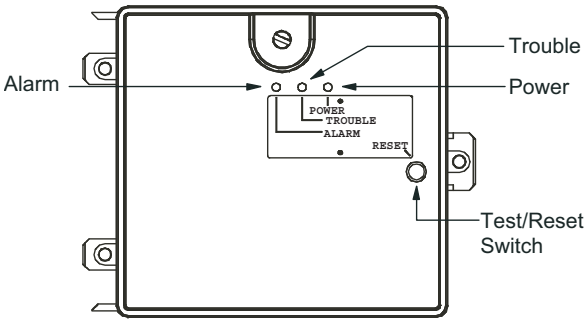

Fig. 52 — Controller Assembly

NOTE: All troubles are latched by the duct smoke detector. The trouble condition must be cleared and then the duct smoke detector must be reset in order to restore it to the normal state.

RESETTING ALARM AND TROUBLE CONDITION TRIPS

Manual reset is required to restore smoke detector systems to Normal operation. For installations using two sensors, the duct smoke detector does not differentiate which sensor signals an alarm or trouble condition. Check each sensor for Alarm or Trouble status (indicated by LED). Clear the condition that has generated the trip at this sensor. Then reset the sensor by pressing and holding the reset button (on the side) for 2 seconds. Verify that the sensor's Alarm and Trouble LEDs are now off. At the controller, clear its Alarm or Trouble state by pressing and holding the manual reset button (on the front cover) for 2 seconds. Verify that the controller's Alarm and Trouble LEDs are now off. Replace all panels.

Troubleshooting

CONTROLLER'S TROUBLE LED IS ON

1. Check the Trouble LED on each sensor connected to the controller. If a sensor's Trouble LED is on, determine the cause and make the necessary repairs.
2. Check the wiring between the sensor and the controller. If wiring is loose or missing, repair or replace as required.

CONTROLLER'S TROUBLE LED IS FLASHING

1. One or both of the sensors is 100% dirty.
2. Determine which Dirty LED is flashing then clean that sensor assembly as described in the detector cleaning section.

SENSOR'S TROUBLE LED IS ON

1. Check the sensor's Dirty LED. If it is flashing, the sensor is dirty and must be cleaned.
2. Check the sensor's cover. If it is loose or missing, secure the cover to the sensor housing.
3. Replace sensor assembly.

SENSOR'S POWER LED IS OFF

1. Check the controller's Power LED. If it is off, determine why the controller does not have power and make the necessary repairs.
2. Check the wiring between the sensor and the controller. If wiring is loose or missing, repair or replace as required.

CONTROLLER'S POWER LED IS OFF

1. Make sure the circuit supplying power to the controller is operational. If not, make sure JP2 and JP3 are set correctly on the controller before applying power.
2. Verify that power is applied to the controller's supply input terminals. If power is not present, replace or repair wiring as required.

REMOTE TEST/RESET STATION'S TROUBLE LED DOES NOT FLASH WHEN PERFORMING A DIRTY TEST, BUT THE CONTROLLER'S TROUBLE LED DOES

1. Verify that the remote test/station is wired as shown in Fig. 50. Repair or replace loose or missing wiring.
2. Configure the sensor dirty test to activate the controller's supervision relay. See "Dirty Sensor Test" on page 29.

SENSOR'S TROUBLE LED IS ON, BUT THE CONTROLLER'S TROUBLE LED IS OFF

Remove JP1 on the controller.

PROTECTIVE DEVICES

Compressor Protection

OVERCURRENT

The compressor has internal line-break motor protection.

OVERTEMPERATURE

The compressor has an internal protector to protect it against excessively high discharge gas temperatures.

MIXED TEMPERATURE SENSOR

The Mixed Temperature Sensor (MTS) is installed on the return side of the unit filter bracket. See Fig. 53.

The switch opens to prevent mechanical cooling operation at low return temperatures (below 60°F [±1.5°F]). When the switch is open, compressor operation is disabled but indoor fan and economizer operation may continue.

The switch closes when return air warms to 65°F (±1.5°F) allowing compressor operation to resume.

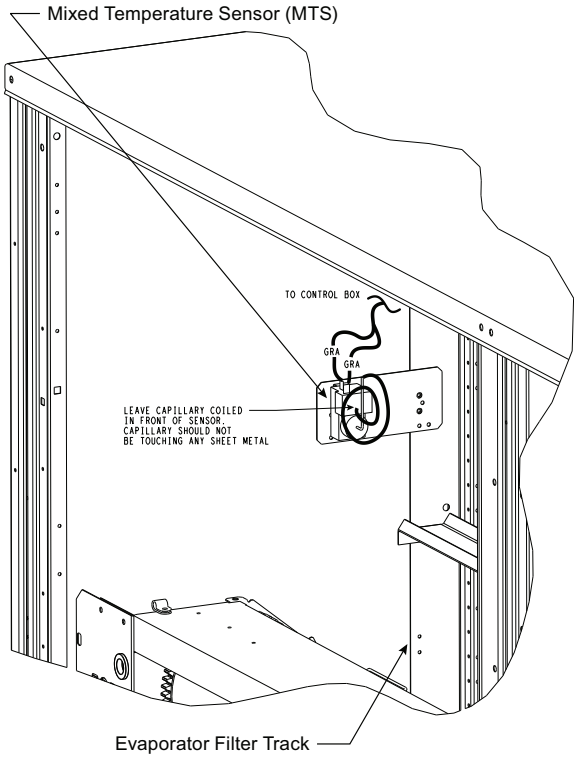

Fig. 53 — Mixed Temperature Sensor Location

HIGH PRESSURE SWITCH

The system is provided with a high pressure switch mounted on the discharge line. The switch is stem-mounted and brazed into the discharge tube. Trip setting is 630 psig ± 10 psig (4344 ± 69 kPa) when hot. Reset is automatic at 505 psig (3482 kPa).

LOW PRESSURE SWITCH

The system is protected against a loss of charge and low evaporator coil loading condition by a low pressure switch located on the suction line near the compressor. The switch is stem-mounted. Trip setting is 54 psig ± 5 psig (372 ± 34 kPa). Reset is automatic at 117 ± 5 psig (807 ± 34 kPa).

EVAPORATOR FREEZE PROTECTION

The system is protected against evaporator coil frosting and low temperature conditions by a temperature switch mounted on the evaporator coil hairpin. Trip setting is 30°F ± 5°F (–1°C ± 3°C). Reset is automatic at 45°F (7°C).

SUPPLY (INDOOR) FAN MOTOR PROTECTION

Disconnect and lockout power when servicing fan motor.

Supply fan motors contain a safety relay that opens in the event of a fault. This relay protects the motor against certain supply power conditions as well as over-temperature and over-current protection. If the relay is open it will remove 24V to R on the UCB and will also prevent cooling/heating operation to protect the unit until the fault condition clears. Do not bypass this switch to correct trouble. Determine the cause and correct it. (See Table 5.)

CONDENSER FAN MOTOR PROTECTION

The condenser fan motor is internally protected against over-temperature.

Relief Device

A soft solder joint at the suction service access port provides pressure relief under abnormal temperature and pressure conditions (i.e., fire in building). Protect this joint during brazing operations near this joint.

Control Circuit, 24-V

The control circuit is protected against over-current conditions by a circuit breaker mounted on control transformer TRAN. Reset is manual.

Table 5 — Supply Fan Motor Logic and Safety Relays

DESCRIPTION	START DELAY
No Error	—
NTC Over-Temperature Protection	Automatic Reset – Motor starts 12 seconds after the temperature falls below reset limit.
Phase Fault	Automatic Reset – Motor to start after 3 phases present.
Over Current Protection	Automatic Reset – If motor over-current protection trips, motor restarts after 20 seconds off time. If over-current is detected 3 times consecutively, the motor is off for 3 minutes and restarts. Cycle starts again after 20 seconds.
Locked Rotor Protection, Start-up	Automatic Reset – If motor detects locked rotor, it attempts to restart after 5 seconds. If motor detects 3 consecutive faults, the motor waits 3 minutes and restarts. Cycle starts again after 20 seconds.
Locked Rotor Protection, Running	
Over/Under Voltage	Automatic Reset – Motor restarts as soon as input voltage is back within ±10%.
Current Sampling Error	Manual Reset – Power off and wait 2 minutes and restart motor.
Microelectronic (MCU) Fault	Automatic Reset – Motor restarts 3 minutes after fault clears.
	Manual Reset – Power off and wait 2 minutes and restart motor.

ECONOMIZER SYSTEMS

The unit may be equipped with a factory-installed economizer system with a logic control system (EconomizerONE). See Fig. 54 and 55 for component locations.

Economizers use direct-drive damper actuators.

IMPORTANT: Any economizer that meets the economizer requirements as laid out in California's Title 24 mandatory section 120.2 (fault detection and diagnostics) and/or prescriptive section 140.4 (life-cycle tests, damper leakage, 5 year warranty, sensor accuracy, etc), will have a label on the economizer. Any economizer without this label does not meet California's Title 24. The five year limited parts warranty referred to in section 140.4 only applies to factory installed economizers. Please refer to your economizer on your unit.

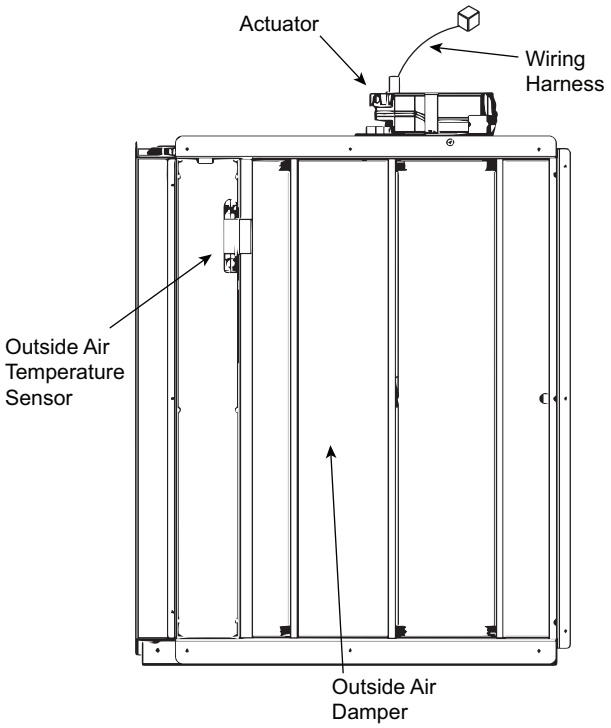

Fig. 54 — 559K*08-14 EconomizerONE Component Locations (CRECOMZR108A00 Shown)

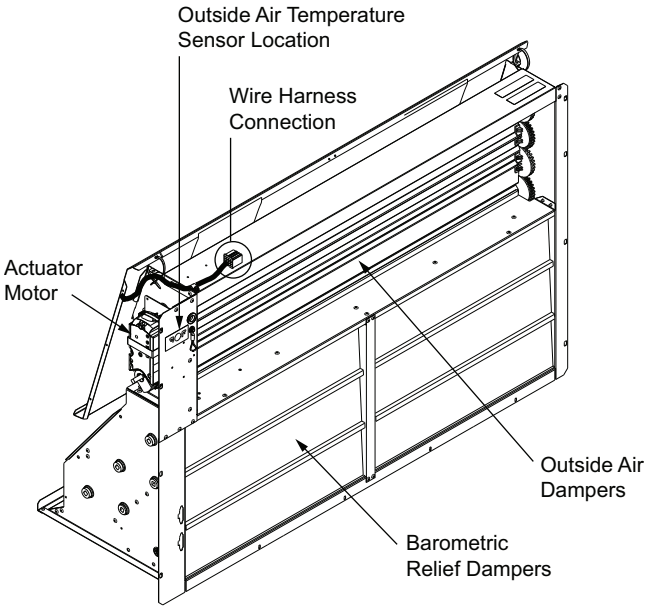

Fig. 55 — 559K*16 EconomizerONE Component Locations (CRECOMZR109A00 Shown)

EconomizerONE (Field-Installed Accessory)

MOUNTING, INSTALLATION, AND WIRING

⚠ WARNING

Failure to follow this caution may result in damage to equipment. Be sure to allow enough time for compressor startup and shutdown between checkout tests so that the compressors do not short-cycle.

Mounting the Economizer Controller Base Module

Before mounting, leave specific mounting clearances so that there is space for mounting, wiring, and servicing. See Fig. 56 and Table 6 for economizer controller wiring details.

POL224 can be mounted to sheet metal. Use two no. 6-3/4 in. self-tapping screws to mount POL224. Order screws and spacers separately, as they are not provided with the products.

See the installation instructions included with the controller for detailed clearance requirements and graphical mounting instructions.

Mounting Devices Connected to the Economizer Controller

Devices like damper actuators, sensors (temperature sensor, humidity sensor, combination temperature and humidity sensor, CO_2 sensor), thermostats, and exhaust fans can be connected to the economizer controller. For information on how to mount the devices, see the device's installation instructions.

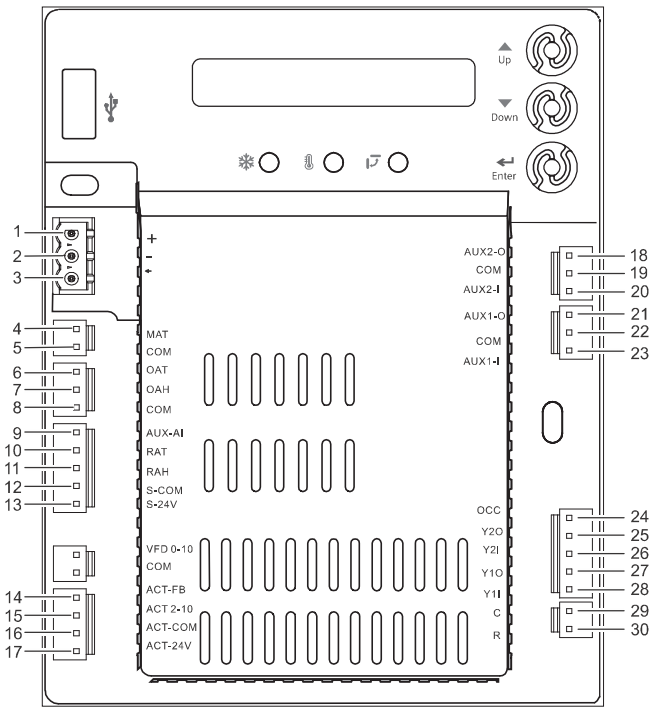

Fig. 56 — Economizer Control Wiring

Table 6 — Economizer Control Wiring Settings

NO.	LABEL	TYPE	DESCRIPTION
1	+	RS485 Modbus A	Line A
2	-	RS485 Modbus B	Line B
3	¬	GND_ISO	Earth Ground
4	MAT	Type II NTC 10K or 0-10 vdc	Mixed or Discharge Air Temperature Sensor
5	COM	COM	Mixed or Discharge Air Temperature Sensor Common
6	OAT	Type II NTC 10K or 0-10 vdc	Outside Air Temperature Sensor
7	OAH	0-10 vdc or 4-20mA	Outside Air Relative Humidity Sensor
8	COM	COM	Outside Air Temperature Sensor or Outside Air Relative Humidity Sensor Common
9	AUX-AI	0-10 vdc, 2-10 vdc or 0-5 vdc	Air Quality Sensor or Pressure Sensor
10	RAT	Type II NTC 10K or 0-10 vdc	Return Air Temperature Sensor
11	RAH	0-10 vdc or 4-20mA	Return Air Relative Humidity Sensor
12	S-COM	COM	24 vac Common
13	S-24V	24 vac	24 vac Power Out to Sensors
14	ACT-FB	2-10 vdc	Damper Actuator Feedback
15	ACT2-10	2-10 vdc	Damper Actuator Output
16	ACT-COM	COM	Damper Actuator Output Common
17	ACT-24V	24 vac	24 vac Power Out to Damper Actuator
18	AUX2-O	24 vac OUT	Configurable: • Cooling Stage 3 Output • Exhaust Fan (1 or 2) • System Alarm Output (Title 24)
19	COM	COM	24 vac Common
20	AUX2-1	24 vac IN	Configurable: • Cooling Stage 3 Input • Shut Down • Heat Conventional (W1) • Heat Pump Changeover (reversing valve OB) • Pre-Occupancy
21	AUX1-O	24 vac OUT	Configurable: • Cooling Stage 3 Output • Exhaust Fan (1 or 2) • VFD On/Off (Variable Speed Supply Fan Enable or Disable) • System Alarm Output (Title 24)
22	COM	COM	24 vac Common
23	AUX1-I	24 vac IN	Configurable: • Cooling Stage 3 Input • Shut Down • Heat Conventional (W1) • Heat Pump Changeover (reversing valve OB) • Pre-Occupancy
24	OCC	24 vac IN	Occupancy Input
25	Y2O	24 vac OUT	Cooling Stage 2 Output to Stage 2 Mechanical Cooling
26	Y2I	24 vac IN	Cooling Stage 2 Input from Commercial Thermostat
27	Y1O	24 vac OUT	Cooling Stage 1 Output to Stage 1 Mechanical Cooling
28	Y1I	24 vac IN	Cooling Stage 1 Input from Commercial Thermostat
29	C	COM	24 vac Common
30	R	24 vac	24 vac Power

CONNECTING PERIPHERAL DEVICES TO THE ECONOMIZER CONTROLLER

See Fig. 57-61 for wiring details.

- Outside Air: Connect to the OAT and COM terminals of the device.
- Return Air (Differential): Connect to the RAT and S-COM terminals of the device.
- Mixed Air: Connect to the MAT and COM terminals of the device.

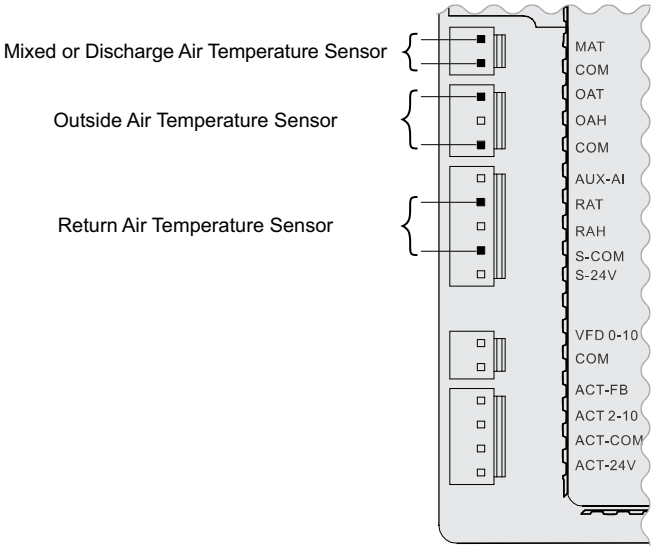

Fig. 57 — Temperature Sensor Connection

- Outside Air Relative Humidity: Connect to the OAH and COM terminals of the device.
- Return Air Relative Humidity: Connect to the RAH and S-COM terminals of the device.

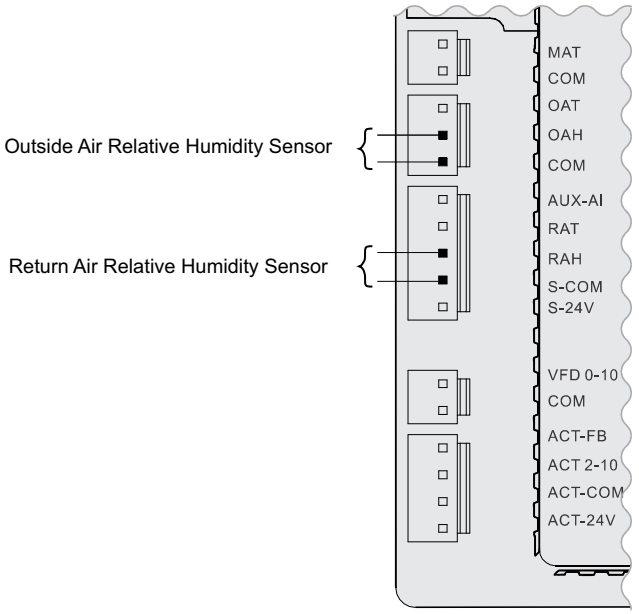

Fig. 58 — Relative Humidity Sensor Connection

- Outside Combination Temperature/ Humidity: Connect to the OAT, COM, and OAH terminals of the device.
- Return Combination Temperature/ Humidity: Connect to the RAT, S-COM, and RAH terminals of the device.

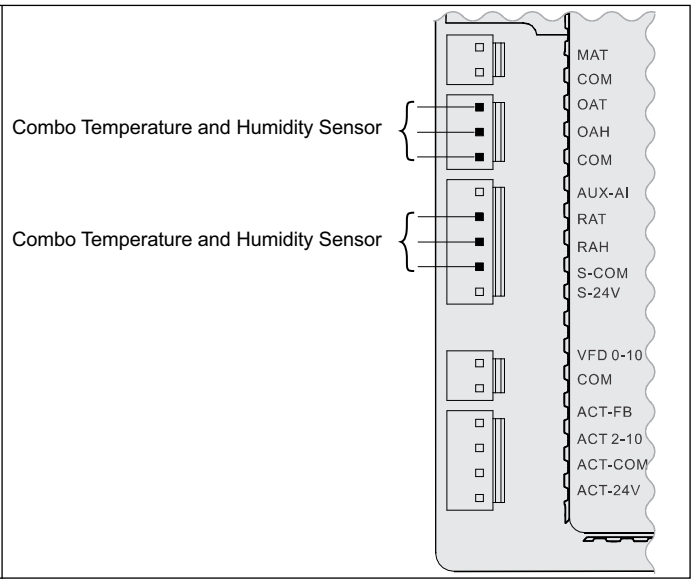

Fig. 59 — Combination Temperature/Humidity Sensor Connection

- Connect to the AUX-AI, S-COM, and S-24V terminals of the device.

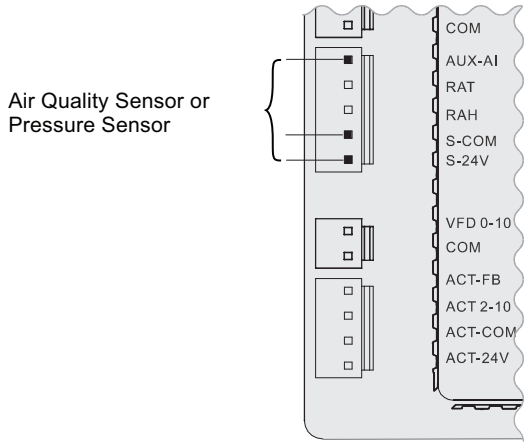

Fig. 60 — CO_2/Pressure Sensor Connection

- Connect to the ACT 2-10, ACT-COM, and ACT-24V terminals of the device.

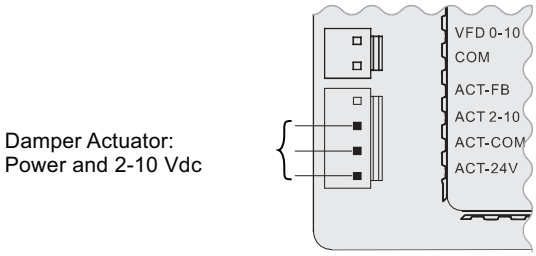

Fig. 61 — Damper Actuator Connection

EconomizerONE (Factory Option)

ECONOMIZER SETTINGS

Interface Overview

EconomizerONE

The factory-installed accessory consists of the following:

- Ultra Low Leak Economizer Assembly
- HH79NZ039 OA Dry Bulb Sensor
- HH79NZ039 Mixed Air Sensor
- POL224 Controller
- 50HE005489 Harness

POL224 Economizer Module Wiring

The economizer controller used on electromechanical units is a Siemens POL224, which is to be located in the RTU base unit's control box. See Fig. 62 for a button description for the POL224 controller. Refer to the unit dimensional drawings for the location of the control box access panel.

The POL224 controller provides the following:

1. One-line LCD — After a period of inactivity, the controller displays the default HMI screen (free cooling status, 1FREE-COOL YES, or 1FREE COOL NO). See Fig. 62-66.
2. Operation button (Up button) — Move to the previous value, step, or category.
3. Operation button (Down button) — Move to the next value, step, or category.
4. Operation button (Enter button):
   a. Press Enter to edit the current value or option.
   b. Press Enter to confirm a newly selected value or option.
   c. Press Enter + Up to jump up one entire category.
5. Press Enter + Down to jump down one entire category.

User Interface and Keypad

The controller user interface consists of an LCD display and a 3-button keypad for input. The LCD is a 16 character by 1-line dot matrix display. The keypad is used to navigate and change the desired menu items on the display. See Fig. 62.

The Climatix™[1] mobile application allows for installation, commissioning, and servicing. Scanning a QR code on the controller allows users to download the mobile application on Android™[1] or Apple iOS®[1], but a Wi-Fi/WLAN stick is needed. See Fig. 62 and 63. Plug Wi-Fi/WLAN stick into controller USB port for temporary connection for mobile application setup. The Wi-Fi/WLAN stick can be used for multiple units.

Menu Structure

Menus are displayed in the economizer controller in categories. There are 8 first-level menus, each of which is represented by a number at the beginning of the line on the LCD. Pressing Enter + Up or Down can toggle between different first-level menus. Submenus follow the numbered first-level menus closely. Pressing Up or Down can toggle between different submenus.

At the end of the line, the LCD displays the value of the current submenu (if any). If the value is editable, pressing Enter will put the terminal in Edit mode. The value is then highlighted for change. After making a change by pressing Up or Down, press Enter to confirm the change and exit the Edit mode. See Fig. 65.

Powering the Economizer Controller

The POL224 controller power connections are made through the economizer harness (P/N 50HE005489). Connections from the harness are made to the C (24 vac common) and R (24 vac power) terminals of the economizer controller. See Fig. 64.

1. Third-party trademarks and logos are the property of their respective owners.

LED Indication

NOTE: If different faulty events occur at the same time, the sensor/DAC LED lights up following this priority: Red → Yellow → Off. For example, if there is a humidity sensor error and air temperature failure at the same time, the sensor LED turns red rather than yellow. See Fig. 66 and Table 7.

IMPORTANT: After the economizer controller enters the running state, it may take one minute for peripheral devices to complete initialization. Before that, LED indication might be unstable.

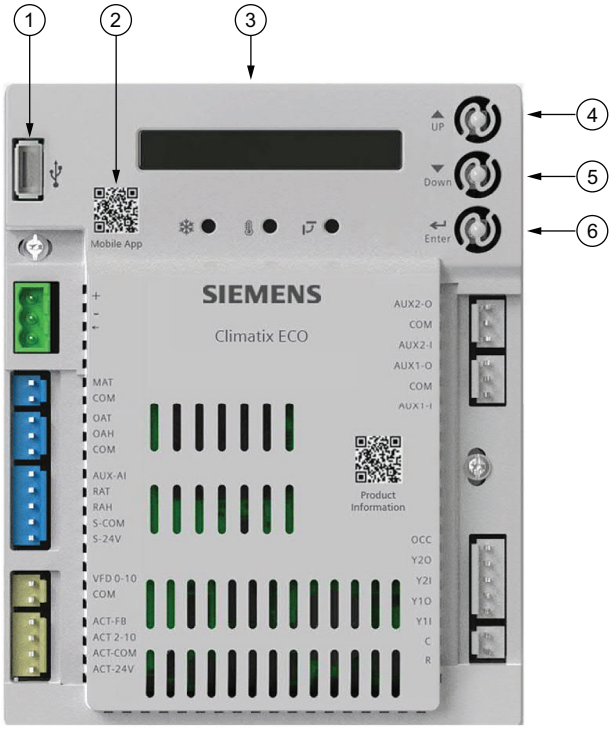

NOTE: QR codes in this image are for reference only.

NO.	DESCRIPTION
1	USB port for Wi-Fi/WLAN stick
2	QR code to download Climatix™ mobile application
3	One-line LCD. After a period of inactivity, the controller displays the default HMI screen (free cooling status, 1FREECOOL YES or 1FREECOOL NO)
4	Operation button (Up button) - Move to the previous value, step or category
5	Operation button (Down button) - Move to the next value, step or category
6	Operation button (Enter button): • Press to edit the current value or option. • Press to confirm a newly selected value or option. • Press Enter + Up to jump up one entire category. • Press Enter + Down to jump down one entire category.

Fig. 62 — POL224 Controller

NOTE: QR codes in this image are for reference only.

Fig. 63 — Wi-Fi/WLAN Stick

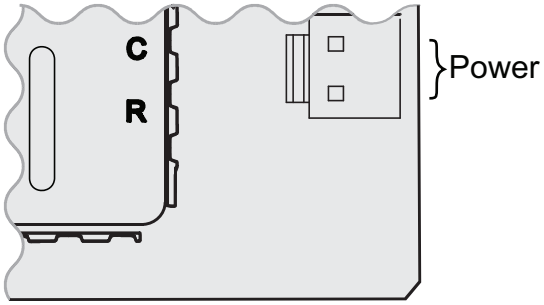

Fig. 64 — Powering the Economizer Controller

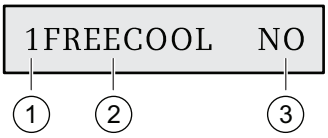

No.	Description
1	Number representing the first-level menu of **Status Display**. Different numbers represent different menus: 1: Status Display 2: Basic Settings 3: Advanced Settings 4: Alarms 5: Enter Configuration State and Reset 6: I/O Config 7: Testing 8: Enter Running State
2	Submenu[a]
3	Value of the current submenu[a]

a. See Setup and Configuration on page 48 for detailed submenus, together with possible values or ranges.

Fig. 65 — Menu Structure Descriptions

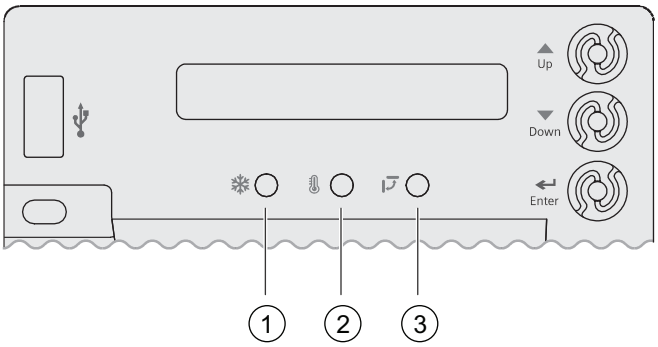

NO.	DESCRIPTION
1	Free Cooling LED
2	Sensor LED
3	DAC LED

Fig. 66 — LED Indication

Table 7 — LED Indication

STATUS	FREE COOLING LED	SENSOR LED	DAC LED
Commissioning mode	Yellow Blinking	Yellow Blinking	Yellow Blinking
Power start-up	Yellow On	Yellow On	Yellow On
Free cooling is running	Green On	—	—
Free cooling is available but not running	Green Blinking	—	—
Not economizing when it should	Red Blinking	—	—
Economizing when it should not	Red On	—	—
Sensor working okay	—	Green On	—
Humidity sensor error	—	Yellow On	—
CO_2 sensor error	—	LED Off	—
Air temperature fault/failure	—	Red On	—
Excess outdoor air	—	Red Blinking	—
Damper working okay	—	—	Green On
Damper not modulating	—	—	Red On
Damper slippage	—	—	Red Blinking
Damper unplugged	—	—	Fast Red Blinking
Terminal ACT-FB is configured but no available feedback signal	—	—	LED Off

Functions

Free Cooling Economizing

Free cooling uses unconditioned outside air to cool the space directly. The economizer controller enables or disables free cooling after it judges which control mode is active. It also uses hysteresis to ensure a smooth switchover.

Depending on the sensors that are used, there are 4 different control modes. In different control modes, the assessed conditions are different. See Table 8.

Default Hysteresis Setting

Hysteresis setting (DB) defaults to 2°F (–16.6°C). See Fig. 67.

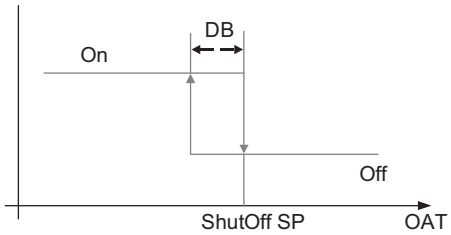

LEGEND
OAT — Outside Air Temperature
DB — Deadband
SP — Set Point

Fig. 67 — Hysteresis Settings

Table 8 — Free Cooling Functions

CONTROL MODE	SENSORS USED	ENABLE FREE COOLING?
Control Mode 1 • Fixed Dry Bulb	OA (outside air) Temperature Sensor and MA (Mixed Air) Temperature Sensor	The outside air dry bulb temperature is compared with the set temperature shutoff set point. If the outside air dry bulb temperature is below the temperature shutoff set point, then the outside air is used to meet all or part of the cooling demand.
Control Mode 2 • Differential Dry Bulb (Dual Dry Bulbs)	OA Temperature Sensor, RA (Return Air) Temperature Sensor, and MA Temperature Sensor	The outside air dry bulb temperature is compared with the return air dry bulb temperature. If both OAT and RAT are higher than the temperature high limitation, then free cooling is prohibited. If OAT or RAT is lower than the temperature high limitation and the outside air dry bulb temperature is lower than the return air dry bulb temperature, then the outside air is used to meet all or part of the cooling demand.
Control Mode 3 • Combination Fixed Enthalpy and Fixed Dry Bulb Control	OA Temperature and Humidity Sensor and MA Temperature Sensor	The outside air dry bulb temperature and enthalpy are compared with the set temperature and enthalpy shutoff set points. If the outside air enthalpy is lower than the set enthalpy shutoff set point, and the outside air dry bulb temperature is lower than the temperature shutoff set point, then the outside air can be used for economizing.
Control Mode 4 • Combination of Differential Enthalpy and Fixed Dry Bulb	OA Temperature and Humidity Sensor, RA Temperature and Humidity Sensor, and MA Temperature Sensor	The outside air dry bulb temperature and enthalpy are compared with the temperature shutoff set point and return air enthalpy. If both OA enthalpy and RA enthalpy are higher than the enthalpy high limitation, then free cooling is prohibited. If OA enthalpy or RA enthalpy is lower than the enthalpy high limitation, outside air enthalpy is lower than the return-air enthalpy, and the outside air dry bulb temperature is lower than the set temperature shutoff set point, then outside air can be used for economizing.

Damper Modulation During Free Cooling

Once outside air is suitable for free cooling, the controller modulates the damper based on MAT (mixed air temperature, default) or OAT (outside air temperature). Refer to Table 8.

If MAT is used when free cooling is enabled, then MAT set point (**3MAT SET**, configurable in Parameter Settings — Advanced — see page 51) is used for MAT modulating. When MAT falls below the anti-freeze set point (**3FRZ PROT**), the damper either fully closes or opens to the minimum position (configurable in Parameter Settings — Advanced — see page 51).

1. If MAT is lower than MAT set point, then the damper is modulated to maintain MAT set point, toward fully closed or open to the minimum position based on occupancy status if MAT continues dropping.
2. If MAT is in the range [MAT set point, (MAT set point + neutral zone band [1°F (0.5°C) by default])], then the damper position does not change.
3. If MAT is higher than (MAT set point + neutral zone band), then the damper modulates toward fully open.
4. If MAT is 10°F (5.5°C) higher than MAT set point, then the damper fully opens to 100%.

If OAT is used when there is a cooling demand, then the damper can be opened to different positions depending on different outside air temperatures:

1. If outside air is higher than 50°F (10°C) but lower than the temperature shutoff set point, then the damper is fully open.
2. If outside air is higher than OAT lockout set point but lower than 50°F (10°C), then linear modulation is applied when only Cooling Stage 1 Input (Y1I) is ON. Result of the following formula indicate the damper's open position:

   ([OAT – OAT Lockout Set Point] / [50 – OAT Lockout Set Point]) * (80% – MIN POS) + MIN POS

   NOTE: When both free cooling and mechanical cooling are on, damper remains fully open regardless of the modulating logic.

Location-Based Shutoff Set Points

The economizer controller can get location-based temperature and enthalpy shutoff set points automatically if it is connected to the Climatix™ mobile application. Once a Wi-Fi/WLAN stick is plugged in, the economizer controller can establish network connection with the mobile application. The temperature and enthalpy shutoff set points obtained via the phone or tablet's GPS functionality can then be synchronized to the economizer controller.

Cooling Stage Operation

The economizer controller accepts inputs for 1 and 2-stage cooling inputs, and reroutes to the RTU through the relay connection Y1 and Y2.

The operation of the cooling stages is determined by the availability of Free Cooling provided by the economizer operation mode. See Cooling Stage I/O Logic tables, see Tables 9-10. Based on the use of Free Cooling, the operating modes are as follows:

- Y1 is Stage 1 Cooling Demand
- Y2 is Stage 2 Cooling Demand
- Free Cooling is always the first cooling stage
- Cooling Stage 1 call from the Commercial Thermostat (Y1) energizes the Y1 input to the Economizer Controller
- Cooling Stage 2 call from the Commercial Thermostat (Y2) energizes the Y2 input to the Economizer Controller

Table 9 — 1 and 2-Stage Cooling Stage I/O Logic

ECONOMIZER CONDITION MET	Y1	Y2	COOLING STAGE 1	COOLING STAGE 2
NO	On	On	On	On
NO	On	Off	On	Off
NO	Off	Off	Off	Off
YES	On	On	On	On/Off[a]
YES	On	Off	Off	Off
YES	Off	Off	Off	Off

NOTE(S):

a. If OAT ≤ MAT set point (**3MAT SET**), then Relay 2 is always **OFF** to disable Cooling Stage 2. Otherwise, if both stages of cooling (Y1 and Y2) are **ON** for more than a set time (15 minutes by default), Y2 remains **ON**, and the OAT is higher than MAT set point, then Relay 2 energizes to allow Y2 pass-through to enable Cooling Stage 2.

Table 10 — 2-Stage Cooling Stage I/O Logic

ECONOMIZER CONDITION MET	Y1	Y2	COOLING STAGE 1	COOLING STAGE 2
NO	On	On	On	On
NO	On	On	On	On
NO	On	Off	On	Off
NO	Off	Off	Off	Off
YES	On	On	On	On
YES	On	On	On	On/Off
YES	On	Off	Off	Off
YES	Off	Off	Off	Off

IMPORTANT: The Economizer Controller can tolerate thermostat wiring mismatch, e.g., Thermostat Y1 → Economizer Y2-IN, Thermostat Y2 → Economizer Y1-IN. The handling logic is Stage =Y1I + Y2I. For example, Y1O =1 if Stage > =1, Y2O =1 if Stage > = 2.

Multi-Speed Fan Support

The Economizer Controller supports connection to 1 and 2-speed fans. When the unit is equipped with a multi-speed fan, the damper responds to multiple fan speeds via multiple minimum positions **(MIN POS)** to keep minimum airflow. See Tables 11-13.

Table 11 — Damper MIN POS for 2-Speed Fan[a]

Y1	Y2	W1 or O/B	Spd L	Spd H	Pos L	Pos H
X	**—**	—	X	—	X	—
X	**X**	—	—	X	—	X
—	**—**	X	—	X	—	X

NOTE(S):

a. A multi-speed fan is not controlled by the economizer controller but an external logic board.

LEGEND

Pos L — Damper MIN POS for Low-Speed Fan
Pos H — Damper MIN POS for High-Speed Fan
Spd L — Low Speed (Fan)
Spd H — High Speed (Fan)

Table 12 — Different Fan Speeds with Different Configured Outputs[a]

FAN TYPE	1-SPEED COOLING[b]	2-STAGE COOLING[b]
1-SPEED FAN[c]	• Spd H (regardless of cooling demand, OCC=Yes)	• Spd H (regardless of cooling demand, OCC=Yes)
2-SPEED FAN[c]	• Spd L (0 or 1 cooling demand) • Spd H (2 cooling demands)	• Spd L (0 or 1 cooling demand) • Spd H (2 cooling demands)

NOTE(S):

a. If a single-speed fan connects to the controller, then it opens directly on the call of cooling/heating. The damper position is Pos H.
b. Configured by Y1O or Y2O.
c. Configured by 6FAN.

LEGEND

Spd L — Low Speed (Fan)
Spd H — High Speed (Fan)

Table 13 — Different Damper Minimum Positions with Different Configured Outputs

FAN TYPE	1-SPEED COOLING[a]	2-STAGE COOLING[a]
1-SPEED FAN[b]	• Pos H (regardless of cooling demand, OCC=Yes)	• Pos H (regardless of cooling demand, OCC=Yes)
2-SPEED FAN[b]	• Pos H (regardless of cooling demand, OCC=Yes)	• Pos L (0 or 1 cooling demand) • Pos H (2 cooling demands)

NOTE(S):

a. Configured by Y1O or Y2O.
b. Configured by 6FAN.

LEGEND

Pos L — Damper MIN POS for Low-Speed Fan
Pos H — Damper MIN POS for High-Speed Fan

If DCV (demand controlled ventilation) is enabled, then each fan speed corresponds to 2 damper position ventilation set points (**VENT MIN**, **VENT MAX**), e.g., Pos L corresponds to 2VENTMIN L... 2VENTMAX L. See Table 14 for Different Damper Position Setting with Different Configured Outputs with DCV enabled.

If CO_2 sensor is connected but DCV is disabled, then each fan speed corresponds to one minimum damper position ventilation set point. See Table 15 for Different Damper Position Setting with Different Configured Outputs with DCV disabled.

Table 14 — Different Damper Position Setting with Different Configured Outputs (DCV is Enabled)

FAN TYPE	1-STAGE COOLING[a]	2-STAGE COOLING[a]
1-SPEED FAN[b]	• 2VENTMIN H to 2VENTMAX H (regardless of cooling demand, OCC=Yes)	• 2VENTMIN H to 2VENTMAX H (regardless of cooling demand, OCC=Yes)
2-SPEED FAN[b]	• 2VENTMIN H to 2VENTMAX H (regardless of cooling demand, OCC=Yes)	• 2VENTMIN L to 2VENTMAX L (0 or 1 cooling demand) • 2VENTMIN H to 2VENTMAX H (2 cooling demands)

NOTE(S):

a. Configured by Y1O or Y2O.
b. Configured by 6FAN.

Table 15 — Different Damper Position Setting with Different Configured Outputs (DCV is Disabled, CO_2 sensor is connected)

FAN TYPE	1-STAGE COOLING[a]	2-STAGE COOLING[a]
1-SPEED FAN[b]	• 2VENTMIN H (regardless of cooling demand, OCC=Yes)	• 2VENTMIN H (regardless of cooling demand, OCC=Yes)
2-SPEED FAN[b]	• 2VENTMIN H (regardless of cooling demand, OCC=Yes)	• 2VENTMIN L (0 or 1 cooling demand) • 2VENTMIN H (2 cooling demands)

NOTE(S):

a. Configured by Y1O or Y2O.
b. Configured by 6FAN.

Cooling Delay via Increasing Fan Speed

If there is cooling demand while outside air is suitable for economizing, then the economizer controller tries to increase fan speed to maximize the use of outside air first. If the cooling demand is not reached within a set time, then mechanical cooling will be enabled.

Typical field application:

1. Prerequisites:
   a. Outside air is suitable for economizing and free cooling is ON.
   b. Fan connected to the controller supports multiple speeds. Cooling delay function does not work if only a one-speed fan is connected to the controller.
2. If it is a 2-speed fan and there are 2 cooling demand inputs/outputs, when Y1-Input is called, the controller sets fan speed to Speed Low. Damper is fully open (100%).

   If Y2-Input is also called, then the controller increases fan speed to Speed High and starts fan delay (**2FAN DLY**) time. After the delay time runs out, the controller starts Y1-Output.

Demand Controlled Ventilation (DCV)

If a field-installed CO_2 sensor is connected to the EconomizerONE controller, then a demand-controlled ventilation strategy will operate automatically. As the CO_2 level in the space increases above the set point (on the EconomizerONE controller), the minimum position of the dampers will be increased proportionally until the Maximum Ventilation setting is reached. As the space CO_2 level decreases because of the increase in fresh air, the outdoor damper will follow the higher demand condition from the DCV mode or from the free cooling mode.

The controller modulates the outside air damper based on the CO_2 level through the ppm value selected between the range of 500 and 2000 ppm. The measured CO_2 concentration value is compared with the set DCV set point. If the measured CO_2 concentration value is below the DCV set point, keep the damper to the minimum position. Otherwise, enable DCV. Once DCV is enabled, the DCV PID starts to run to control the indoor CO_2 concentration value towards the DCV set point. The damper opens to the maximum position.

NOTE: DCV is disabled if the controller receives no occupancy signal.

DCV operation is available in Occupied and Unoccupied periods with EconomizerONE system. However, a control modification will be required on the unit system to implement the Unoccupied period function. Refer to controller accessory installation instruction manual for further controls and command operation information.

High Humidity Limitation

The economizer controller applies high limit of humidity to enthalpy-based economizing. When the OA dew point is below the dew point set point, enthalpy-based economizing is available. Otherwise, enthalpy-based economizing is unavailable.

Anti-Freeze Protection

The economizer controller initiates the anti-freeze protection if MAT or OAT temperature falls below the anti-freeze set point.

MAT-Based Anti-Freeze Protection

1. If MAT temperature falls below the anti-freeze set point (**3FRZ PROT**) and:

- If unit type is conventional unit and cooling/heating conventional operation mode is enabled, then the controller closes both damper and compressor.
- If unit type is heat pump and heat pump operation mode is enabled, then the controller closes the damper.

2. If the MAT sensor fails, MAT is substituted by OAT to continue the anti-freeze assessment. If OAT sensor also fails, then the controller closes the damper immediately.

OAT-Based Anti-Freeze Protection

If OAT temperature falls below the OAT lockout set point (3OAT LOCK) and:

1. If unit type is conventional unit and cooling/heating conventional operation mode is enabled, then the controller stops the compressor from running.
2. If unit type is heat pump and heat pump operation mode is enabled, then the controller compressor is bypassed.

Exhaust Fan Operation

Up to 2 exhaust fans can be connected to the economizer controller.

- If Exhaust Fan 1 is connected and configured, then Exhaust Fan 1 parameter group (L, M, and H) is available, depending on fan configuration.

- If Exhaust Fan 2 is connected and configured, then Exhaust Fan 2 parameter group (L, M, and H) is available, depending on fan configuration.
- The controller energizes Exhaust Fan Relay 1 and Exhaust Fan Relay 2 if the damper position reaches Exhaust Fan 1 parameter setting and Exhaust Fan Relay 2 parameter setting respectively. The selection of L, M, or H matches the current fan speed.

NOTE: If terminal ACT-FB is configured, then the damper position is the damper feedback position. If feedback signal is unavailable, then it is the simulated position.

Occupancy Input

The economizer controller can receive an occupancy signal from the connected thermostat or work under Occupied mode all the time. This is configurable in the Thermostat setup from Climatix™ mobile application or under the menu of I/O Configuration on the inbuilt display. See "Parameter Settings — I/O Configurations" on page 51 for more information.

IMPORTANT: On the call of cooling, when the controller is configured to receive signal from the thermostat but the thermostat is working under the Unoccupied mode, the damper is fully closed if outside air is not suitable for economizing. If outside air is suitable for economizing, then the damper is fully open.

Pre-occupancy Purge

The Pre-Occupancy purge demand comes from the configuration of the Auxiliary features in Climatix™ mobile application or **6AUX2-I** under the menu of I/O Configuration on the inbuilt display.

During pre-occupancy purge on the call of heating, or when there is no cooling/heating demand, the damper position is MIN POS.

During pre-occupancy purge on the call of cooling, the damper position is MIN POS if outside air is not suitable for economizing. If outside air is suitable for economizing, then the damper is fully open.

Airflow Commissioning

Airflow measurement station (differential pressure signal) can connect to the controller temporarily to run airflow commissioning to calculate, calibrate, and store 4 fan speed characteristic curves automatically at damper positions 40%, 60%, 80%, and 100%. The controller places the damper to a proper position to meet minimum or any other airflow requests in cfm. Users can enable this function only from the mobile application if the related function is available in the current mobile application version.

Fault Detection and Diagnostics

The economizer controller can detect and diagnose free cooling faults, sensor operation faults, and damper modulating faults. It can also report anti-freeze and shutdown notifications and actuator errors. Following is a list of all detectable or reportable information:

- Sensor disconnected or has no signal.
- Sensor short or high signal (under range or over range).
- Not economizing.
- Unexpected economizing.
- Excess outdoor air.
- Damper not modulating.
- Input power monitor and brownout. After detecting brownout, the economizer controller enters the brownout protection mode and disables all of the relay outputs.
- Anti-freeze notifications.
- Shutdown notifications.
- Actuator errors.
- Leaving air temperature is too low or too high.
- Cooling/heating error.
- Damper actuator cycle count. Parameter **1ACT CNT** indicates number of times actuator has cycled. It is resettable via HMI item **8ACT CNT RESET**.

IMPORTANT: The first 6 faults are detectable via LEDs or alarm reports on the LCD. See LED Indication on page 39 and Alarms on page 52 for fault indications. These faults can also be displayed in the Operating section of the Climatix™ mobile application.

Firmware Update

NOTE: Back up configurations before firmware update. All the previous configuration data are erased after firmware update.

NOTE: Contact Application Engineering for more information on support for firmware.

IMPORTANT: If the controller enters the configuration state for the convenience of I/O configurations, then users can manually switch to the running state after finishing configurations. To do so, press Enter + Up at the same time, then press Enter to confirm the switch after 8RUN STATE appears on the LCD.

⚠ WARNING

Failure to follow this caution may result in damage to equipment. Be sure to allow enough time for compressor startup and shutdown between checkout tests so that the compressors do not short-cycle.

Mounting Devices Connected to the Economizer Controller

Devices like damper actuators, sensors (temperature sensor, humidity sensor, combination temperature and humidity sensor, CO_2 sensor), thermostats, and exhaust fans can be connected to the economizer controller. For information on how to mount the devices, see the device's installation instructions. See Fig. 68 and Table 16 for economizer controller wiring details.

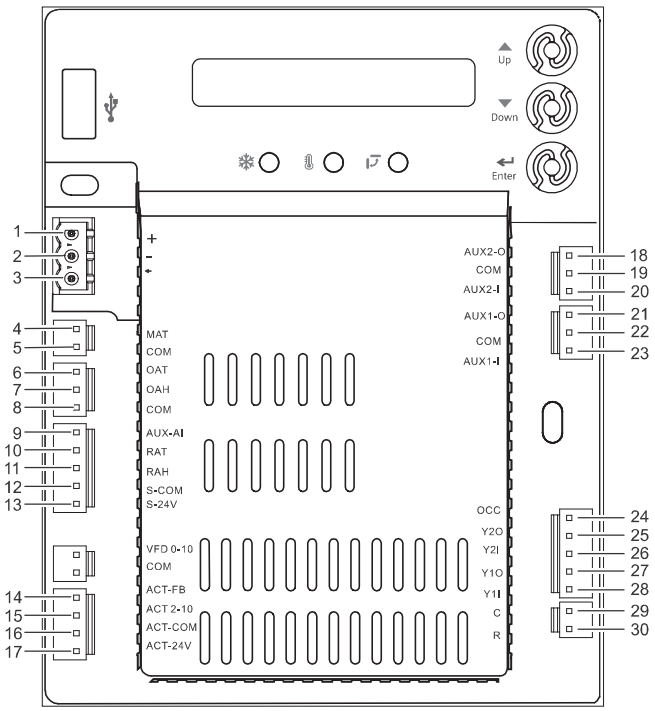

Fig. 68 — Economizer Control Wiring

Table 16 — Economizer Control Wiring Settings

NO.	LABEL	TYPE	DESCRIPTION
1	+	RS485 Modbus A	Line A
2	-	RS485 Modbus B	Line B
3	¬	GND_ISO	Earth Ground
4	MAT	Type II NTC 10K or 0-10 vdc	Mixed or Discharge Air Temperature Sensor
5	COM	COM	Mixed or Discharge Air Temperature Sensor Common
6	OAT	Type II NTC 10K or 0-10 vdc	Outside Air Temperature Sensor
7	OAH	0-10 vdc or 4-20mA	Outside Air Relative Humidity Sensor
8	COM	COM	Outside Air Temperature Sensor or Outside Air Relative Humidity Sensor Common
9	AUX-AI	0-10 vdc, 2-10 vdc or 0-5 vdc	Air Quality Sensor or Pressure Sensor
10	RAT	Type II NTC 10K or 0-10 vdc	Return Air Temperature Sensor
11	RAH	0-10 vdc or 4-20mA	Return Air Relative Humidity Sensor
12	S-COM	COM	24 vac Common
13	S-24V	24 vac	24 vac Power Out to Sensors
14	ACT-FB	2-10 vdc	Damper Actuator Feedback
15	ACT2-10	2-10 vdc	Damper Actuator Output
16	ACT-COM	COM	Damper Actuator Output Common
17	ACT-24V	24 vac	24 vac Power Out to Damper Actuator
18	AUX2-O	24 vac OUT	Configurable: • Exhaust Fan (1 or 2) • System Alarm Output (Title 24)
19	COM	COM	24 vac Common
20	AUX2-I	24 vac IN	Configurable: • Shut Down • Heat Conventional (W1) • Heat Pump Changeover (reversing valve OB) • Pre-Occupancy
21	AUX1-O	24 vac OUT	Configurable: • Exhaust Fan (1 or 2) • System Alarm Output (Title 24)
22	COM	COM	24 vac Common
23	AUX1-I	24 vac IN	Configurable: • Shut Down • Heat Conventional (W1) • Heat Pump Changeover (reversing valve OB) • Pre-Occupancy
24	OCC	24 vac IN	Occupancy Input
25	Y2O	24 vac OUT	Cooling Stage 2 Output to Stage 2 Mechanical Cooling
26	Y2I	24 vac IN	Cooling Stage 2 Input from Commercial Thermostat
27	Y1O	24 vac OUT	Cooling Stage 1 Output to Stage 1 Mechanical Cooling
28	Y1I	24 vac IN	Cooling Stage 1 Input from Commercial Thermostat
29	C	COM	24 vac Common
30	R	24 vac	24 vac Power

Connecting Peripheral Devices to the Economizer Controller

See Fig. 69-73 for wiring details.

- Outside Air: Connect to the OAT and COM terminals of the device.
- Return Air (Differential): Connect to the RAT and S-COM terminals of the device.
- Mixed Air: Connect to the MAT and COM terminals of the device.

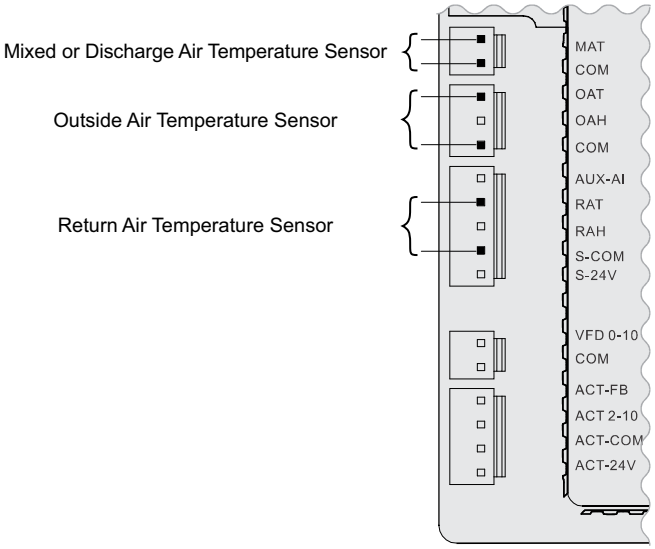

Fig. 69 — Temperature Sensor Connection

- Outside Air Relative Humidity: Connect to the OAH and COM terminals of the device.
- Return Air Relative Humidity: Connect to the RAH and S-COM terminals of the device.

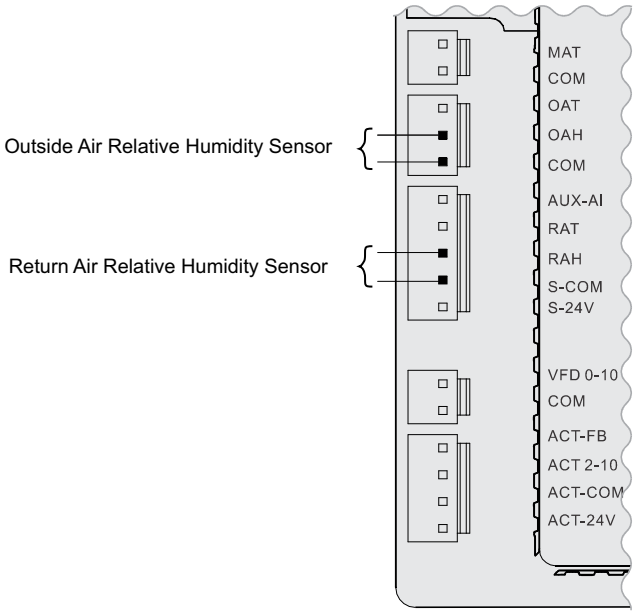

Fig. 70 — Relative Humidity Sensor Connection

- Outside Combination Temperature/ Humidity: Connect to the OAT, COM, and OAH terminals of the device.
- Return Combination Temperature/ Humidity: Connect to the RAT, S-COM, and RAH terminals of the device.

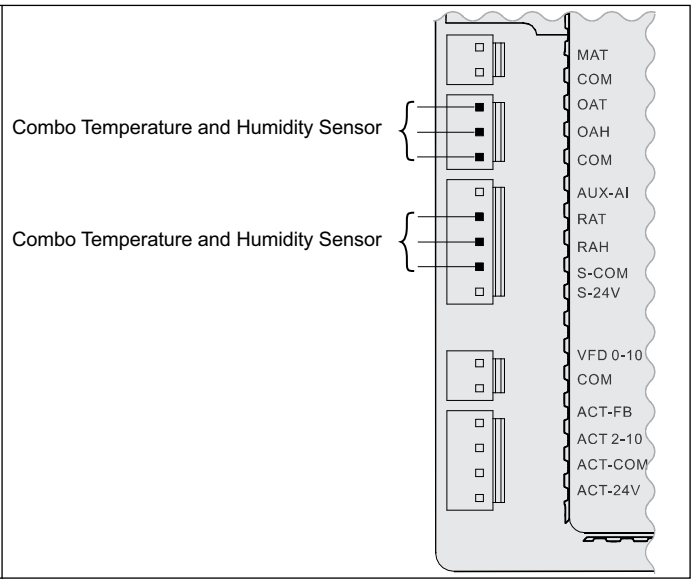

Fig. 71 — Combination Temperature/Humidity Sensor Connection

- Connect to the AUX-AI, S-COM, and S-24V terminals of the device.

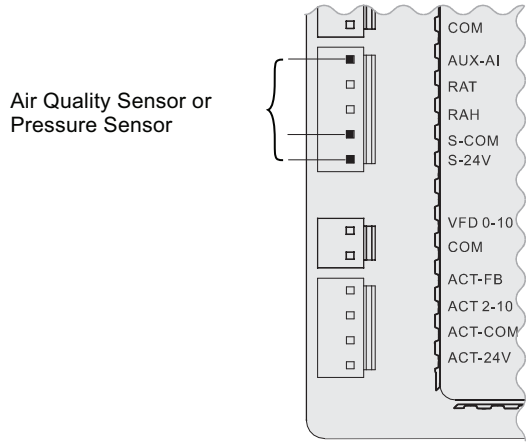

Fig. 72 — CO_2/Pressure Sensor Connection

- Connect to the ACT 2-10, ACT-COM, and ACT-24V terminals of the device.

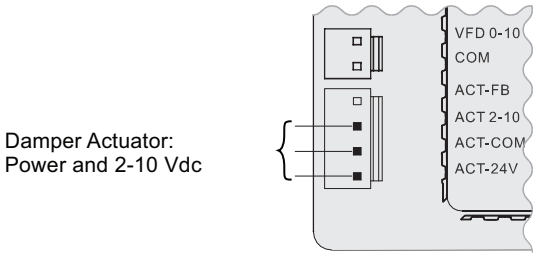

Fig. 73 — Damper Actuator Connection

SETUP AND CONFIGURATION

IMPORTANT: Before setup and configuration, it is recommended to obtain some location-based values, such as shutoff points, or utilize the location services in the Climatix™ mobile application.

Set up and configure the economizer controller before putting it into usage. This can be accomplished by using the Climatix™ mobile application or the inbuilt display. After sensor, compressor, thermostat, or actuator is connected to the economizer controller, values/statuses are displayed in the Operating section of the mobile application and on the LCD. Users can manually change basic and advanced settings, configure I/Os, and test the damper operation and any configured outputs by modifying the corresponding parameter values in the local device or mobile application. See Tables 17-24 for a complete list of all parameters that users can find on the LCD display. Refer to it during the setup and configuration process.

NOTE: For all units, the Climatix application login is: **Administrator**. For units coming from the factory with CO_2 configuration or single enthalpy (control mode 3), the controller password is OneBT2.1. For all other units, use the controller password OneBT.

NOTE: Parameters and display menus may display differently/dynamically if different applications are configured. See Tables 17-24.

IMPORTANT: Not all operations are available on the local POL 224. For example, users can only obtain shutoff set points and perform cfm commissioning via the Climatix™ mobile application. Setup and configuration on the local device are only recommended if operations from the mobile application are unavailable. Check the mobile application for all operations that can be performed from the mobile application end.

IMPORTANT: By connecting the RS485 port to a PC, all parameters are also readable or writable from PC tools such as Modbus Poll.exe via Modbus®[a] and Yabe.exe via BACnet™[a] MSTP (Bps 38400 [default], Bps 9600, Bps 19200, Bps 115200). Note that an external End of Line (EOL) element is required to achieve Baud Rate 115200 at a maximum cable length of 4000 ft (1.2 km).

NOTE(S):

a. Third-party trademarks and logos are the property of their respective owners.

Table 17 — Status Display

PARAMETER	DESCRIPTION	VALUE
1FREECOOL	Indicates if the system can use outdoor air for free cooling.	YES NO
1ECON ENAB	Indicates if outdoor air is being used for the first stage of cooling.	
1OCCUPIED	Indicates if the space is occupied. If users choose **ALWAYS** for **6OCC** when configuring I/Os, the parameter value is **YES**; if users keep the default selection **T-STAT** for **6OCC** and the controller receives 24-v signal from OCC input, the value is **YES**. Otherwise, the value is **NO**.	
1Y1-IN	Y1-IN call from thermostat for Cooling Stage 1.	ON OFF
1Y1-OUT	Y1-OUT signal to compressor for Cooling Stage 1.	
1Y2-IN	Y2-IN call from thermostat for Cooling Stage 2.	
1Y2-OUT	Y2-OUT signal to compressor for Cooling Stage 2. **Dynamic item:** Appears only if Y2-OUT terminal is configured.	
1AUX1-I	Aux1-IN signal. **Dynamic item:** Appears only if Aux1-In terminal is configured.	
1AUX1-O	Aux1-OUT signal. **Dynamic item:** Appears only if Aux1-OUT terminal is configured.	
1AUX2-I	Aux2-IN signal. **Dynamic item:** Appears only if Aux2-In terminal is configured.	
1AUX2-O	Aux2-OUT signal. **Dynamic item:** Appears only if Aux2-OUT terminal is configured.	
1COMP STAGE	Indicates compressor current stage.	Off 1 2 3
1HEAT ENAB	Indicates if heating is enabled.	YES NO
1MIX AIR LOW	Indicates if the anti-freeze protection function is enabled for a mixed air temperature sensor. If the detected air temperature is lower than the anti-freeze protection set point (3FRZ PROT), the parameter value is **YES**. Otherwise, it is **NO**.	
1MAT PRES	Indicates the present value of the mixed air temperature (MAT) sensor. **Dynamic item:** Appears only if **MAT** or **AUTO** is selected for **3DIF T LOC** under Parameter Settings — Advanced on page 51.	The corresponding detected value is displayed on the LCD.
1LAT PRES	Indicates the present value of the leaving air temperature (LAT) sensor. **Dynamic item:** Appears only if **LAT** or **AUTO** is selected for **3DIF T LOC**.	
1OAT PRES	Indicates the present value of the outdoor air temperature (OAT) sensor. **Dynamic item:** Appears only if an OAT sensor is configured.	
1OAH PRES	Indicates the present value of the outdoor air relative humidity (OAH) sensor. **Dynamic item:** Appears only if an OAH sensor is configured.	
1RAT PRES	Indicates the present value of the return air temperature (RAT) sensor. **Dynamic item:** Appears only if a RAT sensor is configured.	
1RAH PRES	Indicates the present value of the return air relative humidity (RAH) sensor. **Dynamic item:** Appears only if a RAH sensor is configured.	
1CO2 PRES	Indicates the present value of the CO_2 sensor. **Dynamic item:** Appears only if a CO_2 sensor is configured.	
1DCV STATUS	Indicates the demand controlled ventilation (DCV) status. **Dynamic item:** Appears only if a CO_2 sensor is configured. Displays ON if the measured CO_2 concentration value is above the DCV set point and OFF if below the DCV set point.	ON OFF
1FAN SPD LV	Indicates the current fan speed status (low, medium, or high). If a one-speed fan is connected and configured, this item is invisible. **Dynamic item:** Appears only if "**6FAN**" is configured as "**2SPEED**" under Parameter Settings — I/O Configurations on page 51.	L H
1ACT OUT	Indicates current position of damper actuator in v.	The corresponding detected value is displayed on the LCD.
1ACT FB	Indicates feedback signal of damper actuator in v.	
1ACT POS	Indicates current position of damper actuator in % Open.	
1ACT CNT	Indicates number of times actuator has cycled (1 cycle = 180 degrees of movement in any direction). Resettable via HMI item **8ACT CNT RESET** under Enter Running State on page 53.	
1EQUIP	Indicates the equipment type. If **HP(O)** or **HP(B)** is chosen for **6AUX1-I**, the parameter value is **HP(O)** or **HP(B)** respectively. If neither is chosen, the value is **CON RTU**.	HP(O) HP(B) CON RTU
1OAT LOCK	Indicates status of the OAT cooling lockout function.	NO LCKOUT OVRD
1INS	Indicates the installation date of the Economizer Controller. If the installation date is incorrect, press Enter to change and confirm month, date and year.	—

Table 18 — Parameter Settings — Basic

PARAMETER	DESCRIPTION	RANGE	DEFAULT
2 TEMP OFF	Temperature shutoff set point can be obtained automatically if a smartphone or tablet is connected to the network provided by a Wi-Fi/WLAN stick plugged into the Economizer Controller and the mobile application is installed on the phone or tablet. This can also be a manually defined set point.	48...80°F; increment by 1	63°F
2ENTH OFF	Enthalpy shutoff set point can be obtained automatically if a smartphone or tablet is connected to the network provided by a Wi-Fi/WLAN stick plugged into the Economizer Controller and the mobile application is installed on the phone or tablet. This can also be a manually defined set point. **Dynamic item:** Appears only if an OAH sensor is configured.	22...30 Btu/lbm; increment by 1	28 Btu/lbm
2DVC	Demand controlled ventilation set point can be obtained automatically if a smartphone or tablet is connected to the network provided by a Wi-Fi/WLAN stick plugged into the Economizer Controller and the mobile application is installed on the phone or tablet. This can also be a manually defined set point. **Dynamic item:** Appears only if a CO_2 sensor is configured.	300...2000PPM; increment by 100	1100PPM
2FAN L ACT	Damper minimum position when fan runs at a low speed. **Dynamic item:** Appears only if "**6FAN**" is configured as "**2SPEED**" under Parameter Settings — I/O Configurations on page 51.	2...10V; increment by 0.1	3.6V
2FAN H ACT	Damper minimum position when fan runs at a high speed. **Dynamic item:** Appears only if "**6FAN**" is configured as "**1SPEED**" or "**2SPEED**".	2...10V; increment by 0.1	2.8V
2VENTMAX L	DCV maximum position when fan runs at a low speed. **Dynamic item:** Appears only if a CO_2 sensor is configured and "**6FAN**" is configured as "**2SPEED**".	2...10V; increment by 0.1	3.6V
2VENTMAX H	DCV maximum position when fan runs at a high speed. **Dynamic item:** Appears only if a CO_2 sensor is configured and **"6FAN"** is configured as "**1SPEED**" or "**2SPEED**".	2...10V; increment by 0.1	3.6V
2VENTMIN L	DCV minimum position when fan runs at a low speed. **Dynamic item:** Appears only if a CO_2 sensor is configured and **"6FAN"** is configured as "**2SPEED**".	2...10V; increment by 0.1	3.1V
2VENTMIN H	DCV minimum position when fan runs at a high speed. **Dynamic item:** Appears only if a CO_2 sensor is configured and "**6FAN**" is configured as "**1SPEED**" or "**2SPEED**".	2...10V; increment by 0.1	2.3V
CFM COMM	Air Flow Chart: **CFM commissioning** can only be initiated from the mobile application. When **CFM commissioning** is in progress, the local device reads "**CFM COMM**".	—	—
2DEGREES	Temperature unit (°F or °C).	—	°F
2FAN	Fan cfm.	100...50,000cfm; increment by 100	5000cfm
2EX1 L	Exhaust Fan 1 low-speed parameter setting. **Dynamic item:** Appears only if: • Exhaust Fan 1 is configured. • "**6FAN**" is configured as "**2SPEED**".	0...100%; increment by 1	65%
2EX1 H	Exhaust Fan 1 high-speed parameter setting. **Dynamic item:** Appears only if: • Exhaust Fan 1 is configured. • "**6FAN**" is configured as "**1SPEED**" or "**2SPEED**".	0...100%; increment by 1	50%
2EX2 L	Exhaust Fan 2 low-speed parameter setting. **Dynamic item:** Appears only if: • Exhaust Fan 2 is configured. • "**6FAN**" is configured as "**2SPEED**".	0...100%	80%
2EX2 H	Exhaust Fan 2 high-speed parameter setting. **Dynamic item:** Appears only if: • Exhaust Fan 2 is configured. • "**6FAN**" is configured as "**1SPEED**" or "**2SPEED**".	0...100%; increment by 1	75%
2THL	Temperature high limitation. **Dynamic item:** Appears only if an RAT sensor is configured.	0...100%; increment by 1	83%
2EHL	Enthalpy high limitation. **Dynamic item:** Appears only if an RAH sensor is configured.	30...50 Btu/lbm, increment by 1	33 Btu/lbm
2FAN DLY	Cooling delay via increasing fan speed.	0...30 min; increment by 1	5 min.

Table 19 — Parameter Settings — Advanced

PARAMETER	DESCRIPTION	VALUE/RANGE	DEFAULT
3FREEZE POS	Anti-freeze protection damper position (closed or minimum).	CLO MIN	CLO
3SD ACT POS	Damper position during shutdown (open or closed).	CLO OPN	CLO
3DIF T LOC	MAT sensor location: • Choose **MAT** if the sensor is installed before the DX (Direct Expansion) coil. • Choose **LAT** if the sensor is installed after the DX coil. • Choose **AUTO** to let the Economizer Controller automatically detect the location.	MAT LAT AUTO	LAT
3LAT LOW	Low limit of leaving air temperature. **Dynamic item:** Appears only if **LAT** or **AUTO** is selected for **3DIF T LOC**.	35...65°F; increment by 1	45°F
3LAT HIGH	High limit of leaving air temperature. **Dynamic item:** Appears only if **LAT** or **AUTO** is selected for **3DIF T LOC**.	70...180°F; increment by 1	80°F
3OAT CAL	OAT sensor calibration.	–2.5...2.5°F; increment by 0.5	0°F
3RAT CAL	RAT sensor calibration. **Dynamic item:** Appears only if an RAT sensor is configured.	–2.5...2.5°F; increment by 0.5	—
3OAH CAL	OAH sensor calibration. **Dynamic item:** Appears only if an OAH sensor is configured.	–10...10%; increment by 0.5	0%
3RAH CAL	RAH sensor calibration. **Dynamic item:** Appears only if an RAH sensor is configured.		
3MAT CAL	MAT or LAT sensor calibration.	–2.5...2.5°F; increment by 0.5	0°F
3MAT SET	Set point of MAT or LAT sensor.	38...70°F; increment by 1	53°F
3FRZ PROT	Anti-freeze protection set point of MAT sensor.	35...55°F; increment by 1	45°F
3ACT TOLR	Actuator tolerance setpoint between output (in percent) and feedback (in percent).	0...15%; increment by 1	8%
3OAT LOCK	OAT lockout set point for anti-freeze protection.	–45...80°F; increment by 1	32°F
3OAT LCKOVRD	When OAT LOCKOUT is enabled, choose to override the cooling lockout function or not.	YES NO	NO
3OAT LOCKODLY	Indicates the overridden time if "**YES**" is selected for "**3OAT LCKOVRD**".	0...300 min; increment by 1	45 min.

Table 20 — Parameter Settings — I/O Configurations

PARAMETER	DESCRIPTION	VALUE	DEFAULT
6OCC	Configures if occupancy status receives signal from the connected thermostat or is displayed as ALWAYS in the Economizer Controller.	T-STAT ALWAYS	T-STAT
6AUX1-I	Auxiliary DI-1. Configurable as: • None. • Heat Conventional (W1) from thermostat. • Heat pump (reversing valve O). • Heat pump (reversing valve B). • Pre-occupancy signal from thermostat. • Shutdown signal from unit.	NONE HP(O) HP(B) PREOCC SHUTDWN	W1
6AUX2-I	Auxiliary DI-2. Configurable as: • None. • Heat stage 1 (W1) from thermostat. • Heat pump (reversing valve O). • Heat pump (reversing valve B). • Pre-occupancy signal from thermostat. • Shutdown signal from unit. **NOTE:** Whichever is chosen for 6AUX1-I does not appear in the list of 6AUX2-I.	NONE W1 HP(O) HP(B) PREOCC SHUTDWN	NONE
6OAT SIG	Configures signal type of OAT sensor.	0-10V NTC10K	NTC10K
6RAT SIG	Configures signal type of RAT sensor.	0-10V NTC10K NONE	NONE
6OAH SIG	Configures signal type of OAH sensor.	0-10V 4-20mA NONE	NONE
6RAH SIG	Configures signal type of RAH sensor.		
6MAT SIG	Configures signal type of MAT or LAT sensor.	0-10V NTC10K	NTC10K
6AUX-AI1	Auxiliary AI-1. Configurable as: • CO_2 sensor. • Static pressure (temporarily for CFM commissioning) sensor. • None.	PRESSURE CO2 NONE	NONE
6X-AI1 SIG	Configures CO_2 sensor type. **Dynamic item**: Appears only if "**CO2**" is selected for "**6AUX-AI1**".	0-10V 2-10V 0-5V	0-10V
6CO2 Rng L	Configures the low limit of CO_2 measuring range. **Dynamic item**: Appears only if "**CO2**" is selected for "**6AUX-AI1**".	0...500; increment by 10	0
6C02 Rng H	Configures the high limit of CO_2 measuring range. **Dynamic item**: Appears only if "**CO2**" is selected for "**6AUX-AI1**".	1000...3000; increment by 50	2000

Table 20 — Parameter Settings — I/O Configurations (cont)

PARAMETER	DESCRIPTION	VALUE	DEFAULT
6AUX-AI2	Choose **ACT FB** if feedback signal is available from the connected damper actuator. Otherwise, choose **NONE**.	ACT FB NONE	ACT FB
6Y2O	Choose "**COOL 2**" if Cooling Stage 2 is available (another compressor is connected to the Economizer). Otherwise, choose "**NONE**".	COOL 2 NONE	COOL 2
6AUX1-O	Auxiliary DO-1. Configurable as: • None. • Exhaust fan (1 or 2). • Alarm output to thermostat (Title 24).	NONE ALARM EXHAUST	EXHAUST
6AUX2-O	Auxiliary DO-2. Configurable as: • None. • Exhaust fan (1 or 2). • Alarm output to thermostat (Title 24). **NOTE:** Except for Exhaust Fan, whichever is chosen for 6AUX1-O does not appear in the list of 6AUX2-O.	NONE ALARM EXHAUST	ALARM
6RS485	Switch between MSTP and Modbus.	MSTP MODBUSSLV	MSTP

Table 21 — Alarm Parameters[a,b]

PARAMETER	DESCRIPTION
NO ALARM	No alarm is activated.
4MAT SEN ALARM	MAT sensor has failed, gone out of range or become disconnected.
4CO2 SEN ALARM	CO_2 sensor has failed, gone out of range or become disconnected.
4OAT SEN ALARM	OAT sensor has failed, gone out of range or become disconnected.
4OAH SEN ALARM	OAH sensor has failed, gone out of range or become disconnected.
4RAT SEN ALARM	RAT sensor has failed, gone out of range or become disconnected.
4RAH SEN ALARM	RAH sensor has failed, gone out of range or become disconnected.
4FREEZE ALARM	Anti-freeze notification when MAT sensor is below anti-freeze protection set point.
4RTU SHUTDOWN	Notification of Shutdown Active when SHUTDWN is chosen for 6AUX1-I or 6AUX2-I.
4ACTUATOR ALARM	Actuator gets disconnected or has failed.
4ACT UNDER V	Voltage received by the actuator is below expected range.
4ACT OVER V	Voltage received by the actuator is above expected range.
4ACT STALLED	Damper actuator stopped before achieving commanded position.
4ACT SLIPPING	Damper actuator slips after reaching commanded position.
4NOT ECON	Not Economizing when it should.
4ECON SHOULDNT	Economizing when it should not.
4EXCESS OA	Excess outdoor air. Outside air intake is significantly higher than it should be.
4LLA ALARM	Leaving air temperature is lower than the low limit (3LAT LOW).
4HLA ALARM	Leaving air temperature is higher than the high limit (3LAT HIGH).

NOTE(S):

a. All alarms are dynamic items. An alarm appears only if a related symptom mentioned above is detected.
b. An alarm activation triggers a general alarm, then the configured system alarm output (AUX1-O or AUX2-O) is activated. If there is no alarm, NO ALARM is displayed on the HMI.

Table 22 — Test Commands

PARAMETER	DESCRIPTION
7DAMPER MIN POS	Press Enter to test if the Economizer Controller can drive damper to minimum position.
7DAMPER CLOSE	Press Enter to test if the Economizer Controller can drive damper to 100% Closed.
7DAMPER OPEN	Press Enter to test if the Economizer Controller can drive damper to 100% Open.
7DAMPER ALL	Press Enter to perform all the above tests.
7DAMPER	Press Enter to test if the Economizer Controller can drive damper to the selected voltage.
7Y1O	Press Enter to test if the Economizer Controller can turn on or off the first stage of cooling (close or open relay Y1O).
7Y2O	Press Enter to test if the Economizer Controller can turn on or off the second stage of cooling (close or open relay Y2O).
7AUX1-O	Press Enter to test AUX1-O connection (close or open relay AUX1-O).
7AUX2-O	Press Enter to test AUX2-O connection (close or open relay AUX2-O).

Table 23 — Enter Running State

PARAMETER	DESCRIPTION
8RUN STATE	Change to Running State. Press Enter to confirm the change.
8ENTER RUN?	Confirm the change to Running State.
8FACTORY DEF	Perform factory reset. Press Enter to confirm the reset. (This action resets the controller password to default: OneBT.)
8DEF CONFIRM?	Confirm the factory reset.
8ACT CNT RESET	Damper count reset.
8VER x.x.x	Firmware version information such as 0.1.10.

Table 24 — Enter Configuration State and Restart

PARAMETER	DESCRIPTION
5CONFIG STATE	Change to Configuration State. Press Enter to confirm the change.
5ENTER CONFIG?	Confirm the change to Configuration State.
5RESTART	Restart the Economizer Controller. Press Enter to confirm the restart.
5CONF RESTART	Confirm the restart.

INSTALLING OPTIONAL HH57LW001 SINGLE OUTSIDE AIR ENTHALPY SENSOR

When using the HH57LW001 enthalpy sensor (see Fig. 74) for outside air changeover, the existing HH79NZ039 dry bulb sensor (see Fig. 75) must be removed. The enthalpy sensor will be mounted in the same location as the dry bulb sensor (see Fig. 76). When the enthalpy sensor's OA (Outside Air) temperature, enthalpy, and dew point are below their respective set points, outside air can be used for free cooling. When any of these are above their set point, free cooling will not be available. Enthalpy set points are configurable and create an enthalpy boundary according to the user's input. For additional details, see Fig. 77-78 and Table 25.

Harness 48TC005213 is required to be connected between the EconomizerONE harness in the return air chamber. Harness 48TC005213 has a 5-pin plug that connects directly to the HH57LW001 enthalpy sensor. The CRENTSEN001A00 accessory kit includes enthalpy sensor (HH57LW001) and associated 5-pin plug (48TC005213) and may be ordered as a finished good.

Enthalpy Control Sensor Configuration

The optional enthalpy control sensor (P/N: HH57LW001) communicates with the POL224 economizer controller using the 5-wire harness, 48TC005213. The HH57LW001 sensor can be used as a single outside air enthalpy, a differential return enthalpy, or a differential return temperature sensor. Refer to the base unit control wiring diagrams found earlier in this book to wire the HH57LW001 enthalpy sensor for each option. See Fig. 74 and Table 27 on page 56 to locate the wiring terminals for each enthalpy control sensor.

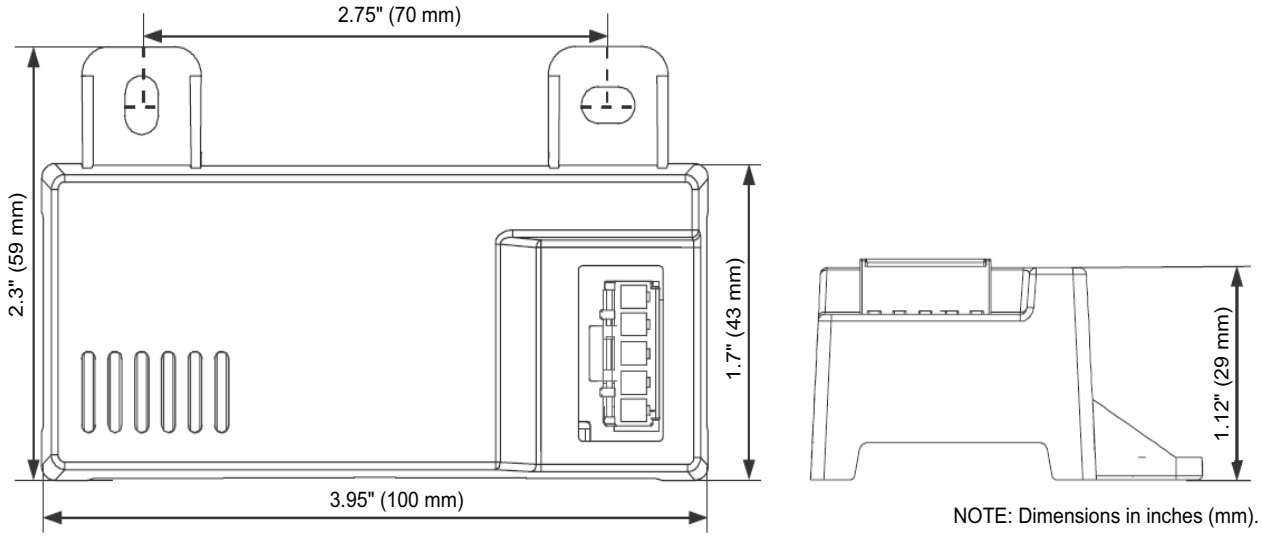

Fig. 74 — HH57LW001 Dimensional, Connection and Switching Information

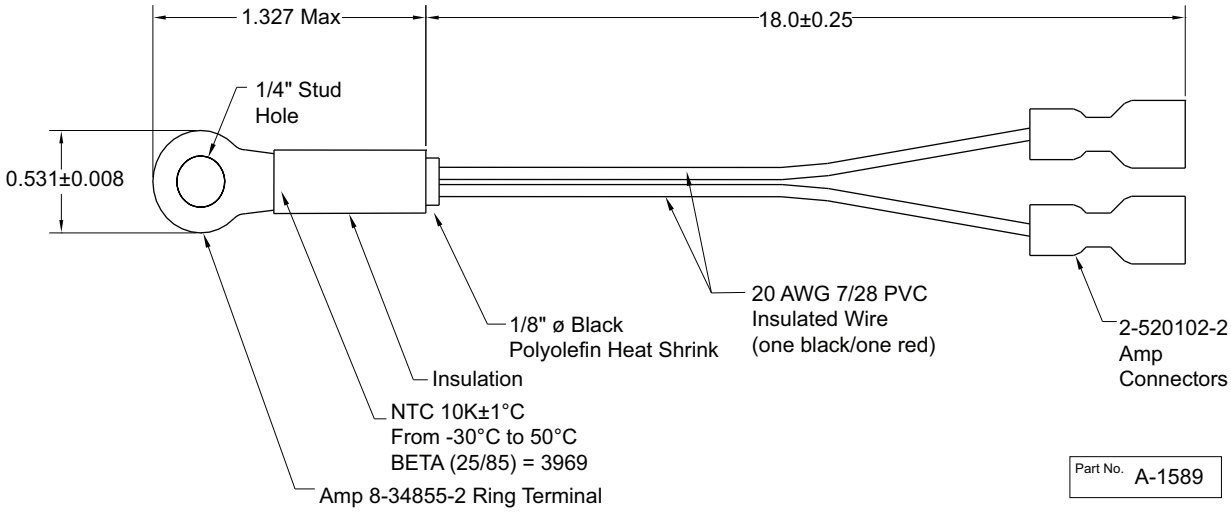

Fig. 75 — HH79NZ039 Dry Bulb and Mixed Air Sensor Wiring

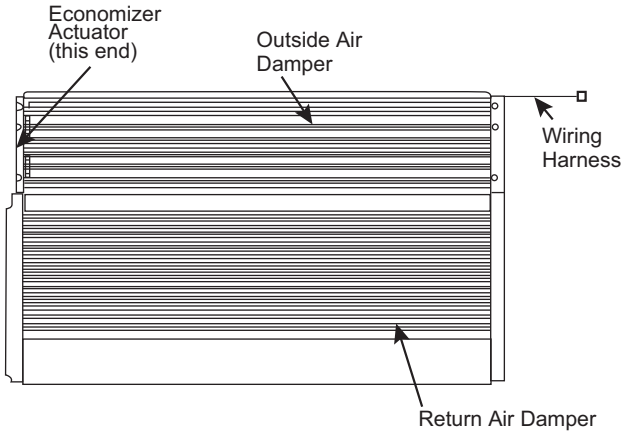

Fig. 76 — EconomizerONE System Component Locations

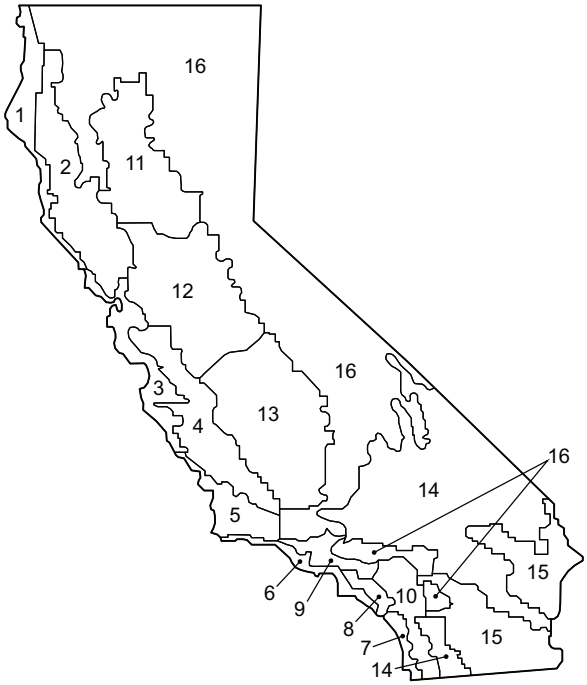

Fig. 77 — California Title 24 Zones

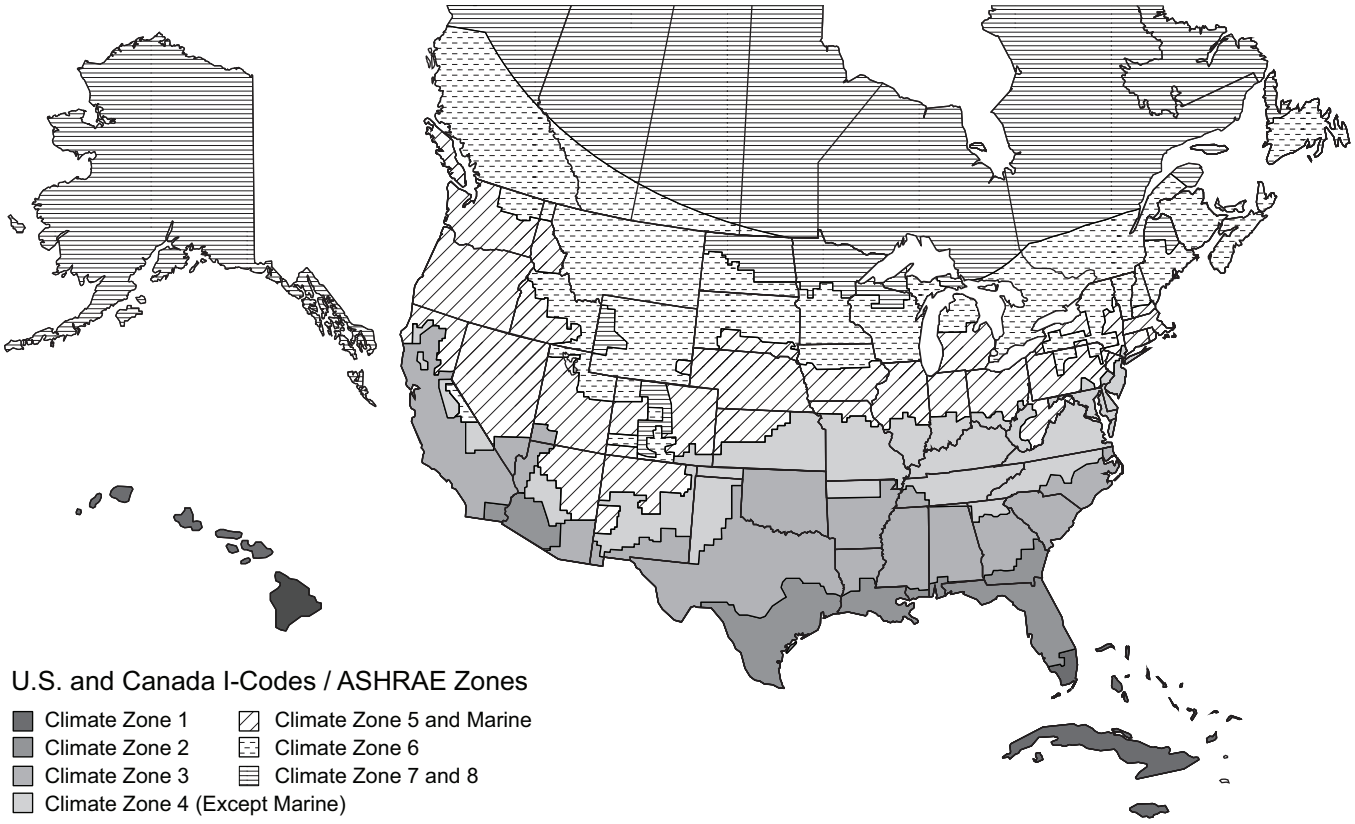

Fig. 78 — U.S. and Canada Climate Zones

Table 25 — Enthalpy Manual Entry Set Points for EconomizerONE Per Climate Zone

CLIMATE ZONES[a]	2 TEMP OFF	LOWEST SETTING	RH%	2 ENTH OFF	RH%	2THL	2EHL	RH%
1	65°F	22 Btu/lbm	43%	28 Btu/lbm	86%	83°F	33 Btu/lbm	48%
2	65°F	22 Btu/lbm	43%	28 Btu/lbm	86%	83°F	33 Btu/lbm	48%
3	65°F	22 Btu/lbm	43%	28 Btu/lbm	86%	83°F	33 Btu/lbm	48%
4	65°F	22 Btu/lbm	43%	28 Btu/lbm	86%	83°F	33 Btu/lbm	48%
5	70°F	22 Btu/lbm	28%	28 Btu/lbm	65%	83°F	33 Btu/lbm	48%
6	70°F	22 Btu/lbm	28%	28 Btu/lbm	65%	83°F	33 Btu/lbm	48%
7 and 8	75°F	22 Btu/lbm	19%	28 Btu/lbm	50%	83°F	33 Btu/lbm	48%
CALIFORNIA TITLE 24 ZONES[b]	**2 TEMP OFF**	**LOWEST SETTING**	**RH%**	**2 ENTH OFF**	**RH%**	**2THL**	**2EHL**	**RH%**
1	75°F	22 Btu/lbm	19%	28 Btu/lbm	50%	83°F	33 Btu/lbm	48%
2	73°F	22 Btu/lbm	22%	28 Btu/lbm	55%	83°F	33 Btu/lbm	48%
3	75°F	22 Btu/lbm	19%	28 Btu/lbm	55%	83°F	33 Btu/lbm	48%
4	73°F	22 Btu/lbm	22%	28 Btu/lbm	55%	83°F	33 Btu/lbm	48%
5	75°F	22 Btu/lbm	19%	28 Btu/lbm	50%	83°F	33 Btu/lbm	48%
6	71°F	22 Btu/lbm	28%	28 Btu/lbm	62%	83°F	33 Btu/lbm	48%
7	69°F	22 Btu/lbm	32%	28 Btu/lbm	68%	83°F	33 Btu/lbm	48%
8	71°F	22 Btu/lbm	28%	28 Btu/lbm	62%	83°F	33 Btu/lbm	48%
9	71°F	22 Btu/lbm	28%	28 Btu/lbm	62%	83°F	33 Btu/lbm	48%
10	73°F	22 Btu/lbm	22%	28 Btu/lbm	55%	83°F	33 Btu/lbm	48%
11	75°F	22 Btu/lbm	19%	28 Btu/lbm	50%	83°F	33 Btu/lbm	48%
12	75°F	22 Btu/lbm	19%	28 Btu/lbm	50%	83°F	33 Btu/lbm	48%
13	75°F	22 Btu/lbm	19%	28 Btu/lbm	50%	83°F	33 Btu/lbm	48%
14	75°F	22 Btu/lbm	19%	28 Btu/lbm	50%	83°F	33 Btu/lbm	48%
15	75°F	22 Btu/lbm	19%	28 Btu/lbm	50%	83°F	33 Btu/lbm	48%
16	75°F	22 Btu/lbm	19%	28 Btu/lbm	50%	83°F	33 Btu/lbm	48%
CONTROLLER DEFAULT SETTINGS	**2 TEMP OFF**	**—**	**—**	**2 ENTH OFF**	**—**	**2THL**	**2EHL**	**RH%**
DEFAULT SET POINTS	63°F	—	—	28 Btu/lbm	94%	83°F	33 Btu/lbm	48%

NOTE(S):

a. Refer to Fig. 78 for map of U.S. and Canada climate zones.
b. Refer to Fig. 77 for map of California Title 24 zones.

Economizers are shipped standard with an HH79NZ039 outside air dry bulb sensor (refer to Fig. 75). System default setting (high temp limit) is 63°F (17°C) and has a range of 48°F to 80°F (9°C to 27°C). Sensor is factory installed on economizer.

A second HH79NZ039 sensor is provided for mixed air temperature.

California high temperature setting requirements by region are shown in Table 26.

Enthalpy Settings (Enthalpy OPTION)

If installing the optional HH57LW001 enthalpy sensor, the HH79NZ039 dry bulb outside air sensor must first be removed. Wire sensor to harness 48TC005213 and the (5) wires from the harness to the EconomizerONE harness in the return air chamber. Harness 48TC005213 has a 5-pin plug that connects directly to the HH57LW001 enthalpy sensor. Refer to the base unit control wiring diagrams earlier in this book for wiring connections. Refer to Fig. 74 and see Table 27.

California's Title 24 High Temperature Limit Settings

California's Title 24 code requires a high temperature limit setting for all dry bulb outside air economizer changeover. The temperatures vary by the region within California. See Table 26 for high limit settings.

Table 26 — California Title 24 Regional High Limit Dry Bulb Temperature Settings[a]

DEVICE TYPE[b]	CLIMATE ZONES	REQUIRED HIGH LIMIT DESCRIPTION (ECONOMIZER OFF WHEN)
FIXED DRY BULB	1, 3, 5, 11-16	OAT exceeds 75°F (23.8°C)
	2, 4, 10	OAT exceeds 73°F (22.7°C)
	6, 8, 9	OAT exceeds 71°F (21.6°C)
	7	OAT exceeds 69°F (20.5°C)
DIFFERENTIAL DRY BULB	1, 3, 5, 11-16	OAT exceeds RA temperature
	2, 4, 10	OAT exceeds return air temperature –2°F (–18.8°C)
	6, 8, 9	OAT exceeds return air temperature –4°F (–20°C)
	7	OAT exceeds return air temperature –6°F (–21.1°C)
FIXED ENTHALPY[c] + FIXED DRY BULB	All	OAT exceeds 28 Btu/lb of dry air[b] or OAT exceeds 75°F (23.8°C)

NOTE(S):

a. This table is sourced from 2019 California Energy Code, Title 24, Part 6, Table 140.4-E Air Economizer High Limit Shut Off Control Requirements.
b. Only the high limit control devices listed are allowed to be used and at the set points listed. Others, such as Dew Point, Fixed Enthalpy, Electronic Enthalpy, and Differential Enthalpy Controls, may not be used in any climate zone for compliance with Section 140.4(e)1 unless approval for use is provided by the Energy Commission Executive Director.
c. At altitudes substantially different than sea level, the Fixed Enthalpy limit value shall be set to the enthalpy value at 75°F and 50% relative humidity. As an example, at an approximately 6,000 foot elevation, the fixed enthalpy limit is approximately 30.7 Btu/lb.

LEGEND

OAT — Outdoor-Air Thermostat
RA — Return Air

Table 27 — HH57LW001 Sensor Wiring Terminations

TERMINAL		TYPE	DESCRIPTION
NUMBER	LABEL		
1	TCOM	NTC 10k	Outside Air Temperature Sensor Output
2	TSIG	NTC 10k	Outside Air Temperature Sensor Output
3	HSIG	0-10 vdc	Outside Air Relative Humidity Sensor Output
4	HCOM	COMMON	Sensor 24-v Common Input
5	H24V	24 vac	Sensor 24-v Operating Voltage Input

CHECKOUT

Inspect all wiring connections at the economizer module's terminals, and verify compliance with the installation wiring diagrams. For checkout, review the Status of each configured parameter and perform the Test Commands tests (refer to Table 22).

For information about menu navigation and use of the keypad see Interface Overview on page 38.

⚠ WARNING

ELECTRIC SHOCK HAZARD

Failure to follow this warning could result in personal injury, property damage, or death.

Before performing service or maintenance operations on unit, always turn off main power switch to unit and install lock(s) and lockout tag(s). Unit may have more than one power switch. Ensure electrical service to rooftop unit agrees with voltage and amperage listed on the unit rating plate.

If any wiring changes are required, first be sure to remove power from the economizer module before starting work. Pay particular attention to verifying the power connection (24 vac).

Power Up

After the POL224 module is mounted and wired, apply power.

Initial Menu Display

On initial start up, "Welcome" displays on the economizer HMI screen. After a brief pause, the Parameter Settings — I/O Configuration (refer to Table 20) of the software appears, allowing the user to check that presets and default values are configured correctly.

Power Loss (Outage or Brownout)

All set points and advanced settings are restored after any power loss or interruption.

NOTE: All settings are stored in non-volatile flash memory.

Status

Use the Status menu (refer to Table 17) to check the parameter values for the various devices and sensors configured.

NOTE: For information about menu navigation and use of the keypad, see Interface Overview on page 38.

Checkout Tests

Use the Test Commands menu (refer to Table 22) to test the damper operation and any configured outputs. Only items that are configured are shown in the Test Commands menu.

NOTE: For information about menu navigation and use of the keypad, see Interface Overview on page 38.

To perform a Test Command test:

1. Scroll to the desired test in Test Command menu 7 using the Up and Down buttons.
2. Press the Enter button to select the item. RUN? appears.
3. Press the Enter button to start the test. The unit pauses and then displays IN PROGRESS. When the test is complete, DONE appears.
4. When all desired parameters have been tested, press Enter + Up to end the test.

The Checkout tests can all be performed at the time of installation or at any time during the operation of the system as a test that the system is operable.

⚠ CAUTION

EQUIPMENT DAMAGE HAZARD

Failure to follow this caution may result in equipment damage.

Be sure to allow enough time for compressor start-up and shutdown between checkout tests so that you do not short-cycle the compressors.

TROUBLESHOOTING

For EconomizerONE troubleshooting issues, see Table 28.

Table 28 — Operating Issues and Concerns

SYMPTOM	REASON	SOLUTION
An alarm is displayed on the LCD	Sensor, damper, or the whole working system may not work properly	Check sensor, damper, or the whole working system following the detailed alarm information.
DAC LED is blinking RED	Damper slippage	Check whether the damper works properly.
DAC LED is blinking RED quickly	Damper unplugged	Check whether the damper is connected.
DAC LED is OFF	Terminal ACT-FB is configured but there is no available feedback signal	Check whether the feedback signal is connected; check if ACT-FB is faulty.
Economizer controller has no alarm, but the Free Cooling LED will not turn on when the OA seems to be suitable for Free Cooling	Shutoff SP setting error	Shutoff temperature and/or enthalpy set point is incorrectly set up. Consult an HVAC professional to set up the shutoff set point correctly.
	OA temp is too low	The OA temperature is too low; therefore, there is no cooling demand. This could possibly enable anti-freeze protection.
	OA temp is too high or too humid	In DIFF mode, even though OA temperature is lower than RA temperature, if both OA and RA temperatures exceed the high limit, then Free Cooling turns off. In Differential Enthalpy control mode, even though OA enthalpy is lower than RA enthalpy, if both OA and RA enthalpy exceed the high limit, then Free Cooling turns off.
Economizer controller/mechanical cooling is not operating	No input power	Use a multi-meter to check whether there is 24 vac ± 25% (18-30 vac) at the POWER terminals. If there is no voltage or if the voltage is significantly low, then check the transformer output voltage at the RTU. If 24-v is not present at the transformer secondary side, then check the primary line voltage to the transformer. If the line voltage is not present at the transformer primary side, then check the primary power to the RTU, fuses, circuit breaker, and so on.
	Brownout	If voltage is below 17-v, then the economizer controller may be in Brownout Protection mode. This mode disables all of the relay outputs. When the power is 19 vac or higher, the economizer controller and RTU operate normally.
	Y1/Y2 signal is missing from the thermostat	Mechanical cooling does not run until there is cooling demand (Y1/Y2 Active). Check the wiring from Y1I and Y2I terminals to the commercial thermostat. 24-v should be present between Y1I/Y2I and Y1O/Y2O respectively.
	24 vac~ and 24 vac ⊥ are incorrectly wired	24 vac power supply has polarity when all devices are powered by the same 24 vac transformer; reversing polarity may cause a short circuit that can damage the system. Follow the transformer polarity mark, check the wiring of 24-v~ (or G or 24-v+), and ensure that they are tied to the same polar of 24 vac power supply; while checking the wiring of ⊥ (or G0 or 24-v- or COM), ensure that they are all tied to another polar of 24 vac power supply.
Firmware update failure	Application file is damaged, operation is incorrect, and/or USB flash disk does not work properly	Reload a BIN file, restart the controller, update firmware[a], or change a USB flash disk. Contact service provider if failure still exists.
Free Cooling LED is solid RED	Sensor, damper, or whole working system may not work properly	Check sensor, damper, or the whole working system following the detailed alarm information.
Free Cooling LED is blinking RED	Not economizing when it should	Check the whole economizer working system, such as the sensor, damper, and thermostat.
Incorrect controller password error on mobile application	For CO_2 and single enthalpy (control mode 3) configurations from the factory, the password has changed	For units coming from the factory with CO_2 configuration or single enthalpy (control mode 3), use the controller password OneBT2.1. For all other units, use the controller password OneBT. Performing a factory reset on the controller will also reset the password to OneBT.
RS485 communication failure	RS485 signal or configuration error	Check wiring, configuration, Baud Rate (using mobile application), and other network communication parameters.
Sensor LED is blinking RED	Excess outdoor air	Check the whole economizer working system, such as the sensor, damper, and thermostat.
Sensor LED is solid RED	Mixed Air (MA) sensor error	Check the MA sensor. It must be either a Type II NTC 10K or 0-10 vdc sensor.
	Outside Air (OA)/Return Air (RA) sensor error	Check the wiring and signal of the OA sensor. If in Differential (DIFF) mode, also check the RA sensor. The following sensor signals are valid: Type II NTC 10K or 0-10 vdc temperature. 0-10 vdc or 4-20 mA humidity.
	Air temperature failure/fault	Check the air temperature sensor signal. The valid signal must be Type II NTC 10K or 0-10 vdc.
Sensor LED is OFF	CO_2 sensor error	Check CO_2 sensor connection, sensor signal (under range or over range), and sensor signal type.
Sensor LED is YELLOW	Humidity sensor error	Check humidity sensor connection, sensor signal (under range or over range), and sensor signal type.
Wi-Fi connection failure	Wi-Fi/WLAN stick error or wrong user name and password	Unplug and re-plug in the Wi-Fi/WLAN stick, enter a correct user name and password, restart the controller, or replace the Wi-Fi/WLAN stick. If the Wi-Fi/WLAN stick is POL903.00/100, then the default user name and password are Siemens-WLAN-Stick and SIBPAdmin. DNS name is siemens.wlanstick. Contact Application Engineering for information on this accessory.

NOTE(S):

a. Back up configurations before firmware update. All the previous configuration data is erased after firmware update. Contact Application Engineering for more information on support for firmware.
IMPORTANT: If the controller enters the configuration state for the convenience of I/O configurations, then users can manually switch to the running state after finishing configurations. To do so, press Enter + Up at the same time, then press Enter to confirm the switch after 8RUN STATE appears on the LCD.

PRE-START-UP/START-UP

⚠ WARNING

PERSONAL INJURY HAZARD

Failure to follow this warning could result in personal injury or death.

Follow recognized safety practices and wear approved Personal Protective Equipment (PPE), including safety glasses and gloves when checking or servicing refrigerant system.

Do not use a torch to remove any component. System contains oil and refrigerant under pressure. To remove a component, wear PPE and proceed as follows:

Shut off all electrical power to unit. Apply applicable lockout/tag-out procedures.

Recover refrigerant to relieve all pressure from system using both high-pressure and low pressure ports.

Do not use a torch. Cut component connection tubing with tubing cutter and remove component from unit.

Carefully un-sweat remaining tubing stubs when necessary. Oil can ignite when exposed to torch flame.

Do not operate compressor or provide any electric power to unit unless compressor terminal cover is in place and secured.

Do not remove compressor terminal cover until all electrical power is disconnected and approved lockout/tag-out procedures are in place.

Relieve all pressure from system before touching or disturbing anything inside terminal box whenever refrigerant leak is suspected around compressor terminals.

Never attempt to repair a soldered connection while refrigerant system is under pressure.

⚠ WARNING

ELECTRICAL OPERATION HAZARD

Failure to follow this warning could result in personal injury or death.

The unit must be electrically grounded in accordance with local codes and NEC ANSI/NFPA 70 (American National Standards Institute/National Fire Protection Association).

Proceed as follows to inspect and prepare the unit for initial start-up:

1. Remove all access panels.
2. Read and follow instructions on all WARNING, CAUTION, and INFORMATION labels attached to, or shipped with, unit.
3. Make the following inspections:
   a. Inspect for shipping and handling damages such as broken lines, loose parts, or disconnected wires, etc.
   b. Inspect for oil at all refrigerant tubing connections and on unit base. Detecting oil generally indicates a refrigerant leak. Leak-test all refrigerant tubing connections using electronic leak detector, halide torch, or liquid-soap solution.
   c. Inspect all field-wiring and factory-wiring connections. Be sure that connections are completed and tight. Be sure that wires are not in contact with refrigerant tubing or sharp edges.
   d. Inspect coil fins. If damaged during shipping and handling, carefully straighten fins with a fin comb.
4. Verify the following conditions:
   a. Make sure that condenser-fan blade are correctly positioned in fan orifice. See Condenser Fan Adjustment section for more details.
   b. Make sure that air filter(s) is in place.
   c. Make sure that condensate drain trap is filled with water to ensure proper drainage.
   d. Make sure that all tools and miscellaneous loose parts have been removed.

START-UP, GENERAL

Unit Preparation

Make sure that unit has been installed in accordance with installation instructions and applicable codes.

Additional Installation/Inspection

Inspect the field-installed accessories for proper installation, making note of which ones do or do not require configuration changes. Inspect the SAT sensor for relocation as intended during installation. Inspect special wiring as directed below.

Return-Air Filters

Ensure correct filters are installed in unit (see Appendix B — Physical Data). Do not operate unit without return-air filters.

Outdoor-Air Inlet Screens

Outdoor-air inlet screen must be in place before operating unit.

Compressor Mounting

Compressors are internally spring mounted. Do not loosen or remove compressor hold down bolts.

Internal Wiring

Check all electrical connections in unit control boxes. Tighten as required.

Refrigerant Service Ports

Each unit system has two 1/4 in. SAE flare (with check valves) service ports: one on the suction line, and one on the compressor discharge line. Be sure that caps on the ports are tight.

Compressor Rotation

⚠ CAUTION

EQUIPMENT DAMAGE HAZARD

Failure to follow this caution can result in premature wear and damage to equipment.

Scroll compressors can only compress refrigerant if rotating in the right direction. Reverse rotation for extended times can result in internal damage to the compressor. Scroll compressors are sealed units and cannot be repaired on site location.

On 3-phase units with scroll compressors, it is important to be certain compressor is rotating in the proper direction. To determine whether or not compressor is rotating in the proper direction:

1. Connect service gauges to suction and discharge pressure fittings.
2. Energize the compressor.
3. The suction pressure should drop and the discharge pressure should rise, as is normal on any start-up.

If the suction pressure does not drop and the discharge pressure does not rise to normal levels:

1. Note that the evaporator fan is probably also rotating in the wrong direction.
2. Turn off power to the unit and install lockout tag.
3. Reverse any two of the unit power leads.
4. Re-energize to the compressor. Check pressures.

The suction and discharge pressure levels should now move to their normal start-up levels.

NOTE: When the compressor is rotating in the wrong direction, the unit will make an elevated level of noise and will not provide cooling.

Cooling

Set space thermostat to OFF position. To start unit, turn on main power supply. Set system selector switch at COOL position and fan switch at AUTO. position. Adjust thermostat to a setting below room temperature. Compressor starts on closure of contactor.

Check unit charge. Refer to Refrigerant Charge section on page 15.

Reset thermostat at a position above room temperature. Compressor will shut off. Evaporator fan will shut off after a 30-second delay.

To shut off unit, set system selector switch at OFF position. Resetting thermostat at a position above room temperature shuts unit off temporarily until space temperature exceeds thermostat setting.

Heating

To start unit, turn on main power supply. Set system selector switch to the HEAT position and set thermostat at a setting above room temperature. Set fan to AUTO position.

First stage of thermostat energizes the first stage of the electric heaters. Second stage of thermostat energizes the second stage of electric heaters (if installed). Check heating effects at air supply grille(s).

If electric heaters do not energize, reset limit switch (located on supply-fan scroll) by pressing button located between terminals on the switch.

To shut unit off, set system selector switch to the OFF position. Resetting thermostat at a position below room temperature temporarily shuts unit off until space temperature falls below thermostat setting.

Ventilation (Continuous Fan)

Set fan and system selector switches at ON and OFF positions, respectively. Evaporator fan operates continuously to provide constant air circulation.

FASTENER TORQUE VALUES

Stator motor mounting screws	50 in.-lb (5.7 Nm) ± 5 in.-lb (0.6 Nm)
Fan rotor mounting screws (2.4 HP)	50 in.-lb (5.7 Nm) ± 5 in.-lb (0.6 Nm)
Fan rotor mounting screws (3 and 5 HP)	30 in.-lb (3.4 Nm) ± 2 in.-lb (0.2 Nm)
Fan deck bracket screws	50 in.-lb (5.7 Nm) ± 5 in.-lb (0.6 Nm)
Fan casing screws	10 in.-lb (1.1 Nm) ± 1 in.-lb (0.1 Nm)
Heat shield screws	30 in.-lb (3.4 Nm) ± 2 in.-lb (0.2 Nm)
Condenser motor mounting screws	30 in.-lb (3.4 Nm) ± 2 in.-lb (0.2 Nm)
Condenser hub set screw	84 in.-lb (9.5 Nm) ± 12 in.-lb (1.5 Nm)
Compressor mounting bolts	12 ft-lb (16.2 Nm) ± 2 ft-lb (2.7 Nm)
Tandem rail mounting bolts	8 ft-lb (10.8 Nm) ± 0.5 ft-lb (0.6 Nm)
Crankcase heater	22.5 in.-lb (2.5 Nm) ± 2.5 in.-lb (0.3 Nm)

APPENDIX A — MODEL NUMBER NOMENCLATURE

Position:	1	2	3	4	5	6	7	8	9	10	11	12	13	14	15	16	17
Example:	5	5	9	K	P	0	8	N	0	0	0	A	2	A	0	A	A

Unit Type
559 = Cooling RTU with Optional Electric Heat, Legacy™ Line

Model
K = Puron® (R-410A) Refrigerant with Axion Fan

Voltage
E = 460-3-60
P = 208/230-3-60
T = 575-3-60

Cooling Tons
08 = 7.5 tons
09 = 8.5 tons
12 = 10 tons
14 = 12.5 tons
16 = 15 tons

Refrig. System Options
N = Two-Stage Cooling Models/Single Circuit
R = Two-Stage Cooling Models/Single Circuit with Perfect Humidity™ Dehumidification System

Heat Level
(Field-installed electric heaters available)
000 = No Heat

Coil Options (RTPF) (Outdoor – Indoor – Hail Guard)
A = Al/Cu – Al/Cu
B = Pre-coat Al/Cu – Al/Cu
C = E-coat Al/Cu – Al/Cu
D = E-coat Al/Cu – E-coat Al/Cu
E = Cu/Cu – Al/Cu
F = Cu/Cu – Cu/Cu
M = Al/Cu – Al/Cu – Louvered Hail Guard
N = Pre-coat Al/Cu – Al/Cu – Louvered Hail Guard
P = E-coat Al/Cu – Al/Cu – Louvered Hail Guard
Q = E-coat Al/Cu – E-coat Al/Cu – Louvered Hail Guard
R = Cu/Cu – Al/Cu – Louvered Hail Guard
S = Cu/Cu – Cu/Cu – Louvered Hail Guard

Axion Fan — Van Axial — Indoor Fan Options / Filter Switch Options
2 = Direct Drive — Axion Fan — Standard/Medium Static Option
3 = Direct Drive — Axion Fan — High Static Option
5 = Direct Drive — Axion Fan — Standard/Medium Static Option and Filter Status Switch
6 = Direct Drive — Axion Fan — High Static Option and Filter Status Switch

Outdoor Air Options
A = Electromechanical controls. Allows for use of all field-installed economizers and dampers.
B = Temperature Economizer, Barometric Relief, Low Leak
E = Temperature Economizer, Barometric Relief, Low Leak with CO_2
H = Enthalpy Economizer, Barometric Relief, Low Leak
L = Enthalpy Economizer, Barometric Relief, Low Leak with CO_2
U = Temperature Economizer, Barometric Relief, Ultra Low Leak
W = Enthalpy Economizer, Barometric Relief, Ultra Low Leak

Factory Installed Options
0A = None
Note: See the 559K 7.5 to 15 ton Price Pages for a complete list of factory installed options.

Packaging and Control
A = Standard Packaging, electromechanical controls, no intake or exhaust option. Will allow for use of all field-installed economizers, manual or two-position damper.
B = LTL Packaging, electromechanical controls, no intake or exhaust option. Will allow for use of all field-installed economizers, manual or two-position damper.
G = Standard Packaging, electromechanical controls that require POL224 EconomizerONE.
H = LTL Packaging, electromechanical controls that require POL224 EconomizerONE.

Fig. A — Model Number Nomenclature

559K 7.5 to 8.5 Ton Physical Data

UNIT	559K*08N	559K*08R	559K*09N	559K*09R
NOMINAL TONS	7.5	7.5	8.5	8.5
BASE UNIT OPERATING WT (lb)[a]	787	787	868	868
REFRIGERATION SYSTEM				
No. Circuits / No. Compressors / Type	1 / 2 / Scroll	1 / 2 / Scroll	1 / 2 / Scroll	1 / 2 / Scroll
Puron® (R-410A) Charge (lb-oz)	13-3	—	14-0	—
Perfect Humidity™ Puron (R-410A) Charge (lb-oz)	—	19-5	—	21-0
Metering Device	TXV	TXV	TXV	TXV
Perfect Humidity Metering Device	—	TXV	—	TXV
High-Pressure Trip/Reset (psig)	630 / 505	630 / 505	630 / 505	630 / 505
Low-Pressure Trip/Reset (psig)	54 / 117	54 / 117	54 / 117	54 / 117
EVAPORATOR COIL				
Material (Tube / Fin)	Cu / Al	Cu / Al	Cu / Al	Cu / Al
Coil Type (RTPF)	3/8 in.	3/8 in.	3/8 in.	3/8 in.
Rows / FPI	3 / 15	3 / 15	4 / 15	4 / 15
Total Face Area (ft^2)	8.9	8.9	8.9	8.9
Condensate Drain Connection Size	3/4 in.	3/4 in.	3/4 in.	3/4 in.
CONDENSER COIL				
Material (Tube / Fin)	Cu / Al	Cu / Al	Cu / Al	Cu / Al
Coil Type (RTPF)	5/16 in.	5/16 in.	5/16 in.	5/16 in.
Rows / FPI	2 / 18	2 / 18	2 / 18	2 / 18
Total Face Area (ft^2)	20.5	20.5	21.4	21.4
PERFECT HUMIDITY COIL				
Material (Tube / Fin)	—	Cu / Al	—	Cu / Al
Coil Type (RTPF)	—	5/16 in.	—	5/16 in.
Rows / FPI	—	2 / 18	—	2 / 18
Total Face Area (ft^2)	—	6.0	—	8.0
EVAPORATOR FAN AND MOTOR				
Standard/Medium Static				
Motor Qty / Drive Type	1 / Direct	1 / Direct	1 / Direct	1 / Direct
Max Continuous bhp	2.4	2.4	2.4	2.4
Range (rpm)	250-2000	250-2000	250-2000	250-2000
Fan Qty / Type	1 / Vane Axial	1 / Vane Axial	1 / Vane Axial	1 / Vane Axial
Fan Diameter (in.)	22	22	22	22
High Static				
Motor Qty / Drive Type	1 / Direct	1 / Direct	1 / Direct	1 / Direct
Max Continuous bhp	3	3	3	3
Range (rpm)	250-2200	250-2200	250-2200	250-2200
Fan Qty / Type	1 / Vane Axial	1 / Vane Axial	1 / Vane Axial	1 / Vane Axial
Fan Diameter (in.)	22	22	22	22
CONDENSER FAN AND MOTOR				
Qty / Motor Drive Type	2 / Direct	2 / Direct	2 / Direct	2 / Direct
Motor hp / rpm	1/4 / 1100	1/4 / 1100	1/4 / 1100	1/4 / 1100
Fan Diameter (in.)	22	22	22	22
FILTERS				
RA Filter Qty / Size (in.)	4 / 16x20x2	4 / 16x20x2	4 / 16x20x2	4 / 16x20x2
OA Inlet Screen Qty / Size (in.)	1 / 20x24x1	1 / 20x24x1	1 / 20x24x1	1 / 20x24x1

NOTE(S):

a. Base unit operating weight does not include weight of options.

LEGEND

bhp — Brake Horsepower
FPI — Fins Per Inch
OA — Outdoor Air
RA — Return Air

559K 10 to 12.5 Ton Physical Data

UNIT	559K*12N	559K*12R	559K*14N	559K*14R
NOMINAL TONS	10	10	12.5	12.5
BASE UNIT OPERATING WT (lb)[a]	878	878	1041	1041
REFRIGERATION SYSTEM				
No. Circuits / No. Compressors / Type	1 / 2 / Scroll	1 / 2 / Scroll	1 / 2 / Scroll	1 / 2 / Scroll
Puron® (R-410A) Charge (lb-oz)	15-3	—	19-8	—
Perfect Humidity™ Puron (R-410A) Charge (lb-oz)	—	23-3	—	28-6
Metering Device	TXV	TXV	TXV	TXV
Perfect Humidity Metering Device	—	TXV	—	TXV
High-Pressure Trip/Reset (psig)	630 / 505	630 / 505	630 / 505	630 / 505
Low-Pressure Trip/Reset (psig)	54 / 117	54 / 117	54 / 117	54 / 117
EVAPORATOR COIL				
Material (Tube / Fin)	Cu / Al	Cu / Al	Cu / Al	Cu / Al
Coil Type (RTPF)	3/8 in.	3/8 in.	3/8 in.	3/8 in.
Rows / FPI	4 / 15	4 / 15	4 / 15	4 / 15
Total Face Area (ft^2)	11.1	11.1	11.1	11.1
Condensate Drain Connection Size	3/4 in.	3/4 in.	3/4 in.	3/4 in.
CONDENSER COIL				
Material (Tube / Fin)	Cu / Al	Cu / Al	Cu / Al	Cu / Al
Coil Type (RTPF)	5/16 in.	5/16 in.	5/16 in.	5/16 in.
Rows / FPI	2 / 18	2 / 18	3 / 18	3 / 18
Total Face Area (ft^2)	25.1	25.1	25.1	25.1
PERFECT HUMIDITY COIL				
Material (Tube / Fin)	—	Cu / Al	—	Cu / Al
Coil Type (RTPF)	—	5/16 in.	—	5/16 in.
Rows / FPI	—	2 / 18	—	2 / 18
Total Face Area (ft^2)	—	8.0	—	8.0
EVAPORATOR FAN AND MOTOR				
Standard/Medium Static				
Motor Qty / Drive Type	1 / Direct	1 / Direct	1 / Direct	1 / Direct
Max Continuous bhp	2.4	2.4	3	3
Range (rpm)	250-2000	250-2000	250-2200	250-2200
Fan Qty / Type	1 / Vane Axial	1 / Vane Axial	1 / Vane Axial	1 / Vane Axial
Fan Diameter (in.)	22	22	22	22
High Static				
Motor Qty / Drive Type	1 / Direct	1 / Direct	1 / Direct	1 / Direct
Max Continuous bhp	5	5	5	5
Range (rpm)	250-2200	250-2200	250-2200	250-2200
Fan Qty / Type	1 / Vane Axial	1 / Vane Axial	1 / Vane Axial	1 / Vane Axial
Fan Diameter (in.)	22	22	22	22
CONDENSER FAN AND MOTOR				
Qty / Motor Drive Type	2 / Direct	2 / Direct	1 / Direct	1 / Direct
Motor hp / rpm	1/4 / 1100	1/4 / Multiple Speeds	1 / Multiple Speeds	1 / Multiple Speeds
Fan Diameter (in.)	22	22	30	30
FILTERS				
RA Filter Qty / Size (in.)	4 / 20x20x2	4 / 20x20x2	4 / 20x20x2	4 / 20x20x2
OA Inlet Screen Qty / Size (in.)	1 / 20x24x1	1 / 20x24x1	1 / 20x24x1	1 / 20x24x1

NOTE(S):

a. Base unit operating weight does not include weight of options.

LEGEND

bhp — Brake Horsepower
FPI — Fins Per Inch
OA — Outdoor Air
RA — Return Air

559K 15 Ton Physical Data

UNIT	559K*16N	559K*16R
NOMINAL TONS	15	15
BASE UNIT OPERATING WT (lb)[a]	1325	1325
REFRIGERATION SYSTEM		
No. Circuits / No. Compressors / Type	1 / 2 / Scroll	1 / 2 / Scroll
Puron® (R-410A) Charge (lb-oz)	24-0	34-0
Perfect Humidity™ Puron (R-410A) Charge (lb-oz)	—	34-0
Metering Device	TXV	TXV
Perfect Humidity Metering Device	—	—
High-Pressure Trip/Reset (psig)	630 / 505	630 / 505
Low-Pressure Trip/Reset (psig)	54 / 117	54 / 117
EVAPORATOR COIL		
Material (Tube / Fin)	Cu / Al	Cu / Al
Coil Type (RTPF)	3/8 in.	3/8 in.
Rows / FPI	3 / 15	3 / 15
Total Face Area (ft²)	17.5	17.5
Condensate Drain Connection Size	3/4 in.	3/4 in.
CONDENSER COIL		
Material (Tube / Fin)	Cu / Al	Cu / Al
Coil Type (RTPF)	5/16 in.	5/16 in.
Rows / FPI	2 / 18	2 / 18
Total Face Area (ft²)	46.2	46.2
PERFECT HUMIDITY COIL		
Material (Tube / Fin)	—	Cu / Al
Coil Type (RTPF)	—	5/16 in.
Rows / FPI	—	2 / 18
Total Face Area (ft²)	—	8.0
EVAPORATOR FAN AND MOTOR		
Standard/Medium Static		
Motor Qty / Drive Type	1 / Direct	1 / Direct
Max Continuous bhp	3	3
Range (rpm)	250-2000	250-2000
Fan Qty / Type	1 / Vane Axial	1 / Vane Axial
Fan Diameter (in.)	22	22
High Static		
Motor Qty / Drive Type	1 / Direct	1 / Direct
Max Continuous bhp	5	5
Range (rpm)	250-2000	250-2000
Fan Qty / Type	1 / Vane Axial	1 / Vane Axial
Fan Diameter (in.)	22	22
CONDENSER FAN AND MOTOR		
Qty / Motor Drive Type	3 / Direct	3 / Direct
Motor hp / rpm	1/4 / 1100	1/4 / 1100
Fan Diameter (in.)	22	22
FILTERS		
RA Filter Qty / Size (in.)	6 / 18x24x2	6 / 18x24x2
OA Inlet Screen Qty / Size (in.)	Vertical: 2 / 24x27x1 Horizontal: 1 / 30x39x1	Vertical: 2 / 24x27x1 Horizontal: 1 / 30x39x1

NOTE(S):

a. Base unit operating weight does not include weight of options.

LEGEND

bhp — Brake Horsepower
FPI — Fins Per Inch
OA — Outdoor Air
RA — Return Air

GENERAL FAN PERFORMANCE NOTES

1. Interpolation is permissible. Do not extrapolate.
2. External static pressure is the static pressure difference between the return duct and the supply duct plus the static pressure caused by any FIOPs or accessories.
3. Tabular data accounts for pressure loss due to clean filters, unit casing, high gas heat (on gas heat models) and wet coils.
4. Factory options and accessories may effect static pressure losses. Selection software is available, through your salesperson, to help you select the best motor/drive combination for your application.
5. The Fan Performance tables offer motor/drive recommendations. In cases when two motor/drive combinations would work, the lower horsepower option is recommended.
6. The EPACT (Energy Policy Act of 1992) regulates energy requirements for specific types of indoor fan motors. Motors regulated by EPACT include any general purpose, T-frame (three-digit, 143 and larger), single-speed, foot mounted, polyphase, squirrel cage induction motors of NEMA (National Electrical Manufacturers Association) design A and B, manufactured for use in the United States. Ranging from 1 to 200 Hp, these continuous-duty motors operate on 230 and 460 volt, 60 Hz power. If a motor does not fit into these specifications, the motor does not have to be replaced by an EPACT compliant energy-efficient motor. Variable-speed motors are exempt from EPACT compliance requirements.

559K*08 — 7.5 Ton Vertical Supply (rpm - bhp)

CFM	AVAILABLE EXTERNAL STATIC PRESSURE (in. wg)									
	0.2		0.4		0.6		0.8		1.0	
	rpm	bhp	rpm	bhp	rpm	bhp	rpm	bhp	rpm	bhp
2250	970	0.34	1102	0.50	1216	0.68	1319	0.86	1414	1.07
2440	1031	0.41	1157	0.58	1267	0.76	1367	0.96	1459	1.17
2625	1092	0.49	1213	0.67	1320	0.86	1416	1.06	1506	1.28
2810	1155	0.57	1271	0.76	1374	0.96	1467	1.17	1554	1.39
3000	1219	0.66	1330	0.86	1429	1.07	1520	1.29	1605	1.52
3190	1284	0.77	1390	0.97	1486	1.19	1574	1.41	1656	1.64
3375	1349	0.87	1451	1.09	1544	1.31	1629	1.54	1709	1.78
3560	1415	0.99	1513	1.21	1603	1.44	1686	1.68	1764	1.92
3750	1481	1.11	1576	1.34	1662	1.57	1743	1.81	1819	2.06

CFM	AVAILABLE EXTERNAL STATIC PRESSURE (in. wg)									
	1.2		1.4		1.6		1.8		2.0	
	rpm	bhp	rpm	bhp	rpm	bhp	rpm	bhp	rpm	bhp
2250	1502	1.28	1585	1.50	1664	1.74	1739	1.98	1810	2.23
2440	1545	1.38	1626	1.61	1703	1.85	1777	2.11	1847	2.37
2625	1589	1.50	1669	1.74	1745	1.98	1817	2.24	1886	2.51
2810	1636	1.62	1713	1.86	1788	2.12	1858	2.38	1926	2.65
3000	1684	1.75	1760	2.00	1832	2.26	1901	2.52	1968	2.80
3190	1734	1.89	1808	2.14	1878	2.40	1946	2.67	2012	2.95
3375	1785	2.03	1857	2.28	1926	2.55	1992	2.82	2057	3.10
3560	1837	2.17	1908	2.43	1975	2.69	2040	2.97	—	—
3750	1891	2.31	1960	2.57	2026	2.84	2089	3.11	—	—

Std/Med Static 970-2000 rpm, 2.4 Max bhp

High Static 970-2200 rpm, 3.0 Max bhp

559K*08 – Standard/Medium Static — 7.5 Ton Vertical Supply (rpm - vdc)

CFM	AVAILABLE EXTERNAL STATIC PRESSURE (in. wg)									
	0.2		0.4		0.6		0.8		1.0	
	rpm	vdc	rpm	vdc	rpm	vdc	rpm	vdc	rpm	vdc
2250	970	4.7	1102	5.4	1216	6.0	1319	6.5	1414	7.0
2440	1031	5.0	1157	5.7	1267	6.2	1367	6.7	1459	7.2
2625	1092	5.3	1213	6.0	1320	6.5	1416	7.0	1506	7.5
2810	1155	5.7	1271	6.3	1374	6.8	1467	7.3	1554	7.7
3000	1219	6.0	1330	6.6	1429	7.1	1520	7.5	1605	8.0
3190	1284	6.3	1390	6.9	1486	7.4	1574	7.8	1656	8.2
3375	1349	6.7	1451	7.2	1544	7.7	1629	8.1	1709	8.5
3560	1415	7.0	1513	7.5	1603	8.0	1686	8.4	1764	8.8
3750	1481	7.3	1576	7.8	1662	8.3	1743	8.7	1819	9.1

CFM	AVAILABLE EXTERNAL STATIC PRESSURE (in. wg)									
	1.2		1.4		1.6		1.8		2.0	
	rpm	vdc	rpm	vdc	rpm	vdc	rpm	vdc	rpm	vdc
2250	1502	7.4	1585	7.9	1664	8.3	1739	8.7	1810	9.0
2440	1545	7.7	1626	8.1	1703	8.5	1777	8.9	1847	9.2
2625	1589	7.9	1669	8.3	1745	8.7	1817	9.1	—	—
2810	1636	8.1	1713	8.5	1788	8.9	1858	9.3	—	—
3000	1684	8.4	1760	8.8	1832	9.1	—	—	—	—
3190	1734	8.6	1808	9.0	1878	9.4	—	—	—	—
3375	1785	8.9	1857	9.3	—	—	—	—	—	—
3560	1837	9.2	—	—	—	—	—	—	—	—
3750	1891	9.4	—	—	—	—	—	—	—	—

Std/Med Static 970-2000 rpm

559K*08 – High Static — 7.5 Ton Vertical Supply (rpm - vdc)

CFM	AVAILABLE EXTERNAL STATIC PRESSURE (in. wg)									
	0.2		0.4		0.6		0.8		1.0	
	rpm	vdc	rpm	vdc	rpm	vdc	rpm	vdc	rpm	vdc
2250	970	4.3	1102	4.9	1216	5.5	1319	5.9	1414	6.4
2440	1031	4.6	1157	5.2	1267	5.7	1367	6.2	1459	6.6
2625	1092	4.9	1213	5.4	1320	5.9	1416	6.4	1506	6.8
2810	1155	5.2	1271	5.7	1374	6.2	1467	6.6	1554	7.0
3000	1219	5.5	1330	6.0	1429	6.4	1520	6.9	1605	7.3
3190	1284	5.8	1390	6.3	1486	6.7	1574	7.1	1656	7.5
3375	1349	6.1	1451	6.5	1544	7.0	1629	7.4	1709	7.7
3560	1415	6.4	1513	6.8	1603	7.2	1686	7.6	1764	8.0
3750	1481	6.7	1576	7.1	1662	7.5	1743	7.9	1819	8.2

CFM	AVAILABLE EXTERNAL STATIC PRESSURE (in. wg)									
	1.2		1.4		1.6		1.8		2.0	
	rpm	vdc	rpm	vdc	rpm	vdc	rpm	vdc	rpm	vdc
2250	1502	6.8	1585	7.2	1664	7.5	1739	7.9	1810	8.2
2440	1545	7.0	1626	7.4	1703	7.7	1777	8.0	1847	8.4
2625	1589	7.2	1669	7.5	1745	7.9	1817	8.2	1886	8.6
2810	1636	7.4	1713	7.8	1788	8.1	1858	8.4	1926	8.7
3000	1684	7.6	1760	8.0	1832	8.3	1901	8.6	1968	8.9
3190	1734	7.8	1808	8.2	1878	8.5	1946	8.8	2012	9.1
3375	1785	8.1	1857	8.4	1926	8.7	1992	9.0	2057	9.3
3560	1837	8.3	1908	8.7	1975	9.0	2040	9.3	—	—
3750	1891	8.6	1960	8.9	2026	9.2	2089	9.5	—	—

High Static 970-2200 rpm

559K*09 — 8.5 Ton Vertical Supply (rpm - bhp)

CFM	AVAILABLE EXTERNAL STATIC PRESSURE (in. wg)									
	0.2		0.4		0.6		0.8		1.0	
	rpm	bhp	rpm	bhp	rpm	bhp	rpm	bhp	rpm	bhp
2550	1015	0.39	1128	0.53	1233	0.69	1330	0.87	1421	1.06
2760	1084	0.47	1190	0.62	1289	0.78	1382	0.96	1470	1.16
2975	1154	0.56	1253	0.71	1348	0.89	1437	1.07	1521	1.27
3190	1225	0.66	1319	0.82	1408	1.00	1493	1.19	1574	1.39
3400	1297	0.77	1386	0.94	1470	1.12	1551	1.31	1629	1.52
3610	1370	0.89	1453	1.06	1534	1.25	1612	1.45	1687	1.66
3825	1443	1.02	1522	1.19	1599	1.38	1673	1.58	1745	1.80
4040	1517	1.15	1592	1.33	1665	1.52	1736	1.73	1806	1.94
4250	1591	1.29	1663	1.47	1733	1.67	1801	1.87	1867	2.09

CFM	AVAILABLE EXTERNAL STATIC PRESSURE (in. wg)									
	1.2		1.4		1.6		1.8		2.0	
	rpm	bhp	rpm	bhp	rpm	bhp	rpm	bhp	rpm	bhp
2550	1506	1.26	1586	1.47	1662	1.69	1734	1.92	1802	2.16
2760	1552	1.37	1630	1.58	1705	1.81	1776	2.05	1843	2.29
2975	1601	1.48	1677	1.70	1750	1.94	1819	2.17	1886	2.42
3190	1652	1.61	1726	1.84	1796	2.07	1864	2.31	1930	2.57
3400	1704	1.74	1776	1.97	1845	2.21	1911	2.45	1975	2.71
3610	1759	1.88	1828	2.11	1895	2.35	1960	2.60	2023	2.86
3825	1815	2.02	1882	2.25	1947	2.50	2011	2.75	2072	3.01
4040	1873	2.17	1938	2.40	2001	2.64	2063	2.90	2122	3.15
4250	1932	2.31	1995	2.54	2056	2.78	2116	3.04	—	—

Std/Med Static 1015-2000 rpm, 2.4 Max bhp

High Static 1015-2200 rpm, 3.0 Max bhp

559K*09 – Standard/Medium Static — 8.5 Ton Vertical Supply (rpm - vdc)

CFM	AVAILABLE EXTERNAL STATIC PRESSURE (in. wg)									
	0.2		0.4		0.6		0.8		1.0	
	rpm	vdc	rpm	vdc	rpm	vdc	rpm	vdc	rpm	vdc
2550	1015	4.9	1128	5.5	1233	6.1	1330	6.6	1421	7.0
2760	1084	5.3	1190	5.8	1289	6.3	1382	6.8	1470	7.3
2975	1154	5.6	1253	6.2	1348	6.6	1437	7.1	1521	7.5
3190	1225	6.0	1319	6.5	1408	7.0	1493	7.4	1574	7.8
3400	1297	6.4	1386	6.8	1470	7.3	1551	7.7	1629	8.1
3610	1370	6.8	1453	7.2	1534	7.6	1612	8.0	1687	8.4
3825	1443	7.1	1522	7.5	1599	7.9	1673	8.3	1745	8.7
4040	1517	7.5	1592	7.9	1665	8.3	1736	8.6	1806	9.0
4250	1591	7.9	1663	8.3	1733	8.6	1801	9.0	1867	9.3

CFM	AVAILABLE EXTERNAL STATIC PRESSURE (in. wg)									
	1.2		1.4		1.6		1.8		2.0	
	rpm	vdc	rpm	vdc	rpm	vdc	rpm	vdc	rpm	vdc
2550	1506	7.5	1586	7.9	1662	8.3	1734	8.6	1802	9.0
2760	1552	7.7	1630	8.1	1705	8.5	1776	8.8	1843	9.2
2975	1601	7.9	1677	8.3	1750	8.7	1819	9.1	—	—
3190	1652	8.2	1726	8.6	1796	9.0	—	—	—	—
3400	1704	8.5	1776	8.8	1845	9.2	—	—	—	—
3610	1759	8.8	1828	9.1	1895	9.5	—	—	—	—
3825	1815	9.0	1882	9.4	—	—	—	—	—	—
4040	1873	9.3	—	—	—	—	—	—	—	—
4250	1932	9.7	—	—	—	—	—	—	—	—

Std/Med Static 1015-2000 rpm

559K*09 – High Static — 8.5 Ton Vertical Supply (rpm - vdc)

CFM	AVAILABLE EXTERNAL STATIC PRESSURE (in. wg)									
	0.2		0.4		0.6		0.8		1.0	
	rpm	vdc	rpm	vdc	rpm	vdc	rpm	vdc	rpm	vdc
2550	1015	4.5	1128	5.1	1233	5.5	1330	6.0	1421	6.4
2760	1084	4.8	1190	5.3	1289	5.8	1382	6.2	1470	6.6
2975	1154	5.2	1253	5.6	1348	6.1	1437	6.5	1521	6.9
3190	1225	5.5	1319	5.9	1408	6.3	1493	6.7	1574	7.1
3400	1297	5.8	1386	6.2	1470	6.6	1551	7.0	1629	7.4
3610	1370	6.2	1453	6.6	1534	6.9	1612	7.3	1687	7.6
3825	1443	6.5	1522	6.9	1599	7.2	1673	7.6	1745	7.9
4040	1517	6.8	1592	7.2	1665	7.5	1736	7.9	1806	8.2
4250	1591	7.2	1663	7.5	1733	7.8	1801	8.2	1867	8.5

CFM	AVAILABLE EXTERNAL STATIC PRESSURE (in. wg)									
	1.2		1.4		1.6		1.8		2.0	
	rpm	vdc	rpm	vdc	rpm	vdc	rpm	vdc	rpm	vdc
2550	1506	6.8	1586	7.2	1662	7.5	1734	7.8	1802	8.2
2760	1552	7.0	1630	7.4	1705	7.7	1776	8.0	1843	8.4
2975	1601	7.2	1677	7.6	1750	7.9	1819	8.2	1886	8.6
3190	1652	7.5	1726	7.8	1796	8.1	1864	8.4	1930	8.8
3400	1704	7.7	1776	8.0	1845	8.4	1911	8.7	1975	9.0
3610	1759	8.0	1828	8.3	1895	8.6	1960	8.9	2023	9.2
3825	1815	8.2	1882	8.5	1947	8.8	2011	9.1	2072	9.4
4040	1873	8.5	1938	8.8	2001	9.1	2063	9.4	2122	9.6
4250	1932	8.8	1995	9.1	2056	9.3	2116	9.6	—	—

High Static 1015-2200 rpm

559K*12 — 10 Ton Vertical Supply (rpm - bhp)

CFM	AVAILABLE EXTERNAL STATIC PRESSURE (in. wg)									
	0.2		0.4		0.6		0.8		1.0	
	rpm	bhp	rpm	bhp	rpm	bhp	rpm	bhp	rpm	bhp
3000	1181	0.60	1279	0.77	1372	0.95	1461	1.14	1544	1.35
3250	1264	0.73	1356	0.91	1443	1.09	1527	1.29	1607	1.51
3500	1348	0.88	1434	1.06	1517	1.25	1596	1.46	1673	1.68
3750	1433	1.04	1514	1.23	1592	1.43	1667	1.64	1740	1.86
4000	1518	1.21	1595	1.41	1669	1.61	1740	1.83	1810	2.06
4250	1605	1.41	1677	1.60	1747	1.81	1815	2.03	1882	2.27
4500	1691	1.60	1760	1.81	1826	2.02	1892	2.24	1955	2.48
4750	1778	1.81	1843	2.01	1907	2.23	1969	2.46	2030	2.69
5000	1866	2.02	1928	2.23	1988	2.44	2048	2.67	2106	2.91

CFM	AVAILABLE EXTERNAL STATIC PRESSURE (in. wg)									
	1.2		1.4		1.6		1.8		2.0	
	rpm	bhp	rpm	bhp	rpm	bhp	rpm	bhp	rpm	bhp
3000	1624	1.57	1699	1.80	1771	2.04	1840	2.29	1906	2.54
3250	1684	1.73	1757	1.97	1827	2.21	1894	2.47	1958	2.72
3500	1746	1.91	1817	2.15	1884	2.40	1950	2.66	2013	2.92
3750	1811	2.10	1879	2.34	1945	2.60	2008	2.86	2070	3.13
4000	1878	2.30	1943	2.55	2007	2.81	2069	3.08	2128	3.35
4250	1947	2.51	2010	2.76	2071	3.02	2131	3.29	2189	3.56
4500	2017	2.72	2078	2.97	2138	3.24	2195	3.50	—	—
4750	2090	2.94	2148	3.19	—	—	—	—	—	—
5000	2164	3.15	—	—	—	—	—	—	—	—

Std/Med Static 1181-2000 rpm, 2.4 Max bhp

High Static 1181-2200 rpm, 5.0 Max bhp

559K*12 – Standard/Medium Static — 10 Ton Vertical Supply (rpm - vdc)

CFM	AVAILABLE EXTERNAL STATIC PRESSURE (in. wg)									
	0.2		0.4		0.6		0.8		1.0	
	rpm	vdc	rpm	vdc	rpm	vdc	rpm	vdc	rpm	vdc
3000	1181	5.8	1279	6.3	1372	6.8	1461	7.2	1544	7.7
3250	1264	6.2	1356	6.7	1443	7.1	1527	7.6	1607	8.0
3500	1348	6.6	1434	7.1	1517	7.5	1596	7.9	1673	8.3
3750	1433	7.1	1514	7.5	1592	7.9	1667	8.3	1740	8.7
4000	1518	7.5	1595	7.9	1669	8.3	1740	8.7	1810	9.0
4250	1605	8.0	1677	8.3	1747	8.7	1815	9.0	1882	9.4
4500	1691	8.4	1760	8.8	1826	9.1	1892	9.4	—	—
4750	1778	8.9	1843	9.2	1907	9.5	—	—	—	—
5000	1866	9.3	1928	9.6	1988	9.9	—	—	—	—

CFM	AVAILABLE EXTERNAL STATIC PRESSURE (in. wg)									
	1.2		1.4		1.6		1.8		2.0	
	rpm	vdc	rpm	vdc	rpm	vdc	rpm	vdc	rpm	vdc
3000	1624	8.1	1699	8.5	1771	8.8	1840	9.2	—	—
3250	1684	8.4	1757	8.8	1827	9.1	—	—	—	—
3500	1746	8.7	1817	9.1	1884	9.4	—	—	—	—
3750	1811	9.0	1879	9.4	—	—	—	—	—	—
4000	1878	9.4	—	—	—	—	—	—	—	—
4250	—	—	—	—	—	—	—	—	—	—
4500	—	—	—	—	—	—	—	—	—	—
4750	—	—	—	—	—	—	—	—	—	—
5000	—	—	—	—	—	—	—	—	—	—

Std/Med Static 1181-2000 rpm

559K*12 – High Static — 10 Ton Vertical Supply (rpm - vdc)

CFM	AVAILABLE EXTERNAL STATIC PRESSURE (in. wg)									
	0.2		0.4		0.6		0.8		1.0	
	rpm	vdc	rpm	vdc	rpm	vdc	rpm	vdc	rpm	vdc
3000	1181	5.3	1279	5.7	1372	6.2	1461	6.6	1544	7.0
3250	1264	5.7	1356	6.1	1443	6.5	1527	6.9	1607	7.3
3500	1348	6.1	1434	6.5	1517	6.8	1596	7.2	1673	7.6
3750	1433	6.5	1514	6.8	1592	7.2	1667	7.5	1740	7.9
4000	1518	6.9	1595	7.2	1669	7.5	1740	7.9	1810	8.2
4250	1605	7.3	1677	7.6	1747	7.9	1815	8.2	1882	8.5
4500	1691	7.7	1760	8.0	1826	8.3	1892	8.6	1955	8.9
4750	1778	8.1	1843	8.4	1907	8.6	1969	8.9	2030	9.2
5000	1866	8.5	1928	8.7	1988	9.0	2048	9.3	2106	9.6

CFM	AVAILABLE EXTERNAL STATIC PRESSURE (in. wg)									
	1.2		1.4		1.6		1.8		2.0	
	rpm	vdc	rpm	vdc	rpm	vdc	rpm	vdc	rpm	vdc
3000	1624	7.3	1699	7.7	1771	8.0	1840	8.3	1906	8.6
3250	1684	7.6	1757	8.0	1827	8.3	1894	8.6	1958	8.9
3500	1746	7.9	1817	8.2	1884	8.5	1950	8.8	2013	9.1
3750	1811	8.2	1879	8.5	1945	8.8	2008	9.1	2070	9.4
4000	1878	8.5	1943	8.8	2007	9.1	2069	9.4	2128	9.7
4250	1947	8.8	2010	9.1	2071	9.4	2131	9.7	2189	9.9
4500	2017	9.2	2078	9.4	2138	9.7	2195	10.0	—	—
4750	2090	9.5	2148	9.8	—	—	—	—	—	—
5000	2164	9.8	—	—	—	—	—	—	—	—

High Static 1181-2200 rpm

559K*14 — 12.5 Ton Vertical Supply (rpm - bhp)

CFM	AVAILABLE EXTERNAL STATIC PRESSURE (in. wg)									
	0.2		0.4		0.6		0.8		1.0	
	rpm	bhp	rpm	bhp	rpm	bhp	rpm	bhp	rpm	bhp
3750	1178	0.86	1287	1.12	1386	1.40	1475	1.69	1558	1.99
4060	1260	1.05	1362	1.32	1456	1.62	1543	1.92	1623	2.24
4375	1343	1.26	1438	1.55	1528	1.86	1612	2.19	1690	2.52
4690	1426	1.51	1516	1.81	1602	2.14	1683	2.48	1759	2.83
5000	1511	1.78	1595	2.09	1677	2.43	1755	2.79	1828	3.15
5310	1596	2.08	1675	2.41	1753	2.76	1828	3.13	1899	3.51
5625	1681	2.41	1756	2.74	1830	3.10	1902	3.49	1971	3.88
5940	1767	2.76	1838	3.10	1909	3.48	1978	3.87	2045	4.28
6250	1854	3.14	1921	3.49	1989	3.88	2055	4.27	2119	4.69

CFM	AVAILABLE EXTERNAL STATIC PRESSURE (in. wg)									
	1.2		1.4		1.6		1.8		2.0	
	rpm	bhp	rpm	bhp	rpm	bhp	rpm	bhp	rpm	bhp
3750	1634	2.29	1705	2.61	1772	2.93	1837	3.26	1898	3.60
4060	1698	2.57	1768	2.90	1834	3.23	1897	3.58	1957	3.93
4375	1763	2.86	1832	3.21	1897	3.56	1959	3.92	2018	4.29
4690	1830	3.18	1897	3.55	1961	3.92	2022	4.29	2081	4.68
5000	1898	3.53	1964	3.91	2027	4.30	2087	4.69	2144	5.09
5310	1967	3.90	2031	4.29	2093	4.69	2152	5.10	—	—
5625	2037	4.28	2100	4.69	2161	5.11	—	—	—	—
5940	2109	4.69	2170	5.11	—	—	—	—	—	—
6250	2181	5.11	—	—	—	—	—	—	—	—

Std/Med Static 1178-2200 rpm, 3.0 Max bhp

High Static 1178-2200 rpm, 5.0 Max bhp

559K*14 – Standard/Medium Static — 12.5 Ton Vertical Supply (rpm - vdc)

CFM	AVAILABLE EXTERNAL STATIC PRESSURE (in. wg)									
	0.2		0.4		0.6		0.8		1.0	
	rpm	vdc	rpm	vdc	rpm	vdc	rpm	vdc	rpm	vdc
3750	1178	5.3	1287	5.8	1386	6.2	1475	6.7	1558	7.0
4060	1260	5.7	1362	6.1	1456	6.6	1543	7.0	1623	7.3
4375	1343	6.0	1438	6.5	1528	6.9	1612	7.3	1690	7.6
4690	1426	6.4	1516	6.8	1602	7.2	1683	7.6	1759	8.0
5000	1511	6.8	1595	7.2	1677	7.6	1755	7.9	—	—
5310	1596	7.2	1675	7.6	1753	7.9	—	—	—	—
5625	1681	7.6	1756	8.0	—	—	—	—	—	—
5940	1767	8.0	—	—	—	—	—	—	—	—
6250	—	—	—	—	—	—	—	—	—	—

CFM	AVAILABLE EXTERNAL STATIC PRESSURE (in. wg)									
	1.2		1.4		1.6		1.8		2.0	
	rpm	vdc	rpm	vdc	rpm	vdc	rpm	vdc	rpm	vdc
3750	1634	7.4	1705	7.7	1772	8.0	—	—	—	—
4060	1698	7.7	1768	8.0	—	—	—	—	—	—
4375	1763	8.0	—	—	—	—	—	—	—	—
4690	—	—	—	—	—	—	—	—	—	—
5000	—	—	—	—	—	—	—	—	—	—
5310	—	—	—	—	—	—	—	—	—	—
5625	—	—	—	—	—	—	—	—	—	—
5940	—	—	—	—	—	—	—	—	—	—
6250	—	—	—	—	—	—	—	—	—	—

Std/Med Static 1178-2200 rpm

559K*14 – High Static — 12.5 Ton Vertical Supply (rpm - vdc)

CFM	AVAILABLE EXTERNAL STATIC PRESSURE (in. wg)									
	0.2		0.4		0.6		0.8		1.0	
	rpm	vdc	rpm	vdc	rpm	vdc	rpm	vdc	rpm	vdc
3750	1178	5.3	1287	5.8	1386	6.2	1475	6.7	1558	7.0
4060	1260	5.7	1362	6.1	1456	6.6	1543	7.0	1623	7.3
4375	1343	6.0	1438	6.5	1528	6.9	1612	7.3	1690	7.6
4690	1426	6.4	1516	6.8	1602	7.2	1683	7.6	1759	8.0
5000	1511	6.8	1595	7.2	1677	7.6	1755	7.9	1828	8.3
5310	1596	7.2	1675	7.6	1753	7.9	1828	8.3	1899	8.6
5625	1681	7.6	1756	8.0	1830	8.3	1902	8.6	1971	8.9
5940	1767	8.0	1838	8.3	1909	8.7	1978	9.0	2045	9.3
6250	1854	8.4	1921	8.7	1989	9.0	2055	9.3	2119	9.6

CFM	AVAILABLE EXTERNAL STATIC PRESSURE (in. wg)									
	1.2		1.4		1.6		1.8		2.0	
	rpm	vdc	rpm	vdc	rpm	vdc	rpm	vdc	rpm	vdc
3750	1634	7.4	1705	7.7	1772	8.0	1837	8.3	1898	8.6
4060	1698	7.7	1768	8.0	1834	8.3	1897	8.6	1957	8.9
4375	1763	8.0	1832	8.3	1897	8.6	1959	8.9	2018	9.2
4690	1830	8.3	1897	8.6	1961	8.9	2022	9.2	2081	9.5
5000	1898	8.6	1964	8.9	2027	9.2	2087	9.5	2144	9.7
5310	1967	8.9	2031	9.2	2093	9.5	2152	9.8	—	—
5625	2037	9.2	2100	9.5	2161	9.8	—	—	—	—
5940	2109	9.6	2170	9.9	—	—	—	—	—	—
6250	2181	9.9	—	—	—	—	—	—	—	—

High Static 1178-2200 rpm

559K*16 — 15 Ton Vertical Supply (rpm - bhp)

CFM	AVAILABLE EXTERNAL STATIC PRESSURE (in. wg)									
	0.2		0.4		0.6		0.8		1.0	
	rpm	bhp	rpm	bhp	rpm	bhp	rpm	bhp	rpm	bhp
4500	1120	0.73	1201	0.90	1281	1.10	1361	1.32	1441	1.56
4875	1208	0.92	1283	1.10	1357	1.30	1431	1.52	1505	1.77
5250	1297	1.12	1367	1.32	1436	1.52	1504	1.75	1573	2.00
5625	1387	1.36	1452	1.56	1516	1.77	1581	2.01	1645	2.26
6000	1477	1.61	1538	1.82	1598	2.04	1659	2.28	1719	2.54
6375	1568	1.89	1625	2.10	1682	2.33	1739	2.58	1796	2.84
6750	1659	2.20	1713	2.42	1767	2.66	1821	2.91	1874	3.17
7125	1751	2.56	1802	2.79	1891	3.23	1904	3.29	1955	3.56
7500	1842	2.99	1891	3.23	1891	3.23	1988	3.75	2036	4.03

CFM	AVAILABLE EXTERNAL STATIC PRESSURE (in. wg)									
	1.2		1.4		1.6		1.8		2.0	
	rpm	bhp	rpm	bhp	rpm	bhp	rpm	bhp	rpm	bhp
4500	1520	1.83	1597	2.13	1673	2.45	1747	2.79	1818	3.14
4875	1579	2.05	1651	2.34	1723	2.66	1793	2.99	1861	3.35
5250	1642	2.28	1710	2.57	1777	2.89	1844	3.23	1909	3.58
5625	1709	2.54	1773	2.83	1836	3.14	1899	3.48	1961	3.83
6000	1779	2.81	1840	3.11	1899	3.42	1959	3.76	2018	4.11
6375	1853	3.12	1909	3.41	1966	3.73	2022	4.05	2078	4.40
6750	1928	3.45	1982	3.75	2035	4.06	2089	4.39	2142	4.73
7125	2006	3.84	2056	4.14	2107	4.46	2158	4.79	—	—
7500	2085	4.33	2133	4.64	2181	4.96	—	—	—	—

Std/Med Static 1120-2200 rpm, 3.0 Max bhp

High Static 1120-2200 rpm, 5.0 Max bhp

559K*16 – Standard/Medium Static — 15 Ton Vertical Supply (rpm - vdc)

CFM	AVAILABLE EXTERNAL STATIC PRESSURE (in. wg)									
	0.2		0.4		0.6		0.8		1.0	
	rpm	vdc	rpm	vdc	rpm	vdc	rpm	vdc	rpm	vdc
4500	1120	5.0	1201	5.4	1281	5.8	1361	6.1	1441	6.5
4875	1208	5.4	1283	5.8	1357	6.1	1431	6.5	1505	6.8
5250	1297	5.8	1367	6.2	1436	6.5	1504	6.8	1573	7.1
5625	1387	6.2	1452	6.5	1516	6.8	1581	7.1	1645	7.4
6000	1477	6.7	1538	6.9	1598	7.2	1659	7.5	1719	7.8
6375	1568	7.1	1625	7.3	1682	7.6	1739	7.9	1796	8.1
6750	1659	7.5	1713	7.8	1767	8.0	1821	8.3	—	—
7125	1751	7.9	1802	8.2	—	—	—	—	—	—
7500	1842	8.3	—	—	—	—	—	—	—	—

CFM	AVAILABLE EXTERNAL STATIC PRESSURE (in. wg)									
	1.2		1.4		1.6		1.8		2.0	
	rpm	vdc	rpm	vdc	rpm	vdc	rpm	vdc	rpm	vdc
4500	1520	6.9	1597	7.2	1673	7.6	1747	7.9	—	—
4875	1579	7.1	1651	7.5	1723	7.8	1793	8.1	—	—
5250	1642	7.4	1710	7.7	1777	8.0	—	—	—	—
5625	1709	7.7	1773	8.0	1836	8.3	—	—	—	—
6000	1779	8.1	1840	8.3	—	—	—	—	—	—
6375	—	—	—	—	—	—	—	—	—	—
6750	—	—	—	—	—	—	—	—	—	—
7125	—	—	—	—	—	—	—	—	—	—
7500	—	—	—	—	—	—	—	—	—	—

Std/Med Static 1120-2200 rpm

559K*16 – High Static — 15 Ton Vertical Supply (rpm - vdc)

CFM	AVAILABLE EXTERNAL STATIC PRESSURE (in. wg)									
	0.2		0.4		0.6		0.8		1.0	
	rpm	vdc	rpm	vdc	rpm	vdc	rpm	vdc	rpm	vdc
4500	1120	5.0	1201	5.4	1281	5.8	1361	6.1	1441	6.5
4875	1208	5.4	1283	5.8	1357	6.1	1431	6.5	1505	6.8
5250	1297	5.8	1367	6.2	1436	6.5	1504	6.8	1573	7.1
5625	1387	6.2	1452	6.5	1516	6.8	1581	7.1	1645	7.4
6000	1477	6.7	1538	6.9	1598	7.2	1659	7.5	1719	7.8
6375	1568	7.1	1625	7.3	1682	7.6	1739	7.9	1796	8.1
6750	1659	7.5	1713	7.8	1767	8.0	1821	8.3	1874	8.5
7125	1751	7.9	1802	8.2	1853	8.4	1904	8.6	1955	8.9
7500	1842	8.3	1891	8.6	1940	8.8	1988	9.0	2036	9.2

CFM	AVAILABLE EXTERNAL STATIC PRESSURE (in. wg)									
	1.2		1.4		1.6		1.8		2.0	
	rpm	vdc	rpm	vdc	rpm	vdc	rpm	vdc	rpm	vdc
4500	1520	6.9	1597	7.2	1673	7.6	1747	7.9	1818	8.2
4875	1579	7.1	1651	7.5	1723	7.8	1793	8.1	1861	8.4
5250	1642	7.4	1710	7.7	1777	8.0	1844	8.4	1909	8.7
5625	1709	7.7	1773	8.0	1836	8.3	1899	8.6	1961	8.9
6000	1779	8.1	1840	8.3	1899	8.6	1959	8.9	2018	9.2
6375	1853	8.4	1909	8.7	1966	8.9	2022	9.2	2078	9.4
6750	1928	8.7	1982	9.0	2035	9.2	2089	9.5	2142	9.7
7125	2006	9.1	2056	9.3	2107	9.6	2158	9.8	—	—
7500	2085	9.5	2133	9.7	2181	9.9	—	—	—	—

High Static 1120-2200 rpm

559K*08 — 7.5 Ton Horizontal Supply (rpm - bhp)

CFM	AVAILABLE EXTERNAL STATIC PRESSURE (in. wg)									
	0.2		0.4		0.6		0.8		1.0	
	rpm	bhp	rpm	bhp	rpm	bhp	rpm	bhp	rpm	bhp
2250	910	0.28	1046	0.43	1167	0.60	1276	0.78	1376	0.98
2440	966	0.34	1095	0.49	1211	0.67	1316	0.86	1414	1.06
2625	1023	0.40	1145	0.56	1256	0.74	1359	0.94	1453	1.15
2810	1081	0.47	1197	0.64	1304	0.82	1403	1.02	1495	1.24
3000	1141	0.54	1251	0.72	1353	0.91	1449	1.12	1538	1.33
3190	1200	0.63	1306	0.81	1404	1.00	1496	1.21	1583	1.44
3375	1261	0.71	1361	0.90	1456	1.10	1545	1.31	1629	1.54
3560	1322	0.81	1418	1.00	1509	1.20	1595	1.42	1677	1.65
3750	1384	0.91	1476	1.10	1563	1.30	1646	1.52	1725	1.75

CFM	AVAILABLE EXTERNAL STATIC PRESSURE (in. wg)									
	1.2		1.4		1.6		1.8		2.0	
	rpm	bhp	rpm	bhp	rpm	bhp	rpm	bhp	rpm	bhp
2250	1469	1.19	1556	1.42	1639	1.66	1716	1.90	1790	2.16
2440	1505	1.28	1590	1.51	1671	1.75	1748	2.01	1821	2.27
2625	1542	1.37	1626	1.61	1705	1.85	1781	2.11	1853	2.38
2810	1581	1.46	1663	1.70	1741	1.96	1816	2.22	1887	2.49
3000	1622	1.57	1702	1.81	1778	2.06	1852	2.33	1922	2.60
3190	1665	1.67	1743	1.92	1818	2.18	1889	2.44	1958	2.72
3375	1709	1.78	1785	2.03	1858	2.29	1928	2.55	1996	2.83
3560	1755	1.89	1829	2.14	1900	2.40	1969	2.67	2035	2.95
3750	1801	2.00	1874	2.25	1944	2.51	2011	2.78	2076	3.06

Std/Med Static 910-2000 rpm, 2.4 Max bhp

High Static 910-2200 rpm, 3.0 Max bhp

559K*08 – Standard/Medium Static — 7.5 Ton Horizontal Supply (rpm - vdc)

CFM	AVAILABLE EXTERNAL STATIC PRESSURE (in. wg)									
	0.2		0.4		0.6		0.8		1.0	
	rpm	vdc	rpm	vdc	rpm	vdc	rpm	vdc	rpm	vdc
2250	910	4.4	1046	5.1	1167	5.7	1276	6.3	1376	6.8
2440	966	4.7	1095	5.3	1211	5.9	1316	6.5	1414	7.0
2625	1023	5.0	1145	5.6	1256	6.2	1359	6.7	1453	7.2
2810	1081	5.3	1197	5.9	1304	6.4	1403	6.9	1495	7.4
3000	1141	5.6	1251	6.1	1353	6.7	1449	7.2	1538	7.6
3190	1200	5.9	1306	6.4	1404	6.9	1496	7.4	1583	7.9
3375	1261	6.2	1361	6.7	1456	7.2	1545	7.7	1629	8.1
3560	1322	6.5	1418	7.0	1509	7.5	1595	7.9	1677	8.3
3750	1384	6.8	1476	7.3	1563	7.8	1646	8.2	1725	8.6

CFM	AVAILABLE EXTERNAL STATIC PRESSURE (in. wg)									
	1.2		1.4		1.6		1.8		2.0	
	rpm	vdc	rpm	vdc	rpm	vdc	rpm	vdc	rpm	vdc
2250	1469	7.3	1556	7.7	1639	8.1	1716	8.5	1790	8.9
2440	1505	7.5	1590	7.9	1671	8.3	1748	8.7	1821	9.1
2625	1542	7.6	1626	8.1	1705	8.5	1781	8.9	1853	9.2
2810	1581	7.8	1663	8.3	1741	8.7	1816	9.1	—	—
3000	1622	8.1	1702	8.5	1778	8.9	1852	9.2	—	—
3190	1665	8.3	1743	8.7	1818	9.1	—	—	—	—
3375	1709	8.5	1785	8.9	1858	9.3	—	—	—	—
3560	1755	8.7	1829	9.1	—	—	—	—	—	—
3750	1801	9.0	1874	9.4	—	—	—	—	—	—

Std/Med Static 910-2000 rpm

559K*08 – High Static — 7.5 Ton Horizontal Supply (rpm - vdc)

CFM	AVAILABLE EXTERNAL STATIC PRESSURE (in. wg)									
	0.2		0.4		0.6		0.8		1.0	
	rpm	vdc	rpm	vdc	rpm	vdc	rpm	vdc	rpm	vdc
2250	910	4.0	1046	4.7	1167	5.2	1276	5.7	1376	6.2
2440	966	4.3	1095	4.9	1211	5.4	1316	5.9	1414	6.4
2625	1023	4.6	1145	5.1	1256	5.6	1359	6.1	1453	6.6
2810	1081	4.8	1197	5.4	1304	5.9	1403	6.3	1495	6.7
3000	1141	5.1	1251	5.6	1353	6.1	1449	6.5	1538	6.9
3190	1200	5.4	1306	5.9	1404	6.3	1496	6.8	1583	7.2
3375	1261	5.7	1361	6.1	1456	6.6	1545	7.0	1629	7.4
3560	1322	5.9	1418	6.4	1509	6.8	1595	7.2	1677	7.6
3750	1384	6.2	1476	6.7	1563	7.1	1646	7.4	1725	7.8

CFM	AVAILABLE EXTERNAL STATIC PRESSURE (in. wg)									
	1.2		1.4		1.6		1.8		2.0	
	rpm	vdc	rpm	vdc	rpm	vdc	rpm	vdc	rpm	vdc
2250	1469	6.6	1556	7.0	1639	7.4	1716	7.8	1790	8.1
2440	1505	6.8	1590	7.2	1671	7.6	1748	7.9	1821	8.3
2625	1542	7.0	1626	7.4	1705	7.7	1781	8.1	1853	8.4
2810	1581	7.1	1663	7.5	1741	7.9	1816	8.2	1887	8.6
3000	1622	7.3	1702	7.7	1778	8.1	1852	8.4	1922	8.7
3190	1665	7.5	1743	7.9	1818	8.2	1889	8.6	1958	8.9
3375	1709	7.7	1785	8.1	1858	8.4	1928	8.7	1996	9.1
3560	1755	7.9	1829	8.3	1900	8.6	1969	8.9	2035	9.2
3750	1801	8.2	1874	8.5	1944	8.8	2011	9.1	2076	9.4

High Static 910-2200 rpm

559K*09 — 8.5 Ton Horizontal Supply (rpm - bhp)

CFM	AVAILABLE EXTERNAL STATIC PRESSURE (in. wg)									
	0.2		0.4		0.6		0.8		1.0	
	rpm	bhp	rpm	bhp	rpm	bhp	rpm	bhp	rpm	bhp
2550	947	0.31	1065	0.45	1178	0.60	1284	0.78	1382	0.97
2760	1010	0.38	1120	0.51	1226	0.67	1327	0.85	1422	1.05
2975	1074	0.45	1177	0.59	1277	0.75	1373	0.94	1464	1.13
3190	1139	0.53	1235	0.67	1329	0.84	1421	1.02	1508	1.22
3400	1205	0.62	1296	0.77	1384	0.93	1471	1.12	1555	1.32
3610	1272	0.71	1357	0.86	1441	1.03	1524	1.22	1604	1.43
3825	1340	0.81	1420	0.97	1499	1.14	1578	1.33	1655	1.53
4040	1407	0.92	1484	1.08	1559	1.25	1634	1.44	1707	1.64
4250	1476	1.03	1548	1.19	1620	1.36	1691	1.55	1762	1.75

CFM	AVAILABLE EXTERNAL STATIC PRESSURE (in. wg)									
	1.2		1.4		1.6		1.8		2.0	
	rpm	bhp	rpm	bhp	rpm	bhp	rpm	bhp	rpm	bhp
2550	1473	1.18	1558	1.39	1638	1.62	1713	1.85	1785	2.10
2760	1511	1.26	1595	1.48	1674	1.71	1748	1.95	1819	2.20
2975	1551	1.35	1633	1.57	1710	1.81	1784	2.05	1855	2.31
3190	1592	1.44	1672	1.67	1749	1.91	1822	2.16	1891	2.41
3400	1636	1.54	1714	1.77	1789	2.01	1860	2.26	1929	2.52
3610	1682	1.64	1757	1.87	1830	2.12	1900	2.37	1968	2.63
3825	1730	1.75	1803	1.98	1873	2.22	1942	2.48	2008	2.74
4040	1779	1.86	1850	2.09	1918	2.33	1985	2.58	2050	2.84
4250	1831	1.97	1899	2.19	1965	2.43	2030	2.68	2093	2.94

Std/Med Static 947-2000 rpm, 2.4 Max bhp

High Static 947-2200 rpm, 3.0 Max bhp

559K*09 – Standard/Medium Static — 8.5 Ton Horizontal Supply (rpm - vdc)

CFM	AVAILABLE EXTERNAL STATIC PRESSURE (in. wg)									
	0.2		0.4		0.6		0.8		1.0	
	rpm	vdc	rpm	vdc	rpm	vdc	rpm	vdc	rpm	vdc
2550	947	4.6	1065	5.2	1178	5.8	1284	6.3	1382	6.8
2760	1010	4.9	1120	5.5	1226	6.0	1327	6.5	1422	7.0
2975	1074	5.2	1177	5.8	1277	6.3	1373	6.8	1464	7.2
3190	1139	5.6	1235	6.1	1329	6.5	1421	7.0	1508	7.5
3400	1205	5.9	1296	6.4	1384	6.8	1471	7.3	1555	7.7
3610	1272	6.3	1357	6.7	1441	7.1	1524	7.6	1604	8.0
3825	1340	6.6	1420	7.0	1499	7.4	1578	7.8	1655	8.2
4040	1407	7.0	1484	7.3	1559	7.7	1634	8.1	1707	8.5
4250	1476	7.3	1548	7.7	1620	8.0	1691	8.4	1762	8.8

CFM	AVAILABLE EXTERNAL STATIC PRESSURE (in. wg)									
	1.2		1.4		1.6		1.8		2.0	
	rpm	vdc	rpm	vdc	rpm	vdc	rpm	vdc	rpm	vdc
2550	1473	7.3	1558	7.7	1638	8.1	1713	8.5	1785	8.9
2760	1511	7.5	1595	7.9	1674	8.3	1748	8.7	1819	9.1
2975	1551	7.7	1633	8.1	1710	8.5	1784	8.9	1855	9.3
3190	1592	7.9	1672	8.3	1749	8.7	1822	9.1	—	—
3400	1636	8.1	1714	8.5	1789	8.9	1860	9.3	—	—
3610	1682	8.4	1757	8.8	1830	9.1	1900	9.5	—	—
3825	1730	8.6	1803	9.0	1873	9.3	—	—	—	—
4040	1779	8.9	1850	9.2	1918	9.6	—	—	—	—
4250	1831	9.1	1899	9.5	—	—	—	—	—	—

Std/Med Static 947-2000 rpm

559K*09 – High Static — 8.5 Ton Horizontal Supply (rpm - vdc)

CFM	AVAILABLE EXTERNAL STATIC PRESSURE (in. wg)									
	0.2		0.4		0.6		0.8		1.0	
	rpm	vdc	rpm	vdc	rpm	vdc	rpm	vdc	rpm	vdc
2550	947	4.2	1065	4.8	1178	5.3	1284	5.8	1382	6.2
2760	1010	4.5	1120	5.0	1226	5.5	1327	6.0	1422	6.4
2975	1074	4.8	1177	5.3	1277	5.7	1373	6.2	1464	6.6
3190	1139	5.1	1235	5.5	1329	6.0	1421	6.4	1508	6.8
3400	1205	5.4	1296	5.8	1384	6.2	1471	6.6	1555	7.0
3610	1272	5.7	1357	6.1	1441	6.5	1524	6.9	1604	7.2
3825	1340	6.0	1420	6.4	1499	6.8	1578	7.1	1655	7.5
4040	1407	6.3	1484	6.7	1559	7.0	1634	7.4	1707	7.7
4250	1476	6.7	1548	7.0	1620	7.3	1691	7.7	1762	8.0

CFM	AVAILABLE EXTERNAL STATIC PRESSURE (in. wg)									
	1.2		1.4		1.6		1.8		2.0	
	rpm	vdc	rpm	vdc	rpm	vdc	rpm	vdc	rpm	vdc
2550	1473	6.6	1558	7.0	1638	7.4	1713	7.8	1785	8.1
2760	1511	6.8	1595	7.2	1674	7.6	1748	7.9	1819	8.2
2975	1551	7.0	1633	7.4	1710	7.7	1784	8.1	1855	8.4
3190	1592	7.2	1672	7.6	1749	7.9	1822	8.3	1891	8.6
3400	1636	7.4	1714	7.8	1789	8.1	1860	8.4	1929	8.7
3610	1682	7.6	1757	8.0	1830	8.3	1900	8.6	1968	8.9
3825	1730	7.8	1803	8.2	1873	8.5	1942	8.8	2008	9.1
4040	1779	8.1	1850	8.4	1918	8.7	1985	9.0	2050	9.3
4250	1831	8.3	1899	8.6	1965	8.9	2030	9.2	2093	9.5

High Static 947-2200 rpm

559K*12 — 10 Ton Horizontal Supply (rpm - bhp)

CFM	AVAILABLE EXTERNAL STATIC PRESSURE (in. wg)									
	0.2		0.4		0.6		0.8		1.0	
	rpm	bhp	rpm	bhp	rpm	bhp	rpm	bhp	rpm	bhp
3000	1100	0.49	1202	0.64	1301	0.81	1396	1.00	1487	1.21
3250	1176	0.59	1270	0.74	1363	0.92	1453	1.11	1539	1.32
3500	1252	0.70	1341	0.86	1428	1.04	1512	1.24	1595	1.45
3750	1330	0.83	1413	1.00	1495	1.18	1575	1.38	1653	1.60
4000	1409	0.97	1487	1.14	1563	1.33	1639	1.53	1714	1.75
4250	1488	1.12	1561	1.29	1634	1.48	1706	1.69	1776	1.90
4500	1568	1.28	1637	1.45	1706	1.65	1774	1.85	1841	2.07
4750	1648	1.44	1714	1.62	1779	1.81	1844	2.02	1908	2.23
5000	1728	1.61	1791	1.79	1853	1.98	1915	2.19	1976	2.40

CFM	AVAILABLE EXTERNAL STATIC PRESSURE (in. wg)									
	1.2		1.4		1.6		1.8		2.0	
	rpm	bhp	rpm	bhp	rpm	bhp	rpm	bhp	rpm	bhp
3000	1573	1.43	1654	1.66	1732	1.91	1805	2.16	1875	2.42
3250	1622	1.55	1702	1.79	1777	2.04	1849	2.29	1919	2.57
3500	1674	1.68	1751	1.92	1825	2.18	1895	2.44	1964	2.72
3750	1729	1.83	1803	2.07	1874	2.33	1943	2.59	2010	2.87
4000	1786	1.98	1857	2.22	1926	2.48	1993	2.75	2058	3.03
4250	1846	2.14	1914	2.38	1980	2.64	2045	2.91	2108	3.18
4500	1908	2.30	1973	2.54	2036	2.80	2099	3.06	2160	3.34
4750	1971	2.46	2034	2.71	2095	2.96	2155	3.22	—	—
5000	2036	2.63	2096	2.87	2155	3.11	—	—	—	—

Std/Med Static 1100-2000 rpm, 2.4 Max bhp

High Static 1100-2200 rpm, 5.0 Max bhp

559K*12 – Standard/Medium Static — 10 Ton Horizontal Supply (rpm - vdc)

CFM	AVAILABLE EXTERNAL STATIC PRESSURE (in. wg)									
	0.2		0.4		0.6		0.8		1.0	
	rpm	vdc	rpm	vdc	rpm	vdc	rpm	vdc	rpm	vdc
3000	1100	5.4	1202	5.9	1301	6.4	1396	6.9	1487	7.4
3250	1176	5.8	1270	6.2	1363	6.7	1453	7.2	1539	7.6
3500	1252	6.2	1341	6.6	1428	7.1	1512	7.5	1595	7.9
3750	1330	6.6	1413	7.0	1495	7.4	1575	7.8	1653	8.2
4000	1409	7.0	1487	7.4	1563	7.8	1639	8.1	1714	8.5
4250	1488	7.4	1561	7.7	1634	8.1	1706	8.5	1776	8.8
4500	1568	7.8	1637	8.1	1706	8.5	1774	8.8	1841	9.2
4750	1648	8.2	1714	8.5	1779	8.9	1844	9.2	1908	9.5
5000	1728	8.6	1791	8.9	1853	9.2	1915	9.6	1976	9.9

CFM	AVAILABLE EXTERNAL STATIC PRESSURE (in. wg)									
	1.2		1.4		1.6		1.8		2.0	
	rpm	vdc	rpm	vdc	rpm	vdc	rpm	vdc	rpm	vdc
3000	1573	7.8	1654	8.2	1732	8.6	1805	9.0	1875	9.4
3250	1622	8.1	1702	8.5	1777	8.9	1849	9.2	—	—
3500	1674	8.3	1751	8.7	1825	9.1	—	—	—	—
3750	1729	8.6	1803	9.0	1874	9.4	—	—	—	—
4000	1786	8.9	1857	9.3	—	—	—	—	—	—
4250	1846	9.2	1914	9.6	—	—	—	—	—	—
4500	1908	9.5	—	—	—	—	—	—	—	—
4750	—	—	—	—	—	—	—	—	—	—
5000	—	—	—	—	—	—	—	—	—	—

Std/Med Static 1100-2000 rpm

559K*12 – High Static — 10 Ton Horizontal Supply (rpm - vdc)

CFM	AVAILABLE EXTERNAL STATIC PRESSURE (in. wg)									
	0.2		0.4		0.6		0.8		1.0	
	rpm	vdc	rpm	vdc	rpm	vdc	rpm	vdc	rpm	vdc
3000	1100	4.9	1202	5.4	1301	5.9	1396	6.3	1487	6.7
3250	1176	5.3	1270	5.7	1363	6.1	1453	6.6	1539	6.9
3500	1252	5.6	1341	6.0	1428	6.4	1512	6.8	1595	7.2
3750	1330	6.0	1413	6.4	1495	6.7	1575	7.1	1653	7.5
4000	1409	6.3	1487	6.7	1563	7.1	1639	7.4	1714	7.8
4250	1488	6.7	1561	7.1	1634	7.4	1706	7.7	1776	8.0
4500	1568	7.1	1637	7.4	1706	7.7	1774	8.0	1841	8.3
4750	1648	7.5	1714	7.8	1779	8.1	1844	8.4	1908	8.7
5000	1728	7.8	1791	8.1	1853	8.4	1915	8.7	1976	9.0

CFM	AVAILABLE EXTERNAL STATIC PRESSURE (in. wg)									
	1.2		1.4		1.6		1.8		2.0	
	rpm	vdc	rpm	vdc	rpm	vdc	rpm	vdc	rpm	vdc
3000	1573	7.1	1654	7.5	1732	7.8	1805	8.2	1875	8.5
3250	1622	7.3	1702	7.7	1777	8.0	1849	8.4	1919	8.7
3500	1674	7.6	1751	7.9	1825	8.3	1895	8.6	1964	8.9
3750	1729	7.8	1803	8.2	1874	8.5	1943	8.8	2010	9.1
4000	1786	8.1	1857	8.4	1926	8.7	1993	9.0	2058	9.3
4250	1846	8.4	1914	8.7	1980	9.0	2045	9.3	2108	9.6
4500	1908	8.7	1973	9.0	2036	9.2	2099	9.5	2160	9.8
4750	1971	8.9	2034	9.2	2095	9.5	2155	9.8	—	—
5000	2036	9.2	2096	9.5	2155	9.8	—	—	—	—

High Static 1100-2200 rpm

559K*14 — 12.5 Ton Horizontal Supply (rpm - bhp)

CFM	AVAILABLE EXTERNAL STATIC PRESSURE (in. wg)									
	0.2		0.4		0.6		0.8		1.0	
	rpm	bhp	rpm	bhp	rpm	bhp	rpm	bhp	rpm	bhp
3750	1072	0.65	1166	0.83	1266	1.07	1363	1.33	1454	1.62
4060	1148	0.79	1233	0.98	1324	1.22	1416	1.49	1504	1.78
4375	1226	0.96	1303	1.15	1386	1.39	1472	1.66	1556	1.97
4690	1304	1.15	1374	1.35	1451	1.59	1530	1.86	1610	2.17
5000	1383	1.37	1448	1.57	1518	1.81	1592	2.08	1667	2.39
5310	1463	1.60	1523	1.81	1588	2.05	1656	2.33	1726	2.63
5625	1543	1.86	1599	2.07	1659	2.31	1723	2.59	1789	2.90
5940	1623	2.14	1675	2.35	1732	2.60	1791	2.87	1853	3.18
6250	1704	2.44	1753	2.65	1806	2.90	1861	3.17	1919	3.48

CFM	AVAILABLE EXTERNAL STATIC PRESSURE (in. wg)									
	1.2		1.4		1.6		1.8		2.0	
	rpm	bhp	rpm	bhp	rpm	bhp	rpm	bhp	rpm	bhp
3750	1540	1.92	1620	2.24	1694	2.56	1765	2.89	1833	3.24
4060	1587	2.09	1666	2.42	1740	2.76	1810	3.11	1877	3.46
4375	1637	2.29	1713	2.62	1786	2.97	1856	3.34	1922	3.71
4690	1688	2.50	1763	2.85	1834	3.20	1902	3.57	1968	3.96
5000	1741	2.72	1813	3.08	1883	3.45	1950	3.83	2015	4.22
5310	1797	2.97	1867	3.33	1934	3.70	2000	4.10	2063	4.50
5625	1855	3.23	1922	3.60	1987	3.97	2050	4.36	2112	4.77
5940	1915	3.51	1979	3.88	2042	4.26	2103	4.65	2163	5.06
6250	1978	3.81	2038	4.17	2098	4.55	2158	4.95	—	—

Std/Med Static 1072-2200 rpm, 3.0 Max bhp

High Static 1072-2200 rpm, 5.0 Max bhp

559K*14 – Standard/Medium Static — 12.5 Ton Horizontal Supply (rpm - vdc)

CFM	AVAILABLE EXTERNAL STATIC PRESSURE (in. wg)									
	0.2		0.4		0.6		0.8		1.0	
	rpm	vdc	rpm	vdc	rpm	vdc	rpm	vdc	rpm	vdc
3750	1072	4.8	1166	5.2	1266	5.7	1363	6.1	1454	6.6
4060	1148	5.1	1233	5.5	1324	6.0	1416	6.4	1504	6.8
4375	1226	5.5	1303	5.9	1386	6.2	1472	6.6	1556	7.0
4690	1304	5.9	1374	6.2	1451	6.5	1530	6.9	1610	7.3
5000	1383	6.2	1448	6.5	1518	6.9	1592	7.2	1667	7.5
5310	1463	6.6	1523	6.9	1588	7.2	1656	7.5	1726	7.8
5625	1543	7.0	1599	7.2	1659	7.5	1723	7.8	1789	8.1
5940	1623	7.3	1675	7.6	1732	7.8	1791	8.1	—	—
6250	1704	7.7	1753	7.9	1806	8.2	—	—	—	—

CFM	AVAILABLE EXTERNAL STATIC PRESSURE (in. wg)									
	1.2		1.4		1.6		1.8		2.0	
	rpm	vdc	rpm	vdc	rpm	vdc	rpm	vdc	rpm	vdc
3750	1540	7.0	1620	7.3	1694	7.7	1765	8.0	—	—
4060	1587	7.2	1666	7.5	1740	7.9	—	—	—	—
4375	1637	7.4	1713	7.8	1786	8.1	—	—	—	—
4690	1688	7.6	1763	8.0	—	—	—	—	—	—
5000	1741	7.9	—	—	—	—	—	—	—	—
5310	1797	8.1	—	—	—	—	—	—	—	—
5625	—	—	—	—	—	—	—	—	—	—
5940	—	—	—	—	—	—	—	—	—	—
6250	—	—	—	—	—	—	—	—	—	—

Std/Med Static 1072-2200 rpm

559K*14 – High Static — 12.5 Ton Horizontal Supply (rpm - vdc)

CFM	AVAILABLE EXTERNAL STATIC PRESSURE (in. wg)									
	0.2		0.4		0.6		0.8		1.0	
	rpm	vdc	rpm	vdc	rpm	vdc	rpm	vdc	rpm	vdc
3750	1072	4.8	1166	5.2	1266	5.7	1363	6.1	1454	6.6
4060	1148	5.1	1233	5.5	1324	6.0	1416	6.4	1504	6.8
4375	1226	5.5	1303	5.9	1386	6.2	1472	6.6	1556	7.0
4690	1304	5.9	1374	6.2	1451	6.5	1530	6.9	1610	7.3
5000	1383	6.2	1448	6.5	1518	6.9	1592	7.2	1667	7.5
5310	1463	6.6	1523	6.9	1588	7.2	1656	7.5	1726	7.8
5625	1543	7.0	1599	7.2	1659	7.5	1723	7.8	1789	8.1
5940	1623	7.3	1675	7.6	1732	7.8	1791	8.1	1853	8.4
6250	1704	7.7	1753	7.9	1806	8.2	1861	8.4	1919	8.7

CFM	AVAILABLE EXTERNAL STATIC PRESSURE (in. wg)									
	1.2		1.4		1.6		1.8		2.0	
	rpm	vdc	rpm	vdc	rpm	vdc	rpm	vdc	rpm	vdc
3750	1540	7.0	1620	7.3	1694	7.7	1765	8.0	1833	8.3
4060	1587	7.2	1666	7.5	1740	7.9	1810	8.2	1877	8.5
4375	1637	7.4	1713	7.8	1786	8.1	1856	8.4	1922	8.7
4690	1688	7.6	1763	8.0	1834	8.3	1902	8.6	1968	8.9
5000	1741	7.9	1813	8.2	1883	8.5	1950	8.8	2015	9.1
5310	1797	8.1	1867	8.5	1934	8.8	2000	9.1	2063	9.4
5625	1855	8.4	1922	8.7	1987	9.0	2050	9.3	2112	9.6
5940	1915	8.7	1979	9.0	2042	9.3	2103	9.6	2163	9.8
6250	1978	9.0	2038	9.3	2098	9.5	2158	9.8	—	—

High Static 1072-2200 rpm

559K*16 — 15 Ton Horizontal Supply (rpm - bhp)

CFM	AVAILABLE EXTERNAL STATIC PRESSURE (in. wg)									
	0.2		0.4		0.6		0.8		1.0	
	rpm	bhp	rpm	bhp	rpm	bhp	rpm	bhp	rpm	bhp
4500	1117	0.73	1198	0.90	1278	1.09	1358	1.31	1438	1.55
4875	1205	0.91	1279	1.09	1353	1.29	1427	1.51	1501	1.76
5250	1294	1.12	1363	1.30	1432	1.51	1500	1.74	1569	1.99
5625	1383	1.34	1448	1.54	1512	1.76	1576	1.99	1640	2.24
6000	1473	1.60	1534	1.80	1594	2.02	1654	2.26	1714	2.52
6375	1564	1.88	1621	2.09	1678	2.32	1734	2.56	1791	2.82
6750	1655	2.18	1709	2.40	1762	2.63	1816	2.88	1869	3.14
7125	1746	2.54	1797	2.76	1848	3.01	1899	3.26	1949	3.53
7500	1838	2.97	1886	3.21	1935	3.46	1983	3.73	2031	4.00

CFM	AVAILABLE EXTERNAL STATIC PRESSURE (in. wg)									
	1.2		1.4		1.6		1.8		2.0	
	rpm	bhp	rpm	bhp	rpm	bhp	rpm	bhp	rpm	bhp
4500	1516	1.82	1594	2.12	1670	2.43	1744	2.77	1816	3.13
4875	1575	2.03	1647	2.32	1719	2.64	1790	2.98	1858	3.33
5250	1638	2.26	1706	2.56	1773	2.87	1840	3.21	1905	3.56
5625	1704	2.51	1768	2.81	1832	3.12	1895	3.46	1957	3.81
6000	1775	2.79	1835	3.09	1894	3.39	1954	3.73	2013	4.08
6375	1848	3.09	1904	3.38	1961	3.70	2017	4.02	2073	4.37
6750	1923	3.43	1976	3.72	2030	4.03	2083	4.35	2136	4.69
7125	2000	3.81	2051	4.11	2101	4.42	2152	4.75	—	—
7500	2079	4.29	2127	4.60	2175	4.92	—	—	—	—

Std/Med Static 1117-2200 rpm, 3.0 Max bhp

High Static 1117-2200 rpm, 5.0 Max bhp

559K*16 – Standard/Medium Static — 15 Ton Horizontal Supply (rpm - vdc)

CFM	AVAILABLE EXTERNAL STATIC PRESSURE (in. wg)									
	0.2		0.4		0.6		0.8		1.0	
	rpm	vdc	rpm	vdc	rpm	vdc	rpm	vdc	rpm	vdc
4500	1117	5.0	1198	5.4	1278	5.7	1358	6.1	1438	6.5
4875	1205	5.4	1279	5.7	1353	6.1	1427	6.4	1501	6.8
5250	1294	5.8	1363	6.1	1432	6.5	1500	6.8	1569	7.1
5625	1383	6.2	1448	6.5	1512	6.8	1576	7.1	1640	7.4
6000	1473	6.6	1534	6.9	1594	7.2	1654	7.5	1714	7.8
6375	1564	7.1	1621	7.3	1678	7.6	1734	7.8	1791	8.1
6750	1655	7.5	1709	7.7	1762	8.0	1816	8.2	1869	8.5
7125	1746	7.9	1797	8.1	1848	8.4	—	—	—	—
7500	1838	8.3	—	—	—	—	—	—	—	—

CFM	AVAILABLE EXTERNAL STATIC PRESSURE (in. wg)									
	1.2		1.4		1.6		1.8		2.0	
	rpm	vdc	rpm	vdc	rpm	vdc	rpm	vdc	rpm	vdc
4500	1516	6.8	1594	7.2	1670	7.6	1744	7.9	—	—
4875	1575	7.1	1647	7.4	1719	7.8	1790	8.1	—	—
5250	1638	7.4	1706	7.7	1773	8.0	—	—	—	—
5625	1704	7.7	1768	8.0	—	—	—	—	—	—
6000	1775	8.0	—	—	—	—	—	—	—	—
6375	—	—	—	—	—	—	—	—	—	—
6750	—	—	—	—	—	—	—	—	—	—
7125	—	—	—	—	—	—	—	—	—	—
7500	—	—	—	—	—	—	—	—	—	—

Std/Med Static 1117-2200 rpm

559K*16 – High Static — 15 Ton Horizontal Supply (rpm - vdc)

CFM	AVAILABLE EXTERNAL STATIC PRESSURE (in. wg)									
	0.2		0.4		0.6		0.8		1.0	
	rpm	vdc	rpm	vdc	rpm	vdc	rpm	vdc	rpm	vdc
4500	1117	5.0	1198	5.4	1278	5.7	1358	6.1	1438	6.5
4875	1205	5.4	1279	5.7	1353	6.1	1427	6.4	1501	6.8
5250	1294	5.8	1363	6.1	1432	6.5	1500	6.8	1569	7.1
5625	1383	6.2	1448	6.5	1512	6.8	1576	7.1	1640	7.4
6000	1473	6.6	1534	6.9	1594	7.2	1654	7.5	1714	7.8
6375	1564	7.1	1621	7.3	1678	7.6	1734	7.8	1791	8.1
6750	1655	7.5	1709	7.7	1762	8.0	1816	8.2	1869	8.5
7125	1746	7.9	1797	8.1	1848	8.4	1899	8.6	1949	8.8
7500	1838	8.3	1886	8.6	1935	8.8	1983	9.0	2031	9.2

CFM	AVAILABLE EXTERNAL STATIC PRESSURE (in. wg)									
	1.2		1.4		1.6		1.8		2.0	
	rpm	vdc	rpm	vdc	rpm	vdc	rpm	vdc	rpm	vdc
4500	1516	6.8	1594	7.2	1670	7.6	1744	7.9	1816	8.2
4875	1575	7.1	1647	7.4	1719	7.8	1790	8.1	1858	8.4
5250	1638	7.4	1706	7.7	1773	8.0	1840	8.3	1905	8.6
5625	1704	7.7	1768	8.0	1832	8.3	1895	8.6	1957	8.9
6000	1775	8.0	1835	8.3	1894	8.6	1954	8.9	2013	9.1
6375	1848	8.4	1904	8.6	1961	8.9	2017	9.2	2073	9.4
6750	1923	8.7	1976	9.0	2030	9.2	2083	9.5	2136	9.7
7125	2000	9.1	2051	9.3	2101	9.5	2152	9.8	—	—
7500	2079	9.4	2127	9.7	2175	9.9	—	—	—	—

High Static 1117-2200 rpm

APPENDIX D — WIRING DIAGRAMS

559K*08-16 — Wiring Diagrams — Standard/Medium SCCR

SIZE	VOLTAGE	CONTROL	PAGE	POWER	PAGE
559K*08-12 Electro-Mechanical POL224 Controller	208/230-3-60	48TM007516	87	48TM005717	90
	460-3-60				
	575-3-60			48TM005994	91
559K*14 Electro-Mechanical POL224 Controller	208/230-3-60	48TM007518	88	48TM005988	92
	460-3-60			48TM005987	93
	575-3-60				
559K*16 Electro-Mechanical POL224 Controller	208/230-3-60	50TM002596	89	50TM001913	94
	460-3-60				
	575-3-60			50TM001915	95

559K*08-16 — Wiring Diagrams — High SCCR

SIZE	VOLTAGE	CONTROL	PAGE	POWER	PAGE
559K*08-12 Electro-Mechanical POL224 Controller	208/230-3-60	48TM007516	87	48TM008023	96
	460-3-60				
559K*14 Electro-Mechanical POL224 Controller	208/230-3-60	48TM007518	88	48TM008025	97
	460-3-60			48TM008026	98
559K*16 Electro-Mechanical POL224 Controller	208/230-3-60	50TM002596	89	50TM002450	99
	460-3-60				

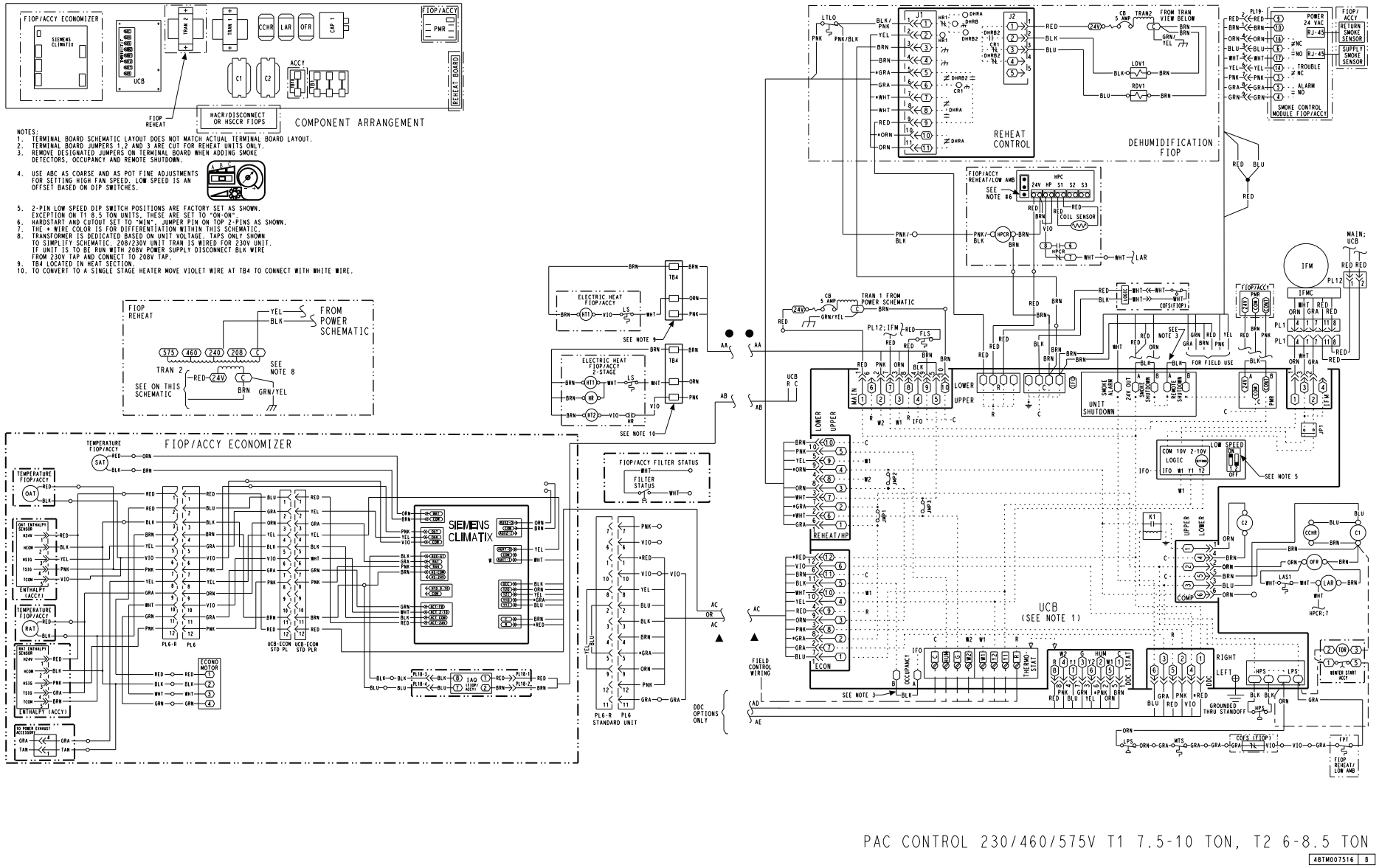

Fig. B — 559K*08-12 Control Wiring Diagram — 208/230, 460, 575-3-60 Unit Electro-Mechanical with POL224 Controller — Standard/Medium and High SCCR

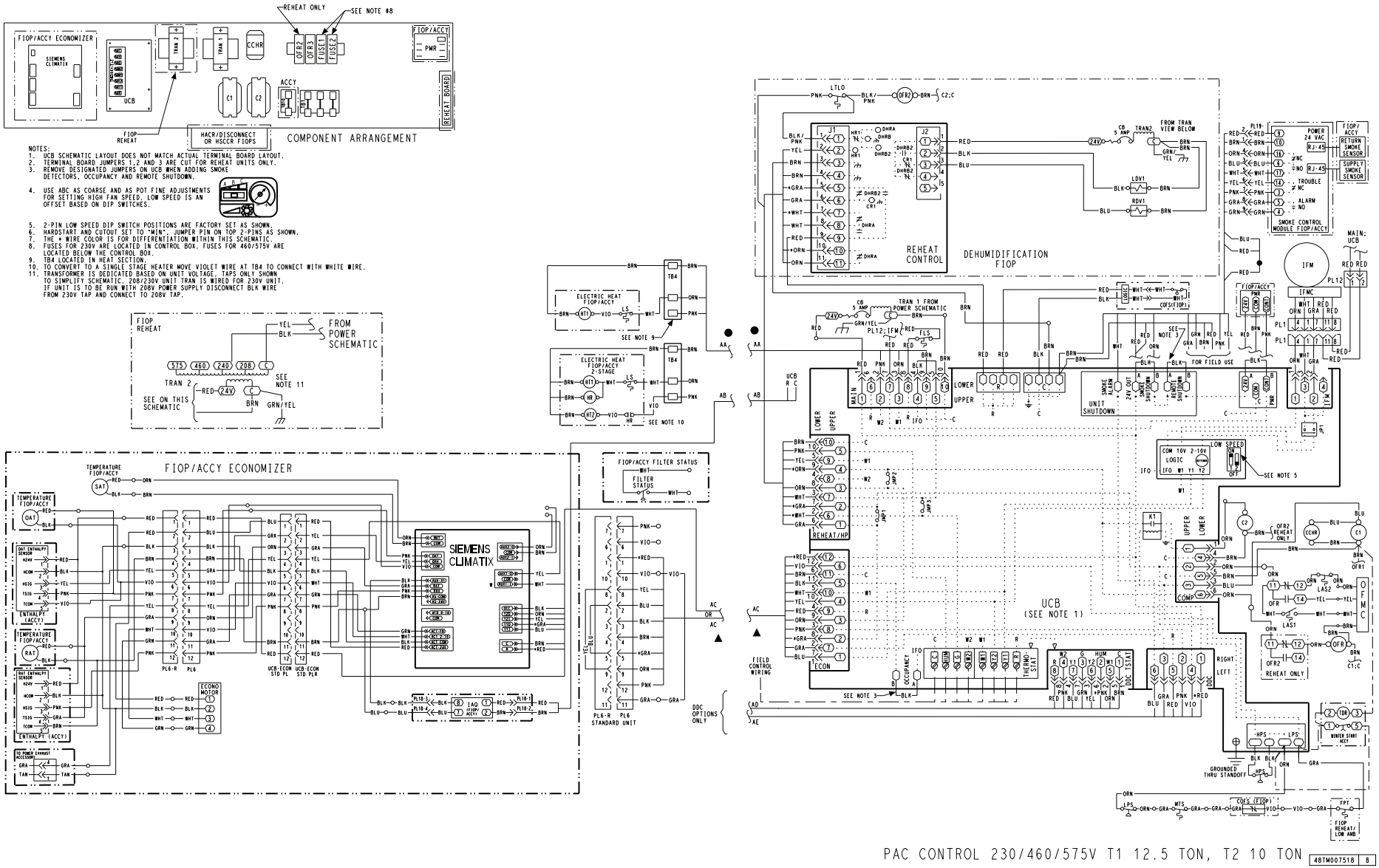

Fig. C — 559K*14 Control Wiring Diagram — 208/230, 460, 575-3-60 Unit
Electro-Mechanical with POL224 Controller — Standard/Medium and High SCCR

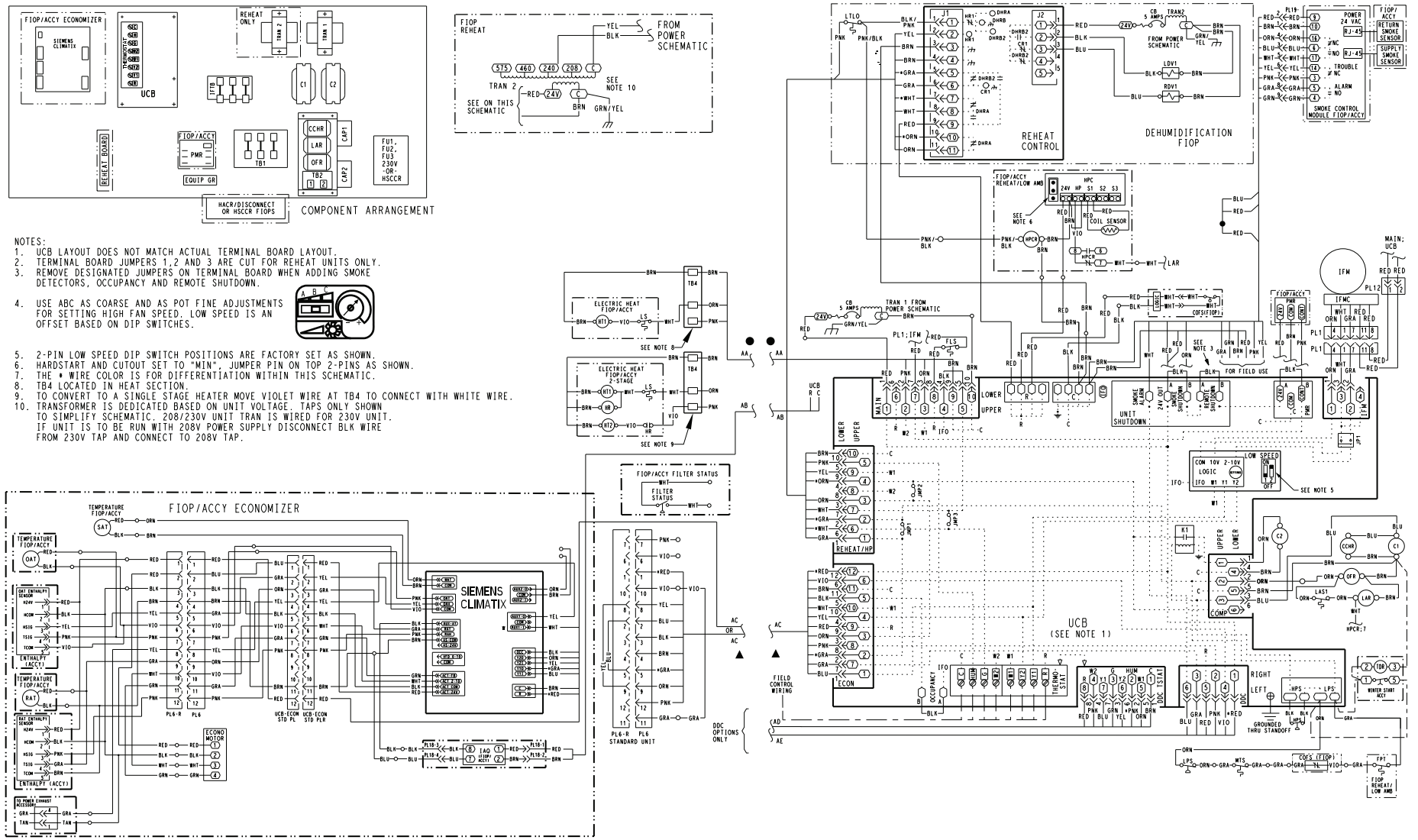

Fig. D — 559K*16 Control Wiring Diagram — 208/230, 460, 575-3-60 Unit Electro-Mechanical with POL224 Controller — Standard/Medium and High SCCR

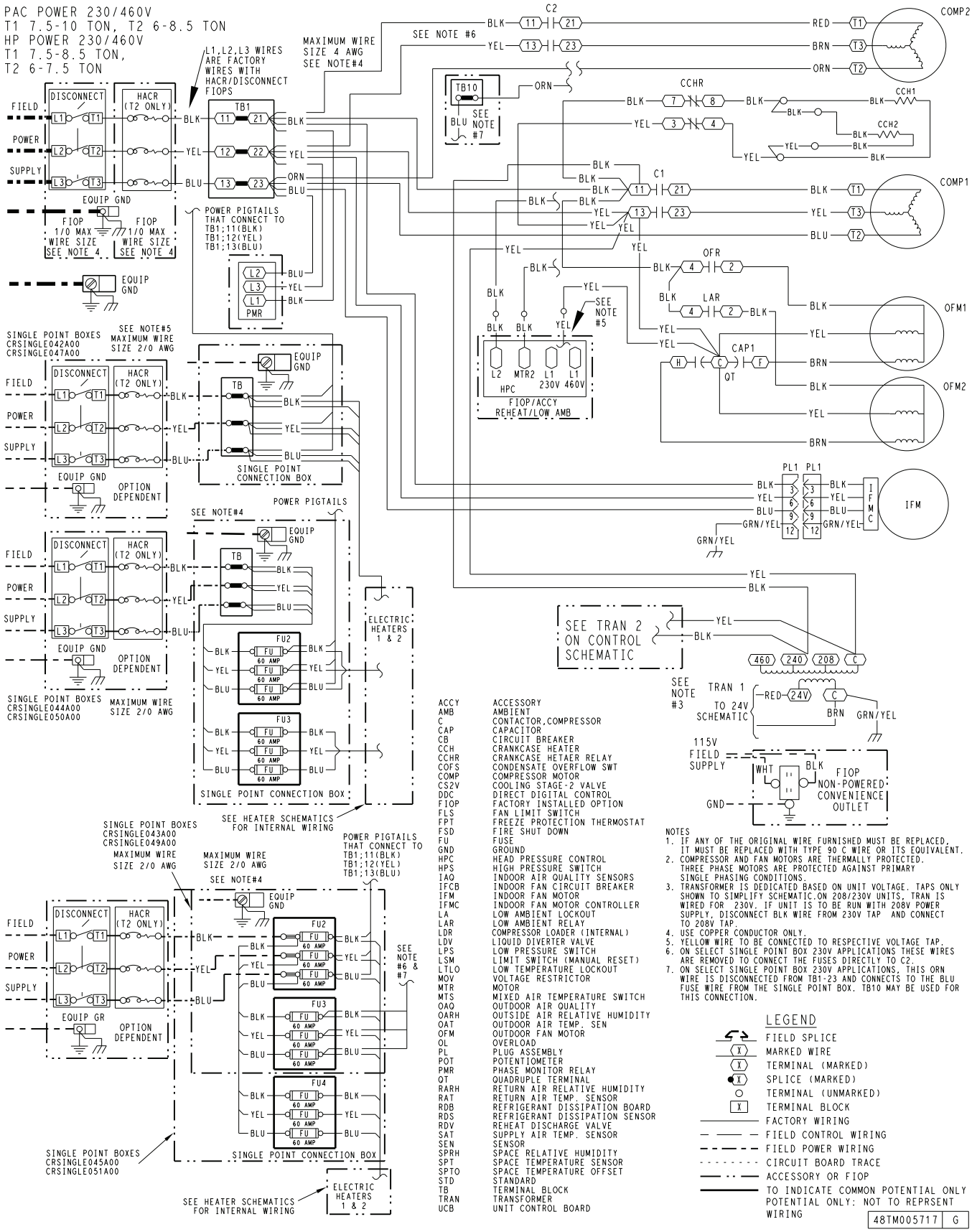

Fig. E — 559K*08-12 Power Wiring Diagram — 208/230, 460-3-60 Unit Electro-Mechanical with POL224 Controller — Standard/Medium SCCR

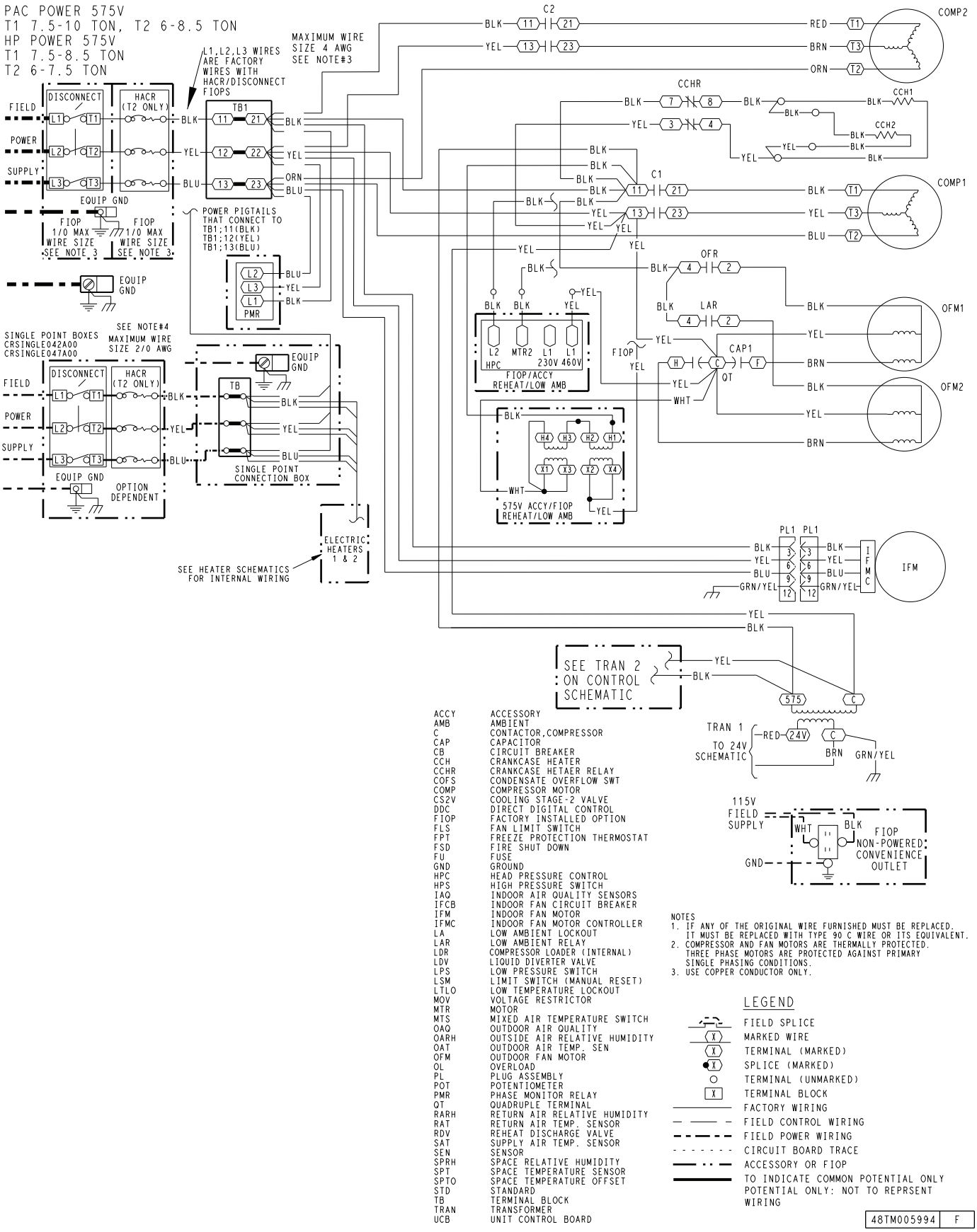

Fig. F — 559K*08-12 Power Wiring Diagram — 575-3-60 Unit Electro-Mechanical with POL224 Controller — Standard/Medium SCCR

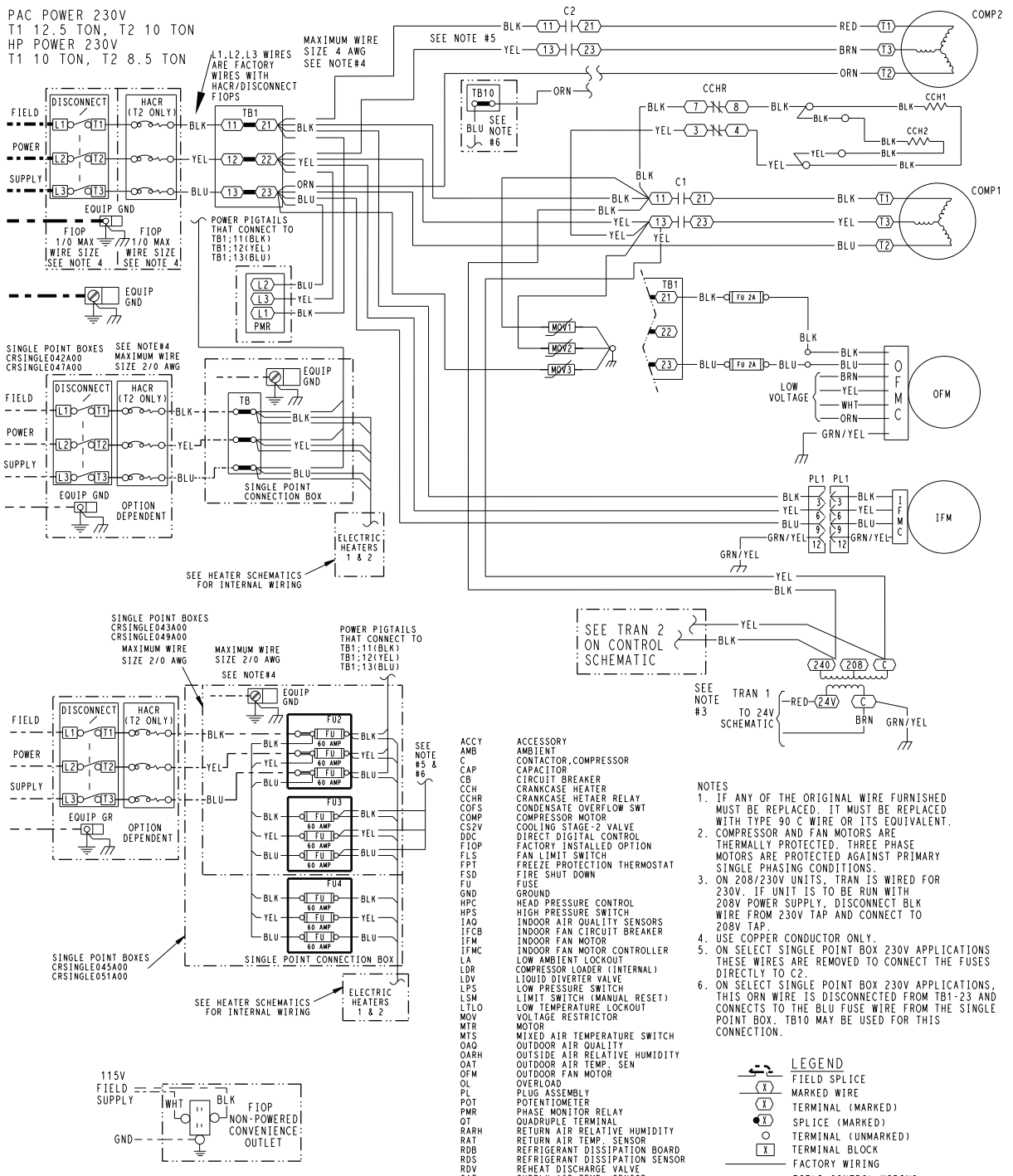

ACCY	ACCESSORY
AMB	AMBIENT
C	CONTACTOR,COMPRESSOR
CAP	CAPACITOR
CB	CIRCUIT BREAKER
CCH	CRANKCASE HEATER
CCHR	CRANKCASE HETAER RELAY
COFS	CONDENSATE OVERFLOW SWT
COMP	COMPRESSOR MOTOR
CS2V	COOLING STAGE-2 VALVE
DDC	DIRECT DIGITAL CONTROL
FIOP	FACTORY INSTALLED OPTION
FLS	FAN LIMIT SWITCH
FPT	FREEZE PROTECTION THERMOSTAT
FSD	FIRE SHUT DOWN
FU	FUSE
GND	GROUND
HPC	HEAD PRESSURE CONTROL
HPS	HIGH PRESSURE SWITCH
IAQ	INDOOR AIR QUALITY SENSORS
IFCB	INDOOR FAN CIRCUIT BREAKER
IFM	INDOOR FAN MOTOR
IFMC	INDOOR FAN MOTOR CONTROLLER
LA	LOW AMBIENT LOCKOUT
LDR	COMPRESSOR LOADER (INTERNAL)
LDV	LIQUID DIVERTER VALVE
LPS	LOW PRESSURE SWITCH
LSM	LIMIT SWITCH (MANUAL RESET)
LTLO	LOW TEMPERATURE LOCKOUT
MOV	VOLTAGE RESTRICTOR
MTR	MOTOR
MTS	MIXED AIR TEMPERATURE SWITCH
OAQ	OUTDOOR AIR QUALITY
OARH	OUTSIDE AIR RELATIVE HUMIDITY
OAT	OUTDOOR AIR TEMP. SEN
OFM	OUTDOOR FAN MOTOR
OL	OVERLOAD
PL	PLUG ASSEMBLY
POT	POTENTIOMETER
PMR	PHASE MONITOR RELAY
QT	QUADRUPLE TERMINAL
RARH	RETURN AIR RELATIVE HUMIDITY
RAT	RETURN AIR TEMP. SENSOR
RDB	REFRIGERANT DISSIPATION BOARD
RDS	REFRIGERANT DISSIPATION SENSOR
RDV	REHEAT DISCHARGE VALVE
SAT	SUPPLY AIR TEMP. SENSOR
SEN	SENSOR
SPRH	SPACE RELATIVE HUMIDITY
SPT	SPACE TEMPERATURE SENSOR
SPTO	SPACE TEMPERATURE OFFSET
STD	STANDARD
TB	TERMINAL BLOCK
TRAN	TRANSFORMER
UCB	UNIT CONTROL BOARD

NOTES
1. IF ANY OF THE ORIGINAL WIRE FURNISHED MUST BE REPLACED. IT MUST BE REPLACED WITH TYPE 90 C WIRE OR ITS EQUIVALENT.
2. COMPRESSOR AND FAN MOTORS ARE THERMALLY PROTECTED. THREE PHASE MOTORS ARE PROTECTED AGAINST PRIMARY SINGLE PHASING CONDITIONS.
3. ON 208/230V UNITS, TRAN IS WIRED FOR 230V. IF UNIT IS TO BE RUN WITH 208V POWER SUPPLY, DISCONNECT BLK WIRE FROM 230V TAP AND CONNECT TO 208V TAP.
4. USE COPPER CONDUCTOR ONLY.
5. ON SELECT SINGLE POINT BOX 230V APPLICATIONS THESE WIRES ARE REMOVED TO CONNECT THE FUSES DIRECTLY TO C2.
6. ON SELECT SINGLE POINT BOX 230V APPLICATIONS, THIS ORN WIRE IS DISCONNECTED FROM TB1-23 AND CONNECTS TO THE BLU FUSE WIRE FROM THE SINGLE POINT BOX. TB10 MAY BE USED FOR THIS CONNECTION.

LEGEND
- FIELD SPLICE
- MARKED WIRE
- TERMINAL (MARKED)
- SPLICE (MARKED)
- TERMINAL (UNMARKED)
- TERMINAL BLOCK
- FACTORY WIRING
- FIELD CONTROL WIRING
- FIELD POWER WIRING
- CIRCUIT BOARD TRACE
- ACCESSORY OR FIOP
- TO INDICATE COMMON POTENTIAL ONLY POTENTIAL ONLY: NOT TO REPRSENT WIRING

48TM005988 | E

Fig. G — 559K*14 Power Wiring Diagram — 208/230-3-60 Unit Electro-Mechanical with POL224 Controller — Standard/Medium SCCR

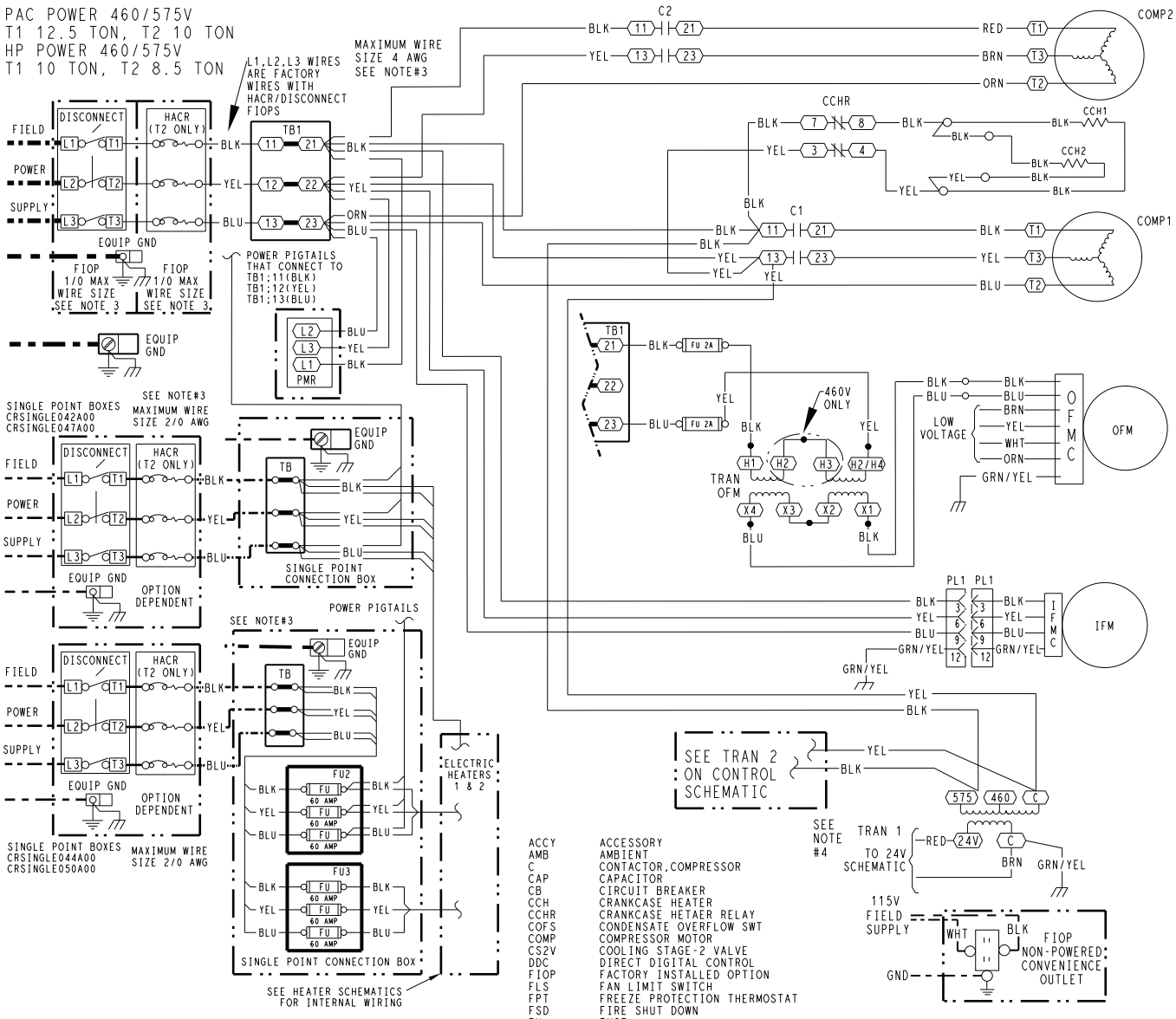

ACCY	ACCESSORY
AMB	AMBIENT
C	CONTACTOR,COMPRESSOR
CAP	CAPACITOR
CB	CIRCUIT BREAKER
CCH	CRANKCASE HEATER
CCHR	CRANKCASE HETAER RELAY
COFS	CONDENSATE OVERFLOW SWT
COMP	COMPRESSOR MOTOR
CS2V	COOLING STAGE-2 VALVE
DDC	DIRECT DIGITAL CONTROL
FIOP	FACTORY INSTALLED OPTION
FLS	FAN LIMIT SWITCH
FPT	FREEZE PROTECTION THERMOSTAT
FSD	FIRE SHUT DOWN
FU	FUSE
GND	GROUND
HPC	HEAD PRESSURE CONTROL
HPS	HIGH PRESSURE SWITCH
IAQ	INDOOR AIR QUALITY SENSORS
IFCB	INDOOR FAN CIRCUIT BREAKER
IFM	INDOOR FAN MOTOR
IFMC	INDOOR FAN MOTOR CONTROLLER
LA	LOW AMBIENT LOCKOUT
LDR	COMPRESSOR LOADER (INTERNAL)
LDV	LIQUID DIVERTER VALVE
LPS	LOW PRESSURE SWITCH
LSM	LIMIT SWITCH (MANUAL RESET)
LTLO	LOW TEMPERATURE LOCKOUT
MOV	VOLTAGE RESTRICTOR
MTR	MOTOR
MTS	MIXED AIR TEMPERATURE SWITCH
OAQ	OUTDOOR AIR QUALITY
OARH	OUTSIDE AIR RELATIVE HUMIDITY
OAT	OUTDOOR AIR TEMP. SEN
OFM	OUTDOOR FAN MOTOR
OL	OVERLOAD
PL	PLUG ASSEMBLY
POT	POTENTIOMETER
PMR	PHASE MONITOR RELAY
QT	QUADRUPLE TERMINAL
RARH	RETURN AIR RELATIVE HUMIDITY
RAT	RETURN AIR TEMP. SENSOR
RDV	REHEAT DISCHARGE VALVE
SAT	SUPPLY AIR TEMP. SENSOR
SEN	SENSOR
SPRH	SPACE RELATIVE HUMIDITY
SPT	SPACE TEMPERATURE SENSOR
SPTO	SPACE TEMPERATURE OFFSET
STD	STANDARD
TB	TERMINAL BLOCK
TRAN	TRANSFORMER
UCB	UNIT CONTROL BOARD

NOTES
1. IF ANY OF THE ORIGINAL WIRE FURNISHED MUST BE REPLACED. IT MUST BE REPLACED WITH TYPE 90 C WIRE OR ITS EQUIVALENT.
2. COMPRESSOR AND FAN MOTORS ARE THERMALLY PROTECTED. THREE PHASE MOTORS ARE PROTECTED AGAINST PRIMARY SINGLE PHASING CONDITIONS.
3. USE COPPER CONDUCTOR ONLY.
4. TRANSFORMER IS DEDICATED BASED ON UNIT VOLTAGE. TAPS ONLY SHOWN TO SIMPLIFY SCHEMATIC.

LEGEND

	FIELD SPLICE
X	MARKED WIRE
X	TERMINAL (MARKED)
X	SPLICE (MARKED)
	TERMINAL (UNMARKED)
X	TERMINAL BLOCK
	FACTORY WIRING
	FIELD CONTROL WIRING
	FIELD POWER WIRING
	CIRCUIT BOARD TRACE
	ACCESSORY OR FIOP
	TO INDICATE COMMON POTENTIAL ONLY POTENTIAL ONLY: NOT TO REPRSENT WIRING

48TM005987 D

Fig. H — 559K*14 Power Wiring Diagram — 460, 575-3-60 Unit Electro-Mechanical with POL224 Controller — Standard/Medium SCCR

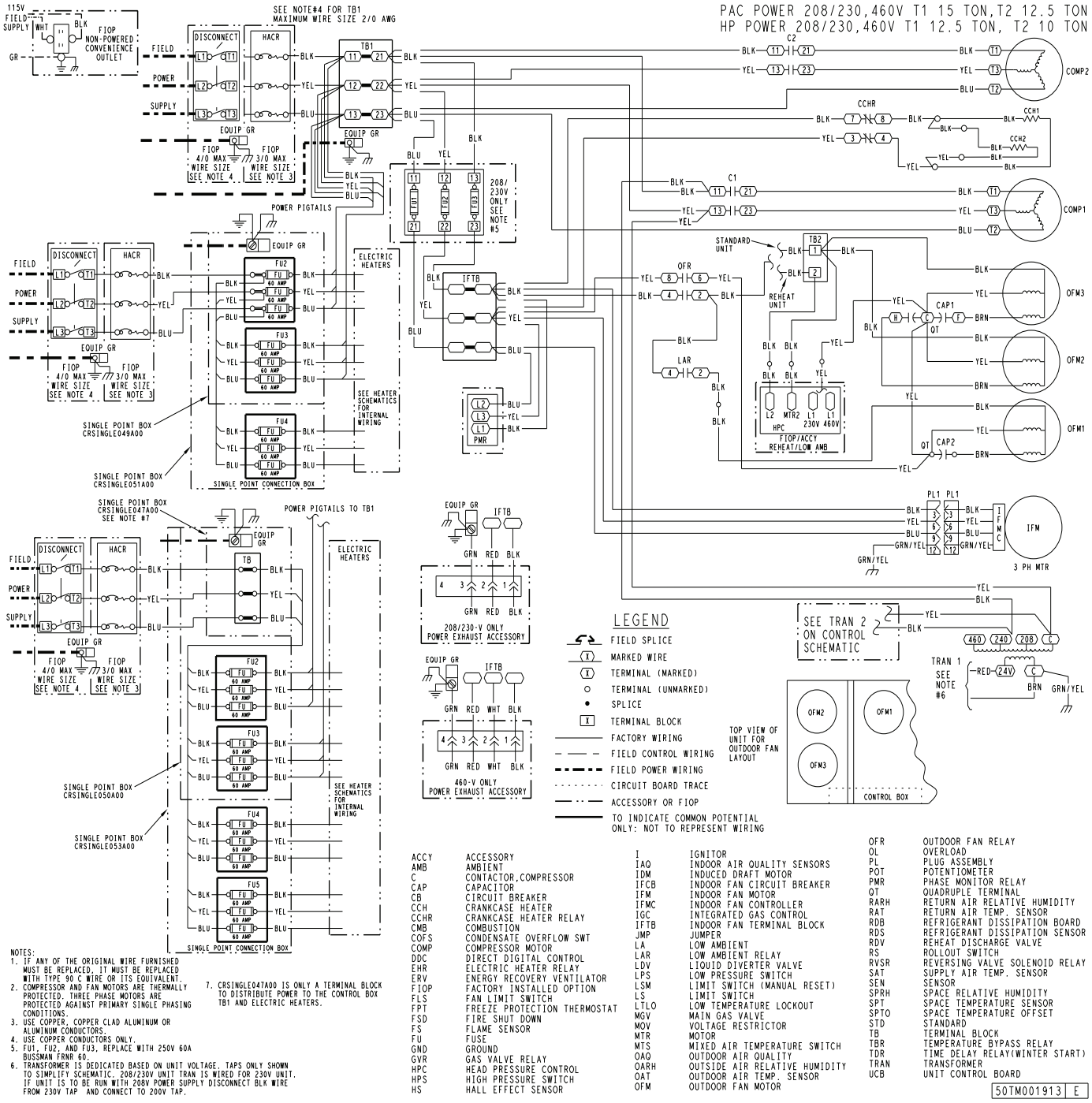

Fig. I — 559K*16 Power Wiring Diagram — 208/230, 460-3-60 Unit Electro-Mechanical with POL224 Controller — Standard/Medium SCCR

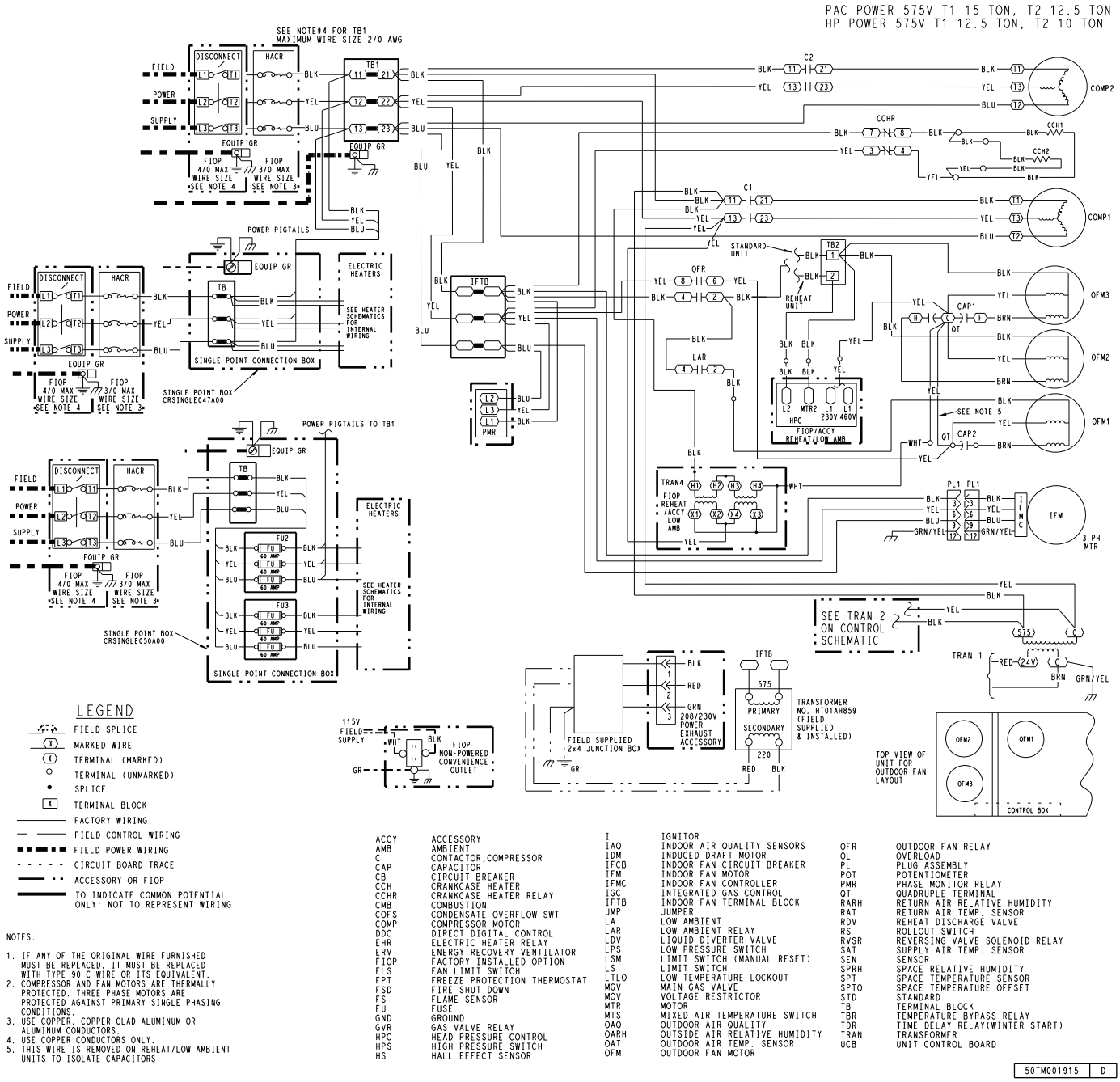

Fig. J — 559K*16 Power Wiring Diagram — 575-3-60 Unit Electro-Mechanical with POL224 Controller — Standard/Medium SCCR

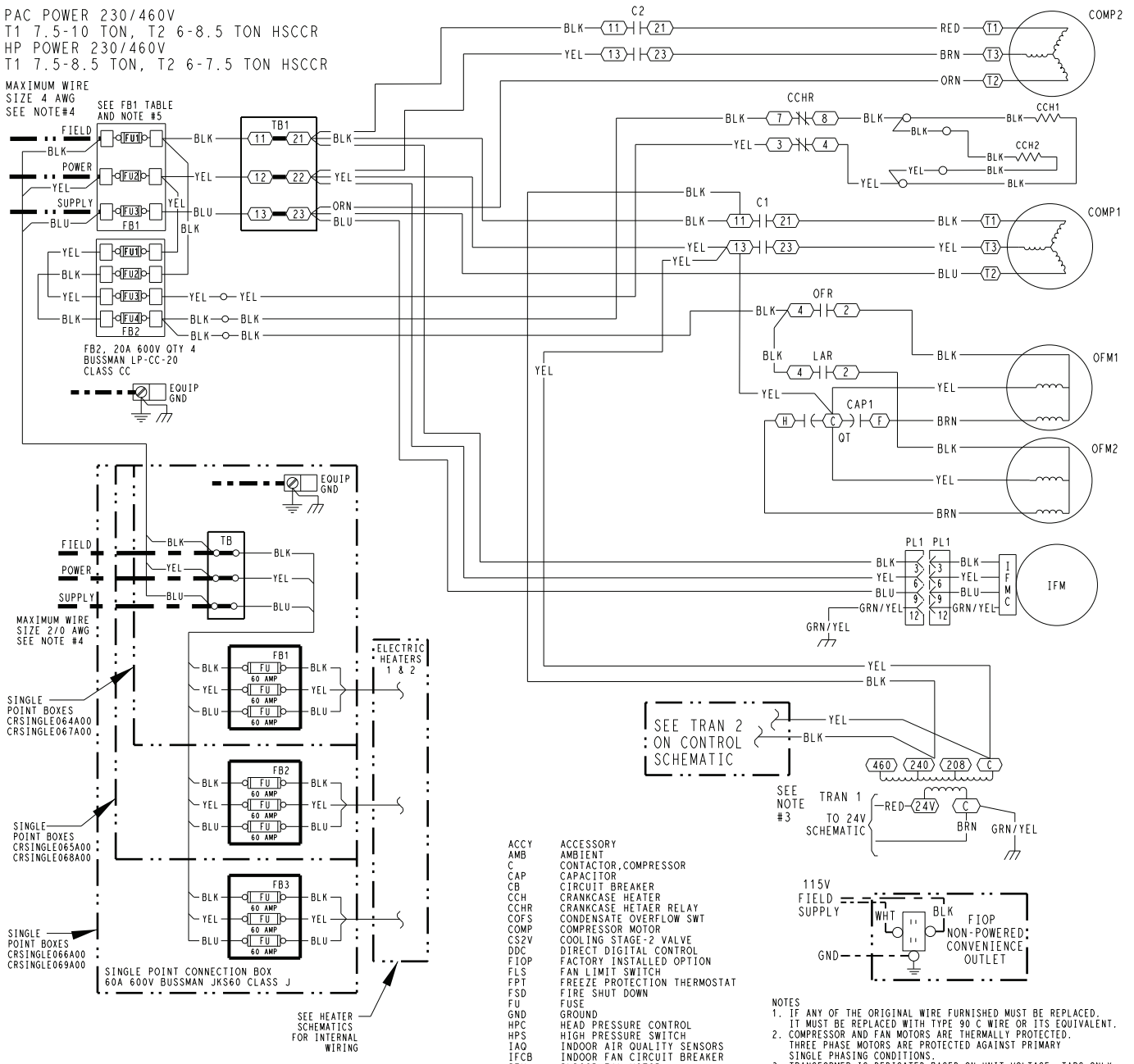

FB1 TABLE
THE FB1 WILL CONTAIN ONE OF FUSE COMBINATIONS BELOW
80A 600V QTY 3 BUSSMANN TCF80RN CLASS J
60A 600V QTY 3 BUSSMANN TCF60RN CLASS J
30A 600V QTY 3 BUSSMANN LP-CC-30 CLASS CC

ACCY	ACCESSORY
AMB	AMBIENT
C	CONTACTOR,COMPRESSOR
CAP	CAPACITOR
CB	CIRCUIT BREAKER
CCH	CRANKCASE HEATER
CCHR	CRANKCASE HETAER RELAY
COFS	CONDENSATE OVERFLOW SWT
COMP	COMPRESSOR MOTOR
CS2V	COOLING STAGE-2 VALVE
DDC	DIRECT DIGITAL CONTROL
FIOP	FACTORY INSTALLED OPTION
FLS	FAN LIMIT SWITCH
FPT	FREEZE PROTECTION THERMOSTAT
FSD	FIRE SHUT DOWN
FU	FUSE
GND	GROUND
HPC	HEAD PRESSURE CONTROL
HPS	HIGH PRESSURE SWITCH
IAQ	INDOOR AIR QUALITY SENSORS
IFCB	INDOOR FAN CIRCUIT BREAKER
IFM	INDOOR FAN MOTOR
IFMC	INDOOR FAN MOTOR CONTROLLER
LA	LOW AMBIENT LOCKOUT
LAR	LOW AMBIENT RELAY
LDR	COMPRESSOR LOADER (INTERNAL)
LDV	LIQUID DIVERTER VALVE
LPS	LOW PRESSURE SWITCH
LSM	LIMIT SWITCH (MANUAL RESET)
LTLO	LOW TEMPERATURE LOCKOUT
MOV	VOLTAGE RESTRICTOR
MTR	MOTOR
MTS	MIXED AIR TEMPERATURE SWITCH
OAQ	OUTDOOR AIR QUALITY
OARH	OUTSIDE AIR RELATIVE HUMIDITY
OAT	OUTDOOR AIR TEMP. SEN
OFM	OUTDOOR FAN MOTOR
OL	OVERLOAD
PL	PLUG ASSEMBLY
POT	POTENTIOMETER
PMR	PHASE MONITOR RELAY
QT	QUADRUPLE TERMINAL
RARH	RETURN AIR RELATIVE HUMIDITY
RAT	RETURN AIR TEMP. SENSOR
RDV	REHEAT DISCHARGE VALVE
SAT	SUPPLY AIR TEMP. SENSOR
SEN	SENSOR
SPRH	SPACE RELATIVE HUMIDITY
SPT	SPACE TEMPERATURE SENSOR
SPTO	SPACE TEMPERATURE OFFSET
STD	STANDARD
TB	TERMINAL BLOCK
TRAN	TRANSFORMER
UCB	UNIT CONTROL BOARD

NOTES
1. IF ANY OF THE ORIGINAL WIRE FURNISHED MUST BE REPLACED. IT MUST BE REPLACED WITH TYPE 90 C WIRE OR ITS EQUIVALENT.
2. COMPRESSOR AND FAN MOTORS ARE THERMALLY PROTECTED. THREE PHASE MOTORS ARE PROTECTED AGAINST PRIMARY SINGLE PHASING CONDITIONS.
3. TRANSFORMER IS DEDICATED BASED ON UNIT VOLTAGE. TAPS ONLY SHOWN TO SIMPLIFY SCHEMATIC.ON 208/230V UNITS, TRAN IS WIRED FOR 230V. IF UNIT IS TO BE RUN WITH 208V POWER SUPPLY, DISCONNECT BLK WIRE FROM 230V TAP AND CONNECT TO 208V TAP.
4. USE COPPER CONDUCTOR ONLY.
5. ON 80A FUSE UNITS ONLY, THERE WILL BE AN EXTRA TERMINAL BLOCK BETWEEN FB1 AND TB1.

LEGEND

	FIELD SPLICE
(X)	MARKED WIRE
(X)	TERMINAL (MARKED)
(X)	SPLICE (MARKED)
○	TERMINAL (UNMARKED)
[X]	TERMINAL BLOCK
———	FACTORY WIRING
— —— —	FIELD CONTROL WIRING
- - - - - -	FIELD POWER WIRING
- - - - - - -	CIRCUIT BOARD TRACE
—— · · ——	ACCESSORY OR FIOP
═══	TO INDICATE COMMON POTENTIAL ONLY POTENTIAL ONLY: NOT TO REPRSENT WIRING

48TM008023 | B

Fig. K — 559K*08-12 Control Wiring Diagram — 208/230, 460-3-60 Unit Electro-Mechanical with POL224 Controller — High SCCR

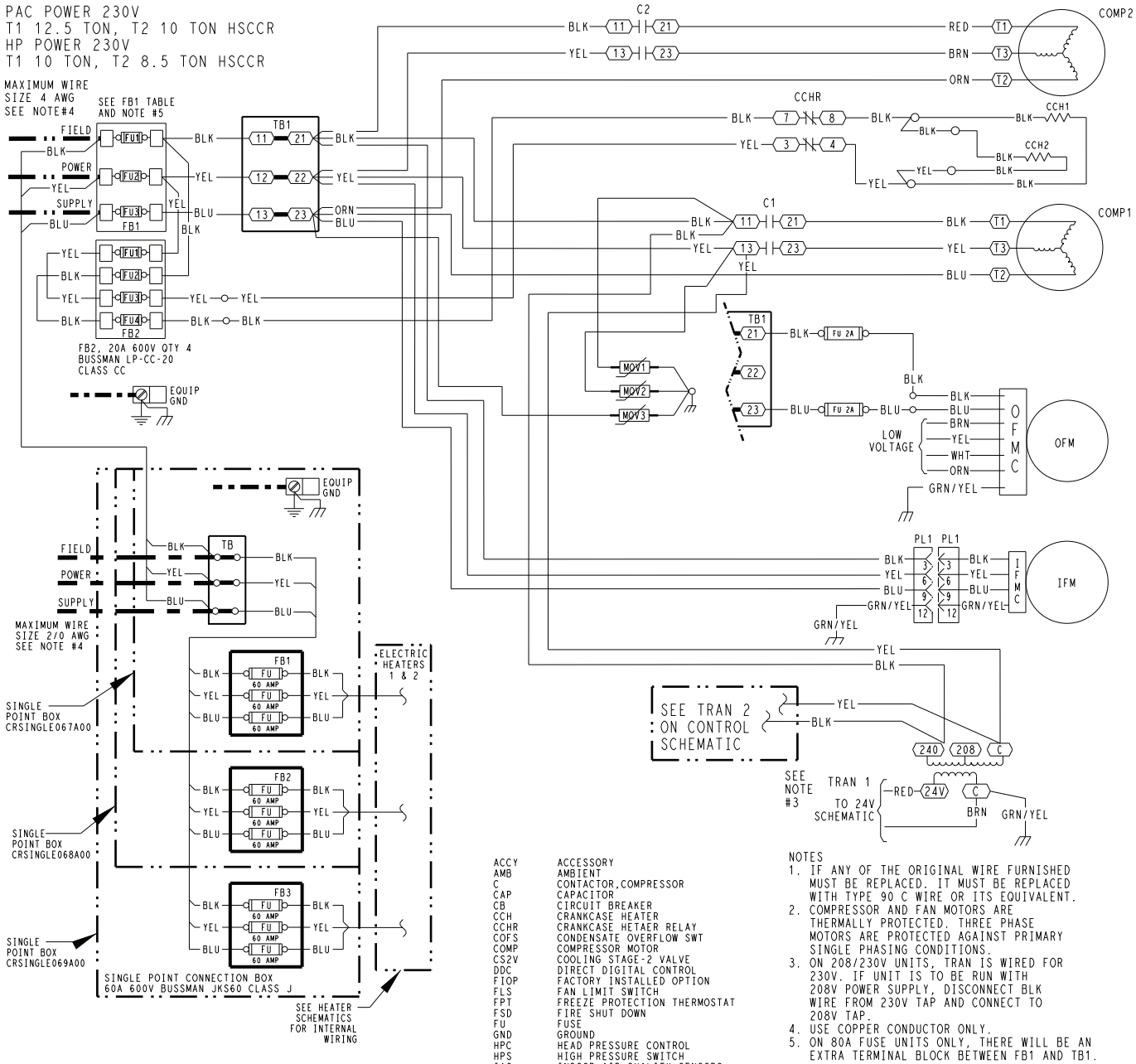

FB1 TABLE
THE FB1 WILL CONTAIN ONE OF FUSE COMBINATIONS BELOW
80A 600V QTY 3 BUSSMANN TCF80RN CLASS J
60A 600V QTY 3 BUSSMANN TCF60RN CLASS J
30A 600V QTY 3 BUSSMANN LP-CC-30 CLASS CC

ACCY	ACCESSORY
AMB	AMBIENT
C	CONTACTOR,COMPRESSOR
CAP	CAPACITOR
CB	CIRCUIT BREAKER
CCH	CRANKCASE HEATER
CCHR	CRANKCASE HETAER RELAY
COFS	CONDENSATE OVERFLOW SWT
COMP	COMPRESSOR MOTOR
CS2V	COOLING STAGE-2 VALVE
DDC	DIRECT DIGITAL CONTROL
FIOP	FACTORY INSTALLED OPTION
FLS	FAN LIMIT SWITCH
FPT	FREEZE PROTECTION THERMOSTAT
FSD	FIRE SHUT DOWN
FU	FUSE
GND	GROUND
HPC	HEAD PRESSURE CONTROL
HPS	HIGH PRESSURE SWITCH
IAQ	INDOOR AIR QUALITY SENSORS
IFCB	INDOOR FAN CIRCUIT BREAKER
IFM	INDOOR FAN MOTOR
IFMC	INDOOR FAN MOTOR CONTROLLER
LA	LOW AMBIENT LOCKOUT
LDR	COMPRESSOR LOADER (INTERNAL)
LDV	LIQUID DIVERTER VALVE
LPS	LOW PRESSURE SWITCH
LSM	LIMIT SWITCH (MANUAL RESET)
LTLO	LOW TEMPERATURE LOCKOUT
MOV	VOLTAGE RESTRICTOR
MTR	MOTOR
MTS	MIXED AIR TEMPERATURE SWITCH
OAQ	OUTDOOR AIR QUALITY
OARH	OUTSIDE AIR RELATIVE HUMIDITY
OAT	OUTDOOR AIR TEMP. SEN
OFM	OUTDOOR FAN MOTOR
OL	OVERLOAD
PL	PLUG ASSEMBLY
POT	POTENTIOMETER
PMR	PHASE MONITOR RELAY
QT	QUADRUPLE TERMINAL
RARH	RETURN AIR RELATIVE HUMIDITY
RAT	RETURN AIR TEMP. SENSOR
RDV	REHEAT DISCHARGE VALVE
SAT	SUPPLY AIR TEMP. SENSOR
SEN	SENSOR
SPRH	SPACE RELATIVE HUMIDITY
SPT	SPACE TEMPERATURE SENSOR
SPTO	SPACE TEMPERATURE OFFSET
STD	STANDARD
TB	TERMINAL BLOCK
TRAN	TRANSFORMER
UCB	UNIT CONTROL BOARD

NOTES
1. IF ANY OF THE ORIGINAL WIRE FURNISHED MUST BE REPLACED. IT MUST BE REPLACED WITH TYPE 90 C WIRE OR ITS EQUIVALENT.
2. COMPRESSOR AND FAN MOTORS ARE THERMALLY PROTECTED. THREE PHASE MOTORS ARE PROTECTED AGAINST PRIMARY SINGLE PHASING CONDITIONS.
3. ON 208/230V UNITS, TRAN IS WIRED FOR 230V. IF UNIT IS TO BE RUN WITH 208V POWER SUPPLY, DISCONNECT BLK WIRE FROM 230V TAP AND CONNECT TO 208V TAP.
4. USE COPPER CONDUCTOR ONLY.
5. ON 80A FUSE UNITS ONLY, THERE WILL BE AN EXTRA TERMINAL BLOCK BETWEEN FB1 AND TB1.

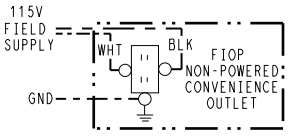

LEGEND

	FIELD SPLICE
(X)	MARKED WIRE
(X)	TERMINAL (MARKED)
(X)	SPLICE (MARKED)
○	TERMINAL (UNMARKED)
[X]	TERMINAL BLOCK
———	FACTORY WIRING
— —— —	FIELD CONTROL WIRING
- - - -	FIELD POWER WIRING
- - - - - - -	CIRCUIT BOARD TRACE
— · · —	ACCESSORY OR FIOP
▬▬▬	TO INDICATE COMMON POTENTIAL ONLY POTENTIAL ONLY: NOT TO REPRSENT WIRING

48TM008025 | B

Fig. L — 559K*14 Control Wiring Diagram — 208/230-3-60 Unit Electro-Mechanical with POL224 Controller — High SCCR

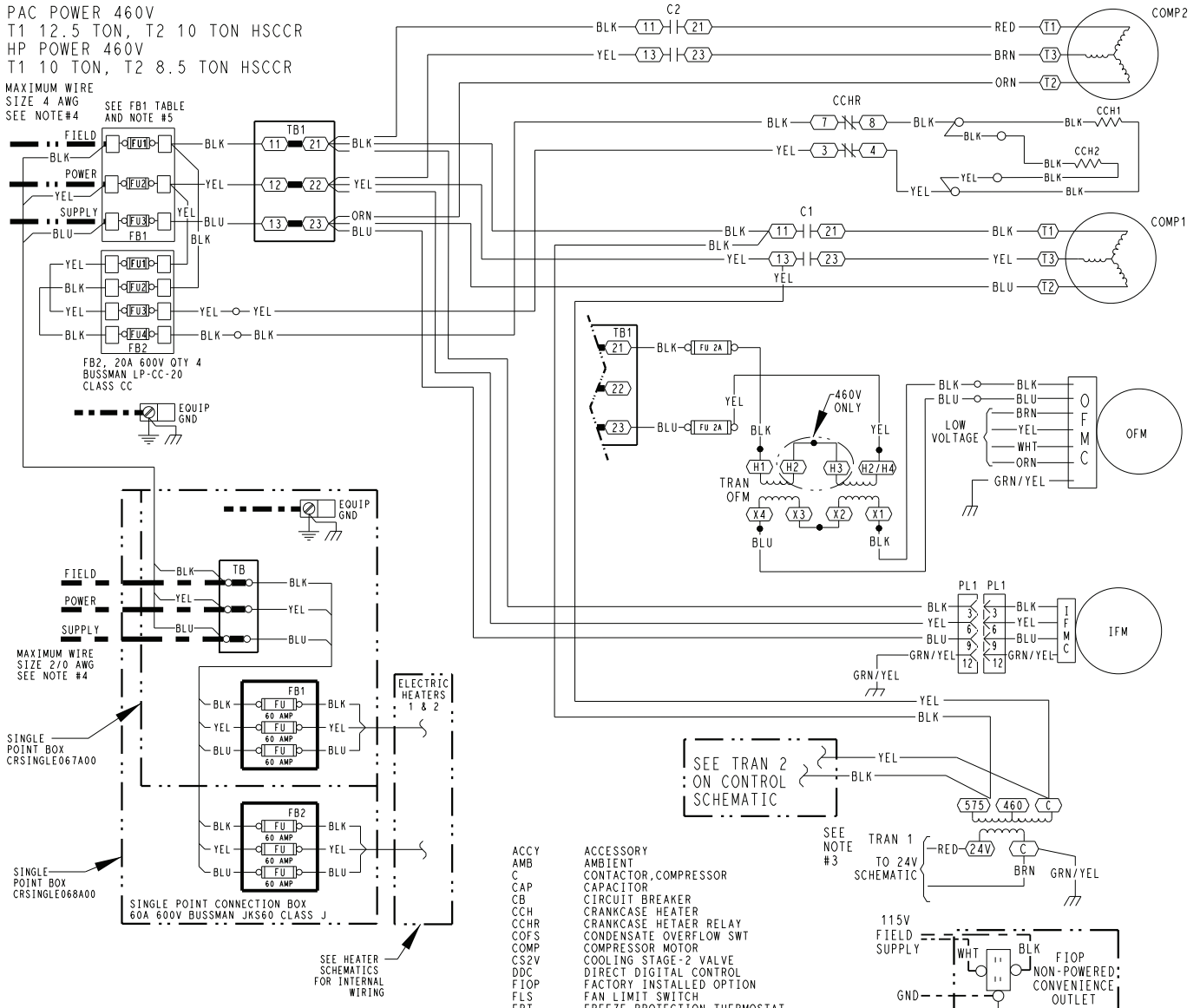

FB1 TABLE
THE FB1 WILL CONTAIN ONE OF FUSE COMBINATIONS BELOW
80A 600V QTY 3 BUSSMANN TCF80RN CLASS J
60A 600V QTY 3 BUSSMANN TCF60RN CLASS J
30A 600V QTY 3 BUSSMANN LP-CC-30 CLASS CC

ACCY	ACCESSORY
AMB	AMBIENT
C	CONTACTOR,COMPRESSOR
CAP	CAPACITOR
CB	CIRCUIT BREAKER
CCH	CRANKCASE HEATER
CCHR	CRANKCASE HETAER RELAY
COFS	CONDENSATE OVERFLOW SWT
COMP	COMPRESSOR MOTOR
CS2V	COOLING STAGE-2 VALVE
DDC	DIRECT DIGITAL CONTROL
FIOP	FACTORY INSTALLED OPTION
FLS	FAN LIMIT SWITCH
FPT	FREEZE PROTECTION THERMOSTAT
FSD	FIRE SHUT DOWN
FU	FUSE
GND	GROUND
HPC	HEAD PRESSURE CONTROL
HPS	HIGH PRESSURE SWITCH
IAQ	INDOOR AIR QUALITY SENSORS
IFCB	INDOOR FAN CIRCUIT BREAKER
IFM	INDOOR FAN MOTOR
IFMC	INDOOR FAN MOTOR CONTROLLER
LA	LOW AMBIENT LOCKOUT
LDR	COMPRESSOR LOADER (INTERNAL)
LDV	LIQUID DIVERTER VALVE
LPS	LOW PRESSURE SWITCH
LSM	LIMIT SWITCH (MANUAL RESET)
LTLO	LOW TEMPERATURE LOCKOUT
MOV	VOLTAGE RESTRICTOR
MTR	MOTOR
MTS	MIXED AIR TEMPERATURE SWITCH
OAQ	OUTDOOR AIR QUALITY
OARH	OUTSIDE AIR RELATIVE HUMIDITY
OAT	OUTDOOR AIR TEMP. SEN
OFM	OUTDOOR FAN MOTOR
OL	OVERLOAD
PL	PLUG ASSEMBLY
POT	POTENTIOMETER
PMR	PHASE MONITOR RELAY
QT	QUADRUPLE TERMINAL
RARH	RETURN AIR RELATIVE HUMIDITY
RAT	RETURN AIR TEMP. SENSOR
RDV	REHEAT DISCHARGE VALVE
SAT	SUPPLY AIR TEMP. SENSOR
SEN	SENSOR
SPRH	SPACE RELATIVE HUMIDITY
SPT	SPACE TEMPERATURE SENSOR
SPTO	SPACE TEMPERATURE OFFSET
STD	STANDARD
TB	TERMINAL BLOCK
TRAN	TRANSFORMER
UCB	UNIT CONTROL BOARD

NOTES
1. IF ANY OF THE ORIGINAL WIRE FURNISHED MUST BE REPLACED. IT MUST BE REPLACED WITH TYPE 90 C WIRE OR ITS EQUIVALENT.
2. COMPRESSOR AND FAN MOTORS ARE THERMALLY PROTECTED. THREE PHASE MOTORS ARE PROTECTED AGAINST PRIMARY SINGLE PHASING CONDITIONS.
3. TRANSFORMER IS DEDICATED BASED ON UNIT VOLTAGE. TAPS ONLY SHOWN TO SIMPLIFY SCHEMATIC.
4. USE COPPER CONDUCTOR ONLY.
5. ON 80A FUSE UNITS ONLY, THERE WILL BE AN EXTRA TERMINAL BLOCK BETWEEN FB1 AND TB1.

LEGEND

	FIELD SPLICE
(X)	MARKED WIRE
(X)	TERMINAL (MARKED)
(X)	SPLICE (MARKED)
○	TERMINAL (UNMARKED)
[X]	TERMINAL BLOCK
———	FACTORY WIRING
— —— —	FIELD CONTROL WIRING
- - - - -	FIELD POWER WIRING
- - - - - - -	CIRCUIT BOARD TRACE
—— · · ——	ACCESSORY OR FIOP
———	TO INDICATE COMMON POTENTIAL ONLY POTENTIAL ONLY: NOT TO REPRSENT WIRING

48TM008026 | B

Fig. M — 559K*14 Control Wiring Diagram — 460-3-60 Unit Electro-Mechanical with POL224 Controller — High SCCR

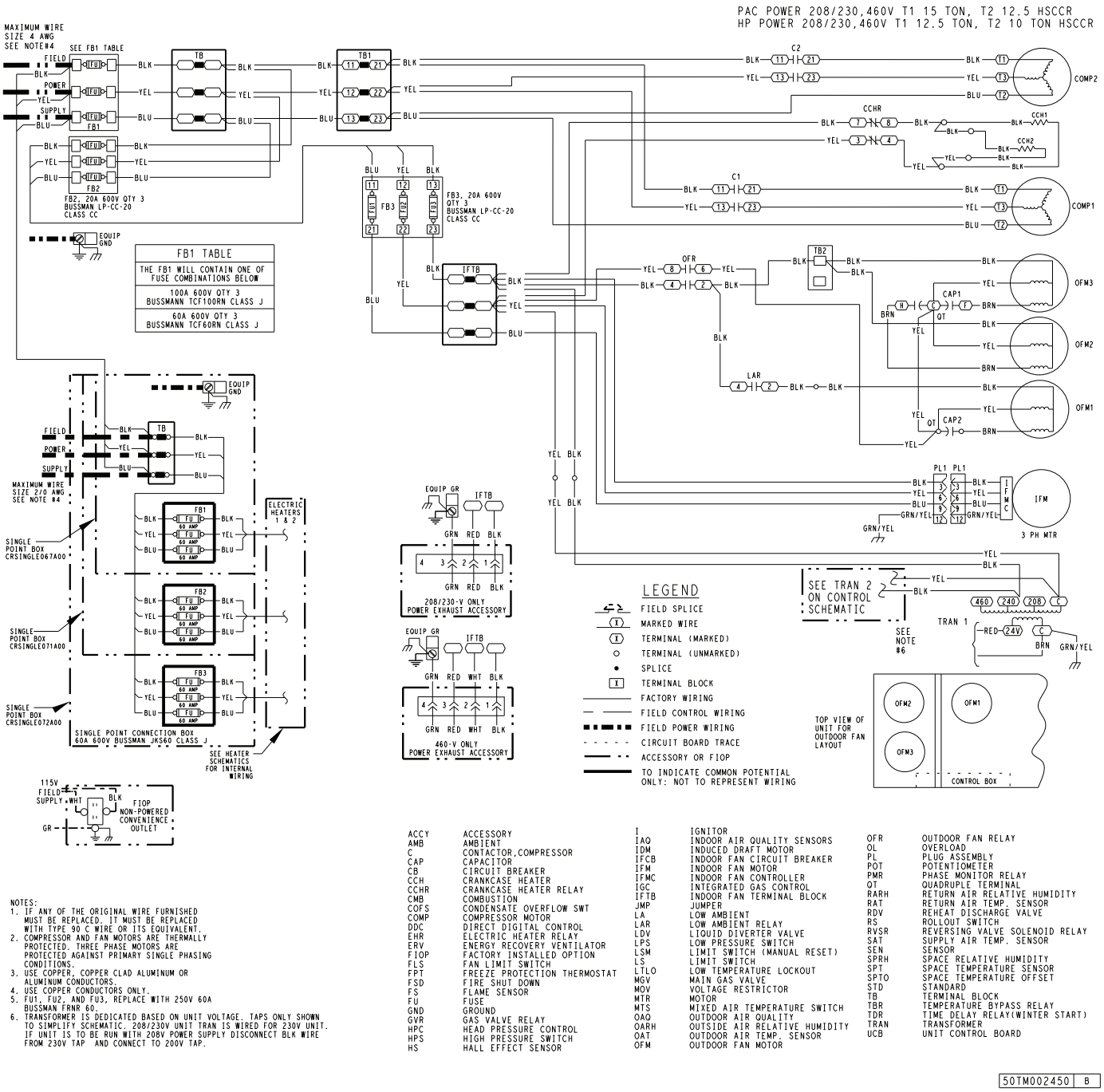

NOTES:
1. IF ANY OF THE ORIGINAL WIRE FURNISHED MUST BE REPLACED, IT MUST BE REPLACED WITH TYPE 90 C WIRE OR ITS EQUIVALENT.
2. COMPRESSOR AND FAN MOTORS ARE THERMALLY PROTECTED. THREE PHASE MOTORS ARE PROTECTED AGAINST PRIMARY SINGLE PHASING CONDITIONS.
3. USE COPPER, COPPER CLAD ALUMINUM OR ALUMINUM CONDUCTORS.
4. USE COPPER CONDUCTORS ONLY.
5. FU1, FU2, AND FU3, REPLACE WITH 250V 60A BUSSMAN FRNR 60.
6. TRANSFORMER IS DEDICATED BASED ON UNIT VOLTAGE. TAPS ONLY SHOWN TO SIMPLIFY SCHEMATIC. 208/230V UNIT TRAN IS WIRED FOR 230V UNIT. IF UNIT IS TO BE RUN WITH 208V POWER SUPPLY DISCONNECT BLK WIRE FROM 230V TAP AND CONNECT TO 200V TAP.

ACCY	ACCESSORY
AMB	AMBIENT
C	CONTACTOR,COMPRESSOR
CAP	CAPACITOR
CB	CIRCUIT BREAKER
CCH	CRANKCASE HEATER
CCHR	CRANKCASE HEATER RELAY
CMB	COMBUSTION
COFS	CONDENSATE OVERFLOW SWT
COMP	COMPRESSOR MOTOR
DDC	DIRECT DIGITAL CONTROL
EHR	ELECTRIC HEATER RELAY
ERV	ENERGY RECOVERY VENTILATOR
FIOP	FACTORY INSTALLED OPTION
FLS	FAN LIMIT SWITCH
FPT	FREEZE PROTECTION THERMOSTAT
FSD	FIRE SHUT DOWN
FS	FLAME SENSOR
FU	FUSE
GND	GROUND
GVR	GAS VALVE RELAY
HPC	HEAD PRESSURE CONTROL
HPS	HIGH PRESSURE SWITCH
HS	HALL EFFECT SENSOR
I	IGNITOR
IAQ	INDOOR AIR QUALITY SENSORS
IDM	INDUCED DRAFT MOTOR
IFCB	INDOOR FAN CIRCUIT BREAKER
IFM	INDOOR FAN MOTOR
IFMC	INDOOR FAN CONTROLLER
IGC	INTEGRATED GAS CONTROL
IFTB	INDOOR FAN TERMINAL BLOCK
JMP	JUMPER
LA	LOW AMBIENT
LAR	LOW AMBIENT RELAY
LDV	LIQUID DIVERTER VALVE
LPS	LOW PRESSURE SWITCH
LSM	LIMIT SWITCH (MANUAL RESET)
LS	LIMIT SWITCH
LTLO	LOW TEMPERATURE LOCKOUT
MGV	MAIN GAS VALVE
MOV	VOLTAGE RESTRICTOR
MTR	MOTOR
MTS	MIXED AIR TEMPERATURE SWITCH
OAQ	OUTDOOR AIR QUALITY
OARH	OUTSIDE AIR RELATIVE HUMIDITY
OAT	OUTDOOR AIR TEMP. SENSOR
OFM	OUTDOOR FAN MOTOR
OFR	OUTDOOR FAN RELAY
OL	OVERLOAD
PL	PLUG ASSEMBLY
POT	POTENTIOMETER
PMR	PHASE MONITOR RELAY
QT	QUADRUPLE TERMINAL
RARH	RETURN AIR RELATIVE HUMIDITY
RAT	RETURN AIR TEMP. SENSOR
RDV	REHEAT DISCHARGE VALVE
RS	ROLLOUT SWITCH
RVSR	REVERSING VALVE SOLENOID RELAY
SAT	SUPPLY AIR TEMP. SENSOR
SEN	SENSOR
SPRH	SPACE RELATIVE HUMIDITY
SPT	SPACE TEMPERATURE SENSOR
SPTO	SPACE TEMPERATURE OFFSET
STD	STANDARD
TB	TERMINAL BLOCK
TBR	TEMPERATURE BYPASS RELAY
TDR	TIME DELAY RELAY(WINTER START)
TRAN	TRANSFORMER
UCB	UNIT CONTROL BOARD

Fig. N — 559K*16 Control Wiring Diagram — 208/230, 460-3-60 Unit Electro-Mechanical with POL224 Controller — High SCCR

APPENDIX E — LOW AMBIENT CONTROL SENSOR LOCATION

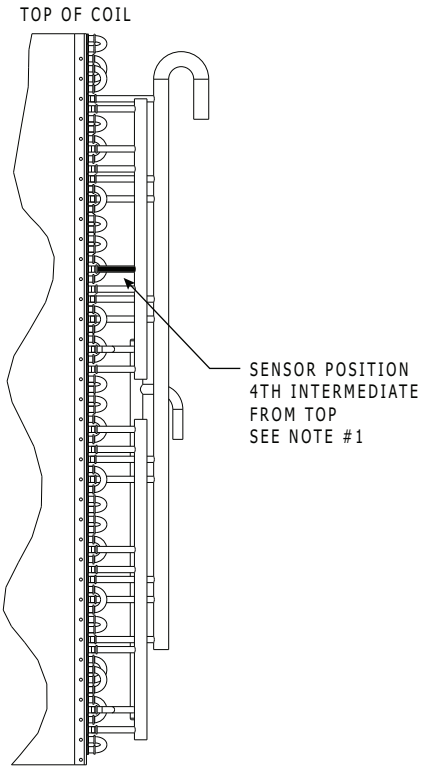

7.5 Ton Outdoor Circuiting

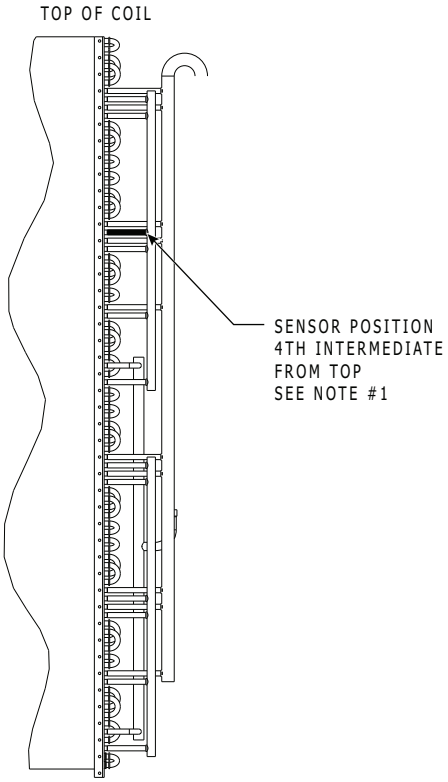

8.5 Ton to 10.0 Ton Outdoor Circuiting

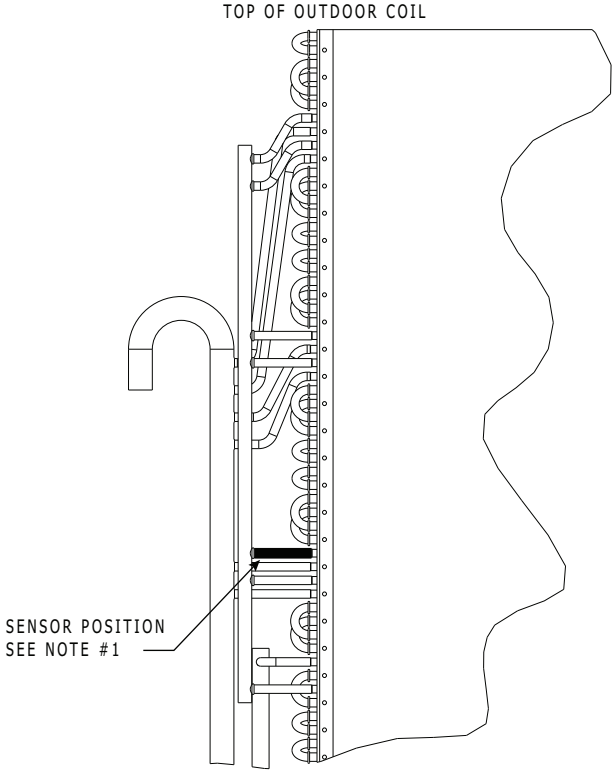

15.0 Ton Outdoor Circuiting

NOTE(S):

1. Apply conductive grease supplied with coil sensor (item #1) on specified leg before attaching sensor to location with wire tie (item #5).
2. Not available for 12.5 ton unit. That unit uses an ECM motor control.

Fig. O — 559K*08-16 Outdoor Circuiting

© 2024 Carrier

START-UP CHECKLIST

559K*08-16 Single Package Rooftop Electric Cooling Units

(Remove and use for job file)

NOTE: To avoid injury to personnel and damage to equipment or property when completing the procedures listed in this start-up checklist, use good judgment, follow safe practices, and adhere to the safety considerations/information as outlined in preceding sections of this Service Manual document.

I. PRELIMINARY INFORMATION

MODEL NO. _____
JOB NAME _____
SERIAL NO._____
ADDRESS _____
START-UP DATE _____
TECHNICIAN NAME_____
ADDITIONAL ACCESSORIES _____
_____

II. PRE-START-UP

Verify that all packaging materials have been removed from unit	(Y/N) _____
Verify installation of outdoor air hood	(Y/N) _____
Verify that condensate connection is installed per instructions	(Y/N) _____
Verify that all electrical connections and terminals are tight	(Y/N) _____
Check that indoor-air filters are clean and in place	(Y/N) _____
Check that outdoor air inlet screens are in place	(Y/N) _____
Verify that unit is level	(Y/N) _____
Verify that fan assembly is free of obstructions and rotor spins freely	(Y/N) _____
Verify that scroll compressors are rotating in the correct direction	(Y/N) _____
Verify installation of thermostat	(Y/N) _____

III. START-UP

ELECTRICAL

Supply Voltage	L1-L2_____	L2-L3_____	L3-L1_____
Supply Voltage to Ground	L1 to Ground _____	L2 to Ground _____	L3 to Ground _____
Compressor Amps 1	L1 _____	L2 _____	L3 _____
Compressor Amps 2	L1 _____	L2 _____	L3 _____
Supply Fan Amps	L1 _____	L2 _____	L3 _____

TEMPERATURES

Outdoor-air Temperature	_____ °F DB (Dry Bulb)	
Return-air Temperature	_____ °F DB	_____ °F WB (Wet Bulb)
Cooling Supply Air Temperature	_____ °F	

PRESSURES

Refrigerant Suction	STAGE 1 _____ PSIG	
	STAGE 2 _____ PSIG	
Refrigerant Discharge	STAGE 1 _____ PSIG	
	STAGE 2 _____ PSIG	
Verify Refrigerant Charge using Charging Charts		(Y/N) _____

GENERAL

Economizer minimum vent and changeover settings to job requirements (if equipped) (Y/N) _____

Verify smoke detector unit shutdown by utilizing magnet test (Y/N) _____

IV. PERFECT HUMIDITY™ SYSTEM START-UP

STEPS

1. Check UCB (Unit Control Board) for jumper 1, 2, 3 (Jumper 1, 2, 3 must be cut and open) (Y/N) _____
2. Open humidistat contacts (Y/N) _____
3. Start unit In cooling (Close Y1) (Y/N) _____

OBSERVE AND RECORD

a. Suction pressure _____ PSIG
b. Discharge pressure _____ PSIG
c. Entering air temperature _____ °F
d. Liquid line temperature at outlet or reheat coil _____ °F
e. Confirm correct rotation for compressor (Y/N) _____
f. Check for correct ramp-up of outdoor fan motor as condenser coil warms (Y/N) _____

4. Switch unit to high-latent mode (sub-cooler) by closing humidistat with Y1 closed (Y/N) _____
5. Check unit charge per charging chart (Y/N) _____

OBSERVE

a. Reduction in suction pressure (5 to 7 psi expected) (Y/N) _____
b. Discharge pressure unchanged (Y/N) _____
c. Liquid temperature drops to 50°F to 55°F range (Y/N) _____
d. LSV solenoid energized (valve closes) (Y/N) _____

6. Switch unit to dehumid (reheat) by opening Y1 (Y/N) _____

OBSERVE

a. Suction pressure increases to normal cooling level (Y/N) _____
b. Discharge pressure decreases (35 to 50 psi) (Limited by head pressure control) (Y/N) _____
c. Liquid temperature returns to normal cooling level (Y/N) _____
d. LSV solenoid energized (valve closes) (Y/N) _____
e. DSV solenoid energized, valve opens (Y/N) _____

7. With unit in dehumid mode close W1 compressor and outdoor fan stop; LSV and DSV solenoids de-energized (Y/N) _____
8. Open W1 restore unit to dehumid mode (Y/N) _____
9. Open humidistat input compressor and outdoor fan stop; LSV and DSV solenoids de-energized (Y/N) _____
10. Restore setpoints for thermostat and humidistat (Y/N) _____

CUT ALONG DOTTED LINE

CUT ALONG DOTTED LINE

© 2024 Carrier