48JC(G/H)*04-06 Single Package Rooftop Ultra Low NOx (14 ng/J) Gas Heat/Electric Cooling Unit with Puron® (R-410A) Refrigerant 3 to 5 Nominal Tons

Service and Maintenance Instructions

CONTENTS

Page

SAFETY CONSIDERATIONS 2
UNIT ARRANGEMENT AND ACCESS 3
General 3
Routine Maintenance 3
Filters 3
SUPPLY FAN (BLOWER) SECTION 4
Supply Fan (Direct-Drive) 4
COOLING 8
Condenser Coil 8
Condenser Coil Maintenance and Cleaning Recommendation 8
Evaporator Coil 10
THERMOSTATIC EXPANSION VALVE (TXV) 10
TXV Operation 10
Replacing TXV 11
Refrigerant System Pressure Access Ports 11
PURON (R-410A) REFRIGERANT 12
Refrigerant Charge 12
COMPRESSOR 14
Lubrication 14
Replacing Compressor 14
Compressor Rotation 14
Filter Drier 14
Condenser-Fan Adjustment 14
Troubleshooting Cooling System 16
CONVENIENCE OUTLETS 17
Convenience Outlets 17
Installing Weatherproof Cover 17
Non-Powered Type 17
Unit-Powered Type 17
Duty Cycle 18
Maintenance 18
Fuse on Powered Type 18
SMOKE DETECTORS 18
System 18
Controller 18
Smoke Detector Sensor 18
Smoke Detector Locations 19
Completing Installation of Return Air Smoke Detector 20
FIOP Smoke Detector Wiring and Response 20
SENSOR AND CONTROLLER TESTS 21
Sensor Alarm Test 21
Controller Alarm Test 21
Dirty Controller Test 21
Dirty Sensor Test 21
Changing the Dirt Sensor Test 21
Remote Station Test 21
SD-TRK4 Remote Alarm Test Procedure 22
Remote Test/Reset Station Dirty Sensor Test 22
Dirty Sensor Test Using an SD-TRK4 22
Detector Cleaning 22
Indicators 22
Troubleshooting 23
PROTECTIVE DEVICES 24
Compressor Protection 24
Relief Device 24
Control Circuit, 24-V 24
GAS HEATING SYSTEM 24
General 24
Fuel Types and Pressures 25
Combustion-Air Blower 25
Burners and Igniters 26
Burner Ignition 28
Orifice Replacement 28
Troubleshooting Heating System 30
SYSTEMVU CONTROL SYSTEM 32
SystemVu Interface 32
Air Temperature Sensors 32
Additional SystemVu Installation and Troubleshooting 32
COMPRESSOR VFD 34
Drive Board 34
Converter Board 36
Filter Board 40
Capacitor Board 41
ECONOMIZER SYSTEMS 42
EconoMi$er2 42
PRE-START-UP/START-UP 43
START-UP, GENERAL 43
Unit Preparation 43
Additional Installation/Inspection 43
Gas Piping 43
Return-Air Filters 44
Outdoor-Air Inlet Screens 44
Compressor Mounting 44
Internal Wiring 44
Refrigerant Service Ports 44
Compressor Rotation 44
Cooling 44
Main Burner 44
Heating 45
Ventilation (Continuous Fan) 45
FASTENER TORQUE VALUES 45
START-UP, SYSTEMVU CONTROLS 45

Manufacturer reserves the right to discontinue, or change at any time, specifications or designs without notice and without incurring obligations.

APPENDIX A — MODEL NUMBER NOMENCLATURE 46
APPENDIX B — PHYSICAL DATA 47
APPENDIX C — FAN PERFORMANCE 51
APPENDIX D — WIRING DIAGRAMS 64
START-UP CHECKLIST CL-1

SAFETY CONSIDERATIONS

Installation and servicing of air-conditioning equipment can be hazardous due to system pressure and electrical components. Only trained and qualified service personnel should install, repair, or service air-conditioning equipment. Untrained personnel can perform the basic maintenance functions of replacing filters. Trained service personnel should perform all other operations.

When working on air-conditioning equipment, observe precautions in the literature, tags and labels attached to the unit, and other safety precautions that may apply. Follow all safety codes. Wear safety glasses and work gloves. Use quenching cloth for unbrazing operations. Have fire extinguishers available for all brazing operations.

Follow all safety codes. Wear safety glasses and work gloves. Use quenching cloth for brazing operations. Have fire extinguisher available. Read these instructions thoroughly and follow all warnings or cautions attached to the unit. Consult local building codes and National Electrical Code (NEC) for special requirements.

Recognize safety information. This is the safety ALERT symbol ⚠. When you see this symbol on the unit and in instructions or manuals, be aware of the potential for physical injury hazards.

Understand the signal words **DANGER**, **WARNING**, and **CAUTION**. These words are used with the safety ALERT symbol. DANGER indicates a hazardous situation which, if not avoided, will result in death or severe personal injury. **WARNING** indicates a hazardous situation which, if not avoided, could result in death or personal injury. **CAUTION** indicates a hazardous situation which, if not avoided, could result in minor to moderate injury or product and property damage. ***IMPORTANT*** is used to address practices not related to physical injury. **NOTE** is used to highlight suggestions which will result in enhanced installation, reliability, or operation.

⚠ WARNING

UNIT OPERATION AND SAFETY HAZARD

Failure to follow this warning could cause personal injury, death and/or equipment damage.

R-410A refrigerant systems operate at higher pressures than standard R-22 systems. Do not use R-22 service equipment or components on R-410A refrigerant equipment.

⚠ WARNING

FIRE, EXPLOSION HAZARD

Failure to follow this warning could result in serious personal injury, death, and/or property damage.

Disconnect gas piping from unit when leak testing at pressure greater than 0.5 psig (3450 Pa). Pressures greater than 0.5 psig (3450 Pa) will cause gas valve damage resulting in hazardous condition. If gas valve is subjected to pressure greater than 0.5 psig (3450 Pa), it must be replaced before use. When pressure testing field-supplied gas piping at pressures of 0.5 psig (3450 Pa) or less, a unit connected to such piping must be isolated by closing the manual gas valve(s).

⚠ WARNING

FIRE, EXPLOSION HAZARD

Failure to follow this warning could result in death, serious personal injury and/or property damage.

Never use non-certified refrigerants in this product. Non-certified refrigerants could contain contaminates that could lead to unsafe operating conditions. Use ONLY refrigerants that conform to AHRI Standard 700.

⚠ CAUTION

UNIT DAMAGE HAZARD

Failure to follow this caution may result in reduced unit performance or unit shutdown.

High velocity water from a pressure washer, garden hose, or compressed air should never be used to clean a coil. The force of the water or air jet will bend the fin edges and increase airside pressure drop.

⚠ WARNING

ELECTRICAL OPERATION HAZARD

Failure to follow this warning could result in personal injury or death.

Units with convenience outlet circuits may use multiple disconnects. Check convenience outlet for power status before opening unit for service. Locate its disconnect switch, if appropriate, and open it. Lock-out and tag-out this switch, if necessary.

IMPORTANT: Lockout/tag-out is a term used when electrical power switches are physically locked preventing power to the unit. A placard is placed on the power switch alerting service personnel that the power is disconnected.

UNIT ARRANGEMENT AND ACCESS

General

Figures 1 and 2 show general unit arrangement and access locations.

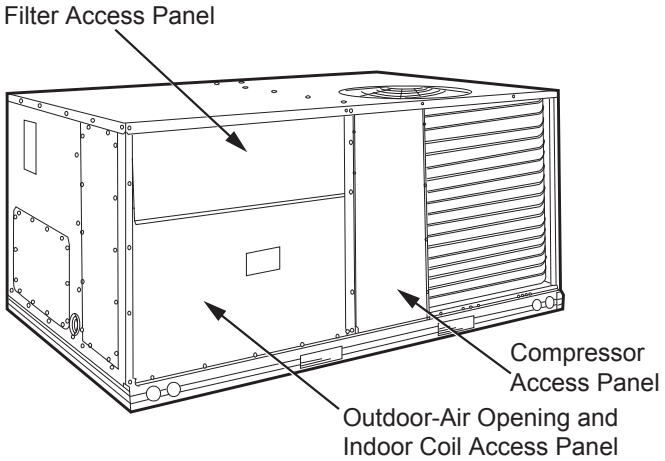

Fig. 1 — Typical Access Panel Locations

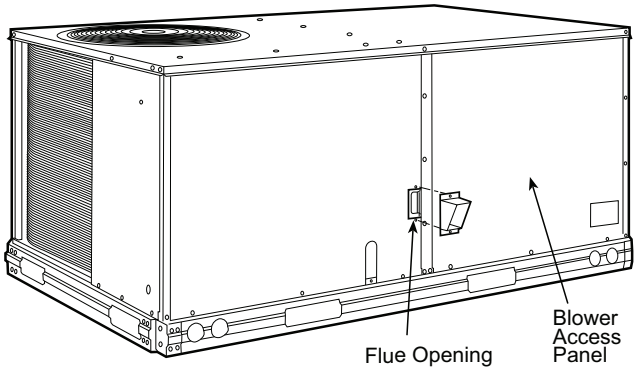

Fig. 2 — Blower Access Panel Location

Routine Maintenance

These items should be part of a routine maintenance program, to be checked every month or two, until a specific schedule for each can be identified for this installation:

QUARTERLY INSPECTION (AND 30 DAYS AFTER INITIAL START)

- Return air filter replacement
- Outdoor hood inlet filters cleaned
- Condenser coil cleanliness checked
- Condensate drain checked

SEASONAL MAINTENANCE

These items should be checked at the beginning of each season (or more often if local conditions and usage patterns dictate):

Air Conditioning

- Ensure outdoor fan motor mounting bolts are tight
- Ensure compressor mounting bolts are tight
- Inspect outdoor fan blade positioning
- Ensure control box is clean
- Check control box wiring condition
- Ensure wire terminals are tight
- Check refrigerant charge level
- Ensure indoor coils are clean
- Check supply blower motor amperage

Heating

- Heat exchanger flue passageways cleanliness
- Gas burner condition
- Gas manifold pressure
- Heating temperature rise

Economizer or Outside Air Damper

- Check inlet filters condition
- Check damper travel (economizer)
- Check gear and dampers for debris and dirt

Air Filters and Screens

Each unit is equipped with return air filters. If the unit has an economizer, it will also have an outside air screen. If a manual outside air damper is added, an inlet air screen will also be present.

Each of these filters and screens will need to be periodically replaced or cleaned.

Filters

RETURN AIR FILTERS

⚠ CAUTION

EQUIPMENT DAMAGE HAZARD

Failure to follow this CAUTION can result in premature wear and damage to equipment.

DO NOT OPERATE THE UNIT WITHOUT THE RETURN AIR FILTERS IN PLACE.

Dirt and debris can collect on heat exchangers and coils possibly resulting in a small fire. Dirt buildup on components can cause excessive current used resulting in motor failure.

Return air filters are disposable fiberglass media type. Access to the filters is through the small lift-out panel located on the rear side of the unit, above the evaporator/return air access panel (see Fig. 3).

To remove the filters:

1. Grasp the bottom flange of the upper panel.
2. Lift up and swing the bottom out until the panel disengages and pulls out.
3. Reach inside and extract the filters from the filter rack.
4. Replace these filters as required with similar replacement filters of same size.

To re-install the access panel:

1. Slide the top of the panel up under the unit top panel.
2. Slide the bottom into the side channels.
3. Push the bottom flange down until it contacts the top of the lower panel (or economizer top).

OUTSIDE AIR HOOD

Outside air hood inlet screens are permanent aluminum-mesh type filters. Check these for cleanliness. Remove the screens when cleaning is required. Clean by washing with hot low-pressure water and soft detergent and replace all screens before restarting the unit. Observe the flow direction arrows on the side of each filter frame.

ECONOMIZER INLET AIR SCREEN

This air screen is retained by filter clips under the top edge of the hood (see Fig. 3).

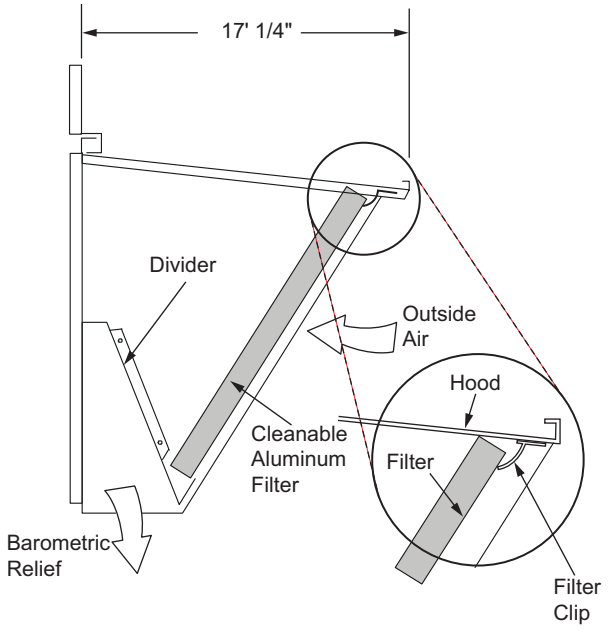

Fig. 3 — Filter Installation

To remove the filter, open the filter clips. Re-install the filter by placing the frame in its track, then closing the filter clips.

MANUAL OUTSIDE AIR HOOD SCREEN

This inlet screen is secured by a retainer angle across the top edge of the hood (see Fig. 4).

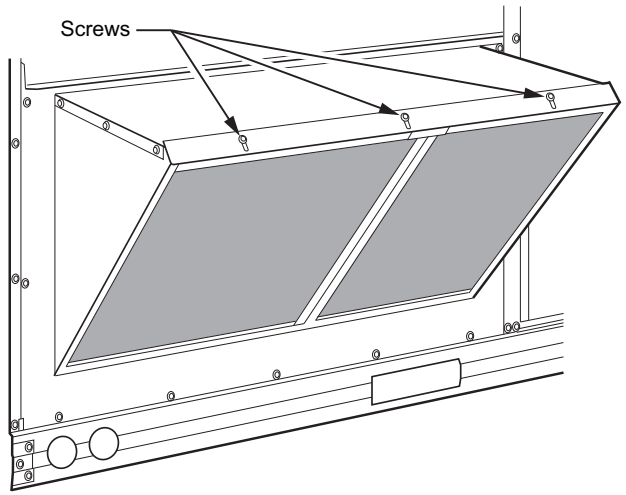

Fig. 4 — Screens Installed on Outdoor-Air Hood

To remove the screen, loosen the screws in the top retainer and slip the retainer up until the filter can be removed. Re-install by placing the frame in its track, rotating the retainer back down, and tightening all screws.

SUPPLY FAN (BLOWER) SECTION

⚠ WARNING

ELECTRICAL OPERATION HAZARD

Failure to follow this warning could result in personal injury or death.

Before performing service or maintenance operations on unit, LOCKOUT/TAGOUT the main power switch to unit. Electrical shock and rotating equipment could cause severe injury.

All low-voltage wiring should be routed through the provided raceway built into the corner post of the unit or secured to the unit control box with the electrical conduit in order to provide UL-required clearance between high and low-voltage wiring.

Supply Fan (Direct-Drive)

All JC units have the EcoBlue™ direct drive vane axial fan system. The fan is driven by an ECM motor with speed that is user set through the Unit Control Board (UCB). Speeds are fully configurable from 40% to 100% of motor's maximum speed (see Fig. 5 and 6).

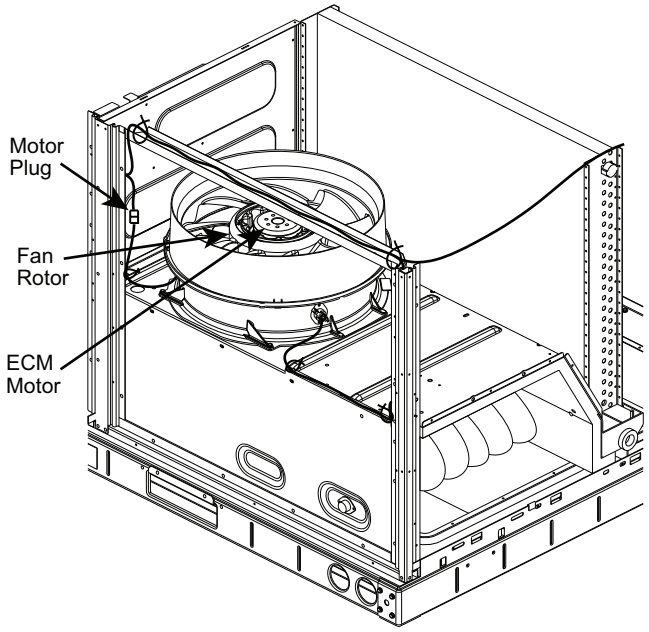

Fig. 5 — Direct-Drive Supply Fan Assembly

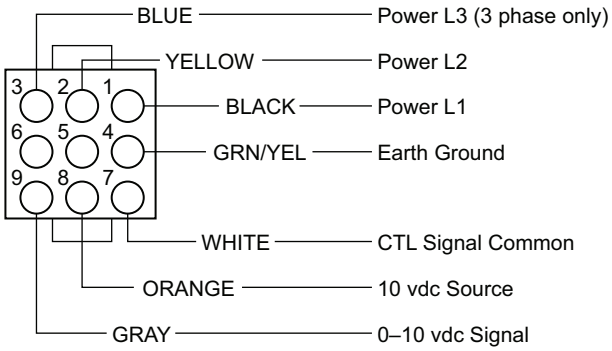

Fig. 6 — ECM Motor Plug Connectors

EVALUATING MOTOR SPEED

The direct drive ECM blower motor uses a constant speed design. Motor speed is controlled by a 0-10 vdc signal, where 10 vdc is equal to motor's maximum RPM.

SELECTING FAN SPEED

All units come factory set for 7.8 vdc or approximately 78% of the motor's maximum speed. Fan speed should be set per job specification CFM (cubic feet per minute) and ESP (external static pressure) required, and per the Fan speed set up label included on the unit's high voltage cover. In some cases, the Fan Speed Set Up label may already include the field setting if unit was previously installed. Check the box on the lower half of the label to see if the field voltage setting was filled in and if so, set fan speed to that voltage. Otherwise see the following detailed instructions.

NOTE: Fan Speed Set-Up is for full load airflow. If the unit has multiple stages of cooling, low cool and ventilation may operate at lower fan rpms. This offset is factory set and controlled by the UCB. If fan speed verification is being done with a strobe, fan speed should be verified in all unit operation modes.

Units with SystemVu™ Controls

On units equipped with the factory-installed SystemVu controller the Fan Speed settings are accessed through the SystemVu interface.

1. Check the job specifications for the CFM (cubic feet per minute) and ESP (external static pressure) required.
2. Using the chart on the Fan Speed Set Up labels (see Fig. 7), calculate the RPM from the CFM and ESP for the base unit.
3. If installing any accessories listed at the bottom of the Set Up Label, add accessory RPM to base unit RPM in upper portion of the label.

   NOTE: The Fan Speed Set Up labels are located on the High Voltage cover in the Control Box.
4. Press any key on the SystemVu interface to activate the display backlight and then press the MENU key.
5. Using the UP and DOWN arrow keys highlight SETTINGS and then press ENTER.
6. Use the DOWN arrow key highlight the UNIT CONFIGURATIONS menu then press ENTER.
7. Highlight UNIT CONFIGURATIONS then press ENTER.
8. Highlight INDOOR FAN and then press ENTER.
9. Refer to the job specifications to set the following, determining the values per the RPM Calculator label (see Fig. 7). Use the UP and DOWN arrow keys and the BACK key to set the values. Press ENTER after setting each value to continue to the next selection.

- IDF VENT SPD
- IDF HEAT SPD
- IDF LOW COOL SPD
- IDF HIGH SPD
- IDF FREE COOL SPD

For further details see the *48JC-04-06 Series Single Package Rooftop Units with SystemVu Controller Controls, Start-up, Operation and Troubleshooting* manual.

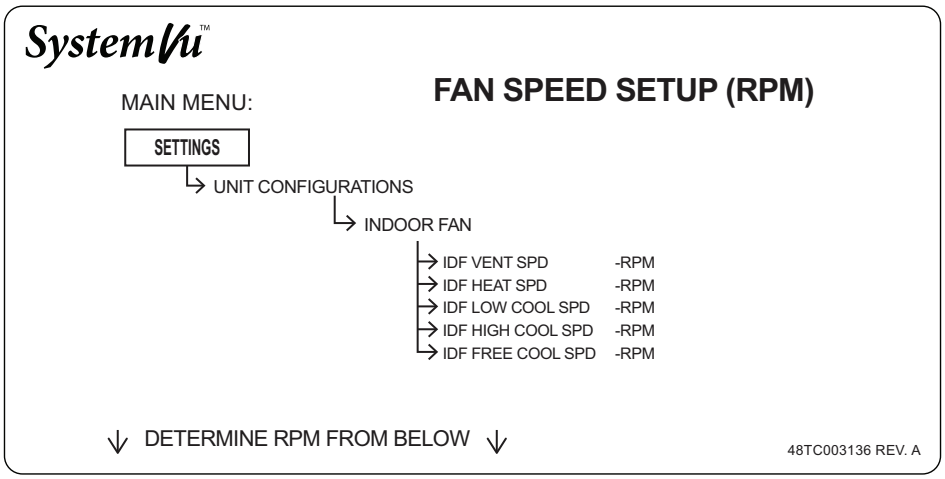

RPM Calculator

UNIT MODEL NUMBER / CFM	ESP in. wg 0.2	0.4	0.6	0.8	1.0	1.2	1.4	1.6	1.8	2.0
1500	1425	1609	1764	1902	2028	2147	2260	2367		
1625	1512	1688	1839	1974	2097	2212	2322			
1750	1601	1768	1916	2047	2168	2280	2387			
1875	1692	1850	1994	2123	2241	2351				
2000	1784	1933	2073	2200	2316					
2125	1878	2018	2153	2277						
2250	1973	2104	2235	2356						
2375	2069	2192	2317							
2500	2166	2282								
Field Accessories:										
Economizer	65	65	65	65	65	65	65	65		

NOTE: Values in the Field Accessories section are RPM adders.

Fig. 7 — Example of Fan Speed Set Up Labels for SystemVu™ Controls

TROUBLESHOOTING THE ECM MOTOR

EcoBlue™ motors are designed with several built-in protections included in the motor software. If the motor detects a fault it will safely shut down. For temperature related faults the motor requires a line voltage reset to continue operation. For all others, the motor will resume operation automatically as soon as the fault condition is cleared. See Table 1 for a complete list.

Table 1 — Fault Condition/Reset Trigger

Fault Condition	Reset Trigger	Description
Phase Failure	Automatic	One phase is missing or imbalanced. In this case the motor will come to a stop and then automatically restart when all phases are present.
Locked/ Blocked Rotor	Automatic	The rotor is blocked. Once the locking mechanism has been removed, the motor will automatically restart.
Motor Over Heated	Manual	The motor will stop in the event the motor over heats. In this case there has to be a manual restart.
Power Module Over Heated	Manual	The motor will stop in the event the electronics over heat. In this case there has to be a manual restart.
Line under-voltage	Automatic	Once the line voltage returns within permitted operating range, the fan will automatically restart.
Communication Error	Automatic	Internal communication error of the fan's electronics. The fan will restart automatically, if error is cleared.

Troubleshooting the motor requires a voltmeter.

1. Disconnect main power to the unit.
2. Disconnect motor plug in supply section of the unit.
3. Restore main unit power.
4. Check for proper line voltage at motor power leads Black (PL1-1), Yellow (PL1-2), and Blue (PL1-3). Blue is only present on 3-phase motors. See the following table.

48JC Unit Voltage	Motor Voltage	Min-Max Volts
208/230	230	187-253
460	460	414-506

5. Disconnect main power.
6. Reconnect motor plug in supply section of unit.
7. Restore main power.
8. Check for proper motor control voltage signal of 9.7 vdc to 10.3 vdc IFM on Unit Control Board (UCB) (see Fig. 8).
9. Using a jumper wire from unit control terminals R to G, engage motor operation.
10. Verify control signal from user speed selection switch by placing voltmeter taps in provided terminals marked vdc. Signal should be between 3.8 vdc and 10.3 vdc.
11. If the motor does not start and run, remove the fan assembly and replace the motor with one having the same part number. Do not substitute with an alternate design motor as the voltage/speed programming will not be the same as that on an original factory motor.

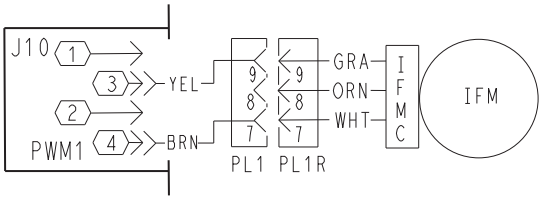

Fig. 8 — Supply Fan Control Wiring Diagram

Removing the Motor and Fan Assembly

NOTE: Due to press fit design of composite Rotor on Motor, it is highly recommended that any time a motor is replaced the fan rotor is replaced as well. The rest of the assembly may be reused.

See Fig. 9.

1. Unplug motor harness from control box harness and cut wire tie at the fan deck.
2. Unplug connectors from stator temperature limit switch.
3. Remove two screws at front of stator on fan deck.
4. Slide fan assembly forward a couple of inches to clear rear brackets and lift assembly out.

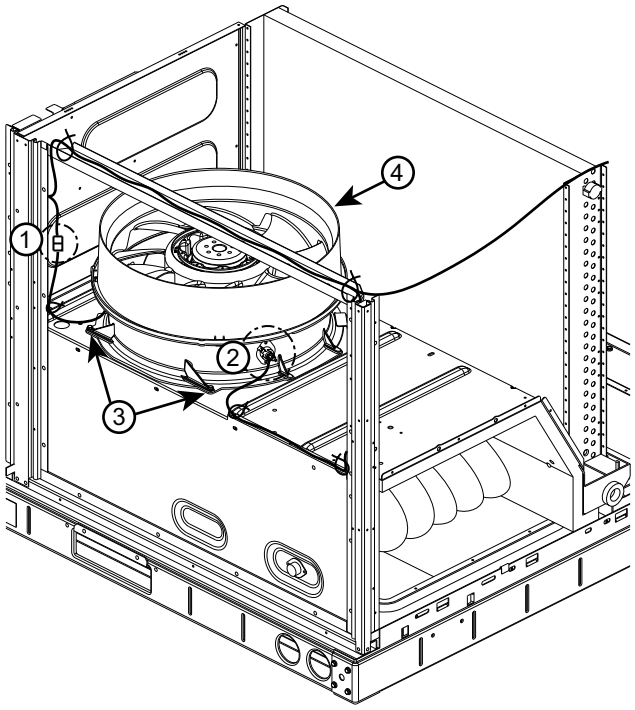

Fig. 9 — Fan Assembly Removal

Disassembling Motor and Fan Assembly

See Fig. 10.

1. Remove six screws from retaining rings in the top of the fan rotor.
2. Remove rotor from motor.
3. Remove four screws connecting motor to stator flange.
4. Remove stator from motor.
5. If required, remove stator limit switch on stator.
6. Remove three screws from the heat shield. Retain the heat shield if a new heat shield has not been ordered.

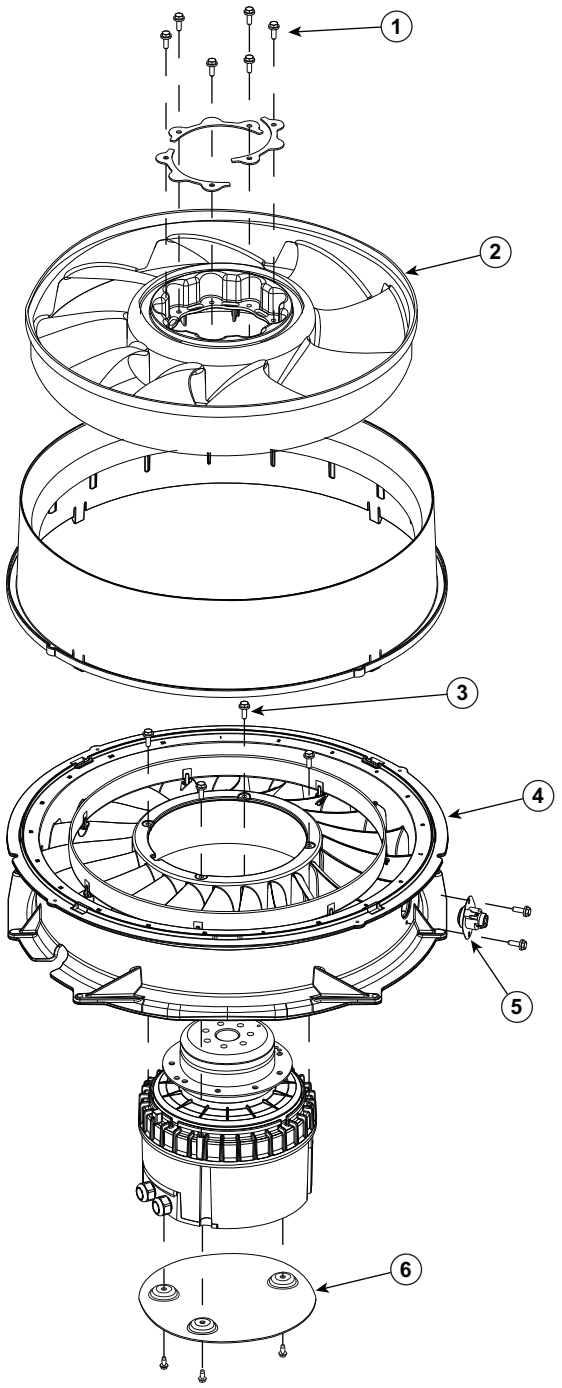

Fig. 10 — Disassembling Motor and Fan Assembly

Reassembly of Motor and Fan Assembly

See Fig.11.

1. Install heat shield on motor with three #8-32 x 3/8-in. thread cutting screws (P/N: AK92AB100). Tighten to 30 in.-lb (3.39 Nm).
2. Place motor on flat surface.
3. If required, install stator limit switch on stator with two #10 x 5/8-in. hex head screws (P/N: AL48AM217). Tighten to 50 in.-lb (5.65 Nm).
4. If required, insert composite ring into stator where pegs match up with holes.
5. Line up rectangle key way in the center of stator with rectangle feature on motor and set stator onto motor.
6. Install four #10-32 x 1/2-in. hex head machine screws (P/N: AD07AB126) to connect stator to motor. Tighten to 23 in.-lb (2.6 Nm).
7. Fit grommet on motor wire harness into keyhole feature on the side of the stator and pull wire harness out through grommet.
8. Install rotor on motor by lining up one of 9 holes on composite rotor with one of 9 holes on motor flange. This can be done by adjusting motor and the top of the motor hub and aligning using a 3/16-in. Allen key or similar pin. Press fan rotor down until it is flush with the motor flange.
9. Set retaining rings (x3) into composite rotor and install 6 #10-32 x 1/2-in. hex head machine screws (P/N: AD07AB126) through the holes in retaining rings. Tighten to 23 in.-lbs (2.6 Nm). It is recommended this screw installation be done in a star pattern.
10. Align tabs of composite casing with rectangular cutouts on top of stator and snap into place.
11. Final assembly should have a small clearance between top of plastic rotor and underside of casing lip. Spin rotor by hand to ensure no contact or rubbing between these two parts.

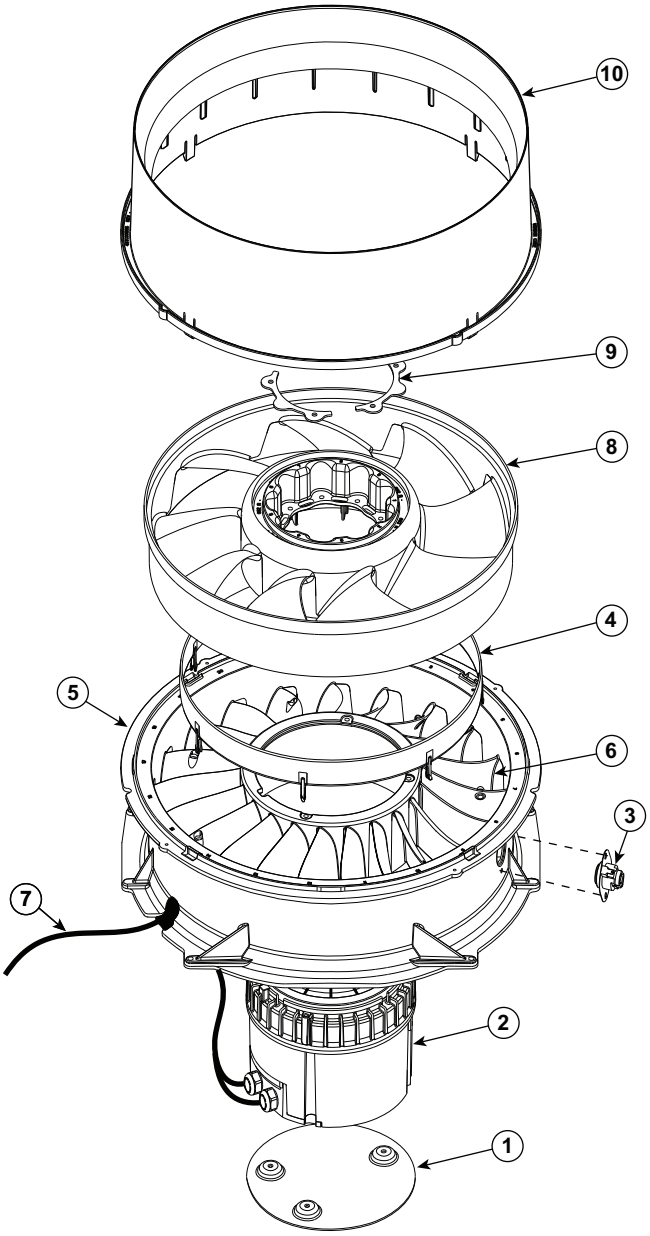

Fig. 11 — Fan System Re-Assembly

Reinstalling Motor and Fan Assembly

See Fig. 12.

1. Align motor harness/grommet at ~7 o'clock (facing installer) and align the bottom flats on right and left sides of fan stator with fan deck ribs. Drop fan assembly down into fan deck opening and slide back until stator is under the rear fan deck brackets.
2. Align (if necessary) two front holes and fasten stator to fan deck with 2 #10 x 5/8-in. hex head screws (P/N: AL48AM217). Tighten to 50 in.-lb (5.65 Nm).
3. Reconnect wires for stator temperature limit switch.
4. Pull motor harness tight through grommet and plug it in to the control box harness and secure in the corner with snap-in wire tie.

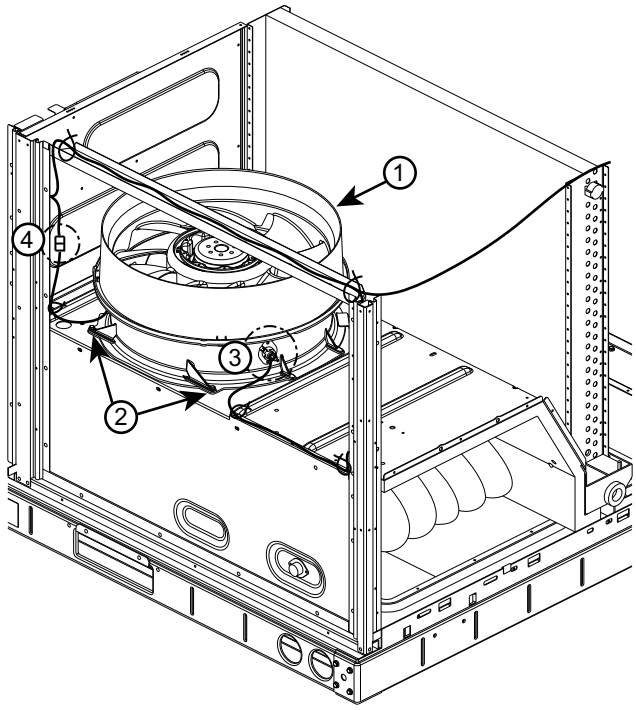

Fig. 12 — Fan Assembly Installation

COOLING

⚠ WARNING

UNIT OPERATION AND SAFETY HAZARD

Failure to follow this warning could cause personal injury, death and/or equipment damage.

This system uses R-410A refrigerant, which has higher pressures than R-22 and other refrigerants. No other refrigerant may be used in this system. Gauge set, hoses, and recovery system must be designed to handle R-410A refrigerant. If unsure about equipment, consult the equipment manufacturer.

Condenser Coil

The condenser coil is fabricated with round tube copper hairpins and plate fins of various materials and/or coatings (see Model Number Nomenclature in Appendix A to identify the materials provided in this unit). The coil may be one-row or composite-type two-row. Composite two-row coils are two single-row coils fabricated with a single return bend end tubesheet.

Condenser Coil Maintenance and Cleaning Recommendation

Routine cleaning of coil surfaces is essential to maintain proper operation of the unit. Elimination of contamination and removal of harmful residues will greatly increase the life of the coil and extend the life of the unit. The following maintenance and cleaning procedures are recommended as part of the routine maintenance activities to extend the life of the coil.

REMOVE SURFACE LOADED FIBERS

Surface loaded fibers or dirt should be removed with a vacuum cleaner. If a vacuum cleaner is not available, a soft non-metallic bristle brush may be used. In either case, the tool should be applied in the direction of the fins. Coil surfaces can be easily damaged (fin edges can be easily bent over and damage to the coating of a protected coil) if the tool is applied across the fins.

NOTE: Use of a water stream, such as a garden hose, against a surface loaded coil will drive the fibers and dirt into the coil. This will make cleaning efforts more difficult. Surface loaded fibers must be completely removed prior to using low velocity clean water rinse.

PERIODIC CLEAN WATER RINSE

A periodic clean water rinse is very beneficial for coils that are applied in coastal or industrial environments. However, it is very important that the water rinse is made with a very low velocity water stream to avoid damaging the fin edges. Monthly cleaning as described below is recommended. Rinsing coils in the opposite direction of airflow is recommended.

ROUTINE CLEANING OF COIL SURFACES

Periodic cleaning with Totaline® environmentally balanced coil cleaner is essential to extend the life of coils. This cleaner is available from Replacement Components Division as part number P902-0301 for a one gallon container, and part number P902-0305 for a 5 gallon container. It is recommended that all coils, including standard aluminum, pre-coated, copper/copper or e-coated coils be cleaned with the Totaline environmentally balanced coil cleaner as described below. Coil cleaning should be part of the unit's regularly scheduled maintenance procedures to ensure long life of the coil. Failure to clean the coils may result in reduced durability in the environment.

Avoid use of:

- coil brighteners
- acid cleaning prior to painting
- high pressure washers
- poor quality water for cleaning

Totaline environmentally balanced coil cleaner is nonflammable, hypo-allergenic, non-bacterial, and a USDA accepted biodegradable agent that will not harm the coil or surrounding components such as electrical wiring, painted metal surfaces, or insulation. Use of non-recommended coil cleaners is strongly discouraged since coil and unit durability could be affected.

Two-Row Condenser Coils

Clean coil as follows:

1. Turn off unit power, tag disconnect.
2. Remove all screws from the top panel except the screws securing the condenser fan to the top panel (see Fig. 13).

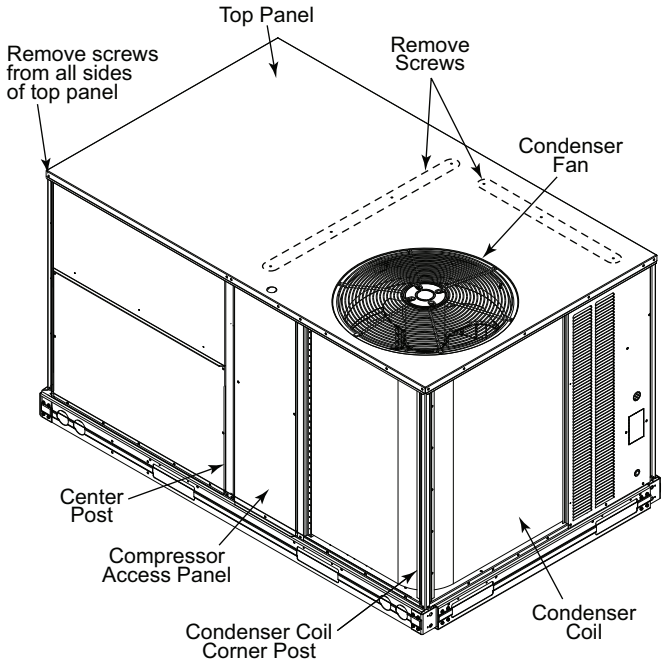

Fig. 13 — Location of Screws and Coil Corner Post

3. Lift and rotate the top panel at the condenser fan end and rotate the panel 90 degrees. Support the top panel so it remains level while resting on the condenser fan as shown in Fig. 14.

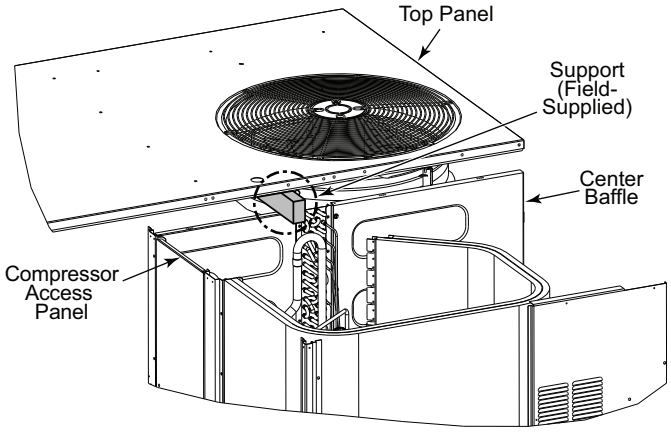

Fig. 14 — Top Panel Position

4. Remove the compressor access panel to access the lower coil clip. The condenser coil corner post may also be removed.
5. Remove the screws from both sides of the upper and lower coil retaining clips on the hairpin end of the coil tube sheets (see Fig. 15).
6. Remove the upper and lower retaining clips.

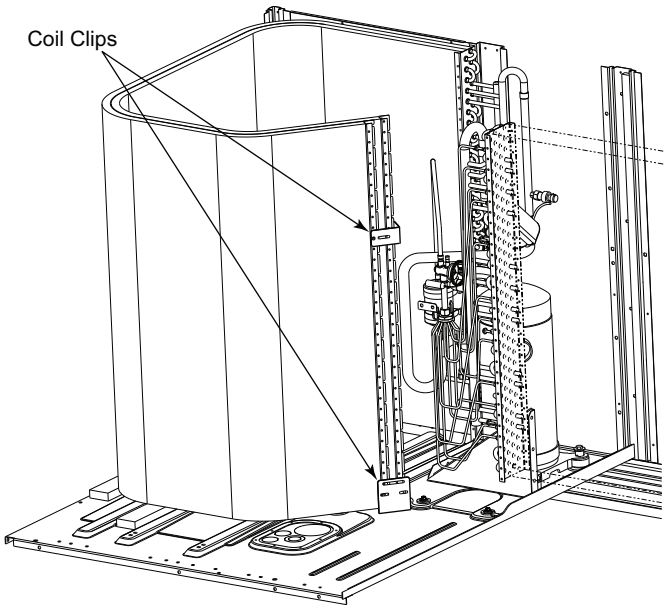

Fig. 15 — Condenser Coil Clips

7. Draw the inner coil inward to separate the coils for cleaning.
8. Insert a spacer (field-supplied) between the tube sheets to hold the coils apart (see Fig. 16).
9. Clean the outer coil surface to remove surface loaded fibers or dirt. See “Remove Surface Loaded Fibers” on page 8 for details.
10. Use a water hose or other suitable equipment to flush down between the 2 coil sections to remove dirt and debris. If a coil cleaner is used be sure to rinse the coils completely before reassembly.
11. Move the inner coil back into position. Reinstall the lower and upper coil clips. Reinstall the top panel and replace all screws.

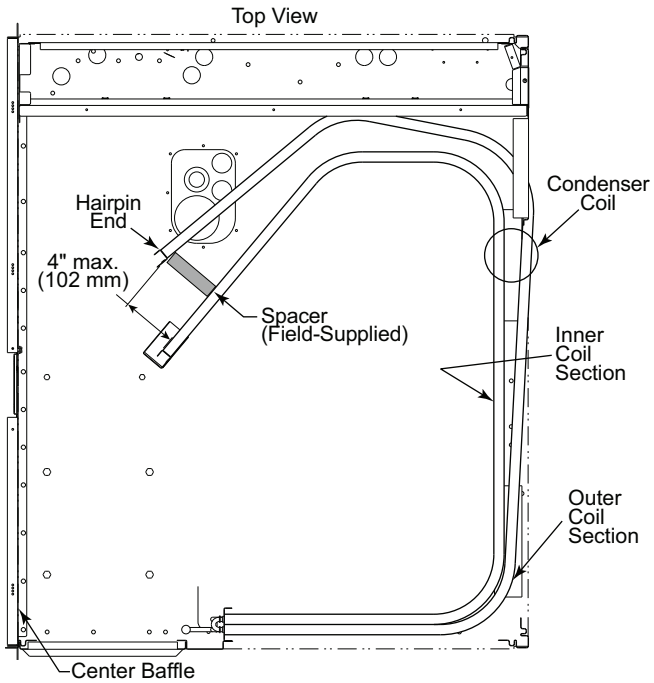

Fig. 16 — Separating Coil Sections

⚠ CAUTION

UNIT DAMAGE HAZARD

Failure to follow this caution may result in reduced unit performance or unit shutdown.

High velocity water from a pressure washer, garden hose, or compressed air should never be used to clean a coil. The force of the water or air jet will bend the fin edges and increase airside pressure drop.

⚠ CAUTION

UNIT DAMAGE HAZARD

Failure to follow this caution may result in accelerated corrosion of unit parts.

Harsh chemicals, household bleach or acid or basic cleaners should not be used to clean outdoor or indoor coils of any kind. These cleaners can be very difficult to rinse out of the coil and can accelerate corrosion at the fin/tube interface where dissimilar materials are in contact. If there is dirt below the surface of the coil, use the environmentally balanced coil cleaner.

Totaline Environmentally Balanced Coil Cleaner Application Equipment

- 2-1/2 gallon garden sprayer
- Water rinse with low velocity spray nozzle

Totaline Environmentally Balanced Coil Cleaner Application Instructions

1. Proper eye protection such as safety glasses is recommended during mixing and application.
2. Remove all surface loaded fibers and dirt with a vacuum cleaner as described above.
3. Thoroughly wet finned surfaces with clean water and a low velocity garden hose, being careful not to bend fins.
4. Mix Totaline environmentally balanced coil cleaner in a 2-1/2 gallon garden sprayer according to the instructions included with the cleaner. The optimum solution temperature is 100°F.

   NOTE: DO NOT USE water in excess of 130°F, as the enzymatic activity will be destroyed.
5. Thoroughly apply Totaline environmentally balanced coil cleaner solution to all coil surfaces including finned area, tube sheets and coil headers.
6. Hold garden sprayer nozzle close to finned areas and apply cleaner with a vertical, up-and-down motion. Avoid spraying in horizontal pattern to minimize potential for fin damage.
7. Ensure cleaner thoroughly penetrates deep into finned areas. Interior and exterior finned areas must be thoroughly cleaned. Finned surfaces should remain wet with cleaning solution for 10 minutes. Ensure surfaces are not allowed to dry before rinsing. Reapply cleaner as needed to ensure 10-minute saturation is achieved.
8. Thoroughly rinse all surfaces with low velocity clean water using downward rinsing motion of water spray nozzle. Protect fins from damage from the spray nozzle.

Evaporator Coil

CLEANING THE EVAPORATOR COIL

1. Turn unit power off. Install lockout tag. Remove evaporator coil access panel.
2. If economizer or two-position damper is installed, remove economizer by disconnecting Molex®[1] plug and removing mounting screws.
3. Slide filters out of unit.
4. Clean coil using a commercial coil cleaner or dishwasher detergent in a pressurized spray canister. Wash both sides of coil and flush with clean water. For best results, back-flush toward return-air section to remove foreign material. Flush condensate pan after completion.
5. Reinstall economizer and filters.
6. Reconnect wiring.
7. Replace access panels.

THERMOSTATIC EXPANSION VALVE (TXV)

All 48JC(G/H) units include a factory-installed, non-adjustable thermostatic expansion valve (TXV) control. The TXV is a bi-flow, bleed port expansion valve with an external equalizer. The TXVs are specifically designed to operate with Puron® refrigerant. Use only factory-authorized TXVs.

TXV Operation

The TXV is a metering device that is used in air conditioning and heat pump systems to adjust to the changing load conditions by maintaining a preset superheat temperature at the outlet of the evaporator coil.

The volume of refrigerant metered through the valve seat is dependent upon the following:

1. Superheat temperature is sensed by cap tube sensing bulb on suction tube at outlet of evaporator coil. This temperature is converted into pressure by refrigerant in the bulb pushing downward on the diaphragm, which opens the valve using the push rods.
2. The suction pressure at the outlet of the evaporator coil is transferred through the external equalizer tube to the underside of the diaphragm.
3. The pin is spring loaded, which exerts pressure on the underside of the diaphragm. Therefore, the bulb pressure works against the spring pressure and evaporator suction pressure to open the valve. If the load increases, the temperature increases at the bulb, which increases the pressure on the top side of the diaphragm. This opens the valve and increases the flow of refrigerant. The increased refrigerant flow causes the leaving evaporator temperature to decrease. This lowers the pressure on the diaphragm and closes the pin. The refrigerant flow is effectively stabilized to the load demand with negligible change in superheat.

1. Third-party trademarks and logos are the property of their respective owners.

Replacing TXV

1. Recover refrigerant.
2. Remove TXV support clamp using a 5/l6-in. nut driver.
3. Remove TXV using a wrench and an additional wrench on connections to prevent damage to tubing.
4. Remove equalizer tube from suction line of coil. Use file or tubing cutter to cut brazed equalizer line approximately 2 inches above suction tube.
5. Remove bulb from vapor tube inside cabinet.
6. Install the new TXV using a wrench and an additional wrench on connections to prevent damage to tubing while attaching TXV to distributor.
7. Attach the equalizer tube to the suction line. If the coil has a mechanical connection, then use a wrench and an additional wrench on connections to prevent damage. If the coil has a brazed connection, use a file or a tubing cutter to remove the mechanical flare nut from the equalizer line. Then use a new coupling to braze the equalizer line to the stub (previous equalizer line) in suction line.
8. Attach TXV bulb in the same location where the original (in the sensing bulb indent) was when it was removed, using the supplied bulb clamps (see Fig. 17).
9. Route equalizer tube through suction connection opening (large hole) in fitting panel and install fitting panel in place.
10. Sweat the inlet of TXV marked "IN" to the liquid line. Avoid excessive heat which could damage the TXV valve. Use quenching cloth when applying heat anywhere on TXV.

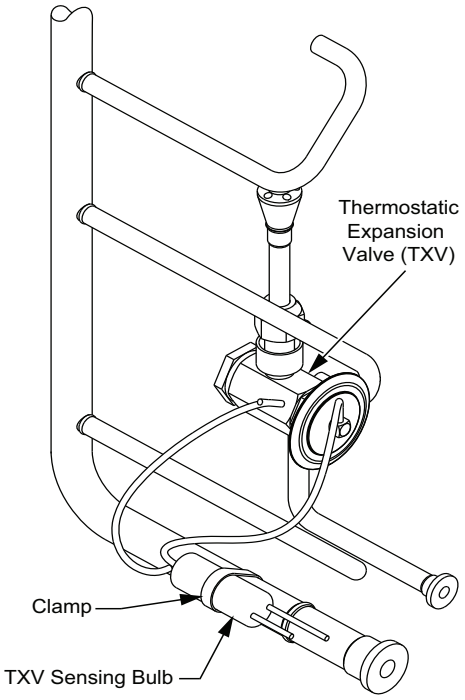

NOTE: Sensing bulb insulation removed for clarity.

Fig. 17 — TXV Valve and Sensing Bulb Location

Refrigerant System Pressure Access Ports

There are two access ports in the system: on the suction tube near the compressor and on the discharge tube near the compressor. These are brass fittings with black plastic caps. The hose connection fittings are standard 1/4-in. SAE male flare couplings.

The brass fittings are two-piece high flow valves, with a receptacle base brazed to the tubing and an integral spring-closed check valve core screwed into the base (see Fig. 18). This check valve is permanently assembled into this core body and cannot be serviced separately; replace the entire core body if necessary. Service tools are available from RCD that allow the replacement of the check valve core without having to recover the entire system refrigerant charge. Apply compressor refrigerant oil to the check valve core's bottom o-ring. Install the fitting body with 96 ± 10 in.-lb (10.85 ± 1.10 Nm) of torque; do not over-tighten.

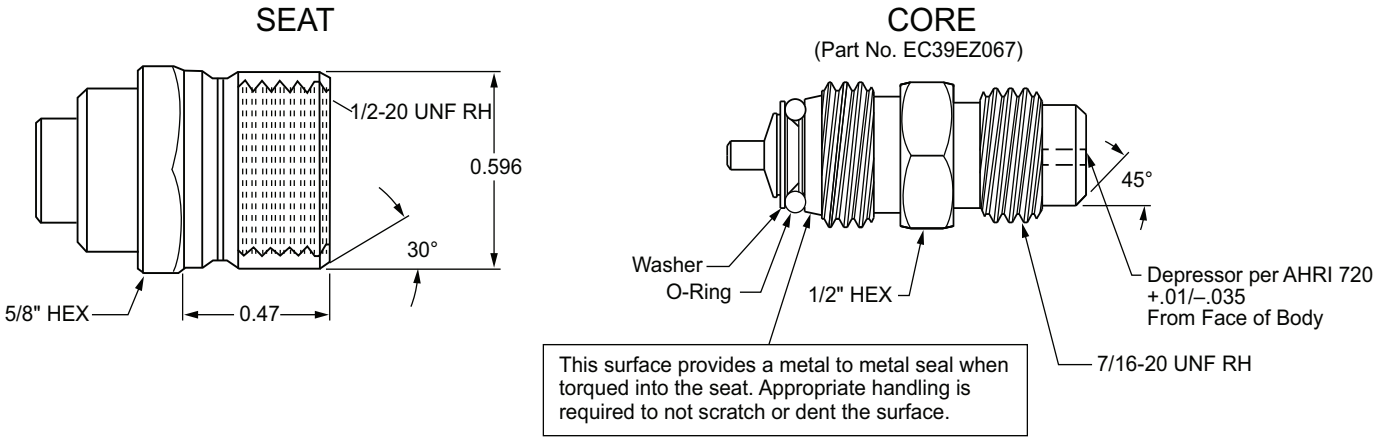

Fig. 18 — CoreMax™[1] Access Port Assembly

1. Third-party trademarks and logos are the property of their respective owners.

PURON (R-410A) REFRIGERANT

This unit is designed for use with Puron® (R-410A) refrigerant. Do not use any other refrigerant in this system.

Puron (R-410A) refrigerant is provided in pink (rose) colored cylinders. These cylinders are available with and without dip tubes; cylinders with dip tubes will have a label indicating this feature. For a cylinder with a dip tube, place the cylinder in the upright position (access valve at the top) when removing liquid refrigerant for charging. For a cylinder without a dip tube, invert the cylinder (access valve on the bottom) when removing liquid refrigerant.

Because Puron (R-410A) refrigerant is a blend, it is strongly recommended that refrigerant always be removed from the cylinder as a liquid. Admit liquid refrigerant into the system in the discharge line. If adding refrigerant into the suction line, use a commercial metering/expansion device at the gauge manifold; remove liquid from the cylinder, pass it through the metering device at the gauge set and then pass it into the suction line as a vapor. Do not remove Puron (R-410A) refrigerant from the cylinder as a vapor.

Refrigerant Charge

Amount of refrigerant charge is listed on the unit's nameplate. Refer to *Carrier GTAC2-5 Charging, Recovery, Recycling and Reclamation* training manual and the following procedures.

Unit panels must be in place when unit is operating during the charging procedure.

NO CHARGE

Use standard evacuating techniques. After evacuating system, weigh in the specified amount of refrigerant.

LOW-CHARGE COOLING

Using Cooling Charging Charts, Fig. 19-24, vary refrigerant until the conditions of the appropriate chart are met. Note the charging charts are different from type normally used. Charts are based on charging the units to the correct sub-cooling for the various operating conditions. Accurate pressure gauge and temperature sensing device are required. Connect the pressure gauge to the service port on the liquid line. Mount the temperature sensing device on the liquid line and insulate it so that outdoor ambient temperature does not affect the reading. Indoor-air cfm must be within the normal operating range of the unit.

48JC(G/H) SIZE DESIGNATION	NOMINAL TONS REFERENCE
04	3
05	4
06	5

EXAMPLE:

Model	48JC(G/H)*B04
Outdoor Temperature	85°F (29°C)
Suction Pressure	140 psig (965 kPa)
Suction Temperature should be	65°F (16°C)

USING COOLING CHARGING CHARTS

Take the outdoor ambient temperature and read the liquid pressure gauge. Refer to chart to determine what liquid temperature should be. If liquid temperature is low, add refrigerant. If liquid temperature is high, carefully recover some of the charge. Recheck the liquid pressure as charge is adjusted.

COOLING CHARGING CHARTS

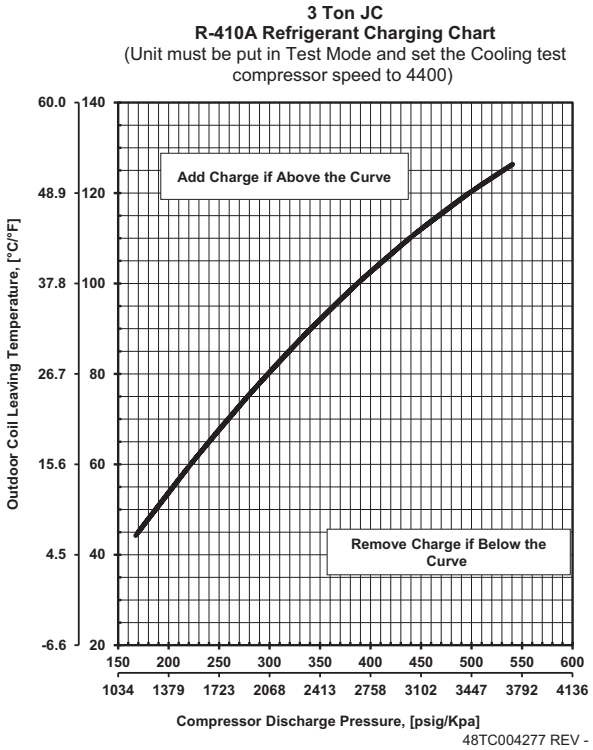

Fig. 19 — Cooling Charging Chart - 3 Ton

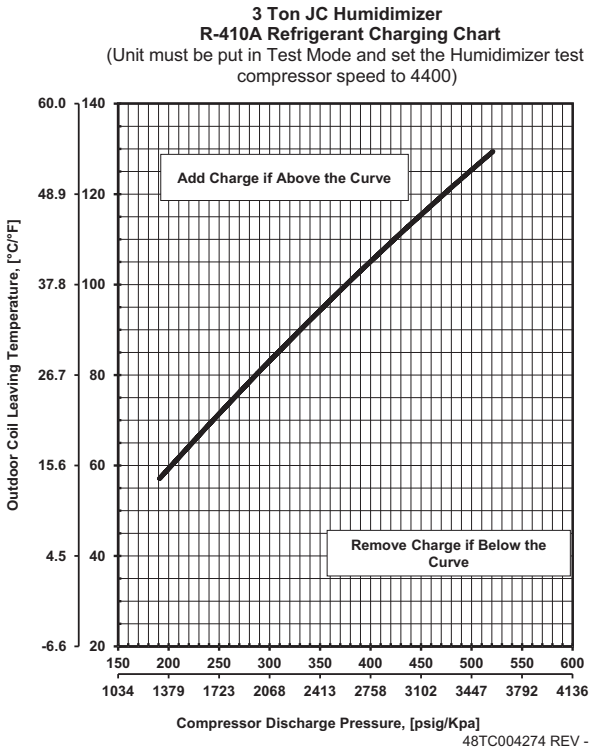

Fig. 20 — Cooling Charging Chart - 3 Ton with Humidi-MiZer® System Option

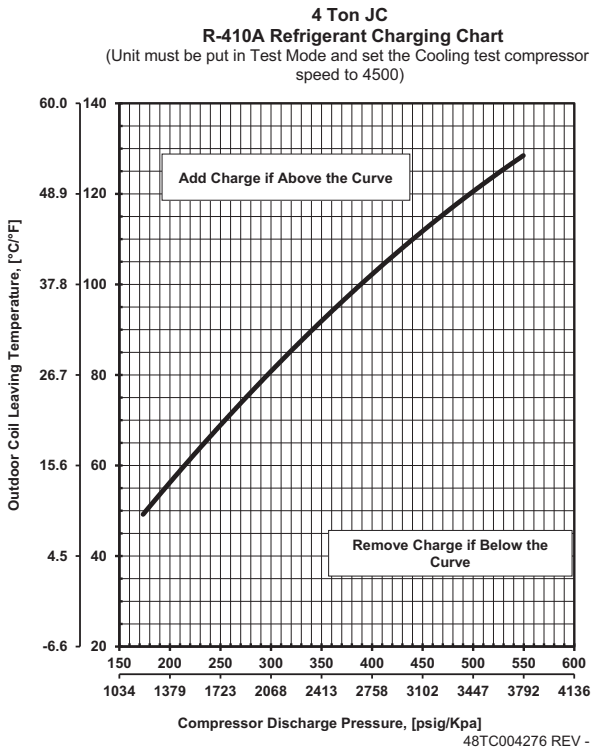

Fig. 21 — Cooling Charging Chart - 4 Ton

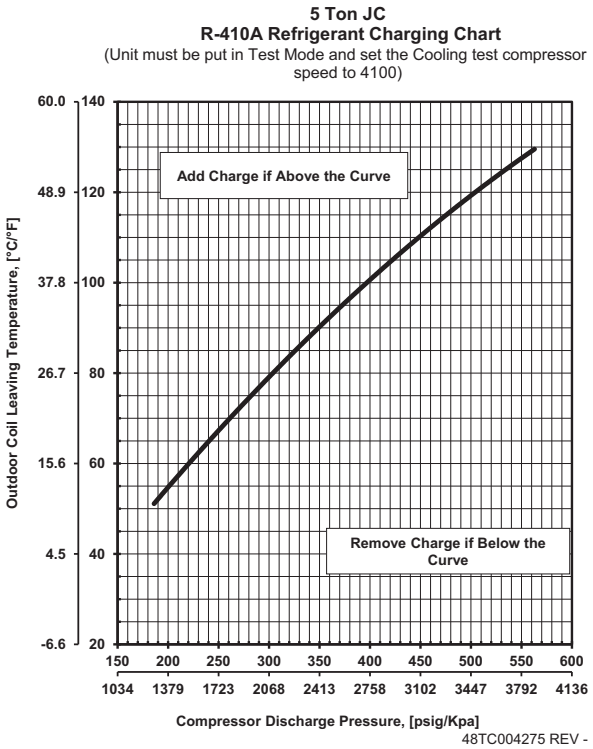

Fig. 23 — Cooling Charging Chart - 5 Ton

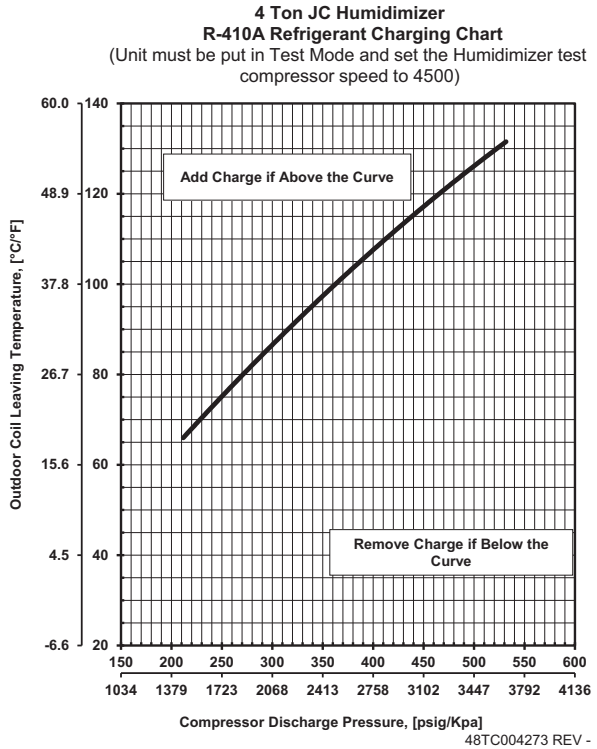

Fig. 22 — Cooling Charging Chart - 4 Ton with Humidi-MiZer® System Option

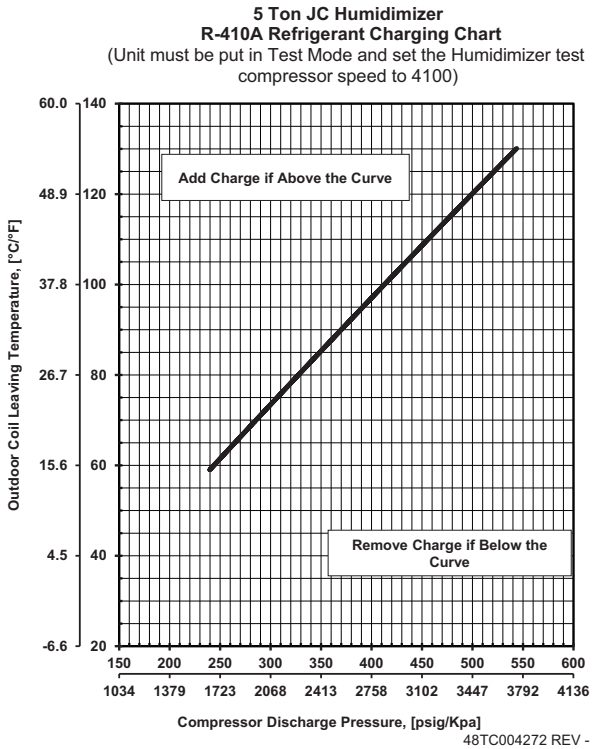

Fig. 24 — Cooling Charging Chart - 5 Ton with Humidi-MiZer® System Option

COMPRESSOR

Lubrication

The compressor is charged with the correct amount of oil at the factory.

⚠ CAUTION

UNIT DAMAGE HAZARD

Failure to follow this caution may result in damage to components.

The compressor is in a R-410A refrigerant system and uses a polyolester (POE) oil. This oil is extremely hygroscopic, meaning it absorbs water readily. POE oils can absorb 15 times as much water as other oils designed for HCFC and CFC refrigerants. Avoid exposure of the oil to the atmosphere.

⚠ WARNING

FIRE, EXPLOSION HAZARD

Failure to follow this warning could result in death, serious personal injury and/or property damage.

Never use air or gases containing oxygen for leak testing or for operating refrigerant compressors. Pressurized mixtures of air or gases containing oxygen can lead to an explosion.

⚠ WARNING

FIRE, EXPLOSION HAZARD

Failure to follow this warning could result in death, serious personal injury and/or property damage.

Never use non-certified refrigerants in this product. Non-certified refrigerants could contain contaminates that could lead to unsafe operating conditions. Use ONLY refrigerants that conform to AHRI Standard 700.

Replacing Compressor

NOTE: Only factory-trained service technicians should remove and replace compressor units.

⚠ CAUTION

INSTALLATION SITE DAMAGE

Failure to follow this caution can result in damage to equipment location site.

R-410A refrigerant contains polyolester (POE) oil that can damage the roof membrane. Caution should be taken to prevent POE oil from spilling onto the roof surface.

The factory also recommends that the suction and discharge lines be cut with a tubing cutter instead of using a torch to remove brazed fittings.

Compressor Rotation

⚠ CAUTION

EQUIPMENT DAMAGE HAZARD

Failure to follow this caution can result in premature wear and damage to equipment.

Scroll compressors can only compress refrigerant if rotating in the right direction. Reverse rotation for extended times can result in internal damage to the compressor. Scroll compressors are sealed units and cannot be repaired on site location.

NOTE: When the compressor is rotating in the wrong direction, the unit makes an elevated level of noise and does not provide cooling.

On 3-phase units with scroll compressors, it is important to be certain compressor is rotating in the proper direction. To determine whether or not compressor is rotating in the proper direction:

1. Connect service gauges to suction and discharge pressure fittings.
2. Energize the compressor.
3. The suction pressure should drop and the discharge pressure should rise, as is normal on any start-up.

   NOTE: If the suction pressure does not drop and the discharge pressure does not rise to normal levels, the evaporator fan is probably also rotating in the wrong direction.
4. Turn off power to the unit.
5. Reverse any two of the three unit power leads.
6. Reapply electrical power to the compressor. The suction pressure should drop and the discharge pressure should rise which is normal for scroll compressors on start-up.
7. Replace compressor if suction/discharge pressures are not within specifications for the specific compressor.

The suction and discharge pressure levels should now move to their normal start-up levels.

Filter Drier

Replace whenever refrigerant system is exposed to atmosphere. Only use factory specified liquid-line filter driers with working pressures no less than 650 psig. Do not install a suction-line filter drier in liquid line. A liquid-line filter drier designed for use with Puron refrigerant is required on every unit.

Condenser-Fan Adjustment

1. Shut off unit power supply. Install lockout tag.
2. Remove condenser-fan assembly (grille, motor, and fan) (see Fig. 25).
3. Loosen fan hub setscrews.
4. Adjust fan height by pushing fan until it stops on the fan shaft.
5. Tighten set screw to 60 in.-lb (6.78 Nm).
6. Replace condenser-fan assembly. When replacing the condenser-fan assembly follow the screw pattern sequence shown in Fig. 26. The screws must be replaced in the sequence shown in the figure.

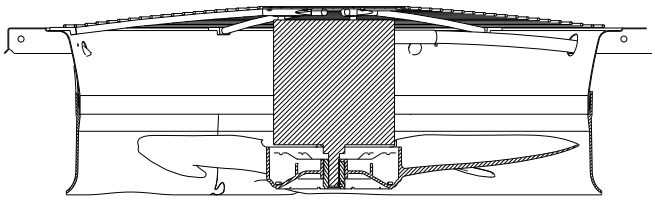

Fig. 25 — Condenser Fan Adjustment

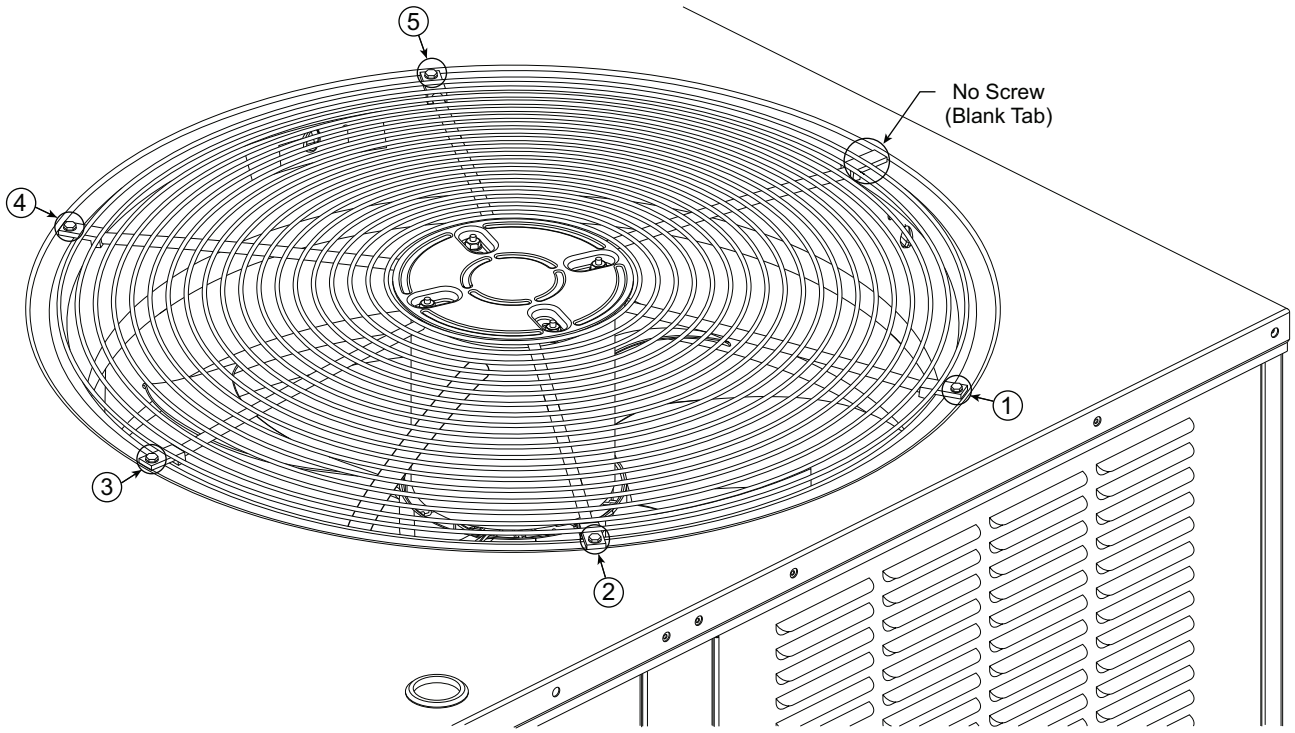

Fig. 26 — Condenser-Fan Assembly — Screw Pattern Sequence

Troubleshooting Cooling System

Refer to Table 2 for additional troubleshooting topics.

Table 2 — Troubleshooting

SYMPTOM	CAUSE	SOLUTION
Compressor and Outdoor Fan Will Not Start	Power failure.	Call power company.
	Fuse blown or circuit breaker tripped.	Replace fuse or reset circuit breaker. Determine root cause.
	Defective thermostat, contactor, transformer. control relay, or capacitor.	Replacement component.
	Insufficient line voltage.	Determine cause and correct.
	Incorrect or faulty wiring.	Check wiring diagram and rewire correctly.
	Thermostat setting too high.	Lower thermostat setting below room temperature.
	High pressure switch tripped.	See problem “Excessive head pressure.”
	Low pressure switch tripped.	Check system for leaks. Repair as necessary.
	Freeze-up protection thermostat tripped.	See problem “Suction pressure too low.”
Compressor Will Not Start but Outdoor Fan Runs	Faulty wiring or loose connections in compressor circuit.	Check wiring and repair or replace.
	Compressor motor burned out, seized, or internal overload open.	Determine cause. Replace compressor or allow enough time for internal overload to cool and reset.
	Defective run/start capacitor, overload, start relay.	Determine cause. Replace compressor or allow enough time for internal overload to cool and reset.
	One leg of 3-phase power dead.	Replace fuse or reset circuit breaker. Determine cause.
Compressor Cycles (Other Than Normally Satisfying Thermostat)	Refrigerant overcharge or undercharge.	Recover refrigerant, evacuate system, and recharge to nameplate.
	Defective compressor.	Replace and determine cause.
	Insufficient line voltage.	Determine cause and correct.
	Blocked outdoor coil or dirty air filter.	Determine cause and correct.
	Defective Run/Start capacitor, overload, start relay.	Determine cause and correct.
	Defective thermostat.	Replace thermostat.
	Faulty outdoor-fan (cooling) or indoor-fan (heating) motor or capacitor.	Replace faulty part.
	Restriction in refrigerant system.	Locate restriction and remove.
	Defective loader plug.	Determine cause and replace.
Compressor Operates Continuously	Dirty air filter.	Replaced filter.
	Unit undersized for load.	Decrease load or increase unit size.
	Thermostat set too low (cooling).	Reset thermostat.
	Low refrigerant charge.	Locate leak; repair and recharge.
	Air in system.	Recover refrigerant, evacuate system, and recharge.
	Outdoor coil dirty or restricted.	Clean coil or remove restriction.
Compressor Makes Excessive Noise	Compressor rotating in the wrong direction.	Reverse the 3-phase power leads as described in Start-Up.
Excessive Head Pressure	Dirty outside.	Replace filter.
	Dirty outdoor coil (cooling).	Clean coil.
	Refrigerant overcharged.	Recover excess refrigerant.
	Air in system.	Recover refrigerant, evacuate system, and recharge.
	Condensing air restricted or air short-cycling.	Determine cause and correct.
Head Pressure Too Low	Low refrigerant charge.	Check for leaks; repair and recharge
	Compressor scroll plates defective.	Replace compressor
	Restriction in liquid tube.	Remove restriction.
Excessive Suction Pressure	High heat load.	Check for source and eliminate.
	Compressor scroll plates defective.	Replace compressor.
	Refrigerant overcharge.	Recover excess refrigerant.
Suction Pressure Too Low	Dirty air filter (cooling).	Replace filter.
	Dirt or heavily iced outdoor coil (heating).	Clean outdoor coil. Check defrost cycle operation.
	Low refrigerant charge.	Check for leaks; repair and recharge.
	Metering device or low side restricted	Remove source of restriction.
	Insufficient indoor airflow (cooling mode).	Increase air quantity. Check filter and replace if necessary.
	Temperature too low in conditioned area.	Reset thermostat.
	Field-installed filter drier restricted.	Replace.
	Outdoor ambient temperature below 40°F (cooling).	Install low-ambient kit.
	Outdoor fan motor(s) not operating (heating).	Check fan motor operation.

CONVENIENCE OUTLETS

⚠ WARNING

ELECTRICAL OPERATION HAZARD

Failure to follow this warning could result in personal injury or death.

Units with convenience outlet circuits may use multiple disconnects. Check convenience outlet for power status before opening unit for service. Locate its disconnect switch, if appropriate, and open it. Lock-out and tag-out this switch, if necessary.

Convenience Outlets

Two types of convenience outlets are offered on 48JC(G/H) models: non-powered and unit-powered. Both types provide a 125-vac ground-fault circuit-interrupt (GFCI) duplex receptacle rated at 15A behind a hinged waterproof access cover, located on the end panel of the unit (see Fig. 27).

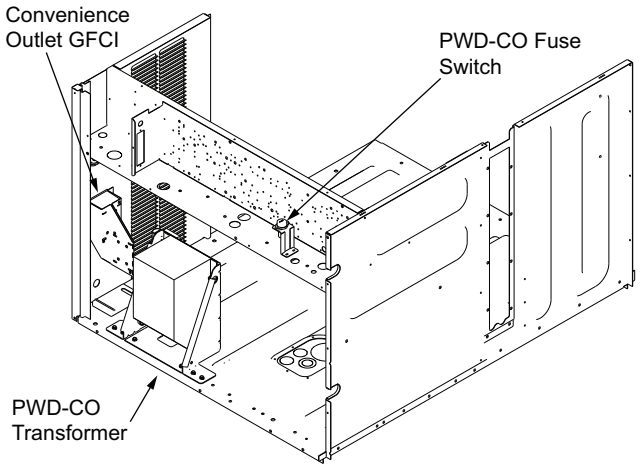

Fig. 27 — Convenience Outlet Location

Installing Weatherproof Cover

A weatherproof while-in-use cover for the factory installed convenience outlets is now required by UL standards. This cover cannot be factory-mounted due to its depth. The cover must be installed at unit installation. For shipment, the convenience outlet is covered with a blank cover plate.

The weatherproof cover kit is shipped in the unit's control box. The kit includes the hinged cover, a backing plate and gasket.

NOTE: DISCONNECT ALL POWER TO UNIT AND CONVENIENCE OUTLET. Use approved lockout/tag-out procedures.

1. Remove the blank cover plate at the convenience outlet; discard the blank cover.
2. Loosen the two screws at the GFCI duplex outlet, until approximately 1/2-in. (13 mm) under screw heads is exposed.
3. Press the gasket over the screw heads. Slip the backing plate over the screw heads at the keyhole slots and align with the gasket; tighten the two screws until snug (do not over-tighten).
4. Mount the weatherproof cover to the backing plate as shown in Fig. 28.
5. Remove two slot fillers in the bottom of the cover to permit service tool cords to exit the cover.
6. Check cover installation for full closing and latching.

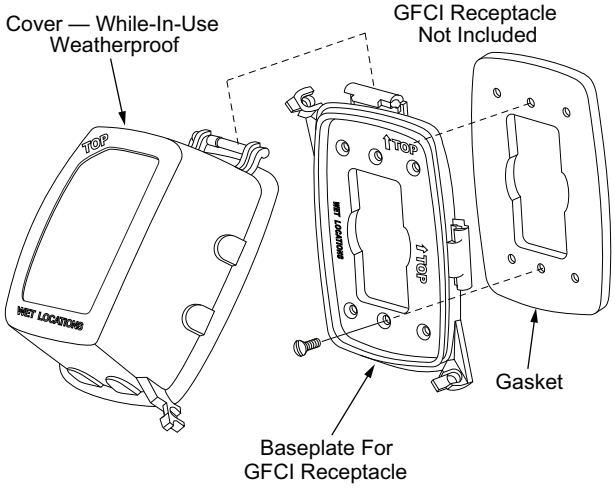

Fig. 28 — Weatherproof Cover Installation

Non-Powered Type

This type requires the field installation of a general-purpose 125-v 15-A circuit powered from a source elsewhere in the building. Observe national and local codes when selecting wire size, fuse or breaker requirements and disconnect switch size and location. Route 125-v power supply conductors into the bottom of the utility box containing the duplex receptacle.

Unit-Powered Type

A unit-mounted transformer is factory-installed to step-down the main power supply voltage to the unit to 115-v at the duplex receptacle. This option also includes a manual switch with fuse, located in a utility box and mounted on a bracket behind the convenience outlet; access is through the unit's control box access panel (see Fig. 27).

The primary leads to the convenience outlet transformer are not factory-connected. Selection of primary power source is a customer option. If local codes permit, the transformer primary leads can be connected at the line-side terminals on a unit-mounted non-fused disconnect or Heating, Air Conditioning and Refrigeration (HACR) breaker switch; this will provide service power to the unit when the unit disconnect switch or HACR switch is open. Other connection methods will result in the convenience outlet circuit being de-energized when the unit disconnect or HACR switch is open (see Fig. 29).

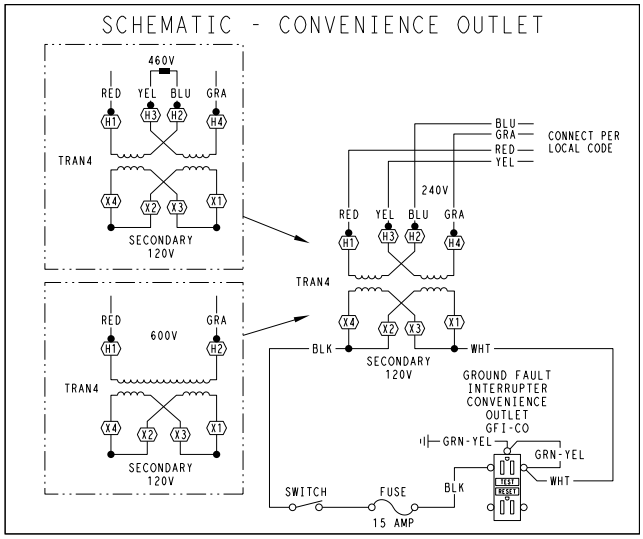

UNIT VOLTAGE	CONNECT AS	PRIMARY CONNECTIONS	TRANSFORMER TERMINALS
208, 230	240	L1: RED +YEL L2: BLU + GRA	H1 + H3 H2 + H4
460	480	L1: RED Splice BLU + YEL L2: GRA	H1 H2 + H3 H4
575	600	L1: RED L2: GRA	H1 H2

Fig. 29 — Powered Convenience Outlet Wiring

Duty Cycle

The unit-powered convenience outlet has a duty cycle limitation. The transformer is intended to provide power on an intermittent basis for service tools, lamps, etc; it is not intended to provide 15A loading for continuous duty loads (such as electric heaters for overnight use). Observe a 50% limit on circuit loading above 8A (i.e., limit loads exceeding 8A to 30 minutes of operation every hour).

Maintenance

Periodically test the GFCI receptacle by pressing the TEST button on the face of the receptacle. This should cause the internal circuit of the receptacle to trip and open the receptacle. Check for proper grounding wires and power line phasing if the GFCI receptacle does not trip as required. Press the RESET button to clear the tripped condition.

Fuse on Powered Type

The factory fuse is a Bussmann Fusetron[1] T-15, non-renewable screw-in (Edison base) type plug fuse.

USING UNIT-MOUNTED CONVENIENCE OUTLETS

Units with unit-mounted convenience outlet circuits will often require that two disconnects be opened to de-energize all power to the unit. Treat all units as electrically energized until the convenience outlet power is also checked and de-energization is confirmed. Observe National Electrical Code Article 210, Branch Circuits, for use of convenience outlets.

1. Third-party trademarks and logos are the property of their respective owners.

SMOKE DETECTORS

Smoke detectors are available as factory-installed options on 48JC(G/H) models. Smoke detectors may be specified for supply air only, for return air without or with economizer, or in combination of supply air and return air. Return air smoke detectors are arranged for vertical return configurations only. All components necessary for operation are factory-provided and mounted. The unit is factory-configured for immediate smoke detector shutdown operation; additional wiring or modifications to unit terminal board may be necessary to complete the unit and smoke detector configuration to meet project requirements.

System

The smoke detector system consists of a four-wire controller and one or two sensors. Its primary function is to shut down the rooftop unit in order to prevent smoke from circulating throughout the building. It is not to be used as a life saving device.

Controller

The controller (see Fig. 30) includes a controller housing, a printed circuit board, and a clear plastic cover. The controller can be connected to one or two compatible duct smoke sensors. The clear plastic cover is secured to the housing with a single captive screw for easy access to the wiring terminals. The controller has three LEDs (for Power, Trouble and Alarm) and a manual test/reset button (on the cover face).

Smoke Detector Sensor

The smoke detector sensor (see Fig. 31) includes a plastic housing, a printed circuit board, a clear plastic cover, a sampling tube inlet and an exhaust tube. The sampling tube (when used) and exhaust tube are attached during installation. The sampling tube varies in length depending on the size of the rooftop unit. The clear plastic cover permits visual inspections without having to disassemble the sensor. The cover attaches to the sensor housing using four captive screws and forms an airtight chamber around the sensing electronics. Each sensor includes a harness with an RJ45 terminal for connecting to the controller. Each sensor has four LEDs (for Power, Trouble, Alarm and Dirty) and a manual test/reset button (on the left-side of the housing).

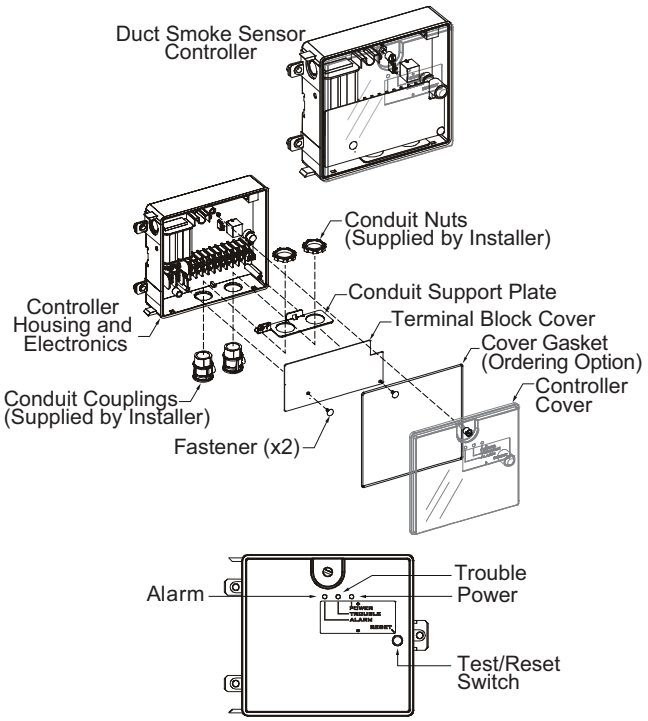

Fig. 30 — Controller Assembly

Air is introduced to the duct smoke detector sensor's sensing chamber through a sampling tube that extends into the HVAC duct and is directed back into the ventilation system through a (shorter) exhaust tube.

The difference in air pressure between the two tubes pulls the sampled air through the sensing chamber. When a sufficient amount of smoke is detected in the sensing chamber, the sensor signals an alarm state and the controller automatically takes the appropriate action to shut down fans and blowers, change over air handling systems, notify the fire alarm control panel, etc.

The sensor uses a process called differential sensing to prevent gradual environmental changes from triggering false alarms. A rapid change in environmental conditions, such as smoke from a fire, causes the sensor to signal an alarm state but dust and debris accumulated over time does not.

The difference in air pressure between the two tubes pulls the sampled air through the sensing chamber. When a sufficient amount of smoke is detected in the sensing chamber, the sensor signals an alarm state and the controller automatically takes the appropriate action to shut down fans and blowers, change over air handling systems, notify the fire alarm control panel, etc.

For installations using two sensors, the duct smoke detector does not differentiate which sensor signals an alarm or trouble condition.

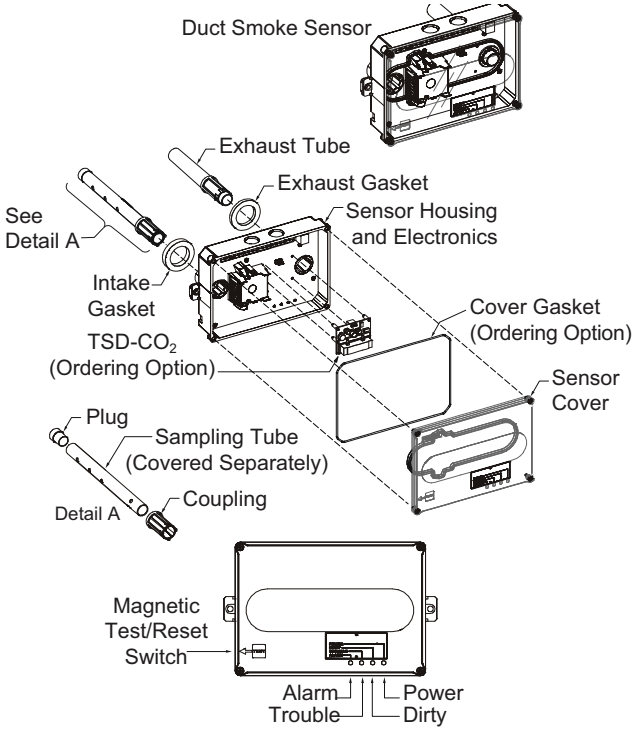

Fig. 31 — Smoke Detector Sensor

Smoke Detector Locations

SUPPLY AIR

The supply air smoke detector sensor is located to the right of the unit's indoor (supply) fan (see Fig. 32). Access is through the fan access panel. The sampling tube inlet extends through the fan deck (into a high pressure area). The controller is located on a bracket to the right of the return filter, accessed through the lift-off filter panel.

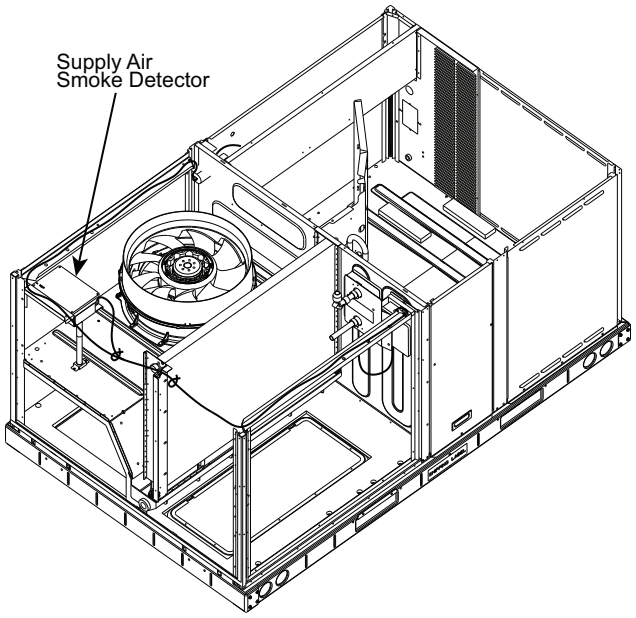

Fig. 32 — Typical Supply Air Smoke Detector Sensor Location

RETURN AIR SMOKE DETECTOR SENSOR WITHOUT ECONOMIZER

The sampling tube is located across the return air opening on the unit basepan (see Fig. 33). The holes in the sampling tube face downward, into the return air stream. The sampling tube is connected through tubing to the return air sensor that is mounted on a bracket high on the partition between return filter and controller location. The sensor is shipped in a flat-mounting location. Installation requires that this sensor be relocated to its operating location and the tubing to the sampling tube be connected. See "Completing Installation of Return Air Smoke Detector" on page 20.

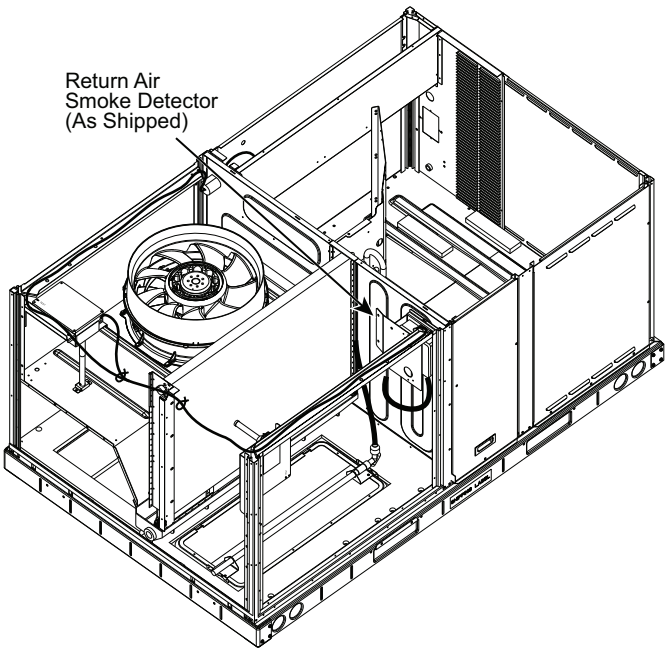

Fig. 33 — Typical Return Air Smoke Detector Location

RETURN AIR SMOKE DETECTOR SENSOR WITH ECONOMIZER

The sampling tube is inserted through the side plates of the economizer housing, placing it across the return air opening on the unit basepan (see Fig. 34). The holes in the sampling tube face downward, into the return air stream. The sampling tube is connected using tubing to the return air sensor mounted on a bracket high on the partition between return filter and controller location. The sensor is shipped in a flat-mounting location. Installation requires the sensor be relocated to its operating location and the tubing to the sampling tube be connected. See "Completing Installation of Return Air Smoke Detector" below.

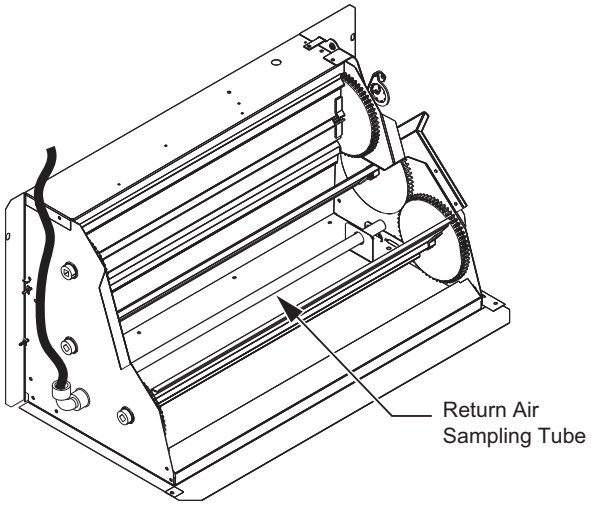

Fig. 34 — Return Air Sampling Tube Location (View reoriented to show opposite side for clarity.)

Completing Installation of Return Air Smoke Detector

Use the following steps to complete the installation of the return air smoke detector.

1. Unscrew the two screws holding the return air sensor detector plate (see Fig. 35). Save the screws.
2. Remove the return air smoke sensor module and its detector plate.

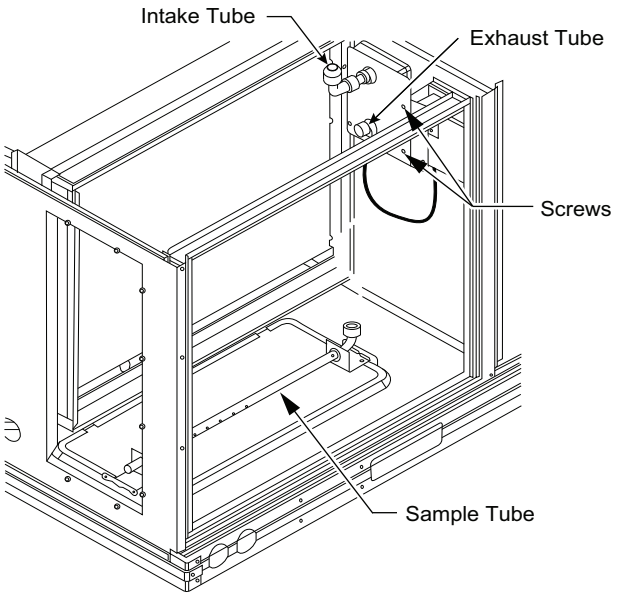

Fig. 35 — Return Air Smoke Detector Shipping Position

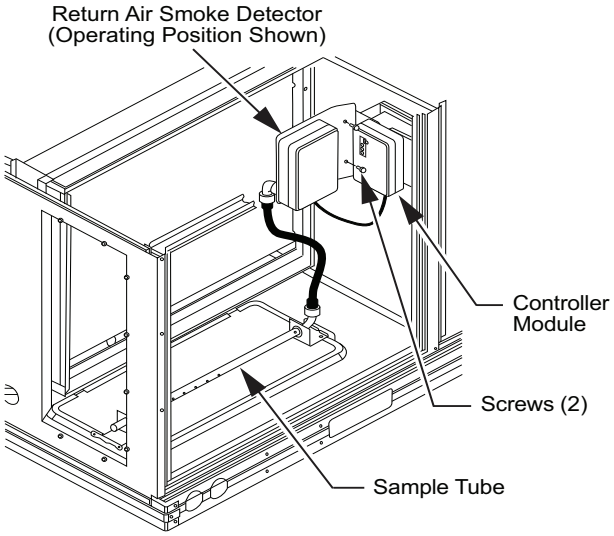

Fig. 36 — Return Air Smoke Detector Operating Position

3. Rotate the detector plate so the sensor is facing outwards and the sampling tube connection is on the bottom (see Fig. 36).
4. Screw the sensor and detector plate into its operating position using screws from Step 1. Ensure the sampling tube connection is on the bottom and the exhaust tube is on the top.
5. Connect the flexible tube on the sampling inlet to the sampling tube on the basepan.
6. For units with an economizer, the sampling tube is integrated into the economizer housing but connecting the flexible tubing to the sampling tube is the same.

FIOP Smoke Detector Wiring and Response

SYSTEMVU™ UNITS

See Fig. 37 for typical SystemVu controller smoke detector wiring

Highlight A

Smoke detector NC contact set will open on smoke alarm condition, de-energizing the ORN conductor.

Highlight B – Using Remote Logic (SystemVu Controller)

Six conductors are provided for field use (see Highlight B) for additional annunciation functions.

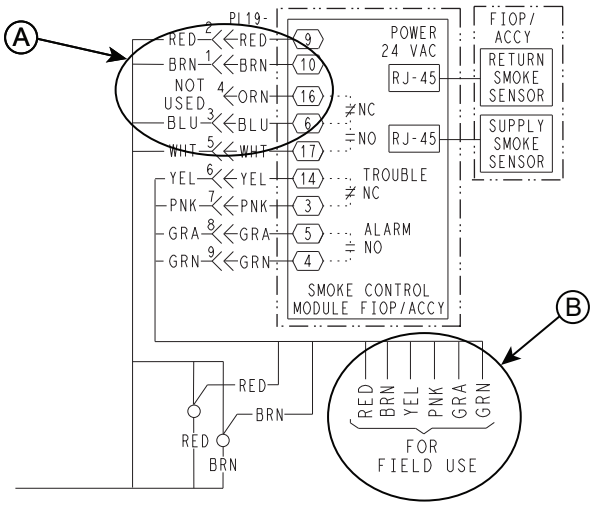

Fig. 37 — Typical Smoke Detector System Wiring, SystemVu Control Units.

ADDITIONAL APPLICATION DATA

Refer to the application data document "Factory Installed Smoke Detectors for Small and Medium Rooftop Units 2 to 25 Tons" for discussions on additional control features of these smoke detectors including multiple unit coordination.

SENSOR AND CONTROLLER TESTS

Sensor Alarm Test

The sensor alarm test checks a sensor's ability to signal an alarm state. This test requires use of a field provided SD-MAG test magnet.

> IMPORTANT: Failure to follow this ALERT can result in an unnecessary evacuation of the facility.
> This test places the duct detector into the alarm state. Unless part of the test, disconnect all auxiliary equipment from the controller before performing the test. If the duct detector is connected to a fire alarm system, notify the proper authorities before performing the test.

SENSOR ALARM TEST PROCEDURE

1. Hold the test magnet where indicated on the side of the sensor housing for seven seconds.
2. Verify that the sensor's Alarm LED turns on.
3. Reset the sensor by holding the test magnet against the sensor housing for two seconds.
4. Verify that the sensor's Alarm LED turns off.

Controller Alarm Test

The controller alarm test checks the controller's ability to initiate and indicate an alarm state.

Controller Alarm Test Procedure

1. Press the controller's test/reset switch for seven seconds.
2. Verify that the controller's Alarm LED turns on.
3. Reset the sensor by pressing the test/reset switch for two seconds.
4. Verify that the controller's Alarm LED turns off.

> IMPORTANT: Failure to follow this ALERT can result in an unnecessary evacuation of the facility.
> This test places the duct detector into the alarm state. Unless part of the test, disconnect all auxiliary equipment from the controller before performing the test. If the duct detector is connected to a fire alarm system, notify the proper authorities before performing the test.

Dirty Controller Test

The dirty controller test checks the controller's ability to initiate a dirty sensor test and indicate its results.

> IMPORTANT: Failure to follow this ALERT can result in an unnecessary evacuation of the facility.
> Pressing the controller's test/reset switch for longer than seven seconds will put the duct detector into the alarm state and activate all automatic alarm responses.

DIRTY CONTROLLER TEST PROCEDURE

1. Press the controller's test/reset switch for two seconds.
2. Verify that the controller's Trouble LED flashes.

Dirty Sensor Test

The dirty sensor test provides an indication of the sensor's ability to compensate for gradual environmental changes. A sensor that can no longer compensate for environmental changes is considered 100% dirty and requires cleaning or replacing. A field provided SD-MAG test magnet must be used to initiate a sensor dirty test. The sensor's Dirty LED indicates the results of the dirty test as shown in Table 3.

> IMPORTANT: Failure to follow this ALERT can result in an unnecessary evacuation of the facility.
> Holding the test magnet against the sensor housing for more than seven seconds will put the duct detector into the alarm state and activate all automatic alarm responses.

Table 3 — Dirty LED Test

FLASHES	DESCRIPTION
1	0-25% dirty. (Typical of a newly installed detector)
2	25-50% dirty
3	51-75% dirty
4	76-99% dirty

DIRTY SENSOR TEST PROCEDURE

1. Hold the test magnet where indicated on the side of the sensor housing for two seconds.
2. Verify that the sensor's Dirty LED flashes.

> IMPORTANT: Failure to follow this ALERT can result in an unnecessary evacuation of the facility.
> Changing the dirty sensor test operation will put the detector into the alarm state and activate all automatic alarm responses. Before changing dirty sensor test operation, disconnect all auxiliary equipment from the controller and notify the proper authorities if connected to a fire alarm system.

Changing the Dirt Sensor Test

By default, sensor dirty test results are indicated by:

- The sensor's Dirty LED flashing.
- The controller's Trouble LED flashing.
- The controller's supervision relay contacts toggle.

The operation of a sensor's dirty test can be changed so that the controller's supervision relay is not used to indicate test results. When two detectors are connected to a controller, sensor dirty test operation on both sensors must be configured to operate in the same manner.

TO CONFIGURE THE DIRTY SENSOR TEST OPERATION

1. Hold the test magnet where indicated on the side of the sensor housing until the sensor's Alarm LED turns on and its Dirty LED flashes twice (approximately 60 seconds).
2. Reset the sensor by removing the test magnet then holding it against the sensor housing again until the sensor's Alarm LED turns off (approximately 2 seconds).

Remote Station Test

The remote station alarm test checks a test/reset station's ability to initiate and indicate an alarm state.

> IMPORTANT: Failure to follow this ALERT can result in an unnecessary evacuation of the facility.
> This test places the duct detector into the alarm state. Unless part of the test, disconnect all auxiliary equipment from the controller before performing the test. If the duct detector is connected to a fire alarm system, notify the proper authorities before performing the test.

SD-TRK4 Remote Alarm Test Procedure

1. Turn the key switch to the RESET/TEST position for seven seconds.
2. Verify that the test/reset station's Alarm LED turns on.
3. Reset the sensor by turning the key switch to the RESET/TEST position for two seconds.
4. Verify that the test/reset station's Alarm LED turns off.

Remote Test/Reset Station Dirty Sensor Test

The test/reset station dirty sensor test checks the test/reset station's ability to initiate a sensor dirty test and indicate the results. It must be wired to the controller as shown in Fig. 38 and configured to operate the controller's supervision relay. For more information, see "Dirty Sensor Test" on page 21.

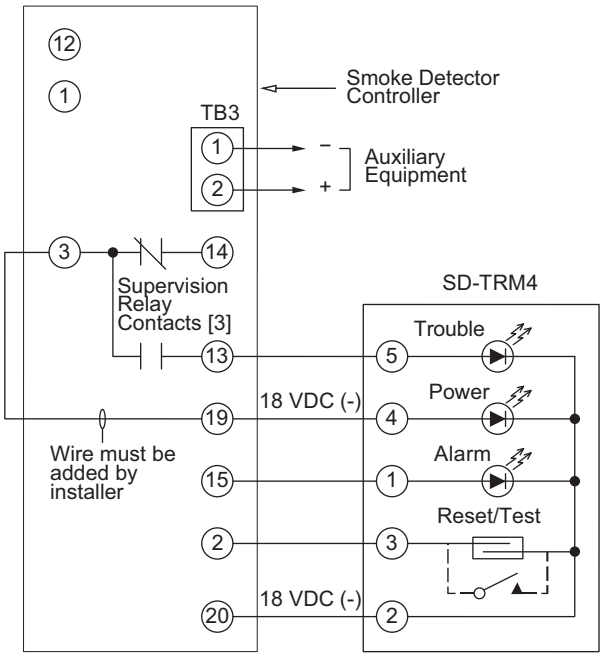

Fig. 38 — Remote Test/Reset Station Connections

> IMPORTANT: Failure to follow this ALERT can result in an unnecessary evacuation of the facility.
> If the test/reset station's key switch is left in the RESET/TEST position for longer than seven seconds, the detector will automatically go into the alarm state and activate all automatic alarm responses.

> IMPORTANT: Failure to follow this ALERT can result in an unnecessary evacuation of the facility.
> Holding the test magnet to the target area for longer than seven seconds will put the detector into the alarm state and activate all automatic alarm responses.

Dirty Sensor Test Using an SD-TRK4

1. Turn the key switch to the RESET/TEST position for two seconds.
2. Verify that the test/reset station's Trouble LED flashes.

Detector Cleaning

CLEANING THE SMOKE DETECTOR

Clean the duct smoke sensor when the Dirty LED is flashing continuously or sooner, if conditions warrant.

> IMPORTANT: OPERATIONAL TEST ALERT
> Failure to follow this ALERT can result in an unnecessary evacuation of the facility.
> If the smoke detector is connected to a fire alarm system, first notify the proper authorities that the detector is undergoing maintenance then disable the relevant circuit to avoid generating a false alarm.

1. Disconnect power from the duct detector then remove the sensor's cover (see Fig. 39).
2. Using a vacuum cleaner, clean compressed air, or a soft bristle brush, remove loose dirt and debris from inside the sensor housing and cover. Use isopropyl alcohol and a lint-free cloth to remove dirt and other contaminants from the gasket on the sensor's cover.

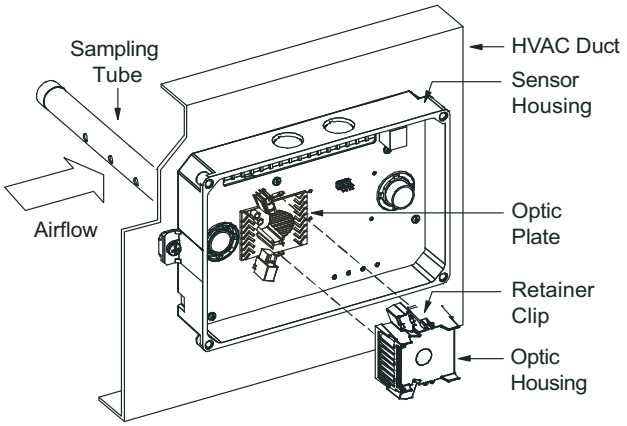

Fig. 39 — Sensor Cleaning Diagram

3. Squeeze the retainer clips on both sides of the optic housing.
4. Lift the housing away from the printed circuit board.
5. Gently remove dirt and debris from around the optic plate and inside the optic housing.
6. Replace the optic housing and sensor cover.
7. Connect power to the duct detector then perform a sensor alarm test.

Indicators

NORMAL STATE

The smoke detector operates in the normal state in the absence of any trouble conditions and when its sensing chamber is free of smoke. In the normal state, the Power LED on both the sensor and the controller are on and all other LEDs are off.

ALARM STATE

The smoke detector enters the alarm state when the amount of smoke particulate in the sensor's sensing chamber exceeds the alarm threshold value (see Table 4). Upon entering the alarm state:

- The sensor's Alarm LED and the controller's Alarm LED turn on.
- The contacts on the controller's two auxiliary relays switch positions.
- The contacts on the controller's alarm initiation relay close.
- The controller's remote alarm LED output is activated (turned on).
- The controller's high impedance multiple fan shutdown control line is pulled to ground Trouble state.

The SuperDuct™ [1] duct smoke detector enters the trouble state under the following conditions:

- A sensor's cover is removed and 20 minutes pass before it is properly secured.
- A sensor's environmental compensation limit is reached (100% dirty).
- A wiring fault between a sensor and the controller is detected.

An internal sensor fault is detected upon entering the trouble state:

- The contacts on the controller's supervisory relay switch positions (see Fig. 40).
- If a sensor trouble, the sensor's Trouble LED the controller's Trouble LED turn on.
- If 100% dirty, the sensor's Dirty LED turns on and the controller's Trouble LED flashes continuously.
- If a wiring fault between a sensor and the controller, the controller's Trouble LED turns on but not the sensor's.

Table 4 — Detector Indicators

CONTROL OR INDICATOR	DESCRIPTION
Magnetic test/ reset switch	Resets the sensor when it is in the alarm or trouble state. Activates or tests the sensor when it is in the normal state.
Alarm LED	Indicates the sensor is in the alarm state.
Trouble LED	Indicates the sensor is in the trouble state.
Dirty LED	Indicates the amount of environmental compensation used by the sensor (flashing continuously = 100%)
Power LED	Indicates the sensor is energized.

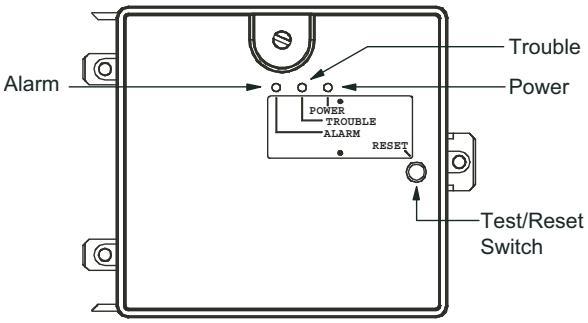

Fig. 40 — Controller Assembly

NOTE: All troubles are latched by the duct smoke detector. The trouble condition must be cleared and then the duct smoke detector must be reset in order to restore it to the normal state.

RESETTING ALARM AND TROUBLE CONDITION TRIPS

Manual reset is required to restore smoke detector systems to Normal operation. For installations using two sensors, the duct smoke detector does not differentiate which sensor signals an alarm or trouble condition. Check each sensor for Alarm or Trouble status (indicated by LED). Clear the condition that has generated the trip at this sensor. Then reset the sensor by pressing and holding the reset button (on the side) for 2 seconds. Verify that the sensor's Alarm and Trouble LEDs are now off. At the controller, clear its Alarm or Trouble state by pressing and holding the manual reset button (on the front cover) for 2 seconds. Verify that the controller's Alarm and Trouble LEDs are now off. Replace all panels.

Troubleshooting

CONTROLLER'S TROUBLE LED IS ON

1. Check the Trouble LED on each sensor connected to the controller. If a sensor's Trouble LED is on, determine the cause and make the necessary repairs.
2. Check the wiring between the sensor and the controller. If wiring is loose or missing, repair or replace as required.

CONTROLLER'S TROUBLE LED IS FLASHING

1. One or both of the sensors is 100% dirty.
2. Determine which Dirty LED is flashing then clean that sensor assembly as described in the detector cleaning section.

SENSOR'S TROUBLE LED IS ON

1. Check the sensor's Dirty LED. If it is flashing, the sensor is dirty and must be cleaned.
2. Check the sensor's cover. If it is loose or missing, secure the cover to the sensor housing.
3. Replace sensor assembly.

SENSOR'S POWER LED IS OFF

1. Check the controller's Power LED. If it is off, determine why the controller does not have power and make the necessary repairs.
2. Check the wiring between the sensor and the controller. If wiring is loose or missing, repair or replace as required.

CONTROLLER'S POWER LED IS OFF

1. Make sure the circuit supplying power to the controller is operational. If not, make sure JP2 and JP3 are set correctly on the controller before applying power.
2. Verify that power is applied to the controller's supply input terminals. If power is not present, replace or repair wiring as required.

REMOTE TEST/RESET STATION'S TROUBLE LED DOES NOT FLASH WHEN PERFORMING A DIRTY TEST, BUT THE CONTROLLER'S TROUBLE LED DOES

1. Verify that the remote test/station is wired as shown in Fig. 38. Repair or replace loose or missing wiring.
2. Configure the sensor dirty test to activate the controller's supervision relay. See "Dirty Sensor Test" on page 21.

SENSOR'S TROUBLE LED IS ON, BUT THE CONTROLLER'S TROUBLE LED IS OFF

Remove JP1 on the controller.

1. Third-party trademarks and logos are the property of their respective owners.

PROTECTIVE DEVICES

Compressor Protection

OVERCURRENT

The compressor has internal line-break motor protection.

OVERTEMPERATURE

The compressor has an internal protector to protect it against excessively high discharge gas temperatures.

HIGH PRESSURE SWITCH

The system is provided with a high pressure switch mounted on the discharge line. The switch is stem-mounted and brazed into the discharge tube. Trip setting is 630 psig ± 10 psig (4344 ± 69 kPa) when hot. Reset is automatic at 505 psig (3482 kPa).

LOW PRESSURE SWITCH

The system is protected against a loss of charge and low evaporator coil loading condition by a low pressure switch located on the suction line near the compressor. The switch is stem-mounted. Trip setting is 54 psig ± 5 psig (372 ± 34 kPa). Reset is automatic at 117 ± 5 psig (807 ± 34 kPa).

EVAPORATOR FREEZE PROTECTION

The system is protected against evaporator coil frosting and low temperature conditions by a temperature switch mounted on the evaporator coil hairpin. Trip setting is 30°F ± 5°F (–1°C ± 3°C). Reset is automatic at 45°F (7°C).

SUPPLY (INDOOR) FAN MOTOR PROTECTION

Disconnect and lockout power when servicing fan motor.

The standard supply fan motor is equipped with internal overcurrent and over-temperature protection. Protection devices reset automatically.

The high static option supply fan motor is equipped with a pilot-circuit Thermix combination over-temperature/over-current protection device. This device resets automatically. Do not bypass this switch to correct trouble. Determine the cause and correct it.

CONDENSER FAN MOTOR PROTECTION

The condenser fan motor is internally protected against over-temperature.

Relief Device

A soft solder joint at the suction service access port provides pressure relief under abnormal temperature and pressure conditions (i.e., fire in building). Protect this joint during brazing operations near this joint.

Control Circuit, 24-V

The control circuit is protected against overcurrent conditions by a circuit breaker mounted on control transformer TRAN. Reset is manual.

GAS HEATING SYSTEM

General

The heat exchanger system consists of a gas valve feeding multiple in-shot burners off a manifold. The burners fire into matching primary tubes. The primary tubes discharge into combustion plenum where gas flow converges into secondary tubes. The secondary tubes exit into the induced draft fan wheel inlet. The induced fan wheel discharges into a flue passage and flue gases exit out a flue hood on the side of the unit. The induced draft fan motor includes a flue gas pressure switch circuit that confirms adequate wheel speed through the Integrated Gas Control (IGC) board. Safety switches include a Rollout Switch (at the top of the burner compartment; see Fig. 41) and a limit switch (mounted through the heat exchanger cover panel, over the tubes) (see Fig. 42).

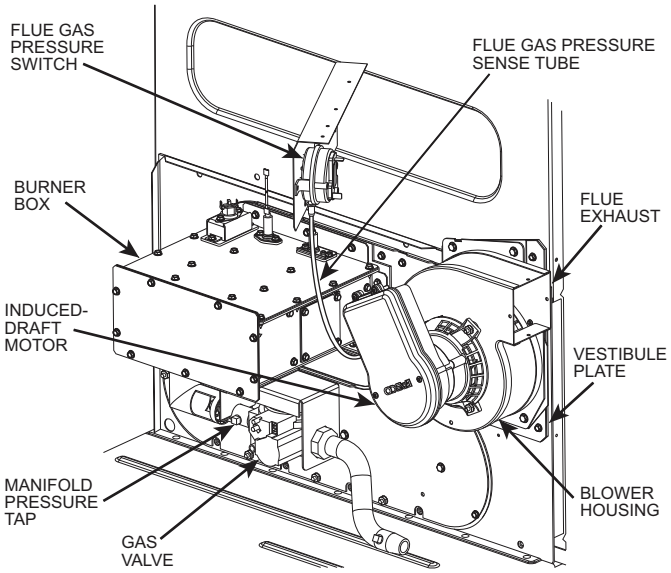

Fig. 41 — Burner Section Details

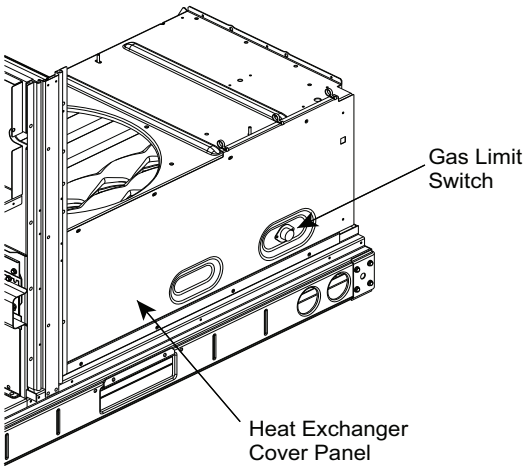

Fig. 42 — Limit Switch Location

Fuel Types and Pressures

NATURAL GAS

The 48JC unit is factory-equipped for use with natural gas (NG) fuel at elevation under 2000 ft (610 m).

⚠ CAUTION

Units can not operated at altitudes greater than 2,000 feet under any circumstances.

Gas line pressure entering the unit's main gas valve must be within specified ranges (see Table 5). Adjust unit gas regulator valve as required or consult local gas utility.

Table 5 — Natural Gas Supply Line Pressure Ranges

UNIT MODEL	UNIT SIZE	MIN	MAX
48JC(G/H)	04, 05, 06	5.0 in. wg (1.24 kPa)	13.0 in. wg (3.23 kPa)

Manifold pressure is factory-adjusted for NG fuel use. Adjust as required to obtain best flame characteristic (see Table 6).

Table 6 — Natural Gas Manifold Pressure

UNIT MODEL	UNIT SIZE	MANIFOLD PRESSURE
48JC(G/H)	04, 05, 06	3.2 in. wg (796 Pa)

Combustion-Air Blower

Clean periodically to assure proper airflow and heating efficiency. Inspect blower wheel every fall and periodically during heating season. For the first heating season, inspect blower wheel every two months to determine proper cleaning frequency.

To access burner section, slide the burner partition panel out of the unit.

To inspect blower wheel, shine a flashlight into draft hood opening. If cleaning is required, remove motor and wheel as follows:

1. Remove the screw at the base of the burner partition panel and slide out the panel (see Fig. 46).
2. Remove the four screws attaching the induced-draft motor housing to the vestibule plate (see Fig. 43).
3. The blower wheel can be cleaned at this point. If additional cleaning is required, continue with Steps 4 and 5.
4. Remove the blower from the motor shaft by removing two setscrews.
5. Removing motor: remove the four screws holding the motor to the mounting plate. Remove the motor cooling fan by removing one setscrew. Remove nuts that hold the motor to the mounting plate.
6. Reverse the procedure outlined above to reinstall the motor.

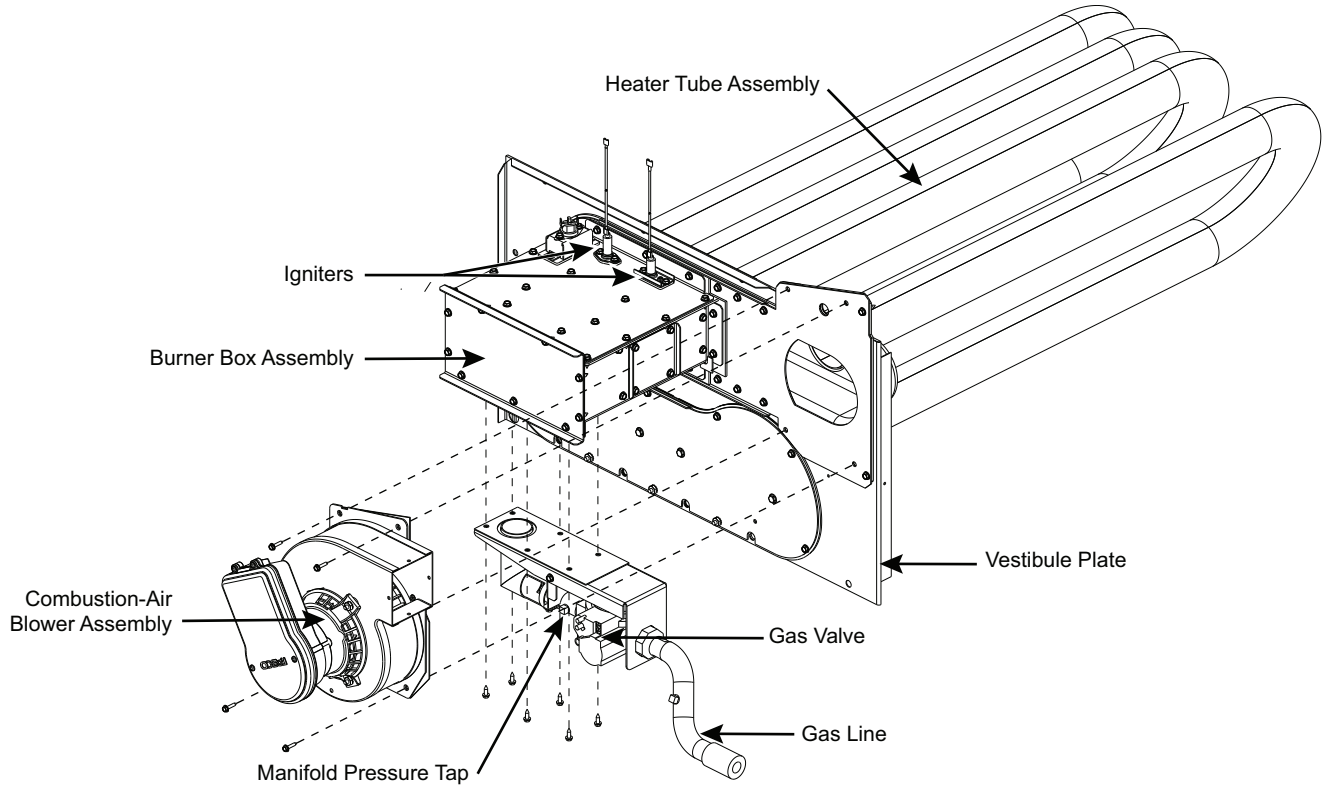

Fig. 43 — Heat Exchanger Assembly

Burners and Igniters

⚠ CAUTION

EQUIPMENT DAMAGE HAZARD

Failure to follow this CAUTION can result in premature wear and damage to equipment.

When working on gas train, do not hit or plug orifice spuds.

BURNERS BOX/HEAT EXCHANGER ASSEMBLY

The main burners are not accessible on any Ultra Low NOx units (low heat/medium heat). No serviceable parts. Replace with new burner box/heat exchanger assembly. This assembly is a single unit and if replacement is required, the entire assembly must be replaced.

Orifice Projection and Placement

Refer to Fig. 44 for maximum projection and placement dimension for orifice face to manifold tube. The manifold, orifice and intake shall be concentric. The orifice must be centered in the intake tube.

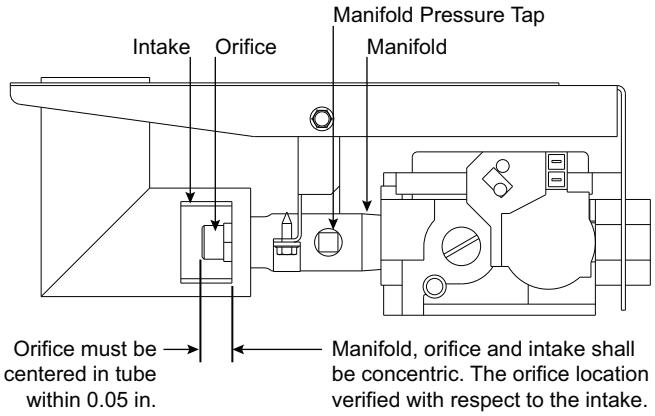

Fig. 44 — Orifice Projection

REMOVAL AND REPLACEMENT OF GAS TRAIN

See Fig. 41, 43, 46, and 45.

1. Shut off manual gas valve.
2. Shut off power to unit.
3. Remove the control box access panel.
4. Remove the control box high voltage cover.
5. Remove the screw at the base of the burner partition panel and slide out the panel (see Fig. 46).
6. Disconnect gas piping at unit gas valve.
7. Remove wires connected to gas valve. Mark each wire.
8. Remove igniter wires and sensor wires at the Integrated Gas Unit Controller (IGC) (see Fig. 45).
9. Remove the six screws attaching the gas valve assembly to the burner box assembly (see Fig. 43).
10. Reverse the procedures outlined above to reinstall the gas valve assembly.

CLEANING AND ADJUSTMENT

1. Remove gas valve assembly from unit as described in "Removal and Replacement of Gas Train" on page 26.
2. If factory orifice has been removed, check that each orifice is tight at its threads into the manifold pipe, and that orifice projection does not exceed maximum value (see Fig. 44).
3. Reinstall gas valve assembly as described in "Removal and Replacement of Gas Train" on page 26.
4. Remove igniter modules from the top of the burner box assembly. Inspect and adjust the spark gap, if necessary (see Fig. 47).

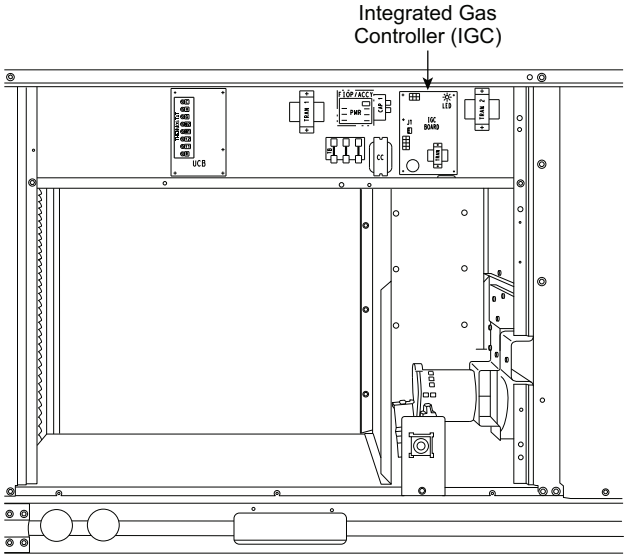

Fig. 45 — Unit Control Box/IGC Location

REMOVING THE HEAT EXCHANGER

The following procedure details the steps to remove the heat exchanged from the unit.

1. Turn off electric power to the unit and shut off the unit's gas supply.
2. Remove the two exterior panels: control box access panel and indoor blower access panel.
3. Remove the unit center post (see Fig. 46).
4. Disconnect the two wires from the gas limit switch.
5. Remove the three interior panels: control box high voltage panel, burner partition panel, and heat exchanger cover panel.
6. Disconnect the wires connected to the gas valve. Mark each wire.
7. Disconnect the igniter wires and sensor wires at the integrated gas controller (IGC).
8. Disconnect a gas pipe union and remove the gas manifold with the gas valve.
9. Remove the six screws attaching the gas valve assembly to the burner box assembly (see Fig. 43).
10. Remove the pressure switch hose from the connection on the flue cover assembly (see Fig. 43).
11. Remove the screws around the vestibule plate.
12. Remove the nuts holding the heat exchanger support rack to the fan deck.
13. Remove the heat exchanger from the unit.

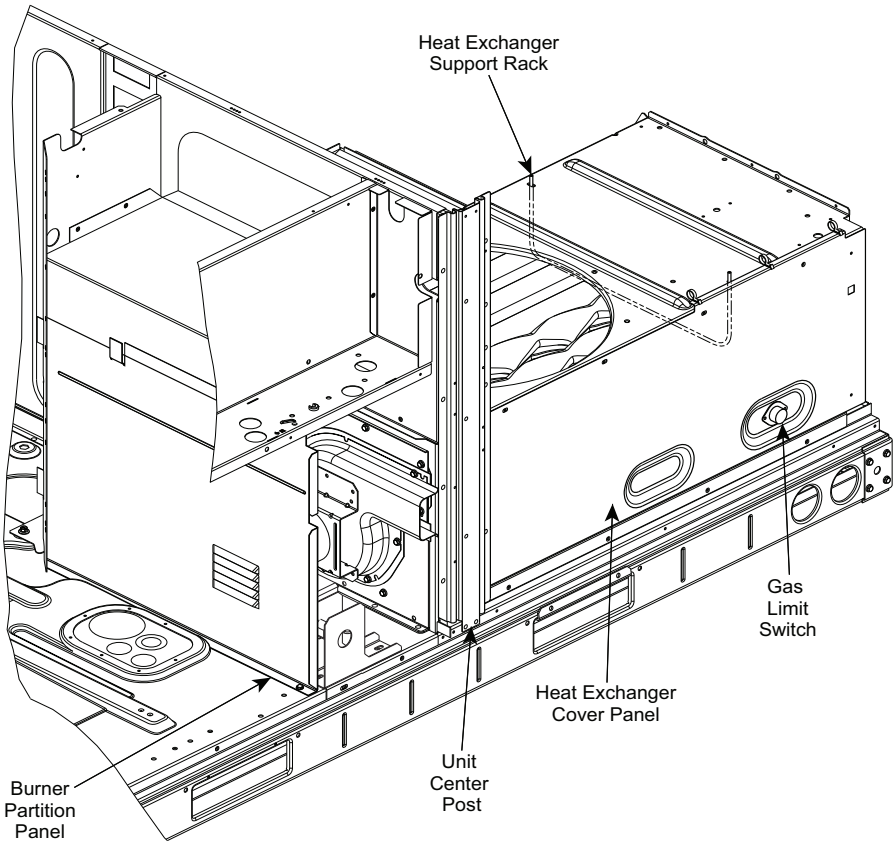

Fig. 46 — Heat Exchanger Access - Internal Panels, Center Post and HX Rack Locations

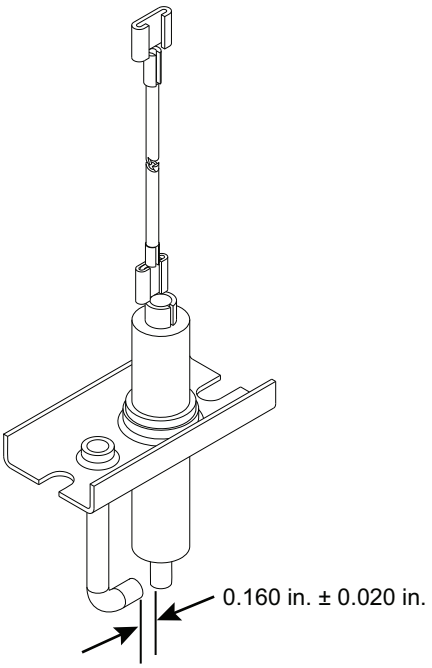

Fig. 47 — Spark Adjustment (Size 04-06)

GAS VALVE

All Ultra-Low NOx models are equipped with a single-stage gas valve. See Fig. 48 for locations of adjustment screws and features on the gas valve.

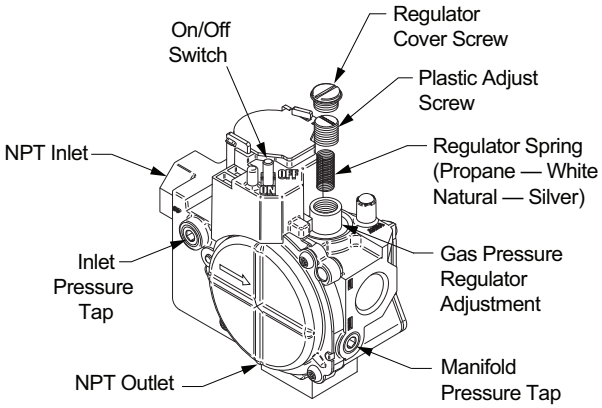

Single Stage

Fig. 48 — Typical Gas Valves

IMPORTANT: Leak check all gas connections including the main service connection, gas valve, gas spuds, and manifold pipe plug. All leaks must be repaired before firing unit.

CHECK UNIT OPERATION AND MAKE NECESSARY ADJUSTMENTS

NOTE: Gas supply pressure at gas valve inlet must be within specified ranges for fuel type and unit size (see Tables 5 and 6).

1. Slide out burner partition panel.
2. Remove manifold pressure tap plug from manifold and connect pressure gauge or manometer (see Fig. 44).
3. Turn on electrical supply.
4. Turn on unit main gas valve.
5. Set room thermostat to call for heat.
6. When main burners ignite, check all fittings, manifold, and orifices for leaks.
7. Adjust high-stage pressure to specified setting by turning the plastic adjustment screw clockwise to increase pressure, counter-clockwise to decrease pressure.
8. Replace regulator cover screw(s) when finished.
9. Observe unit heating operation. Verify that the burner flames are blue in appearance, and that the flames are approximately the same for each burner.
10. Turn off unit, remove pressure manometer and replace the manifold pressure tap plug (see Fig. 44).

LIMIT SWITCH

Remove blower access panel. Limit switch is located on the fan deck (see Fig. 42).

Burner Ignition

Unit is equipped with a direct spark ignition 100% lockout system. The Integrated Gas Unit Controller (IGC) is located in the control box (see Fig. 45). The IGC contains a self-diagnostic LED (light-emitting diode). A single LED on the IGC provides a visual display of operational or sequential problems when the power supply is uninterrupted (see Fig. 49). When a break in power occurs, the IGC will be reset (resulting in a loss of fault history) and the indoor (evaporator) fan ON/OFF times will be reset. The LED error code can be observed through the viewport. During servicing, refer to the label on the control box cover or Table 7 for an explanation of LED error code descriptions.

If lockout occurs, unit may be reset by interrupting power supply to unit for at least 5 seconds.

Table 7 — LED Error Code Descriptions[a]

LED INDICATION	ERROR CODE DESCRIPTION
ON	Normal Operation
OFF	Hardware Failure
1 Flash[b]	Evaporator Fan On/Off Delay Modified
2 Flashes	Limit Switch Fault
3 Flashes	Flame Sense Fault
4 Flashes	4 Consecutive Limit Switch Faults
5 Flashes	Ignition Lockout Fault
6 Flashes	Induced-Draft Motor Fault
7 Flashes	Rollout Switch Fault
8 Flashes	Internal Control Fault
9 Flashes	Software Lockout

NOTE(S):

a. A 3-second pause exists between LED error code flashes. If more than one error code exists, all applicable codes will be displayed in numerical sequence.
b. Indicates a code that is not an error. The unit will continue to operate when this code is displayed.

LEGEND

LED — Light Emitting Diode

IMPORTANT: Refer to Tables 8 and 9 for additional troubleshooting information.

Orifice Replacement

This unit uses orifice type LH32RFnnn (where “nnn” indicates orifice reference size). When replacing unit orifices, order the necessary parts through RCD.

Ensure each replacement orifice is tight as its threads into the manifold pipe, and the orifice projection does not exceed maximum value (see Fig. 44).

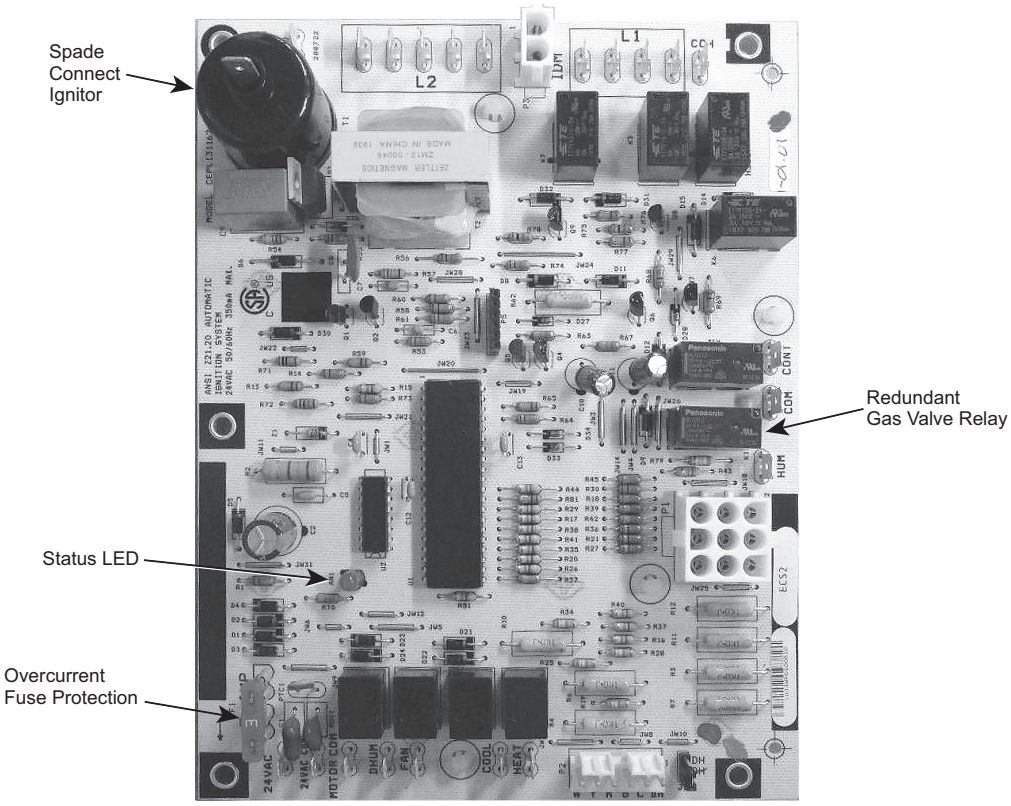

Fig. 49 — Integrated Gas Control (IGC) Board

MINIMUM HEATING ENTERING AIR TEMPERATURE

When operating on first stage heating, the minimum temperature of air entering the dimpled heat exchanger is 50°F continuous and 45°F intermittent for standard heat exchangers and 40°F continuous and 35°F intermittent for stainless steel heat exchangers. To operate at lower mixed-air temperatures, a field-supplied outdoor-air thermostat must be used to initiate both stages of heat when the temperature is below the minimum required temperature to ensure full fire operation. Wire the outdoor-air thermostat OALT (part no. HH22AG106) in series with the second stage gas valve (see Fig. 50). Set the outdoor-air thermostat at 35°F for stainless steel heat exchangers or 45°F for standard heat exchangers. This temperature setting will bring on the second stage of heat whenever the ambient temperature is below the thermostat set point. Indoor comfort may be compromised when heating is initiated using low entering air temperatures with insufficient heating temperature rise.

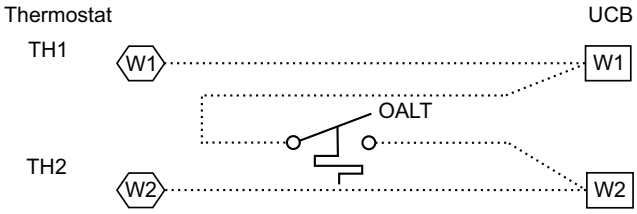

Fig. 50 — OATL Connections

Troubleshooting Heating System

Refer to Tables 8 and 9 for additional troubleshooting topics.

Table 8 — Heating Service Troubleshooting

PROBLEM	CAUSE	REMEDY
Burners Will Not Ignite.	Misaligned spark electrodes.	Check flame ignition and sensor electrode positioning. Adjust as needed.
	No gas at main burners.	Check gas line for air, purge as necessary. After purging gas line of air, allow gas to dissipate for at least 5 minutes before attempting to relight unit.
		Check gas valve.
	Water in gas line.	Drain water and install drip leg to trap water.
	No power to furnace.	Check power supply, fuses, wiring, and circuit breaker.
	No 24-v power supply to control circuit.	Check transformer. Transformers with internal overcurrent protection require a cool down period before resetting.
	Miswired or loose connections.	Check all wiring and wire nut connections.
	Burned-out heat anticipator in thermostat.	Replace thermostat.
	Broken thermostat wires.	Run continuity check. Replace wires, if necessary.
Inadequate Heating.	Dirty air filter.	Clean or replace filter as necessary.
	Gas input to unit too low.	Check gas pressure at manifold. Clock gas meter for input. If too low, increase manifold pressure, or replace with correct orifices.
	Unit undersized for application.	Replace with proper unit or add additional unit.
	Restricted airflow.	Clean filter, replace filter, or remove any restrictions.
	Blower speed too low.	Use high speed tap, increase fan speed, or install optional blower, as suitable for individual units.
	Limit switch cycles main burners.	Check thermostat heat anticipator settings, and temperature rise of unit. Adjust as needed.
	Too much outdoor air.	Adjust minimum position.
		Check economizer operation.
Poor Flame Characteristics.	Incomplete combustion (lack of combustion air) results in: Aldehyde odors, CO, sooting flame, or floating flame.	Check all screws around flue outlets and burner compartment. Tighten as necessary.
		Cracked heat exchanger.
		Overfired unit — reduce input, change orifices, or adjust gas line or manifold pressure.
		Check vent for restriction. Clean as necessary.
		Check orifice to burner alignment.
Burners Will Not Turn Off.	Unit is locked into Heating mode for a one minute minimum.	Wait until mandatory one-minute time period has elapsed or reset power to unit.

Table 9 — IGC Board LED Alarm Codes[a,b]

FLASH CODE[c,d]	SYMPTOM	CAUSE	REMEDY
ON	Normal Operation	—	—
OFF	No Power or Hardware Failure	Loss of power to control module (IGC)	Check 5-amp fuse on the IGC, power to unit, 24V circuit breaker, and transformer. Units without a 24V circuit breaker have an internal overload in the 24V transformer. If the overload trips, allow 10 minutes for automatic reset.
1 Flash	Check Fuse, Low Voltage Circuit	Fuse is blown or missing, or short circuit in secondary (24 VAC) wiring.	Replace fuse if needed. Verify no short circuit in low voltage (24 VAC) wiring.
2 Flashes	Limit Switch Fault	High temperature limit switch is open.	Check the operation of the indoor (evaporator) fan motor. Ensure that the supply-air temperature rise is in accordance with the range on the unit nameplate. Clean or replace filters.
3 Flashes	Flame is Sense Fault	The IGC sensed flame that should not be present.	Reset unit. If problem persists, replace the IGC board.
4 Flashes	Four Consecutive Limit Switch Faults	Inadequate airflow to unit.	Check the operation of the indoor (evaporator) fan motor and that supply-air temperature rise agrees with range on the unit nameplate information.
5 Flashes	Ignition Lockout Fault	Unit unsuccessfully attempted ignition for 4 times.	Check igniter and flame sensor electrode spacing, gaps, etc. Ensure that flame sense and ignition wires are properly terminated. Verify that unit is obtaining proper amount of gas.
6 Flashes	Pressure Switch Fault	Open pressure switch.	Verify wiring connections to pressure switch and inducer motor. Verify pressure switch hose is tightly connected to both inducer housing and pressure switch. Verify inducer wheel is properly attached to inducer motor shaft. Verify inducer motor shaft is turning. In 460V units check the transformer designed for the inducer motor is operational. Also check the fuses for the inducer motor transformer (460V units only).
7 Flashes	Burner Thermal Switch Fault	Burner thermal switch is open	The burner thermal switch will automatically reset, but IGC will continue to lockout unit. Check any possible blockage in the access panel louver, intake tube connected to the burner box, and the flue gas exhaust. Check gas valve operation. Ensure that induced-draft blower wheel is properly secured to motor shaft. Inspect the burner mesh inside the burner box by opening the side window on the burner box. Reset the unit disconnect.
8 Flashes	Internal Control Fault	Microprocessor has sensed an error in the software or hardware.	If error code is not cleared by resetting unit power, replace the IGC board.

NOTE(S):

a. Alarm codes on the IGC will be lost if power to the unit is interrupted.
b. If the pressure switch is stuck closed on a W1 call, then the unit will sit idle and do nothing with no fault on the IGC.
c. There is a 3-second pause between alarm code displays.
d. If more than one alarm code exists, all applicable alarm codes will be displayed in numerical sequence.

LEGEND

IGC — Integrated Gas Unit Control
LED — Light-Emitting Diode

SYSTEMVU CONTROL SYSTEM

The SystemVu™ control is a comprehensive unit-management system. The control system is easy to access, configure, diagnose and troubleshoot.

The SystemVu control system is fully communicating and cable-ready for connection to the Carrier Comfort Network® (CCN), Carrier i-Vu®, and Third Party BACnet[1] building management systems. The control provides high-speed communications for remote monitoring via the Internet. Multiple units can be linked together (and to other Direct Digital Control (DDC) equipped units) using a 3-wire communication bus.

The SystemVu control system is easy to access through the use of a integrated display module. A computer is not required for start-up. Access to control menus is simplified by the ability to quickly select from 7 main menu items. An expanded readout provides detailed explanations of control information. Only six buttons are required to maneuver through the entire controls menu. The display readout is designed to be visible even in bright sunlight (see Fig. 51).

SystemVu Interface

This integrated device is the keypad interface used to access the control information, read sensor values, and test the unit. The interface is located in the main control box.

1. Third-party trademarks and logos are the property of their respective owners.

Through the SystemVu interface, the user can access all of the inputs and outputs to check on their values and status, configure operating parameters, and evaluate the current decision status for operating modes. The control also includes an alarm history which can be accessed from the display. The user can access a built-in test routine that can be used at start-up commissioning and troubleshooting.

Air Temperature Sensors

The SystemVu controller uses thermistors to sense temperatures used to control operation of the unit. Air temperatures are measured with 10k thermistors. This includes supply-air temperature (SAT), outdoor-air temperature (OAT) and return-air temperature (RAT) sensors. See Fig. 52 for location of these sensors.

Additional SystemVu Installation and Troubleshooting

Additional installation, wiring and troubleshooting information for the SystemVu Controller can be found in the following manual: *48/50JC 04-06 Ultra High Efficiency Single Package Rooftop Units with SystemVu™ Controls Version X.X Controls, Start-up, Operation and Troubleshooting Instructions*.

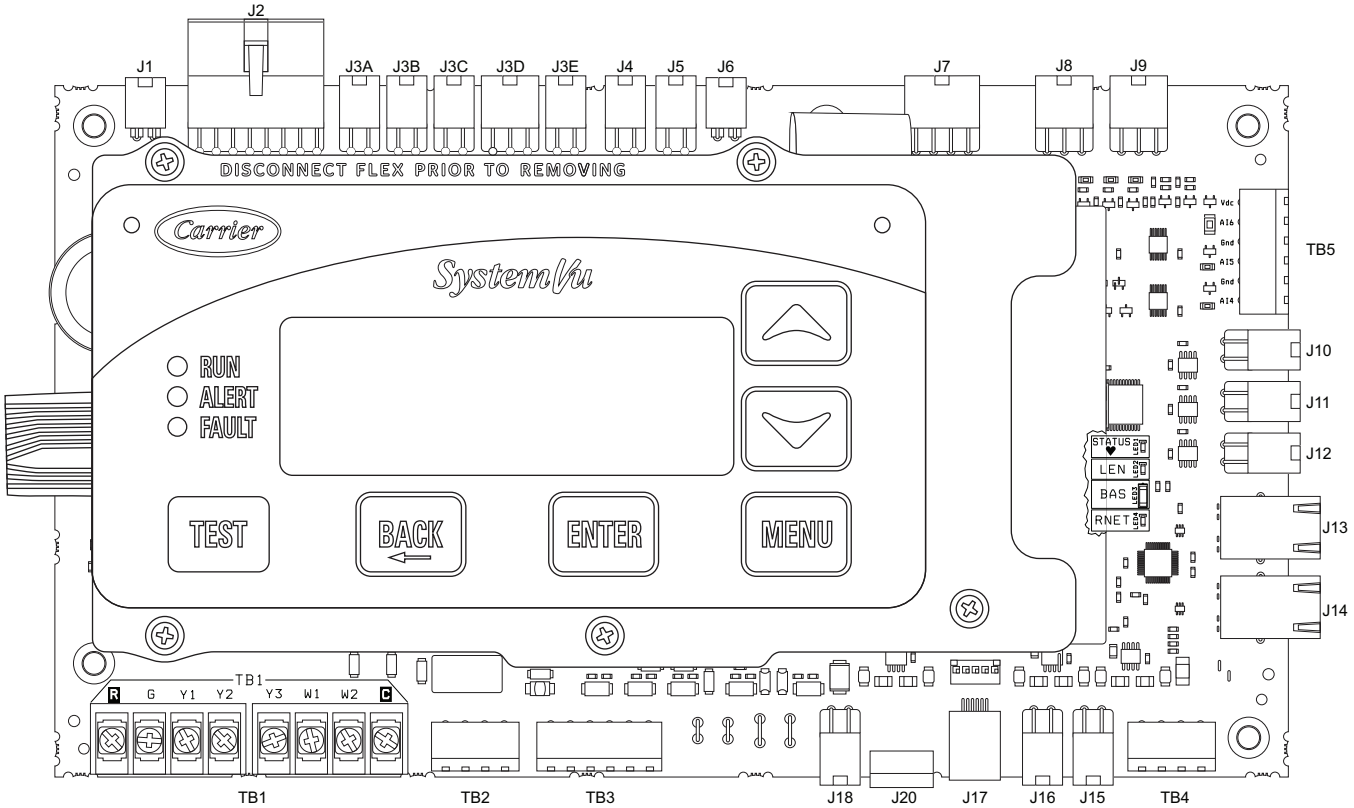

Fig. 51 — SystemVu Control

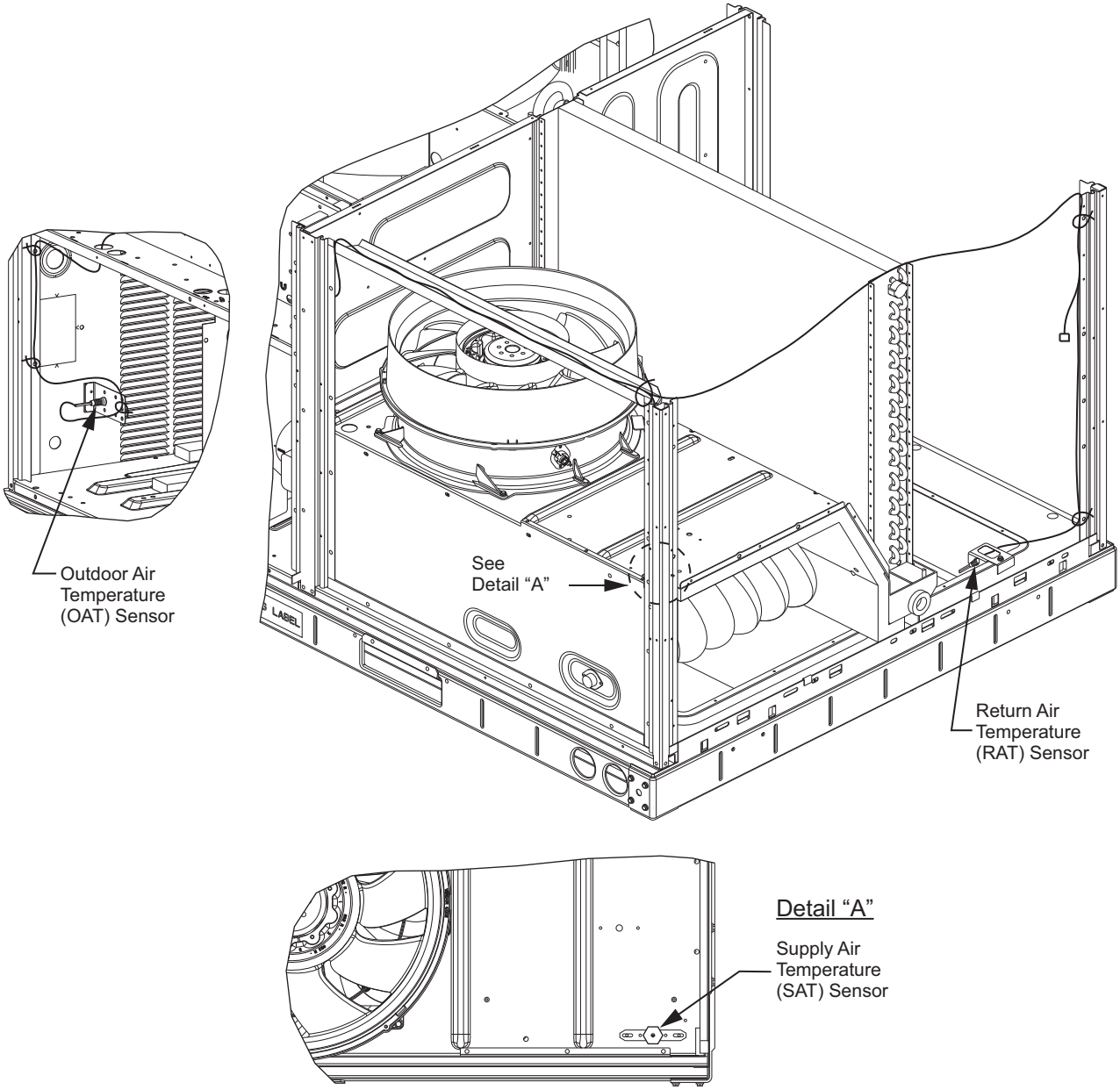

Fig. 52 — Locations of Air Temperature Sensors

COMPRESSOR VFD

The 48JC units are equipped with a variable speed compressor. To control this compressor a Variable Frequency Drive (VFD) is required. This VFD does not look like the typical VFD the industry might be used to. This VFD is not packaged into its own housing to appear as a single component, it is comprised of five electronic components mounted in the unit's control box for the Control box layout (see Fig. 53). The five components are: The main drive board, filter board, capacitor board, choke, and converter board. On 575 volt units the filter board and capacitor board are replaced with three-phase line reactor.

Drive Board

The drive board is the heart of the VFD. It contains the safety logic and the power conversations needed for the variable speed operation. This drive board will take in the 60 Hz supply voltage and modify it to drive the speed of the compressor, this is done with voltage and frequency. The drive board is responsible for monitoring the safety high pressure switch (HPS) and ensure the compressor is immediately turned off upon HPS trip. There is a discharge line thermistor (DLT) also provided that the drive board monitors. This is for situations where there are high line temperatures without the pressure being high enough to indicate a problem. The drive board has built in logic independent of the SystemVu logic to fold back the speed of the compressor in the event of a high current or high temperature situation. This high current is determine based on the speed ranges, so not just one current limit. The drive board has its own built in startup and speed ramp protections, however these are smaller than what the SystemVu controller uses. Review the Compressor Control section for SystemVu controller start and ramp functions found in the 48/50JC 04-06 Ultra High Efficiency Single Package Rooftop Units with SystemVu™ Controls Version X.X Controls, Start-up, Operation and Troubleshooting Instructions manual. There is a heat sink mounted on the back of this drive board to help cool the electronics. The drive board only communicates via Modbus and has local LEDs to show status and errors. The converter board will be used as the primary interface to this drive board, so refer to that section for more details. See Fig. 54 and Table 10 on page 35 for more details on the drive board.

⚠ CAUTION

UNIT DAMAGE HAZARD

Do not bypass the Drive board and pass the standard power supply to the compressor, damage may occur.

⚠ CAUTION

UNIT DAMAGE HAZARD

If replacing the Drive board remove the whole assembly (heat sink and electronic board together). Never separate this assembly on the replacement part.

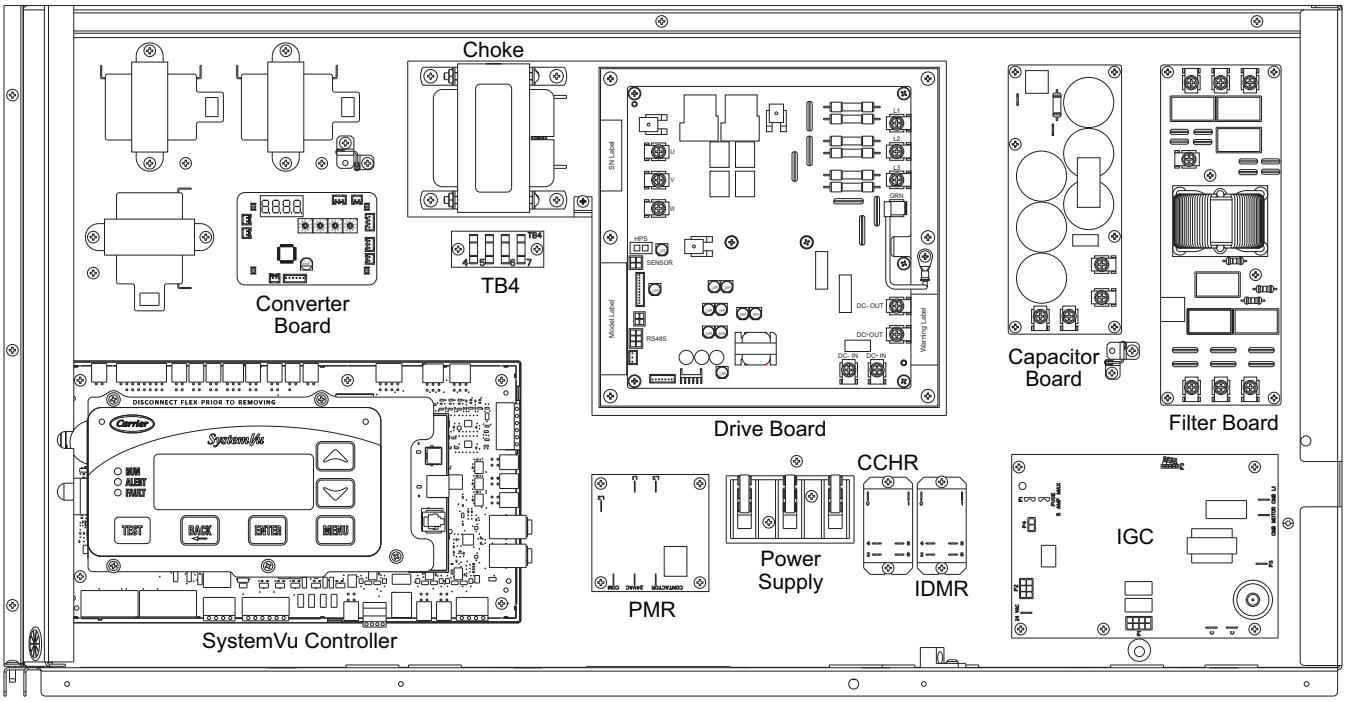

Fig. 53 — Control Box Layout

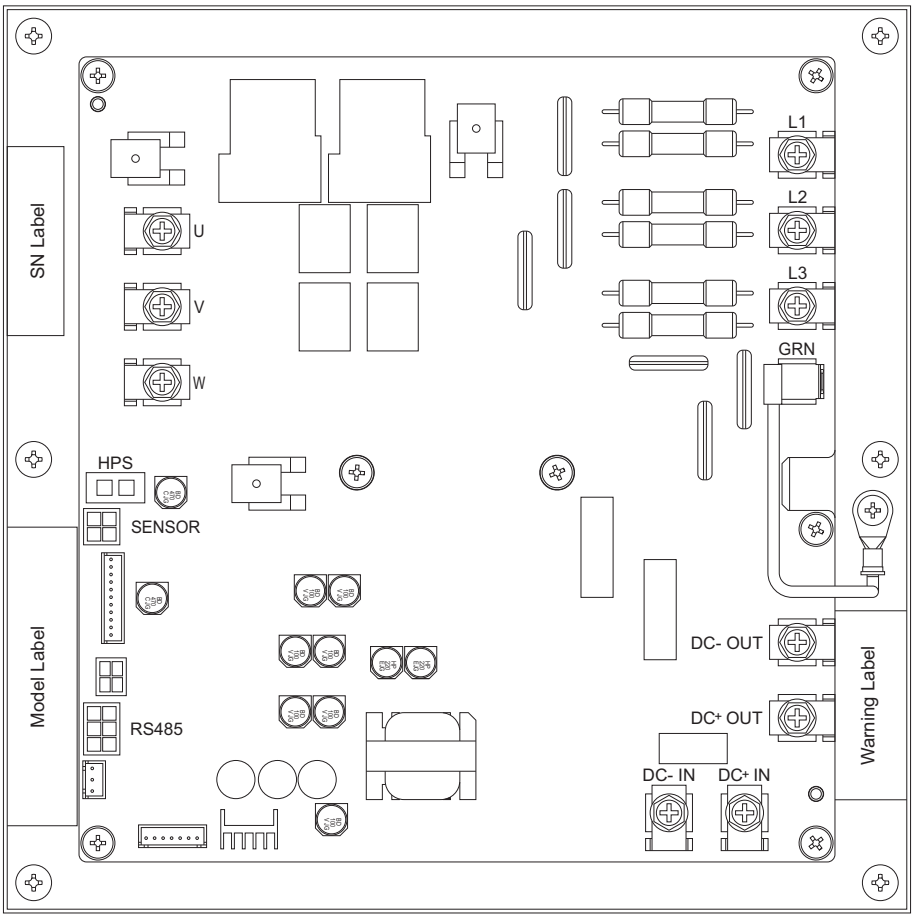

Fig. 54 — Drive Board

Table 10 — Drive Board Inputs/Outputs

TERMINAL LABEL	DESCRIPTION	TYPE	CONNECTOR
HPS	High Pressure switch input	3.3 vdc	2 Pins
SENSOR	DLT sensor input	10k thermistor	Pins 1 and 2 (inner 2 pins)
RS485	Modbus communication with the converter board	RS485 Communication	Pins 1,4, and 5
L1, L2, L3	Supply Power from the filter board	AC high voltage	3x screw terminals
GRN	Supply Ground	Chassis Ground	2x 1/4-in. Quick Connect
DC+OUT, DC-OUT	DC bus out to capacitor board	DC high voltage	2x 1/4-in. Quick Connect
DC+IN, DC-IN	DC bus in from the capacitor board	DC high voltage	2x 1/4-in. Quick Connect
U, V, W	Output to the compressor	AC High voltage	3x screw terminals

Converter Board

The converter board is the primary interface for troubleshooting as well as SystemVu's interface to the VFD. The purpose of the converter board is to provide an interface to the drive board while converting the SystemVu control signal into the Modbus communication the drive board requires. The converter board is also responsible for providing configurations to the drive board. This is done through the four rotary switches mounted on the board. The required settings are listed below and printed on the unit schematics. See Fig. 55, Table 11, and Table 12 on page 36 for more details on the converter board.

The converter board has a four-digit display to provide feedback for troubleshooting. It will read "IDLE" when in standby waiting for a signal, and the software version "S##.#" will alternate with "IDLE" during standby. It will show the actual compressor running RPM while performing cooling. It will display an "E-##" if an error occurs in the converter board or drive board. Use the converter board error code table (see Table 14) for troubleshooting. If the drive board is folding back the speed to protect the current the running RPM will alternate with "Sd##" where the number indicates the reason for fold back. See Table 13 for the foldback codes.

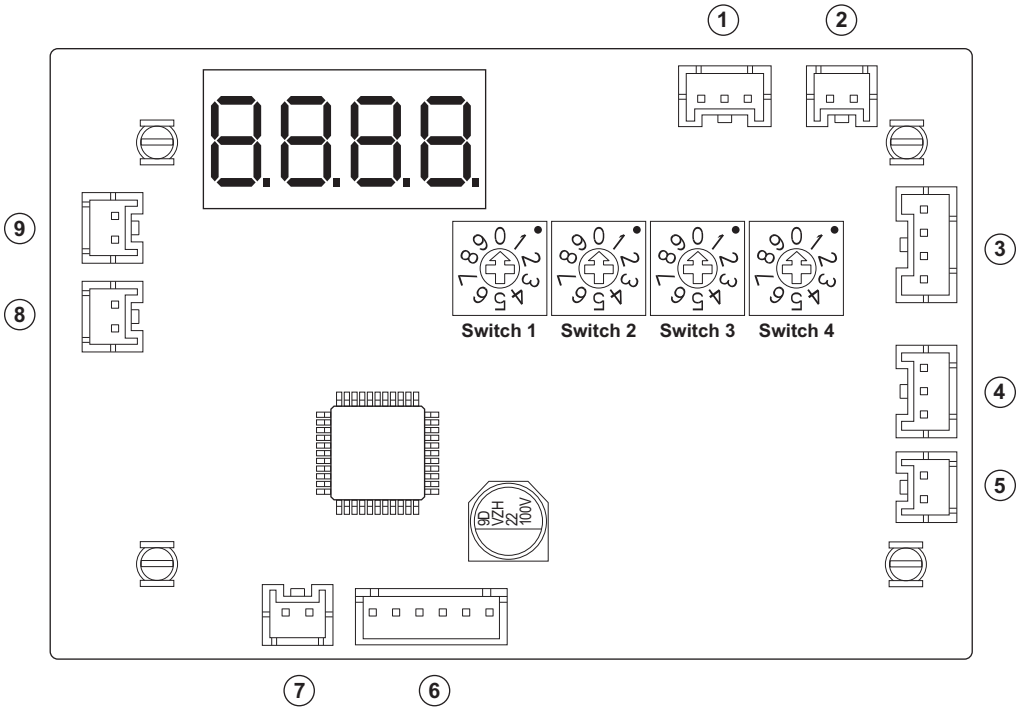

Fig. 55 — Converter Board

Table 11 — Converter Board Inputs/Outputs

REFERENCE NUMBER	DESCRIPTION	TYPE	CONNECTOR
1	Not used	—	—
2	Not used	—	—
3	Modbus communication with the drive board	RS485 Communication	Pins 1,2, and 3
4	Input control from SystemVu	PWM signal	Pins 1 and 3
5	Start/Stop input	24vac	Pins 1 and 2
6	Not used	—	—
7	Power supply	24vac	Pins 1 and 2
8	Not used	—	—
9	Not used	—	—

Table 12 — Converter Board Switch Settings

SIZE	SWITCH 1	SWITCH 2	SWITCH 3	SWITCH 4
04 (3 Ton)	3	3	1	1
05 (4 Ton)	3	4	1	1
06 (5 Ton)	3	5	5	1

Table 13 — Converter Board Foldback Codes

FOLDBACK CODE	FOLDBACK DESCRIPTION
Sd01	Configuration Status (EEPROM/FLASH)
Sd02	Speed Foldback Flag (Output Voltage Limit)
Sd03	PFC Temperature Foldback Status
Sd04	AC Input Current Foldback Status
Sd05	Compressor Phase Current Foldback Status
Sd06	Compressor Power Module Temperature Foldback Status
Sd07	DLT Temperature Foldback Status
Sd08	Output Capacity Foldback Status
Sd09	Autosaved Data Status
Sd10	Speed Foldback Flag (Torque Limit)

Table 14 — Converter Board Error Codes

ERROR CODE	FAULT DESCRIPTION	DRIVE MODBUS REGISTER	ACTION/CAUSE
E-01	Compressor Phase Over Current	Reg.78|80 Bit0	1. Check the U/V/W connections on the drive side. 2. Check the compressor motor windings. 3. Check the compressor is operating within specified limits. 4. Sensor on Drive not reading properly - Replace Drive.
E-02	AC Input Over Current (SW)	Reg.78|80 Bit1	1. Check that the line voltage is no more than 15% below the specified voltage for the drive. Check the line voltage for noise. 2. Check the compressor is operating within specified limits. 3. If the problem persists, then it is possibly a drive component issue. Replace the drive.
E-03	DC Bus Over Voltage (SW)	Reg.78|80 Bit2	1. Check that the line voltage is no more than 15% above the specified voltage for the drive. 2. Check the DC bus voltage if it is >385 vdc. 3. Check the compressor is operating within the specified limits. 4. If the problem still persists, then it is possibly a drive component issue. Replace the drive.
E-04	DC Bus Under Voltage	Reg.78|80 Bit3	1. Check that the line voltage is no more than 15% below the specified voltage for the drive. 2. Check the DC bus voltage if it is <385 vdc. 3. Check the compressor is operating within the specified limits. 4. If the problem still persists, then it is possibly a drive component issue. Replace the drive.
E-05	AC Input Over Voltage	Reg.78|80 Bit4	1. Check that the line voltage is no more than 15% above the specified voltage for the drive. 2. Check the DC bus voltage if it is >385 vdc. 3. Check the compressor is operating within the specified limits. 4. If the problem still persists, then it is possibly a drive component issue. Replace the drive.
E-06	AC Input Under Voltage	Reg.78|80 Bit5	1. Check that the line voltage is no more than 15% below the specified voltage for the drive. 2. Check the DC bus voltage if it is <385 vdc. 3. Check the compressor is operating within the specified limits. 4. If the problem still persists, then it is possibly a drive component issue. Replace the drive.
E-07	Inverter Desaturation	Reg.78|80 Bit6	1. Check if all input cables are connected or any line is missing. 2. Check that the line voltage is no more than 15% below the specified voltage for the drive. If the problem still persists, then it is possibly a drive component issue. Replace the drive.
E-09	High Pressure Switch Fault	Reg.78|80 Bit8	1. Condensing Pressure beyond limit. system issue. 2. Check the high pressure switch.
E-12	Compressor Power Module Over Temp	Reg.78|80 Bit11	1. Verify proper airflow over the heat-sink of the drive. Remove any obstructions. 2. Check that the compressor is operating within specified limits. 3. Check the mounting screws on the drive, make sure they are tight. If the fault, persists replace the drive.
E-13	PFC-IGBT Over Temp	Reg.78|80 Bit12	1. Verify proper airflow over the heat-sink of the drive. Remove any obstructions. 2. Check that the compressor is operating within specified limits. 3. Check the mounting screws on the drive, make sure they are tight. If the fault, persists replace the drive.
E-14	Compressor Startup Fault	Reg.78|80 Bit13	1. Cycle power on the drive. 2. If the problem persists replace the drive.
E-17	DC Voltage Low	Reg.79|81 Bit0	1. Check that the line voltage is no more than 15% below the specified voltage for the drive. 2. Check the DC bus voltage if it is <385 vdc. 3. Check the compressor is operating within specified limits. 4. If the problem still persists, then it is possibly a drive component issue. Replace the drive.
E-18	Compressor Phase Over Current (Intermediate)	Reg.79|81 Bit1	1. Check the U/V/W connections on the drive side. 2. Check the compressor motor windings 3. Check the compressor is operating within specified limits. 4. Sensor on Drive not reading properly - Replace Drive.
E-19	Compressor Phase Current Foldback Timeout	Reg.79|81 Bit2	Check if the compressor is operating outside the specified speed range.

Table 14 — Converter Board Error Codes (cont)

ERROR CODE	FAULT DESCRIPTION	DRIVE MODBUS REGISTER	ACTION/CAUSE
E-20	Compress Power Module Temperature Foldback Timeout	Reg.79|81 Bit3	Compressor phase current ≥ foldback protection value (for 30 seconds). Check if the compressor is operating outside the specified speed range.
E-21	AC Input Current Foldback Timeout	Reg.79|81 Bit4	1. Check that the line voltage is no more than 15% below the specified voltage for the drive. 2. Check the compress is operating within specified limits. 3. If problem persists, replace the drive.
E-22	DLT Temperature Timeout	Reg.79|81 Bit5	1. Check the DLT/Scroll Thermistor connection. 2. Check the compressor is operating within specified limits.
E-23	Auto Config Communication Timeout	Reg.79|81 Bit6	Baud rate or Parity of the system controller not matching with drive. Check whether system controller is working, the Power Cycle the drive.
E-24	Modbus Communication Lost	Reg.79|81 Bit7	1. Check Modbus communication cable connections. 2. Check the communications parameters are set right. 3. Power cycle the drive. 4. If problem persists. replace the drive.
E-25	DLT High Temp	Reg.79|81 Bit8	1. Check the DLT/Scroll Thermistor connection. 2. Check the compressor is operating within specified limits.
E-27	Board Temperature High	Reg.79|81 Bit10	1. Verify proper airflow over the heatsink of the drive. Remove any obstructions. 2. Check that the compressor is operating within specified limits. 3. Check the mounting screws on the drive, make sure they are tight. 4. If the problem still persists replace the drive.
E-28	Compressor Power Module Temperature High	Reg.79|81 Bit11	1. Verify proper airflow over the heatsink of the drive. Remove any obstructions. 2. Check that the compressor is operating within specified limits. 3. Check the mounting screws on the drive, make sure they are tight. 4. If the problem still persists replace the drive.
E-31	Comms to DSP Communication Lost	Reg.79|81 Bit14	1. Check Modbus communication cable connections. 2. Check the communication parameters are set right. 3. Power cycle the drive. 4. If problem persists replace the drive.
E-33	Compressor Phase Current Imbalance	Reg.82|84 Bit0	1. Verify proper airflow over the heatsink of the drive. Remove any obstructions. 2. Check that the compressor is operating within specified limits. 3. Check the mounting screws on the drive, make sure that they are tight. 4. If the problem still persists replace the drive.
E-35	Micro Electronic Fault	Reg.82|84 Bit2	1. DSP self-check error, restart the drive fault should go away. 2. If problem persists replace the drive.
E-39	Compressor Model Configuration Error	Reg.82|84 Bit6	1. Compressor model and configuration code do not match. 2. Check the setting on the Digital switches
E-40	High Pressure Sensor Type Configuration Error	Reg.82|84 Bit7	1. Pressure sensor and configuration code do not match. 2. Check the setting on the Digital switches
E-41	Compressor U-Phase OverCurrent/Sensor Fault	Reg.82|84 Bit8	1. Check the U/V/W connections on the drive side and compressor side. 2. Check the compressor motor windings.
E-42	Compressor V-Phase OverCurrent/Sensor Fault	Reg.82|84 Bit9	1. Check the U/V/W connections on the drive side and compressor side. 2. Check the compressor motor windings.
E-43	Compressor W-Phase OverCurrent/Sensor Fault	Reg.82|84 Bit10	1. Check the U/V/W connections on the drive side and compressor side. 2. Check the compressor motor windings.
E-51	DLT Temp Sensor Open or Short Fault	Reg.83|85 Bit2	1. Check the DLT/Scroll Thermistor connection. 2. Check the compressor is operating within specified limits.
E-54	Power Module Temperature Sensor Open/Short Fault	Reg.83|85 Bit5	1. Verify proper airflow over the heatsink of the drive. Remove any obstructions. 2. Check that the compressor is operating within specified limits. 3. Check the mounting screws on the drive, make sure that they are tight. 4. If the problem still persists replace the drive.
E-55	PFC-IGBT Temperature Sensor Fault Open/Short Fault	Reg.83|85 Bit6	Temperature sensing device on the drive are possibly defective. If problem persists replace the drive.

Table 14 — Converter Board Error Codes (cont)

ERROR CODE	FAULT DESCRIPTION	DRIVE MODBUS REGISTER	ACTION/CAUSE
E-62	Stator Heater Overcurrent	Reg.83|85 Bit13	Compress windings are drawing more current than expected in stator heater mode. If problem persist contact application engineer.
E-64	Fault Limit Lockout	Reg.83|85 Bit15	10 lockout errors in 10 hours. Troubleshoot the original errors.
E-66	Analog Communication Fault		Check the connection between the Converter board and the drive.
E-67	Configuration Setup Fault		1. Check the Digital switches settings. 2. Replace the Converter board.

Filter Board

The Filter board is a support board that helps filter out noise and spikes on the voltage supplied to the Drive board. For troubleshooting, make sure the AC voltage is the same going into the board and coming out of the board. See Fig. 56 and Table 15 for more details on the filter board.

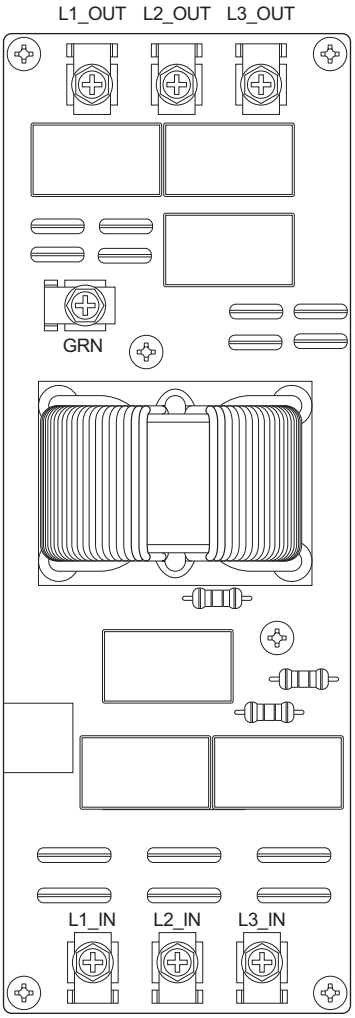

Fig. 56 — Filter Board

Table 15 — Filter Board Inputs/Outputs

TERMINAL LABEL	DESCRIPTION	TYPE	CONNECTOR
L1_IN, L2_IN, L3_IN	Supply Power	AC High voltage	3x screw terminals
GRN	Supply Ground	Chassis Ground	1x screw terminal
L1_OUT, L2_OUT, L3_OUT	Supply Power to Drive board	AC High voltage	3x screw terminals

Capacitor Board

⚠ WARNING

ELECTRICAL SHOCK HAZARD

Failure to follow this warning could result in personal injury, or death.

Unit is equipped with capacitors that take time to discharge after power disconnect. Before performing service or maintenance operations on this unit, ensure the power has been off to the unit and locked out for at least 5 minutes. After removal of the high voltage cover, ensure all LED lights are off.

The Capacitor board is a support board that helps stabilize the DC bus used by the drive board. There is a green LED mounted on the board to indicate it has live voltage. The polarity is sensitive since this is a DC voltage. Inspect the Capacitors for bulging when troubleshooting. See Fig. 57 and Table 16 below for more details on the capacitor board.

LINE REACTOR

The line reactor is only used on 575 volt units. It is mounted and used in place of the filter board and capacitor board. The line reactor protects the drive board from noise and spikes on the supply voltage. This is a three-phase line reactor so there is a filter for each line of the three-phase power. There are two terminals for each phase and not direction sensitive. For troubleshooting, check the voltage for each phase going in and out of the line reactor to ensure they are the same.

CHOKE

The choke is the heaviest component and used to protect the DC bus from voltage spikes. This is wired between the +DC output of the drive board and the +DC input to the capacitor board. It is not direction sensitive so the wires can be swapped. Make sure the voltage is the same leaving the drive board as entering the capacitor board.

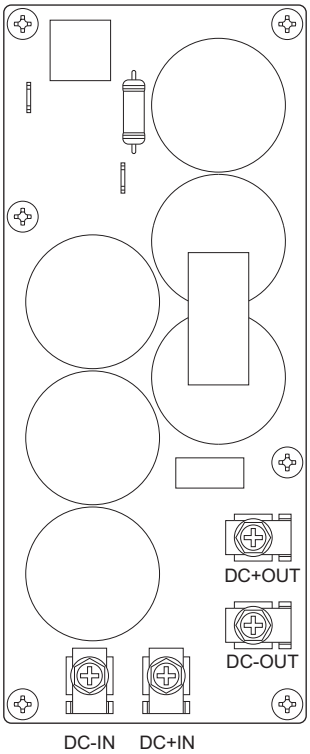

Fig. 57 — Capacitor Board

Table 16 — Capacitor Board Inputs/Outputs

TERMINAL LABEL	DESCRIPTION	TYPE	CONNECTOR
DC+OUT, DC-OUT	DC Bus Out to Drive Board	DC High voltage	2x 1/4-in. Quick Connect
DC+IN, DC-IN	DC Bus In from Drive Board	DC High voltage	2x 1/4-in. Quick Connect

ECONOMIZER SYSTEMS

The unit may be equipped with a factory-installed or accessory (field-installed) economizer system without a control system (EconoMi$er2). See Fig. 58 for component locations.

Economizers use direct-drive damper actuators.

IMPORTANT: Any economizer that meets the economizer requirements as laid out in California's Title 24 mandatory section 120.2 (fault detection and diagnostics) and/or prescriptive section 140.4 (life-cycle tests, damper leakage, 5 year warranty, sensor accuracy, etc), will have a label on the economizer. Any economizer without this label does not meet California's Title 24. The five year limited parts warranty referred to in section 140.4 only applies to factory installed economizers. Please refer to your economizer on your unit.

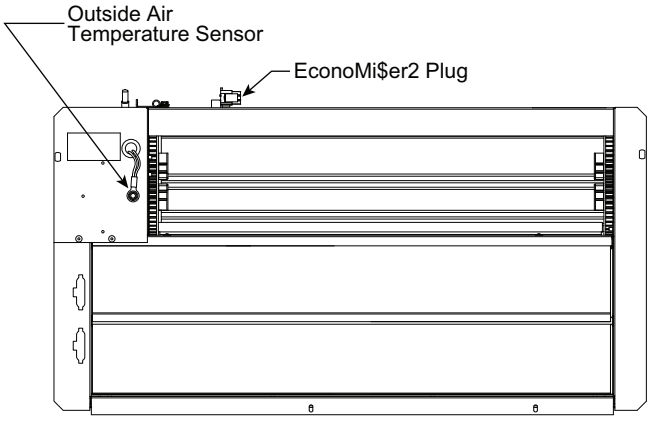

Fig. 58 — EconoMi$er2 Component Locations

EconoMi$er2

IMPORTANT: The optional EconoMi$er®2 does not include a controller. The EconoMi$er2 is operated by a 4 mA to 20 mA signal from an existing field-supplied controller. See Fig. 59 for wiring information.

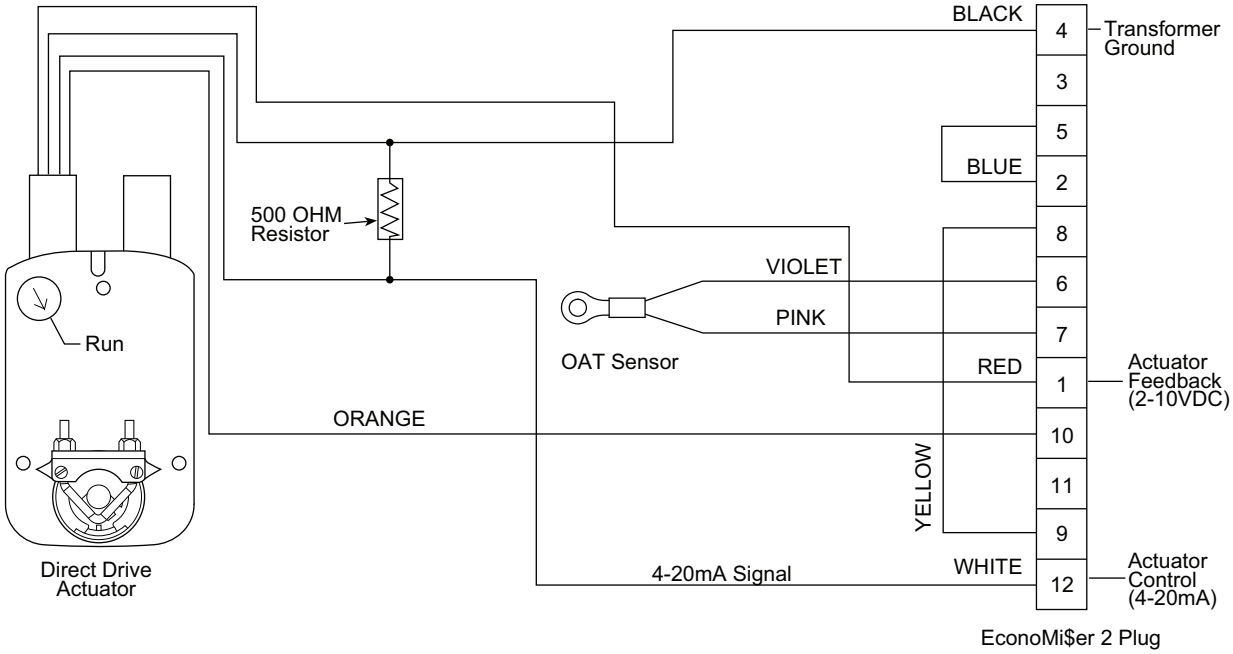

Fig. 59 — EconoMi$er2 with 4 mA to 20 mA Control Wiring

PRE-START-UP/START-UP

⚠ WARNING

PERSONAL INJURY HAZARD

Failure to follow this warning could result in personal injury or death.

1. Follow recognized safety practices and wear approved Personal Protective Equipment (PPE), including safety glasses and gloves when checking or servicing refrigerant system.
2. Do not use a torch to remove any component. System contains oil and refrigerant under pressure. To remove a component, wear PPE and proceed as follows:
   a. Shut off all electrical power and gas to unit. Apply applicable lockout/tag-out procedures.
   b. Recover refrigerant to relieve all pressure from system using both high-pressure and low pressure ports.
   c. Do not use a torch. Cut component connection tubing with tubing cutter and remove component from unit.
   d. Carefully un-sweat remaining tubing stubs when necessary. Oil can ignite when exposed to torch flame.
3. Do not operate compressor or provide any electric power to unit unless compressor terminal cover is in place and secured.
4. Do not remove compressor terminal cover until all electrical power is disconnected and approved lockout/tag-out procedures are in place.
5. Relieve all pressure from system before touching or disturbing anything inside terminal box whenever refrigerant leak is suspected around compressor terminals.
6. Never attempt to repair a soldered connection while refrigerant system is under pressure.

⚠ WARNING

ELECTRICAL OPERATION HAZARD

Failure to follow this warning could result in personal injury or death.

The unit must be electrically grounded in accordance with local codes and NEC ANSI/NFPA 70 (American National Standards Institute/National Fire Protection Association).

Proceed as follows to inspect and prepare the unit for initial start-up:

1. Remove all access panels.
2. Read and follow instructions on all WARNING, CAUTION, and INFORMATION labels attached to, or shipped with, unit.
3. Make the following inspections:
   a. Inspect for shipping and handling damages such as broken lines, loose parts, or disconnected wires, etc.
   b. Inspect for oil at all refrigerant tubing connections and on unit base. Detecting oil generally indicates a refrigerant leak. Leak-test all refrigerant tubing connections using electronic leak detector, halide torch, or liquid-soap solution.
   c. Inspect all field-wiring and factory-wiring connections. Be sure that connections are completed and tight. Be sure that wires are not in contact with refrigerant tubing or sharp edges.
   d. Inspect coil fins. If damaged during shipping and handling, carefully straighten fins with a fin comb.
4. Verify the following conditions:
   a. Make sure that condenser-fan blade are correctly positioned in fan orifice. See Condenser Fan Adjustment section for more details.
   b. Make sure that air filter(s) is in place.
   c. Make sure that condensate drain trap is filled with water to ensure proper drainage.
   d. Make sure that all tools and miscellaneous loose parts have been removed.

START-UP, GENERAL

Unit Preparation

Make sure that unit has been installed in accordance with installation instructions and applicable codes.

In addition to the base unit start-up (unit with electro-mechanical control), there are a few steps needed to properly start-up units with optional direct digital controls (DDC). The DDC's Service Test function should be used to assist in the base unit start-up and also allows verification of output operation. Controller configuration is also part of start-up. This is especially important when field accessories have been added to the unit. The factory pre-configures options installed at the factory. There may also be additional installation steps or inspection required during the start-up process.

Additional Installation/Inspection

Inspect the field-installed accessories for proper installation, making note of which ones do or do not require configuration changes. Inspect the DDC Alarms for initial insight to any potential issues. Refer to the *Controls, Start-up, Operation and Troubleshooting Instructions* manual for the specific DDC. Inspect the SAT sensor for relocation as intended during installation. Inspect special wiring as directed below.

Gas Piping

Check gas piping for leaks.

⚠ WARNING

FIRE, EXPLOSION HAZARD

Failure to follow this warning could result in death, serious personal injury and/or property damage.

Disconnect gas piping from unit when pressure testing at pressure greater than 0.5 psig (3450 Pa). Pressures greater than 0.5 psig will cause gas valve damage resulting in hazardous condition. If gas valve is subjected to pressure greater than 0.5 psig, it must be replaced before use. When pressure testing field-supplied gas piping at pressures of 0.5 psig or less, a unit connected to such piping must be isolated by closing the manual gas valve(s).

⚠ WARNING

RISK OF FIRE OR EXPLOSION

If the information in this manual is not followed exactly, a fire or explosion may result causing property damage, personal injury or loss of life.

Do not store or use gasoline or other flammable vapors and liquids in the vicinity of this or any other appliance.

WHAT TO DO IF YOU SMELL GAS

- Do not try to light any appliance.
- Do not touch any electrical switch; do not use any phone in your building.
- Leave the building immediately.
- Immediately call your gas supplier from a neighbor's phone. Follow the gas supplier's instructions.
- If you cannot reach your gas supplier, call the fire department.

Installation and service must be performed by a qualified installer, service agency or the gas supplier.

⚠ AVERTISSEMENT

RISQUE D´INCENDIE OU D´EXPLOSION

Si les consignes de sécurité ne sont pas suivies à la lettre, cela peut entraîner la mort, de graves blessures ou des dommages matériels.

Ne pas entreposer ni utiliser d´essence ni autres vapeurs ou liquides inflammables à proximité de cet appareil ou de tout autre appareil.

QUE FAIRE SI UNE ODEUR DE GAZ EST DÉTECTÉE

- Ne mettre en marche aucun appareil.
- Ne toucher aucun interrupteur électrique; ne pas utiliser de téléphone dans le bâtiment.
- Quitter le bâtiment immédiatement.
- Appeler immédiatement le fournisseur de gaz en utilisant le téléphone d´un voisin. Suivre les instructions du fournisseur de gaz.
- Si le fournisseur de gaz n´est pas accessible, appeler le service d´incendie.

L´installation et l´entretien doivent être effectués par un installateur ou une entreprise d´entretien qualifié, ou le fournisseur de gaz.

Return-Air Filters

Ensure correct filters are installed in unit (see Appendix B — Physical Data). Do not operate unit without return-air filters.

Outdoor-Air Inlet Screens

Outdoor-air inlet screen must be in place before operating unit.

Compressor Mounting

Compressors are internally spring mounted. Do not loosen or remove compressor hold down bolts.

Internal Wiring

Check all electrical connections in unit control boxes. Tighten as required.

Refrigerant Service Ports

Each unit system has two 1/4-in. SAE flare (with check valves) service ports: one on the suction line, and one on the compressor discharge line. Be sure that caps on the ports are tight.

Compressor Rotation

⚠ CAUTION

EQUIPMENT DAMAGE HAZARD

Failure to follow this caution can result in premature wear and damage to equipment.

Scroll compressors can only compress refrigerant if rotating in the right direction. Reverse rotation for extended times can result in internal damage to the compressor. Scroll compressors are sealed units and cannot be repaired on site location.

On 3-phase units with scroll compressors, it is important to be certain compressor is rotating in the proper direction. To determine whether or not compressor is rotating in the proper direction:

1. Connect service gauges to suction and discharge pressure fittings.
2. Energize the compressor.
3. The suction pressure should drop and the discharge pressure should rise, as is normal on any start-up.

If the suction pressure does not drop and the discharge pressure does not rise to normal levels:

1. Note that the evaporator fan is probably also rotating in the wrong direction.
2. Turn off power to the unit and install lockout tag.
3. Reverse any two of the unit power leads.
4. Re-energize to the compressor. Check pressures.

The suction and discharge pressure levels should now move to their normal start-up levels.

NOTE: When the compressor is rotating in the wrong direction, the unit will make an elevated level of noise and will not provide cooling.

Cooling

Set space thermostat to OFF position. To start unit, turn on main power supply. Set system selector switch at COOL position and fan switch at AUTO. position. Adjust thermostat to a setting below room temperature. Compressor starts on closure of contactor.

Check unit charge. Refer to Refrigerant Charge section on page 12.

Reset thermostat at a position above room temperature. Compressor will shut off. Evaporator fan will shut off after a 30-second delay.

To shut off unit, set system selector switch at OFF position. Resetting thermostat at a position above room temperature shuts unit off temporarily until space temperature exceeds thermostat setting.

Main Burner

Main burners are factory set and should require no adjustment.

To check ignition of main burners and heating controls, move thermostat setpoint above room temperature and verify that the burners light and evaporator fan is energized. Check heating effect, then lower the thermostat setting below the room temperature and verify that the burners and evaporator fan turn off.

When replacing unit orifices, order the necessary parts through RCD.

Heating

1. Purge gas supply line of air by opening union ahead of the gas valve. If gas odor is detected, tighten union and wait 5 minutes before proceeding.
2. Turn on electrical supply and manual gas valve.
3. Set system switch selector at HEAT position and fan switch at AUTO. or ON position. Set heating temperature lever above room temperature.
4. The induced-draft motor will start.
5. After a call for heating, the main burners should light within 5 seconds. If the burner does not light, then there is a 22-second delay before another 5-second try. If the burner still does not light, the time delay is repeated. If the burner does not light within 15 minutes, there is a lockout. To reset the control, break the 24 v power to W1.
6. The evaporator-fan motor will turn on 45 seconds after burner ignition.
7. The evaporator-fan motor will turn off in 45 seconds after the thermostat temperature is satisfied.
8. Adjust airflow to obtain a temperature rise within the range specified on the unit nameplate.

NOTE: The default value for the evaporator-fan motor on/off delay is 45 seconds. The Integrated Gas Unit Controller (IGC) modifies this value when abnormal limit switch cycles occur. Based upon unit operating conditions, the on delay can be reduced to 0 seconds and the off delay can be extended to 180 seconds. When one flash of the LED is observed, the evaporator-fan on/off delay has been modified.

If the limit switch trips at the start of the heating cycle during the evaporator on delay, the time period of the on delay for the next cycle will be 5 seconds less than the time at which the switch tripped. (Example: If the limit switch trips at 30 seconds, the evaporator-fan on delay for the next cycle will occur at 25 seconds.) To prevent short-cycling, a 5-second reduction will only occur if a minimum of 10 minutes has elapsed since the last call for heating.

The evaporator-fan off delay can also be modified. Once the call for heating has ended, there is a 10-minute period during which the modification can occur. If the limit switch trips during this period, the evaporator-fan off delay will increase by 15 seconds. A maximum of 9 trips can occur, extending the evaporator-fan off delay to 180 seconds.

To restore the original default value, reset the power to the unit.

To shut off unit, set system selector switch at OFF position. Resetting heating selector lever below room temperature will temporarily shut unit off until space temperature falls below thermostat setting.

Ventilation (Continuous Fan)

Set fan and system selector switches at ON and OFF positions, respectively. Evaporator fan operates continuously to provide constant air circulation. When the evaporator-fan selector switch is turned to the OFF position, there is a 30-second delay before the fan turns off.

FASTENER TORQUE VALUES

Table 17 — Torque Values

Heat shield screws	30 in.-lb (3.4 Nm) ±2 in.-lb (0.2 Nm)
Stator motor mounting screws	23 in.-lb (2.6 Nm) ±2 in.-lb (0.2 Nm)
Fan rotor mounting screws	23 in.-lb (2.6 Nm) ±2 in.-lb (0.2 Nm)
Limit switch screws	50 in.-lb (5.7 Nm) ±5 in.-lb (0.6 Nm)
Fan Deck bracket screws	50 in.-lb (5.7 Nm) ±5 in.-lb (0.6 Nm)
Condenser fan motor mounting screws	30 in.-lb (3.4 Nm) ±3 in.-lb (0.3 Nm)
Condenser fan hub set screw	60 in.-lb (6.8 Nm) ±5 in.-lb (0.6 Nm)
Compressor mounting bolts	65 in.-lb (7.3 Nm) +10 in.-lb (1.2Nm)

START-UP, SYSTEMVU CONTROLS

IMPORTANT: SET-UP INSTRUCTIONS

Installation, wiring and troubleshooting information for the SystemVu™ Controller.: "*48/50JC 04-06 Single Package Rooftop Units with SystemVu Controller, Version X.X Controls, Start-up, Operation and Troubleshooting Instructions*." Have a copy of this manual available at unit start-up.

APPENDIX A — MODEL NUMBER NOMENCLATURE

Position:	1	2	3	4	5	6	7	8	9	10	11	12	13	14	15	16	17	18
Example:	4	8	J	C	G	V	0	6	A	2	A	5	–	3	A	0	A	0

Unit Heat Type
48 - Gas Heat Packaged Rooftop

Model Series - WeatherExpert®
JC - Ultra High Efficiency

Heat Options
G = ULTRA Low NOx - Low Gas Heat (14 ng/J)
H = ULTRA Low NOx - Medium Gas Heat (14 ng/J)
(All Ultra Low NOx models include Stainless Steel HX)

Refrig. Systems Options
V = Variable Speed Cooling Capacity
W= Variable Speed Cooling Capacity with Humidi-MiZer® System

Cooling Tons
04 - 3 ton
05 - 4 ton
06 - 5 ton

Sensor Options
A = None
B = RA (Return Air) Smoke Detector
C = SA (Supply Air) Smoke Detector
D = RA + SA Smoke Detector
E = CO_2
F = RA Smoke Detector and CO_2
G = SA Smoke Detector and CO_2
H = RA + SA Smoke Detector and CO_2
J = Condensate Overflow Switch
K = Condensate Overflow Switch and RA Smoke Detector
L = Condensate Overflow Switch and RA and SA Smoke Detectors
M = Condensate Overflow Switch and SA Smoke Detector
N = Condensate Overflow Switch and CO_2
P = Condensate Overflow Switch w/ CO_2 + RA Smoke Detector
Q = Condensate Overflow Switch w/ CO_2 + SA Smoke Detector
R = Condensate Overflow Switch w/ CO_2 + RA and SA Smk. Det.

Vane Axial Fan - Indoor Fan Options
1 = Direct Drive EcoBlue™ - Standard Static
2 = Direct Drive EcoBlue - Medium Static
3 = Direct Drive EcoBlue - High Static

Coil Options - Round Tube/Plate Fin Condenser Coil (Outdoor - Indoor — Hail Guard)
A = Al/Cu - Al/Cu
B = Precoat Al/Cu - Al/Cu
C = E-coat Al/Cu - Al/Cu
D = E-coat Al/Cu - E-coat Al/Cu
E = Cu/Cu - Al/Cu
F = Cu/Cu - Cu/Cu
M = Al/Cu - Al/Cu — Louvered Hail Guard
N = Precoat Al/Cu - Al/Cu — Louvered Hail Guard
P = E-coat Al/Cu - Al/Cu — Louvered Hail Guard
Q = E-coat Al/Cu - E-coat Al/Cu — Louvered Hail Guard
R = Cu/Cu - Al/Cu — Louvered Hail Guard
S = Cu/Cu - Cu/Cu — Louvered Hail Guard

Voltage
5 = 208/230-3-60
6 = 460-3-60

Design Revision
– = Factory Design Revision

Base Unit Controls
3 = SystemVu™ Controls - Standard all units

Air Intake / Exhaust Options
A = None
B = Temperature EconoMi$er®2 w/ Barometric Relief
F = Enthalpy EconoMi$er2 w/ Barometric Relief
U = Ultra Low Leak Temperature EconoMi$er2 w/ Barometric Relief
W= Ultra Low Leak Enthalpy EconoMi$er2 w/ Barometric Relief

Service Options (Foil Face Insulation Standard)
0 = None
1 = Unpowered Convenience Outlet
2 = Powered Convenience Outlet
3 = Hinged Access Panels
4 = Hinged Access Panels and Unpowered Convenience Outlet
5 = Hinged Panels and Powered Convenience Outlet
6 = MERV 8 High Efficiency Filters
7 = MERV 8 High Efficiency Filters and Unpowered Convenience Outlet
8 = MERV 8 High Efficiency Filters and Powered Convenience Outlet
9 = MERV 8 High Efficiency Filters and Hinged Panels
A = MERV 8 High Efficiency Filters, Hinged Panels and Unpowered Convenience Outlet
B = MERV 8 High Efficiency Filters, Hinged Panels and Powered Convenience Outlet

Electrical Options
A = None
B = HACR Breaker[a]
C = Non-Fused Disconnect (NFD)[b]
D = Thru-The-Base (TTB) Connections
E = HACR Circuit Breaker and TTB[a]
F = Non-Fused Disconnect and TTB[b]
N = Phase Monitor Protection
P = Phase Monitor and HACR[a]
Q = Phase Monitor and NFD[b]
R = Phase Monitor and TTB
S = Phase Monitor and HACR and TTB[a]
T = Phase Monitor and NFD and TTB[b]

Factory Assigned
0 = Standard
1 = LTL

[a]HACR are not available on 460-v models.
[b]Non-Fused Disconnect (NFD) are not available on 460-v models.

Fig. A — Model Number Nomenclature

APPENDIX B — PHYSICAL DATA

48JC(G/H) 3 TON PHYSICAL DATA

48JC(G/H) UNIT	48JC(G/H)V04	48JC(G/H)W04
NOMINAL TONS	3	3
BASE UNIT OPERATING WT (lb)[a]	587	587
REFRIGERATION SYSTEM		
No. Circuits/No. Compressors/Type	1 / 1 / Variable Speed Scroll	1 / 1 / Variable Speed Scroll
Puron® (R-410A) Charge A/B (lbs-oz)	12-0	—
Humidi-MiZer® Puron (R-410A) Charge A/B (lbs-oz)	—	15-0
Metering Device	TXV	TXV
Humidi-MiZer Metering Device	—	TXV
High-Pressure Trip/Reset (psig)	630 / 505	630 / 505
Low-Pressure Trip/Reset (psig)	54 / 117	27 / 44
EVAPORATOR COIL		
Material (Tube / Fin)	Cu/Al	Cu/Al
Coil Type (in. RTPF)	3/8	3/8
Rows / FPI	3 / 15	3 / 15
Total Face Area (ft^2)	7.3	7.3
Condensate Drain Connection Size (in.)	3/4	3/4
CONDENSER COIL		
Material (Tube / Fin)	Cu/Al	Cu/Al
Coil Type (in. RTPF)	5/16	5/16
Rows / FPI	2 / 18	2 / 18
Total Face Area (ft^2)	21.3	21.3
HUMIDI-MIZER COIL		
Material (Tube / Fin)	—	Cu/Al
Coil Type (in. RTPF)	—	3/8
Rows / FPI	—	1 / 17
Total Face Area (ft^2)	—	5.5
EVAPORATOR FAN AND MOTOR		
Standard Static 3 Phase		
Motor Qty / Drive Type	1 / Direct	1 / Direct
Max Cont BHP	0.44	0.44
RPM Range	189-1890	189-1890
Fan Qty / Type	1 / Vane Axial	1 / Vane Axial
Fan Diameter (in.)	16.6	16.6
Medium Static 3 Phase		
Motor Qty / Drive Type	1 / Direct	1 / Direct
Max Cont BHP	0.71	0.71
RPM Range	219-2190	219-2190
Fan Qty / Type	1 / Vane Axial	1 / Vane Axial
Fan Diameter (in.)	16.6	16.6
High Static 3 Phase		
Motor Qty / Drive Type	1 / Direct	1 / Direct
Max Cont BHP	1.07	1.07
RPM Range	249-2490	249-2490
Fan Qty / Type	1 / Vane Axial	1 / Vane Axial
Fan Diameter (in.)	16.6	16.6
CONDENSER FAN AND MOTOR		
Qty / Motor Drive Type	1 / Direct	1 / Direct
Motor HP / RPM	1/3 / 160 - 1100	1/3 / 160 - 1100
Fan Diameter (in.)	23.0	23.0
FILTERS		
Return Air Filter Number / size (in.)	4 / 16x16x2	4 / 16x16x2
Outside Air Inlet Screen Number / size (in.)	1 / 20x24x1	1 / 20x24x1

48JC(G/H) 4 TON PHYSICAL DATA

48JC(G/H) UNIT	48JC(G/H)V05	48JC(G/H)W05
NOMINAL TONS	4	4
BASE UNIT OPERATING WT (lb)[a]	610	610
REFRIGERATION SYSTEM		
No. Circuits/No. Compressors/Type	1 / 1 / Variable Speed Scroll	1 / 1 / Variable Speed Scroll
Puron® (R-410A) Charge A/B (lbs-oz)	11-5	—
Humidi-MiZer® Puron (R-410A) Charge A/B (lbs-oz)	—	16-5
Metering Device	TXV	TXV
Humidi-MiZer Metering Device	—	TXV
High-Pressure Trip/Reset (psig)	630 / 505	630 / 505
Low-Pressure Trip/Reset (psig)	54 / 117	27 / 44
EVAPORATOR COIL		
Material (Tube / Fin)	Cu/Al	Cu/Al
Coil Type (in. RTPF)	3/8	3/8
Rows / FPI	4 / 15	4 / 15
Total Face Area (ft^2)	7.3	7.3
Condensate Drain Connection Size (in.)	3/4	3/4
CONDENSER COIL		
Material (Tube / Fin)	Cu/Al	Cu/Al
Coil Type (in. RTPF)	5/16	5/16
Rows / FPI	2 / 18	2 / 18
Total Face Area (ft^2)	21.3	21.3
HUMIDI-MIZER COIL		
Material (Tube / Fin)	—	Cu/Al
Coil Type (in. RTPF)	—	3/8
Rows / FPI	—	2 / 17
Total Face Area (ft^2)	—	5.5
EVAPORATOR FAN AND MOTOR		
Standard Static 3 Phase		
Motor Qty / Drive Type	1 / Direct	1 / Direct
Max Cont BHP	0.72	0.72
RPM Range	190-1900	190-1900
Fan Qty / Type	1 / Vane Axial	1 / Vane Axial
Fan Diameter (in.)	16.6	16.6
Medium Static 3 Phase		
Motor Qty / Drive Type	1 / Direct	1 / Direct
Max Cont BHP	1.06	1.06
RPM Range	217-2170	217-2170
Fan Qty / Type	1 / Vane Axial	1 / Vane Axial
Fan Diameter (in.)	16.6	16.6
High Static 3 Phase		
Motor Qty / Drive Type	1 / Direct	1 / Direct
Max Cont BHP	1.96	1.96
RPM Range	266-2660	266-2660
Fan Qty / Type	1 / Vane Axial	1 / Vane Axial
Fan Diameter (in.)	16.6	16.6
CONDENSER FAN AND MOTOR		
Qty / Motor Drive Type	1 / Direct	1 / Direct
Motor HP / RPM	1/3 / 160 - 1100	1/3 / 160 - 1100
Fan Diameter (in.)	23.0	23.0
FILTERS		
Return Air Filter Number / size (in.)	4 / 16x16x2	4 / 16x16x2
Outside Air Inlet Screen Number / size (in.)	1 / 20x24x1	1 / 20x24x1

48JC(G/H) 5 TON PHYSICAL DATA

48JC(G/H) UNIT	48JC(G/H)V06	48JC(G/H)W06
NOMINAL TONS	5	5
BASE UNIT OPERATING WT (lb)[a]	612	612
REFRIGERATION SYSTEM		
No. Circuits/No. Compressors/Type	1 / 1 / Variable Speed Scroll	1 / 1 / Variable Speed Scroll
Puron® (R-410A) Charge A/B (lbs-oz)	12-0	—
Humidi-MiZer® Puron (R-410A) Charge A/B (lbs-oz)	—	18-0
Metering Device	TXV	TXV
Humidi-MiZer Metering Device	—	TXV
High-Pressure Trip/Reset (psig)	630 / 505	630 / 505
Low-Pressure Trip/Reset (psig)	54 / 117	27 / 44
EVAPORATOR COIL		
Material (Tube / Fin)	Cu/Al	Cu/Al
Coil Type (in. RTPF)	3/8	3/8
Rows / FPI	4 / 15	4 / 15
Total Face Area (ft^2)	7.3	7.3
Condensate Drain Connection Size (in.)	3/4	3/4
CONDENSER COIL		
Material (Tube / Fin)	Cu/Al	Cu/Al
Coil Type (in. RTPF)	5/16	5/16
Rows / FPI	2 / 18	2 / 18
Total Face Area (ft^2)	21.3	21.3
HUMIDI-MIZER COIL		
Material (Tube / Fin)	—	Cu/Al
Coil Type (in. RTPF)	—	3/8
Rows / FPI	—	2 / 17
Total Face Area (ft^2)	—	5.5
EVAPORATOR FAN AND MOTOR		
Standard Static 3 Phase		
Motor Qty / Drive Type	1 / Direct	1 / Direct
Max Cont BHP	1.06	1.06
RPM Range	215-2150	215-2150
Fan Qty / Type	1 / Vane Axial	1 / Vane Axial
Fan Diameter (in.)	16.6	16.6
Medium Static 3 Phase		
Motor Qty / Drive Type	1 / Direct	1 / Direct
Max Cont BHP	1.44	1.44
RPM Range	239-2390	239-2390
Fan Qty / Type	1 / Vane Axial	1 / Vane Axial
Fan Diameter (in.)	16.6	16.6
High Static 3 Phase		
Motor Qty / Drive Type	1 / Direct	1 / Direct
Max Cont BHP	2.43	2.43
RPM Range	284-2836	284-2836
Fan Qty / Type	1 / Vane Axial	1 / Vane Axial
Fan Diameter (in.)	16.6	16.6
CONDENSER FAN AND MOTOR		
Qty / Motor Drive Type	1 / Direct	1 / Direct
Motor HP / RPM	1/3 / 160 - 1100	1/3 / 160 - 1100
Fan Diameter (in.)	23.0	23.0
FILTERS		
Return Air Filter Number / size (in.)	4 / 16x16x2	4 / 16x16x2
Outside Air Inlet Screen Number / size (in.)	1 / 20x24x1	1 / 20x24x1

NOTE(S):

a. Base unit operating weight does not include weight of options.

LEGEND

BHP — Brake Horsepower
FPI — Fins Per Inch
OA — Outdoor Air
RA — Return Air

48JC(G/H) 3 TO 5 TON GAS HEAT DATA

48JC(G/H) UNIT	48JC(G/H)*04	48JC(G/H)*05	48JC(G/H)*06
GAS CONNECTION			
No. of Gas Valves	1	1	1
Natural Gas Supply Line Pressure (in. wg [psig])	5-13 [0.18-0.47]	5-13 [0.18-0.47]	5-13 [0.18-0.47]
HEAT ANTICIPATOR SETTING (AMPS)			
First Stage	0.14	0.14	0.14
NATURAL GAS HEAT			
LOW			
No. of Stages / No. of Burners (total)	1 / 1	1 / 1	1 / 1
Connection Size (in. NPT)	1/2	1/2	1/2
Rollout Switch Opens / Closes (°F)	350 / 301	350 / 301	350 / 301
Temperature Rise (°F)	20-50	20-50	15-45
MEDIUM			
No. of Stages / No. of Burners (total)	1 / 1	1 / 1	1 / 1
Connection Size (in. NPT)	1/2	1/2	1/2
Rollout Switch Opens / Closes (°F)	350 / 301	350 / 301	350 / 301
Temperature Rise (°F)	20-60	20-60	20-60

APPENDIX C — FAN PERFORMANCE

GENERAL FAN PERFORMANCE NOTES

1. Interpolation is permissible. Do not extrapolate.
2. External static pressure is the static pressure difference between the return duct and the supply duct plus the static pressure caused by any FIOPs or accessories.
3. Tabular data accounts for pressure loss due to clean filters, unit casing, wet coils, and highest gas heat exchanger (when gas heat unit).
4. Factory options and accessories may effect static pressure losses. Gas heat unit fan tables assume highest gas heat models; for fan selections with low or medium heat models, the user must deduct low and medium heat static pressures. Selection software is available, through your salesperson, to help you select the best motor/drive combination for your application.
5. The fan performance tables offer motor/drive recommendations. In cases when two motor/drive combinations would work, Carrier recommends the lower horsepower option.
6. For information on the electrical properties of Carrier motors, please see the Electrical Data section of the Product Data book.
7. For more information on the performance limits of Carrier motors, see the Application Data section of the Product Data book.
8. The EPACT (Energy Policy Act of 1992) regulates energy requirements for specific types of indoor fan motors. Motors regulated by EPACT include any general purpose, T-frame (three-digit, 143 and larger), single-speed, foot mounted, polyphase, squirrel cage induction motors of NEMA (National Electrical Manufacturers Association) design A and B, manufactured for use in the United States. Ranging from 1 to 200 Hp, these continuous-duty motors operate on 230 and 460 volt, 60 Hz power. If a motor does not fit into these specifications, the motor does not have to be replaced by an EPACT compliant energy-efficient motor. Variable-speed motors are exempt from EPACT compliance requirements.

GENERAL FAN PERFORMANCE NOTES

1. Interpolation is permissible. Do not extrapolate.
2. External static pressure is the static pressure difference between the return duct and the supply duct plus the static pressure caused by any FIOPs or accessories.
3. Tabular data accounts for pressure loss due to clean filters, unit casing, wet coils, and highest gas heat exchanger (when gas heat unit).
4. Factory options and accessories may effect static pressure losses. Gas heat unit fan tables assume highest gas heat models; for fan selections with low or medium heat models, the user must deduct low and medium heat static pressures. Selection software is available, through your salesperson, to help you select the best motor/drive combination for your application.
5. The fan performance tables offer motor/drive recommendations. In cases when two motor/drive combinations would work, Carrier recommends the lower horsepower option.

6. For information on the electrical properties of Carrier motors, please see the Electrical Data section of this book.
7. For more information on the performance limits of Carrier motors, see the Application Data section of this book.

8. The EPACT (Energy Policy Act of 1992) regulates energy requirements for specific types of indoor fan motors. Motors regulated by EPACT include any general purpose, T-frame (three-digit, 143 and larger), single-speed, foot mounted, polyphase, squirrel cage induction motors of NEMA (National Electrical Manufacturers Association) design A and B, manufactured for use in the United States. Ranging from 1 to 200 Hp, these continuous-duty motors operate on 230 and 460 volt, 60 Hz power. If a motor does not fit into these specifications, the motor does not have to be replaced by an EPACT compliant energy-efficient motor. Variable-speed motors are exempt from EPACT compliance requirements.

48JC(G/H)*04 THREE PHASE — 3 TON VERTICAL SUPPLY (RPM - BHP)

CFM	AVAILABLE EXTERNAL STATIC PRESSURE (IN. WG)									
	0.2		0.4		0.6		0.8		1.0	
	RPM	BHP	RPM	BHP	RPM	BHP	RPM	BHP	RPM	BHP
900	1092	0.09	1317	0.16	1503	0.24	1666	0.32	1812	0.41
975	1140	0.10	1361	0.18	1543	0.26	1703	0.34	1847	0.44
1050	1190	0.12	1405	0.19	1584	0.28	1741	0.37	1884	0.47
1125	1241	0.13	1450	0.21	1626	0.30	1781	0.39	1922	0.49
1200	1294	0.15	1497	0.23	1670	0.32	1822	0.42	1961	0.53
1275	1348	0.17	1544	0.26	1714	0.35	1864	0.45	2001	0.56
1350	1404	0.19	1593	0.28	1759	0.38	1907	0.48	2042	0.59
1425	1460	0.22	1642	0.31	1805	0.41	1951	0.52	2084	0.63
1500	1517	0.24	1693	0.34	1852	0.44	1996	0.55	2127	0.67

CFM	AVAILABLE EXTERNAL STATIC PRESSURE (IN. WG)									
	1.2		1.4		1.6		1.8		2.0	
	RPM	BHP	RPM	BHP	RPM	BHP	RPM	BHP	RPM	BHP
900	1947	0.51	2072	0.62	2190	0.73	2301	0.85	2406	0.97
975	1980	0.54	2104	0.65	2221	0.76	2331	0.88	2436	1.01
1050	2015	0.57	2138	0.68	2253	0.80	2362	0.92	2466	1.04
1125	2051	0.60	2172	0.71	2286	0.83	2395	0.96	—	—
1200	2088	0.63	2208	0.75	2321	0.87	2428	1.00	—	—
1275	2127	0.67	2245	0.79	2357	0.91	2463	1.04	—	—
1350	2167	0.71	2283	0.83	2394	0.96	—	—	—	—
1425	2207	0.75	2323	0.87	2432	1.00	—	—	—	—
1500	2249	0.79	2363	0.92	2471	1.05	—	—	—	—

Standard Static 1092-1890 rpm, 0.44 Max bhp

Medium Static 1092-2190 rpm, 0.71 Max bhp

High Static 1092-2490 rpm, 1.07 Max bhp

NOTE: Fan tables include highest gas heat. Utilize static pressure gain tables for lower gas heat capacities.

48JC(G/H)*04 THREE PHASE – STANDARD STATIC — 3 TON VERTICAL SUPPLY (RPM - VDC)

CFM	AVAILABLE EXTERNAL STATIC PRESSURE (IN. WG)									
	0.2		0.4		0.6		0.8		1.0	
	RPM	VDC	RPM	VDC	RPM	VDC	RPM	VDC	RPM	VDC
900	1092	5.8	1317	7.0	1503	8.0	1666	8.8	1812	9.6
975	1140	6.0	1361	7.2	1543	8.2	1703	9.0	1847	9.8
1050	1190	6.3	1405	7.4	1584	8.4	1741	9.2	1884	10.0
1125	1241	6.6	1450	7.7	1626	8.6	1781	9.4	—	—
1200	1294	6.8	1497	7.9	1670	8.8	1822	9.6	—	—
1275	1348	7.1	1544	8.2	1714	9.1	1864	9.9	—	—
1350	1404	7.4	1593	8.4	1759	9.3	—	—	—	—
1425	1460	7.7	1642	8.7	1805	9.6	—	—	—	—
1500	1517	8.0	1693	9.0	1852	9.8	—	—	—	—

CFM	AVAILABLE EXTERNAL STATIC PRESSURE (IN. WG)									
	1.2		1.4		1.6		1.8		2.0	
	RPM	VDC	RPM	VDC	RPM	VDC	RPM	VDC	RPM	VDC
900	—	—	—	—	—	—	—	—	—	—
975	—	—	—	—	—	—	—	—	—	—
1050	—	—	—	—	—	—	—	—	—	—
1125	—	—	—	—	—	—	—	—	—	—
1200	—	—	—	—	—	—	—	—	—	—
1275	—	—	—	—	—	—	—	—	—	—
1350	—	—	—	—	—	—	—	—	—	—
1425	—	—	—	—	—	—	—	—	—	—
1500	—	—	—	—	—	—	—	—	—	—

Standard Static 1092-1890 rpm

NOTE: Fan tables include highest gas heat. Utilize static pressure gain tables for lower gas heat capacities.

48JC(G/H)*04 THREE PHASE – MEDIUM STATIC — 3 TON VERTICAL SUPPLY (RPM - VDC)

CFM	AVAILABLE EXTERNAL STATIC PRESSURE (IN. WG)									
	0.2		0.4		0.6		0.8		1.0	
	RPM	VDC	RPM	VDC	RPM	VDC	RPM	VDC	RPM	VDC
900	1092	5.0	1317	6.0	1503	6.9	1666	7.6	1812	8.3
975	1140	5.2	1361	6.2	1543	7.0	1703	7.8	1847	8.4
1050	1190	5.4	1405	6.4	1584	7.2	1741	7.9	1884	8.6
1125	1241	5.7	1450	6.6	1626	7.4	1781	8.1	1922	8.8
1200	1294	5.9	1497	6.8	1670	7.6	1822	8.3	1961	9.0
1275	1348	6.2	1544	7.1	1714	7.8	1864	8.5	2001	9.1
1350	1404	6.4	1593	7.3	1759	8.0	1907	8.7	2042	9.3
1425	1460	6.7	1642	7.5	1805	8.2	1951	8.9	2084	9.5
1500	1517	6.9	1693	7.7	1852	8.5	1996	9.1	2127	9.7

CFM	AVAILABLE EXTERNAL STATIC PRESSURE (IN. WG)									
	1.2		1.4		1.6		1.8		2.0	
	RPM	VDC	RPM	VDC	RPM	VDC	RPM	VDC	RPM	VDC
900	1947	8.9	2072	9.5	2190	10.0	—	—	—	—
975	1980	9.0	2104	9.6	—	—	—	—	—	—
1050	2015	9.2	2138	9.8	—	—	—	—	—	—
1125	2051	9.4	2172	9.9	—	—	—	—	—	—
1200	2088	9.5	—	—	—	—	—	—	—	—
1275	2127	9.7	—	—	—	—	—	—	—	—
1350	2167	9.9	—	—	—	—	—	—	—	—
1425	—	—	—	—	—	—	—	—	—	—
1500	—	—	—	—	—	—	—	—	—	—

Medium Static 1092-2190 rpm

NOTE: Fan tables include highest gas heat. Utilize static pressure gain tables for lower gas heat capacities.

48JC(G/H)*04 THREE PHASE – HIGH STATIC — 3 TON VERTICAL SUPPLY (RPM - VDC)

CFM	AVAILABLE EXTERNAL STATIC PRESSURE (IN. WG)									
	0.2		0.4		0.6		0.8		1.0	
	RPM	VDC	RPM	VDC	RPM	VDC	RPM	VDC	RPM	VDC
900	1092	4.4	1317	5.3	1503	6.0	1666	6.7	1812	7.3
975	1140	4.6	1361	5.5	1543	6.2	1703	6.8	1847	7.4
1050	1190	4.8	1405	5.6	1584	6.4	1741	7.0	1884	7.6
1125	1241	5.0	1450	5.8	1626	6.5	1781	7.2	1922	7.7
1200	1294	5.2	1497	6.0	1670	6.7	1822	7.3	1961	7.9
1275	1348	5.4	1544	6.2	1714	6.9	1864	7.5	2001	8.0
1350	1404	5.6	1593	6.4	1759	7.1	1907	7.7	2042	8.2
1425	1460	5.9	1642	6.6	1805	7.2	1951	7.8	2084	8.4
1500	1517	6.1	1693	6.8	1852	7.4	1996	8.0	2127	8.5

CFM	AVAILABLE EXTERNAL STATIC PRESSURE (IN. WG)									
	1.2		1.4		1.6		1.8		2.0	
	RPM	VDC	RPM	VDC	RPM	VDC	RPM	VDC	RPM	VDC
900	1947	7.8	2072	8.3	2190	8.8	2301	9.2	2406	9.7
975	1980	8.0	2104	8.4	2221	8.9	2331	9.4	2436	9.8
1050	2015	8.1	2138	8.6	2253	9.0	2362	9.5	2466	9.9
1125	2051	8.2	2172	8.7	2286	9.2	2395	9.6	—	—
1200	2088	8.4	2208	8.9	2321	9.3	2428	9.8	—	—
1275	2127	8.5	2245	9.0	2357	9.5	2463	9.9	—	—
1350	2167	8.7	2283	9.2	2394	9.6	—	—	—	—
1425	2207	8.9	2323	9.3	2432	9.8	—	—	—	—
1500	2249	9.0	2363	9.5	2471	9.9	—	—	—	—

High Static 1092-2490 rpm

NOTE: Fan tables include highest gas heat. Utilize static pressure gain tables for lower gas heat capacities.

48JC(G/H)*05 THREE PHASE — 4 TON VERTICAL SUPPLY (RPM - BHP)

CFM	AVAILABLE EXTERNAL STATIC PRESSURE (IN. WG)									
	0.2		0.4		0.6		0.8		1.0	
	RPM	BHP	RPM	BHP	RPM	BHP	RPM	BHP	RPM	BHP
1200	1190	0.18	1383	0.28	1544	0.39	1685	0.51	1814	0.63
1300	1255	0.21	1441	0.32	1599	0.43	1737	0.55	1863	0.68
1400	1320	0.24	1500	0.36	1654	0.48	1791	0.61	1914	0.74
1500	1388	0.28	1561	0.40	1711	0.53	1845	0.66	1967	0.80
1600	1456	0.33	1623	0.45	1770	0.59	1901	0.73	2020	0.87
1700	1526	0.38	1685	0.51	1829	0.65	1958	0.79	2075	0.94
1800	1596	0.43	1749	0.56	1889	0.71	2016	0.87	2131	1.02
1900	1668	0.49	1814	0.63	1950	0.78	2074	0.94	2188	1.11
2000	1741	0.56	1881	0.70	2012	0.86	2134	1.03	2246	1.20

CFM	AVAILABLE EXTERNAL STATIC PRESSURE (IN. WG)									
	1.2		1.4		1.6		1.8		2.0	
	RPM	BHP	RPM	BHP	RPM	BHP	RPM	BHP	RPM	BHP
1200	1933	0.77	2045	0.91	2151	1.06	2253	1.21	2351	1.38
1300	1980	0.82	2089	0.96	2194	1.12	2293	1.28	2389	1.44
1400	2029	0.88	2136	1.03	2238	1.19	2336	1.35	2430	1.52
1500	2080	0.95	2185	1.10	2285	1.26	2381	1.43	2473	1.60
1600	2131	1.02	2236	1.18	2334	1.34	2428	1.51	2519	1.69
1700	2185	1.10	2287	1.26	2385	1.43	2477	1.60	2566	1.78
1800	2239	1.19	2340	1.35	2436	1.53	2527	1.70	2615	1.89
1900	2295	1.28	2394	1.45	2489	1.63	2579	1.81	—	—
2000	2351	1.37	2449	1.55	2543	1.74	2632	1.93	—	—

Standard Static 1190-1900 rpm, 0.72 Max bhp

Medium Static 1190-2170 rpm, 1.06 Max bhp

High Static 1190-2660 rpm, 1.96 Max bhp

NOTE: Fan tables include highest gas heat. Utilize static pressure gain tables for lower gas heat capacities.

48JC(G/H)*05 THREE PHASE – STANDARD STATIC — 4 TON VERTICAL SUPPLY (RPM - VDC)

CFM	AVAILABLE EXTERNAL STATIC PRESSURE (IN. WG)									
	0.2		0.4		0.6		0.8		1.0	
	RPM	VDC	RPM	VDC	RPM	VDC	RPM	VDC	RPM	VDC
1200	1190	6.3	1383	7.3	1544	8.1	1685	8.9	1814	9.5
1300	1255	6.6	1441	7.6	1599	8.4	1737	9.1	1863	9.8
1400	1320	6.9	1500	7.9	1654	8.7	1791	9.4	—	—
1500	1388	7.3	1561	8.2	1711	9.0	1845	9.7	—	—
1600	1456	7.7	1623	8.5	1770	9.3	—	—	—	—
1700	1526	8.0	1685	8.9	1829	9.6	—	—	—	—
1800	1596	8.4	1749	9.2	1889	9.9	—	—	—	—
1900	1668	8.8	1814	9.5	—	—	—	—	—	—
2000	1741	9.2	1881	9.9	—	—	—	—	—	—

CFM	AVAILABLE EXTERNAL STATIC PRESSURE (IN. WG)									
	1.2		1.4		1.6		1.8		2.0	
	RPM	VDC	RPM	VDC	RPM	VDC	RPM	VDC	RPM	VDC
1200	—	—	—	—	—	—	—	—	—	—
1300	—	—	—	—	—	—	—	—	—	—
1400	—	—	—	—	—	—	—	—	—	—
1500	—	—	—	—	—	—	—	—	—	—
1600	—	—	—	—	—	—	—	—	—	—
1700	—	—	—	—	—	—	—	—	—	—
1800	—	—	—	—	—	—	—	—	—	—
1900	—	—	—	—	—	—	—	—	—	—
2000	—	—	—	—	—	—	—	—	—	—

Standard Static 1190-1900 rpm

NOTE: Fan tables include highest gas heat. Utilize static pressure gain tables for lower gas heat capacities.

48JC(G/H)*05 THREE PHASE – MEDIUM STATIC — 4 TON VERTICAL SUPPLY (RPM - VDC)

CFM	AVAILABLE EXTERNAL STATIC PRESSURE (IN. WG)									
	0.2		0.4		0.6		0.8		1.0	
	RPM	VDC	RPM	VDC	RPM	VDC	RPM	VDC	RPM	VDC
1200	1190	5.5	1383	6.4	1544	7.1	1685	7.8	1814	8.4
1300	1255	5.8	1441	6.6	1599	7.4	1737	8.0	1863	8.6
1400	1320	6.1	1500	6.9	1654	7.6	1791	8.3	1914	8.8
1500	1388	6.4	1561	7.2	1711	7.9	1845	8.5	1967	9.1
1600	1456	6.7	1623	7.5	1770	8.2	1901	8.8	2020	9.3
1700	1526	7.0	1685	7.8	1829	8.4	1958	9.0	2075	9.6
1800	1596	7.4	1749	8.1	1889	8.7	2016	9.3	2131	9.8
1900	1668	7.7	1814	8.4	1950	9.0	2074	9.6	—	—
2000	1741	8.0	1881	8.7	2012	9.3	2134	9.8	—	—

CFM	AVAILABLE EXTERNAL STATIC PRESSURE (IN. WG)									
	1.2		1.4		1.6		1.8		2.0	
	RPM	VDC	RPM	VDC	RPM	VDC	RPM	VDC	RPM	VDC
1200	1933	8.9	2045	9.4	2151	9.9	—	—	—	—
1300	1980	9.1	2089	9.6	—	—	—	—	—	—
1400	2029	9.4	2136	9.8	—	—	—	—	—	—
1500	2080	9.6	—	—	—	—	—	—	—	—
1600	2131	9.8	—	—	—	—	—	—	—	—
1700	—	—	—	—	—	—	—	—	—	—
1800	—	—	—	—	—	—	—	—	—	—
1900	—	—	—	—	—	—	—	—	—	—
2000	—	—	—	—	—	—	—	—	—	—

Medium Static 1190-2170 rpm

NOTE: Fan tables include highest gas heat. Utilize static pressure gain tables for lower gas heat capacities.

48JC(G/H)*05 THREE PHASE – HIGH STATIC — 4 TON VERTICAL SUPPLY (RPM - VDC)

CFM	AVAILABLE EXTERNAL STATIC PRESSURE (IN. WG)									
	0.2		0.4		0.6		0.8		1.0	
	RPM	VDC	RPM	VDC	RPM	VDC	RPM	VDC	RPM	VDC
1200	1190	4.5	1383	5.2	1544	5.8	1685	6.3	1814	6.8
1300	1255	4.7	1441	5.4	1599	6.0	1737	6.5	1863	7.0
1400	1320	5.0	1500	5.6	1654	6.2	1791	6.7	1914	7.2
1500	1388	5.2	1561	5.9	1711	6.4	1845	6.9	1967	7.4
1600	1456	5.5	1623	6.1	1770	6.7	1901	7.1	2020	7.6
1700	1526	5.7	1685	6.3	1829	6.9	1958	7.4	2075	7.8
1800	1596	6.0	1749	6.6	1889	7.1	2016	7.6	2131	8.0
1900	1668	6.3	1814	6.8	1950	7.3	2074	7.8	2188	8.2
2000	1741	6.5	1881	7.1	2012	7.6	2134	8.0	2246	8.4

CFM	AVAILABLE EXTERNAL STATIC PRESSURE (IN. WG)									
	1.2		1.4		1.6		1.8		2.0	
	RPM	VDC	RPM	VDC	RPM	VDC	RPM	VDC	RPM	VDC
1200	1933	7.3	2045	7.7	2151	8.1	2253	8.5	2351	8.8
1300	1980	7.4	2089	7.9	2194	8.2	2293	8.6	2389	9.0
1400	2029	7.6	2136	8.0	2238	8.4	2336	8.8	2430	9.1
1500	2080	7.8	2185	8.2	2285	8.6	2381	9.0	2473	9.3
1600	2131	8.0	2236	8.4	2334	8.8	2428	9.1	2519	9.5
1700	2185	8.2	2287	8.6	2385	9.0	2477	9.3	2566	9.6
1800	2239	8.4	2340	8.8	2436	9.2	2527	9.5	2615	9.8
1900	2295	8.6	2394	9.0	2489	9.4	2579	9.7	—	—
2000	2351	8.8	2449	9.2	2543	9.6	2632	9.9	—	—

High Static 1190-2660 rpm

NOTE: Fan tables include highest gas heat. Utilize static pressure gain tables for lower gas heat capacities.

48JC(G/H)*06 THREE PHASE — 5 TON VERTICAL SUPPLY (RPM - BHP)

CFM	AVAILABLE EXTERNAL STATIC PRESSURE (IN. WG)									
	0.2		0.4		0.6		0.8		1.0	
	RPM	BHP	RPM	BHP	RPM	BHP	RPM	BHP	RPM	BHP
1500	1387	0.28	1561	0.40	1711	0.53	1845	0.66	1967	0.80
1625	1473	0.34	1638	0.46	1784	0.60	1914	0.74	2034	0.89
1750	1561	0.40	1718	0.54	1859	0.68	1987	0.83	2103	0.98
1875	1650	0.47	1798	0.61	1935	0.77	2060	0.92	2174	1.08
2000	1741	0.56	1880	0.70	2012	0.86	2134	1.03	2246	1.20
2125	1832	0.65	1965	0.80	2092	0.97	2210	1.14	2320	1.32
2250	1925	0.75	2050	0.91	2172	1.08	2287	1.26	2394	1.45
2375	2018	0.87	2137	1.03	2254	1.21	2365	1.40	2470	1.59
2500	2113	1.00	2225	1.16	2337	1.35	2444	1.54	2547	1.75

CFM	AVAILABLE EXTERNAL STATIC PRESSURE (IN. WG)									
	1.2		1.4		1.6		1.8		2.0	
	RPM	BHP	RPM	BHP	RPM	BHP	RPM	BHP	RPM	BHP
1500	2079	0.95	2185	1.10	2285	1.26	2381	1.43	2473	1.60
1625	2145	1.04	2249	1.20	2347	1.37	2440	1.53	2530	1.71
1750	2212	1.14	2314	1.31	2410	1.48	2502	1.65	2590	1.84
1875	2280	1.25	2381	1.43	2476	1.60	2566	1.78	2653	1.97
2000	2351	1.37	2449	1.55	2543	1.74	2632	1.93	2717	2.12
2125	2422	1.50	2519	1.69	2611	1.88	2699	2.08	2783	2.28
2250	2495	1.64	2591	1.84	2681	2.04	2767	2.24	—	—
2375	2569	1.79	2663	2.00	2752	2.20	—	—	—	—
2500	2644	1.95	2736	2.17	2824	2.38	—	—	—	—

Standard Static 1387-2150 rpm, 1.06 Max bhp

Medium Static 1387-2390 rpm, 1.44 Max bhp

High Static 1387-2836 rpm, 2.43 Max bhp

NOTE: Fan tables include highest gas heat. Utilize static pressure gain tables for lower gas heat capacities.

48JC(G/H)*06 THREE PHASE — STANDARD STATIC — 5 TON VERTICAL SUPPLY (RPM - VDC)

CFM	AVAILABLE EXTERNAL STATIC PRESSURE (IN. WG)									
	0.2		0.4		0.6		0.8		1.0	
	RPM	VDC	RPM	VDC	RPM	VDC	RPM	VDC	RPM	VDC
1500	1387	6.5	1561	7.3	1711	8.0	1845	8.6	1967	9.1
1625	1473	6.9	1638	7.6	1784	8.3	1914	8.9	2034	9.5
1750	1561	7.3	1718	8.0	1859	8.6	1987	9.2	2103	9.8
1875	1650	7.7	1798	8.4	1935	9.0	2060	9.6	—	—
2000	1741	8.1	1880	8.7	2012	9.4	2134	9.9	—	—
2125	1832	8.5	1965	9.1	2092	9.7	—	—	—	—
2250	1925	9.0	2050	9.5	—	—	—	—	—	—
2375	2018	9.4	2137	9.9	—	—	—	—	—	—
2500	2113	9.8	—	—	—	—	—	—	—	—

CFM	AVAILABLE EXTERNAL STATIC PRESSURE (IN. WG)									
	1.2		1.4		1.6		1.8		2.0	
	RPM	VDC	RPM	VDC	RPM	VDC	RPM	VDC	RPM	VDC
1500	2079	9.7	—	—	—	—	—	—	—	—
1625	2145	10.0	—	—	—	—	—	—	—	—
1750	—	—	—	—	—	—	—	—	—	—
1875	—	—	—	—	—	—	—	—	—	—
2000	—	—	—	—	—	—	—	—	—	—
2125	—	—	—	—	—	—	—	—	—	—
2250	—	—	—	—	—	—	—	—	—	—
2375	—	—	—	—	—	—	—	—	—	—
2500	—	—	—	—	—	—	—	—	—	—

Standard Static 1387-2150 rpm

NOTE: Fan tables include highest gas heat. Utilize static pressure gain tables for lower gas heat capacities.

48JC(G/H)*06 THREE PHASE – MEDIUM STATIC — 5 TON VERTICAL SUPPLY (RPM - VDC)

CFM	AVAILABLE EXTERNAL STATIC PRESSURE (IN. WG)									
	0.2		0.4		0.6		0.8		1.0	
	RPM	VDC	RPM	VDC	RPM	VDC	RPM	VDC	RPM	VDC
1500	1387	5.8	1561	6.5	1711	7.2	1845	7.7	1967	8.2
1625	1473	6.2	1638	6.9	1784	7.5	1914	8.0	2034	8.5
1750	1561	6.5	1718	7.2	1859	7.8	1987	8.3	2103	8.8
1875	1650	6.9	1798	7.5	1935	8.1	2060	8.6	2174	9.1
2000	1741	7.3	1880	7.9	2012	8.4	2134	8.9	2246	9.4
2125	1832	7.7	1965	8.2	2092	8.8	2210	9.2	2320	9.7
2250	1925	8.1	2050	8.6	2172	9.1	2287	9.6	—	—
2375	2018	8.4	2137	8.9	2254	9.4	2365	9.9	—	—
2500	2113	8.8	2225	9.3	2337	9.8	—	—	—	—

CFM	AVAILABLE EXTERNAL STATIC PRESSURE (IN. WG)									
	1.2		1.4		1.6		1.8		2.0	
	RPM	VDC	RPM	VDC	RPM	VDC	RPM	VDC	RPM	VDC
1500	2079	8.7	2185	9.1	2285	9.6	2381	10.0	—	—
1625	2145	9.0	2249	9.4	2347	9.8	—	—	—	—
1750	2212	9.3	2314	9.7	—	—	—	—	—	—
1875	2280	9.5	2381	10.0	—	—	—	—	—	—
2000	2351	9.8	—	—	—	—	—	—	—	—
2125	—	—	—	—	—	—	—	—	—	—
2250	—	—	—	—	—	—	—	—	—	—
2375	—	—	—	—	—	—	—	—	—	—
2500	—	—	—	—	—	—	—	—	—	—

Medium Static 1387-2390 rpm

NOTE: Fan tables include highest gas heat. Utilize static pressure gain tables for lower gas heat capacities.

48JC(G/H)*06 THREE PHASE – HIGH STATIC — 5 TON VERTICAL SUPPLY (RPM - VDC)

CFM	AVAILABLE EXTERNAL STATIC PRESSURE (IN. WG)									
	0.2		0.4		0.6		0.8		1.0	
	RPM	VDC	RPM	VDC	RPM	VDC	RPM	VDC	RPM	VDC
1500	1387	4.9	1561	5.5	1711	6.0	1845	6.5	1967	6.9
1625	1473	5.2	1638	5.8	1784	6.3	1914	6.7	2034	7.2
1750	1561	5.5	1718	6.1	1859	6.6	1987	7.0	2103	7.4
1875	1650	5.8	1798	6.3	1935	6.8	2060	7.3	2174	7.7
2000	1741	6.1	1880	6.6	2012	7.1	2134	7.5	2246	7.9
2125	1832	6.5	1965	6.9	2092	7.4	2210	7.8	2320	8.2
2250	1925	6.8	2050	7.2	2172	7.7	2287	8.1	2394	8.4
2375	2018	7.1	2137	7.5	2254	7.9	2365	8.3	2470	8.7
2500	2113	7.5	2225	7.8	2337	8.2	2444	8.6	2547	9.0

CFM	AVAILABLE EXTERNAL STATIC PRESSURE (IN. WG)									
	1.2		1.4		1.6		1.8		2.0	
	RPM	VDC	RPM	VDC	RPM	VDC	RPM	VDC	RPM	VDC
1500	2079	7.3	2185	7.7	2285	8.1	2381	8.4	2473	8.7
1625	2145	7.6	2249	7.9	2347	8.3	2440	8.6	2530	8.9
1750	2212	7.8	2314	8.2	2410	8.5	2502	8.8	2590	9.1
1875	2280	8.0	2381	8.4	2476	8.7	2566	9.0	2653	9.4
2000	2351	8.3	2449	8.6	2543	9.0	2632	9.3	2717	9.6
2125	2422	8.5	2519	8.9	2611	9.2	2699	9.5	2783	9.8
2250	2495	8.8	2591	9.1	2681	9.5	2767	9.8	–	–
2375	2569	9.1	2663	9.4	2752	9.7	–	–	–	–
2500	2644	9.3	2736	9.6	2824	10.0	–	–	–	–

High Static 1387-2836 rpm

NOTE: Fan tables include highest gas heat. Utilize static pressure gain tables for lower gas heat capacities.

48JC(G/H)*04 THREE PHASE — 3 TON HORIZONTAL SUPPLY (RPM - BHP)

CFM	AVAILABLE EXTERNAL STATIC PRESSURE (IN. WG)									
	0.2		0.4		0.6		0.8		1.0	
	RPM	BHP	RPM	BHP	RPM	BHP	RPM	BHP	RPM	BHP
900	1060	0.08	1292	0.15	1483	0.23	1650	0.31	1798	0.40
975	1106	0.09	1331	0.16	1519	0.24	1683	0.33	1831	0.43
1050	1154	0.11	1371	0.18	1556	0.26	1718	0.35	1864	0.45
1125	1204	0.12	1413	0.20	1594	0.28	1753	0.38	1898	0.48
1200	1255	0.14	1456	0.21	1633	0.30	1790	0.40	1933	0.50
1275	1308	0.16	1500	0.24	1673	0.33	1828	0.43	1969	0.53
1350	1361	0.18	1546	0.26	1715	0.35	1867	0.45	2006	0.56
1425	1416	0.20	1594	0.28	1757	0.38	1907	0.48	2043	0.59
1500	1472	0.22	1642	0.31	1801	0.41	1947	0.51	2082	0.63

CFM	AVAILABLE EXTERNAL STATIC PRESSURE (IN. WG)									
	1.2		1.4		1.6		1.8		2.0	
	RPM	BHP	RPM	BHP	RPM	BHP	RPM	BHP	RPM	BHP
900	1933	0.50	2058	0.61	2175	0.72	2285	0.83	2390	0.95
975	1965	0.53	2089	0.63	2206	0.75	2315	0.86	2419	0.99
1050	1998	0.56	2121	0.66	2237	0.78	2346	0.90	2450	1.02
1125	2030	0.58	2154	0.70	2269	0.81	2377	0.94	2480	1.06
1200	2064	0.61	2186	0.73	2301	0.85	2409	0.97	—	—
1275	2099	0.64	2220	0.76	2333	0.88	2441	1.01	—	—
1350	2134	0.68	2254	0.80	2367	0.92	2474	1.05	—	—
1425	2170	0.71	2289	0.84	2401	0.96	—	—	—	—
1500	2208	0.75	2325	0.88	2436	1.01	—	—	—	—

Standard Static 1060-1890 rpm, 0.44 Max bhp

Medium Static 1060-2190 rpm, 0.71 Max bhp

High Static 1060-2490 rpm, 1.07 Max bhp

NOTE: Fan tables include highest gas heat. Utilize static pressure gain tables for lower gas heat capacities.

48JC(G/H)*04 THREE PHASE – STANDARD STATIC — 3 TON HORIZONTAL SUPPLY (RPM - VDC)

CFM	AVAILABLE EXTERNAL STATIC PRESSURE (IN. WG)									
	0.2		0.4		0.6		0.8		1.0	
	RPM	VDC	RPM	VDC	RPM	VDC	RPM	VDC	RPM	VDC
900	1060	5.6	1292	6.8	1483	7.8	1650	8.7	1798	9.5
975	1106	5.9	1331	7.0	1519	8.0	1683	8.9	1831	9.7
1050	1154	6.1	1371	7.3	1556	8.2	1718	9.1	1864	9.9
1125	1204	6.4	1413	7.5	1594	8.4	1753	9.3	—	—
1200	1255	6.6	1456	7.7	1633	8.6	1790	9.5	—	—
1275	1308	6.9	1500	7.9	1673	8.9	1828	9.7	—	—
1350	1361	7.2	1546	8.2	1715	9.1	1867	9.9	—	—
1425	1416	7.5	1594	8.4	1757	9.3	—	—	—	—
1500	1472	7.8	1642	8.7	1801	9.5	—	—	—	—

CFM	AVAILABLE EXTERNAL STATIC PRESSURE (IN. WG)									
	1.2		1.4		1.6		1.8		2.0	
	RPM	VDC	RPM	VDC	RPM	VDC	RPM	VDC	RPM	VDC
900	—	—	—	—	—	—	—	—	—	—
975	—	—	—	—	—	—	—	—	—	—
1050	—	—	—	—	—	—	—	—	—	—
1125	—	—	—	—	—	—	—	—	—	—
1200	—	—	—	—	—	—	—	—	—	—
1275	—	—	—	—	—	—	—	—	—	—
1350	—	—	—	—	—	—	—	—	—	—
1425	—	—	—	—	—	—	—	—	—	—
1500	—	—	—	—	—	—	—	—	—	—

Standard Static 1060-1890 rpm

NOTE: Fan tables include highest gas heat. Utilize static pressure gain tables for lower gas heat capacities.

48JC(G/H)*04 THREE PHASE – MEDIUM STATIC — 3 TON HORIZONTAL SUPPLY (RPM - VDC)

CFM	AVAILABLE EXTERNAL STATIC PRESSURE (IN. WG)									
	0.2		0.4		0.6		0.8		1.0	
	RPM	VDC	RPM	VDC	RPM	VDC	RPM	VDC	RPM	VDC
900	1060	4.8	1292	5.9	1483	6.8	1650	7.5	1798	8.2
975	1106	5.1	1331	6.1	1519	6.9	1683	7.7	1831	8.4
1050	1154	5.3	1371	6.3	1556	7.1	1718	7.8	1864	8.5
1125	1204	5.5	1413	6.5	1594	7.3	1753	8.0	1898	8.7
1200	1255	5.7	1456	6.6	1633	7.5	1790	8.2	1933	8.8
1275	1308	6.0	1500	6.8	1673	7.6	1828	8.3	1969	9.0
1350	1361	6.2	1546	7.1	1715	7.8	1867	8.5	2006	9.2
1425	1416	6.5	1594	7.3	1757	8.0	1907	8.7	2043	9.3
1500	1472	6.7	1642	7.5	1801	8.2	1947	8.9	2082	9.5

CFM	AVAILABLE EXTERNAL STATIC PRESSURE (IN. WG)									
	1.2		1.4		1.6		1.8		2.0	
	RPM	VDC	RPM	VDC	RPM	VDC	RPM	VDC	RPM	VDC
900	1933	8.8	2058	9.4	2175	9.9	—	—	—	—
975	1965	9.0	2089	9.5	—	—	—	—	—	—
1050	1998	9.1	2121	9.7	—	—	—	—	—	—
1125	2030	9.3	2154	9.8	—	—	—	—	—	—
1200	2064	9.4	2186	10.0	—	—	—	—	—	—
1275	2099	9.6	—	—	—	—	—	—	—	—
1350	2134	9.7	—	—	—	—	—	—	—	—
1425	2170	9.9	—	—	—	—	—	—	—	—
1500	—	—	—	—	—	—	—	—	—	—

Medium Static 1060-2190 rpm

NOTE: Fan tables include highest gas heat. Utilize static pressure gain tables for lower gas heat capacities.

48JC(G/H)*04 THREE PHASE – HIGH STATIC — 3 TON HORIZONTAL SUPPLY (RPM - VDC)

CFM	AVAILABLE EXTERNAL STATIC PRESSURE (IN. WG)									
	0.2		0.4		0.6		0.8		1.0	
	RPM	VDC	RPM	VDC	RPM	VDC	RPM	VDC	RPM	VDC
900	1060	4.3	1292	5.2	1483	6.0	1650	6.6	1798	7.2
975	1106	4.4	1331	5.3	1519	6.1	1683	6.8	1831	7.4
1050	1154	4.6	1371	5.5	1556	6.2	1718	6.9	1864	7.5
1125	1204	4.8	1413	5.7	1594	6.4	1753	7.0	1898	7.6
1200	1255	5.0	1456	5.8	1633	6.6	1790	7.2	1933	7.8
1275	1308	5.3	1500	6.0	1673	6.7	1828	7.3	1969	7.9
1350	1361	5.5	1546	6.2	1715	6.9	1867	7.5	2006	8.1
1425	1416	5.7	1594	6.4	1757	7.1	1907	7.7	2043	8.2
1500	1472	5.9	1642	6.6	1801	7.2	1947	7.8	2082	8.4

CFM	AVAILABLE EXTERNAL STATIC PRESSURE (IN. WG)									
	1.2		1.4		1.6		1.8		2.0	
	RPM	VDC	RPM	VDC	RPM	VDC	RPM	VDC	RPM	VDC
900	1933	7.8	2058	8.3	2175	8.7	2285	9.2	2390	9.6
975	1965	7.9	2089	8.4	2206	8.9	2315	9.3	2419	9.7
1050	1998	8.0	2121	8.5	2237	9.0	2346	9.4	2450	9.8
1125	2030	8.2	2154	8.7	2269	9.1	2377	9.5	2480	10.0
1200	2064	8.3	2186	8.8	2301	9.2	2409	9.7	—	—
1275	2099	8.4	2220	8.9	2333	9.4	2441	9.8	—	—
1350	2134	8.6	2254	9.1	2367	9.5	2474	9.9	—	—
1425	2170	8.7	2289	9.2	2401	9.6	—	—	—	—
1500	2208	8.9	2325	9.3	2436	9.8	—	—	—	—

High Static 1060-2490 rpm

NOTE: Fan tables include highest gas heat. Utilize static pressure gain tables for lower gas heat capacities.

48JC(G/H)*05 THREE PHASE — 4 TON HORIZONTAL SUPPLY (RPM - BHP)

CFM	AVAILABLE EXTERNAL STATIC PRESSURE (IN. WG)									
	0.2		0.4		0.6		0.8		1.0	
	RPM	BHP	RPM	BHP	RPM	BHP	RPM	BHP	RPM	BHP
1200	1148	0.16	1343	0.26	1507	0.37	1651	0.48	1781	0.60
1300	1209	0.19	1397	0.29	1557	0.40	1698	0.52	1826	0.65
1400	1271	0.22	1452	0.33	1608	0.44	1747	0.57	1873	0.70
1500	1335	0.25	1508	0.36	1661	0.49	1797	0.62	1921	0.75
1600	1401	0.29	1565	0.41	1714	0.53	1848	0.67	1971	0.81
1700	1468	0.33	1624	0.45	1769	0.59	1900	0.73	2020	0.87
1800	1537	0.38	1685	0.51	1825	0.64	1953	0.79	2072	0.94
1900	1606	0.44	1747	0.56	1882	0.70	2008	0.85	2124	1.01
2000	1676	0.50	1810	0.63	1940	0.77	2063	0.93	2177	1.09

CFM	AVAILABLE EXTERNAL STATIC PRESSURE (IN. WG)									
	1.2		1.4		1.6		1.8		2.0	
	RPM	BHP	RPM	BHP	RPM	BHP	RPM	BHP	RPM	BHP
1200	1902	0.73	2015	0.87	2122	1.02	2223	1.17	2320	1.33
1300	1945	0.78	2056	0.93	2161	1.07	2261	1.23	2356	1.39
1400	1990	0.84	2099	0.98	2202	1.13	2300	1.29	2395	1.46
1500	2036	0.89	2143	1.04	2245	1.20	2342	1.36	2435	1.53
1600	2084	0.96	2190	1.11	2290	1.27	2385	1.44	2477	1.61
1700	2132	1.02	2237	1.18	2336	1.35	2430	1.52	2520	1.69
1800	2182	1.10	2285	1.26	2383	1.43	2476	1.60	2565	1.78
1900	2232	1.17	2334	1.34	2431	1.52	2523	1.70	2611	1.88
2000	2284	1.26	2385	1.43	2480	1.61	2571	1.79	2658	1.98

Standard Static 1148-1900 rpm, 0.72 Max bhp

Medium Static 1148-2170 rpm, 1.06 Max bhp

High Static 1148-2660 rpm, 1.96 Max bhp

NOTE: Fan tables include highest gas heat. Utilize static pressure gain tables for lower gas heat capacities.

48JC(G/H)*05 THREE PHASE – STANDARD STATIC — 4 TON HORIZONTAL SUPPLY (RPM - VDC)

CFM	AVAILABLE EXTERNAL STATIC PRESSURE (IN. WG)									
	0.2		0.4		0.6		0.8		1.0	
	RPM	VDC	RPM	VDC	RPM	VDC	RPM	VDC	RPM	VDC
1200	1148	6.0	1343	7.1	1507	7.9	1651	8.7	1781	9.4
1300	1209	6.4	1397	7.4	1557	8.2	1698	8.9	1826	9.6
1400	1271	6.7	1452	7.6	1608	8.5	1747	9.2	1873	9.9
1500	1335	7.0	1508	7.9	1661	8.7	1797	9.5	—	—
1600	1401	7.4	1565	8.2	1714	9.0	1848	9.7	—	—
1700	1468	7.7	1624	8.5	1769	9.3	1900	10.0	—	—
1800	1537	8.1	1685	8.9	1825	9.6	—	—	—	—
1900	1606	8.5	1747	9.2	1882	9.9	—	—	—	—
2000	1676	8.8	1810	9.5	—	—	—	—	—	—

CFM	AVAILABLE EXTERNAL STATIC PRESSURE (IN. WG)									
	1.2		1.4		1.6		1.8		2.0	
	RPM	VDC	RPM	VDC	RPM	VDC	RPM	VDC	RPM	VDC
1200	—	—	—	—	—	—	—	—	—	—
1300	—	—	—	—	—	—	—	—	—	—
1400	—	—	—	—	—	—	—	—	—	—
1500	—	—	—	—	—	—	—	—	—	—
1600	—	—	—	—	—	—	—	—	—	—
1700	—	—	—	—	—	—	—	—	—	—
1800	—	—	—	—	—	—	—	—	—	—
1900	—	—	—	—	—	—	—	—	—	—
2000	—	—	—	—	—	—	—	—	—	—

Standard Static 1148-1900 rpm

NOTE: Fan tables include highest gas heat. Utilize static pressure gain tables for lower gas heat capacities.

48JC(G/H)*05 THREE PHASE – MEDIUM STATIC — 4 TON HORIZONTAL SUPPLY (RPM - VDC)

CFM	AVAILABLE EXTERNAL STATIC PRESSURE (IN. WG)									
	0.2		0.4		0.6		0.8		1.0	
	RPM	VDC	RPM	VDC	RPM	VDC	RPM	VDC	RPM	VDC
1200	1148	5.3	1343	6.2	1507	6.9	1651	7.6	1781	8.2
1300	1209	5.6	1397	6.4	1557	7.2	1698	7.8	1826	8.4
1400	1271	5.9	1452	6.7	1608	7.4	1747	8.1	1873	8.6
1500	1335	6.2	1508	6.9	1661	7.7	1797	8.3	1921	8.9
1600	1401	6.5	1565	7.2	1714	7.9	1848	8.5	1971	9.1
1700	1468	6.8	1624	7.5	1769	8.2	1900	8.8	2020	9.3
1800	1537	7.1	1685	7.8	1825	8.4	1953	9.0	2072	9.5
1900	1606	7.4	1747	8.1	1882	8.7	2008	9.3	2124	9.8
2000	1676	7.7	1810	8.3	1940	8.9	2063	9.5	—	—

CFM	AVAILABLE EXTERNAL STATIC PRESSURE (IN. WG)									
	1.2		1.4		1.6		1.8		2.0	
	RPM	VDC	RPM	VDC	RPM	VDC	RPM	VDC	RPM	VDC
1200	1902	8.8	2015	9.3	2122	9.8	—	—	—	—
1300	1945	9.0	2056	9.5	2161	10.0	—	—	—	—
1400	1990	9.2	2099	9.7	—	—	—	—	—	—
1500	2036	9.4	2143	9.9	—	—	—	—	—	—
1600	2084	9.6	—	—	—	—	—	—	—	—
1700	2132	9.8	—	—	—	—	—	—	—	—
1800	—	—	—	—	—	—	—	—	—	—
1900	—	—	—	—	—	—	—	—	—	—
2000	—	—	—	—	—	—	—	—	—	—

Medium Static 1148-2170 rpm

NOTE: Fan tables include highest gas heat. Utilize static pressure gain tables for lower gas heat capacities.

48JC(G/H)*05 THREE PHASE – HIGH STATIC — 4 TON HORIZONTAL SUPPLY (RPM - VDC)

CFM	AVAILABLE EXTERNAL STATIC PRESSURE (IN. WG)									
	0.2		0.4		0.6		0.8		1.0	
	RPM	VDC	RPM	VDC	RPM	VDC	RPM	VDC	RPM	VDC
1200	1148	4.3	1343	5.0	1507	5.7	1651	6.2	1781	6.7
1300	1209	4.5	1397	5.3	1557	5.9	1698	6.4	1826	6.9
1400	1271	4.8	1452	5.5	1608	6.0	1747	6.6	1873	7.0
1500	1335	5.0	1508	5.7	1661	6.2	1797	6.8	1921	7.2
1600	1401	5.3	1565	5.9	1714	6.4	1848	6.9	1971	7.4
1700	1468	5.5	1624	6.1	1769	6.7	1900	7.1	2020	7.6
1800	1537	5.8	1685	6.3	1825	6.9	1953	7.3	2072	7.8
1900	1606	6.0	1747	6.6	1882	7.1	2008	7.5	2124	8.0
2000	1676	6.3	1810	6.8	1940	7.3	2063	7.8	2177	8.2

CFM	AVAILABLE EXTERNAL STATIC PRESSURE (IN. WG)									
	1.2		1.4		1.6		1.8		2.0	
	RPM	VDC	RPM	VDC	RPM	VDC	RPM	VDC	RPM	VDC
1200	1902	7.2	2015	7.6	2122	8.0	2223	8.4	2320	8.7
1300	1945	7.3	2056	7.7	2161	8.1	2261	8.5	2356	8.9
1400	1990	7.5	2099	7.9	2202	8.3	2300	8.6	2395	9.0
1500	2036	7.7	2143	8.1	2245	8.4	2342	8.8	2435	9.2
1600	2084	7.8	2190	8.2	2290	8.6	2385	9.0	2477	9.3
1700	2132	8.0	2237	8.4	2336	8.8	2430	9.1	2520	9.5
1800	2182	8.2	2285	8.6	2383	9.0	2476	9.3	2565	9.6
1900	2232	8.4	2334	8.8	2431	9.1	2523	9.5	2611	9.8
2000	2284	8.6	2385	9.0	2480	9.3	2571	9.7	2658	10.0

High Static 1148-2660 rpm

NOTE: Fan tables include highest gas heat. Utilize static pressure gain tables for lower gas heat capacities.

48JC(G/H)*06 THREE PHASE — 5 TON HORIZONTAL SUPPLY (RPM - BHP)

CFM	AVAILABLE EXTERNAL STATIC PRESSURE (IN. WG)									
	0.2		0.4		0.6		0.8		1.0	
	RPM	BHP	RPM	BHP	RPM	BHP	RPM	BHP	RPM	BHP
1500	1335	0.25	1507	0.36	1660	0.49	1797	0.62	1921	0.75
1625	1418	0.30	1580	0.42	1727	0.55	1861	0.68	1983	0.83
1750	1502	0.36	1655	0.48	1796	0.61	1926	0.76	2046	0.91
1875	1589	0.42	1731	0.55	1867	0.69	1994	0.84	2111	0.99
2000	1677	0.50	1810	0.63	1941	0.77	2063	0.93	2177	1.09
2125	1766	0.58	1891	0.71	2015	0.86	2133	1.02	2245	1.19
2250	1855	0.67	1973	0.81	2091	0.96	2206	1.13	2314	1.31
2375	1946	0.78	2057	0.92	2169	1.07	2280	1.25	2385	1.43
2500	2037	0.89	2142	1.03	2249	1.20	2355	1.37	2457	1.56

CFM	AVAILABLE EXTERNAL STATIC PRESSURE (IN. WG)									
	1.2		1.4		1.6		1.8		2.0	
	RPM	BHP	RPM	BHP	RPM	BHP	RPM	BHP	RPM	BHP
1500	2036	0.89	2143	1.04	2245	1.20	2342	1.36	2435	1.53
1625	2096	0.97	2201	1.13	2301	1.29	2396	1.46	2488	1.63
1750	2157	1.06	2261	1.22	2359	1.39	2453	1.56	2542	1.74
1875	2220	1.16	2322	1.32	2419	1.49	2511	1.67	2599	1.85
2000	2284	1.26	2385	1.43	2480	1.61	2571	1.79	2658	1.98
2125	2350	1.37	2449	1.55	2543	1.73	2633	1.92	2719	2.12
2250	2417	1.49	2514	1.67	2607	1.87	2695	2.06	2780	2.26
2375	2485	1.62	2581	1.81	2672	2.01	2759	2.21	—	—
2500	2555	1.76	2649	1.96	2738	2.16	2824	2.37	—	—

Standard Static 1335-2150 rpm, 1.06 Max bhp

Medium Static 1335-2390 rpm, 1.44 Max bhp

High Static 1335-2836 rpm, 2.43 Max bhp

NOTE: Fan tables include highest gas heat. Utilize static pressure gain tables for lower gas heat capacities.

48JC(G/H)*06 THREE PHASE – STANDARD STATIC — 5 TON HORIZONTAL SUPPLY (RPM - VDC)

CFM	AVAILABLE EXTERNAL STATIC PRESSURE (IN. WG)									
	0.2		0.4		0.6		0.8		1.0	
	RPM	VDC	RPM	VDC	RPM	VDC	RPM	VDC	RPM	VDC
1500	1335	6.2	1507	7.0	1660	7.7	1797	8.4	1921	8.9
1625	1418	6.6	1580	7.3	1727	8.0	1861	8.7	1983	9.2
1750	1502	7.0	1655	7.7	1796	8.4	1926	9.0	2046	9.5
1875	1589	7.4	1731	8.1	1867	8.7	1994	9.3	2111	9.8
2000	1677	7.8	1810	8.4	1941	9.0	2063	9.6	—	—
2125	1766	8.2	1891	8.8	2015	9.4	2133	9.9	—	—
2250	1855	8.6	1973	9.2	2091	9.7	—	—	—	—
2375	1946	9.1	2057	9.6	—	—	—	—	—	—
2500	2037	9.5	2142	10.0	—	—	—	—	—	—

CFM	AVAILABLE EXTERNAL STATIC PRESSURE (IN. WG)									
	1.2		1.4		1.6		1.8		2.0	
	RPM	VDC	RPM	VDC	RPM	VDC	RPM	VDC	RPM	VDC
1500	2036	9.5	2143	10.0	—	—	—	—	—	—
1625	2096	9.7	—	—	—	—	—	—	—	—
1750	—	—	—	—	—	—	—	—	—	—
1875	—	—	—	—	—	—	—	—	—	—
2000	—	—	—	—	—	—	—	—	—	—
2125	—	—	—	—	—	—	—	—	—	—
2250	—	—	—	—	—	—	—	—	—	—
2375	—	—	—	—	—	—	—	—	—	—
2500	—	—	—	—	—	—	—	—	—	—

Standard Static 1335-2150 rpm

NOTE: Fan tables include highest gas heat. Utilize static pressure gain tables for lower gas heat capacities.

48JC(G/H)*06 THREE PHASE – MEDIUM STATIC — 5 TON HORIZONTAL SUPPLY (RPM - VDC)

CFM	AVAILABLE EXTERNAL STATIC PRESSURE (IN. WG)									
	0.2		0.4		0.6		0.8		1.0	
	RPM	VDC	RPM	VDC	RPM	VDC	RPM	VDC	RPM	VDC
1500	1335	5.6	1507	6.3	1660	6.9	1797	7.5	1921	8.0
1625	1418	5.9	1580	6.6	1727	7.2	1861	7.8	1983	8.3
1750	1502	6.3	1655	6.9	1796	7.5	1926	8.1	2046	8.6
1875	1589	6.6	1731	7.2	1867	7.8	1994	8.3	2111	8.8
2000	1677	7.0	1810	7.6	1941	8.1	2063	8.6	2177	9.1
2125	1766	7.4	1891	7.9	2015	8.4	2133	8.9	2245	9.4
2250	1855	7.8	1973	8.3	2091	8.7	2206	9.2	2314	9.7
2375	1946	8.1	2057	8.6	2169	9.1	2280	9.5	2385	10.0
2500	2037	8.5	2142	9.0	2249	9.4	2355	9.9	—	—

CFM	AVAILABLE EXTERNAL STATIC PRESSURE (IN. WG)									
	1.2		1.4		1.6		1.8		2.0	
	RPM	VDC	RPM	VDC	RPM	VDC	RPM	VDC	RPM	VDC
1500	2036	8.5	2143	9.0	2245	9.4	2342	9.8	—	—
1625	2096	8.8	2201	9.2	2301	9.6	—	—	—	—
1750	2157	9.0	2261	9.5	2359	9.9	—	—	—	—
1875	2220	9.3	2322	9.7	—	—	—	—	—	—
2000	2284	9.6	2385	10.0	—	—	—	—	—	—
2125	2350	9.8	—	—	—	—	—	—	—	—
2250	—	—	—	—	—	—	—	—	—	—
2375	—	—	—	—	—	—	—	—	—	—
2500	—	—	—	—	—	—	—	—	—	—

Medium Static 1335-2390 rpm

NOTE: Fan tables include highest gas heat. Utilize static pressure gain tables for lower gas heat capacities.

48JC(G/H)*06 THREE PHASE – HIGH STATIC — 5 TON HORIZONTAL SUPPLY (RPM - VDC)

CFM	AVAILABLE EXTERNAL STATIC PRESSURE (IN. WG)									
	0.2		0.4		0.6		0.8		1.0	
	RPM	VDC	RPM	VDC	RPM	VDC	RPM	VDC	RPM	VDC
1500	1335	4.7	1507	5.3	1660	5.9	1797	6.3	1921	6.8
1625	1418	5.0	1580	5.6	1727	6.1	1861	6.6	1983	7.0
1750	1502	5.3	1655	5.8	1796	6.3	1926	6.8	2046	7.2
1875	1589	5.6	1731	6.1	1867	6.6	1994	7.0	2111	7.4
2000	1677	5.9	1810	6.4	1941	6.8	2063	7.3	2177	7.7
2125	1766	6.2	1891	6.7	2015	7.1	2133	7.5	2245	7.9
2250	1855	6.5	1973	7.0	2091	7.4	2206	7.8	2314	8.2
2375	1946	6.9	2057	7.3	2169	7.6	2280	8.0	2385	8.4
2500	2037	7.2	2142	7.6	2249	7.9	2355	8.3	2457	8.7

CFM	AVAILABLE EXTERNAL STATIC PRESSURE (IN. WG)									
	1.2		1.4		1.6		1.8		2.0	
	RPM	VDC	RPM	VDC	RPM	VDC	RPM	VDC	RPM	VDC
1500	2036	7.2	2143	7.6	2245	7.9	2342	8.3	2435	8.6
1625	2096	7.4	2201	7.8	2301	8.1	2396	8.4	2488	8.8
1750	2157	7.6	2261	8.0	2359	8.3	2453	8.6	2542	9.0
1875	2220	7.8	2322	8.2	2419	8.5	2511	8.9	2599	9.2
2000	2284	8.1	2385	8.4	2480	8.7	2571	9.1	2658	9.4
2125	2350	8.3	2449	8.6	2543	9.0	2633	9.3	2719	9.6
2250	2417	8.5	2514	8.9	2607	9.2	2695	9.5	2780	9.8
2375	2485	8.8	2581	9.1	2672	9.4	2759	9.7	—	—
2500	2555	9.0	2649	9.3	2738	9.7	2824	10.0	—	—

High Static 1335-2836 rpm

NOTE: Fan tables include highest gas heat. Utilize static pressure gain tables for lower gas heat capacities.

APPENDIX D — WIRING DIAGRAMS

48JC(G/H)*04-06 Units — Wiring Diagrams

CONTROLLER	VOLTAGE	CONTROL WIRING DIAGRAM	PAGE	POWER WIRING DIAGRAM	PAGE
48JC(G/H)*04-06 with SystemVu Controller	208/230-3-60	48TC004528	65	48TC004529	66
	460-3-60			48TC004530	67

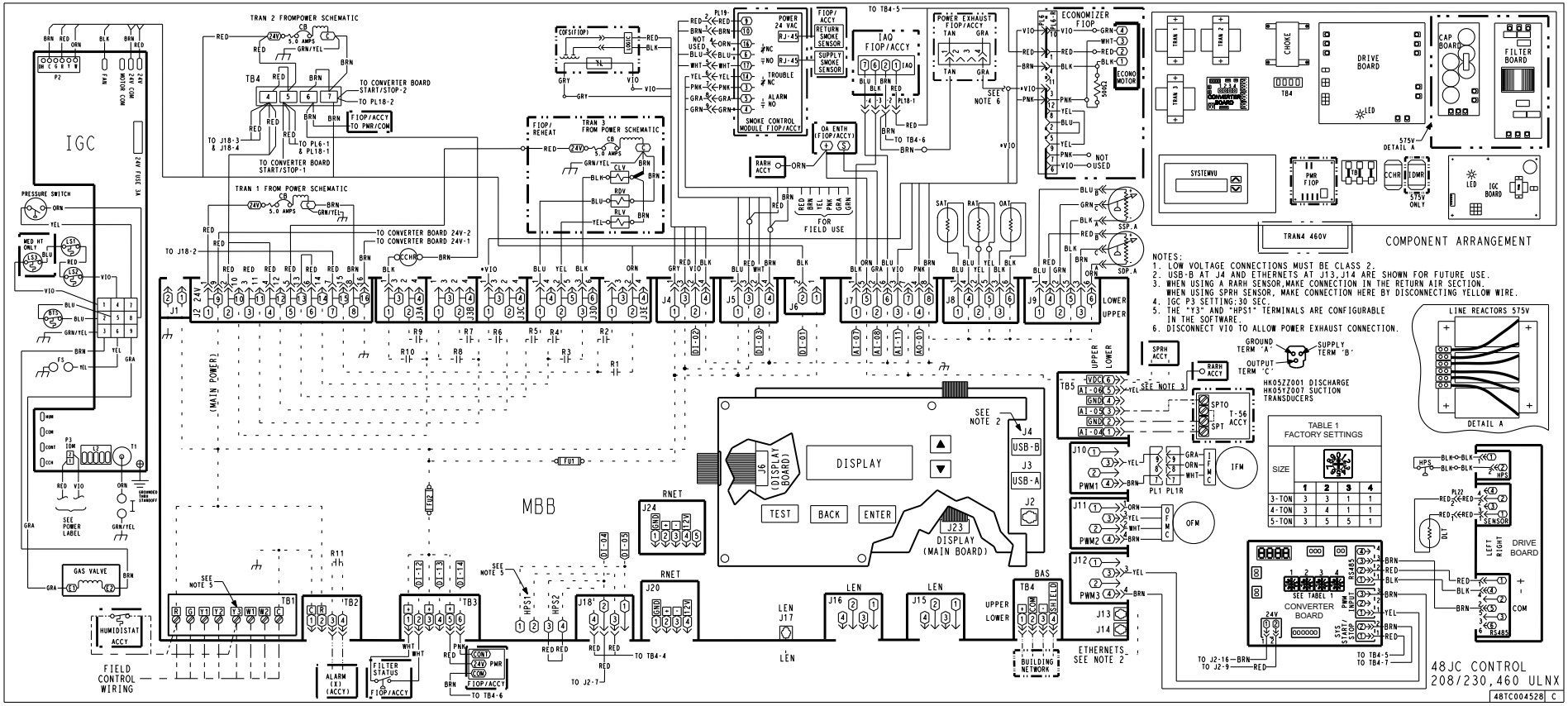

Fig. B — 48JC(G/H)*04-06 — Control Wiring Diagram — 208/230, 460-3-60 — Ultra Low NOx Unit with SystemVu Controller

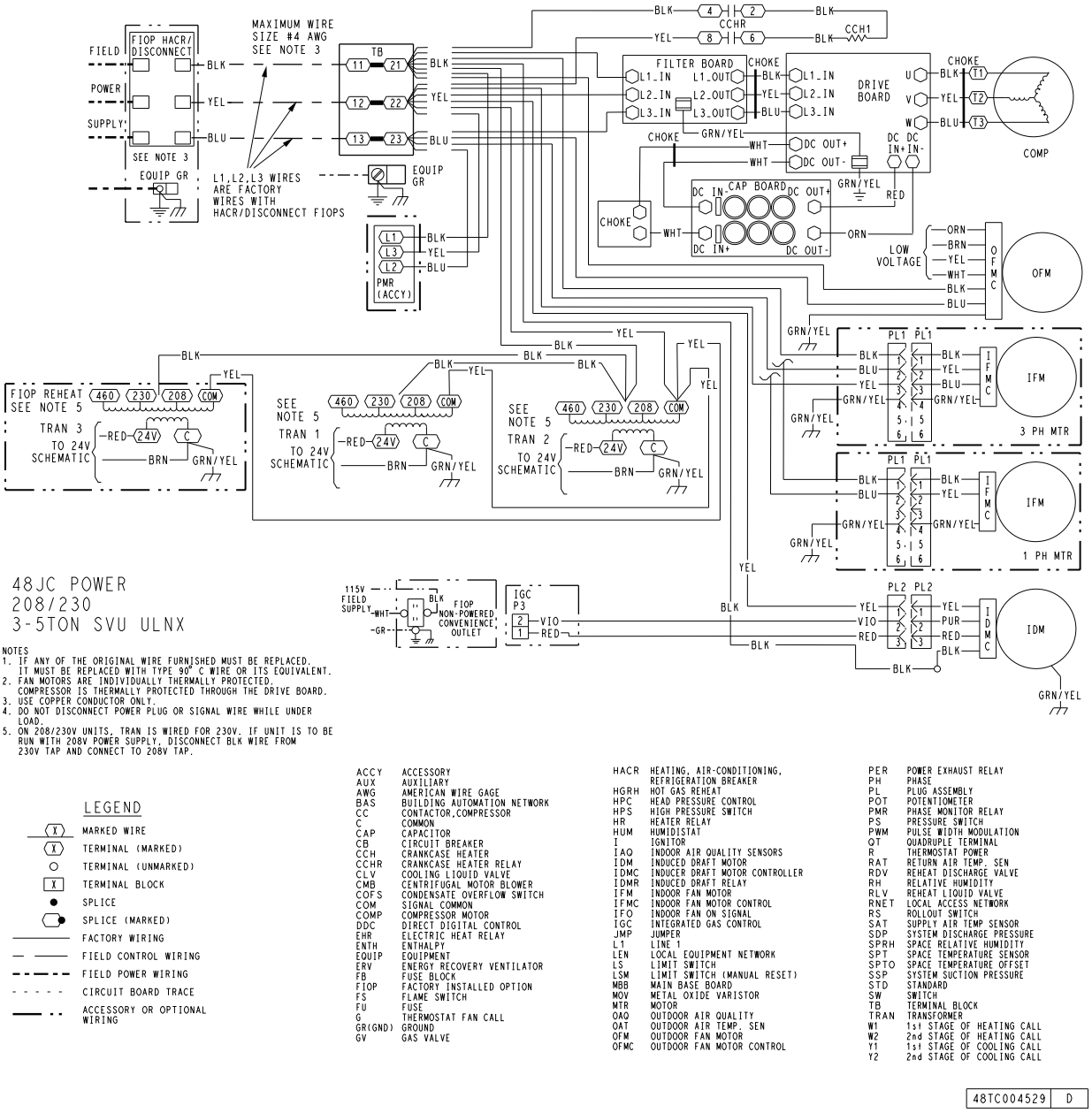

NOTES
1. IF ANY OF THE ORIGINAL WIRE FURNISHED MUST BE REPLACED, IT MUST BE REPLACED WITH TYPE 90° C WIRE OR ITS EQUIVALENT.
2. FAN MOTORS ARE INDIVIDUALLY THERMALLY PROTECTED. COMPRESSOR IS THERMALLY PROTECTED THROUGH THE DRIVE BOARD.
3. USE COPPER CONDUCTOR ONLY.
4. DO NOT DISCONNECT POWER PLUG OR SIGNAL WIRE WHILE UNDER LOAD.
5. ON 208/230V UNITS, TRAN IS WIRED FOR 230V. IF UNIT IS TO BE RUN WITH 208V POWER SUPPLY, DISCONNECT BLK WIRE FROM 230V TAP AND CONNECT TO 208V TAP.

LEGEND

- MARKED WIRE
- TERMINAL (MARKED)
- TERMINAL (UNMARKED)
- TERMINAL BLOCK
- SPLICE
- SPLICE (MARKED)
- FACTORY WIRING
- FIELD CONTROL WIRING
- FIELD POWER WIRING
- CIRCUIT BOARD TRACE
- ACCESSORY OR OPTIONAL WIRING

ACCY	ACCESSORY
AUX	AUXILIARY
AWG	AMERICAN WIRE GAGE
BAS	BUILDING AUTOMATION NETWORK
CC	CONTACTOR,COMPRESSOR
C	COMMON
CAP	CAPACITOR
CB	CIRCUIT BREAKER
CCH	CRANKCASE HEATER
CCHR	CRANKCASE HEATER RELAY
CLV	COOLING LIQUID VALVE
CMB	CENTRIFUGAL MOTOR BLOWER
COFS	CONDENSATE OVERFLOW SWITCH
COM	SIGNAL COMMON
COMP	COMPRESSOR MOTOR
DDC	DIRECT DIGITAL CONTROL
EHR	ELECTRIC HEAT RELAY
ENTH	ENTHALPY
EQUIP	EQUIPMENT
ERV	ENERGY RECOVERY VENTILATOR
FB	FUSE BLOCK
FIOP	FACTORY INSTALLED OPTION
FS	FLAME SWITCH
FU	FUSE
G	THERMOSTAT FAN CALL
GR(GND)	GROUND
GV	GAS VALVE
HACR	HEATING, AIR-CONDITIONING, REFRIGERATION BREAKER
HGRH	HOT GAS REHEAT
HPC	HEAD PRESSURE CONTROL
HPS	HIGH PRESSURE SWITCH
HR	HEATER RELAY
HUM	HUMIDISTAT
I	IGNITOR
IAQ	INDOOR AIR QUALITY SENSORS
IDM	INDUCED DRAFT MOTOR
IDMC	INDUCER DRAFT MOTOR CONTROLLER
IDMR	INDUCED DRAFT RELAY
IFM	INDOOR FAN MOTOR
IFMC	INDOOR FAN MOTOR CONTROL
IFO	INDOOR FAN ON SIGNAL
IGC	INTEGRATED GAS CONTROL
JMP	JUMPER
L1	LINE 1
LEN	LOCAL EQUIPMENT NETWORK
LS	LIMIT SWITCH
LSM	LIMIT SWITCH (MANUAL RESET)
MBB	MAIN BASE BOARD
MOV	METAL OXIDE VARISTOR
MTR	MOTOR
OAQ	OUTDOOR AIR QUALITY
OAT	OUTDOOR AIR TEMP. SEN
OFM	OUTDOOR FAN MOTOR
OFMC	OUTDOOR FAN MOTOR CONTROL
PER	POWER EXHAUST RELAY
PH	PHASE
PL	PLUG ASSEMBLY
POT	POTENTIOMETER
PMR	PHASE MONITOR RELAY
PS	PRESSURE SWITCH
PWM	PULSE WIDTH MODULATION
QT	QUADRUPLE TERMINAL
R	THERMOSTAT POWER
RAT	RETURN AIR TEMP. SEN
RDV	REHEAT DISCHARGE VALVE
RH	RELATIVE HUMIDITY
RLV	REHEAT LIQUID VALVE
RNET	LOCAL ACCESS NETWORK
RS	ROLLOUT SWITCH
SAT	SUPPLY AIR TEMP SENSOR
SDP	SYSTEM DISCHARGE PRESSURE
SPRH	SPACE RELATIVE HUMIDITY
SPT	SPACE TEMPERATURE SENSOR
SPTO	SPACE TEMPERATURE OFFSET
SSP	SYSTEM SUCTION PRESSURE
STD	STANDARD
SW	SWITCH
TB	TERMINAL BLOCK
TRAN	TRANSFORMER
W1	1st STAGE OF HEATING CALL
W2	2nd STAGE OF HEATING CALL
Y1	1st STAGE OF COOLING CALL
Y2	2nd STAGE OF COOLING CALL

48TC004529 | D

Fig. C — 48JC(G/H)*04-06 — Power Wiring Diagram — 208/230-3-60 — Ultra Low NOx Unit with SystemVu Controller

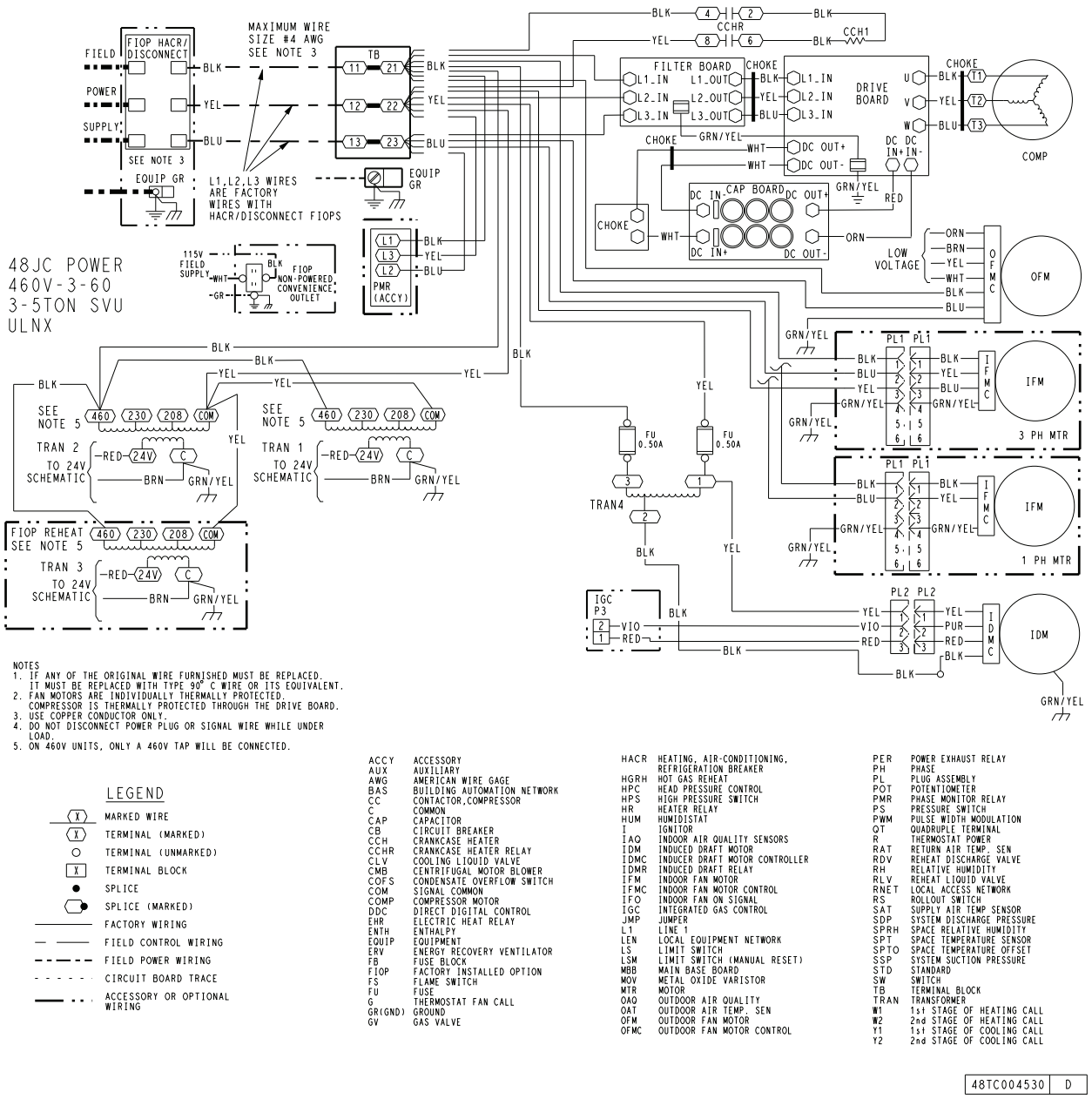

NOTES
1. IF ANY OF THE ORIGINAL WIRE FURNISHED MUST BE REPLACED. IT MUST BE REPLACED WITH TYPE 90° C WIRE OR ITS EQUIVALENT.
2. FAN MOTORS ARE INDIVIDUALLY THERMALLY PROTECTED. COMPRESSOR IS THERMALLY PROTECTED THROUGH THE DRIVE BOARD.
3. USE COPPER CONDUCTOR ONLY.
4. DO NOT DISCONNECT POWER PLUG OR SIGNAL WIRE WHILE UNDER LOAD.
5. ON 460V UNITS, ONLY A 460V TAP WILL BE CONNECTED.

LEGEND

- MARKED WIRE
- TERMINAL (MARKED)
- TERMINAL (UNMARKED)
- TERMINAL BLOCK
- SPLICE
- SPLICE (MARKED)
- FACTORY WIRING
- FIELD CONTROL WIRING
- FIELD POWER WIRING
- CIRCUIT BOARD TRACE
- ACCESSORY OR OPTIONAL WIRING

ACCY	ACCESSORY
AUX	AUXILIARY
AWG	AMERICAN WIRE GAGE
BAS	BUILDING AUTOMATION NETWORK
CC	CONTACTOR,COMPRESSOR
C	COMMON
CAP	CAPACITOR
CB	CIRCUIT BREAKER
CCH	CRANKCASE HEATER
CCHR	CRANKCASE HEATER RELAY
CLV	COOLING LIQUID VALVE
CMB	CENTRIFUGAL MOTOR BLOWER
COFS	CONDENSATE OVERFLOW SWITCH
COM	SIGNAL COMMON
COMP	COMPRESSOR MOTOR
DDC	DIRECT DIGITAL CONTROL
EHR	ELECTRIC HEAT RELAY
ENTH	ENTHALPY
EQUIP	EQUIPMENT
ERV	ENERGY RECOVERY VENTILATOR
FB	FUSE BLOCK
FIOP	FACTORY INSTALLED OPTION
FS	FLAME SWITCH
FU	FUSE
G	THERMOSTAT FAN CALL
GR(GND)	GROUND
GV	GAS VALVE
HACR	HEATING, AIR-CONDITIONING, REFRIGERATION BREAKER
HGRH	HOT GAS REHEAT
HPC	HEAD PRESSURE CONTROL
HPS	HIGH PRESSURE SWITCH
HR	HEATER RELAY
HUM	HUMIDISTAT
I	IGNITOR
IAQ	INDOOR AIR QUALITY SENSORS
IDM	INDUCED DRAFT MOTOR
IDMC	INDUCER DRAFT MOTOR CONTROLLER
IDMR	INDUCED DRAFT RELAY
IFM	INDOOR FAN MOTOR
IFMC	INDOOR FAN MOTOR CONTROL
IFO	INDOOR FAN ON SIGNAL
IGC	INTEGRATED GAS CONTROL
JMP	JUMPER
L1	LINE 1
LEN	LOCAL EQUIPMENT NETWORK
LS	LIMIT SWITCH
LSM	LIMIT SWITCH (MANUAL RESET)
MBB	MAIN BASE BOARD
MOV	METAL OXIDE VARISTOR
MTR	MOTOR
OAQ	OUTDOOR AIR QUALITY
OAT	OUTDOOR AIR TEMP. SEN
OFM	OUTDOOR FAN MOTOR
OFMC	OUTDOOR FAN MOTOR CONTROL
PER	POWER EXHAUST RELAY
PH	PHASE
PL	PLUG ASSEMBLY
POT	POTENTIOMETER
PMR	PHASE MONITOR RELAY
PS	PRESSURE SWITCH
PWM	PULSE WIDTH MODULATION
QT	QUADRUPLE TERMINAL
R	THERMOSTAT POWER
RAT	RETURN AIR TEMP. SEN
RDV	REHEAT DISCHARGE VALVE
RH	RELATIVE HUMIDITY
RLV	REHEAT LIQUID VALVE
RNET	LOCAL ACCESS NETWORK
RS	ROLLOUT SWITCH
SAT	SUPPLY AIR TEMP SENSOR
SDP	SYSTEM DISCHARGE PRESSURE
SPRH	SPACE RELATIVE HUMIDITY
SPT	SPACE TEMPERATURE SENSOR
SPTO	SPACE TEMPERATURE OFFSET
SSP	SYSTEM SUCTION PRESSURE
STD	STANDARD
SW	SWITCH
TB	TERMINAL BLOCK
TRAN	TRANSFORMER
W1	1st STAGE OF HEATING CALL
W2	2nd STAGE OF HEATING CALL
Y1	1st STAGE OF COOLING CALL
Y2	2nd STAGE OF COOLING CALL

48TC004530 | D

Fig. D — 48JC(G/H)*04-06 — Power Wiring Diagram — 460-3-60 — Ultra Low NOx Unit with SystemVu Controller

© 2025 Carrier

START-UP CHECKLIST

48JC(G/H)*04-06 SINGLE PACKAGE ROOFTOP GAS HEATING/ELECTRIC COOLING UNIT

(Remove and use for job file)

NOTE: To avoid injury to personnel and damage to equipment or property when completing the procedures listed in this start-up checklist, use good judgment, follow safe practices, and adhere to the safety considerations/information as outlined in preceding sections of this Service and Maintenance Instruction document.

I. PRELIMINARY INFORMATION

MODEL NO. _____

JOB NAME_____

SERIAL NO. _____

ADDRESS _____

START-UP DATE _____

TECHNICIAN NAME _____

ADDITIONAL ACCESSORIES

_____

II. PRE-START-UP

Verify that all packaging materials have been removed from unit	(Y/N) _____
Verify installation of outdoor air hood	(Y/N) _____
Verify installation of flue exhaust and inlet hood	(Y/N) _____
Verify that condensate connection is installed per instructions	(Y/N) _____
Verify that all electrical connections and terminals are tight	(Y/N) _____
Verify gas pressure to unit gas valve is within specified range	(Y/N) _____
Verify ground integrity with a continuity test	(Y/N) _____
Check gas piping for leaks	(Y/N) _____
Verify the gas orifice placement dimension (Ultra Low NOx models only) is as shown in the gas piping section	(Y/N) _____
Check that indoor-air filters are clean and in place	(Y/N) _____
Check that outdoor air inlet screens are in place	(Y/N) _____
Verify that unit is level	(Y/N) _____
Verify that fan assembly is free of obstructions and rotor spins freely	(Y/N) _____
Verify that scroll compressors are rotating in the correct direction	(Y/N) _____
Verify installation of thermostat	(Y/N) _____
Verify that crankcase heaters have been energized for at least 24 hours	(Y/N) _____

III. START-UP

ELECTRICAL

Supply Voltage	L1-L2_____	L2-L3_____	L3-L1_____
Compressor Amps 1	L1 _____	L2 _____	L3 _____
Compressor Amps 2	L1 _____	L2 _____	L3 _____
Supply Fan Amps	L1 _____	L2 _____	L3 _____

TEMPERATURES

Outdoor-air Temperature	_____ °F DB (Dry Bulb)	
Return-air Temperature	_____ °F DB	_____ °F WB (Wet Bulb)
Cooling Supply Air Temperature	_____ °F	
Gas Heat Supply Air	_____ °F	

Manufacturer reserves the right to discontinue, or change at any time, specifications or designs without notice and without incurring obligations.

PRESSURES

Gas Inlet Pressure in. wg		_____	in. wg
Gas Manifold Pressure	STAGE 1	_____	in. wg
	STAGE 2	_____	in. wg
Refrigerant Suction		_____	psig
Refrigerant Discharge		_____	psig
Verify Refrigerant Charge using Charging Charts		(Y/N) _____	

GENERAL

Economizer minimum vent and changeover settings to job requirements (if equipped) (Y/N) _____

Verify smoke detector unit shutdown by utilizing magnet test (Y/N) _____

IV. HUMIDI-MIZER® SYSTEM START-UP

STEPS

1. Check UCB (Unit Control Board) for jumper 1, 2, 3 (Jumper 1, 2, 3 must be cut and open) (Y/N) _____
2. Open humidistat contacts (Y/N) _____
3. Start unit In cooling (Close Y1) (Y/N) _____

OBSERVE AND RECORD

A. Suction pressure _____ psig

B. Discharge pressure _____ psig

C. Entering air temperature _____ °F

D. Liquid line temperature at outlet or reheat coil _____ °F

E. Confirm correct rotation for compressor (Y/N) _____

F. Check for correct ramp-up of outdoor fan motor as condenser coil warms (Y/N) _____

4. Switch unit to high-latent mode (sub-cooler) by closing humidistat with Y1 closed (Y/N) _____
5. Check unit charge per charging chart (Y/N) _____

OBSERVE

A. Reduction in suction pressure (5 to 7 psi expected) (Y/N) _____

B. Discharge pressure unchanged (Y/N) _____

C. Liquid temperature drops to 50 to 55°F range (Y/N) _____

D. LSV solenoid energized (valve closes) (Y/N) _____

6. Switch unit to dehumid (reheat) by opening Y1 (Y/N) _____

OBSERVE

A. Suction pressure increases to normal cooling level

B. Discharge pressure decreases (35 to 50 psi) (Limited by head pressure control)

C. Liquid temperature returns to normal cooling level

D. LSV solenoid energized (valve closes)

E. DSV solenoid energized, valve opens

7. With unit in dehumid mode close W1 compressor and outdoor fan stop; LSV and DSV solenoids de-energized (Y/N) _____
8. Open W1 restore unit to dehumid mode (Y/N) _____
9. Open humidistat input compressor and outdoor fan stop; LSV and DSV solenoids de-energized (Y/N) _____
10. Restore set points for thermostat and humidistat (Y/N) _____

CUT ALONG DOTTED LINE

CUT ALONG DOTTED LINE

© 2025 Carrier