# VRF Indoor Unit
# 40VMF015---3 — 4-Way Cassette

bryant
Heating & Cooling Systems

# Submittal Data

Job Data _____ Location _____
Buyer _____ Buyer PO # _____ Carrier # _____
Unit Number _____ Model Number _____
Performance Data Certified By _____ Date _____

**STANDARD FEATURES**

- Delivers air in all four directions
- Knock Out for OA Opening
- Louver Control (Fixed or Swing)
- Three Fan Speeds – High, Medium and Low
- Built-in Condensate Lift Mechanism
- Built-in EXV (Electronic Expansion Valve) for Installation Ease

| Indoor Unit Model | | 40VMF015---3 |
|---|---|---|
| PERFORMANCE | | |
| Cooling Rated Capacity | Btu/h | 15,000 |
| Heating Rated Capacity | Btu/h | 17,000 |
| Airflow (H / M / L) | CFM | 560 / 460 / 400 |
| Sound Pressure (H / M / L) | dBA | 37.3 / 34.0 / 32.4 |
| ELECTRICAL | | |
| Power Supply | V/Ph/Hz | 208-230/1/60 |
| Indoor Fan Motor Power Consumption (Input) | W | 23 |
| Minimum Circuit Amps | A | 0.98 |
| Maximum Overcurrent Protection | A | 15 |
| Motor Type | | DC |

| PHYSICAL DATA | | |
|---|---|---|
| Pipe Connection Size - Liquid | in. | 1/4 (OD) |
| Pipe Connection Size - Suction | in. | 1/2 (OD) |
| Pipe Connection Size - Drain | in. | 1-1/4 (OD) |
| Refrigerant | | R-410A |
| Unit Width | in. | 33-1/8 |
| Unit Height | in. | 9 |
| Unit Depth | in. | 33-1/8 |
| Unit Net Weight | lbs. | 54 |
| Panel Width | in. | 37-3/8 |
| Panel Height | in. | 1-3/4 |
| Panel Depth | in. | 37-3/8 |
| Panel Net Weight | lbs. | 13.2 |

**ACCESSORIES (Optional)**

- ☐ Wireless Remote Controller 40VM900001
- ☐ Wired Remote Controller - Non-Prog. 40VM900002
- ☐ Wired Remote Controller - Prog. 40VM900003
- ☐ Centralized Controller 40VM900004
- ☐ Touch Screen Wired Controller 40VM900005
- ☐ Touch Screen Central Controller 40VM900006

Manufacturer reserves the right to discontinue, or change at any time, specifications or designs without notice and without incurring obligations.

# DIMENSIONAL DRAWING
# INDOOR UNIT 4-WAY CASSETTE 40VMF015---3

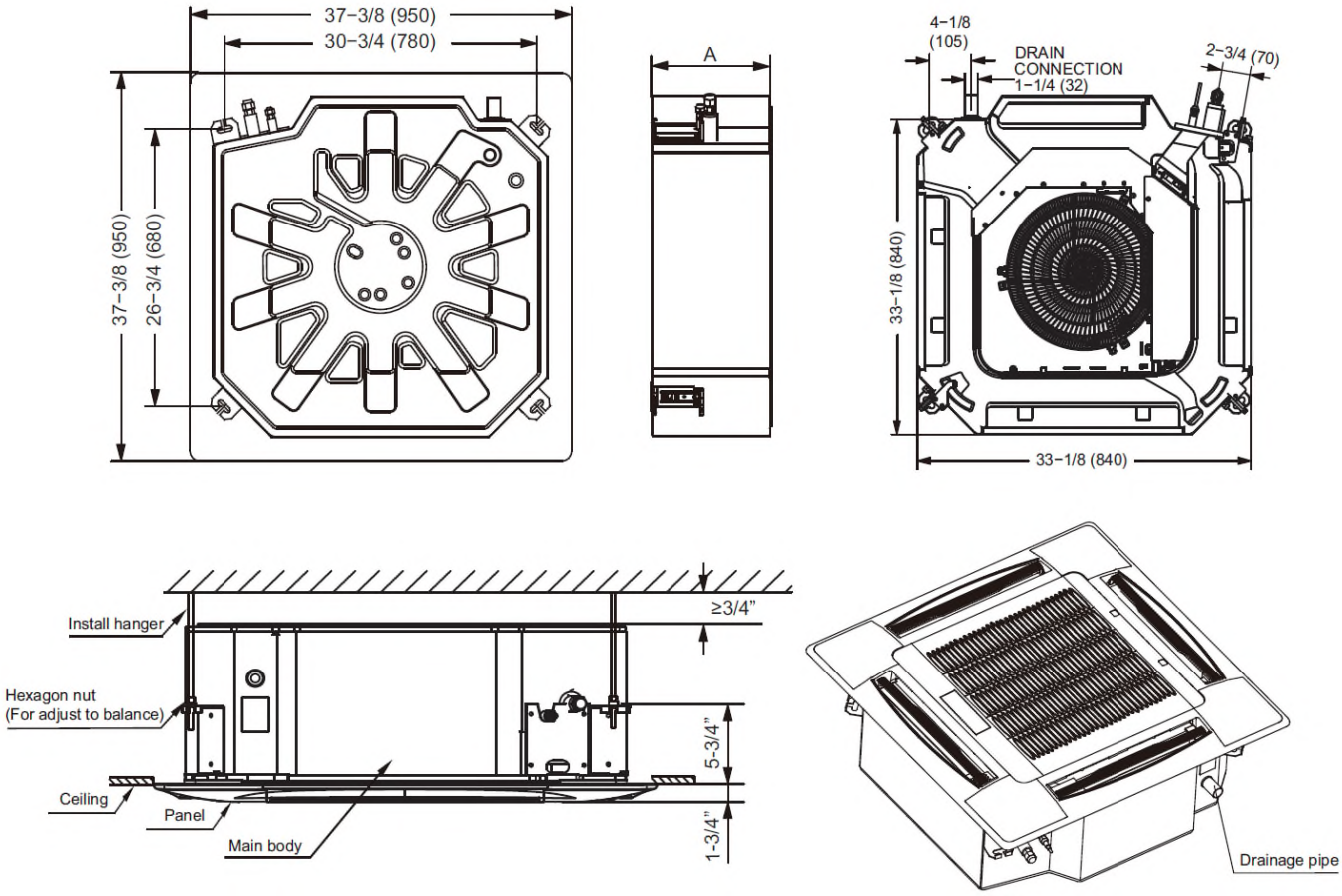


| 40VMF UNIT SIZE | DIMENSION (in.) |
|---|---|
| | A |
| 015 | 9 |

NOTE: All dimensions shown in inches.

© Bryant Heating & Cooling Systems