VRF Indoor Unit
40VMW009---3 — High Wall

bryant®
Heating & Cooling Systems

Submittal Data

Job Name _____ Location _____
Tag _____

STANDARD FEATURES

- Dual Guided Air Design Provides Smoother and More Comfortable Air Flow
- Three Fan Speeds - High, Medium and Low
- Front Panel Lifts Up 65 Degrees Providing Ease of Maintenance
- Heating Mode, Swing Angle for Louver is 68 to 110 Degrees in Auto Mode
- Non-Heating Mode, Swing Angle for Louver is 61 to 93 Degrees in Auto Mode
- Manual Setting for Louver, Swing Angle Between 61 and 110 Degrees
- Multi-Refrigerant Outlet Piping Methods - Left, Right or Rear
- Built in EXV (Electronic Expansion Valve) for Installation Ease

Indoor Unit Model		40VMW009---3
PERFORMANCE		
Total Cooling Rated Capacity	Btu/h	9,630
Sensible Cooling Capacity	Btu/h	6,520
Total Heating Rated Capacity	Btu/h	10,900
Airflow (H / M / L)	CFM	320 / 270 / 245
Sound Pressure (H / M / L)	dBA	34.5 / 32.6 / 31.8
ELECTRICAL		
Power Supply	V/Ph/Hz	208-230/1/60
Indoor Fan Motor Power Consumption (Input)	W	25
Minimum Circuit Amps	A	0.45
Maximum Overcurrent Protection	A	15
Motor Type		DC

PHYSICAL DATA		
Pipe Connection Size - Liquid	in.	1/4 (OD)
Pipe Connection Size - Suction	in.	1/2 (OD)
Pipe Connection Size - Drain	in.	3/4 NPT (OD)
Refrigerant		R-410A
Unit Width	in.	36
Unit Height	in.	11-3/8
Unit Depth	in.	9
Unit Net Weight	lb	28

ACCESSORIES (Optional)

- ☐ Wireless Remote Controller 40VM900001
- ☐ Wired Remote Controller - Non-Prog. 40VM900012
- ☐ Wired Remote Controller - Prog. 40VM900013
- ☐ Touch Screen Wired Controller 40VM900005
- ☐ Touch Screen Central Controller 40VM900006

Manufacturer reserves the right to discontinue, or change at any time, specifications or designs without notice and without incurring obligations.

DIMENSIONAL DRAWING
INDOOR UNIT HIGH WALL 40VMW009---3

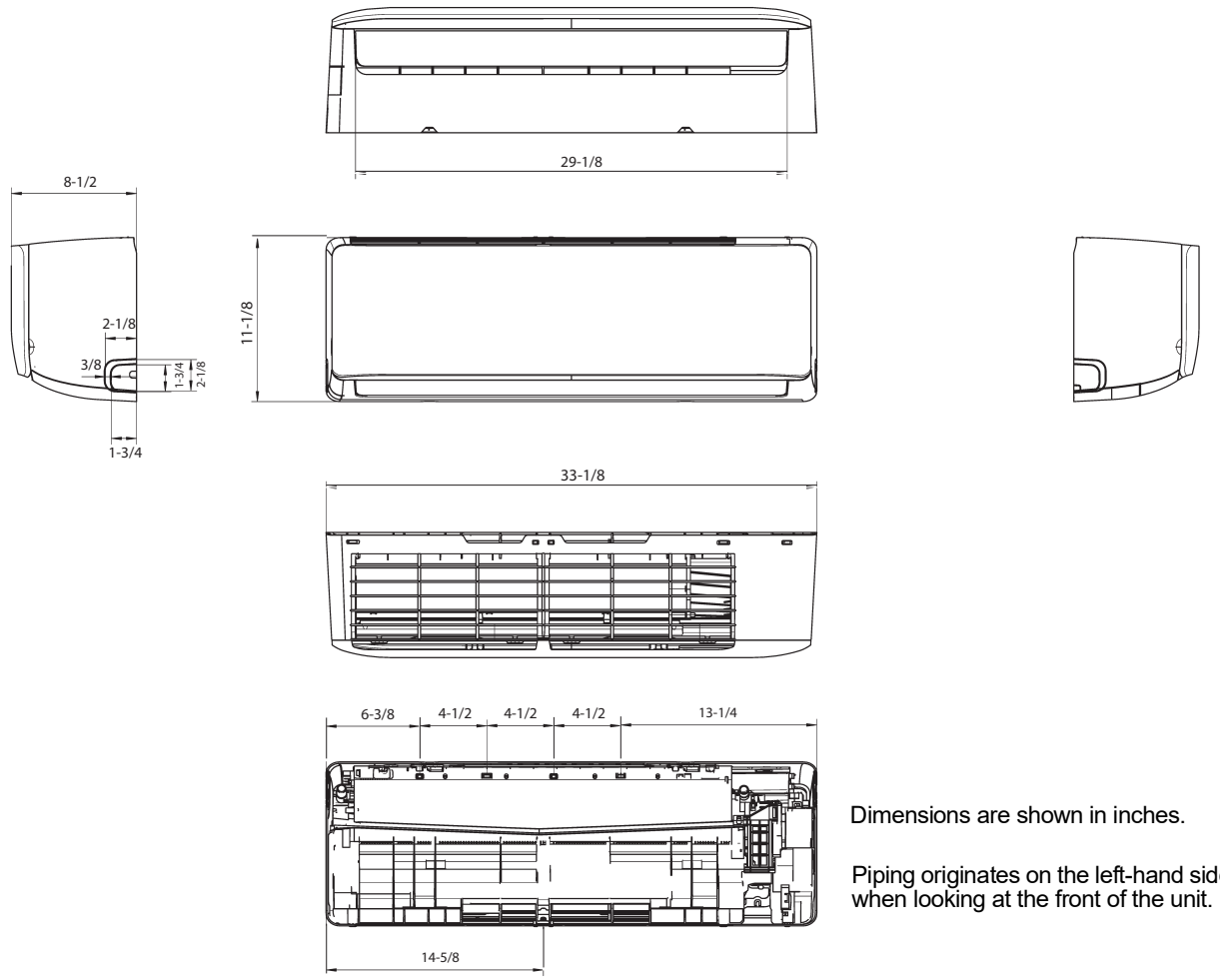

Dimensions are shown in inches.

Piping originates on the left-hand side when looking at the front of the unit.

MOUNTING PLATE
INDOOR UNIT HIGH WALL 40VMW009---3

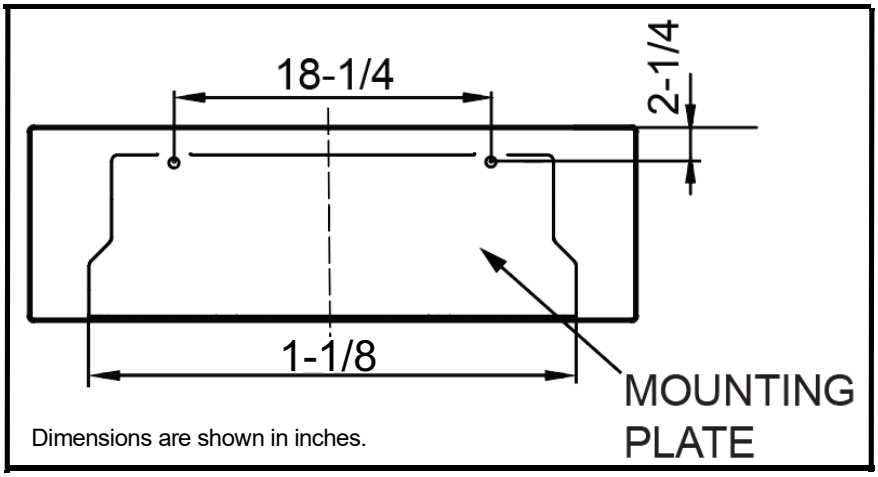

© Bryant Heating & Cooling Systems 2020