38VMH036-060
Outdoor Unit for
Single-Phase Variable Refrigerant Flow (VRF) Heat Pump Systems

Installation and Maintenance Instructions

CONTENTS

Page

SAFETY CONSIDERATIONS 1
GENERAL 2
INSTALLATION 4
Step 1 — Unpack and Inspect Units 4
Step 2 — Position the Unit 4
Step 3 — Connect Refrigerant Piping and Wiring 5
Step 4 — Pressure and Vacuum Test System . . . 8
Step 5 — Adjust Refrigerant Charge 8
Step 6 — Complete Electrical Connections 9
START-UP 13
Trial Run 13
Error Codes 13
Unit Settings 14
Pre-Start Check 15
MAINTENANCE 15

SAFETY CONSIDERATIONS

Improper installation, adjustment, alteration, service, maintenance, or use can cause explosion, fire, electrical shock, or other conditions, which may cause death, personal injury or property damage. The qualified installer or agency must use factory-authorized kits or accessories when modifying this product.

Follow all safety codes. Wear safety glasses, protective clothing, and work gloves. Use quenching cloth for brazing operations. Have fire extinguisher available. Read these instructions thoroughly and follow all warnings or cautions included in literature and attached to the unit. Consult local building codes and the current editions of the National Electrical Code (NEC) ANSI/NFPA (American National Standards Institute/National Fire Protection Association) 70. In Canada, refer to the current editions of the Canadian Electrical Code CSA (Canadian Standards Association) C22.1.

Understand the signal words — DANGER, WARNING, and CAUTION. DANGER identifies the most serious hazards, which will result in severe personal injury or death. WARNING signifies hazards that could result in personal injury or death. CAUTION is used to identify unsafe practices, which would result in minor personal injury or product and property damage.

Recognize safety information. This is the safety-alert symbol (⚠). When this symbol is displayed on the unit and in instructions or manuals, be alert to the potential for personal injury. Installing, starting up, and servicing equipment can be hazardous due to system pressure, electrical components, and equipment location.

⚠ WARNING

Electrical shock can cause personal injury and death. Shut off all power to this equipment during installation. There may be more than one disconnect switch. Tag all disconnect locations to alert others not to restore power until work is completed.

Manufacturer reserves the right to discontinue, or change at any time, specifications or designs without notice and without incurring obligations.

⚠ WARNING

When installing the equipment in a small space, provide adequate measures to avoid refrigerant concentration exceeding safety limits due to refrigerant leak. In case of refrigerant leak during installation, ventilate the space immediately. Failure to follow this procedure may lead to personal injury.

⚠ WARNING

DO NOT USE TORCH to remove any component. The system contains oil and refrigerant under pressure.

To remove a component, wear protective gloves and goggles and proceed as follows:

a. Shut off electrical power to unit.
b. Recover refrigerant to relieve all pressure from the system using both high-pressure and low pressure ports.
c. Traces of vapor should be displaced with nitrogen, and the work area should be well ventilated. Refrigerant in contact with an open flame produces toxic gases.
d. Cut component connection tubing with a tubing cutter and remove component from unit. Use a pan to catch any oil that may come out of the lines and as a gage for how much oil to add to the system.
e. Carefully unsweat remaining tubing stubs when necessary. Oil can ignite when exposed to a torch flame.

Failure to follow these procedures may result in personal injury or death.

⚠ CAUTION

DO NOT re-use compressor oil or any oil that has been exposed to the atmosphere. Dispose of oil per local codes and regulations. DO NOT leave refrigerant system open to air any longer than the actual time required to service the equipment. Seal circuits being serviced and charge with dry nitrogen to prevent oil contamination when timely repairs cannot be completed. Failure to follow these procedures may result in damage to equipment.

GENERAL

The VRF (variable refrigerant flow) heat pump system offers a variety of indoor unit types and sizes, ranging from 0.5 to 6 tons. The 38VMA single-phase heat pump outdoor units are available in three capacities (3, 4, and 5 tons). The system has the capability to operate between 50% and 130% connected capacity, allowing the system to be tailored to the needs of the customer and the application.

The equipment is initially protected under the manufacturer's standard warranty; however, the warranty is provided under the condition that the steps outlined in this manual for initial inspection, proper installation, regular periodic maintenance, and everyday operation of the unit be followed in detail. This manual should be fully reviewed in advance before initial installation, start-up, and any maintenance. Contact your local sales representative or the factory with any questions BEFORE proceeding.

See Fig. 1 for model number nomenclature. Table 1 shows components that may or may not be used for a particular installation. Table 2 lists physical data for each unit size. Figure 2 shows unit dimensions.

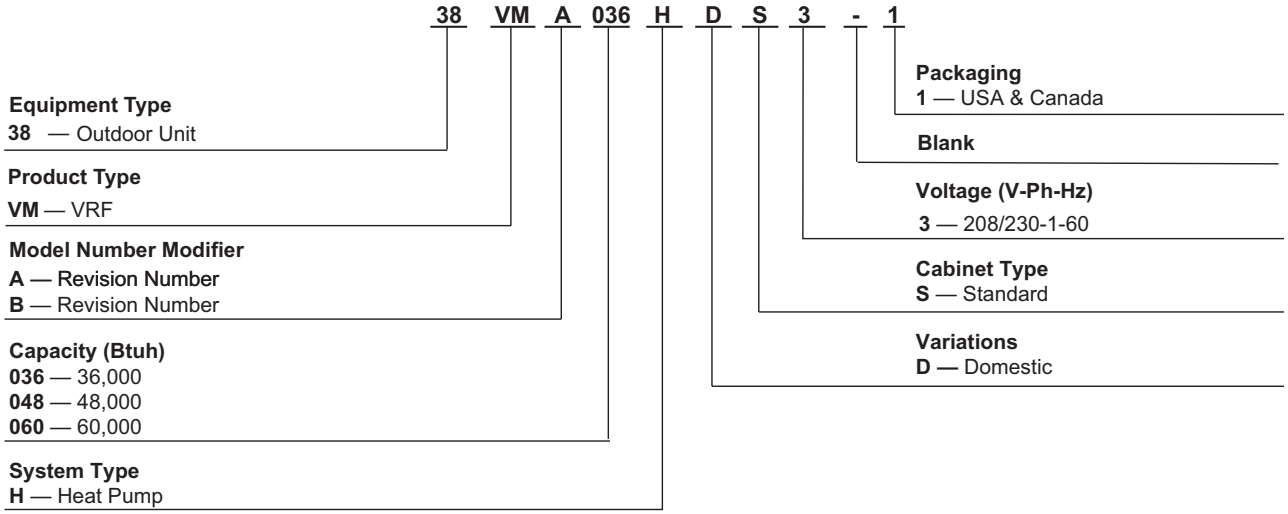

Fig. 1 —Model Number Nomenclature

Table 1 — Components Shipped with Unit

NAME	SHAPE	QUANTITY	FUNCTION
Main Drain Connection	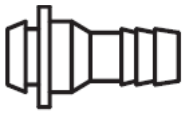	1	For maintenance
Adapter	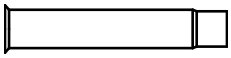	1	For suction pipe connection (3/4 in. to 5/8 in.)

Table 2 — 38VMH Physical Data

UNIT		036	048	060
NOMINAL TONS (Ton)		3	4	5
POWER SUPPLY (V-Ph-Hz)*		208/230-1-60		
COOLING CAPACITY WITH NON-DUCTED & DUCTED INDOOR UNITS†				
Nominal (kBtu/h)		36	48	60
Rated (kBtu/h)		36	48	60
HEATING CAPACITY WITH NON-DUCTED & DUCTED INDOOR UNITS†				
Nominal (kBtu/h)		40	52.5	66
Rated (kBtu/h)		40	52.5	66
ELECTRICAL CHARACTERISTICS WITH NON-DUCTED INDOOR UNITS				
Cooling	Power Consumption (kW)	3.10	4.60	6.10
	EER (Btu/Wh)	12.10	11.00	9.50
	SEER (Btu/Wh)	19.20	19.20	18.60
Heating	Power Consumption (kW)	3.10	4.30	5.80
	COP (W/W)	3.62	3.42	3.19
	HSPF (Btu/Wh)	9.20	9.20	10.00
ELECTRICAL CHARACTERISTICS WITH DUCTED INDOOR UNITS				
Cooling	Power Consumption (kW)	2.90	4.70	6.10
	EER (Btu/Wh)	11.90	9.80	9.30
	SEER (Btu/Wh)	17.80	17.80	18.20
Heating	Power Consumption (kW)	3.00	4.20	5.70
	COP (W/W)	3.68	3.54	3.26
	HSPF (Btu/Wh)	9.60	9.60	10.00
UNIT DIMENSIONS (W x H x D) (in.)		35 1/2 x 52 1/4 x 15 3/4		
UNIT NET WEIGHT (lb)		220		
COMPRESSOR TYPE		Hermetic Rotary DC Inverter Compressor		
FAN UNIT				
Air Volume (cfm)		4100		
Motor Output (W)		90+90		
REFRIGERANT SHIPPING CHARGE (lb)**		8.6		
REFRIGERANT CONNECTING PORT DIAMETER				
Suction Side (in.)		5/8		3/4
Liquid Side (in.)		3/8		
OPERATION TEMPERATURE RANGE				
Cooling (F db)		5~118		
Heating (F wb)****		-13~64		
MAX NUMBER OF CONNECTED INDOOR UNITS		5	7	9
MAXIMUM CAPACITY OF COMBINED INDOOR UNITS ††		50%~130%		
SOUND PRESSURE LEVEL (db(A))***		58.7	60.1	60.7

LEGEND

COP — Coefficient of Performance
db — Dry Bulb
EER — Energy Efficiency Ratio
ESP — External Static Pressure
wb — Wet Bulb

* The source voltage must not fluctuate more than ± 10%.

† Rated conditions:
Cooling: Indoor air temperature 80°F dry bulb / 67°F wet bulb, Outdoor air temperature 95°F dry bulb
Heating: Indoor air temperature 70°F dry bulb, Outdoor air temperature 47°F dry bulb / 43°F wet bulb

** The amount does not consider extra piping length. Refrigerant must be added on site in accordance with the actual piping length.

†† In case the diversity exceeds 135%, the type of indoor unit is limited and the maximum number of indoor unit is reduced.

*** These values, measured in anechoic chamber at a point 1 m in front of the unit at a height of 1.4 m. During actual operation, these values are normally somewhat higher as a result of ambient conditions.

**** Unit may operate in Heating mode in outdoor ambient temperatures down to -13°F wb as long as unit was started when ambient temperature was 5°F wb or warmer.

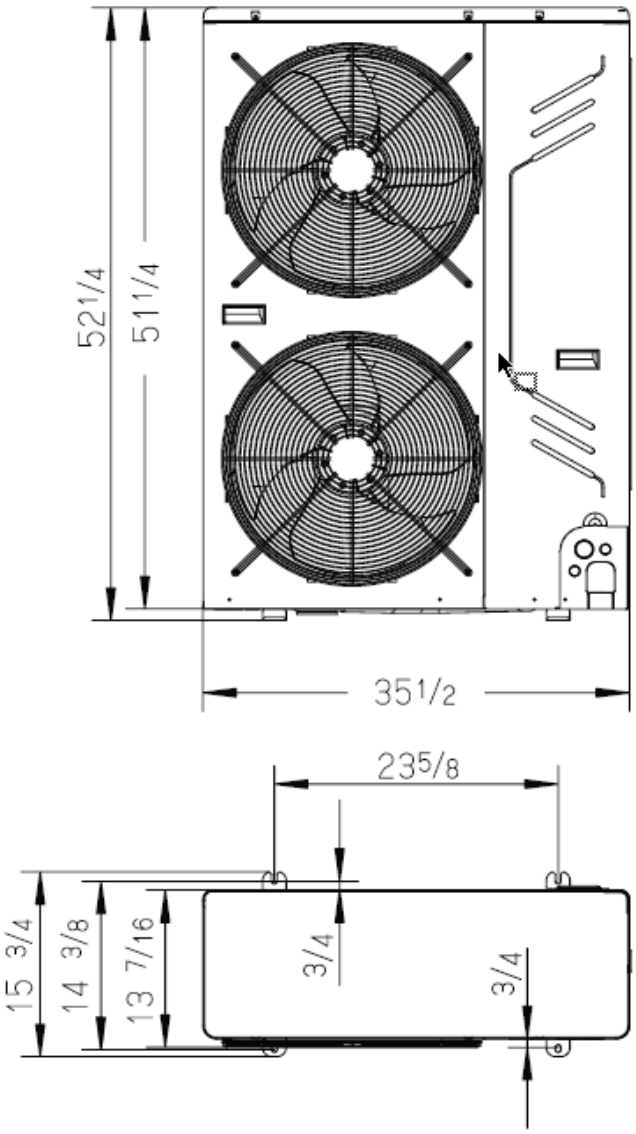

NOTE: All dimensions shown in inches.

Fig. 2 —38VMAH Dimensions

INSTALLATION

Step 1 — Unpack and Inspect Units — Units are packaged for shipment to avoid damage during normal transit and handling. It is the receiving party's responsibility to inspect the equipment upon arrival. Any obvious damage to the carton and/or its contents should be reported on the bill of lading, and a claim should be filed with the transportation company and the factory. The unit should always be stored in a dry place and in the proper orientation as marked on the carton.

After determining the condition of the unit exterior, carefully remove the packaging and inspect for hidden damage. Check to make sure that items (thermostats, controllers, etc.) are accounted for whether packaged separately or shipped at a later date. Any hidden damage should be recorded, a claim should be filed with the transportation company, and the factory should be notified. In the event a claim for shipping damage is filed; the unit, shipping carton, and all packing must be retained for physical inspection by the transportation company. All units should be stored in the factory shipping carton with internal packaging in place until installation.

PROTECTING UNITS FROM DAMAGE — Do not apply force or pressure to the coil, piping, or drain stub-outs during handling. All units should be handled using proper forklift holes or lifting locations.

Unit must always be properly supported. Temporary supports used during installation or service must be adequate to hold unit securely. To maintain warranty; protect units against hostile environments, theft, vandalism, and debris on jobsite. Do not allow foreign material to fall into unit. Failure to do so may have serious adverse effects on unit operation. Failure of any unit caused by deposits of foreign material inside unit will not be covered by manufacturer's warranty. Some units and/or job conditions may require some form of temporary covering during construction.

PREPARING JOBSITE FOR UNIT INSTALLATION — To save time and to reduce the possibility of costly errors, set up a complete sample installation in a typical location at jobsite. Check all critical dimensions such as pipe and wire connection requirements. Refer to job drawings and product dimension drawings as required. Instruct all trades in their parts of the installation. Units must be installed in compliance with all applicable local code requirements.

IDENTIFYING AND PREPARING UNITS — Be sure power requirements match the available power source. Refer to unit nameplate and wiring diagram. In addition:

- Check all tags on the unit to determine if shipping screws are to be removed. Remove screws as directed.
- Rotate the fan blade by hand to ensure that the fan is unrestricted and can rotate freely. Check for shipping damage and fan obstructions.

Step 2 — Position the Unit — Units are recommended for outdoor use. To ensure there is enough space for installation and maintenance of single, multiple, or parallel unit installation, see Figs. 3 and 4. The unit should be mounted on concrete and fastened to anchor bolts to prevent the unit from tipping. Units installed in areas that are exposed to ambient temperatures below freezing (32°F) should be installed on a snow/ice stand as defined by local codes.

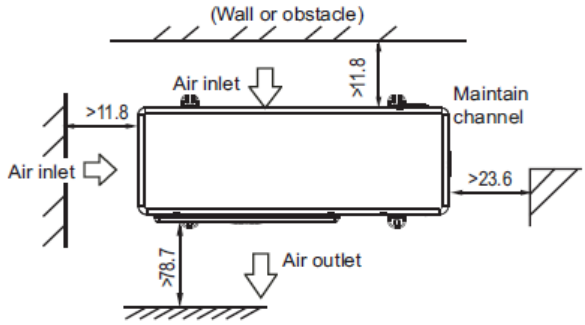

NOTE: All dimensions shown in inches.

Fig. 3 — Single Unit Installation

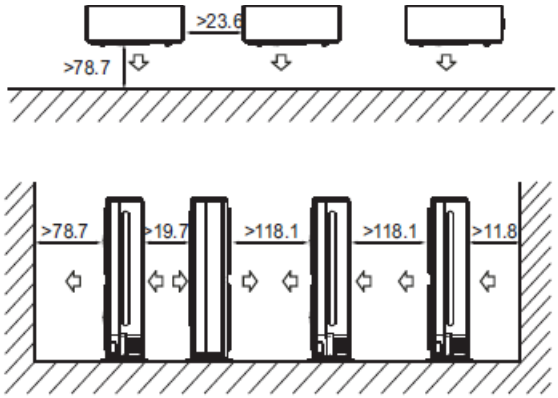

NOTE: All dimensions shown in inches.

Fig. 4 — Multiple or Parallel Unit Installation

HANDLING THE UNIT — To avoid overturning the unit, the angle of inclination should not be more than 15 degrees when carrying the unit.

LIFTING UNIT WITH CABLES — Make sure the lifting cables can withstand the weight of the unit. Use 2 cables. Make sure each cable is at least 26.3 feet long to avoid excess tension and force on the surfaces of the unit. To avoid damage while lifting the unit, do not remove the original packaging or unscrew from its original pallet. Connect lifting cables diagonally as shown in Fig. 5 below. Note the center of gravity in Fig. 5 below, which results from the weight of the compressor and other components located within the right-end section of the unit.

⚠DANGER

DO NOT stand below unit while it is suspended in the air. If unit were to fall, it may lead to personal injury or death.

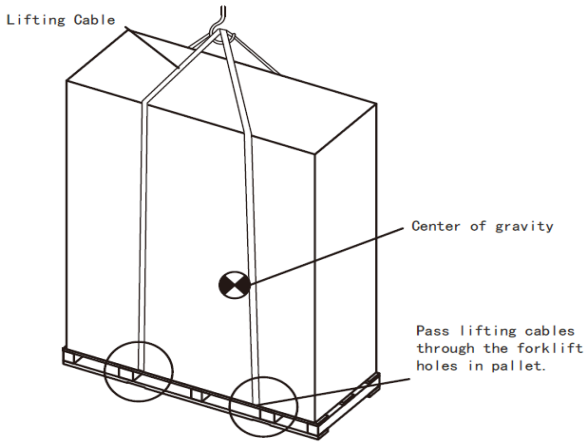

Fig. 5 — Lifting the Unit

CONCRETE BASE REQUIREMENTS

- The unit's base must be made of solid concrete.
- Ensure that the base is level and that the weight of the unit is distributed evenly. See Fig. 6 below for reference.

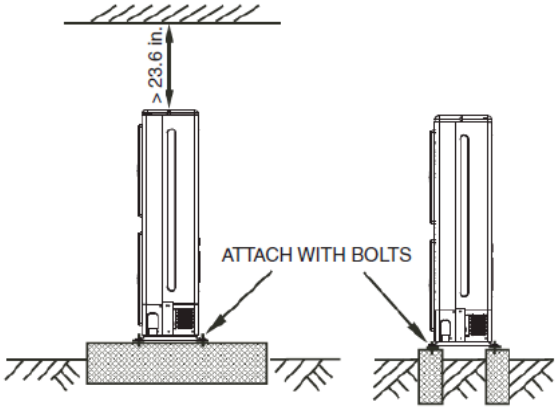

Fig. 6 —Concrete Base

- Create an outlet near the base for drainage. Refer to Fig. 7 below for main drain connection.

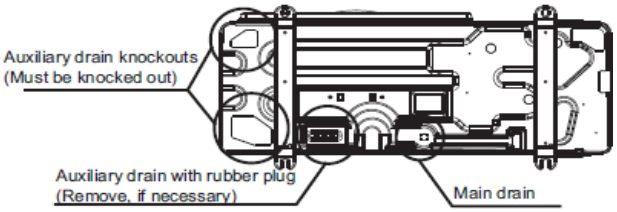

Fig. 7 —Drain Connections

- Ensure the roof can handle the unit weight if mounted on the roof.

Step 3 — Connect Refrigerant Piping and Wiring — Refrigerant pipe connections are made on the side of the unit. Remove the L-shaped metal plate, and route piping through the exposed opening. Route power and control wiring through the two separate, adjacent knockouts. See Fig. 8 for details.

INSULATION — Liquid lines and suction lines must be insulated separately. Closed-cell insulation with fire-retardant properties is recommended.

- For copper pipes less than $^1/_2$ inch. OD, recommended insulation thickness is $^1/_2$ inch.
- For copper pipes equal to or greater than $^5/_8$ inch. OD, the recommended insulation thickness is $^3/_4$ inch.

PIPING CONNECTIONS BETWEEN OUTDOOR AND INDOOR UNITS

⚠ CAUTION

During brazing, keep nitrogen in pipes to avoid oxidation inside the pipes. Use soapy water or refrigerant leak detector to verify every joint in the refrigeration piping.

Indoor units are connected to the outdoor units using branch piping. See Fig. 8 and 9. Table 3 lists main pipe sizes. Branch pipe sizing depends on the size of the indoor unit selected, see Table 4. Table 5 lists the maximum number of indoor units and connected capacity range per 38VMA outdoor unit.

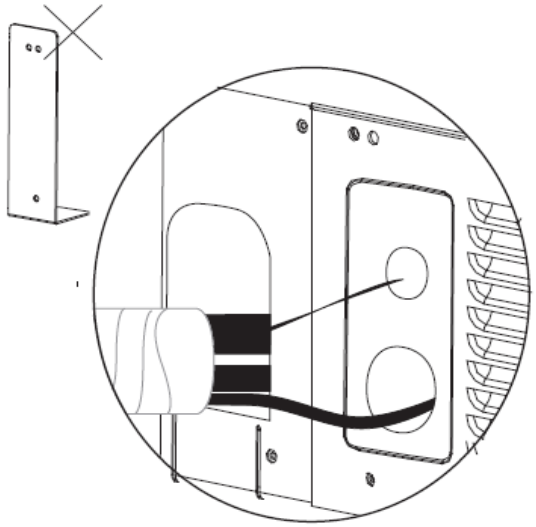

Fig. 8 — Piping and Control Wiring Connections

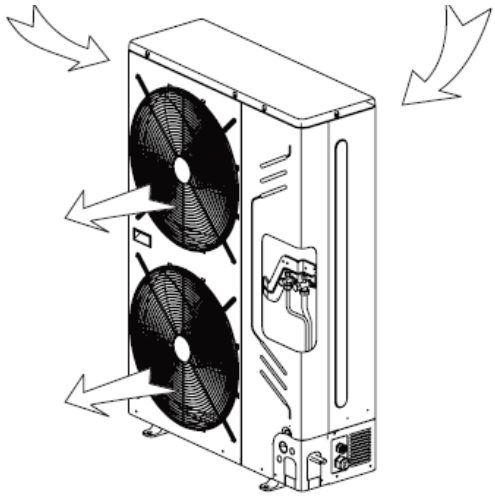

Fig. 9 — Piping and Control Wiring Locations

REFRIGERANT PIPING MEASUREMENTS

Table 3 — Main Pipe Sizing

38VMH UNIT	CAPACITY (tons)	MAIN PIPE SIZE	
		SUCTION SIDE (in.)	LIQUID SIDE (in.)
036	3	5/8	3/8
048	4		
060	5	3/4 *	

Table 4 — Branch Pipe Sizing

INDOOR UNIT SIZE (Btuh)	SUCTION SIDE (in.)	LIQUID SIDE (in.)
7,000 to 15,000	1/2	1/4
18,000 to 48,000	5/8	3/8

Table 5 — Maximum Indoor Unit Connections

38VMH UNIT	MAXIMUM NUMBER OF INDOOR UNITS	CONNECTED CAPACITY (%)
036	5	50 to 130
048	7	
060	9	

* Use pipe adapter (Components Shipped with Unit - Page 2) when main pipe diameter for suction line is 5/8 inch.

Figures 10 and and Tables 6 and 7 show allowable piping lengths and elevation differentials when connecting the outdoor units to indoor units.

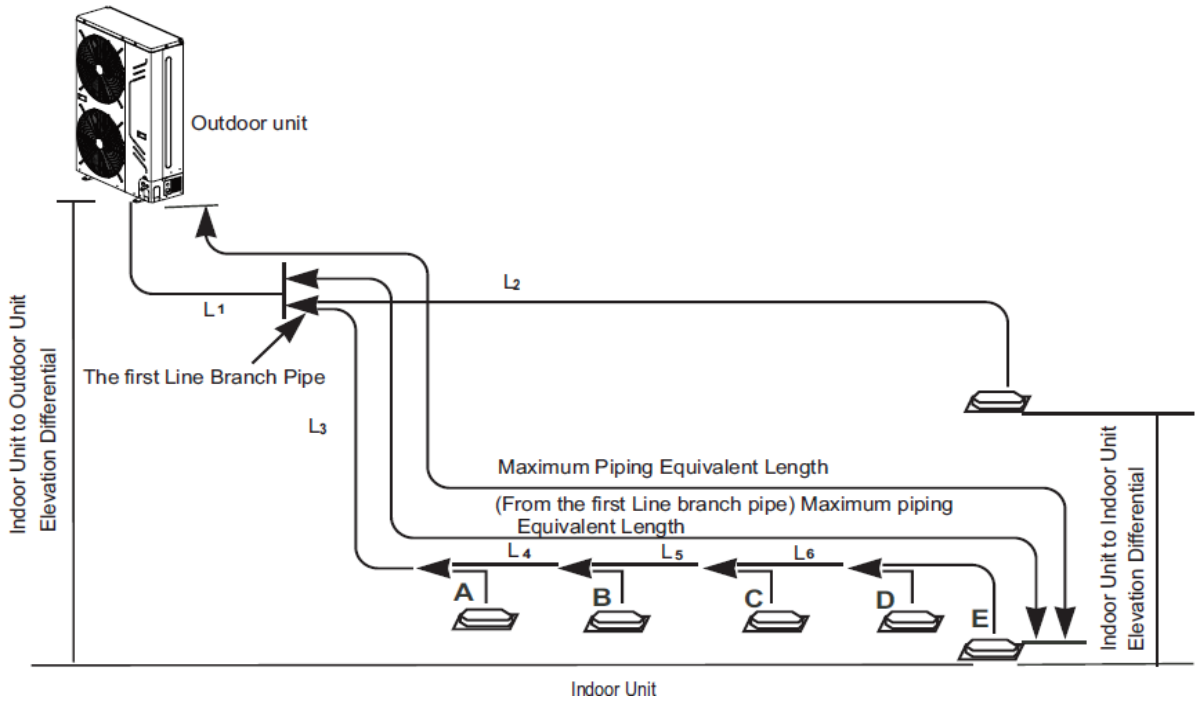

Fig. 10 — Piping Lengths and Drop Height

Table 6 — Permitted Pipe Lengths and Drop Heights

DESCRIPTION			ALLOWABLE VALUE (ft)	PIPES
Piping Length	Total Pipe Length		≤ 492	L1 + L2 + L3 + L4 + L5 + L6 + A + B + C + D + E
	Maximum Piping Length (L)	Actual Length	≤ 296	L1 + L3 + L4 + L5 + L6 + E
		Equivalent Length	≤ 328	
	First Branch to Farthest Indoor Unit		≤ 131	L3 + L4 + L5 + L6 + E
Height Difference	Indoor Unit to Outdoor Unit	Outdoor Unit Above	≤ 164	—
		Outdoor Unit Below	≤ 131	—
	Indoor Unit to Indoor Unit		≤ 49	—
	First Branch to Farthest Indoor Unit		≤ 49	—

NOTE: When the length "L1" is greater than 230 ft, the gas pipe should be increased from 5/8 in to 3/4 inch or from 3/4 in to 7/8 inch. The pipe adapter must be as close as possible to ODU.

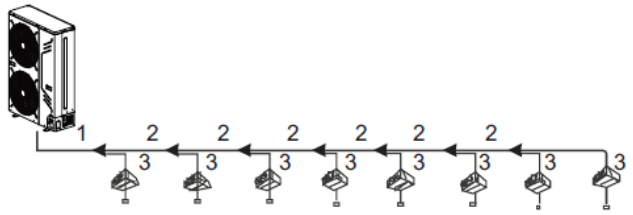

LEGEND

1 — Main outdoor pipe, from outdoor unit to first branch pipe.

2 — Main indoor pipe, from branch pipe to first branch pipe.

3 — Branch pipe, from branch pipe to indoor unit.

◀ — Branch joint.

NOTE: If brazing is required, nitrogen purge is required during the process.

Fig. 11 —Branch Joint Layout

Table 7 — Connection Method

UNIT TYPE	SUCTION SIDE	LIQUID SIDE
Outdoor Unit	Flaring	Flaring
Indoor Unit	Flaring	Flaring
Branch Pipe	Brazing or Flaring	Brazing or Flaring

BRANCH JOINT INSTALLATION — The branch joint must be installed parallel to the ground; the angle of the joint should not be greater than 10 degrees. Positioning the branch joint more than 10 degrees from parallel can cause malfunctions. See Fig. 12 for correct positioning of the joint.

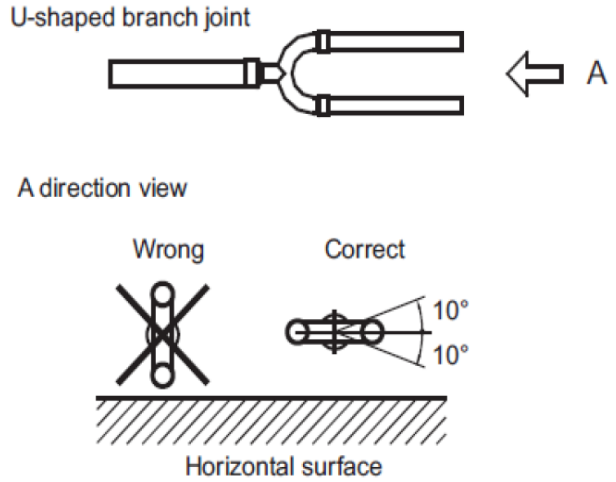

Fig. 12 —Correct Branch Joint Positioning

Install the branch joints properly to avoid oil accumulating in the system.

Table 8 — Branch Joint

TOTAL CAPACITY CODE OF INDOOR UNIT AT DOWNSTREAM SIDE (kBtu/h)	BRANCH JOINT
Below 78	40VM900031

Table 9 — 4 Port Branch Header

TOTAL CAPACITY CODE OF INDOOR UNIT AT DOWNSTREAM SIDE (kBtu/h)	BRANCH HEADER
Below 78	40VM900025

NOTE: Maximum capacity for each port is 24k.

Table 10 — Branch Joint

PART NUMBER	LOW-PRESSURE GAS SIDE JOINT (IN.)	LIQUID SIDE JOINTS (IN.)	HEAT INSULATION MATERIAL
40VM900031	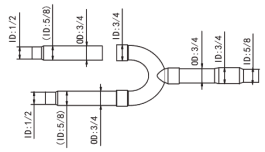	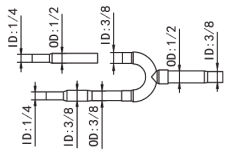	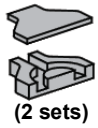 (2 sets)

Table 11 — 4 Port Branch Header

Part Number	Low Pressure Gas Side Joint	Liquid Side Joint
40VM900025	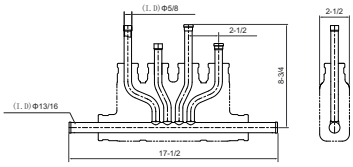	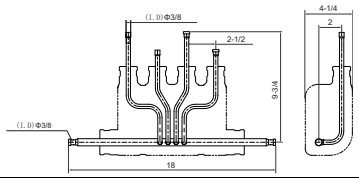

Step 4 — Pressure and Vacuum Test

System — After completing the refrigerant piping, perform the following pressure test:

1. Connect nitrogen canister to the system through the high-pressure gas side valve from the meter connector.
2. Apply nitrogen pressure gradually to 500 psig.
3. If rapid pressure decrease is apparent; locate and repair the leak, and pressurize the system again.
4. Repeat Steps 1-3 until the system remains at 500 psig for 24 hours.

After completing the pressure test, perform the following vacuum test:

1. Relieve the system of the nitrogen gas.
2. Connect a vacuum pump capable of at least 85 cfm to the system.
3. Vacuum the system to 500 microns or lower, and check for rapid pressure change.
4. Repeat Steps 1-3 until the system remains at 500 microns or lower for one hour.

When finished, replace the vacuum pump with the R-410A refrigeration canister.

Step 5 — Adjust Refrigerant Charge —

Calculate the amount of refrigerant (R-410A) to add using Table 12 and Fig. 13.

Table 12 — Refrigerant to Add Using Liquid Pipe Size

PIPE SIZE ON LIQUID SIDE (in.)	REFRIGERANT TO BE ADDED PER FOOT (lb/ft)
1/4	0.015
3/8	0.040
1/2	0.080
5/8	0.120
3/4	0.181
7/8	0.255

R*= [Total length (ft) of liquid piping Size at Φ 7/8 in.] x 0.225 + (lb/ft) [Total length (ft) of liquid piping Size at Φ 3/4 in.] x 0.181 + (lb/ft) [Total length (ft) of liquid piping Size at Φ 5/8 in.] x 0.120 + (lb/ft)

[Total length (ft) of liquid piping Size at Φ 1/2 in.] x 0.080 + (lb/ft) [Total length (ft) of liquid piping Size at Φ 3/8 in.] x 0.040 + (lb/ft) [Total length (ft) of liquid piping Size at Φ 1/4 in.] x 0.015 + (lb/ft)

IDU Model	Charged amount per unit (lbs.)
40VMF012~036A--3	1.10
40VMM012~036A--3	1.10
Others	0

+

Y-joints or headers number in liquid side
x 0.22 (lbs/item)

* R = Amount of refrigerant to add.

Fig. 13 —Calculating the Amount of Refrigerant to Add

EXAMPLE OF PROPER CALCULATION —

Example

100' of 1/2" = (100*.080) =8
75' of 3/8" = (75*.040) = 3
50' of 1/4" = (50*.015) = .75
Total Piping Charge - 8+3+.75=11.75

IDU type

3- 40VMF012-36A-3 = (3*1.10)=3.3

Number of Y-joints / headers

1- y joint = (1*.22)=.22
2-Headers = (2*.22)= .44
Total = .66

11.75+3.3+.66 = 15.71 lbs additional charge

All service valves on the outdoor units should remain fully closed.

R-410A refrigerant should be added (in liquid state) at the liquid line service port on the header unit.

If the total calculated amount of refrigerant can be added to the system, the charging process is finished.

If the total calculated amount of refrigerant cannot be added to the system, close the valve on the refrigerant bottle, move the charging house from the liquid line service port to the suction line service port.

Open the suction and liquid service valves on the header unit and start the system in cooling mode.

Slowly open the valve on the refrigerant bottle and carefully release liquid refrigerant into the suction service port.

If the total calculated charge amount is added completely to the system, the charging process is finished.

Step 6 — Complete Electrical Connections —

See Fig. 14 for a diagram of the unit's internal power and control wiring.

⚠ WARNING

Electrical shock can cause personal injury and death. Disconnect power supply before making wiring connections. There may be more than one disconnect switch. Tag all disconnect locations to alert others not to restore power until work is completed.

⚠ WARNING

All units must be wired strictly in accordance with the wiring diagram furnished with the unit. Any wiring different from the wiring diagram could result in personal injury and property damage.

⚠ CAUTION

Any original factory wiring that requires replacement must be replaced with wiring material having a temperature rating of at least 105°C.

Ensure supply voltage to the unit, as indicated on the serial plate, is not more than 10% over the rated voltage or 10% under the rated voltage.

Failure to follow these recommendations may result in equipment damage.

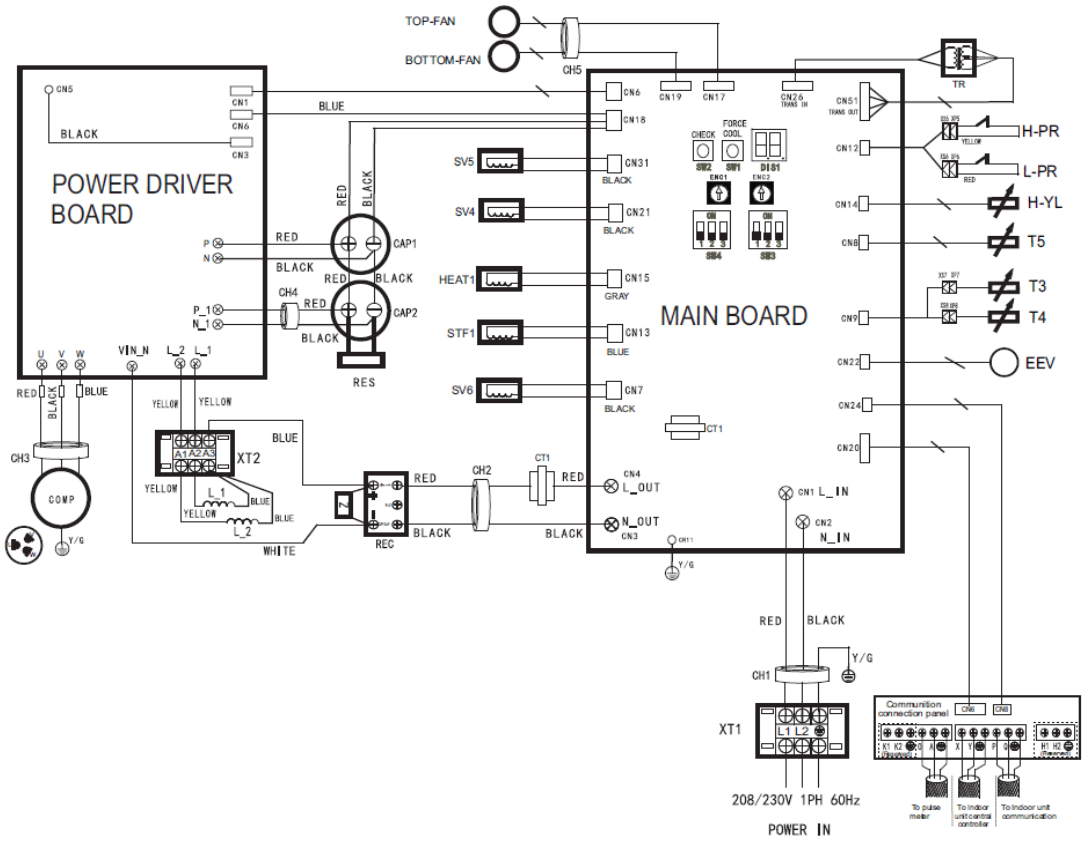

Fig. 14 —Typical Wiring Diagram

POWER SUPPLY — Electrical characteristics of the available power supply must agree with the unit nameplate rating. Circuit breaker size and supply voltage must be as shown in Table 13.

⚠ CAUTION

Operating the unit on improper supply voltage or with excessive phase imbalance may result in equipment damage and can affect the manufacturer's warranty.

Table 13 — 38VMH Electrical Data

SUPPLY VOLTAGE POWER SUPPLY (V-Ph-Hz)	38VMH UNIT SIZE	POWER SUPPLY	
		MCA*	MOPD
208/230-1-60	036	36	40
	048	38	40
	060	40	45

LEGEND
MCA — Minimum Circuit Amps
MOPD — Maximum Overcurrent Protective Device

* Select wire size based on larger value of MCA.

POWER WIRING — Installation of wiring must conform with local codes and with NEC ANSI/NFPA 70, current edition. Units must be electrically grounded in conformance with the code. In Canada, wiring must comply with CSA C22.1, Electrical Code.

General Wiring Notes

- Separate power sources are required for indoor and outdoor units.
- Control circuit does NOT require separate power source.
- Power entry is on the right side of the unit when facing the fan grille or front of the unit.
- Terminals for field power supply are suitable for copper conductors.
- See Fig. 15 and 16 for power wiring.

Main Power — Bring wires from the disconnect switch through the knockout hole at the bottom right corner of the unit to the control box.

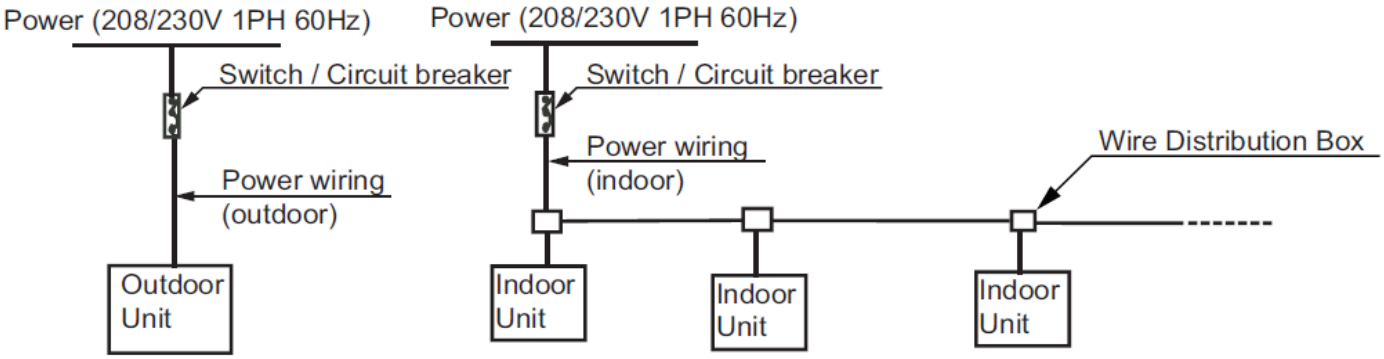

Fig. 15 — Power Wiring

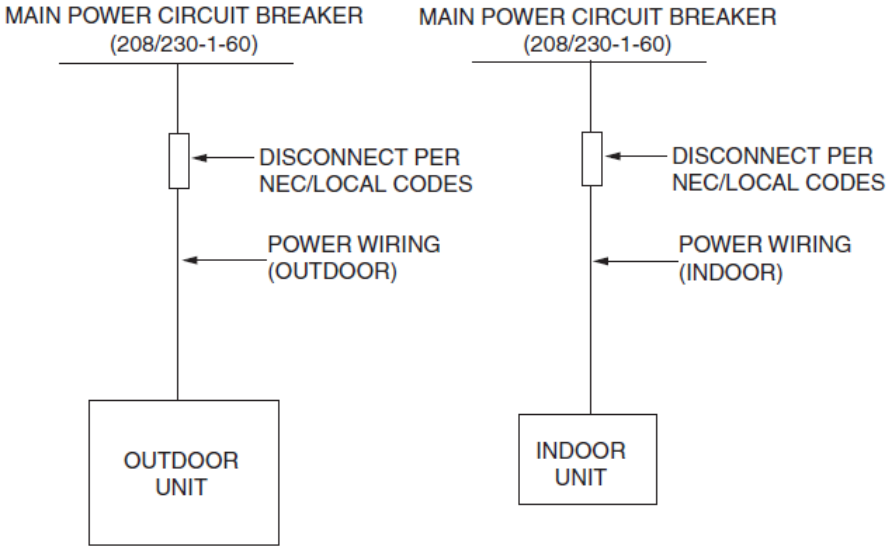

Fig. 16 — Individual Power Wiring

WIRING THE COMMUNICATION TERMINAL BLOCK — Figure 17 is the communication port diagram for the outdoor unit.

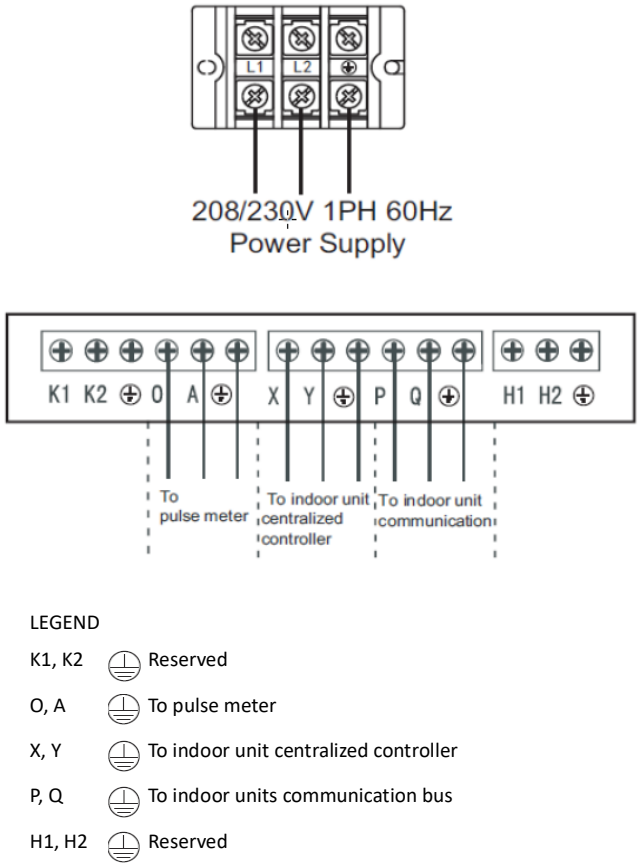

Fig. 17 —Outdoor Unit Communication Port Diagram

COMMUNICATION CABLE — The type of communication cable used is a 2-core stranded shielded cable. The diameter of the wire should be AWG 18. The maximum wire length should be less than or equal to 3,937 feet between outdoor and indoor units and less than or equal to 820 feet between the wired controller and indoor units. Communication wires are sold separately but can be obtained through Carrier. Figure 18 below shows a typical communication wire from Carrier.

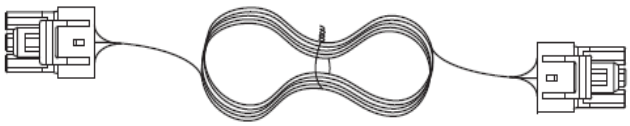

Fig. 18 —Typical Communication Wire

CONTROL CONNECTIONS — Control power comes from the control board in the outdoor unit and does NOT require a separate source.

Use of 2-core stranded shielded cable is required. Shield is used to protect the signal from interference. The control wire between outdoor and indoor units is bus type. See Fig. 19 for communication wiring.

COMMUNICATION WIRING — Communication wire must be wired as shown in Fig. 8 and 19. Do not route communication wire with high voltage power wire or allow it to come in contact with non-insulated piping and sharp edges.

> IMPORTANT: Wiring for communication shall be 2 inches. or more apart from power source wiring to avoid electric noise. Do not insert control/communication and power source wire in the same conduit.
>
> Pay attention to the polarity of communication wire.

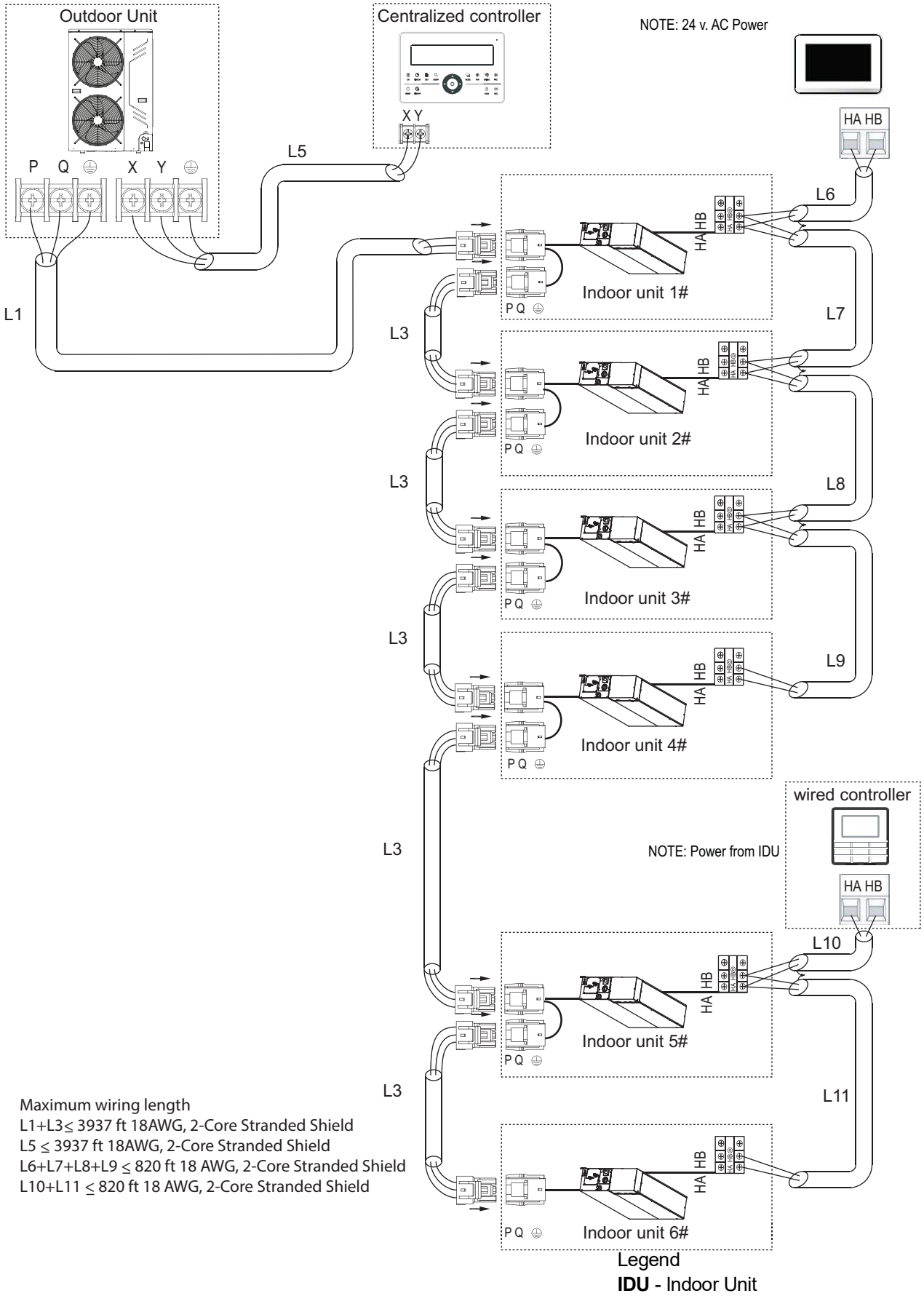

Fig. 19 — Connecting Communication Wire to Outdoor Unit Communication Terminal

OPTION/EXTENSIONS OF COMMUNICATION WIRING — To extend control wiring or make terminal connections, use the PQE connection wire supplied in the accessory kit and follow the steps below.

1. Cut connector on outdoor unit side as shown in Fig 20.

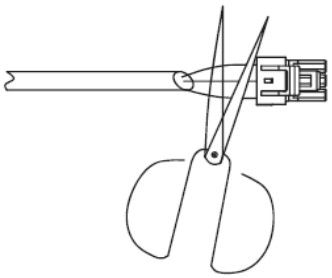

Fig. 20 —Shearing Outdoor Connector

2. Strip a suitable length of the insulation layer as shown in Fig. 21.

Fig. 21 —Stripping the Wire

3. Use a suitable screwdriver to fix the communication wire on the outdoor unit communication terminal as shown in Fig. 22.

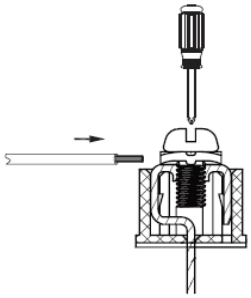

Fig. 22 —Connecting Communication Wire to Outdoor Unit Communication Terminal

If communication wires are used to connect between indoor units, find the corresponding port and plug it directly as shown in Fig. 23.

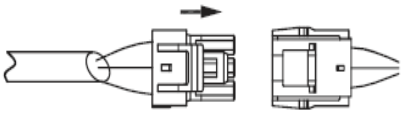

Fig. 23 —Connecting the Communication Wires

⚠ CAUTION

NEVER CONNECT the main power source to the control or communication terminal block.

USE AN APPROPRIATE SCREWDRIVER for tightening the terminal screws. Do not over tighten the terminal screws.

Failure to follow these procedures may result in personal injury or damage to equipment.

START-UP

Trial Run — Set a different address for each indoor unit. Addresses can range from 0 to 63. Address can be set randomly using "Automatic Search Address" function, or set addresses manually using wireless remote or wired controller.

Select and assign an indoor unit as 63. This unit will be in "priority mode" and will control whether the system is in heating or cooling.

Error Codes — Error codes are shown on the LED display on the main control board. Press the CHECK button on the main control board to scroll sequentially through error codes. Refer to Fig. 14 for LED display location (DIS1), and CHECK button location. Refer to Table 14 for an explanation of error codes.

Table 14 — List of Error Codes

ERROR CODE	EXPLANATION
E2	Communication error between indoor unit and outdoor unit
E4	T3 or T4 temperature sensor error
E5	Power voltage protection
E6	DC Fan error
E7	Discharge temperature sensor error
E9	EEPROM error
E.9.	Mismatched main chip with EEPROM
EA	DC Fan error more than 5 minutes in heating mode
Eb	E6 error more than 2 times in 10 minutes
P1	High pressure protection
P2	Low pressure protection
P3	Input current overload
P4	Discharge temperature (T5) protection
P5	Condenser temperature (T3) protection
P8	Fan speed exceeds setpoint for 5 seconds or more.
PE	High indoor coil temperature
PP	Liquid slugging protection; indoor evaporator superheat too low
F1	DC bus voltage is too low for 5 seconds
H0	Communication error between power driver board and main board
H4	L0 or L1 error more than 3 times in 60 minutes
L0	Fault in compressor module
L1	DC bus under-voltage protection
L2	DC bus over-voltage protection
L4	Compressor MCE error
L5	Low compressor speed (Reserved)
L7	Compressor wrong phase protection (Reserved)
L8	Compressor speed difference is one second more than 15 rps
L9	Compressor speed difference between setting speed and running speed more than 15 rps

LEGEND

EEPROM — Electrically Erasable Programmable Read-Only Memory

MCE — Motion Control Engine

Unit Settings

Table 15: SW3 and SW4 Function Definition (Black box shows switch position)

SW3 Function Definition		SW4 Function Definition	
	Heating priority mode		Automatic addressing
	Cooling priority mode		Non-automatic addressing (factory default)
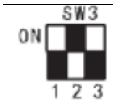	First running priority mode		Clear IDU address
	Heating mode only		Fahrenheit temperature (factory default)
	Cooling mode only		Celsius temperature

Table 16: ENC1 and ENC2

ENC1 Function Definition (factory use only)		ENC2 Function Definition	
	For factory use only		ODU network address dial-up Only 0-7 used

Pre-Start Check

- Check that the refrigerant pipe line and communication wire with indoor and outdoor units have been connected to the same refrigeration system.
- Outdoor units require 208/230-1-60 power. Verify that the power and phase requirements are correct and both legs are present.
- Check that the power source's voltage is within 10% of the rated voltage.
- Check and confirm that the power and control wire are correctly connected.
- Check that the wired controllers are properly connected.
- Before powering on, confirm there is no short circuit for each line.
- Check that all units have passed a nitrogen pressure test for 24 hours.
- Provide the customer accurate "as-built" drawings and documents, including actual piping lengths and locations, unit addresses, settings, etc.
- Ensure additional refrigerant charge calculations are correct and that the system is charged accordingly.
- Energize outdoor units for at least 24 hours before system start-up to ensure proper oil temperature has been achieved.
- Ensure all refrigerant valves on outdoor units are fully open. If these valves are not fully open, equipment damage may occur.

MAINTENANCE

⚠ CAUTION

When servicing or repairing this unit, use only factory-approved service replacement parts. Refer to the rating plate on the unit for complete unit model number, serial number, and company address. Any substitution of parts or controls not approved by the factory will be at the owner's risk and may result in equipment damage.

⚠ CAUTION

To avoid equipment damage, do not attempt to reuse any mechanical or electrical controllers that have been wet. Replace defective controller.

The following are recommended guidelines. Jobsite conditions may say that maintenance schedule be performed more often than recommended here.

EVERY 3 MONTHS:

- Check coil condition. Clean the coil if necessary.

EVERY 6 MONTHS — Follow the 3-month maintenance schedule. In addition:

- Check for and remove debris that may have settled around the base of the outdoor unit.
- Check for proper condensate drainage (clear basepan).
- Eliminate any standing water inside the outdoor unit.

EVERY 12 MONTHS — Follow the 6-month maintenance schedule. In addition:

- Be sure all electrical connections are secure.
- Check heating and cooling action to confirm proper operation.

© Carrier Corporation 2020