VRF Indoor Unit
45VML007---3—Low Static Duct

Submittal Data

Job Name _____ Location _____
Tag _____

STANDARD FEATURES

- Rear Return Air Opening is Standard and Bottom Return is Optional
- Three Fan Speeds - High, Medium, and Low
- Knockout for Outside Air
- Built-in Drain Pump from Factory
- Built in EEV (Electronic Expansion Valve) for Installation Ease
- Internally Installed A2L Refrigerant Leak Sensor

INDOOR UNIT MODEL		45VML007---3
PERFORMANCE		
Cooling Rated Capacity	Btu/h	7,000
Heating Rated Capacity	Btu/h	8,000
Airflow (H / M / L)	CFM	325 / 250 / 175
Sound Pressure (H / M / L)	dBA	32 / 27.5 / 25
ELECTRICAL		
Power Supply	V/Ph/Hz	208-230/1/60
Fan Motor Rated Motor (Output)	W	20
Minimum Circuit Amps (MCA)	A	1.13
Maximum Overcurrent Protection	A	15.0
Motor Type		DC

PHYSICAL DATA		
Pipe Connection Size - Liquid	in.	1/4
Pipe Connection Size - Suction	in.	1/2
Pipe Connection Size - Drain	in.	1
External Static Pressure (ESP)	in. wg	0.04(0-0.2)
Refrigerant		R-454B
Unit Width	in.	21-5/8
Unit Height	in.	7-7/8
Unit Depth	in.	18-7/8
Net Unit Weight	lb	27.6

ACCESSORIES

☐ Wireless Remote Controller 45VM900001
☐ Wired Remote Controller - Non-Prog. 45VM900002

© 2025 Carrier. All rights reserved.
Edition Date: 03/25
Form No: 45VML007--3-1SD
Printed in U.S.A.
Replaces: New

Manufacturer reserves the right to discontinue, or change at any time, specifications or designs without notice and without incurring obligations.

DIMENSIONAL DRAWING
INDOOR UNIT LOW STATIC DUCT 45VML007---3

External dimension, air outlet size, and size of fresh air outlet:

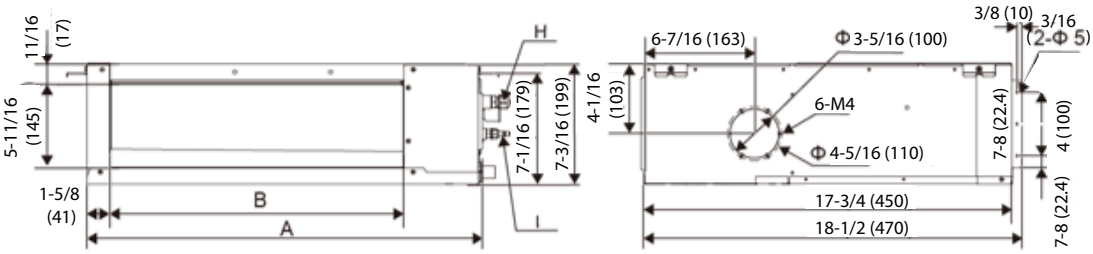

Size of return air inlet (back return air mode):

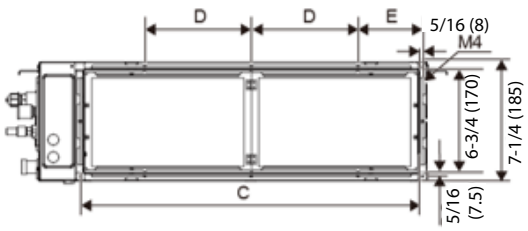

Dimension of pipe and water pipe:

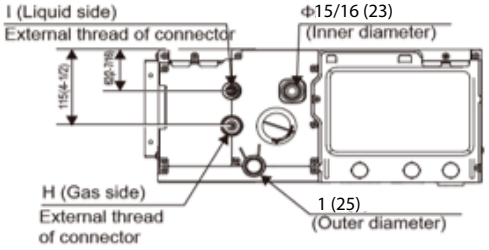

Size of return air inlet (bottom return air mode), and the distance between the lugs:

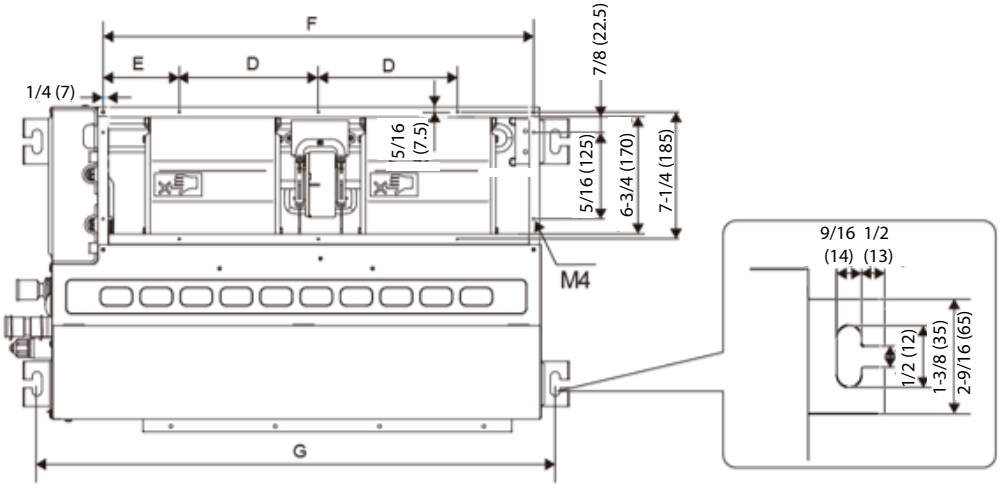

Capacity (kBTU/h	A	B	C	D	E	F	G	H	I
07	27-9/16 (700)	20-7/8 (530)	23-3/4 (605)	8-7/8 (200)	4-5/16 (109.5)	24-3/8 (619)	29-5/16 (745)	3/4-16 UNF	7/16-20 UNF

Note: All dimensions are shown in inches

© 2025 Carrier. All rights reserved.

Edition Date: 03/25
Form No: 45VML007---3-1SD
Printed in U.S.A.
Replaces: New

Manufacturer reserves the right to discontinue, or change at any time, specifications or designs without notice and without incurring obligations.