Installation and Maintenance Instructions

CONTENTS

Page
SAFETY CONSIDERATIONS 1
GENERAL 2
DIMENSIONS 4
FAN CURVE CHARACTERISTICS 6
INSTALLATION 8
Step 1 — Unpack and Inspect Units 8
Step 2 — Position the Unit 9
Step 3 — Mount the Units 9
Step 4 — Connect Piping 10
Step 5 — Complete the Electrical Connections . 11
Step 6 — Installing the LED Display Panel 14
Step 7 — Position and Connect Controller 14
ACB INTERFACE 18
START-UP 18
MAINTENANCE 18
Fan Assembly Maintenance 18
TROUBLESHOOTING 23
APPENDIX A - DIP SWITCH SETTINGS 25

SAFETY CONSIDERATIONS

Improper installation, adjustment, alteration, service, maintenance, or use can cause explosion, fire, electrical shock, or other conditions that may cause death, personal injury, or property damage. The qualified installer or agency must use factory-authorized kits or accessories when modifying this product.

Follow all safety codes. Wear safety glasses, protective clothing, and work gloves. Use quenching cloth for brazing operations. Have fire extinguisher available. Read these instructions thoroughly and follow all warnings or cautions included in literature and attached to the unit. Consult local building codes and the current editions of the National Electrical Code (NEC) ANSI/NFPA (American National Standards Institute/National Fire Protection Association) 70. In Canada, refer to the current editions of the Canadian Electrical Code CSA (Canadian Standards Association) C22.1.

Understand the signal words — **DANGER**, **WARNING**, and **CAUTION**. **DANGER** identifies the most serious hazards, which will result in severe personal injury or death. **WARNING** signifies hazards that could result in personal injury or death. **CAUTION** is used to identify unsafe practices, which would result in minor personal injury or product and property damage.

Recognize safety information. This is the safety-alert symbol (⚠). When this symbol is displayed on the unit and in instructions or manuals, be alert to the potential for personal injury.

⚠ WARNING

Electrical shock can cause personal injury and death. Shut off all power to this equipment during installation. There may be more than one disconnect switch. Tag all disconnect locations to alert others not to restore power until the work is completed.

⚠ WARNING

DO NOT re-use compressor oil or any oil that has been exposed to the atmosphere. Dispose of oil per local codes and regulations. DO NOT leave the refrigerant system open to air any longer than the actual time required to service the equipment. Seal circuits being serviced and charge with dry nitrogen to prevent oil contamination when timely repairs cannot be completed.

Failure to follow these procedures may result in damage to equipment. For information about replacement oil type and viscosity, see the Installation, Start-Up, and Service Instructions for the 38VMAH and 38VMAR outdoor units.

⚠ WARNING

DO NOT USE TORCH to remove any component. System contains oil and refrigerant under pressure.

To remove a component, wear protective gloves and goggles and proceed as follows:

A. Shut off electrical power to unit.
B. Recover refrigerant to relieve all pressure from system using both the high-pressure and low pressure ports.
C. Traces of vapor should be displaced with nitrogen and the work area should be well ventilated. Refrigerant in contact with an open flame produces toxic gases.
D. Cut the component connection tubing with a tubing cutter and remove the component from unit. Use a pan to catch any oil that may come out of the lines and as a gage for how much oil to add to the system.
E. Carefully unsweat remaining tubing stubs when necessary. Oil can ignite when exposed to torch flame.

Failure to follow procedures may result in personal injury or even death.

⚠ WARNING

When installing the equipment in a small space, provide adequate measures to avoid refrigerant concentration exceeding safety limits due to refrigerant leak.

In case of refrigerant leak during installation, ventilate the space immediately. Failure to follow this procedure may lead to personal injury.

Manufacturer reserves the right to discontinue, or change at any time, specifications or designs without notice and without incurring obligations.

GENERAL

The 40VMA outside air fan coil unit offers simple operation and long service with proper installation, operation, and regular maintenance. The equipment is initially protected under the manufacturer's standard warranty; however, the warranty is provided under the condition that the steps outlined in this manual be followed in detail. This includes initial inspection, proper installation, regular periodic maintenance, and everyday operation of the unit.

This manual should be fully reviewed in advance before initial installation, start-up, and any maintenance. Contact your local sales representative or the factory with any questions BEFORE proceeding.

See Fig. 1 for the model number nomenclature. Table 1 shows components that may or may not be used for a particular installation. Table 2 lists physical data for each unit size. Figures 2, 3, and 4 show the unit's dimensions.

Fig. 4 – Fig. 8 shows fan performance curves.

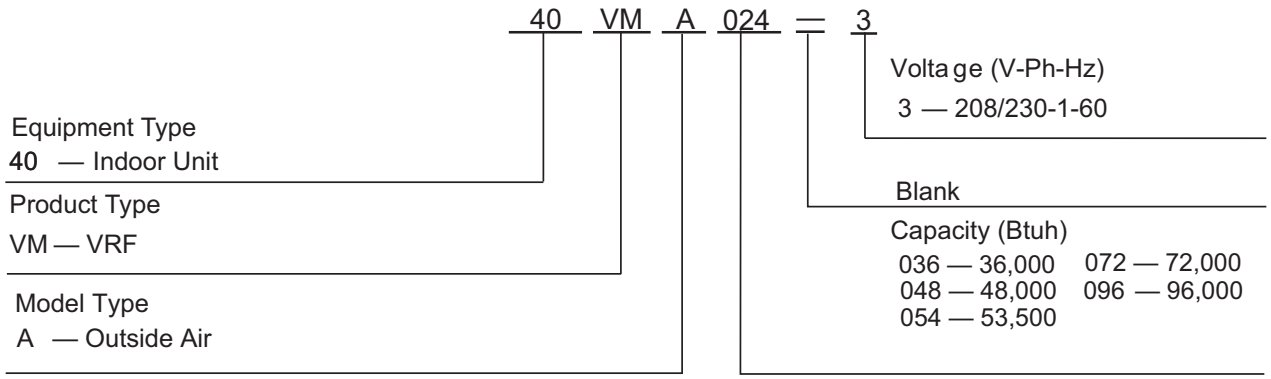

LEGEND
VRF — Variable refrigerant Flow

Fig. 1 —Model Number Nomenclature

Table 1 —Components Shipped with Unit

NAME	OUTLINE	QUANTITY	FUNCTION
PQ connection wire		2	Connect outdoor unit, indoor unit and sub MDC
Pipe insulation material	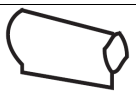	2	Heat insulation
Condensate connection	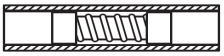	1 (036 -054)	For drainage
Clamp		1 (036-054)	Connect the drain hose to the condensate connection
Adhesive tape for seal		1 (072 - 096	Connect the drain hose to condensate connection
Condensate connection	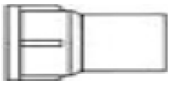	1 (072 - 096)	For drainage
Copper nut		1	Use for pipe connection
Copper pipes	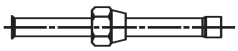	2 (036 - 054) 1 (072 - 096)	Use for inlet and outlet connection
Connecting wire	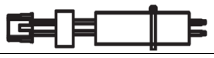	1	For occupancy sensor
Led Display Panel		1	Operation and error display

LEGEND
MDC — Multi-port Distribution Controller

Table 2 —40VMA Physical Data

UNIT 40VMA	036	048	054	072	096
POWER SUPPLY (V-Ph-Hz)	208/230-1-60				
COOLING CAPACITY (Btuh)	36,000	48,000	53,500	72,000	96,000
HEATING CAPACITY (Btuh)	24,000	30,000	36,000	47,000	59,000
INDOOR FAN MOTOR					
Type	DC				
Input (W)	64	71	87	60*2	80*2
INDOOR COIL					
Number of Rows	4				
Fin Spacing (fins/in.)	16			15	
Fin Type	Hydrophilic Aluminum				
Tube Diameter, OD (in.)	3/8				
Tube Type	Inner Groove				
Number of Circuits	7			20	
INDOOR AIRFLOW (cfm)					
Low	441	471	529	882	1029
Medium	529	559	647	971	1176
High	588	647	765	1059	1294
INDOOR EXTERNAL STATIC PRESSURE (HIGH), in wg	0.8			1.0	
INDOOR NOISE LEVEL (dBA)					
Low	43.8	43.4	43.9	48.5	47.7
Medium	47.8	47.8	47.8	50.0	50.8
High	49.5	50.4	51.4	52.1	53.5
UNIT					
Unit Dimensions W x H x D (in.)	$51\text{-}^{3}/_{16}$ x $16\text{-}^{1}/_{2}$ x $27\text{-}^{3}/_{16}$			$56\text{-}^{11}/_{16}$ x 20 x $36\text{-}^{3}/_{8}$	
Packing Dimensions W x H x D (in.)	$56\text{-}^{1}/_{2}$ x 22 x $30\text{-}^{1}/_{4}$			$59\text{-}^{3}/_{8}$ x 26 x 39	
Net/Gross Weight (lb)	161.4/233.7			255.7/346.2	
REFRIGERANT TYPE	R410A				
EXPANSION DEVICE	EEV				
DESIGN PRESSURE, H/L (psig)	580/320				
REFRIGERANT PIPING (in.)					
Liquid Side, OD	$^{3}/_{8}$				
Suction Side, OD	$^{5}/_{8}$			$^{7}/_{8}$	
CONNECTING WIRING					
Power Wiring	Sized per NEC and Local Codes Based on Nameplate Electrical Data				
Signal Wiring	2-core stranded shielded cable 18 AWG				
DRAINAGE WATER PIPE DIAMETER, OD (in.)	1			$1\text{-}^{5}/_{8}$	
Condensate Pumps	Factory-installed condensate pump (maximum lift of 27.5 in.)			None	

LEGEND
EEV — Electronic Expansion Valve
NEC — National Electrical Code
AWG — American Wire Gage

DIMENSIONS

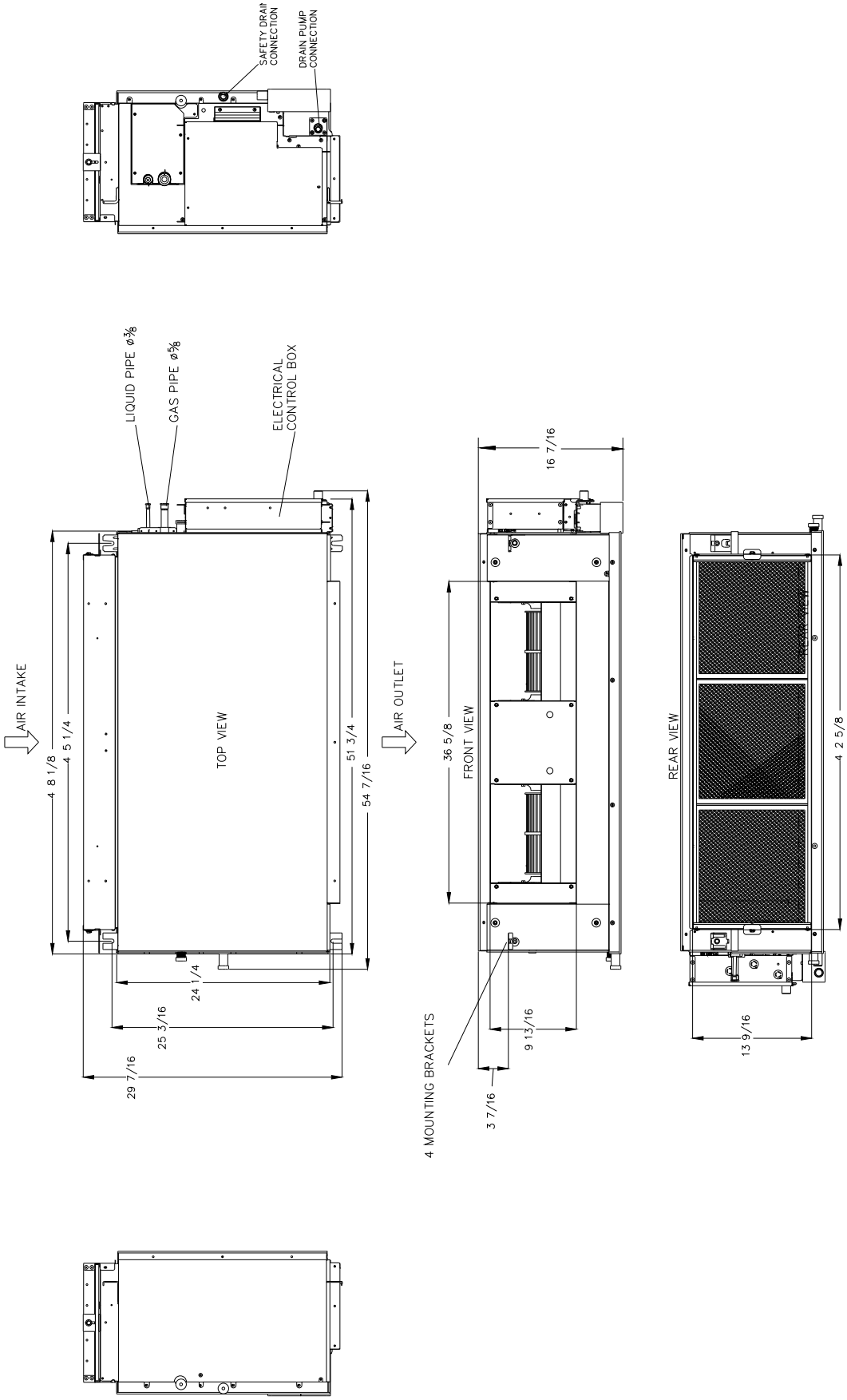

Fig. 2 —40VMA036-054 Dimensions

NOTE: All dimensions are shown in inches.

DIMENSIONS (CONT.)

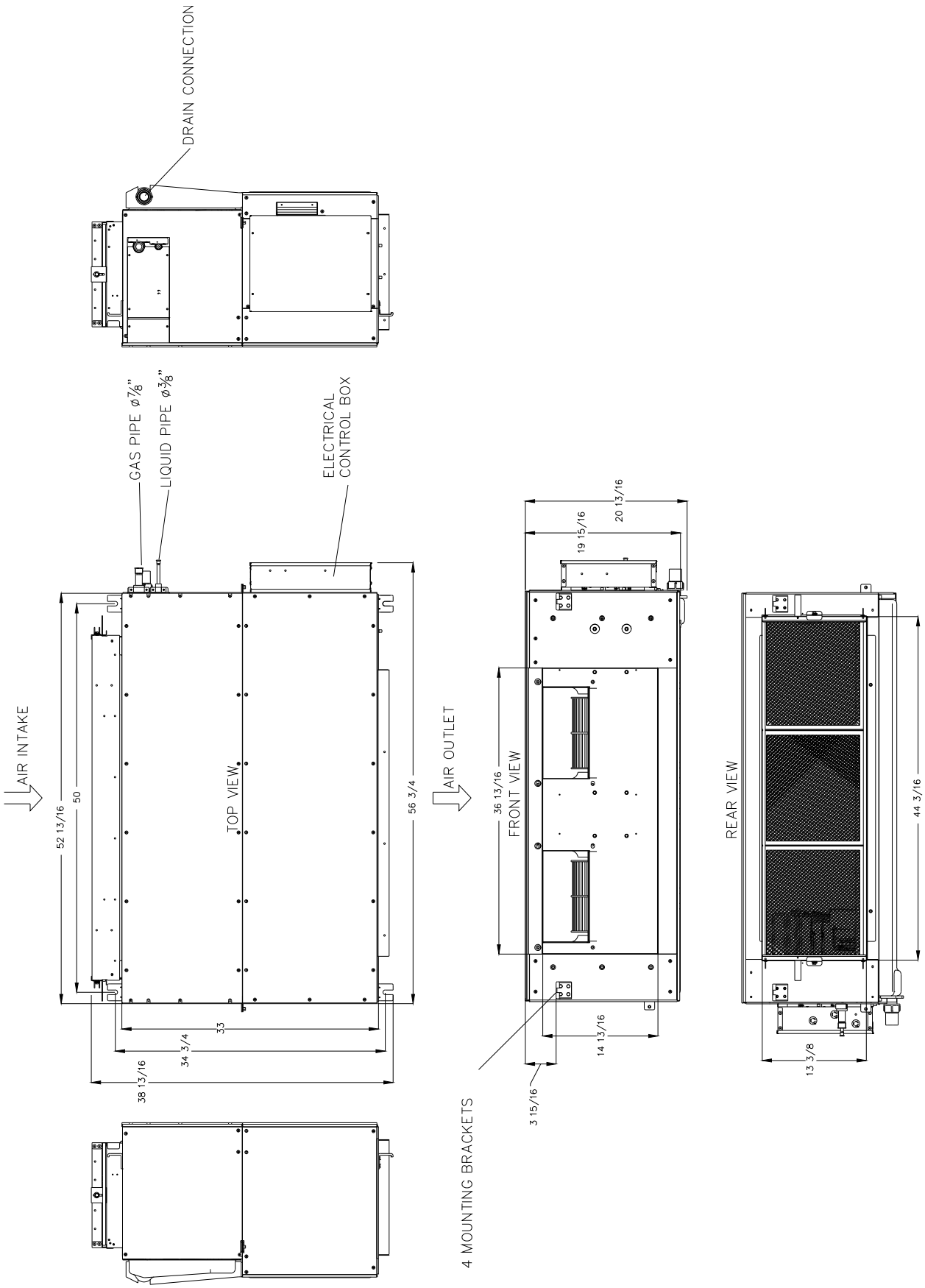

Fig. 3 —40VMA072-096 Dimensions

NOTE: All dimensions are shown in inches.

FAN CURVE CHARACTERISTICS

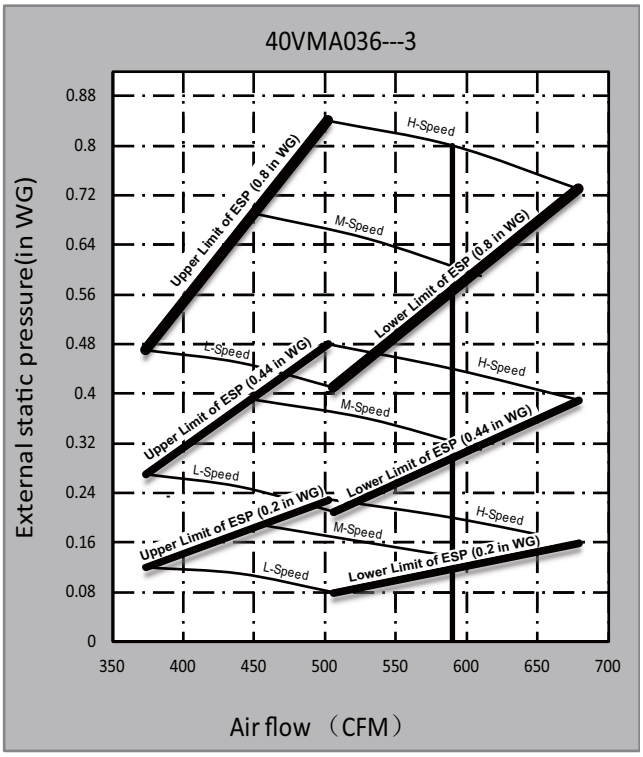

Fig. 4 —Size 036

ESP	Fan Speed	Range of Available Airflow Rate in H-Speed					
		Max Point		Rating Point		Min Point	
		Max CFM	SP (in.)	Mid CFM	SP (in.)	Min CFM	SP (in.)
0.20	H	676	0.16	588	0.20	500	0.23
0.24			0.20		0.24		0.27
0.28			0.24		0.28		0.31
0.32			0.28		0.32		0.35
0.36			0.32		0.36		0.39
0.40			0.36		0.40		0.43
0.44			0.39		0.44		0.48
0.48			0.43		0.48		0.52
0.52			0.47		0.52		0.56
0.56			0.50		0.56		0.60
0.60			0.54		0.60		0.64
0.64			0.57		0.64		0.68
0.68			0.61		0.68		0.72
0.72			0.65		0.72		0.76
0.76			0.69		0.76		0.80
0.80			0.73		0.80		0.84

LEGEND
ESP — External Static Pressure
SP — Static Pressure

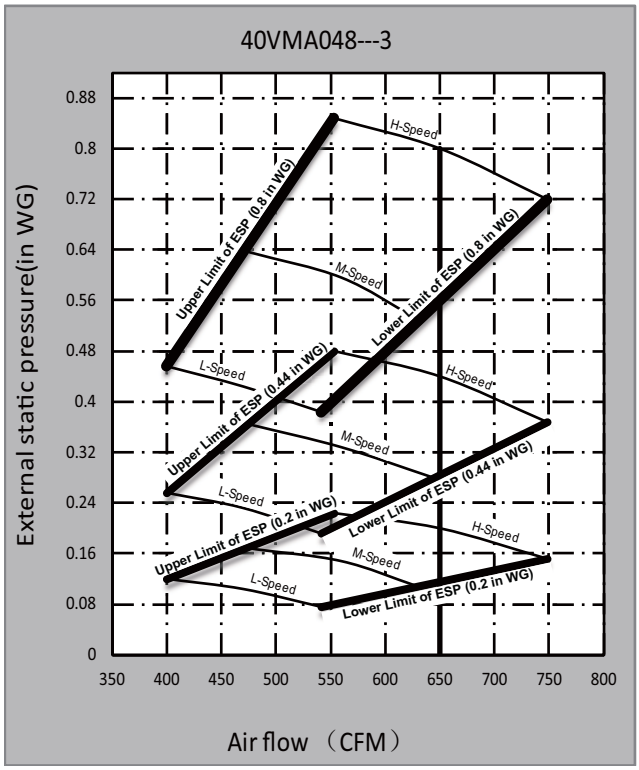

Fig. 5 —Size 048

ESP	Fan Speed	Range of Available Airflow Rate in H-Speed					
		Max Point		Rating Point		Min Point	
		Max CFM	SP (in.)	Mid CFM	SP (in.)	Min CFM	SP (in.)
0.20	H	744	0.15	647	0.20	550	0.22
0.24			0.19		0.24		0.26
0.28			0.23		0.28		0.30
0.32			0.27		0.32		0.34
0.36			0.31		0.36		0.38
0.40			0.34		0.40		0.43
0.44			0.37		0.44		0.48
0.48			0.41		0.48		0.52
0.52			0.45		0.52		0.56
0.56			0.49		0.56		0.60
0.60			0.53		0.60		0.64
0.64			0.57		0.64		0.68
0.68			0.60		0.68		0.73
0.72			0.64		0.72		0.77
0.76			0.68		0.76		0.81
0.80			0.72		0.80		0.85

LEGEND
ESP — External Static Pressure
SP — Static Pressure

FAN CURVE CHARACTERISTICS (CONT.)

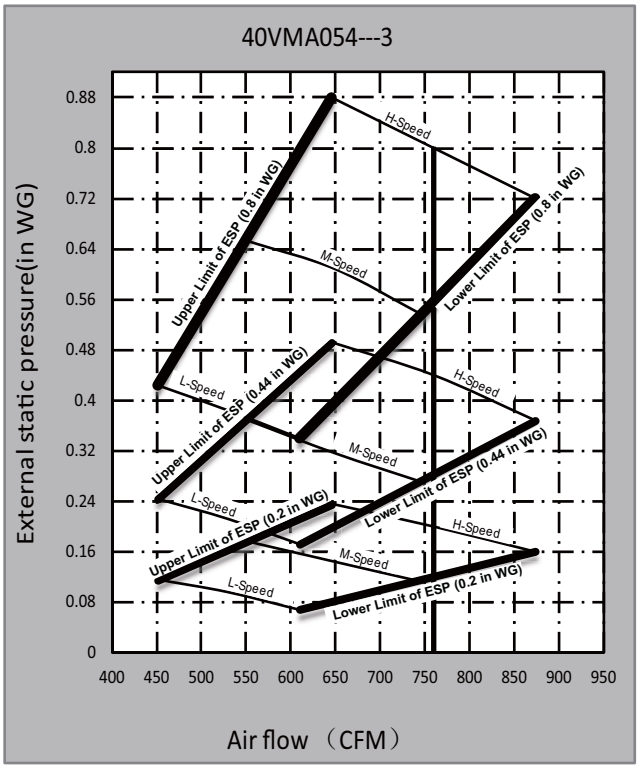

Fig. 6 —Size 054

ESP	Fan Speed	Range of Available Airflow Rate in H-Speed					
		Max Point		Rating Point		Min Point	
		Max CFM	SP (in.)	Mid CFM	SP (in.)	Min CFM	SP (in.)
0.20	H	880	0.16	765	0.20	650	0.24
0.24			0.20		0.24		0.28
0.28			0.24		0.28		0.32
0.32			0.28		0.32		0.36
0.36			0.31		0.36		0.40
0.40			0.34		0.40		0.44
0.44			0.37		0.44		0.49
0.48			0.41		0.48		0.53
0.52			0.45		0.52		0.57
0.56			0.49		0.56		0.61
0.60			0.53		0.60		0.66
0.64			0.57		0.64		0.71
0.68			0.60		0.68		0.76
0.72			0.64		0.72		0.80
0.76			0.68		0.76		0.84
0.80			0.72		0.80		0.88

LEGEND
ESP — External Static Pressure
SP — Static Pressure

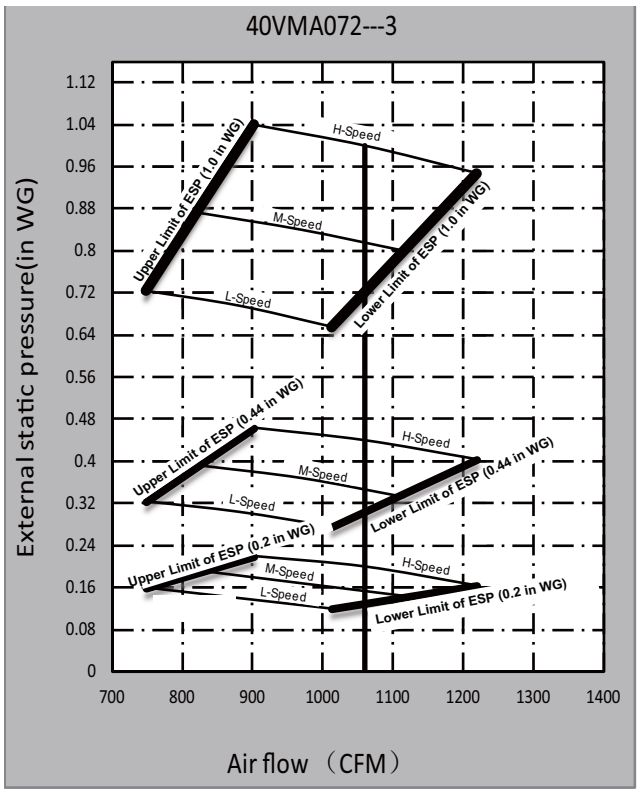

Fig. 7 —Size 072

ESP	Fan Speed	Range of Available Airflow Rate in H-Speed					
		Max Point		Rating Point		Min Point	
		Max CFM	SP (in.)	Mid CFM	SP (in.)	Min CFM	SP (in.)
0.20	H	1218	0.16	1059	0.20	900	0.22
0.24			0.20		0.24		0.26
0.28			0.24		0.28		0.30
0.32			0.28		0.32		0.34
0.36			0.32		0.36		0.38
0.40			0.36		0.40		0.42
0.44			0.40		0.44		0.46
0.48			0.44		0.48		0.50
0.52			0.48		0.52		0.54
0.56			0.52		0.56		0.58
0.60			0.56		0.60		0.62
0.64			0.60		0.64		0.66
0.68			0.64		0.68		0.70
0.72			0.68		0.72		0.75
0.76			0.71		0.76		0.80
0.80			0.75		0.80		0.84
0.84			0.79		0.84		0.88
0.88			0.83		0.88		0.92
0.92			0.87		0.92		0.96
0.96			0.91		0.96		1.00
1.00			0.95		1.00		1.04

LEGEND
ESP — External Static Pressure
SP — Static Pressure

FAN CURVE CHARACTERISTICS (CONT.)

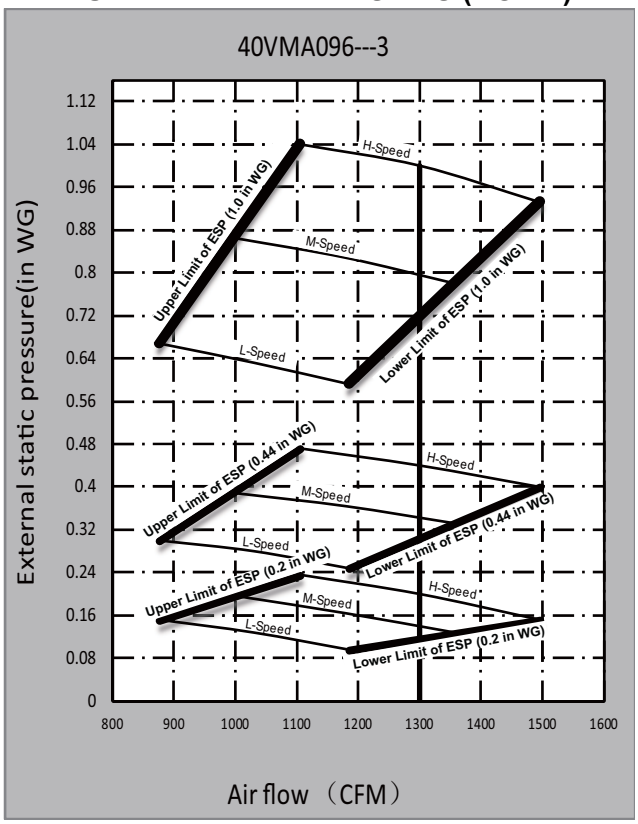

Fig. 8 —Size 096

ESP	Fan Speed	Range of Available Airflow Rate in H-Speed					
		Max Point		Rating Point		Min Point	
		Max CFM	SP (in.)	Mid CFM	SP (in.)	Min CFM	SP (in.)
0.20			0.15		0.20		0.24
0.24			0.19		0.24		0.28
0.28			0.23		0.28		0.32
0.32			0.27		0.32		0.36
0.36			0.31		0.36		0.40
0.40			0.35		0.40		0.44
0.44			0.40		0.44		0.47
0.48			0.44		0.48		0.51
0.52			0.48		0.52		0.55
0.56			0.52		0.56		0.59
0.60	H	1488	0.56	1294	0.60	1100	0.63
0.64			0.60		0.64		0.67
0.68			0.64		0.68		0.71
0.72			0.67		0.72		0.76
0.76			0.70		0.76		0.80
0.80			0.73		0.80		0.84
0.84			0.77		0.84		0.88
0.88			0.81		0.88		0.92
0.92			0.85		0.92		0.96
0.96			0.89		0.96		1.00
1.00			0.93		1.00		1.04

LEGEND
ESP — External Static Pressure
SP — Static Pressure

NOTES: (For Fig. 4 - 8):

1. There are multiple ESP settings for each ducted unit.
2. All fan curves show examples of fan characteristics of the MAX. ESP, RATING ESP, and MIN. ESP settings. These curves are shown for High (H), Medium (M), and Low (S) speeds as selected by the user at the controller.
3. All tables show air flows at H-Speed for each ESP setting.
4. ESP settings are listed in the first column of each table.
5. Select ESP setting according to connected ductwork system.
6. Refer to Wired Controller manual for details on static pressure settings.

INSTALLATION

Step 1 — Unpack the Inspect Units — Units are packaged for shipment to avoid damage during normal transit and handling. It is the receiving party's responsibility to inspect the equipment upon arrival. Any obvious damage to the carton and/or its contents should be reported on the bill of lading and a claim should be filed with the transportation company and the factory. The unit should always be stored in a dry place and in the proper orientation as marked on the carton.

⚠ CAUTION

To avoid equipment damage, do not lift unit by the drain pipe or refrigerant piping. The unit should be lifted using the mounting brackets.

After determining the condition of the carton exterior, carefully remove each unit from the carton and inspect for hidden damage. Make sure that items such as the accessory kit, thermostats, and controllers are accounted for whether packaged separately or shipped at a later date. Any hidden damage should be recorded, a claim should be filed with the transportation company, and the factory should be notified.

If a claim for shipping damage is filed; the unit, shipping carton, and all packing must be retained for physical inspection by the transportation company. All units should be stored in the factory shipping carton with internal packaging in place until installation.

PROTECTING UNITS FROM DAMAGE — Do not apply force or pressure to the coil, piping, or drain stub-outs during handling. All units should be handled by the chassis or as close as possible to the unit mounting point locations.

The unit must always be properly supported. Temporary supports used during installation or service must be adequate to hold the unit securely. To maintain warranty; protect units against hostile environments (such as rain, snow, or extreme temperature), theft, vandalism, and debris on job site. Equipment covered in this manual is not suitable for outdoor installations.

Do not allow foreign material to fall into the drain pan. Prevent dust and debris from being deposited on motor, fan wheels, and coils. Failure to do so may have serious adverse effects on unit operation, and in the case of motor and blower assembly, may result in immediate or premature failure. Failure of any unit caused by deposits of foreign material on the motor or blower wheels will not be covered by the manufacturer's warranty. Some units and/or job conditions may require some form of temporary covering during construction.

PREPARING JOB SITE FOR UNIT INSTALLATION — To save time and to reduce the possibility of costly errors, set up a complete sample installation in a typical room at the job site. Check all critical dimensions such as pipe, wire, and duct connections requirements. Refer to job drawings and product dimension drawings as required. Instruct all trades in their parts of the installation. Units must be installed in compliance with all applicable local code requirements.

IDENTIFYING AND PREPARING UNITS — Ensure the power requirements match the available power source. Refer to the unit nameplate and wiring diagram. In addition:

- Check all tags on the unit to determine if shipping screws are to be removed. Remove screws as directed.
- Rotate the fan wheel by hand to ensure that the fan is unrestricted and can rotate freely. Check for shipping damage and fan obstructions. Adjust blower motor as required.

Step 2 — Position the Unit —

⚠DANGER

Units must not be installed where they may be exposed to potentially explosive or flammable atmosphere. If this instruction is not followed exactly, a fire or explosion may result, causing property damage, injury, or loss of life.

Install the unit in a location that meets the following requirements:

- Allow adequate space for installation, service clearance, piping and electrical connections, and necessary ductwork. For specific unit dimensions, refer to Table 2, and Figs. 2 and 3. Allow clearance according to local and national codes.
- Confirm that the ceiling is able to support the weight of the unit. See Table 2 for nominal weight.
- There should be enough room within the false ceiling for installation and maintenance. See Fig. 9 and 10.
- The false ceiling should be horizontal and leveled.
- Install the unit in a location within the room that allows uniform air flow in all directions.

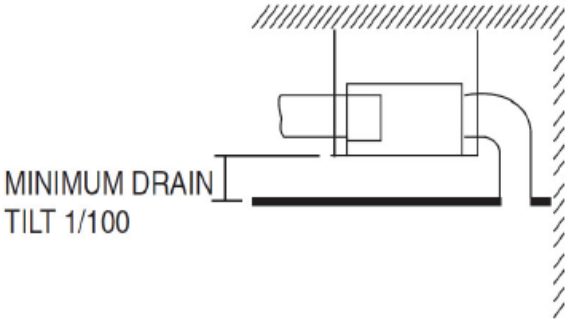

Fig. 9 —False Ceiling Installation

Select the unit position with the following points in mind:

- The unit should be installed in a position that is suitable to support the total weight of the unit, refrigerant piping, and condensate.
- Proper access should be provided for maintenance for refrigerant piping, EEV (electronic expansion valve), electrical box, and condensate pump. A 2-ft clearance is recommended all around the unit.

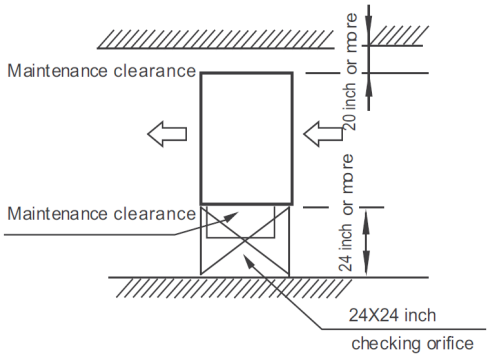

Fig. 10 —Maintenance Space Requirements

- The unit should not be positioned directly above any obstruction.
- The unit must be installed square and level.

IMPORTANT: Ensure the ceiling grid is supported separately from the unit. The ceiling grid must not be supported by any part of the unit or any associated wiring or piping work.

Step 3 — Mount the Unit —

INSTALLING HANGER BOLTS — Install the hanger bolts at the locations shown in Fig. 2. Use 3/8-in. all-threaded rod. For unit weight, see Table 2.

MOUNTING UNIT — The unit can now be lifted on to the hanging rods for mounting.

1. Use rods and fasteners to suspend the unit at the factory-provided mounting holes.
2. Adjust the height of the unit until the bottom is level with the false ceiling. Make sure there is adequate space to provide enough pitch for the drain.
3. Secure the unit in position with locknuts and washers on both sides of the mounting bracket. Ensure that the threaded rod does not protrude more than two inches below the mounting brackets as shown in Fig. 11.

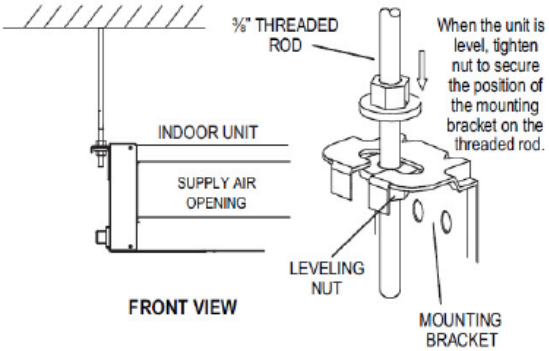

Fig. 11 —Threaded Rod

INSTALLING DUCT — Connect the return and supply ducts to the duct collars provided on the unit. Adequate distance between the return and supply diffusers should be maintained to avoid short circulation of air within the space. The filter is located on the return side (rear) of the unit.

Step 4 — Connect Piping —

CONDENSATE PIPING — The unit is supplied with a one-inch OD drain connection to connect copper or PVC drain piping as shown in Fig. 12. Units of capacity size 36-54 kBtu/h come with a factory-installed condensate pump. Maximum pump lift is 27-1/2 inches. Units of capacity size 72-96 kBtu/h do not have a factory-installed condensate pump.

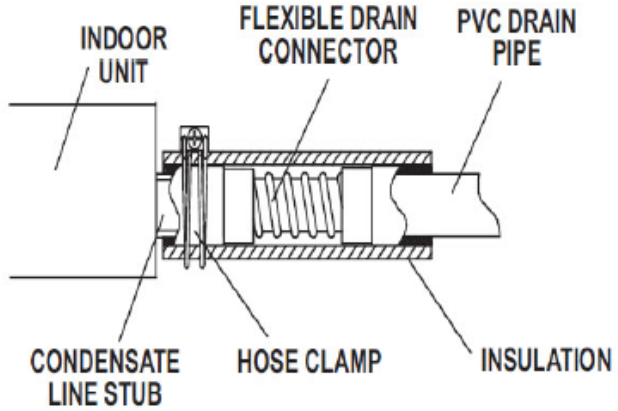

Fig. 12 —Condensate Drain Connection (036-054)

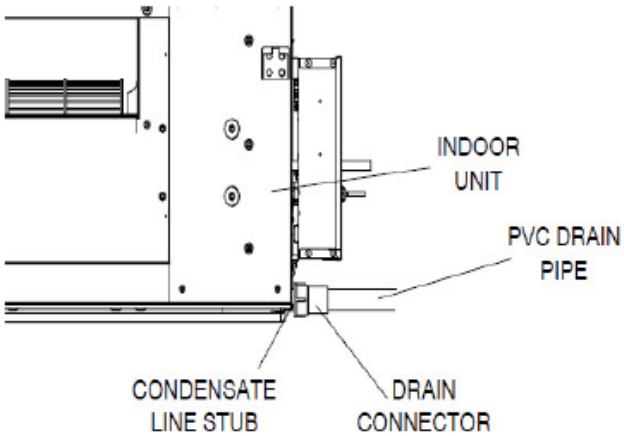

Fig. 13 —Condensate Drain Connection (072-096)

When installing condensate piping, follow these guidelines:

- The highest point in the condensate piping should be as close to the unit as possible. See Fig. 14.
- Condensate piping should slope downward in the direction of condensate flow with a minimum gradient of 1 inch per 100 inches. See Fig. 15.

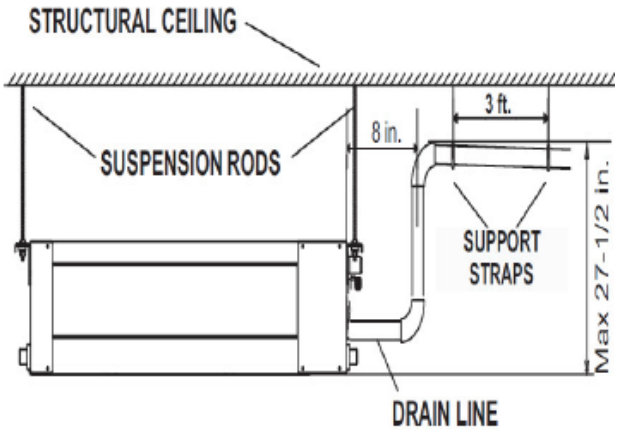

Fig. 14 —Condensate Piping

- When multiple units are connected to a common condensate drain, ensure that the drain is large enough to accommodate the volume of condensate from all units. It is also recommended to have an air vent in the condensate piping to prevent air lock.
- Condensate piping must not be installed where it may be exposed to freezing temperatures.

NOTE: CN18 can be disconnected to stop the pump. The condensate switch is switch CN5, which can be used for gravity drain protection. See Fig. 15.

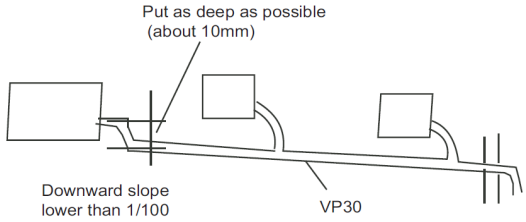

Fig. 15 —Using a Main Drain to Serve Multiple Indoor Units with Internal Condensate Pumps

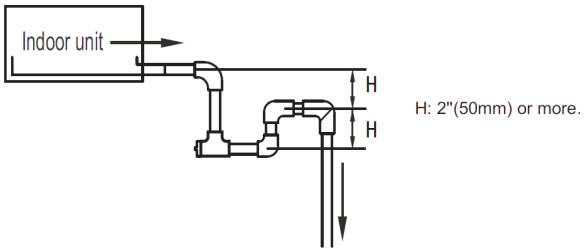

Fig. 16 —Trap at Piping End

⚠ CAUTION

When connecting from an indoor unit to an outdoor unit, the isolation valve at the outdoor unit should be in the closed position throughout the refrigerant piping process.

Failure to follow this procedure may result in equipment damage.

When connecting refrigerant piping from an indoor unit to an outdoor unit, follow these guidelines:

- Check the maximum height drop and length of refrigerant piping between the indoor and outdoor units. To ensure the drop and length are acceptable, refer to the refrigerant piping allowable limits in the outdoor unit installation manual.
- The number of bends in the refrigeration piping must be fewer than 15.
- Refrigerant piping connection between indoor and outdoor units should be performed once the units are secured at their respective installation locations.
- The refrigeration piping starts at the indoor unit and ends at the outdoor unit or Multi-Port Distribution Controller (MDC) (Heat Recovery systems).
- The refrigerant piping should be dry and free of dust and other impurities.
- The bending angle of the refrigerant pipe should not exceed 90° and the bending radius should be as large as possible to prevent any breakage in piping.
- Use proper cutting and flaring tools to avoid leakage.
- Use a torque wrench for flare nuts. Refer to Table 3 for flare nut torque recommendations.

Table 3 —Flare Nut Torque Recommendations

Outside Diameter	Recommended Torque (FT-LB)
1/4	15
3/8	26
1/2	41
5/8	48

- Before insulating the suction and liquid refrigeration pipes, perform pressure and leak tests. For details, see the outdoor unit installation manual. Insulating both suction and liquid refrigerant pipes is mandatory.
- Vacuuming and charging of the system should be carried out as described in the outdoor unit installation manual.

Step 5 — Complete the Electrical Connections —

Installation of wiring must conform with local building codes and with National Electric Code ANSI/NFPA 70, current editions. Units must be electrically grounded in conformance with the code. In Canada, wiring must comply with CSA C22.1, Electrical Code.

⚠ WARNING

Electrical shock can cause personal injury and death. Disconnect power supply before making wiring connections. There may be more than one disconnect switch. Tag all disconnect locations to alert others not to restore power until work is completed.

⚠ WARNING

All units must be wired strictly in accordance with the wiring diagram furnished with the unit. Any wiring different from the wiring diagram could result in personal injury and property damage.

⚠ CAUTION

Any original factory wiring that requires replacement must be replaced with wiring material having a temperature rating of at least 105°C.

Ensure supply voltage to the unit, as indicated on the serial plate, is not more than 10% over the rated voltage or 10% under the rated voltage.

Failure to follow these recommendations may result in equipment damage.

This equipment in its standard form is designed for an electrical supply of 208/230-1-60. Any damage to or failure of units caused by incorrect wiring or voltage is not covered by the warranty.

Electric wiring must be sized to carry the full load amp draw of the motor, starter, and any other controls that are used with the unit. See Table 4 for electrical data.

Table 4 —40VMA Electrical Data

40VMA Unit Size	Power Supply	
	MCA	MOPD
36	5.7	15
48	6.3	
54	6.9	
72	8.5	
96	10.0	

LEGEND
MCA - Minimum Circuit Amps
MOPD - Maximum Overcurrent Protective Device

After the pipe work is complete, the electrical supply can be connected by routing the cable through the appropriate casing holes or knockouts and connecting the supply and ground cables to the unit's power terminal.

Be sure the power wiring and control wiring do not cross, as this might cause disturbance on the controls side. See Figs. 17 and 18 for the wiring diagram.

NOTE: The indoor unit requires its own power supply. Indoor units are not powered through outdoor units.

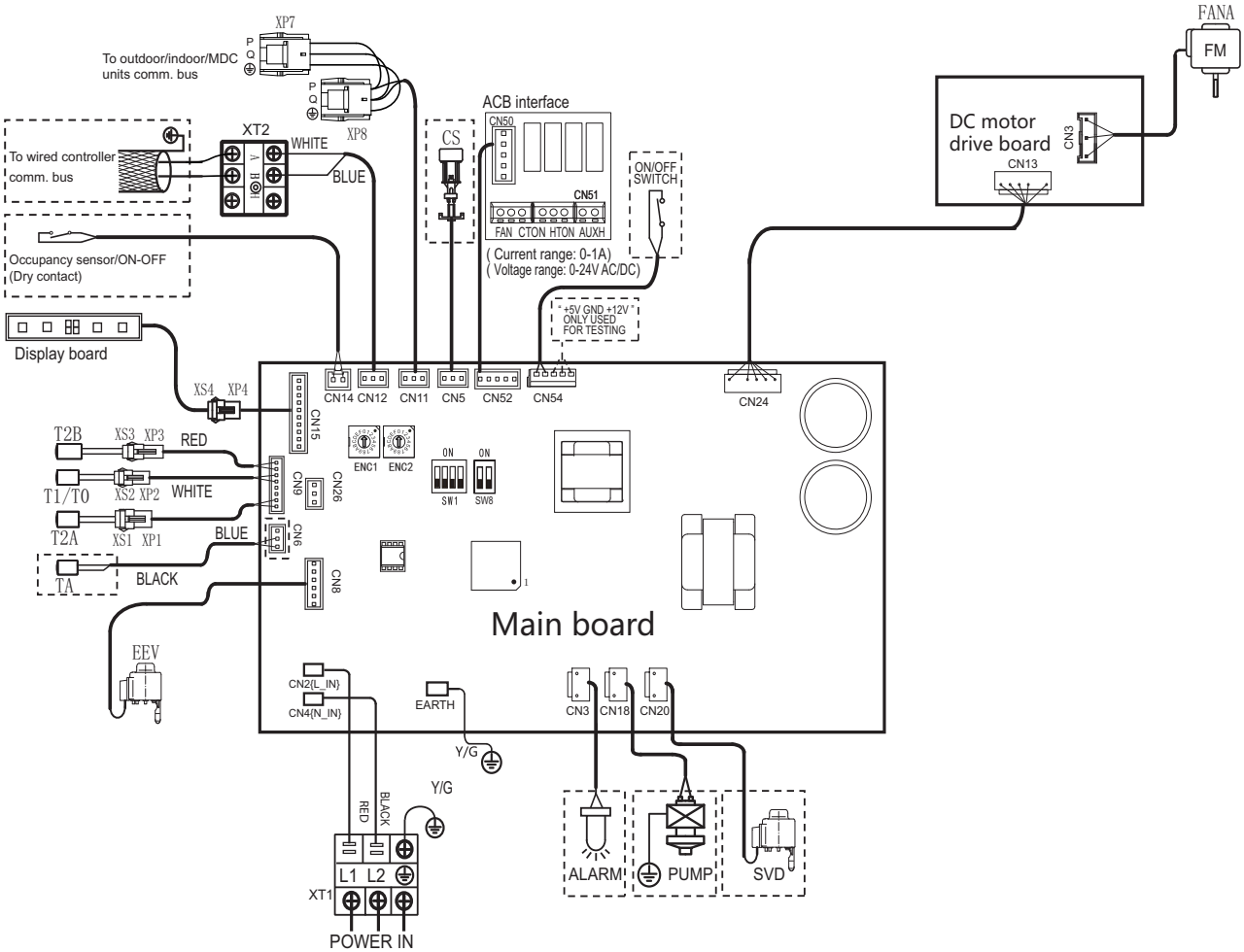

Fig. 17 —40VMA036-054 Typical Wiring Diagram

LEGEND

NOTE: Field wiring must use copper conductors only

ACB	—	Auxiliary Control Board
ALARM	—	Warning Lamp
AUXH	—	Output for Auxiliary Heat
CS	—	Condensate Switch
CTON	—	Output for Cooling Operation
EEV	—	Electronic Expansion Valve
FAN	—	Output for Fan Operation
FM	—	Indoor Fan Motor
HTON	—	Output for Heating Operation
PUMP	—	Pump Motor
T1/T0	—	Room Temperature Sensor
TA	—	Room Temperature Sensor
T2A	—	Inlet Pipe Temperature Sensor
T2B	—	Outlet Pipe Temperature Sensor
XP1-8	—	Connectors
XS1-4	—	Connector
XT1-2	—	Terminal Block
----------	—	Optional Component or Field Wiring

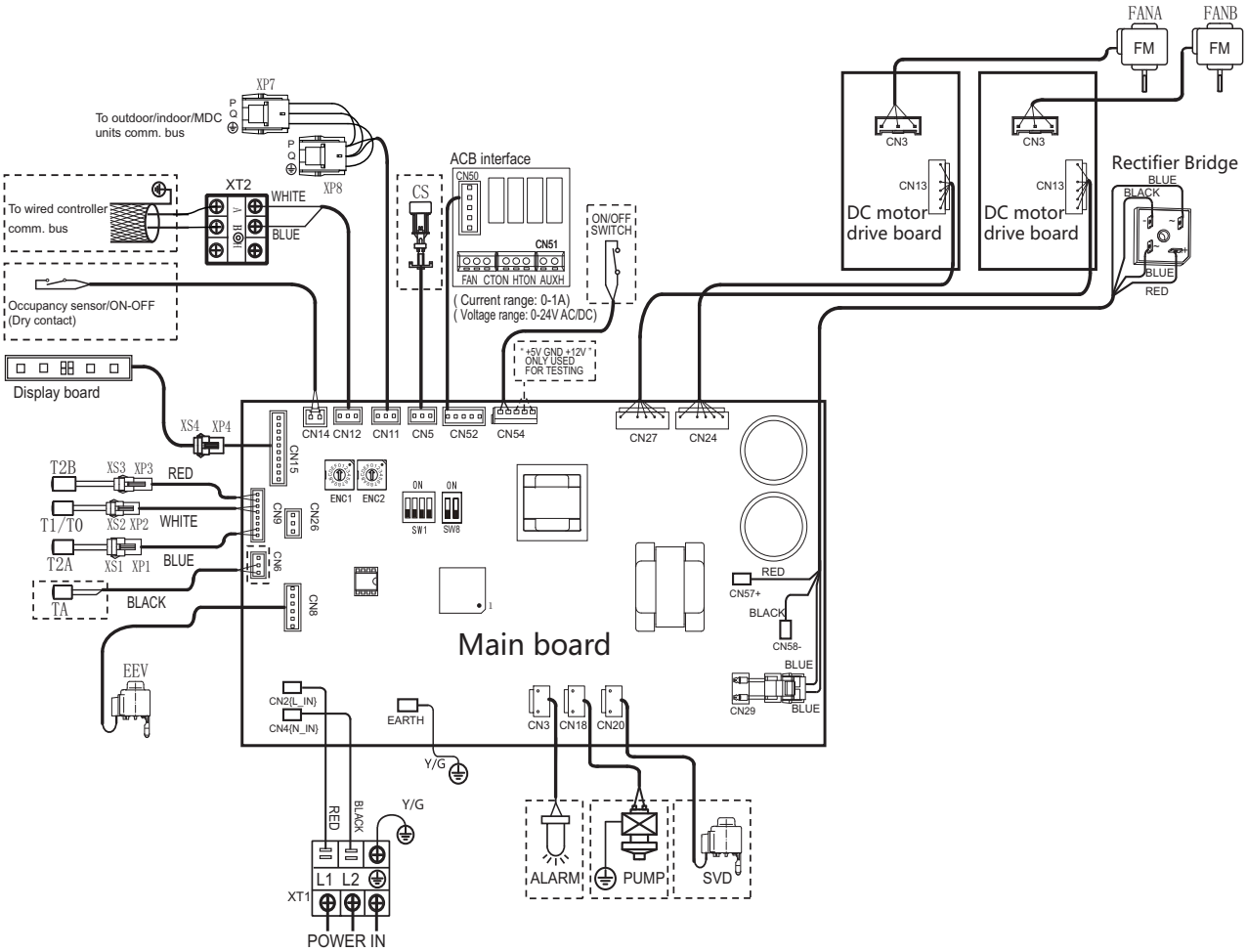

Fig. 18 —40VMA072-096 Typical Wiring Diagram

LEGEND

NOTE: Field wiring must use copper conductors only

ACB	—	Auxiliary Control Board
ALARM	—	Warning Lamp
AUXH	—	Output for Auxiliary Heat
CS	—	Condensate Switch
CTON	—	Output for Cooling Operation
EEV	—	Electronic Expansion Valve
FAN	—	Output for Fan Operation
FM	—	Indoor Fan Motor
HTON	—	Output for Heating Operation
PUMP	—	Pump Motor
T1/T0	—	Room Temperature Sensor
TA	—	Room Temperature Sensor
T2A	—	Inlet Pipe Temperature Sensor
T2B	—	Outlet Pipe Temperature Sensor
XP1-8	—	Connectors
XS1-4	—	Connector
XT1-2	—	Terminal Block
----------	—	Optional Component or Field Wiring

Step 6 — Installing the LED Display Panel —

1. Insert the buckles into the grooves in the electronic control box, and slide the display panel horizontally to lock in place as shown in Figs. 18 and 19.

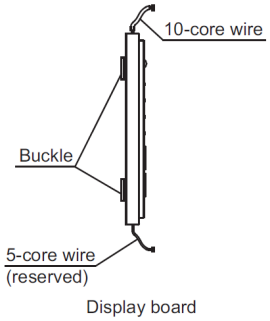

Fig. 18 —LED Display Panel

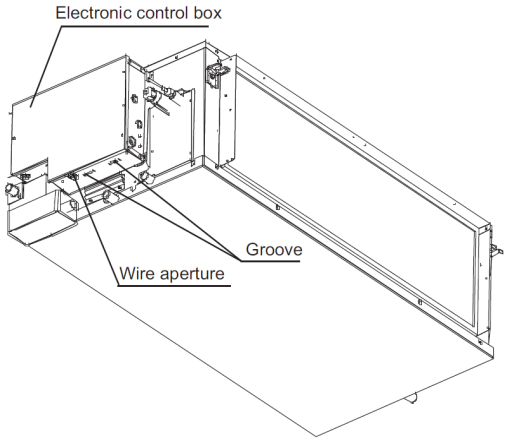

Fig. 19 —LED Display Panel Installation Location

2. The display panel has buckles on the bottom that are used to secure it to the control box as shown in Fig. 19.
3. Connect the 10-core wire of the display board and control board assembly through the wire aperture on the electronic control box.
4. Connect the 5-core wire of the display board and wire controller.

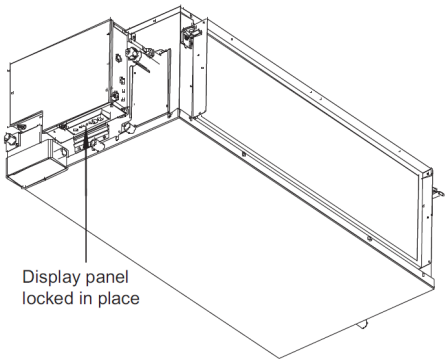

Fig. 20 —LED Display Panel Installed

Step 7 — Position and Connect Controller —

Wired controllers should be installed in a position that maintains good temperature control:

- Position the thermostat approximately 48 inches above floor level.
- Do not position thermostat where it can be directly affected by the unit's discharge air-stream.
- Avoid external walls and drafts from windows and doors.
- Avoid positioning near shelves and curtains as these restrict air movement.
- Avoid heat sources such as direct sunlight, heaters, dimer switches, and other electrical devices.
- See Fig. 21 for an example of communication wire connection.

CONTROL WIRING

1. The type of communication cable used is a 2-core stranded shielded cable.
2. For IDU (indoor unit) and ODU (outdoor unit) communication, use P, Q terminals. Shielded core should be used for ground.
3. Wiring should be done according to wiring diagram.
4. Communication wire must not form a closed loop.

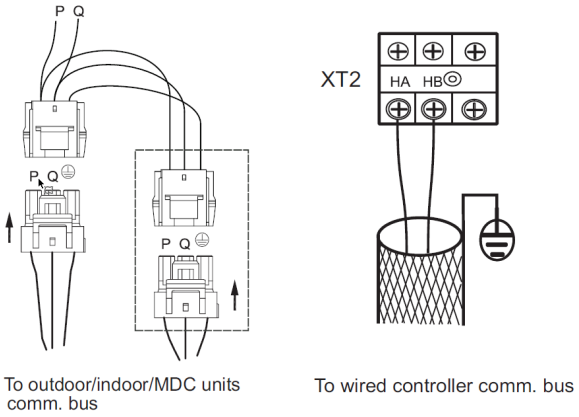

Fig. 21 —Communication Wire Connection

OPTION/EXTENSIONS OF COMMUNICATION WIRING
To extend control wiring or make terminal connections, use the PQE connection wire supplied in the accessory kit and follow these steps.

1. Cut the connector on the outdoor unit side as shown in Fig. 22.

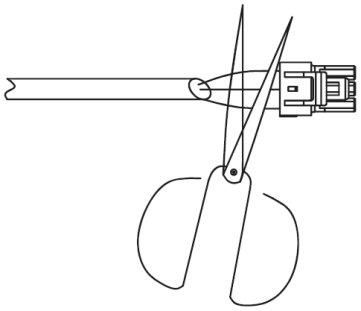

Fig. 22 —Shearing Outdoor Connector

2. Strip a suitable length of the insulation layer as shown in Fig. 23.

Fig. 23 —Stripping the Wire

3. Use a suitable screwdriver to attach the communication wire on the outdoor unit communication terminal as shown in Fig. 24.

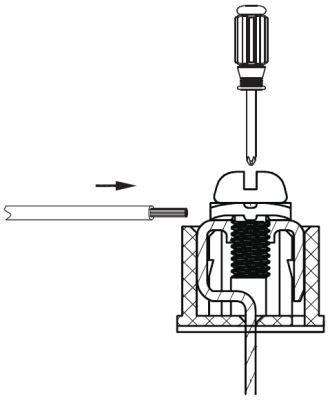

Fig. 24 —Connecting Communication Wire to Outdoor Unit Communication Terminal

If communication wires are use to connect indoor units, find corresponding port and plug it in directly as shown in Fig. 25.

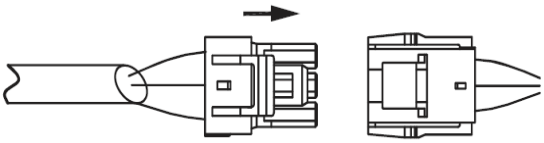

Fig. 25 —Connecting the Communication Wires

If it is not possible to buy communication wires from Carrier, connect the indoor unit side of the communication wires using the connector provided with the accessories as shown in Fig. 26. See Fig. 27 and 28 for typical communication wiring of the heat pump and heat recovery systems.

⚠ CAUTION

Failure to follow these procedures may result in personal injury or damage to equipment.

NEVER CONNECT the main power source to the control or communication terminal block.

USE AN APPROPRIATE SCREWDRIVER for tightening the terminal screws. Do not over tighten the terminal screws.

IMPORTANT: Wiring for communication shall be two inches or more apart from power source wiring to avoid electric noise. Do not insert control/communication and power source wire in the same conduit. Make sure the polarity of the communication wire is correct.

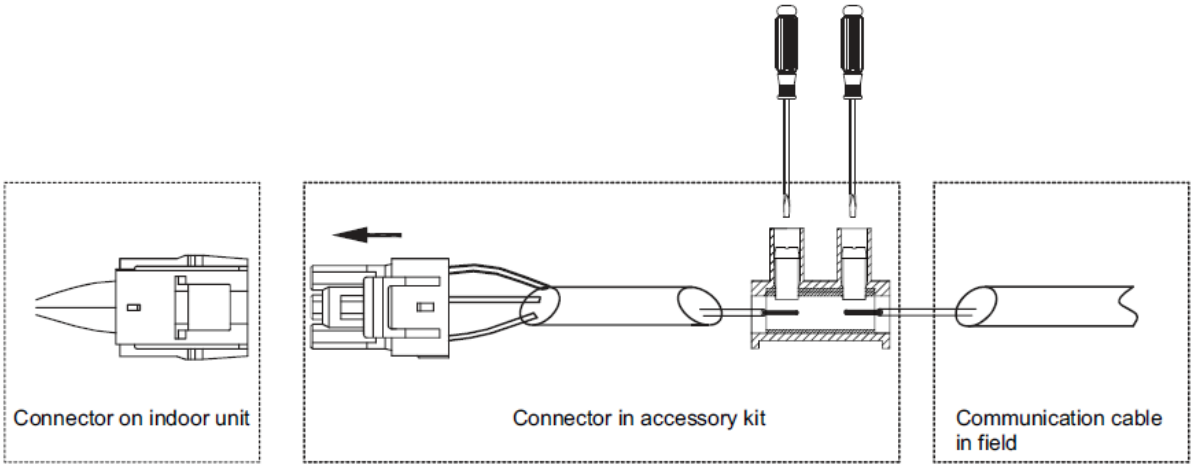

Fig. 26 —Connecting the Communication Cable to Indoor Unit Using the Supplied Connector

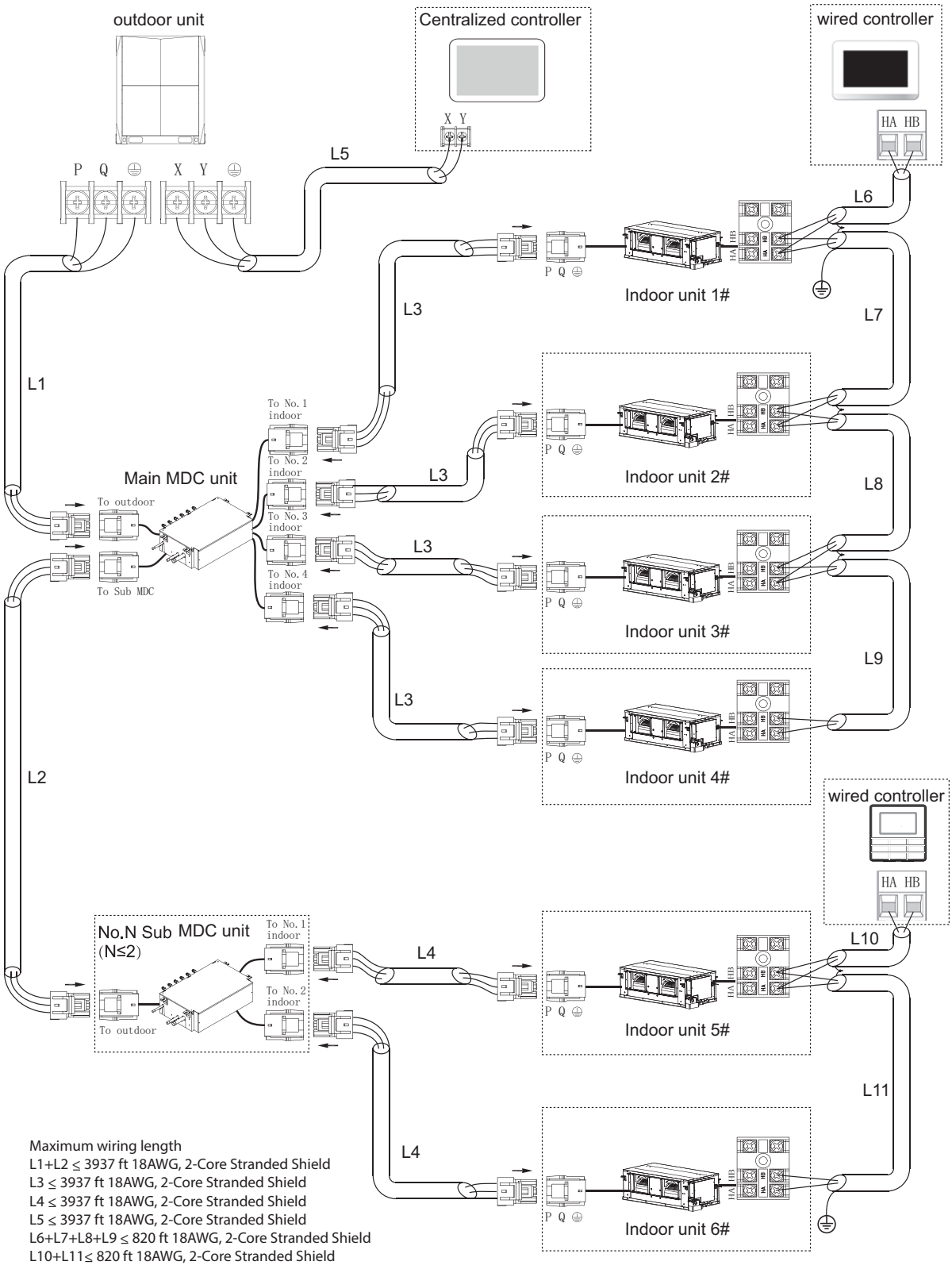

Fig. 27 —Typical Heat Recovery System Communication Wiring

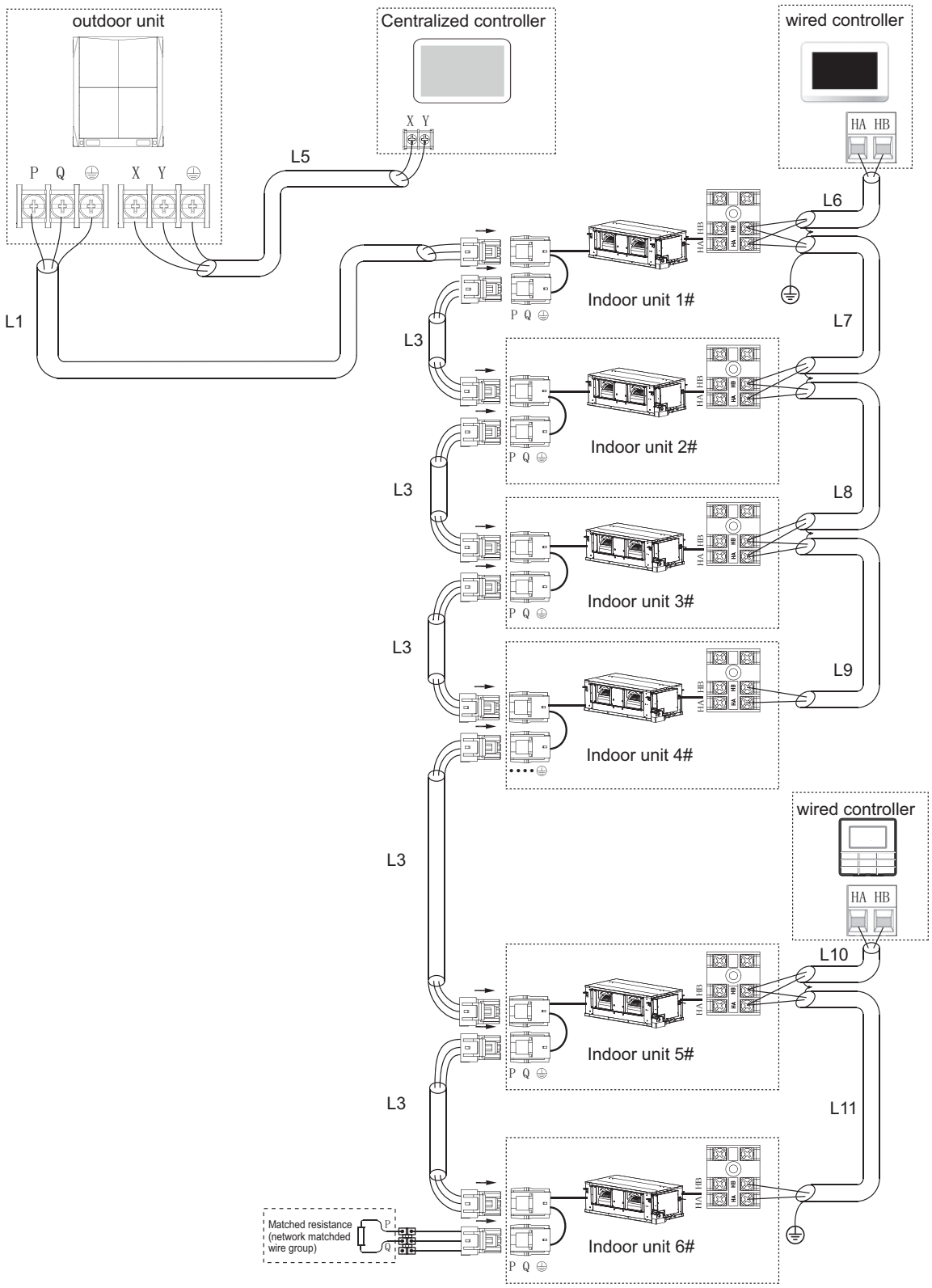

Maximun wiring length
L1+L3 ≤ 3037 ft 18 AWG, 2-Core Stranded Shield
L5 ≤ 3037 ft 18 AWG, 2-Core Stranded Shield
L6+L7+L8+L9 ≤ 820 ft 18 AWG, 2-Core Stranded Shield
L10+L11 ≤ 820 ft 18 AWG, 2-Core Stranded Shield

NOTE: Network resistor is shipped with the outdoor unit for field installation on the heat pump system.

Fig. 28 —Typical Heat Pump System Communication Wiring

IMPORTANT: The system can connect 64 indoor units with different system addresses. If two indoor units in the same system have identical addresses, abnormal operation will occur.

ACB INTERFACE

The ACB interface is a dry contact board that can output up to four signals controlling devices. Refer to Fig. 17, 18, and 29 for connecting the ACB interface board and devices.

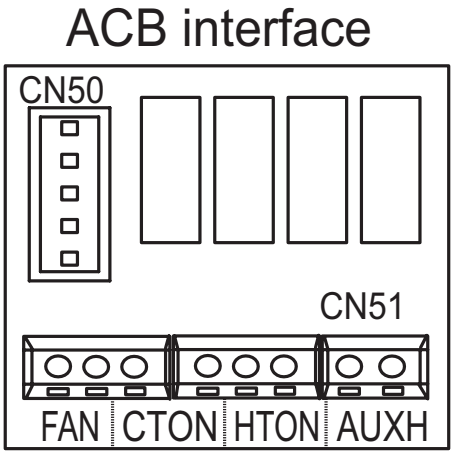

MAX AMPS	1A
MAX VOLTAGE	24V

LEGEND

ACB	– Auxiliary Control Board
FAN	– Output for fan Operation
CTON	– Output for Cooling Operation
HTON	– Output for Heating Operation
AUXH	– Output for Auxiliary Heat

Fig. 29 —ACB Interface

START-UP

Pre-Start Check — Once the installation is complete, perform the following pre-start checks:

1. All indoor and outdoor units are properly installed.
2. All piping and insulation is complete.
3. All electrical connections (both power and control) are properly terminated.
4. All condensate drains are installed correctly.
5. The power supply is of the right voltage and frequency.
6. The units are properly grounded in accordance with current electrical codes.
7. Suction and liquid line service valves are in open position.

System Operation Check — Once the installation and pre-start checks are completed, follow these steps:

1. Using remote controller, select cooling or heating mode to check the operation of the system.
2. While the system is in operation, check the following on the indoor unit:
   a. Switches or buttons on the remote controller are easy to push.
   b. The indicator light is showing normal operation and no error is indicated.
   c. Swing mode of air louvers is working (if applicable to the unit).
   d. Drain pump operation is normal (if applicable).
   e. No abnormal vibration or noise is noticed.
3. While the system is in operation, check the following on the outdoor unit:
   a. No abnormal vibration or noise is noticed.
   b. Condenser fan is in operation.
   c. Indicator light is showing normal operation and no error is indicated.

NOTE: If the unit is turned off or restarted, there is a time delay of three minutes for the compressor to start from the time the power is restored.

MAINTENANCE

Fan Assembly Maintenance — Refer to the following figures and instructions for removing fan assemblies as needed for repair and service.

⚠ CAUTION

When servicing or repairing this unit, use only factory approved service replacement parts. Refer to the rating plate on the unit for complete unit model number, serial number, and company address.

Any substitution of parts or controls not approved by the factory will be at the owner's risk and may result in equipment damage.

⚠ CAUTION

To avoid equipment damage, do not attempt to reuse any mechanical or electrical controllers that have been exposed to moisture. Replace the defective controller.

⚠ CAUTION

1. Shut down the unit and cut off power performing maintenance.
2. Before dismounting the fan assembly, disconnect all wires between the fan and the controller.
3. The Fan sub-assembly is very heavy so be careful while handling. Otherwise physical injury can occur.

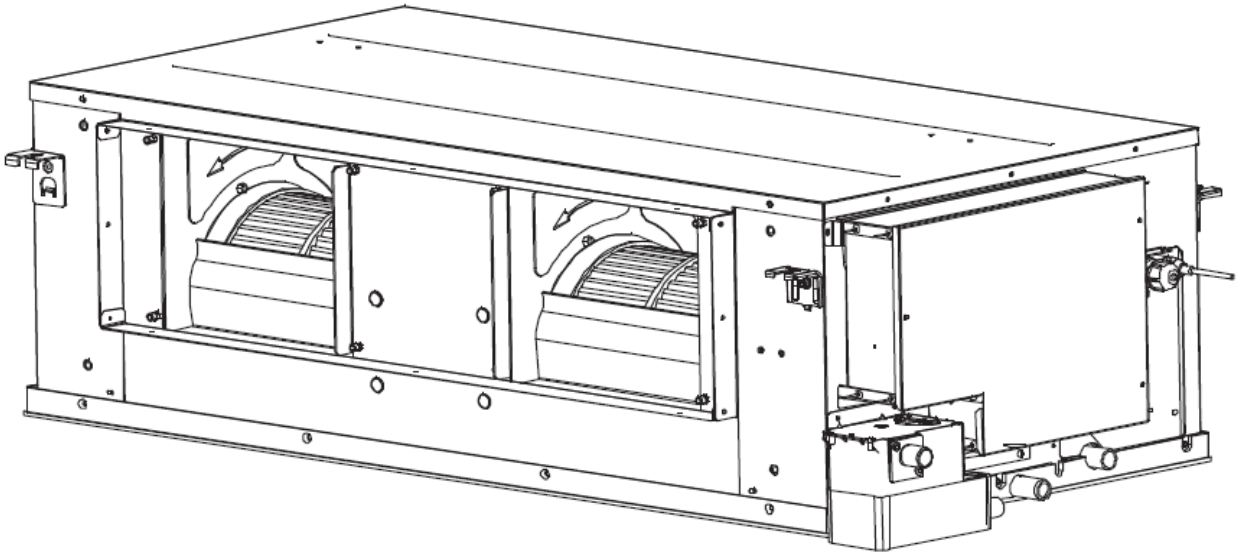

Fig. 30 —Fan Disassembly 036-054

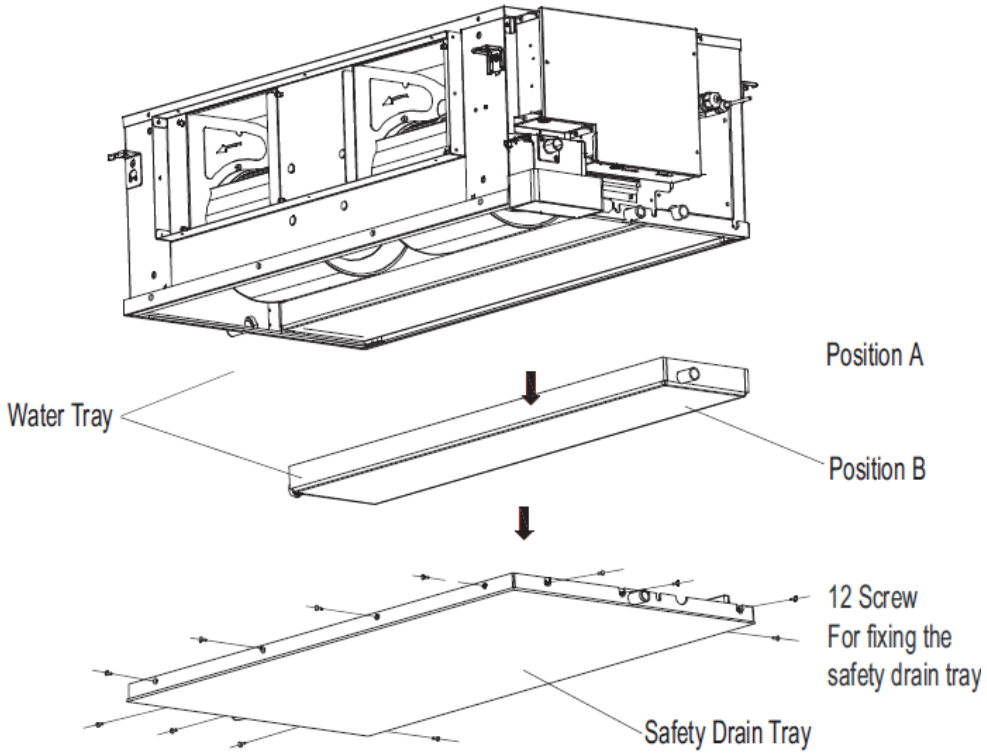

Fig. 31 —Fan Disassembly 036-054

Fig. 30 provides an example of the unit.

1. Remove the 12 screws from the fixed Safety Drain Tray, and take off the tray as shown in Fig. 31.
2. Take off the tray along the direction of the arrow as shown in Fig. 31.
3. Clean the tray and evaporator.
4. Re-install the unit by following step 2, and then step 1.

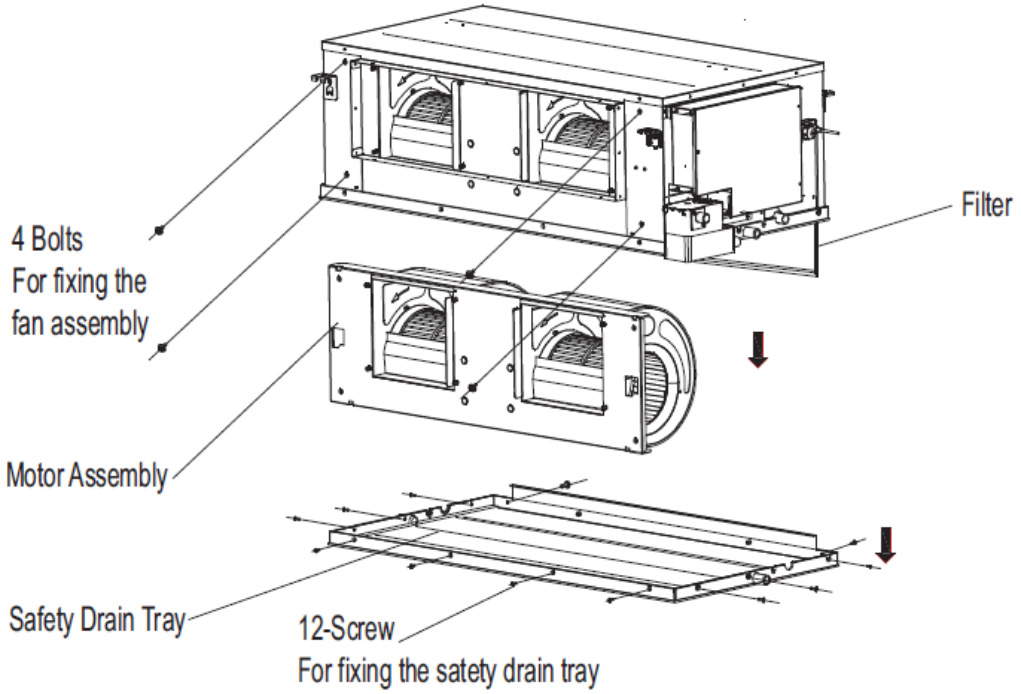

Fig. 32 —Fan Disassembly 036-054

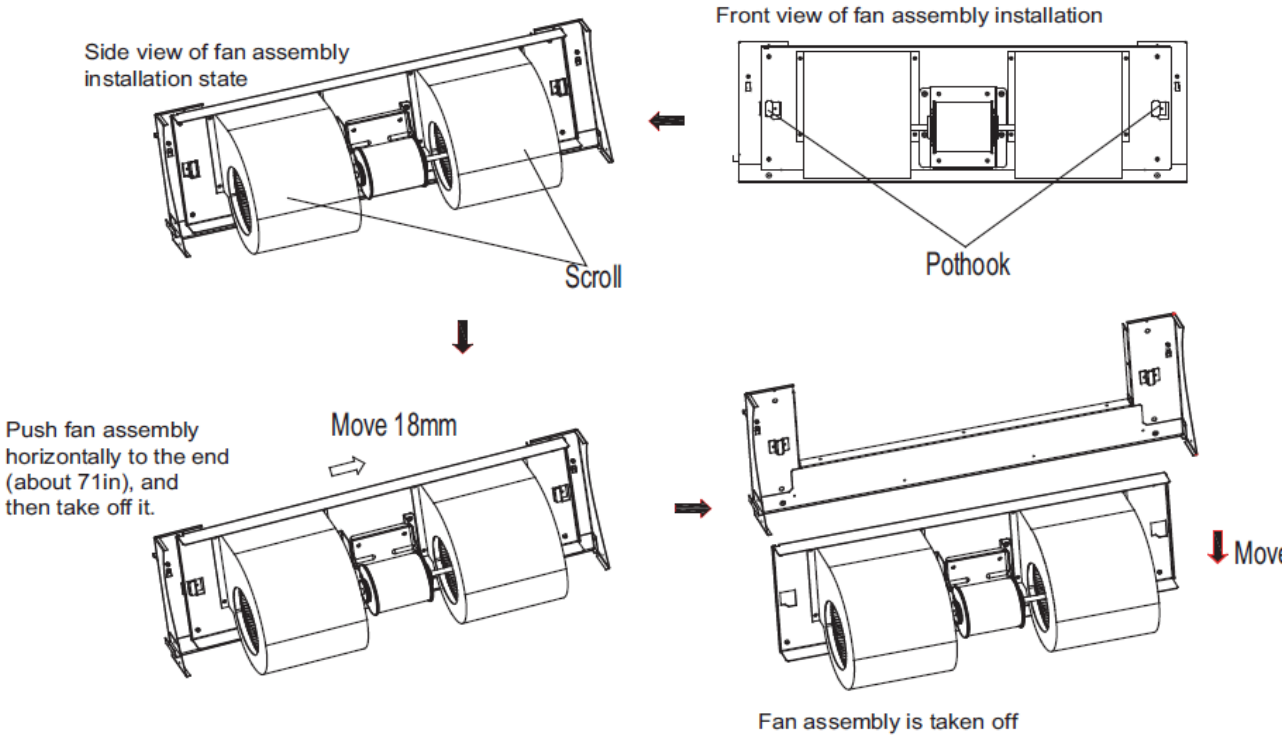

Fig. 33 —Fan Disassembly 036-054

1. Remove all 12 screws from the Safety Drain Tray, and remove the safety drain tray as shown in Fig. 32.
2. Remove all four bolts from the fan assembly as shown in Fig. 33.
3. Horizontally push fan assembly until it cannot not move any further.
4. Lift up slightly and take down to remove as shown in Fig. 33.
5. After the motor maintenance is complete, reinstall the fan assemblies, and connect the motor with electric control box.

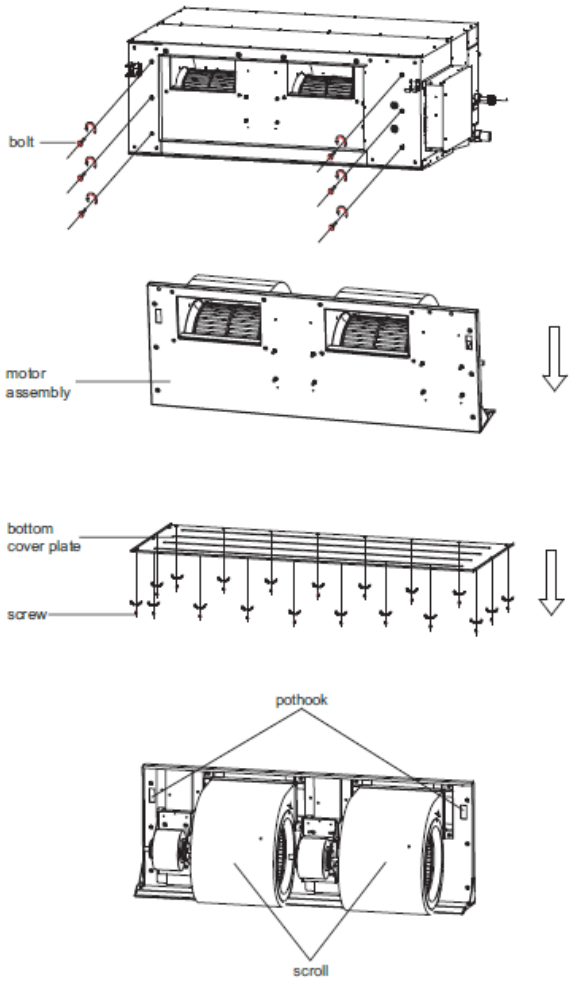

Fig. 34 —Fan disassembly (072-096)

1. Remove the bottom cover plate as shown in Fig. 34.
2. Remove the six bolts from the front plate.
3. Support the fan sub-assembly from the bottom, and lift up to remove the fan sub-assembly.
4. After motor maintenance is complete, install the motor assembly in the reverse order of steps 1, 2, and 3 (steps 3, 2, and 1).
5. During this process, the indoor unit does not need to be removed.

IMPORTANT: During this process, the indoor unit does not need removed.

EVERY 3 MONTHS:

- Check the air filter condition. Clean or replace if necessary.

EVERY 6 MONTHS:

Follow 3-month maintenance schedule. In addition:

- Clean the condensate tray with suitable cleaning agent.
- Clean the grille and panel if applicable.

EVERY 12 MONTHS:

Follow the 6-month maintenance schedule. In addition:

- Ensure all the electrical connections are secure.
- Check the condensate pump operation (if applicable).
- Check the heating and cooling action to confirm proper operation.

INDOOR UNIT ADDRESSING

For proper system operation, each indoor unit must have a unique address set from 0 to 63. When setting an address by remote controller; the outdoor units, indoor units, and MDC must be powered on. If **FE** appears on the LED screen or display board, this unit has no address. After setting all indoor units' addresses, turn off the power supply to all indoor units to clear errors.

Indoor units' addressing can be distributed automatically in the heat pump system. When dip switch "S6" on the outdoor unit's main PCB board is set to 00 (default set in factory), indoor units are set for auto-addressing. When powering on for the first time, it takes six minutes or more to finish auto-addressing each indoor unit.

IMPORTANT: The heat recovery system cannot accomplish this function at this time.

Wireless Remote Controller (40VM900001)

Indoor unit addressing can be performed using the wireless remote controller. When using the wireless controller, the user must maintain a line of sight with the receiver on the indoor unit. See Fig. 35 for a description of the buttons on the wireless remote.

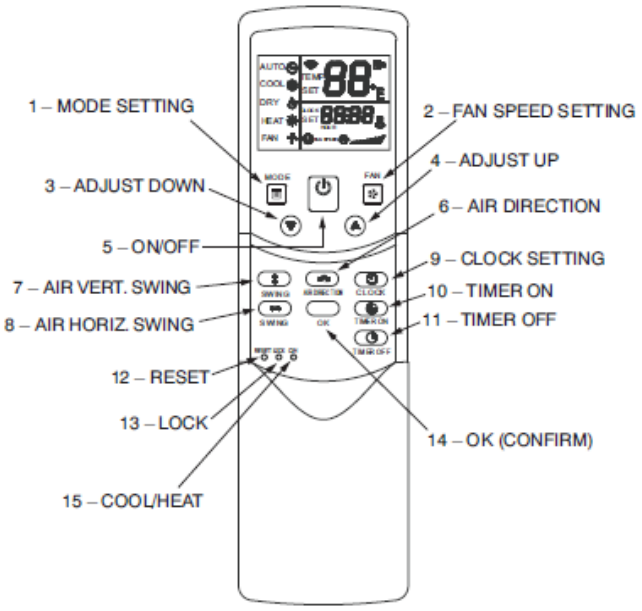

Fig. 35 —Wireless Remote Controller (40VM900001)

Use a tool to press and hold **LOCK** for at least ten seconds, and press FAN to activate. Click ▲ or ▼ to select an address, and press ✻ to send the setting. To display an indoor unit address, use a tool to press and hold **LOCK** for at least ten seconds, and press MODE to query the address.

Programmable Controller (40VM900003)

When setting an address, connect only one wired controller to an indoor unit.

1. Press **FAN** and **BACK** simultaneously for five seconds to access parameter settings as shown in Fig. 36.

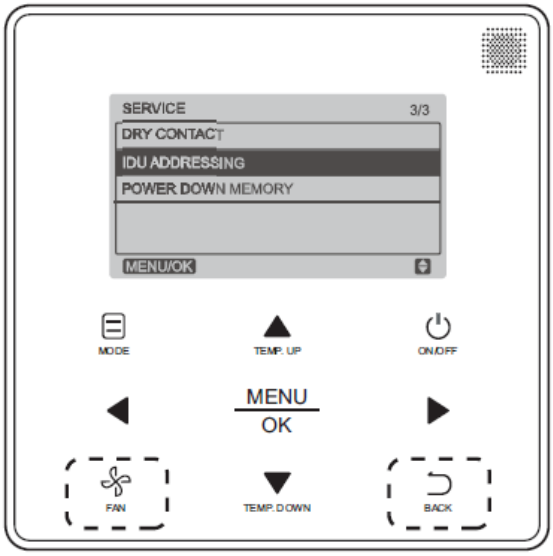

Fig. 36 —Programmable Controller (40VM900003) IDU Addressing Menu

2. Press **TEMP. UP** or **TEMP. DOWN** to move the cursor and select IDU ADDRESSING. Select MENU/OK to access this setting.
3. Press **TEMP. UP** or **TEMP. DOWN** to choose the address you want to set as shown in Fig. 37. Press **MENU/OK** to send this address to the IDU.

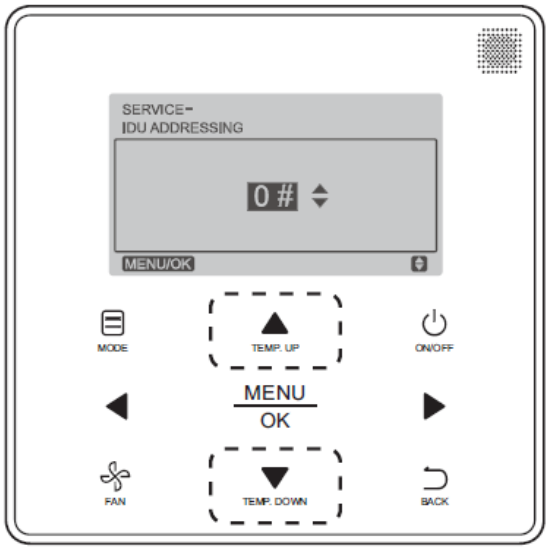

Fig. 37 —Programmable Controller (40VM900003) Setting IDU Address

4. Press **BACK** twice or wait 30 seconds to automatically exit the parameter settings menu.

TROUBLESHOOTING

Figure 38 shows the indoor unit's LED display panel. See Table 5 for a summary of display indicators. Table 6 lists problems, possible causes, and possible solutions.

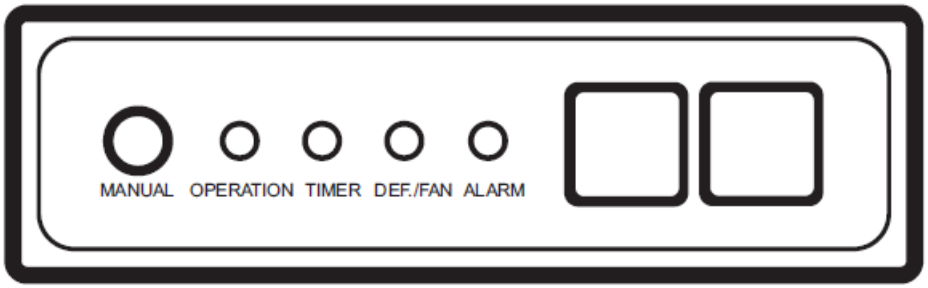

Fig. 38 —LED Display Panel

Table 5 —LED Display Indicators

ERROR CODE	LED DISPLAY	MODE/STATUS
[NO ERROR]	Operation Light ON	Starting
	None	Shutdown
	Operating Light Flashing	Standby
	Timer Light ON	Timing ON
	Timer Light OFF	Timing OFF
	Operation and Defrost/Fan Light ON	System Defrost ON
	Operation and Defrost/Fan Light OFF	System Defrost OFF
	Operation Light ON	Only FAN
dd	None	Heating/Cooling Mode Conflict
E1		Communication Error Between Indoor and Outdoor Unit
E2		Check Indoor Ambient Temperature Sensor (T1)
E3		Check Room Temperature Sensor (TA)
E4		Check Evaporator Temperature Sensor (T2B)
E5		Check Evaporator Outlet Temperature Sensor (T2A)
E6		Check DC Fan Motor
E7		EEPROM Error (Data Storage)
E9		Communication Error Between Indoor Unit and Controller
Eb		EEV Error
Ed		Outdoor Unit Error
EE		Condensate Error
FE		No Address When Power ON For First Time
UU		MDC Error In Auto System-Check Mode

LEGEND
EEPROM — Electronically Erasable Programmable Read-only Memory
EEV — Electronic Expansion Valve
MDC — Multi-port Distribution Controller

Table 6 —Troubleshooting

ERROR	DESCRIPTION	POSSIBLE CAUSES	POSSIBLE SOLUTIONS
dd	Heating / Cooling Mode Conflict	System is in cooling or fan only mode and heating signal is received from a unit on the system.	All units should be in cooling mode for system to stay in cooling mode.
	System is in heating mode and cooling signal is received from a unit in the system.	System is in heating mode and cooling signal is received from a unit in the system.	All units should be in heating mode.
E1	Communication Error Between Indoor & Outdoor Unit	Signal wires are short-circuited or disconnected.	Check or reconnect signal wire.
		Signal wire close to electromagnetic source.	Distance signal wires from electromagnetic source.
		PC board fault.	Replace PC board
E2, E3, E4, E5	Check Temperature Sensor	Loose connection at port on PC board.	Tighten the connection at port on PC board.
		Sensor is short-circuited.	Using multi-meter, measure resistance of the sensor. If the resistance is ≤ 100 ohms, change the sensor.
		PC board fault.	Replace PC board.
E6	DC Fan Motor	Operating beyond limits.	Check and correct external static pressure on the unit.
		DC motor fault.	Replace DC motor.
		PC board fault.	Replace PC board.
E7	EEPROM Error (Data Storage)	Chip or PC board fault.	Replace PC board.
E9	Communication Error Between Indoor Unit and Controller	Signal wires are short-circuited or disconnected.	Check or reconnect signal wires.
		Signal wires close to electromagnetic source.	Distance signal wires from electromagnetic source.
		PC board fault.	Replace PC board
Eb	EEV Error	EEV wires are short-circuited or disconnected.	Replace EEV wires
		EEV Stop.	Replace EEV
		PC board fault.	Replace PC board
Ed	Outdoor Unit Error	Outdoor unit fault.	Refer to outdoor unit troubleshooting guide.
EE	Condensate Error	Loose connection or disconnected.	Tighten the connection or reconnect at port on PC board.
		Water level float is stuck.	Inspect the slope
		Trap slope is too steep.	Adjust the trap slope.
		Drain pipe is too long.	Adjust the length of drain pipe.
		Drain pump faulty.	Replace the drain pump.
FE	No Address When Power ON for first time	Indoor unit without address.	Run automatic addressing option at the outdoor unit.
			Use remote wireless or wired controller to re-address indoor unit.
UU	MDC Auto System-Check Mode	MDC fault.	Refer to MDC troubleshooting guide.

LEGEND
EEPROM — Electronically Erasable Programmable Read-only Memory
EEV — Electronic Expansion Valve
MDC — Multi-port Distribution Controller
PC — Process Controller

Replacement Parts —

Quote the unit model number and unit serial number when ordering replacement parts or contacting the factory about the unit. This information can be found on the serial plate attached to the unit shown in Fig. 39.

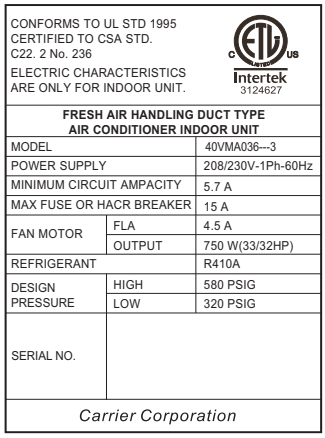
CONFORMS TO UL STD 1995
CERTIFIED TO CSA STD.
C22. 2 No. 236
ELECTRIC CHARACTERISTICS
ARE ONLY FOR INDOOR UNIT.

Intertek
3124627

FRESH AIR HANDLING DUCT TYPE
AIR CONDITIONER INDOOR UNIT

MODEL		40VMA036---3
POWER SUPPLY		208/230V-1Ph-60Hz
MINIMUM CIRCUIT AMPACITY		5.7 A
MAX FUSE OR HACR BREAKER		15 A
FAN MOTOR	FLA	4.5 A
	OUTPUT	750 W(33/32HP)
REFRIGERANT		R410A
DESIGN PRESSURE	HIGH	580 PSIG
	LOW	320 PSIG
SERIAL NO.		

Carrier Corporation

Fig. 39 —Unit Serial Plate (Example)

APPENDIX A - DIP SWITCH SETTINGS

There are two DIP switches on the main board. Figures A and B show the settings for each parameter controlled by a switch. Switches are shown in the default settings.

POSITION 1 — START-UP

OFF — Auto Addressing Mode (Default)
ON — Factory Test Mode

POSITION 2 — MODE

OFF — Normal Mode (default)
ON — Factory Self-Checking Mode

POSITION 3 — NOT USED

POSITION 4 — INDOOR UNIT IDENTIFICATION

OFF — Standard Indoor Unit (Default)
ON — Mode Priority Indoor Unit (HP only)
(IDU address must be 63)

Fig. A — SW1 Settings

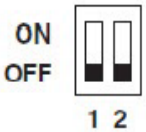

POSITION 1, 2 — Reserved

Fig. B —SW8 Settings

© Carrier Corporation 2020