45VML005-036---3
Sizes 07K-24K
Low Static Ducted Indoor Unit for Variable Refrigerant Flow (VRF)

Installation and Operations Manual

Table of Contents

ABOUT THIS DOCUMENT 1
OPERATIONS MANUAL 12
INSTALLATION MANUAL 15
DIMENSIONS 19
WIRING DIAGRAM 45
ERROR CODES 56
MAINTENANCE AND SERVICE 68
SERVICE 72

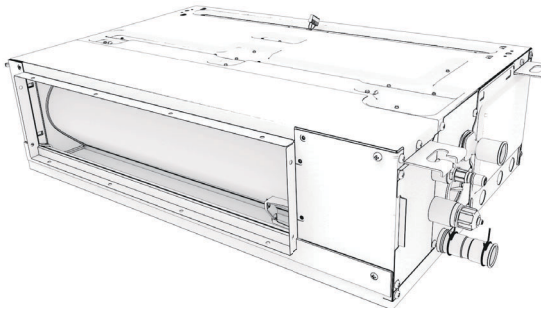

Fig. 1 —Low Static Ducted Indoor Unit

NOTE: The figures in this manual are for explanation purposes only. They may be slightly different from the unit you purchased (depending on the model). The actual shape shall prevail.

ABOUT THIS DOCUMENT

NOTE: Make sure that the user has the printed documentation and ask him/her to keep it for future reference.

Target audience

Authorized installers + end users

NOTE: This appliance is intended to be used by expert or trained users in shops, in light industry, and on farms, or for commercial and household use by lay persons.

⚠ WARNING

Thoroughly read and ensure that you fully understand the safety precautions (including the signs and symbols) in this manual, and follow relevant instructions during use to prevent damage to health or property.

Documentation set

This document is part of a documentation set. The complete set consists of:

- **General safety precautions:**
  - **Safety instructions that you must read before installing**
- **Indoor unit installation and operation manual:**
  - **Installation and operation instructions**
- **Repeater installation and operation manual:**
  - Installation and operation instructions
- **Controller installation and operation manual:**
  - Installation and operation instructions

Refer to the product manual for other accessories.

Technical engineering data

Latest revisions of the supplied documentation may be available via your dealer.

The original documentation is written in English. All other languages are translations.

If it is necessary to take precautions during installation of the appliance, appropriate details shall be given.

For appliances marked with different RATED VOLTAGES or different RATED FREQUENCIES (separated by a /), instructions shall be included to indicate to the user or installer what action must be taken to adjust the appliance for operation at the required RATED VOLTAGE or RATED FREQUENCY.

Compliance is checked by inspection.

If a STATIONARY APPLIANCE is not fitted with a SUPPLY CORD and a plug, or with other means for disconnection from the supply mains having a contact separation in all poles that provide full disconnection under over voltage category lll conditions, the instructions shall state that means for disconnection must be incorporated in the fixed wiring in accordance with the wiring rules.

Compliance is checked by inspection.

The instructions for BUILT-IN APPLIANCES shall include information with regard to the following:

- dimensions of the space to be provided for the appliance;
- dimensions and position of the means for supporting and fixing the appliance within this space;
- minimum distances between the various parts of the appliance and the surrounding structure;
- minimum dimensions of ventilating openings and their correct arrangement; connection of the appliance to the supply mains and the interconnection of any separate components;
- necessity to allow disconnection of the appliance from the supply after installation, unless the appliance incorporates a switch complying with 24.3. The disconnection may be achieved by having the plug accessible or by incorporating a switch in the fixed wiring in accordance with the wiring rules.

Compliance is checked by inspection.

For appliances with TYPE x ATTACHMENT having a specially prepared cord, the instructions shall contain the substance of the following:

If the SUPPLY CORD is damaged, it must be replaced by a special cord or assembly available from the manufacturer or its service agent.

For appliances with TYPE Y ATTACHMENT, the instructions shall contain the substance of the following.

If the SUPPLY CORD is damaged, it must be replaced by the manufacturer, its service agent or similarly qualified persons in order to avoid a hazard.

For appliances with TYPE Z ATTACHMENT, the instructions shall contain the substance of the following.

The SUPPLY CORD cannot be replaced. If the cord is damaged the appliance should be scrapped.

Compliance is checked by inspection.

If a NON-SELF-RESETTING THERMAL CUT-OUT is required in order to comply with the standard then the instructions for appliances incorporating a NON-SELF-RESETTING THERMAL CUT-OUT that is reset by disconnection of the supply mains shall contain the substance of the following:

CAUTION

In order to avoid a hazard due to inadvertent resetting of the THERMAL CUT-OUT, this appliance must not be supplied through an external switching device, such as a timer, or connected to a circuit that is regularly switched on and off by the utility.

Compliance is checked by inspection.

The instructions for FIXED APPLIANCES shall state how the appliance is to be fixed to its support. The method of fixing stated is not to depend on the use of adhesives since they are not considered to be are liable fixing means.

Compliance is checked by inspection.

SAFETY SIGNS

Explanation of Safety Signs

Thoroughly read and ensure that you fully understand the safety precautions (including the signs and symbols) in this manual, and follow relevant instructions during use to prevent damage to health or property.

Table 1 — Safety Signs

⚠ DANGER	indicates a hazardous situation which, if not avoided, will result in death or serious injury
⚠ WARNING	indicates a hazardous situation which, if not avoided, could result in death or serious injury
⚠ CAUTION	indicates a hazardous situation which, if not avoided, could result in minor or moderate injury
NOTICE	is used to address practices not related to physical injury
SAFETY INSTRUCTIONS	Safety instruction (or equivalent) signs indicate specific safety-related instructions or procedures

Table 2 — Symbols Displayed on Unit

WARNING - RISK OF FIRE DUE TO FLAMMABLE REFRIGERANT USED. FOLLOW HANDLING INSTRUCTIONS CAREFULLY IN COMPLIANCE WITH NATIONAL REGULATIONS. R-454B Refrigerant Safety Group A2L R-454B	WARNING	This symbol shows that this appliance used a flammable refrigerant. If the refrigerant is leaked and exposed to an external ignition source, there is a risk of fire.
	CAUTION	This symbol shows that the manual should be read carefully.
	CAUTION	This symbol shows that only a competent service personnel should be handling this equipment with reference to the technical manual.
	CAUTION	This symbol shows that information is available such as the operating manual or installation manual.

WARNING

- Do not use means to accelerate the defrosting process or to clean, other than those recommended by the manufacturer.
- The appliance shall be stored in a room without continuously operating ignition sources (for example: open flames, an operating gas appliance or an operating electric heater).
- Do not pierce or burn.
- Be aware that refrigerants might not contain an odor.

Competence of Service Personnel

WARNING

RISK OF FIRE. FLAMMABE REFRIGERANT USED

Installation, repair, maintenance, decommission and disposal Should Be Performed Only By Trained and Certified Service Personnel.

Information of procedures additional to usual information for refrigerating appliance installation, repair, maintenance and decommission procedures is required when an appliance with FLAMMABLE REFRIGERANTS is affected.

The training of these procedures is carried out by national training organizations or manufacturers that are accredited to teach the relevant national competency standards that may be set in legislation.

The achieved competence should be documented by a certificate.

Transportation, Marking and Storage for Units that Employ Flammable Refrigerants

Fig. 2 —A2L Warning

The unit employs FLAMMABLE REFRIGERANT R454B.

1. **GENERAL**
   The following information is provided for units that employ FLAMMABLE REFRIGERANTS.
2. **TRANSPORT**
   Attention is drawn to the fact that additional transportation regulations may exist with respect to equipment containing flammable gas. The maximum number of pieces of equipment or the configuration of the equipment permitted to be transported together will be determined by the applicable transport regulations.
3. **MARKING OF EQUIPMENT USING SIGNS**
   Signs for similar appliances used in a work area are generally addressed by local regulations and give the minimum requirements for the provision of safety and/or health signs for a work location.
   All required signs are to be maintained and employers should ensure that employees receive suitable and sufficient instruction and training on the meaning of appropriate safety signs and the actions that need to be taken in connection with these signs.
   The effectiveness of signs should not be diminished by too many signs being placed together.
   Any pictograms used should be as simple as possible and contain only essential details.
4. **DISPOSAL OF EQUIPMENT USING FLAMMABLE REFRIGERANTS**
   See national regulations.
5. **STORAGE OF EQUIPMENT**
   The storage of the equipment should be in accordance with the applicable regulations or instructions, whichever is more stringent.
6. **STORAGE OF PACKED (UNSOLD) EQUIPMENT**
   Storage package protection should be constructed in such a way that mechanical damage to the equipment inside the package will not cause a leak of the REFRIGERANT CHARGE.
   The maximum number of pieces of equipment permitted to be stored together will be determined by local regulations.

Safety Warnings

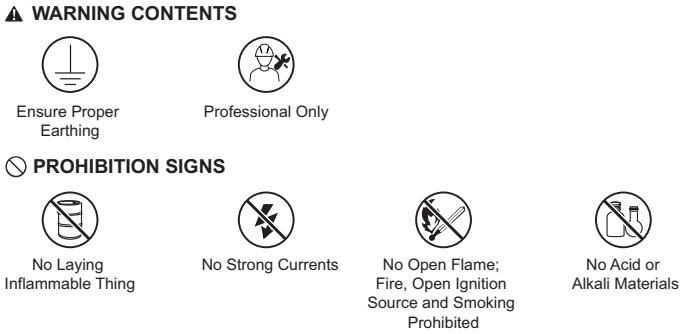

1. **SAFETY PRECAUTIONS**

DANGER

In the event of refrigerant leakage, smoking and open flames are prohibited. Disconnect the main power switch immediately, open windows to allow ventilation, keep away from the leakage point, and contact your local dealer or technical support to request a professional repair.

WARNING

Unit installation must comply with local standards and electrical codes, and relevant instructions in this manual.

The appliance shall be stored in a well-ventilated area where the room size corresponds to the room area as specified for operation.

The appliance shall be stored in a room without continuously operating open flames (for example an operating gas appliance) and ignition sources (for example an operating electric heater).

The appliance shall be stored so as to prevent mechanical damage from occurring.

Do not use any liquid cleanser, liquefied cleanser, or corrosive cleanser to wipe this unit or spray water or other liquids on the unit. Otherwise, the plastic parts of the unit will become damaged and an electrical shock may occur. Disconnect the main power switch before cleaning and maintenance to avoid accidents.

Ask a professional to remove and reinstall the unit.

Ask a professional for maintenance and repair assistance.

This unit is classified as an "appliance which is not accessible to the general public".

The indoor unit shall be placed at a height not accessible to children, at least 98-7/16 in (2.5 m) above the ground.

⚠ CAUTION

Cleaning and user maintenance shall not be made by children without supervision.

This appliance is intended to be used by expert or trained users in shops, in light industry and on farms, or for commercial use by lay persons.

When the product is used for commercial application. This appliance is intended to be used by expert or trained users in shops, in light industry and on farms, or for commercial use by lay persons.

The sound pressure level is below 70 dB(A).

LEAK DETECTION SYSTEM installed.Unit Must be powered except for service.

2. ELECTRIC SAFETY REQUIREMENTS

⚠ WARNING

The unit shall be installed according to the local wiring specifications.

Wiring work must be completed by qualified electricians.

The unit must be well grounded. Specifically, the main switch of the unit must have a reliable grounding cable.

Before contacting wiring devices, cut off all the power supplies.

The user MAY NOT disassemble or repair the unit. Doing so can be dangerous. In the event of a fault, immediately cut off the power and contact your local dealer or technical support.

A separate power supply that meets the rated parameter values must be provided for the unit.

The fixed wiring to which the unit is connected must be equipped with a power cut-off device that meets the wiring requirements.

The unit's circuit board (PCB) is designed with a fuse to provide overcurrent protection.

The specifications of the fuse are printed on the circuit board.

NOTE: For the units with R454B refrigerant, only the blast-proof ceramic fuse can be used.

⚠ CAUTION

Under no circumstances should the grounding wires of the power supply system be disconnected.

If the supply cord is damaged, it must be replaced by the manufacturer, its service agent or similarly qualified persons in order to avoid a hazard.

Do not use a damaged power supply cable and replace it if it is damaged.

When the air conditioner is used for the first time or is in a power-off state for a long time, it needs to be connected to the power supply and warmed up for at least 12 hours before use.

3. SAFETY PRECAUTIONS ABOUT THE APPLIANCES USING FLAMMABLE REFRIGERANT

⚠ WARNING

The following precautions should be complied with when installation, service, maintenance and repair, and decommissioning of appliances using flammable refrigerant.

General

This appliance employed A2L flammable refrigerant R454B.

Symbols

Refer to the previous section.

Installation

⚠ WARNING

Every working procedure that affects safety means shall only be carried out by competent personnel. Examples for such working procedures are:

–breaking into the refrigerating circuit;

–opening of sealed components;

–opening of ventilated enclosures.

1. General

WARNING

Pipe-work shall be in compliance with national and local codes and standards.

The pipe-work including piping material, pipe routing, and installation shall include protection from physical damage in operation and service, and be in compliance with national and local codes and standards, such as ASHRAE 15, ASHRAE 15.2, IAPMO Uniform Mechanical Code, ICC International Mechanical Code, or CSA B52. All field joints shall be accessible for inspection prior to being covered or enclosed;

After completion of field piping for split systems, the field pipework shall be pressure tested with an inert gas and then vacuum tested prior to refrigerant charging, according to the following requirements;

The minimum test pressure for the low side of the system shall be the low side design pressure and the minimum test pressure for the high side of the system shall be the high side design pressure, unless the high side of the system, cannot be isolated from the low side of the system in which case the entire system shall be pressure tested to the low side design pressure.

– field-made refrigerant joints indoors shall be tightness tested. The test method shall have a sensitivity of 5 grams per year of refrigerant or better under a pressure of at least 0,25 times the maximum allowable pressure. No leak shall be detected;

– taking into consideration the length and diameter of the connecting refrigerant piping, add refrigerant to complete the installation according to the information provided on the label for determining the required additional refrigerant charge, as well as the instructions in this manual on how to complete the refrigerant charge.

The minimum INSTALLED HEIGHT hinst shall comply with the corresponding requirements in this manual.

Protection devices, piping and fittings shall be protected as far as possible against adverse environmental effects, for example the danger of water collecting and freezing in relief pipes or the accumulation of dirt and debris;

Provision shall be made for expansion and contraction of long runs of piping;

WARNING

This appliance contains FLAMMABLE REFRIGERANTS, the minimum floor area of the room shall comply with the requirements in the " Required Minimum Room Area" table within this manual;

A REFRIGERANT DETECTION SYSTEMS is installed. The unit must be powered except for service.

REFRIGERANT SENSORS for REFRIGERANT DETECTION SYSTEMS Shall Only be replaced with sensors specified by the appliance manufacture.

The detailed information on the following topics is included in the manual:

- function, operation and required servicing measures;
- specified end-of-life and replacement instructions;
- other information about REFRIGERANT DETECTION SYSTEMS.

2. Unventilated Areas

The appliance contains more than m1 for any refrigerating circuit, an unventilated area where the appliance using FLAMMABLE REFRIGERANTS is installed shall be so constructed that should any refrigerant leak, it will not stagnate so as to create a fire or explosion hazard.

SAFETY INSTRUCTIONS

False ceilings or drop ceilings may be used as a return air plenum if a REFRIGERANT DETECTION SYSTEM is provided in the appliance and any external connections are also provided with a sensor immediately below the return air plenum duct joint.

Information on Servicing

1. General

CAUTION

Servicing shall be performed only Be Performed Only By Trained and Certified Service Personnel.

2. Checks to the Area

Prior to beginning work on systems containing flammable refrigerants, safety checks are necessary to ensure that the risk of ignition is minimized. For repair to the refrigerating system, Clause “Work procedure” to Clause “No ignition sources” shall be completed prior to conducting work on the system.

3. Work Procedure

Work shall be undertaken under a controlled procedure so as to minimize the risk of a flammable gas or vapor being present while the work is being performed.

4. General Work Area

All maintenance staff and others working in the local area shall be instructed on the nature of work being carried out. Work in confined spaces shall be avoided.

The area around the workspace shall be sectioned off. Ensure that the conditions within the area have been made safe by control of flammable material.

5. Checking for Presence of Refrigerant

The area shall be checked with an appropriate refrigerant detector prior to and during work, to ensure the technician is aware of potentially toxic or flammable atmospheres. Ensure that the leak detection equipment being used is suitable for use with all applicable refrigerants, i.e. non-sparking, adequately sealed or intrinsically safe.

6. Presence of Fire Extinguisher

If any hot work is to be conducted on the refrigerating equipment or any associated parts, appropriate fire extinguishing equipment shall be available to hand. Have a dry powder or CO2 fire extinguisher adjacent to the charging area.

7. No Ignition Source

No person carrying out work in relation to a refrigerating system which involves exposing any pipe work shall use any sources of ignition in such a manner that it can lead to the risk of fire or explosion. All possible ignition sources, including cigarette smoking, should be kept sufficiently far away from the site of installation, repairing, removing and disposal, during which refrigerant can possibly be released to the surrounding space. Prior to work taking place, the area around the equipment is to be surveyed to make sure that there are no flammable hazards or ignition risks. "No Smoking" signs shall be displayed.

8. **Ventilated Area**

   Ensure that the area is in the open or that it is adequately ventilated before breaking into the system or conducting any hot work. A degree of ventilation shall continue during the period that the work is carried out. The ventilation should safely disperse any released refrigerant and preferably expel it externally into the atmosphere.

9. **Checks to the Refrigerating Equipment**

   Where electrical components are being changed, they shall be fit for the purpose and to the correct specification. At all times the manufacturer's maintenance and service guidelines shall be followed. If in doubt, consult the manufacturer's technical department for assistance.

   The following checks shall be applied to installations using flammable refrigerants:

   – the refrigerant charge is in accordance with the room size within which the refrigerant containing parts are installed;
   – the ventilation machinery and outlets are operating adequately and are not obstructed;
   – if an indirect refrigerating circuit is being used, the secondary circuit shall be checked for the presence of refrigerant;
   – marking to the equipment continues to be visible and legible. Markings and signs that are illegible shall be corrected;
   – refrigerating pipe or components are installed in a position where they are unlikely to be exposed to any substance which can corrode refrigerant containing components, unless the components are constructed of materials which are inherently resistant to being corroded or are suitably protected against being so corroded.

10. **Checks to the Electrical Devices**

   Repair and maintenance to electrical components shall include initial safety checks and component inspection procedures. If a fault exists that could compromise safety, then no electrical supply shall be connected to the circuit until it is satisfactorily dealt with. If the fault cannot be corrected immediately but it is necessary to continue operation, an adequate temporary solution shall be used. This shall be reported to the owner of the equipment so all parties are advised.

   Initial safety checks shall include:

   – that capacitors are discharged: this shall be done in a safe manner to avoid possibility of sparking;
   – that no live electrical components and wiring are exposed while charging, recovering or purging the system;
   – that there is continuity of ground bonding.

Repairs to Sealed Components and Intrinsically Safe Components

⚠ WARNING

Sealed electrical components shall be replaced.

Repair to Intrinsically Safe Components

⚠ WARNING

Intrinsically safe components must be replaced.

Cabling

Check that cabling will not be subject to wear, corrosion, excessive pressure, vibration, sharp edges or any other adverse environmental effects. The check shall also take into account the effects of aging or continual vibration from sources such as compressors or fans.

Detection of Flammable Refrigerants

Under no circumstances shall potential sources of ignition be used in the searching for or detection of refrigerant leaks. A halide torch (or any other detector using a naked flame) shall not be used.

The following leak detection methods are deemed acceptable for all refrigerant systems.

Electronic leak detectors may be used to detect refrigerant leaks but, in the case of flammable refrigerants, the sensitivity can be inadequate, or can need re-calibration. (Detection equipment shall be calibrated in a refrigerant-free area.) Ensure that the detector is not a potential source of ignition and is suitable for the refrigerant used. Leak detection equipment shall be set at a percentage of the LFL of the refrigerant and shall be calibrated to the refrigerant employed, and the appropriate percentage of gas (25% maximum) is confirmed.

Leak detection fluids are also suitable for use with most refrigerants but the use of detergents containing chlorine shall be avoided as the chlorine can react with the refrigerant and corrode the copper pipe-work.

NOTE: Examples of leak detection methods are:

- **bubble method,**
- **fluorescent agent method.**

If a leak is suspected, all naked flames shall be removed/extinguished.

If a leakage of refrigerant is found which requires brazing, all of the refrigerant shall be recovered from the system, or isolated (by means of shut-off valves) in a part of the system remote from the leak. Removal of refrigerant shall be according to Clause "Refrigerant removal and circuit evacuation."

Refrigerant Removal and Circuit Evacuation

⚠ CAUTION

Oxygen free nitrogen (OFN) shall then be purged through the system both before and during the brazing process.

When breaking into the refrigerant circuit to make repairs - or for any other purpose - conventional procedures shall be used. However, for flammable refrigerants it is important that best practice be followed, since flammability is a consideration. The following procedure shall be followed:

- safely remove refrigerant following local and national regulations;
- evacuate;
- purge the circuit with inert gas (optional for A2L);
- evacuate (optional for A2L);
- continuously flush with inert gas when using flame to open circuit;
- open the circuit.

The refrigerant charge shall be recovered into the correct recovery cylinders if venting is not allowed by local and national codes. For appliances containing flammable refrigerants, the system shall be purged with oxygen-free nitrogen to render the appliance safe for flammable refrigerants. This process might need to be repeated several times. Compressed air or oxygen shall not be used for purging refrigerant systems.

For appliances containing flammable refrigerants, refrigerants purging shall be achieved by breaking the vacuum in the system with oxygen-free nitrogen and continuing to fill until the working pressure is achieved, then venting to atmosphere, and finally pulling down to a vacuum (optional for A2L). This process shall be repeated until no refrigerant is within the system (optional for A2L). When the final oxygen-free nitrogen charge is used, the system shall be vented down to atmospheric pressure to enable work to take place.

The outlet for the vacuum pump shall not be close to any potential ignition sources, and ventilation shall be available.

⚠ CAUTION

An inert gas, specifically, is dry oxygen free nitrogen (OFN).

The system shall be flushed with OFN to render the unit safe. This process may need to be repeated several times.

⚠ CAUTION

This operation is absolutely vital if brazing operations on the pipework are to take place.

Charging Procedures

In addition to conventional charging procedures, the following requirements shall be followed:

- Ensure that contamination of different refrigerants does not occur when using charging equipment. Hoses or lines shall be as short as possible to minimize the amount of refrigerant contained in them.
- Cylinders shall be kept in an appropriate position according to the instructions.
- Ensure that the refrigerating system is grounded prior to charging the system with refrigerant.
- Label the system when charging is complete (if not already labeled).
- Extreme care shall be taken not to overfill the refrigerating system.

Prior to recharging the system, it shall be pressure-tested with the appropriate purging gas. The system shall be leak-tested on completion of charging but prior to commissioning. A follow up leak test shall be carried out prior to leaving the site.

Decommissioning

Before carrying out this procedure, it is essential that the technician is completely familiar with the equipment and all its detail. It is recommended good practice that all refrigerants are recovered safely. Prior to the task being carried out, an oil and refrigerant sample shall be taken in case analysis is required prior to re-use of recovered refrigerant. It is essential that electrical power is available before the task is commenced.

a. Become familiar with the equipment and its operation.
b. Isolate system electrically.
c. Before attempting the procedure, ensure that:
   – mechanical handling equipment is available, if required, for handling refrigerant cylinders;
   – all personal protective equipment is available and being used correctly;
   – the recovery process is supervised at all times by a competent person;
   – recovery equipment and cylinders conform to the appropriate standards.
d. Pump down refrigerant system, if possible.
e. If a vacuum is not possible, make a manifold so that refrigerant can be removed from various parts of the system.
f. Make sure that the cylinder is situated on the scales before recovery takes place.
g. Start the recovery machine and operate in accordance with instructions.
h. Do not overfill cylinders (no more than 80 % volume liquid charge).
i. Do not exceed the maximum working pressure of the cylinder, even temporarily.
j. When the cylinders have been filled correctly and the process completed, make sure that the cylinders and the equipment are removed from site promptly and all isolation valves on the equipment are closed off.
k. Recovered refrigerant shall not be charged into another refrigerating system unless it has been cleaned and checked.

Labeling

Equipment shall be labeled stating that it has been de-commissioned and emptied of refrigerant. The label shall be dated and signed. For appliances containing flammable refrigerants, ensure that there are labels on the equipment stating the equipment contains flammable refrigerant.

Recovery

When removing refrigerant from a system, either for servicing or decommissioning, it is required to follow good practice so that all refrigerants are removed safely.

When transferring refrigerant into cylinders, ensure that only appropriate refrigerant recovery cylinders are employed. Ensure that the correct number of cylinders for holding the total system charge is available. All cylinders to be used are designated for the recovered refrigerant and labeled for that refrigerant (i.e. special cylinders for the recovery of refrigerant). Cylinders shall be complete with pressure-relief valve and associated shut-off valves in good working order. Empty recovery cylinders are evacuated and, if possible, cooled before recovery occurs.

The recovery equipment shall be in good working order with a set of instructions concerning the equipment that is at hand and shall be suitable for the recovery of the flammable refrigerant. If in doubt, the manufacturer should be consulted. In addition, a set of calibrated weighing scales shall be available and in good working order. Hoses shall be complete with leak-free disconnect couplings and in good condition.

The recovered refrigerant shall be processed according to local legislation in the correct recovery cylinder, and the relevant waste transfer note arranged. Do not mix refrigerants in recovery units and especially not in cylinders.

If compressors or compressor oils are to be removed, ensure that they have been evacuated to an acceptable level to make certain that flammable refrigerant does not remain within the lubricant. The compressor body shall not be heated by an open flame or other ignition sources to accelerate this process. When oil is drained from a system, it shall be carried out safely.

Refrigerant Charge Amount and Room Area Limitations

In UL/CSA 60335-2-40, R454B refrigerant is classified as class A2L, which is mildly flammable. Therefore, R454B refrigerant is suitable for systems needing additional refrigerant charge and which will limit the area of the rooms being served by the system.

Similarly, the total amount of refrigerant in the system shall be less than or equal to the allowable maximum refrigerant charge. The allowable maximum refrigerant charge depends on the area of the rooms being served by the system.

NOTES:

The nouns in this section are explained as follows:

Mc: The actual refrigerant charge in the system.

A: The actual room area where the appliance is installed.

Amin: The required minimum room area.

Mmax: The allowable maximum refrigerant charge in a room.

Qmin: The minimum circulation airflow.

Anvmin: The minimum opening area for connected rooms.

TAmin: The total area of the conditioned space (For appliances serving one or more rooms with an air duct system).

TA: The total area of the conditioned space connected by air ducts.

h0 : h0 is the release height, the vertical distance from the floor to the point of release when the appliance is installed.

mREL: refrigerant releaseable charge in oz/kg, used for Refrigerant shut-off device.

Qmin: minimum CIRCULATION AIR FLOW circulated to the total conditioned space.

WARNING

The space considered shall be any space which contains refrigerant-containing parts or into which refrigerant could be released.

The room area (A) of the smallest, enclosed, occupied space shall be used in the determination of the refrigerant quantity limits.

The Room Area Calculation Requirements

For determination of room area (A) when used to calculate the refrigerant charge limit, the following shall apply.

The room area (A) shall be defined as the room area enclosed by the projection to the base of the walls, partitions and doors of the space in which the appliance is installed.

Spaces connected by only drop ceilings, ductwork, or similar connections shall not be considered a single space.

Units mounted higher than 70-55/64 inches and spaces divided by partition walls that are no higher than 62-63/64 inches shall be considered a single space. Rooms on the same floor and connected by an open passageway between the spaces can be considered a single room when determining compliance to Amin, if the passageway complies with all of the following.

1. It is a permanent opening.
2. It extends to the floor.
3. It is intended for people to walk through

The area of the connected rooms, on the same floor, connected by permanent opening in the walls and/or doors between occupied spaces, including gaps between the wall and the floor, can be considered a single room when determining compliance to Amin, provided all of the following conditions are met as shown in Fig 3.

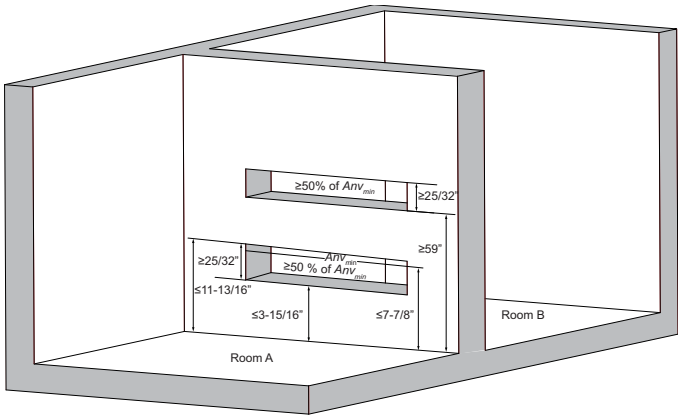

Fig. 3 —Opening Conditions for Connected Rooms

1. **Low Level Opening**
   a. The opening shall not be less than Anvmin which is 0.012 m²(0.13 ft²) for enhanced tightness refrigerating systems.
   b. The area of any openings above 11-13/16 inches from the floor shall not be considered in determining compliance with Anvmin.
   c. At least 50 % of the opening area of Anvmin shall be below 7-7/8 inches from the floor.
   d. The bottom of the opening is not more than 3-15/16 inches from the floor.
   e. The opening is a permanent opening that cannot be closed.
   f. For openings extending to the floor the height shall not be less than 25/32 inches above the surface of the floor covering.
2. **High Level Opening**
   a. The opening shall not be less than 50 % of Anvmin .
   b. The opening is a permanent opening that cannot be closed.
   c. The opening shall be at least 59 inches above the floor.
   d. The height of the opening is not less than 25/32 inches.

3. Room Size Requirement

The room into which refrigerant can leak, plus the connected adjacent room(s) shall have a total area not less than A. A is shown in Table 3.

Our units meet the requirements for enhanced tightness refrigerating systems using A2L refrigerants.

The minimum room area of operating or storage should be as specified in the following table:

The allowed maximum refrigerant charge: Determine the maximum refrigerant limit for the system based on the area and height of the room where the indoor unit is installed. First, determine the area A and effective height Hr of each room where the indoor unit is installed, then refer to the table below to find the maximum allowable system refrigerant amount for each room.

For example, a system with one outdoor unit and three indoor units: Indoor unit A is installed in a room with an area of 13.9 m²(150 ft²) and a height of 2.8 m(9.2 ft), indoor unit B is installed in a room with an area of 10.7 m²(115 ft²) and a height of 2.2 m(7.2 ft), and indoor unit C is installed in a room with an area of 9.3 m²(100 ft²) and a height of 2.2 m(7.2 ft). Referring to the table below, the maximum allowable refrigerant amount for the room with indoor unit A is 5.14 kg(11.36 lb), for the room with indoor unit B is 3.32 kg(7.33 lb), and for the room with indoor unit C is 3.02 kg(6.66 lb). Therefore, the maximum allowable refrigerant amount for the system is 3.02 kg(6.66 lb). [mmax=min(mA,mB,mC)]

The allowable maximum refrigerant charge for R454B indoor unit are listed in the following table.

Table 3 — Allowable Maximum Refrigerant Charge

A/TA		m_{max}											
		H_r=a		H_r=b		H_r=c		H_r=d		H_r=e		H_r=f	
m²	ft²	kg	lb	kg	lb	kg	lb	kg	lb	kg	lb	kg	lb
0.9	10	0.5	1.2	0.4	0.9	0.3	0.7	0.3	0.6	0.2	0.6	0.2	0.5
1.9	20	1.0	2.4	0.8	1.8	0.6	1.5	0.6	1.3	0.5	1.2	0.4	1.0
2.8	30	1.6	3.6	1.2	2.7	1.0	2.2	0.9	2.0	0.8	1.8	0.7	1.6
3.7	40	2.1	4.8	1.6	3.6	1.3	3.0	1.2	2.6	1.0	2.4	0.9	2.1
4.6	50	2.7	6.0	2.0	4.5	1.7	3.7	1.5	3.3	1.3	3.0	1.2	2.7
5.6	60	3.2	7.2	2.4	5.4	2.0	4.5	1.8	4.0	1.6	3.6	1.4	3.2
6.5	70	3.8	8.4	2.8	6.3	2.4	5.3	2.1	4.6	1.9	4.2	1.7	3.8
7.4	80	4.3	9.7	3.2	7.2	2.7	6.0	2.4	5.3	2.1	4.8	1.9	4.3
8.4	90	4.9	10.9	3.7	8.1	3.0	6.8	2.7	6.0	2.4	5.4	2.2	4.9
9.3	100	5.4	12.1	4.1	9.0	3.4	7.5	3.0	6.6	2.7	6.0	2.4	5.4
10.2	110	6.0	13.3	4.5	10.0	3.7	8.3	3.3	7.3	3.0	6.6	2.7	6.0
11.1	120	6.5	14.5	4.9	10.9	4.1	9.0	3.6	8.0	3.2	7.2	2.9	6.5
12.1	130	7.1	15.7	5.3	11.8	4.4	9.8	3.9	8.6	3.5	7.8	3.2	7.0
13.0	140	7.6	16.9	5.7	12.7	4.8	10.6	4.2	9.3	3.8	8.4	3.4	7.6
13.9	150	8.2	18.1	6.1	13.6	5.1	11.3	4.5	10.0	4.1	9.0	3.7	8.1
14.9	160	8.7	19.4	6.5	14.5	5.4	12.1	4.8	10.6	4.3	9.7	3.9	8.7
15.8	170	9.3	20.6	7.0	15.4	5.8	12.8	5.1	11.3	4.6	10.3	4.2	9.2
16.7	180	9.8	21.8	7.4	16.3	6.1	13.6	5.4	12.0	4.9	10.9	4.4	9.8
17.7	190	10.4	23.0	7.8	17.2	6.5	14.3	5.7	12.6	5.2	11.5	4.7	10.3
18.6	200	10.9	24.2	8.2	18.1	6.8	15.1	6.0	13.3	5.4	12.1	4.9	10.9

Table 4 — Allowable Maximum Refrigerant Charge (Cont.)

A/TA		m_{max}											
		H_r=a		H_r=b		H_r=c		H_r=d		H_r=e		H_r=f	
m²	ft²	kg	lb	kg	lb	kg	lb	kg	lb	kg	lb	kg	lb
19.5	210	11.5	25.4	8.6	19.0	7.2	15.9	6.3	14.0	5.7	12.7	5.1	11.4
20.4	220	12.0	26.6	9.0	20.0	7.5	16.6	6.6	14.6	6.0	13.3	5.4	12.0
21.4	230	12.6	27.8	9.4	20.9	7.9	17.4	6.9	15.3	6.3	13.9	5.6	12.5
22.3	240	13.1	29.1	9.8	21.8	8.2	18.1	7.2	16.0	6.5	14.5	5.9	13.0
23.2	250	13.7	30.3	10.3	22.7	8.5	18.9	7.5	16.6	6.8	15.1	6.1	13.6
24.2	260	14.0	30.8	10.7	23.6	8.9	19.7	7.8	17.3	7.1	15.7	6.4	14.1
25.1	270	14.0	30.8	11.1	24.5	9.2	20.4	8.1	18.0	7.4	16.3	6.6	14.7
26.0	280	14.0	30.8	11.5	25.4	9.6	21.2	8.4	18.6	7.6	16.9	6.9	15.2
26.9	290	14.0	30.8	11.9	26.3	9.9	21.9	8.7	19.3	7.9	17.5	7.1	15.8
27.9	300	14.0	30.8	12.3	27.2	10.3	22.7	9.0	20.0	8.2	18.1	7.4	16.3
28.8	310	14.0	30.8	12.7	28.1	10.6	23.4	9.3	20.6	8.5	18.7	7.6	16.9
29.7	320	14.0	30.8	13.1	29.1	10.9	24.2	9.6	21.3	8.7	19.4	7.9	17.4
30.7	330	14.0	30.8	13.6	30.0	11.3	25.0	9.9	22.0	9.0	20.0	8.1	18.0
31.6	340	14.0	30.8	14.0	30.8	11.6	25.7	10.2	22.6	9.3	20.6	8.4	18.5
32.5	350	14.0	30.8	14.0	30.8	12.0	26.5	10.5	23.3	9.6	21.2	8.6	19.0
33.4	360	14.0	30.8	14.0	30.8	12.3	27.2	10.8	24.0	9.8	21.8	8.9	19.6
34.4	370	14.0	30.8	14.0	30.8	12.7	28.0	11.1	24.6	10.1	22.4	9.1	20.1
35.3	380	14.0	30.8	14.0	30.8	13.0	28.7	11.4	25.3	10.4	23.0	9.4	20.7
36.2	390	14.0	30.8	14.0	30.8	13.4	29.5	11.7	26.0	10.7	23.6	9.6	21.2
37.2	400	14.0	30.8	14.0	30.8	13.7	30.3	12.0	26.6	10.9	24.2	9.8	21.8
38.1	410	14.0	30.8	14.0	30.8	14.0	30.8	12.4	27.3	11.2	24.8	10.1	22.3
39.0	420	14.0	30.8	14.0	30.8	14.0	30.8	12.7	28.0	11.5	25.4	10.3	22.9
39.9	430	14.0	30.8	14.0	30.8	14.0	30.8	13.0	28.6	11.8	26.0	10.6	23.4
40.9	440	14.0	30.8	14.0	30.8	14.0	30.8	13.3	29.3	12.0	26.6	10.8	24.0
41.8	450	14.0	30.8	14.0	30.8	14.0	30.8	13.6	30.0	12.3	27.2	11.1	24.5
42.7	460	14.0	30.8	14.0	30.8	14.0	30.8	13.9	30.6	12.6	27.8	11.3	25.0
43.7	470	14.0	30.8	14.0	30.8	14.0	30.8	14.0	30.8	12.9	28.4	11.6	25.6
44.6	480	14.0	30.8	14.0	30.8	14.0	30.8	14.0	30.8	13.1	29.1	11.8	26.1
45.5	490	14.0	30.8	14.0	30.8	14.0	30.8	14.0	30.8	13.4	29.7	12.1	26.7
46.5	500	14.0	30.8	14.0	30.8	14.0	30.8	14.0	30.8	13.7	30.3	12.3	27.2
47.4	510	14.0	30.8	14.0	30.8	14.0	30.8	14.0	30.8	14.0	30.8	12.6	27.8
48.3	520	14.0	30.8	14.0	30.8	14.0	30.8	14.0	30.8	14.0	30.8	12.8	28.3
49.2	530	14.0	30.8	14.0	30.8	14.0	30.8	14.0	30.8	14.0	30.8	13.1	28.9
50.2	540	14.0	30.8	14.0	30.8	14.0	30.8	14.0	30.8	14.0	30.8	13.3	29.4
51.1	550	14.0	30.8	14.0	30.8	14.0	30.8	14.0	30.8	14.0	30.8	13.6	30.0

Manufacturer reserves the right to change, at any time, specifications and designs without notice and without obligations.

Table 5 — Allowable Maximum Refrigerant Charge (Cont.)

A/TA		m_{max}											
		H_r=a		H_r=b		H_r=c		H_r=d		H_r=e		H_r=f	
m²	ft²	kg	lb	kg	lb	kg	lb	kg	lb	kg	lb	kg	lb
52.0	560	14.0	30.8	14.0	30.8	14.0	30.8	14.0	30.8	14.0	30.8	13.8	30.5
53.0	570	14.0	30.8	14.0	30.8	14.0	30.8	14.0	30.8	14.0	30.8	14.0	30.8

a. The effective room height not less than 13.2 ft (4.0m).
b. The effective room height between 9.9 ft (3.0m) and 13.2 ft (4.0m).
c. The effective room height between 8.2 ft (2.5m) and 9.9 ft (3.0m).
d. The effective room height between 7.2 ft (2.2m) and 8.2 ft (2.5m).
e. The effective room height between 6.6 ft (2.0m) and 7.2 ft (2.2m).
f. The effective room height between 5.9 ft (1.8m) and 6.6 ft (2.0m).

4. The Minimum Circulation Airflow

For enhanced tightness refrigerating systems, the minimum circulation airflow is 240 m3/h.

NOTES:

The requirement for the second opening can be met by drop ceilings, ventilation ducts, or similar arrangements that provide an airflow path between the connected rooms.

The minimum opening for natural ventilation (Anvmin) in connected rooms is related to the room area (A), the actual refrigerant charge of refrigerant in the system (mc), and the allowable MAXIMUM REFRIGERANT CHARGE in the system (mmax), Anvmin can be determined.

OPERATIONS MANUAL

Operation Precautions

⚠ WARNING

If the unit will be not used for a long time, disconnect the main power switch. Otherwise, an accident may occur.

The installation height of the air conditioner shall be at least 98-7/16 in (2.5 m) above the ground to avoid the following risks:

1. Touching of moving or live parts, such as fans, motors, or louvers, by a non professional. Running parts may cause harm to you or transmission assemblies may become damaged.
2. Getting too close to the air conditioner may reduce the level of comfort.

Do not let children play with the air conditioner. Otherwise, an accident may occur.

Do not expose the indoor units or controller to moisture or water as this may cause short circuiting or fire.

Do not place any appliance that uses an open flame in the direct air supply of the air conditioner as it could interfere with the combustion of the appliance.

Do not use or store flammable gases or liquids such as natural gas, hair spray, paint or gasoline near the air conditioner. Otherwise, a fire may occur.

To avoid causing harm, do not place animals or plants directly in front of the air conditioner's air supply.

In the event of abnormal conditions such as abnormal noise, smell, smoke, temperature rise, and electric leakage, please cut off the power immediately, and then contact your local dealer or air conditioner customer service center. Do not repair the air conditioner by yourself.

Do not place flammable sprayers near the air conditioner or spray it directly at the air conditioner. Otherwise, a fire may occur.

Do not place a container of water on the air conditioner. If immersed in water, the air conditioner's electrical insulation will weaken, resulting in electrical shock.

After long-term use, confirm whether the installation platform has become worn. If it is worn, the unit could fall, causing injury.

Do not operate the switch with wet hands, as this may result in electric shock.

When servicing the air conditioner, be sure to turn off the air conditioner and cut off the power supply. Otherwise, the high-speed operation of the internal fan will cause injury.

Do not use fuses like iron or copper wire other than those with the specified capacity. Otherwise, a malfunction or fire may occur. The power supply must use the special circuit of the air conditioner at the rated voltage.

Do not place valuables under the air conditioner. Air conditioner condensation problems may damage the valuables.

When the air conditioner needs to be moved and re-installed, please entrust the local dealer or a professional technician to operate it.

⚠ CAUTION

Do not dispose of this product as unsorted municipal waste. Collection of such waste separately for special treatment is necessary.

Do not dispose of electrical appliances as unsorted municipal waste, use separate collection facilities. Contact your local government for information regarding the collection systems available.

If electrical appliances are disposed of in landfills or dumps, hazardous substances can leak into the groundwater and get into the food chain, damaging your health and well-being.

⚠ CAUTION

To use the unit normally, please follow the "Operation" section in this manual. Otherwise, the internal protection may be triggered, the unit may begin to drip, or the unit's cooling and heating effects may be impacted.

The room temperature should be set properly, especially when there are elderly, children, or patients in the room.

Lightning or the starting and stopping of large electrical equipment in nearby factories may cause misoperation of the unit. Turn off the main power switch for a few seconds, and then restart the unit.

To avoid accidental resetting of the thermal circuit breaker, the unit cannot be powered by an external switching device such as a timer or connected to a circuit that is turned on and off by a common component timer.

Check whether the air filter is installed properly. Confirm that the inlet and outlet ports of the indoor unit/outdoor unit are not blocked.

If the unit will not be used for a long time, clean the air filter before you start the unit. Otherwise, dust and mold on the filter could contaminate the air or produce an unpleasant odor. For more details, please refer to the section "Maintenance and Service."

When using the unit for the first time or replacing the filter, complete the following settings on the controller:

1. Reset the initial static pressure on the controller or perform a trial run on the outdoor unit (performed by the installer), and set the current state as a reference state for the unit to determine the filter state.
2. Set the difference between the initial resistance and the final resistance of the filter. (For details, see the wired controller manual.)

If the above operations are not performed, then the unit may not detect the state of the filter accurately.

2. OPTIMUM OPERATION

As cold air sinks and hot air rises, adjust the direction of louvers respectively in cooling and heating modes to ensure good cooling and heating effects.

In Cooling Mode

To improve the cooling effect in the room, adjust the air outlet louvers horizontally.

Fig. 4 —Cooling Mode

CAUTION

The downward direction of the louvers of the outlet grille during cooling operation may cause condensation on the air outlet and guide louvers surface.

In Heating Mode

To improve the heating effect in the lower parts of a room, adjust the louvers of air outlet grille downwards.

Fig. 5 —Heating Mode

Operating Range

Use the unit in the following temperature and humidity ranges for safe and effective operation.

Cooling	Indoor Temperature	61 °F to 90 °F (16 °C to 32 °C)
	Indoor Humidity	≤ 80% (When the humidity exceeds 80%, long-time operation of the indoor unit may cause dew condensation on the surface of the indoor unit, generate mist-like cold air from the air outlet or water dripping out of the unit.)
Heating	Indoor Temperature	59 °F to 86 °F (15 °C to 30 °C)

NOTE: If it exceeds this operating range, safety devices may be put in action and the unit may not operate.

3. SYMPTOMS THAT ARE NOT FAULTS

NOTE: During operation, the following phenomena are normal and do not require maintenance.

Table 6 — Normal Protection of the Unit

Protection	When the power switch is on, the unit starts 3 minutes to 5 minutes after it is turned ON again in case it was turned off just before.
Anti-cold air protection (Heat pump type)	In heating mode (including heating in automatic mode), when the indoor heat exchanger does not reach a certain temperature, the indoor fan temporarily shuts off, or runs in Low mode until the heat exchanger heats up to prevent the blowing of cold air.
Defrosting (Heat pump type)	When the outdoor temperature is low and the humidity is high, the outdoor unit's heat exchanger may become frosted, which may reduce the heating capacity of the unit. If this occurs, the unit will stop heating, enter automatic defrosting mode, and return to heating mode after defrosting has been completed. During the defrosting, the outdoor fan stops running and the indoor fan runs using the anti-cold air protection function. The defrosting operation time varies depending on the outdoor temperature and the degree of frosting. It generally takes 2 to 10 minutes. During the defrosting process, the outdoor unit may emit steam due to the rapid defrosting, which is normal.

The following phenomena are normal during operation of the unit. They can be solved according to the instructions below or do not need to be solved.

Table 7 — Symptoms that are not System Malfunctions

SYMPTOM	EXPLANATION
The indoor unit emits white mist	1. When humidity is high during cooling mode, white mist may appear due to the humidity and the temperature difference between the air inlet and outlet. 2. When the unit is switched to heating mode after defrosting, the indoor unit discharges the moisture generated from defrosting as steam.
The indoor unit blows dust	When filter is very dirty, dust may enter the indoor unit and be blown out.
The indoor unit emits odor	The indoor unit absorbs the odors of rooms, furniture or cigarettes, etc., and disperses the odors during operation. It is advised to have the unit cleaned and maintained regularly by professional technicians.
Water drips	When the indoor humidity is high, condensation and water may drip out of the unit.
Noise of Indoor unit	1. A continuous low "hissing" sound is heard when the system is in "Auto", "Cool", "Dry", and "Heat" modes. This is the sound of refrigerant gas flowing through both indoor and outdoor units. 2. A "hissing" sound is heard at the start or immediately after stopping operation or defrost operation. This is the noise of refrigerant caused by flow change. 3. A "zeen" sound is heard immediately after the power supply is turned on. The electronic expansion valve inside an indoor unit starts working and makes the noise. it will reduce in about one minute. 4. A continuous low "shah" sound is heard when the system is in cooling mode, dry mode or at a stop. When the drain pump (optional accessories) is in operation, this noise is heard. 5. A "pishi-pishi" squeaking sound is heard when the system stops after heating operation. Expansion and contraction of plastic parts caused by temperature change make this noise. 6. A low "sah", "choro-choro" sound is heard while the indoor unit is stopped. When another indoor unit is in operation, this noise is heard. In order to prevent oil and refrigerant from remaining in the system, a small amount of refrigerant is kept flowing.
Switching from cooling/heating (not available for cooling only units) mode to fan only mode	When the indoor unit reaches the set temperature, the unit controller automatically stops the compressor operation and switches to the fan only mode. When the room temperature rises (in cooling mode) or falls (in heating mode) to a certain level, the compressor is restarted and cooling or heating operation is resumed.
In winter, the outdoor temperature is low, and heating effects may be decreased	1. In heating mode, the air-conditioning system absorbs heat from the outdoor air and releases heat to the indoor side. When the outdoor temperature is low, less heat is released. This is the principle of heat pump. 2. When the outdoor temperature is extremely low, the heating capacity of the unit decreases, and other heating equipment may need to be added.
Mode conflict	All indoor units in the same refrigerant system can only operate in the same mode, such as cooling, heating or other modes. Setting to a different mode will make conflict and the system will stop. Make sure all indoor units are running in the same mode.
No heating or cooling permissions	For the same air conditioning system, if outdoor unit operates in changeover mode, the wired controller of VIP indoor unit allows users to select modes supported by the indoor units, while the wired controllers of other indoor units displays the icon of "No permission". In this case, other indoor units can only operate in the same mode as the VIP indoor unit.

4. DISPLAY BOX

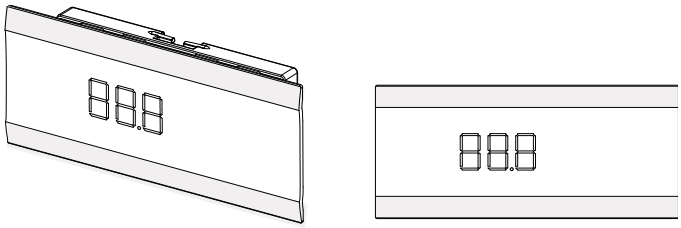

Fig. 6 —Display Box

Display functions:

1. In Standby mode, the main interface displays "---".
2. When starting up in Cooling or Heating mode, the main interface displays the set temperature. In Fan mode, the main interface displays the indoor temperature. In Dry mode, the main interface displays the set temperature, and when the humidity* is set, the set humidity value is displayed on the wired controller.
3. The light display on the main interface can be turned on or off through the light button on the remote controller.
4. When the system fails or runs in a special mode, the main interface displays the error code or the operating status codes. For details, see the section "Error Codes and definitions".

NOTES:

Humidity*: The humidity control functions is customized.

Some display functions are available only for certain indoor unit and outdoor unit models, wired controllers, and display panels. For more information, please consult your local dealer or technical support.

5. DISPOSAL

Components and accessories from the units are not part of ordinary domestic waste.

Complete units, compressors, motors etc. are only to be disposed of via qualified disposal specialists.

This unit uses hydrofluorocarbon which is only be disposed of via qualified disposal specialists.

INSTALLATION MANUAL

INSTALLATION PRECAUTIONS

⚠ WARNING

Make sure to carry out the installation according to local legislation.

Ask your local dealer or professionals to install the product.

This unit must be installed by qualified persons. Users MAY NOT install the unit themselves; otherwise, faulty operations may cause the risks of fire, electrical shock, injury, or leakage, which could harm you or others or damage the unit.

Never modify or repair the unit on your own.

Otherwise, a fire, electric shock, injury or water leakage may occur. Get your local dealer or a professional to do so.

Make sure that the residual current device is installed.

The residual current device must be installed. Failure to install it may result in electric shock.

When powering the unit, follow the regulations of the local electric companies.

Make sure that the unit is grounded reliably in accordance with laws. If the grounding is not completed correctly, it may cause electrical shock.

When moving, disassembling or reinstalling the unit**, get the assistance of your local dealer or a professional.**

If installed improperly, fire, electrical shock, injury, or water leakage may occur.

Use the optional accessories specified by local dealer.

The installation of these accessories must be carried out by professionals. Improper installation may cause fire, electrical shock, water leakage and other hazards.

Use only power supply cable and communication cables that meet specification requirements. Properly connect all the wiring to make sure that no external forces are acting on the terminal blocks, power supply cable and communication cables. Improper wiring or installation may cause a fire.

The unit must be grounded. Check whether the ground line is securely connected or broken. Do not connect the ground line to gas cans, water piping, lightning rods or telephone grounding lines.

The main power switch of the unit should be put in a position that is out of the reach of children.

It should not be obstructed by flammable objects such as curtains.

Open flames are prohibited when refrigerant leaks are present.

If the unit is not cooling/heating properly, this may be caused by a refrigerant leak. If this occurs, contact your local dealer or a professional. The refrigerant in the unit is safe, and usually does not leak.

If there is refrigerant leakage in the room, it is easy for a fire to occur after contact with the heating units of the heater/electric stove/stove. Please disconnect the power supply of the unit, extinguish the flames of appliances that produce a flame, and open the windows and doors of the room to allow ventilation and ensure that the concentration of refrigerant leakage in the room does not exceed a critical level; keep away from the leakage point, and contact the dealer or professional personnel.

After the refrigerant leakage is repaired, do not start the product until the maintenance personnel confirms that the leakage is well repaired.

Before and after installation, exposing the unit to water or moisture will cause electrical short circuit.

Do not store the unit in a humid basement or expose it to rain or water.

Make sure the installation base and lifting are robust and reliable;

Insecure installation of the base may cause the unit to fall, leading to an accident. Take into full consideration the effects of strong winds, typhoons and earthquakes, and reinforce the installation.

Check whether the drain pipe can drain the water smoothly.

Improper installation of the pipeline may lead to water leakage, damaging furniture, electric appliances, and the carpet.

After installation, check whether the refrigerant is leaking.

Do not install the product in a location where there is a danger of flammable gas leaks.

In the event of leakage of combustible gas, the combustible gas surrounding the indoor unit may cause a fire.

Install air filter of 30-80 mesh/inch at the return air grille to filter dust in the air and keep air diffuser clean and free from dirt blockage.

CAUTION

Keep the indoor unit, outdoor unit, power supply cable, and connecting wires at least 1 m(39-3/8 in) away from the high-power radio equipment, to prevent electromagnetic interference and noise. For some electromagnetic waves, it is not enough to prevent noise even at a distance of more than 1 m(39-3/8 in).

In a room equipped with fluorescent lamps (rectifier type or fast start type), the signal transmission distance of the remote controller (wireless) may not reach the predetermined value. Install the indoor unit as far away from the fluorescent lamp as possible.

Do not touch the fins of the heat exchanger, as this could cause injury.

For safety, please dispose of the packing materials properly.

Nails and other packaging materials may cause personal injury or other risks. Tear up the plastic packaging bag and dispose of it properly to prevent children from playing with it, leading to suffocation.

Do not cut off the power supply immediately after the indoor unit stops running.

Some parts of the indoor unit like the valve body and water pump are still in operation. Wait for at least 5 minutes before cutting off the power supply. Otherwise, water leakage and other faults may occur.

If the length and direction of the air inlet/outlet panel or connecting duct have been changed, complete the following settings on the controller before use the air conditioner again: (For details, see the Application Control section).

Reset the initial static pressure on the controller or perform a trial run on the outdoor unit (performed by the installer), and set the current state as a reference state for the unit to determine the filter status.

If the above operations are not performed, then the unit may not detect the state of the filter accurately.

For evaporating units and condensing units, the instructions or markings shall include a wording to assure that the maximum operating pressure is considered when connecting to any condenser unit or evaporator unit.

For evaporating units, condensing units and condenser units, instructions or markings shall include refrigerant charging instructions.

A warning to assure that partial units shall only be connected to an appliance suitable for the same refrigerant.

This unit is a partial unit air conditioner, complying with partial unit requirements of this International Standard, and must only be connected to other units that are confirmed as complying to corresponding partial unit requirements of this International Standard.

The electrical interfaces shall be specified with purpose, voltage, current, and safety class of construction.

The SELV connection points, if provided, are to be clearly indicated in the instructions.

The connection point should be marked with the “read the instructions” symbol per ISO 7000-0790 (2004-01) and the Class III symbol according to IEC 60417-5180 (2003-02).

For R454B Refrigerant only.

This unit is equipped with a refrigerant leak detector for safety. To be effective, the unit must be electrically powered at all times after installation, other than when servicing.

If any supplemental unit is employed to detect leaked refrigerant, such unit shall also apply this marking or be accompanied by such instructions.

PRECAUTIONS FOR TRANSPORTING AND LIFTING THE UNIT

1. Before transporting the unit, determine the path that will be used to move it to the installation site.
2. Do not unpack the unit until it is transported to the installation site.
3. When unpacking and moving the unit, must hold the Lifting Lugs and do not apply force to other parts, especially the refrigerant piping, drain pipe and plastic accessories, so as to avoid damaging the unit and causing personal injury.
4. Before installing the unit, make sure that the refrigerant specified on the nameplate is being used

⚠ WARNING

DO NOT Install Unit in the Following Locations

A place filled with mineral oil, fumes or mist, like a kitchen. Plastic parts will age and the heat exchanger will become dirty, eventually causing the unit performance to deteriorate or leak water.

Connecting pipes and copper welds will be corroded, resulting in refrigerant leakage.

A place where there are corrosive gases, such as acid or alkaline gases. Connecting pipes and copper welds will be corroded, resulting in refrigerant leakage.

A place exposed to combustible gases and using volatile combustible gases such as diluent or gasoline.

The electronics in the unit may cause the surrounding gas to ignite.

A place where there is equipment emitting electromagnetic radiation. The control system will fail and the unit will not function properly.

A place where there is a high salt content in the air like a coastal area.

Do not use the unit in an environment where an explosion may occur.

The unit cannot be installed on moving vehicles such as truck and ship.

Factories with major voltage fluctuations in the power supplies.

Other special environmental conditions.

⚠ CAUTION

Units of this series are designed to provide comfort. Do not install the unit in mechanical rooms and rooms with precision instruments, food, plants, animals, or artwork.

Avoid installation in an environment with a lot of organic compounds such as ink and siloxane.

Total refrigerant charge in the system cannot exceed requirements for minimum room size of the smallest one that is served.

NOTE:

Wooden buildings, newly renovated houses, and frequent use of disinfectants may contain acidic components in the air, such as formic acid, acetic acid, and hypochlorous acid, which can corrode copper pipes and solder joints, leading to refrigerant leaks.

Factories, chemical plants, livestock farms, vegetable markets, sewage pits, and other environment may contain sulfides, acid gases such as sulfur dioxide, ammonia, and chlorides in the air, which can corrode copper pipes and solder joints, leading to refrigerant leaks.

Contact a dealer for assistance.

Recommended Installation Sites

It is recommended to install the unit according to the design drawing of the HVAC engineer. The selection principle for the installation site is as follows:

- Ensure that the airflow in and out of the indoor unit is reasonably organized to form an air circulation in the room.
- Prevent the unit from blowing directly at the human body.
- Keep the air-conditioning return air away from direct exposure to the sun in the room.
- The indoor unit should not be lifted in the places like load-bearing beams and columns that affect the structural safety of the house.
- The wired controller and the indoor unit should be in the same installation space, otherwise, the sampling point setting of the wired controller needs to be changed.

Choose a site that fully complies with the following conditions and user requirements to install the air conditioning unit:

- There is enough space for installation and maintenance.
- Airflow in/out of the unit is not obstructed.
- It is easy to supply airflow to every corner of the room.
- It is easy to drain for water drain piping.
- There is no direct heat radiation.
- Avoid installation in narrow spaces or where there are more stringent noise requirements.
- Install the indoor unit at a place 98-7/16 in (2.5 m) above the ground.
- The length of the piping between the indoor and outdoor units is within the permitted range. Refer to the Installation and Operation Manual attached with the outdoor unit.

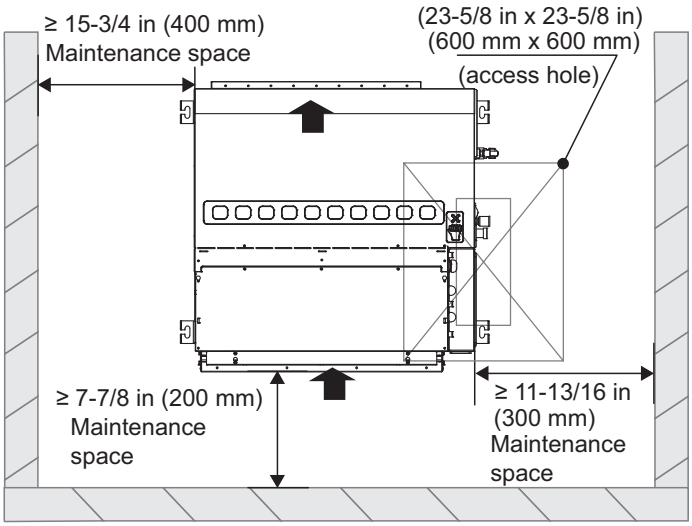

Fig. 7 —Unit Installation

NOTE: In case of conditions in the ceiling exceed 86 °F (30 °C) and relative humidity of 80%, or when fresh air is inducted into the ceiling, the additional insulation is required (minimum 3/8 in (10 mm) thickness polyethylene foam).

LAYOUT

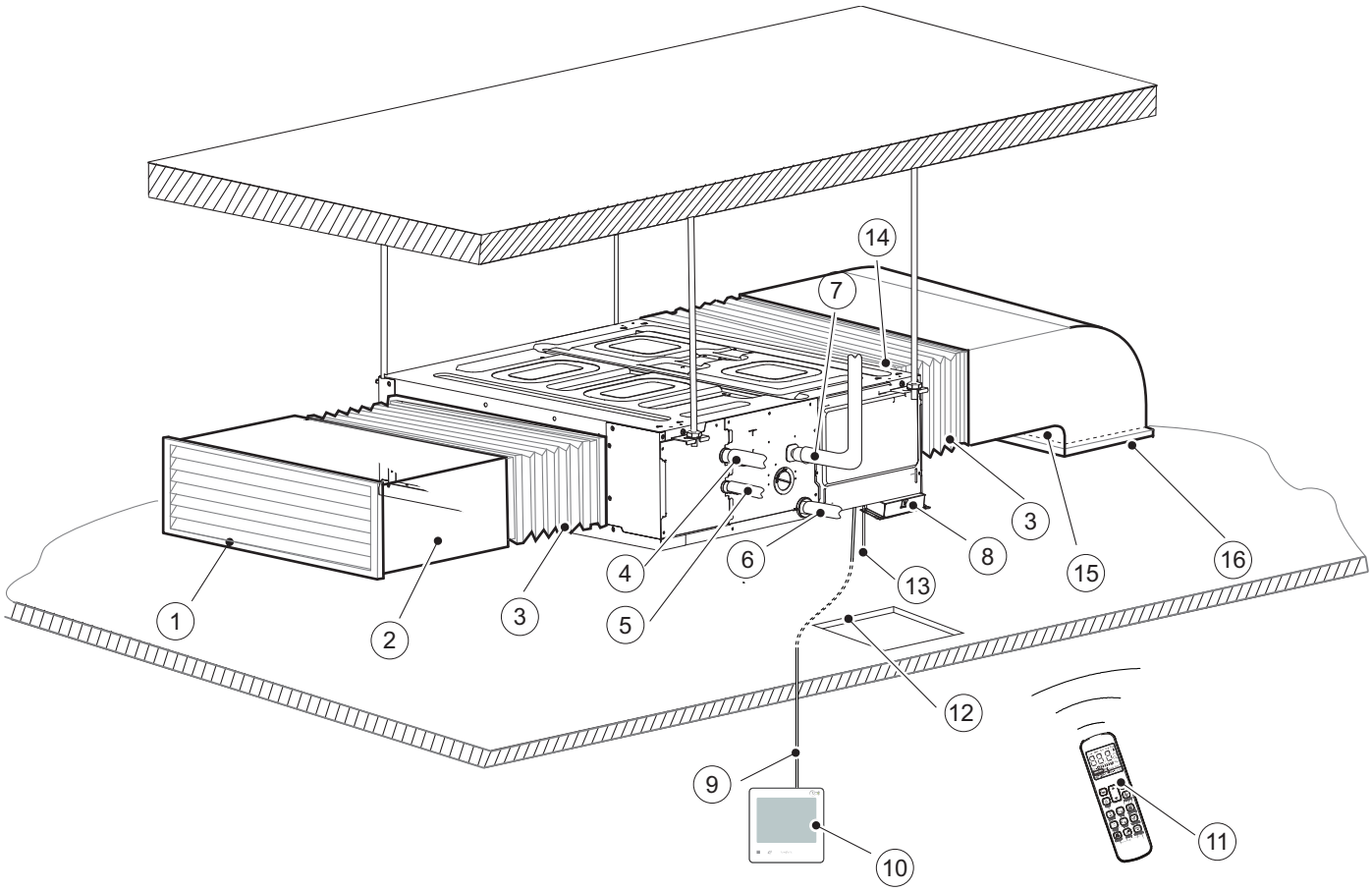

① *Air outlet grille	② *Air outlet duct	③ *Soft flexible duct
④ Gas pipe	⑤ Liquid pipe	⑥ Drain pipes for models without a water pump
⑦ Drain pipes for models with a water pump	⑧ Display box	⑨ *Connection wires
⑩ Wired controller (optional)	⑪ Remote controller (optional)	⑫ Access hole
⑬ *Power supply cable and earth wires	⑭ Air filter	⑮ *Air inlet duct
⑯ *Air inlet grille		

* To be purchased separately on site.

Fig. 8 —Installation Layout

NOTES:

- **All the optional accessories should be from local dealer.**
- **For optional accessories such as wired controllers, please refer to the manuals of these accessories.**
- **All the figures in the manual explain only the general appearance and functions of the product. The appearance and functions of the purchased product may not be completely consistent with those listed in the figures. Refer to the actual product.**

DIMENSIONS

Unit: mm(in)

External dimension, air outlet size, and size of fresh air outlet:

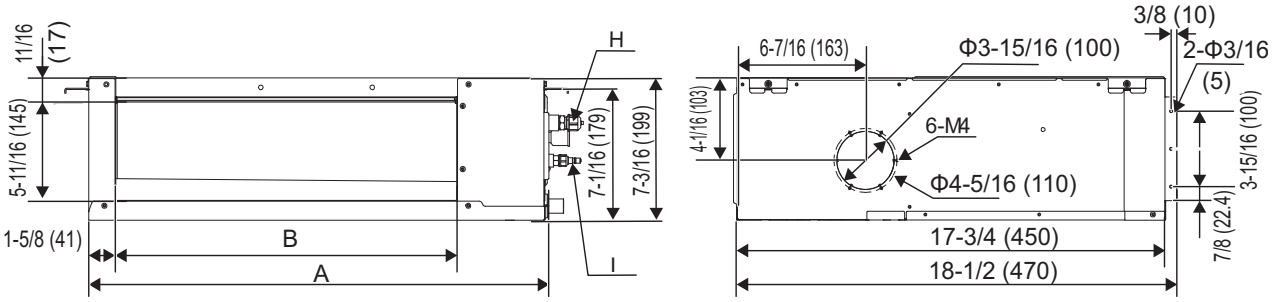

Size of return air inlet (back return air mode):

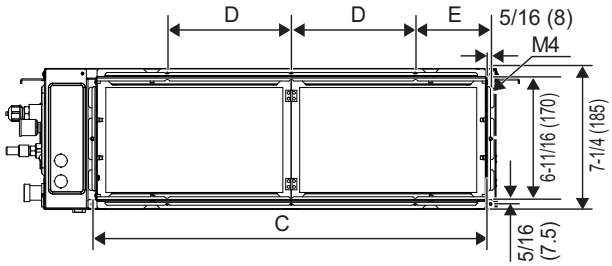

Dimension of pipe and water pipe:

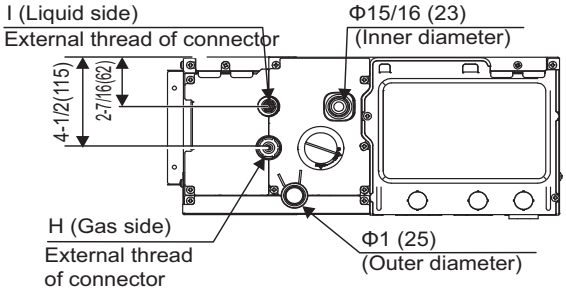

Size of return air inlet (bottom return air mode), and the distance between the lugs:

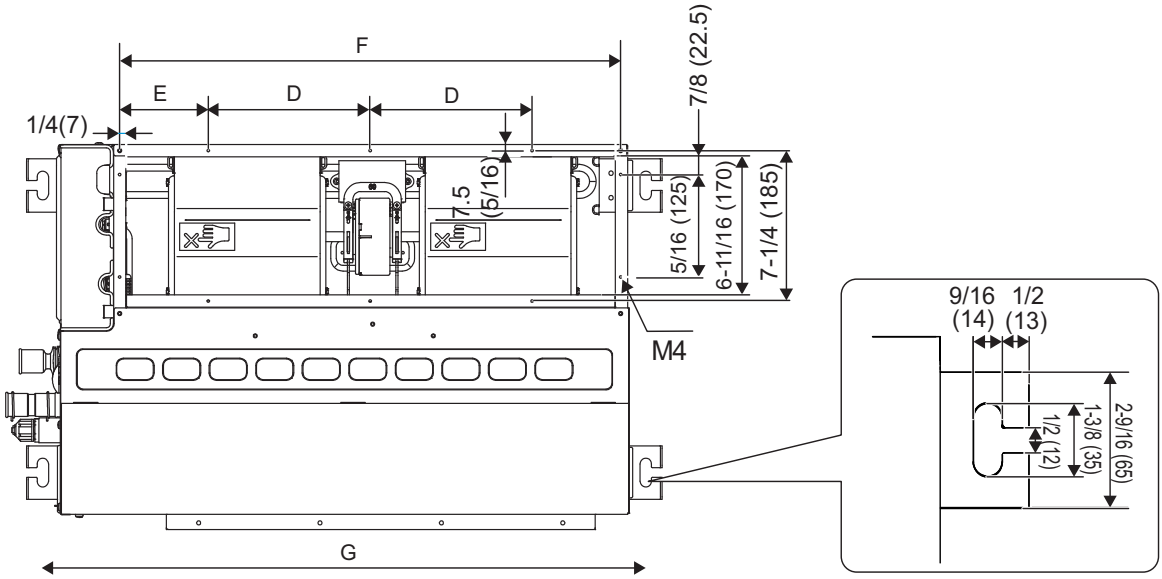

Fig. 9 —Dimensions

CAPACITY (kBtu/h)	A	B	C	D	E	F	G	H	I
kBtu/h ≤ 7	21-5/8 (550)	14-15/16 (380)	17-5/16 (455)	9-13/16 (250)	4-5/16 (109.5)	18-7/16 (469)	23-7/16 (595)	3/4-16 UNF	7/16-20 UNF
7 < kBtu/h ≤ 12	27-9/16 (700)	20-7/8 (530)	23-13/16 (605)	8-7/8 (200)	4-5/16 (109.5)	24-3/8 (619)	29-5/16 (745)	3/4-16 UNF	7/16-20 UNF
12 < kBtu/h ≤ 18	35-7/16 (900)	28-3/4 (730)	31-11/16 (805)	8-7/8 (200)	4-5/16 (109.5)	32-1/4 (819)	37-3/16 (945)	3/4-16 UNF	7/16-20 UNF
18 < kBtu/h ≤ 24	43/5/16 (1100)	36-5/8 (930)	39-9/16 (1005)	8-7/8 (200)	4-5/16 (109.5)	40-1/8 (1019)	45-1/16 (1145)	7/8-14 UNF	5/8-18 UNF
24 < kBtu/h ≤ 36	63 (1600)	55-1/8 (1400)	59-1/4 (1505)	8-7/8 (200)	6-1/4 (159.5)	59-13/16 (1519)	64-3/4 (1645)	7/8-14 UNF	5/8-18 UNF

Manufacturer reserves the right to change, at any time, specifications and designs without notice and without obligations.

2. INSTALLATION MATERIALS

Accessories

Table 8 — List of Accessories

Installation and operation manual x 1 (Make sure to hand it over to the user)	Flare nut x 2 For use in the installation of connecting pipe (the quantity is one for models with a process pipe)	Display Box X 1	Cable tie x 4 To tighten the drain hose tightly to the drainage outlet and PVC piping of the indoor unit.	Thermal insulation pipe x 2 Used for insulation and anti-condensation at pipe connections.	Protective Nut X 2

NOTE:

When installing the insulation pipe on site, cut it according to the actual needs. (Either method (a) or (b) is OK. Method (c) is incorrect. There must be no gap between the insulation pipe and connecting pipe.)

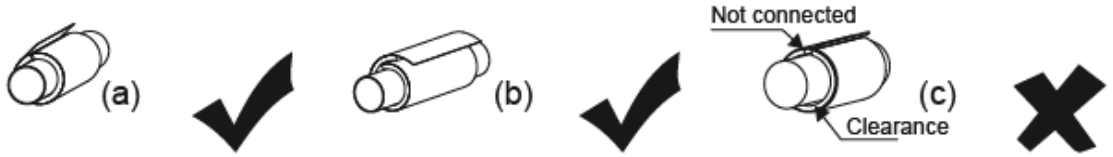

Fig. 10 —Accessories List

Check the accessory kit for the above items and contact your local dealer for any missing items.

Do not throw away any accessories that may be required for installation until the installation is complete.

Customers are free to choose to buy wired controllers, remote controllers (with a seven-speed wind controller) and other optional accessories.

Table 9 — Locally Purchased Accessories

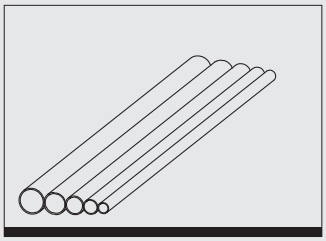

Connecting pipe [Unit: in (mm)]		
Capacity(kBtu/h) \ Piping	Liquid side	Gas side
kBtu/h ≤ 18	Φ 1/4 (6.35) × 0.75	Φ 1/2 (12.7) × 0.75
18 ＜ kBtu/h ≤ 48	Φ 3/8 (9.52) × 0.75	Φ 5/8 (15.9) × 1.0
Remarks	For connection of the indoor unit refrigerant system, it is recommended to use a soft connecting pipe (T2M), with the length selected according to the actual situation.	

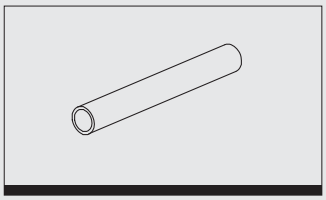

PVC water drain pipe

This is used as the indoor unit's drain pipe, 1in (25mm) diameter. The length is determined according to actual needs.

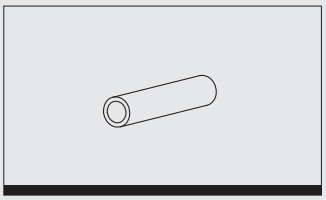

Thermal insulation pipe

The thickness of the insulation pipe for the connecting pipe is usually 9/16in (15mm) or above; and the thickness of the insulation pipe for the rigid polyethylene plastic tube is usually 3/8in (10mm) above. If the pipe is used in a closed humid area, the thickness should be increased.

Fig. 11 —Locally Purchased Accessories

NOTE: The materials necessary for onsite installation of the connecting pipe, drain pipe, lifting screw, various fasteners (pipeline bracket, Victaulic connector, screw, etc.), power supply cable, signal line, etc. need to be purchased by the installer. The materials and specifications must comply with the corresponding local or industrial standards.

Table 10 — Insulation Material Requirements

Connecting Pipe Insulation	The insulation work should only be carried out after the successful completion of the air tight test. Use polyethylene foam as insulation material, fire rating class is B1 and heat resistance is over 248°F (120°C). Thickness of the insulation pipe: 1. When the pipe diameter is equal to or greater than 5/8 in (15.9 mm), the insulation thickness is at least 13/16 in (20 mm). 2. When the pipe diameter is equal to or smaller than 1/2 in (12.7 mm), the insulation thickness is at least 9/16 in (15 mm). In cold climates, for heating application, the insulation thickness of outdoor refrigerant pipe is at least 1-9/16 in (40 mm), the insulation thickness of indoor refrigerant pipe is at least 13/16 in (20mm). Use glue to seal the jointed areas of thermal insulation pipes, and then wrap them with electrical tape with a width of not less than 2 in (50 mm) to ensure the connection is sealed. Make sure the insulation between the refrigerant pipes and the Indoor unit are entire to prevent the condensation.
Air Duct Insulation	The insulation of the air duct shall be carried out after the air leakage test of the air duct system has passed. Use glass wool or polyethylene form materials for thermal insulation. Make sure the insulation of air duct isentire to prevent the condensation. Wrap the outlet-side flange and the duct connection area with aluminum tape or something similar to prevent airescaping. The supports, suspension brackets, and brackets of the air duct shall be arranged outside the insulation layer with protective pad. Insulation thickness of glass wool: 1. The insulation thickness of air duct shall not be less than 1-9/16 in (40 mm) in rooms without air conditioning. 2. The insulation thickness of air duct shall not be less than 1 in (25 mm) in rooms with air conditioning. 3. If the insulation layer is made of other materials, the thickness of the insulation shall be obtained according to design requirements or calculations.
Drain Pipe Insulation	After the drainage test shows that there are no leaks, carry out the insulation of the drain piping. Drain pipe connection hole shall be insulated to prevent condensation. Drain piping passing indoors shall be insulated to prevent condensation, and insulation sleeves should be thicker than 3/8 in (10mm). Use glue to seal the jointed areas of thermal insulation pipes. The head of the metal clamp should be at the top, and metal clamp should be well insulated.

NOTE: The materials and specifications of insulation materials must meet national or industry standards.

3. PREPARATIONS BEFORE INSTALLATION

Unpacking Check

1. After unpacking, check whether the packing materials are in good condition, whether the accessories that come with the product are complete, whether the unit is intact, whether the surfaces of the heat exchanger and other parts are not worn, and whether there are oil stains on the stop valves of the unit.
2. Check the two sealing nuts of the refrigerant pipe, and observe whether the red dot on the surface of the sealing nut of the gas pipe bulges. If it bulges, the refrigerant system is well sealed; if it retracts, it is leaking, and need to contact local dealer.

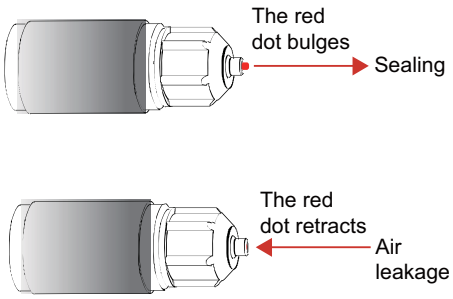

Fig. 12 —Sealing Nuts

3. Check the model before installation.
4. After indoor unit and outdoor unit inspection, pack them with plastic bags to avoid intake of foreign matters.

Take Out the Package Inside the Fan Casing

NOTICE

Before lifting the unit, always check the air outlet and air return plenum to ensure that the package and accessory package are taken out. Note that some models contain packaging material inside the fan casing. Follow the steps below to remove it.

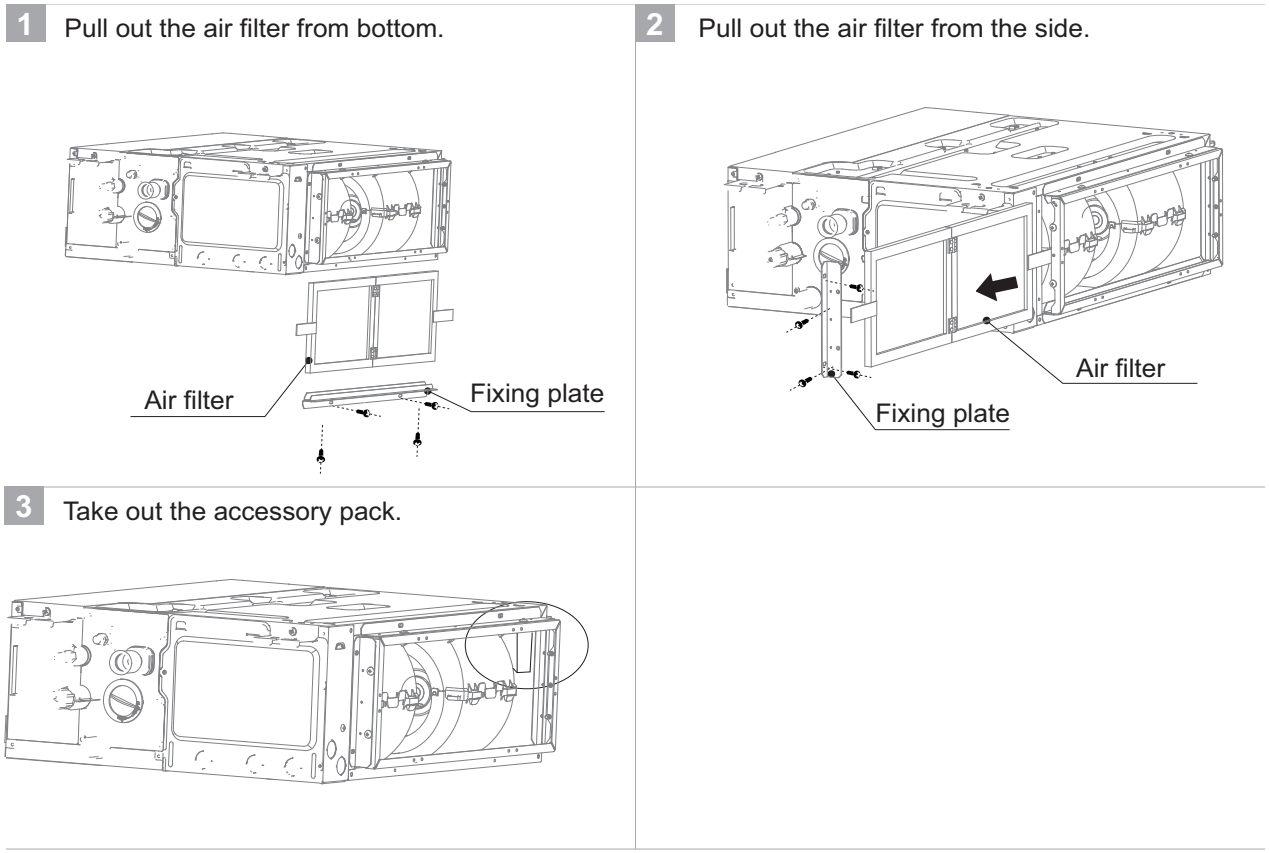

Fig. 13 —Remove Package Inside Fan Casing

Indoor Unit Positioning

Determine the positions of the air conditioning unit and suspension bolts.

1. Determine the air outlet/return mode and the suspension position of the indoor unit according to the design drawing.
2. Draw lines to locate the drilling positions of the bolts according to the three-dimensional drawing of the unit.
3. Make an access hole at the electric control box side [recommended size: 23-5/8 in × 23-5/8 in (600 mm × 600 mm).
4. For ease of disassembly of the motor, the rear end of the indoor unit shall be at least 7-7/8 in (200 mm) away from the wall.
5. There shall be no obstacle within 7-7/8 in (200 mm) of the return air inlet.
6. It is suggested to use an infrared ray locater for line drawing.

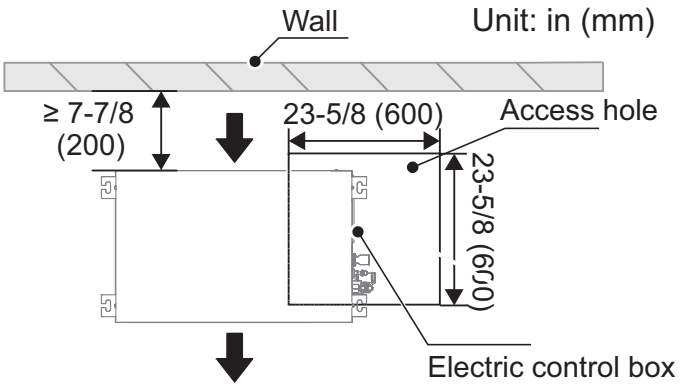

Fig. 14 —Positioning the Unit (Top View)

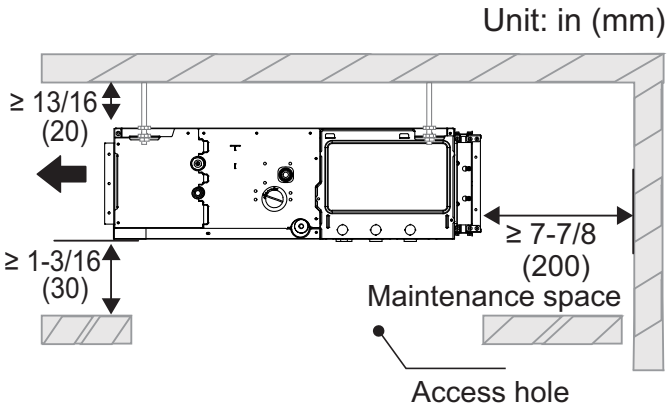

Fig. 15 —Positioning the Unit (Side View)

Site Adjustment of Air Return

There are two air return modes for this series of models.

- One is the back air return which is the factory default.
- The other is the bottom air return, which can be customized or adjusted on-site. Refer to the following two figures on the adjustment method.

1. Remove the return air flange assembly.

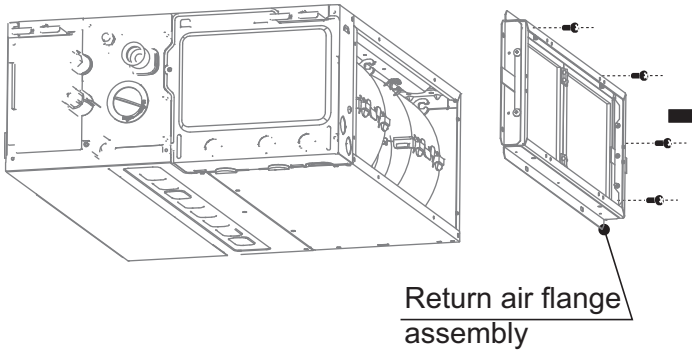

Fig. 16 —Remove Return Air Flange Assembly

2. Remove the back cover plate assembly.

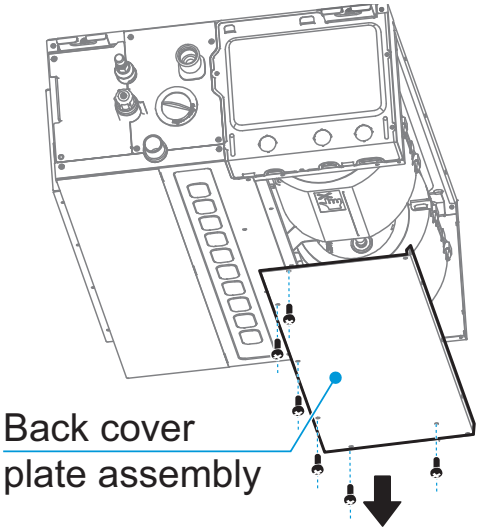

Fig. 17 —Remove Back Cover Plate Assembly

3. Install back cover plate assembly.

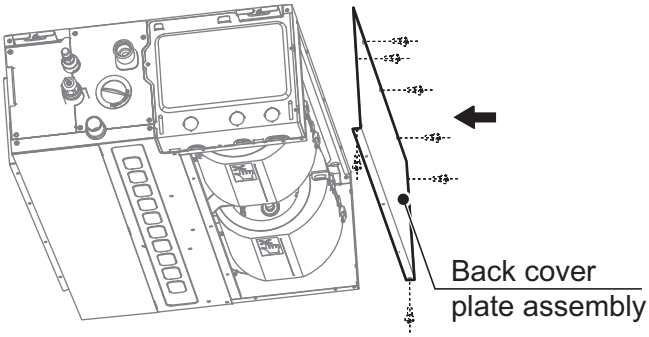

Fig. 18 —Install Back Cover Plate Assembly

4. Install return air flange assembly.

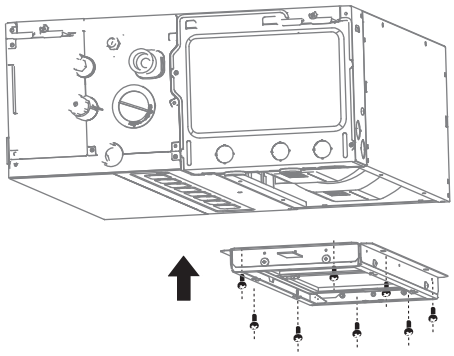

Fig. 19 —Install Return Air Flange Assembly

4. INDOOR UNT INSTALLATION

WARNING

Install the unit in a location with sufficient strength to support the weight of the unit. Take reinforcement measures when necessary.

Ensure that appliance is mounted securely.

The unit may fall and cause personal injury if the location is not strong enough.

Unstable installation may cause the unit to fall and cause an accident.

Before wiring/piping layout, make sure that the installation area (walls and floor) is safe and free of water, power, gas, and other hidden dangers.

Installation of Suspension Bolts

1. Using a pencil, mark the positions on the ceiling where the suspension bolts need to be fixed based on the distance between the four hanging holes on the indoor unit. After drilling the holes, install 4 anchors bolts and fasten them, using turnbuckle nuts connecting or welding 4 suspension bolts (φ3/8 in (10 mm)) with fully threaded bolt that is 19-5/16 in (490 mm) long to the 4 anchors bolts, and attach three nuts to the each suspension bolt, divide the nuts into two groups, with one nut on top as one group and two nuts at the bottom as another group, then install the indoor unit through the four lugs and nuts.
2. The diameter of the suspension bolt shall not be less than 3/8 in (10 mm).
3. When the length of the hanger rod exceeds 59-1/16 in (1.5 m), it is necessary to add two diagonal support rods to enhance stability.
4. Because the ceilings and other architectural structures vary, it is necessary to discuss building details with the owner.
   a. Ceiling treatment: Reinforce the ceiling joist to make sure that the ceiling is level and to prevent ceiling vibrations.
   b. Cut off and dismantle the ceiling joist.
   c. Reinforce the remaining surface after the ceiling is removed. Add further reinforcements to the joist on two ends of the ceiling.
   d. Once the main unit has been lifted and mounted, carry out the piping and wiring tasks within the ceiling. Determine the outlet direction of the piping after the installation site has been finalized.

For sites where the ceiling is already available, first connect and put in position the refrigerant piping, water drain pipe, and connecting wires of the indoor unit and wired controller before hoist and mount the unit.

CAUTION

High-quality carbon steel bolts (galvanized or with other anti-rust paint applied) or stainless steel bolts are used.

How the ceiling is treated will differ with the type of building. For specific measures, please consult the building and renovation engineers.

How the suspension bolt is secured varies according to the specific situation, and it must be secure and reliable.

Refer to Fig. 20 on installation using the suspension bolts.

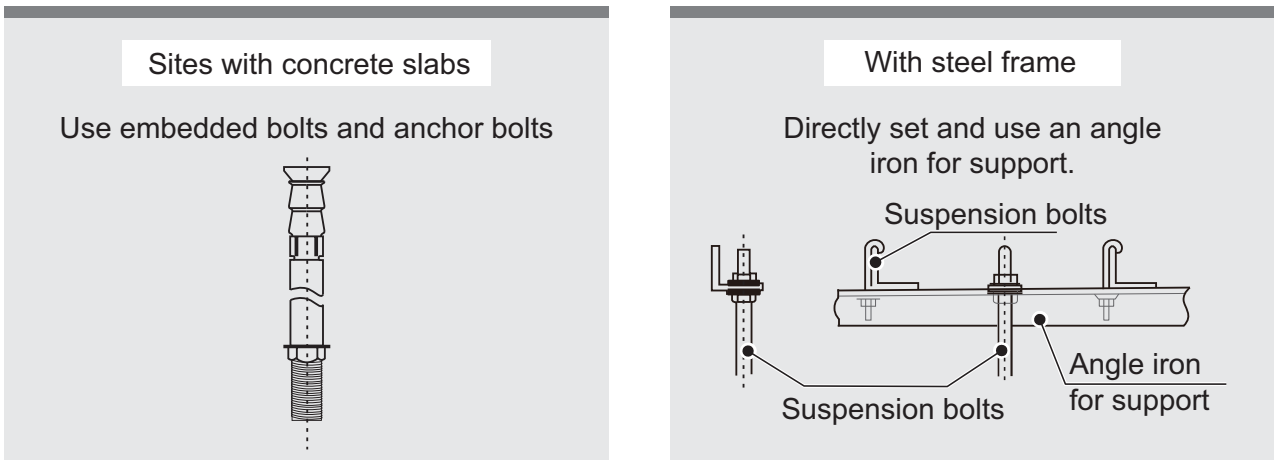

Fig. 20 —Installation Using Suspension Bolts

Indoor Unit Installation

‘

CAUTION

The indoor unit must not be too close to the ceiling. It shall be installed level or at an angle within 1° towards the drainage side. For units without a drain pump, ensure a slope of 1/100 towards the drainage side. Do not tilt towards the non-drainage side. Otherwise, water cannot drain smoothly and leaks can easily occur.

Keep the indoor unit free from dust or foreign particles. Use the plastic bags provided with the product to cover the unit.

1. Adjust the positions of the nuts. The size of the gap between the washer (bottom) and the ceiling should be based on the actual environment where the unit is being installed. The distance h between the lifting lug and the bottom of the suspension bolt shall be kept within the range of 1-9/16 in (40 mm) to 3-1/8 in (80 mm), so as to facilitate the pipe connection and assembly and disassembly of the electrical box cover.

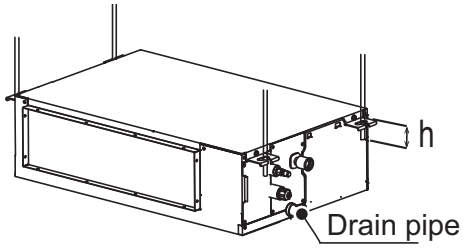

Fig. 21 —Facilitate Pipe Connection and Assembly/Disassembly of Electrical Box Cover

2. Slot the suspension bolts in the oblong holes of the lifting lugs. Secure the top and bottom of lugs with washers and nuts.

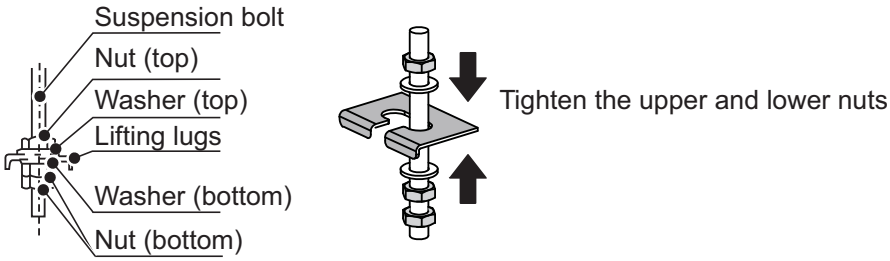

Fig. 22 —Secure Top and Bottom of Lugs with Washers and Nuts

3. Keep the unit level. Use a transparent hose to observe the water level (principle of communicating vessels) and verify the levelness of the unit in the depth direction.

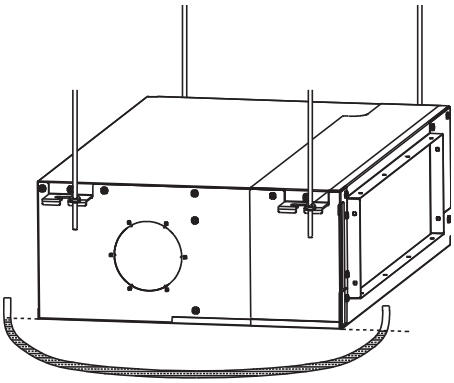

Fig. 23 —Keep Unit Level

4. Use a transparent hose to observe water level (principle of communicating vessels) and verify the tilt angle of the unit in the length direction. It shall be installed level or at an angle within 1° towards the drainage side. For units without a drain pump, ensure a slope of 1/100 towards the drainage side. Do not tilt towards the non-drainage side. Otherwise, water cannot drain smoothly and leaks can easily occur.

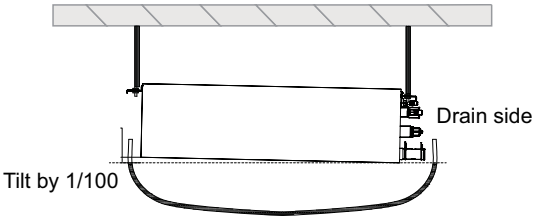

Fig. 24 —Observe Water Level

5. For units with fresh air functions, before installing indoor units, use diagonal pliers to remove the knockout at the fresh air unit at one side of the unit in advance. Install fresh air flanges at the fresh air unit and secure it with the flange connecting screws.

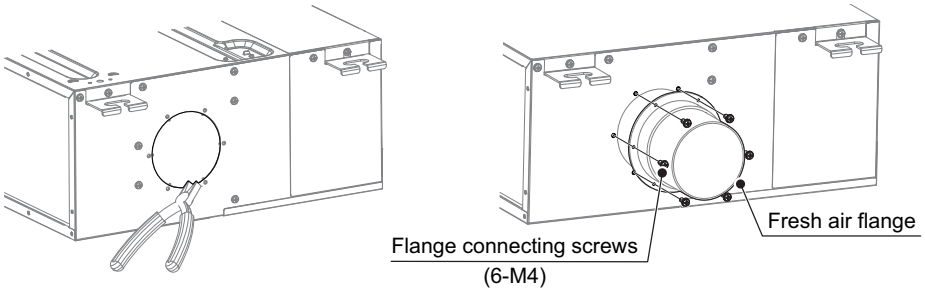

Fig. 25 —Units with Fresh Air Functions

WARNING

When connecting the fresh air unit, insulate the fresh air pipe with polyethylene foam insulation materials that are at least 3/8 in (10 mm) thick.

The temperature difference between the fresh air provided by the fresh air unit to the indoor unit and the indoor temperature shall not exceed 41 °F (5 °C), otherwise there is a risk of condensation in the return air area of the air conditioner. use a fresh air unit equipped with a temperature regulation function. Or cover the enclosure of the fresh air outlet of the air conditioner with polyethylene foam insulation material with a thickness of at least 3/8 in (10 mm). The area and thickness of the insulation material should be adjusted depending on the actual situation.

6. Remove the display box and its supporting board from the accessories, fix the supporting board onto the cover of the electronic control box, place the display box inside the supporting board, and secure it with screws.

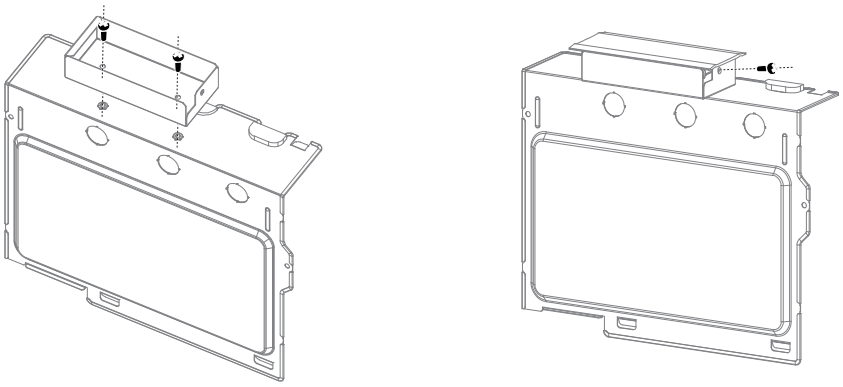

Fig. 26 —Attach Supporting Board to Electronic Control Box

AIR INLET GRILLE

When designing the air inlet panel of the air return plenum, pay attention to the distance between the vanes of the air inlet grille and try to keep the vanes in parallel with the air inlet direction.

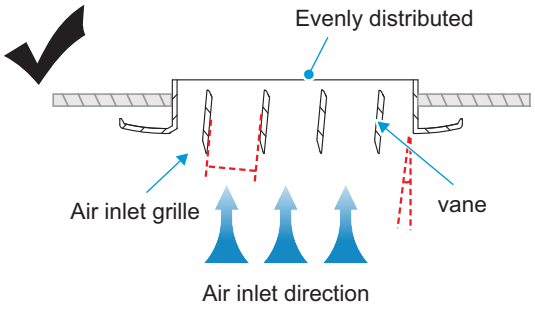

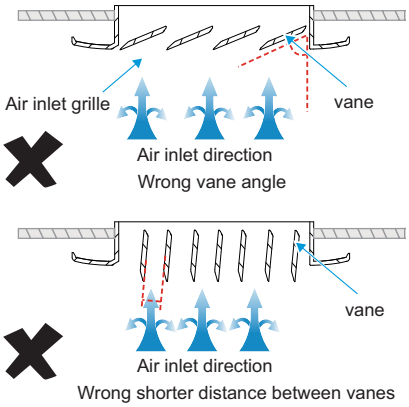

Fig. 27 —Designing Air Inlet Panel of Air Return Plenum

If the air outlet panel is far away from the unit and needs to be connected to the outlet air flange through a metal air duct, make sure to attach polyethylene foam to the metal contact surface to guarantee insulation.

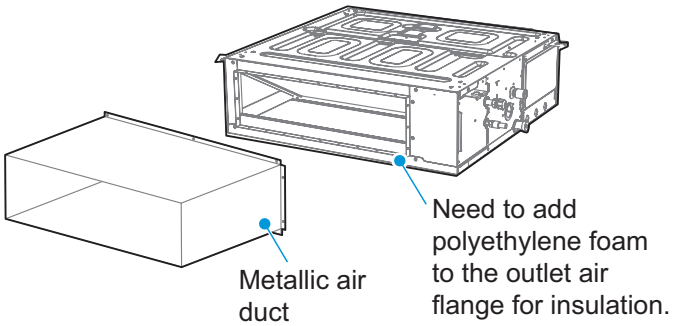

Fig. 28 —Attach Polyethylene Foam to Metal Contact

5. REFRIGERANT CONNECTING PIPING INSTALLATION

When connect different series of outdoor units, the length and level differences of piping connections. Refer to the Installation and Operation Manual of the outdoor unit.

CAUTION

The installation of pipe-work shall be kept to a minimum.

During the installation of the connecting pipes, do not allow air, dust, and other debris to penetrate the piping system, and make sure the interior of the pipes is dry.

Install the connecting pipes only when the indoor units and outdoor units are mounted.

When installing the connecting pipes, record the actual installation length of the liquid pipe so that additional refrigerant can be added.

The connecting pipes must be wrapped with thermal insulation materials when they are installed.

In the event of refrigerant gas leakage during operation, ventilate immediately.

Pipe layout

1. The deformed pipe area must not exceed 15%.
2. A protective sleeve should be installed at the wall or floor hole.
3. The weld joint must not be inside the insulation.
4. The drill hole on the external wall must be sealed.

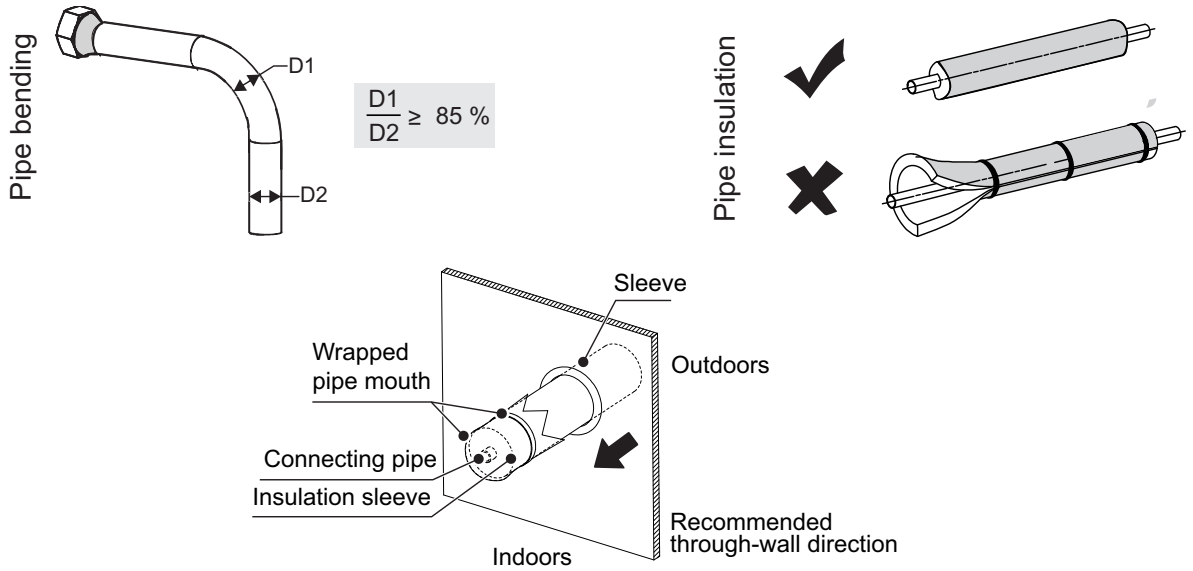

Fig. 29 —Pipe Layout

Pipe Connection Steps

CAUTION

Bend and arrange pipes carefully without damaging the pipes and their insulating layers.

DO NOT let the interface of the indoor unit bear the weight of the connecting pipe; otherwise, the connecting pipe may be crushed and deformed, which will affect the cooling (heating) effect, or the thermal insulation materials may be compressed, resulting in air leakage and condensation.

The connecting pipes to the outdoor units. Refer the Installation and Operation Manual of the outdoor units.

Processing method

Mechanical bending processing: Wider application [ϕ 1/4 in (6.35 mm) to ϕ 1-1/8 in (28 mm)], using spring pipe bender, manual pipe bender or electric pipe bender.

CAUTION

The bending angle should not exceed 90°; otherwise, wrinkles will be formed in the pipe, which can easily break.

The bending radius should not be smaller than 3.5D (pipe diameter) and should be as large as possible to prevent the pipe from becoming flattened or crushed.

When mechanically bending the pipe, the pipe bender inserted into the connecting pipe must be cleaned.

1. **Brazing Pipes**
   When brazing pipes, fill the pipes with nitrogen.

CAUTION

When it is necessary to fill the piping with nitrogen during brazing, the pressure must be kept at 20 Pa(0.2 bar) using a pressure relief valve.

Do not use flux when brazing the piping. Use a phosphor copper that does not require flux.

Do not use any antioxidants when brazing the piping. The piping may become clogged with residual antioxidants, which may block components such as electronic expansion valves during operation.

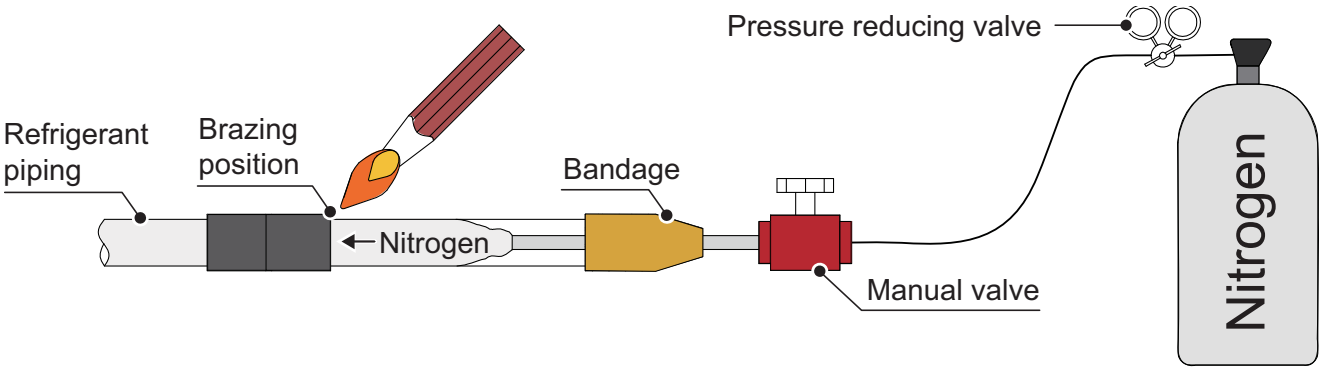

Fig. 30 —Brazing Pipes

2. Flaring

To cut the piping with a pipe cutter, rotate the pipe cutter repeatedly.

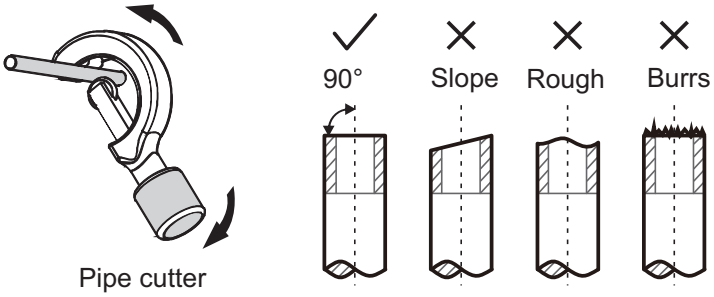

Outer diameter [mm(in)]	A[mm(in)]	
	Max.	Min.
Φ 1/4 (6.35)	5/16 (8.7)	5/16 (8.3)
Φ 3/8 (9.52)	1/2 (12.4)	1/2 (12.0)
Φ 1/2 (12.7)	5/8 (15.8)	5/8 (15.4)
Φ 5/8 (15.9)	3/4 (19.1)	3/4 (18.6)
Φ 3/4 (19.1)	15/16 (23.3)	7/8 (22.9)

Fig. 31 —Cut Piping with Pipe Cutter

Put the pipe into the connecting nut flaring, and both the gas pipe and liquid pipe of the indoor unit are connected by flaring.

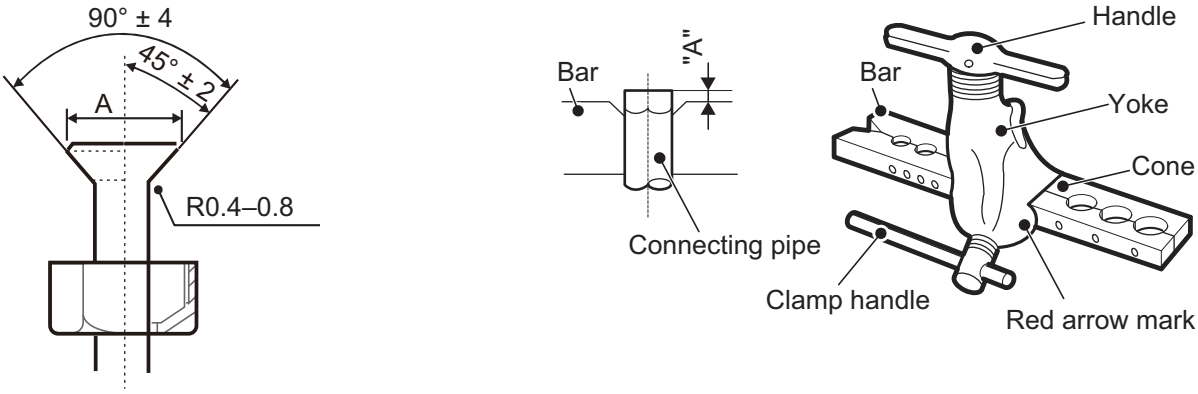

Fig. 32 —Flaring

3. **Nut fastening**
   a. Connect the indoor unit first, then connect the outdoor unit.Before tightening the flare nut, apply refrigeration oil on the inner and outer surface of the pipe flare (must use refrigeration oil compatible with the refrigerant for this model), and turn it 3 turns or 4 turns by hand to tighten it.When connecting or removing a pipe, use two wrenches at the same time.

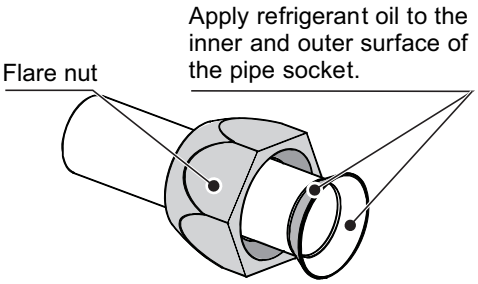

Fig. 33 —Tighten Threads by Hand

   b. Align the connecting piping, firstly tighten most of the thread of the connecting nut by hand, and then use a torque wrench to tighten the last 1 to 2 turns of the thread as shown in the Fig 34 and 35.

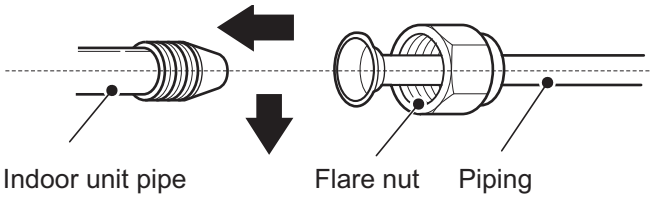

Fig. 34 —Connect Indoor Unit First

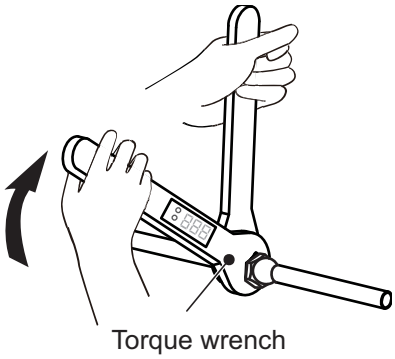

Fig. 35 —Finish Tightening with Torque Wrench

   c. The brazing is done on site, and the bell mouth cannot be used indoors.
   d. The protective nut is a one-time part, it can not be reused. In case it is removed, it should be replaced with a new one.

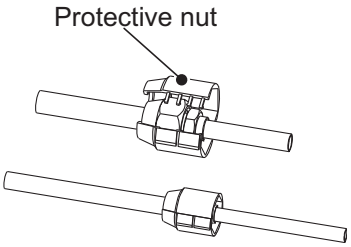

Fig. 36 —Protective Nut

CAUTION

When flared joints are reused indoors, the flare part should be re-fabricated. Mechanical connectors used indoors shall comply with ISO 14903.

Table 11 — Torque Values

Pipe size [in (mm)]	Tightening torque [ft-lbs (N.m)]
Φ 1/4 (6.35)	10.5–12.7 (14.2–17.2)
Φ 3/8 (9.52)	24.12–29.5 (32.7–39.9)
Φ 1/2 (12.7)	36.5–44.5 (49.5–60.3)
Φ 5/8 (15.9)	45.6–55.6 (61.8–75.4)
Φ 3/4 (19.1)	71.7–87.5 (97.2–118.6)

CAUTION

Excessive torque will damage the flared mouth and nut, and too small torque cannot tighten the nut, which will cause refrigerant leakage. Refer to the above table to determine the appropriate tightening torque.

Refrigerant Piping Repair

Angle iron brackets or round steel hangers should be used for repair. When the liquid pipe and gas pipe are suspended together, the size of the liquid pipe shall prevail.

Table 12 — Pipe Outer Diameter

Pipe Outer Diameter [in (mm)]	≤ 13/16 (20)	13/16~1-9/16 (20~40)	≥ 9/16 (40)
Horizontal pipe distance [in (m)]	39-3/8 (1.0)	59-1/16 (1.5)	78-3/4(2.0)
Stand pipe distance [in (m)]	59-1/16 (1.5)	78-3/4 (2.0)	98-7/16 (2.5)

Vacuum Pumping

Connect the vacuuming unit through a manifold to the service port of all stop valves.

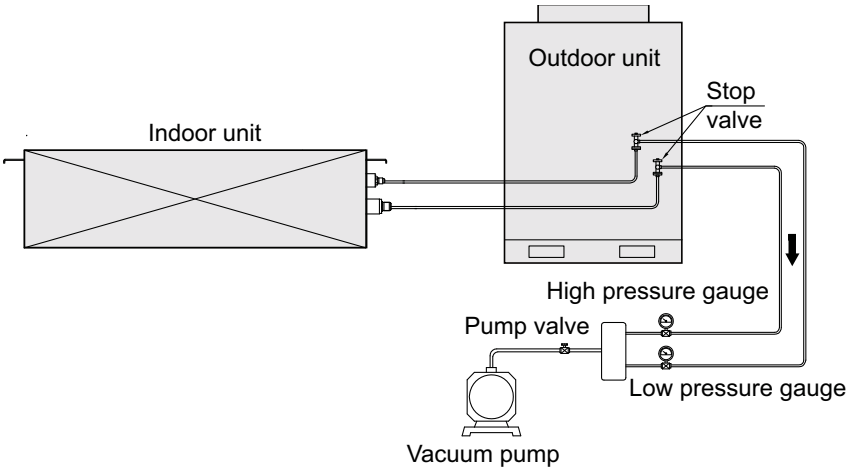

Fig. 37 —Vacuum Pumping

CAUTION

Do not purge the air with refrigerant of outdoor unit, it will cause fire or system malfunction.

Leak Detection

The leak test shall comply with ANSI/ASHRAE Standard 15.

1. **To check for leaks: Vacuum leak test**
   a. Evacuate the system from the liquid and gas piping to –100.7 kPa (–1.007 bar)(5 Torr absolute) for more than 2 hours.
   b. Once reached, turn off the vacuum pump and check that the pressure does not rise for at least 1 minute.
   c. Should the pressure rise, the system may either contain moisture (see vacuum drying below) or have leaks.
2. **To check for leaks: Pressure leak test**
   a. Test for leaks by applying a bubble test solution to all piping connections.
   b. Discharge all nitrogen gas.
   c. Break the vacuum by pressurizing with nitrogen gas to a minimum gauge pressure of 0.2 MPa (2 bar). Never set the gauge pressure higher than the maximum operation pressure of the unit, i.e. 4.0 MPa (40 bar).

CAUTION

Under no circumstances shall potential sources of ignition be used in the searching for or detection of refrigerant leaks. A halide torch (or any other detector using a naked flame) shall not be used.

Leak detection fluids are suitable for use with most refrigerants but the use of detergents containing chlorine shall be avoided as the chlorine may react with the refrigerant and corrode the copper pipework.

Electronic leak detectors shall be used to detect flammable refrigerants, but the sensitivity may not be adequate, or may need re-calibration. (Detection equipment shall be calibrated in a refrigerant-free area.) Ensure that the detector is not a potential source of ignition and is suitable for the refrigerant used. Leak detection equipment shall be set at a percentage of the LFL of the refrigerant and shall be calibrated to the refrigerant employed and the appropriate percentage of gas (25% maximum) is confirmed.

NOTES:

ALWAYS use a recommended bubble test solution from your wholesaler.

NEVER use soap water:

- **Soap water may cause cracking of components, such as flare nuts or stop valve caps.**
- **Soap water may contain salt, which absorbs moisture that will freeze when the piping gets cold.**
- **Soap water contains ammonia which may lead to corrosion of flared joints (between the brass flare nut and the copper flare).**

Refrigerant Charge

The refrigerant is pre-charged in the outdoor unit at the factory, but additional refrigerant may be necessary depending on the field piping.

WARNING

Compliance with national gas regulations shall be observed.

Keep ventilation openings clear of obstruction.

Ensure that the refrigeration system is grounded prior to charging the system with refrigerant.

Label the system when charging is complete (if not already).

Extreme care shall be taken not to overfill the refrigeration system.

CAUTION

Cylinders shall be kept upright if a siphon tube is present.

Insulation Treatment

Pipes on the liquid and air sides have a low temperature during cooling. Take sufficient insulation measures to prevent condensation.

- Be sure to use a thermal insulation material with a heat resistance of 120 °C(248 °F) or higher for the gas pipe.
- The attached insulation material for the part of the indoor unit where the pipe connects must undergo heat insulation treatment that leaves no gaps.
- For outdoor pipelines, additional protective treatments should be performed, such as adding metal duct boxes or wrapping the pipes with aluminum foil materials. Thermal insulation materials directly exposed to the open air will degrade and lose their insulating properties.

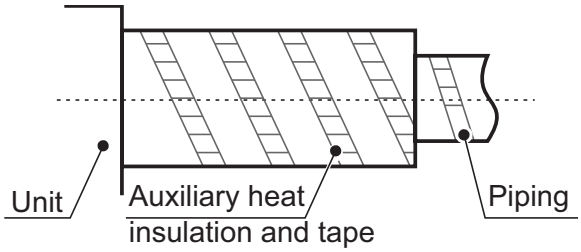

Fig. 38 —Insulation Material

6. DRAIN PIPE INSTALLATION

⚠ CAUTION

Before installation of the drain pipe, determine its direction and elevation to avoid intersection with other pipelines to ensure that the slope is straight.

The highest point of the drain pipe should be equipped with a vent port to ensure the smooth drainage of condensate water, and the vent port must face downwards to prevent dirt from entering the pipe.

Do not connect the drain pipe to the wastewater pipe, sewage pipe, or other pipes that produce corrosive gases or odors. Otherwise, the indoor unit (especially the heat exchanger) may be corroded and odor may enter the room, negatively impacting the heat exchange effects and user experience. The user will assume responsibility for any consequences resulting from failure to abide by instructions.

After the pipeline connection is completed, a water test and a full water test should be done to check whether the drainage is smooth and whether the pipeline system leaks.

The unit's drain pipe must be installed separately from other sewage pipes, rainwater pipes and drain pipes in the building.

Adverse slope, convex and concave pipes are prohibited, as improper airflow will cause poor drainage.

Drain pipes need to be evenly wrapped with thermal insulation pipes to prevent condensation.

All joints of the drainage system must be sealed to prevent water leakage.

Connect the drain pipes in the following ways. Improper installation of the pipes may result in water leakage and damage to furniture and property.

Installation of Water Drain Pipe for the Indoor Unit

1. Units without pumps: Use the attached drain hose to connect to the drain pan outlet and PVC pipe, and fasten the two ends of the drain hose with a cable tie. Then push the thermal insulation pipe to be closely attached to the indoor unit, and finally fasten the end with a cable tie.

   Units with pumps: Connect a PVC pipe to the water pump outlet, and fasten it with a cable tie. Then push the thermal insulation pipe until it is closely attached to the indoor unit, and finally fasten the end with a cable tie.

   The connection between the two ends of the drain pipes and the connection of the water pump outlet need to be fastened with a cable tie, in combination with PVC/rubber adhesives. Pay attention to the instructions for the use of the adhesives to prevent corrosion to the EPDM rubber. Use hard PVC adhesives for connecting to other water piping. Check that the connections are tight with no leakage.

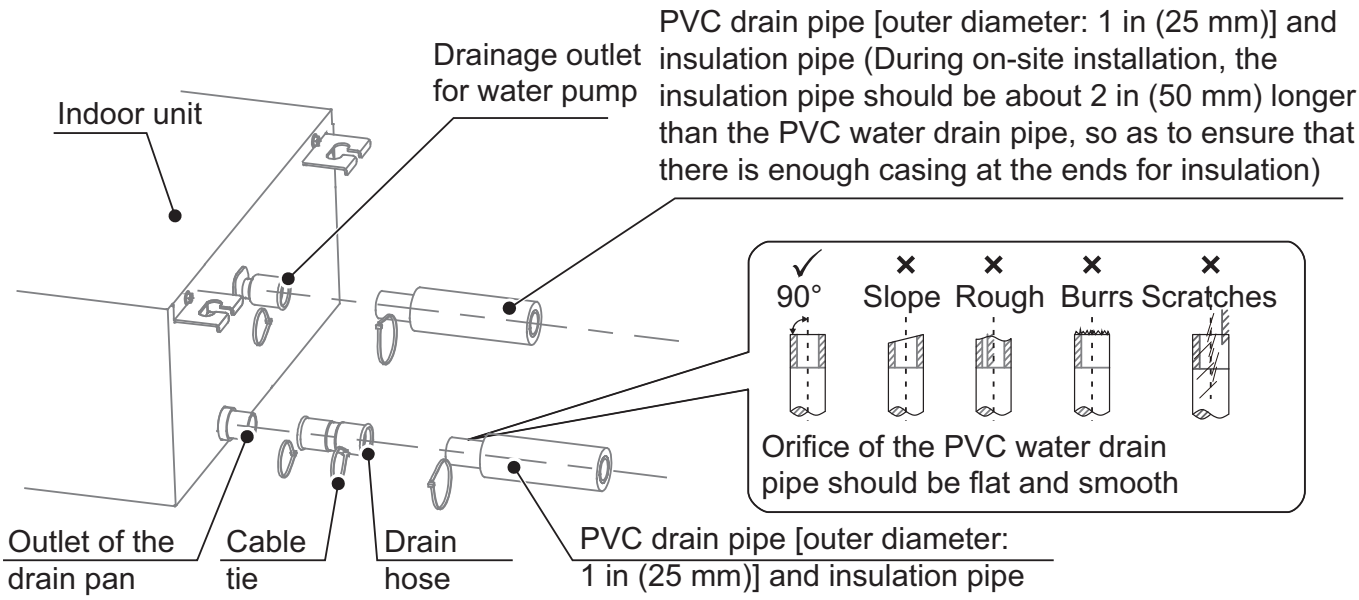

Fig. 39 —Connecting Drain Pipes and Water Pump Outlet

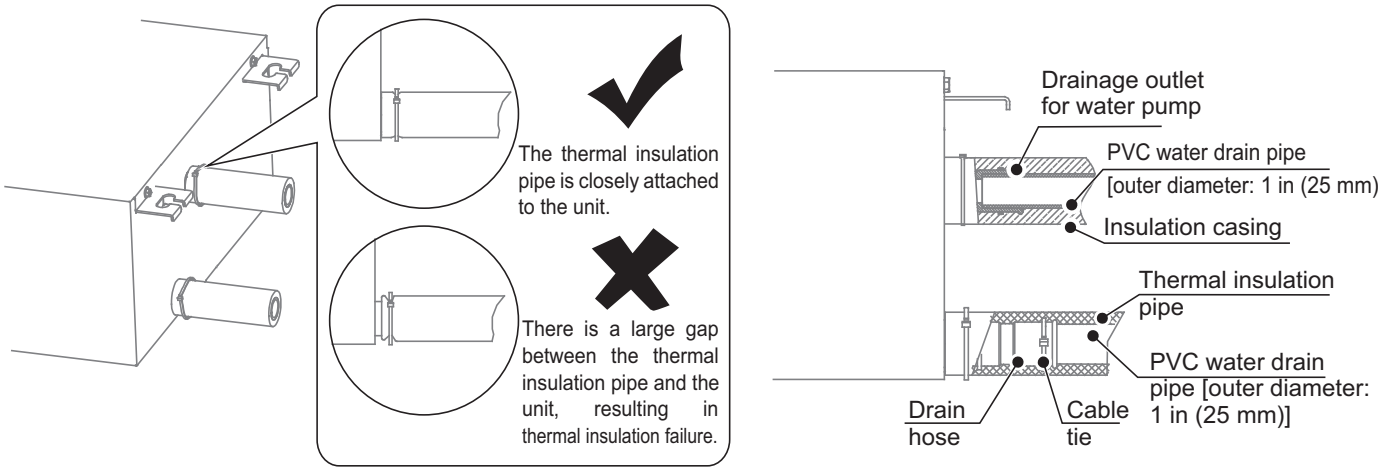

Fig. 40 —Connecting Drain Pipes and Water Pump Outlet

2. The water pump connecting pipe and drain pipe (in the indoor part) must be wrapped with heat insulation pipe evenly and bound with cable ties to prevent air from entering and producing condensate.

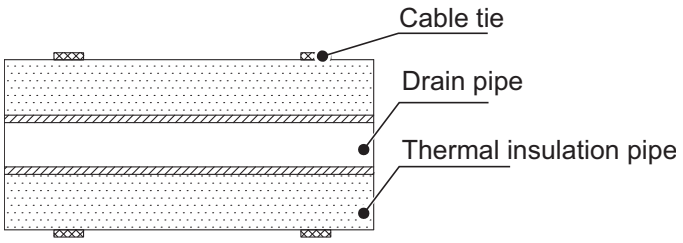

Fig. 41 —Wrap with heat insulation pipe bind with cable ties

3. To prevent water from flowing back into the unit when it stops running, the drain pipe should be inclined downward to the outdoor side (drainage side), with a downward slope of 1/100 or above. The drain pipe should be positioned in the same direction as the drainage outlet of the unit in the left and right direction, so that the drain pipe does not expand and collect water; otherwise, it may cause abnormal noise.

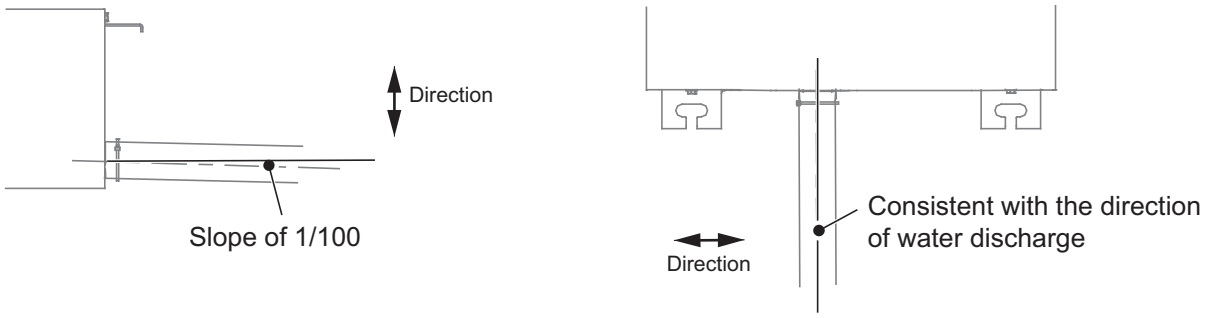

Fig. 42 —Position Drain Pipe in same Direction as Drainage Outlet

4. When connecting the drain pipe, do not pull the drain pipe forcefully, or it may become loose. The lateral length of the drain pipe should be within 65.7 ft. (20 m), and a support point should be set every 2.6 ft to 3.3 ft (0.8 m to 1.0 m) to avoid air resistance caused by the deformation of the drain pipe. The drain pipe shall be equipped with a support point every 4.9 ft to 6.6 ft (1.5 m to 2. 0m).

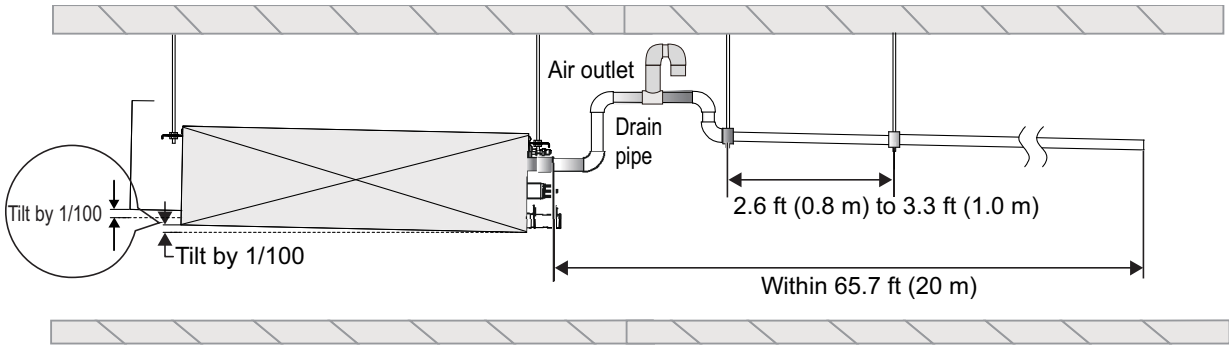

Fig. 43 —Connecting Drain Pipe

5. The end of the drain pipe must be more than 2 in (50 mm) above the ground or from the base of the water drainage slot. In addition, do not submerge it in water. To drain the condensed water directly into a ditch, the water drain pipe must bend upwards to form a U-shaped water plug to stop odors from entering the room via the water drain pipe.

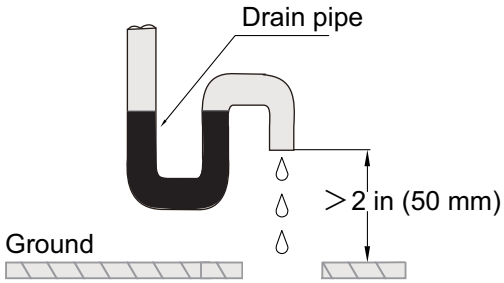

Fig. 44 —Position End of Drain Pipe

Connection Method to Drain Water with the Drain Pump

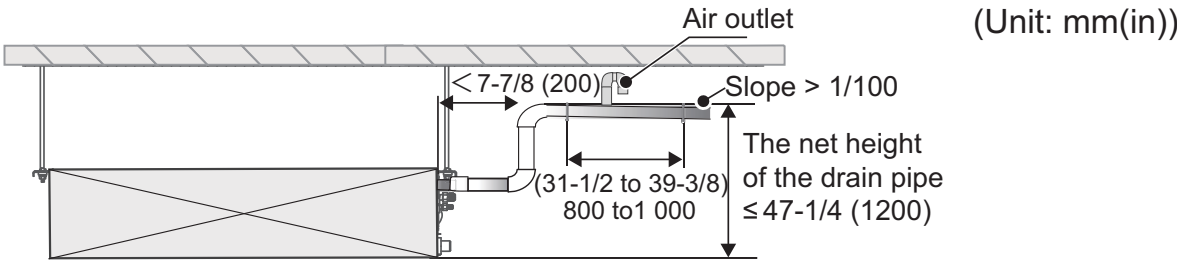

Fig. 45 —Method to Connect Drain Pipe for Single Unit

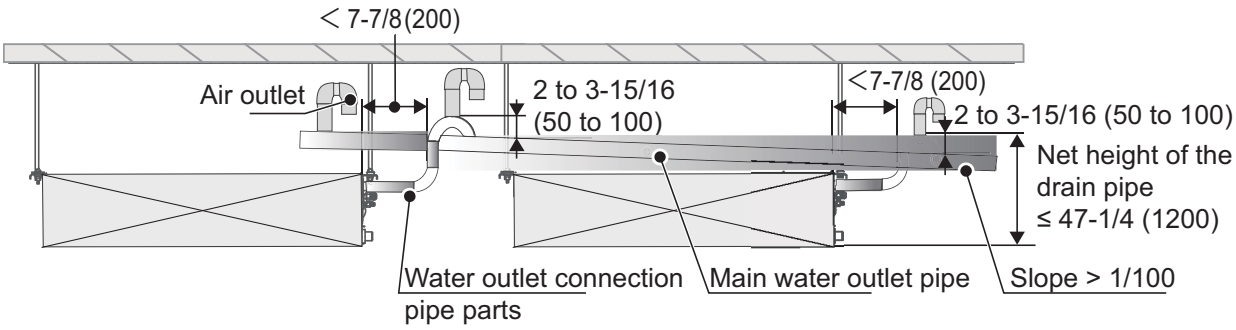

Fig. 46 —Drain Pipes from Multiple Units Connected to Main Drain Pipe to be Drained through Sewage Pipe

Inconsistent drainage directions must be prevented for horizontal drain pipes to avoid adverse slopes and poor drainage.

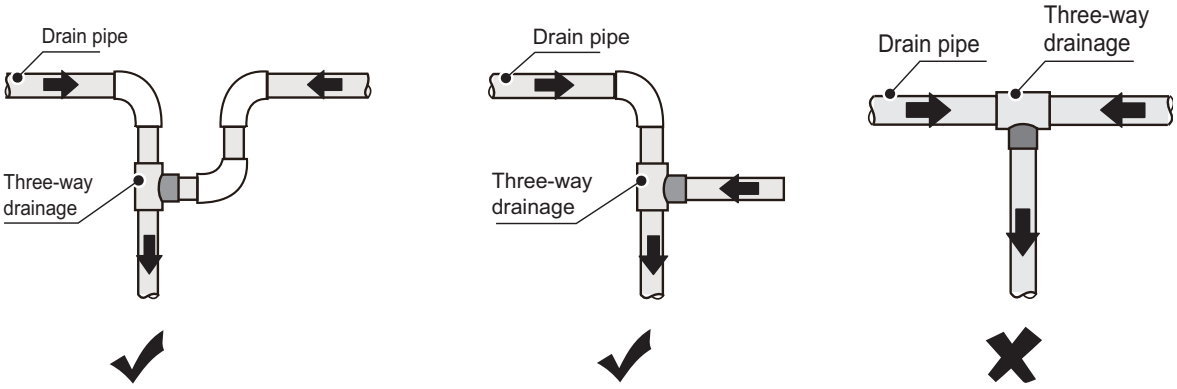

Fig. 47 —Inconsistent Drainage Directions

How to drain water without the drain pump

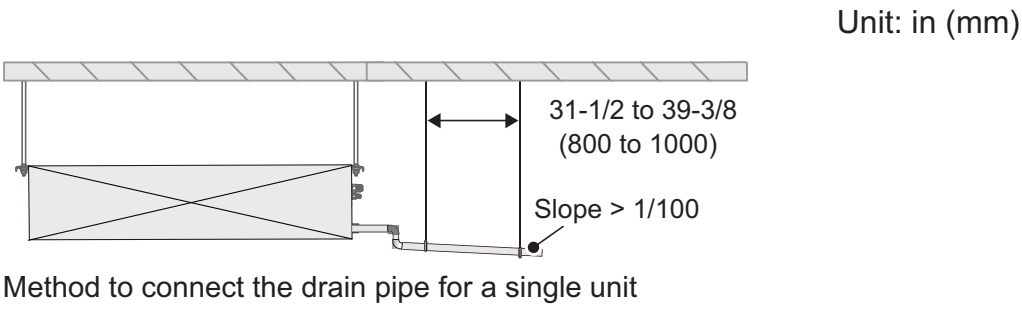

Fig. 48 —Connecting Drain Pipe for Single Unit

Drain pipes from multiple units are connected to the main drain pipe to be drained through the sewage pipe.

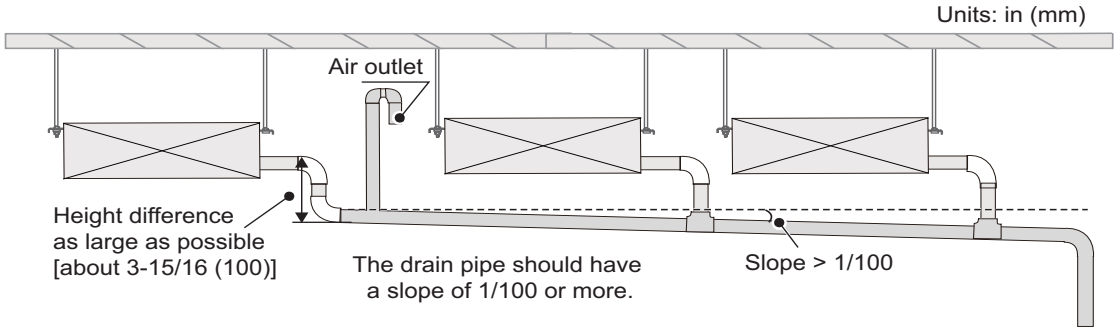

Fig. 49 —Connecting Drain Pipes from Multiple Units

Water Drainage Test

1. Before the test, make sure that the water drain piping is smooth, and check that each connection is properly sealed.
2. Conduct the water drainage test in a new room before the ceiling is plastered.
   a. Inject water into the drain pan with the water injection pipe. The amount of water injected is shown in Table 13.
   b. Connect the power supply, and set the air conditioner to operate in cooling mode. Check whether drainage outlets normally drain water (based on drain pipe length, water will be drained 1 minute later), and check connectors for leakage.
   c. If water is drained through the indoor unit drain pump, loosen the water cover (black round plastic piece) on the unit during the drainage test and check whether the drain pump is operating. If the drain pump has not been started, check whether the drain pump has malfunctioned. Note: The drain pump only starts in cooling mode. While in heating mode, the drain pump remains turned off. After the water drainage test is completed, install the water cover assembly in position. For details on water cover assembly and the water injection pipe, see Fig. 50 below.

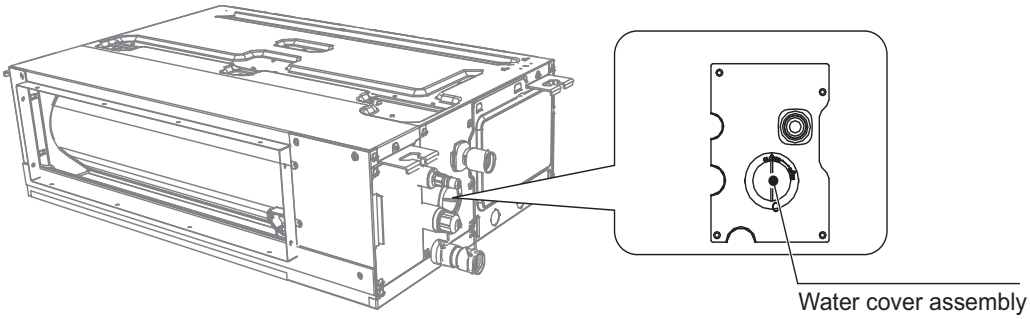

Fig. 50 —Water Drainage Test

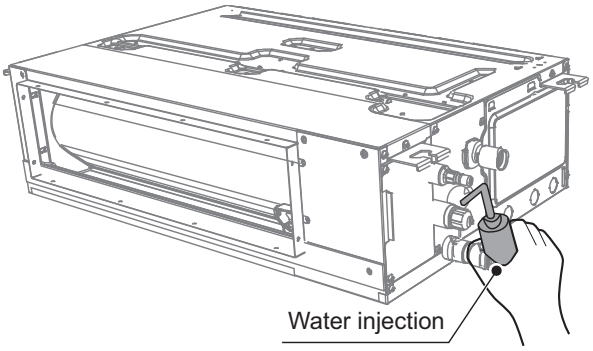

Fig. 51 —Water Injection

Table 13 — Water Injection Amount

INDOOR UNIT CAPACITY (kBtu/h)	WATER INJECTION AMOUNT
kBtu/h ≤ 7	1100
7 < kBtu/h ≤ 12	1400
12 < kBtu/h ≤ 18	2000
18 < kBtu/h ≤ 24	2200
24 < kBtu/h ≤ 36	2400

7. AIR DUCT INSTALLATION

- Use locally purchased air ducts and soft air ducts (Use environmentally friendly, odorless materials, otherwise the air conditioner may generate odor when it runs).
- Install the flange at the air return side, and use aluminum foil tape to seal the connection part between the flange and the air duct to avoid air leakage.
- Use aluminum foil tape to seal the connection part between the flange at the air supply side and the air duct to avoid air leakage.
- The air ducts on the air supply side shall be insulated to prevent condensation.
- When installing the air duct and its components, need to fix and adjust the supports and suspension brackets to ensure they are in the right position and subject to uniform force.
- Make sure that the air duct and its components are clean before installation.
- After installation, carry out the air tightness test on the air duct to ensure its air leakage meets standards.

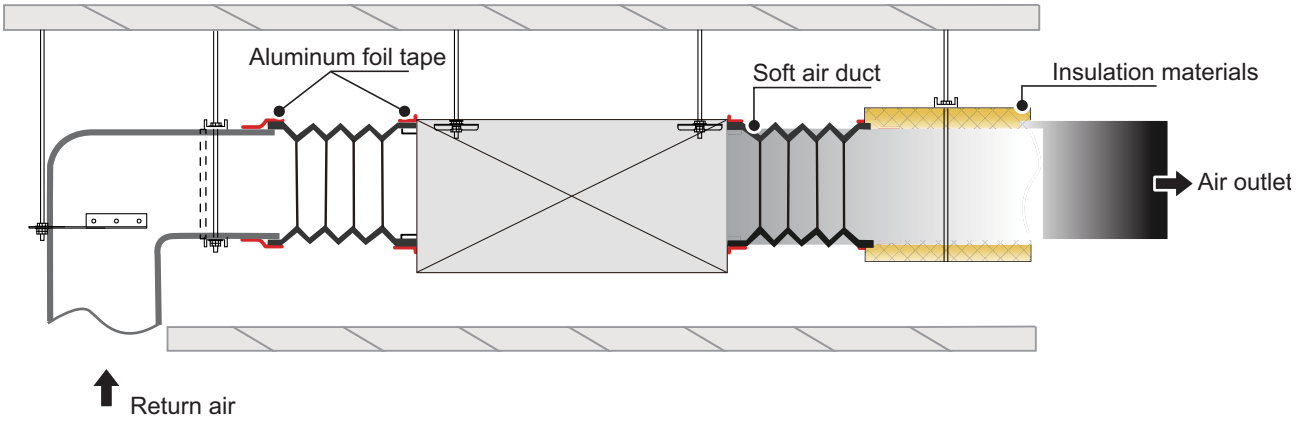

Fig. 52 —Air Duct Installation

CAUTION

Connect the air outlet and return air inlet to the ceiling opening properly to avoid short circuit caused by return air (See the Fig 53).

Use canvas or soft air duct to connect the indoor unit and air duct at a distance (width) of 5-15/16 in (150 mm) to 11-13/16 in (300 mm).

Do not lay wires, cables or other pipes containing toxic, flammable, and explosive gases or liquids inside the air ducts.

The air duct regulating device shall be installed in a position that is easily accessible, flexible, and reliable.

The air duct should be securely connected to the vent.

The frame shall fit snugly into the building decoration, and should appear neat and flexible. It shall not be twisted or warped.

If the air vent is installed horizontally, its deviation shall not exceed 3/1 000; if installed vertically, its deviation shall not exceed 2/1 000.

All the air vents in one room shall be neatly installed at the same height.

All metal accessories (including supports, suspension brackets, and brackets) for the piping system shall undergo anti-corrosion treatment.

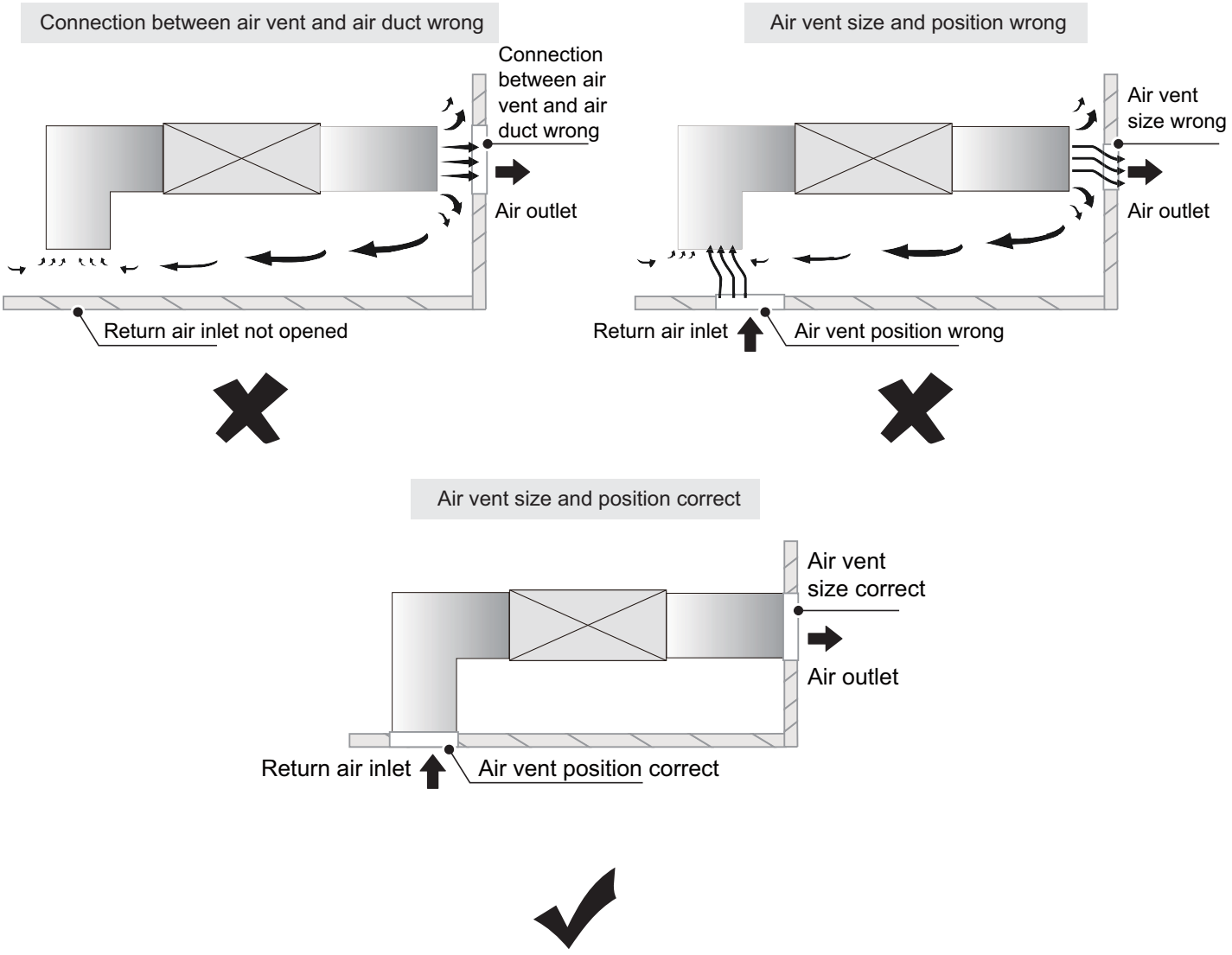

Fig. 53 —Connecting the Air Duct

ELECTRICAL CONNECTION

DANGER

The power supply must be cut off before any electrical work is carried out. Do not conduct electrical work when the power is on; otherwise, it may cause serious personal injury.

The air conditioning unit must be grounded reliably and must meet the requirements of the local country/region. If the grounding is not reliable, serious personal injury due to electric leakage may occur.

WARNING

The appliance shall be installed in accordance with national wiring regulations.

Installation, inspection or maintenance operations must be completed by professional technicians. All parts and materials must comply with the relevant regulations of the local country/region.

The unit must be equipped with a special power supply, and the power supply voltage should conform to the nominal working voltage range of the air conditioning unit.

The power supply of the air conditioning unit must be equipped with a power disconnect device that conforms to the requirements of relevant local technical standards for electrical equipment. The power disconnecting device must be equipped with short circuit protection, overload protection and electric leakage protection. The clearance between open contacts of the power disconnecting device shall be at least 1/8 in (3mm).

The core of the power supply cable must be made of copper, and the wire diameter should meet the current-carrying requirements. For details, refer to the "Power supply cable Diameter and Electric Leakage Protector Selection". A wire diameter that is too small may cause the power supply cable to heat up, resulting in a fire.

The power supply cable and the grounding wires should be secured reliably to avoid stress on the terminals. Do not pull the power supply cable forcibly; otherwise, the wiring may become loosened or the terminal blocks may be damaged.

Strong current wires such as power supply cable cannot be connected to weak current wires such as communication wiring; otherwise, the product may be seriously damaged.

Do not bond and connect the power supply cable. Bonding and connecting the power supply cable may cause it to heat up, resulting in a fire.

⚠ CAUTION

Avoid bonding and connecting the communication wiring. If doing so is unavoidable, at the very least, ensure a reliable connection by crimping or soldering and make sure the copper wire at the connection is not exposed; otherwise, communication failure may occur.

The power supply cable and communication wiring must be routed separately, with a distance of over 2 in (5 cm). Otherwise, communication failure may occur.

Keep the vicinity of the unit as clean as possible to avoid small animals from nesting and biting the cables. If a small animal touches or bites the cables, short circuiting or electric leakage may occur.

Do not connect the grounding wires to the gas pipe, water pipe, lightning rod grounding wires or telephone grounding wires.

Gas pipe: Risk of explosion and fire when gas leaks.

Water pipe: If rigid plastic pipes are used, there will be no grounding effect.

Lightning rod grounding wires or telephone grounding wires: In the event of lightning strikes, abnormal grounding potential may rise.

After all wiring is completed, check carefully before turning on the power supply.

Table 14 — Electrical Characteristics

Capacity (kBtu/h)	Electric specifications of the indoor unit				Indoor Fan Motor
	Frequency (Hz)	Voltage (V)	MCA (A)	MFA (A)	Rated Motor Output (W)
05	60	208/230	1.13	15	20
07			1.13		20
09			1.19		20
12			1.19		20
15			1.32		30
18			1.32		30
24			1.43		50
30			1.94		60
36			1.94		60

NOTES:

MCA: Min. Circuit Amps. (A), which is used to select the minimum circuit size to ensure safe operation over a long period of time.

MFA: Max. Fuse Amps. (A), which is used to select the circuit breaker.

WIRING DIAGRAM

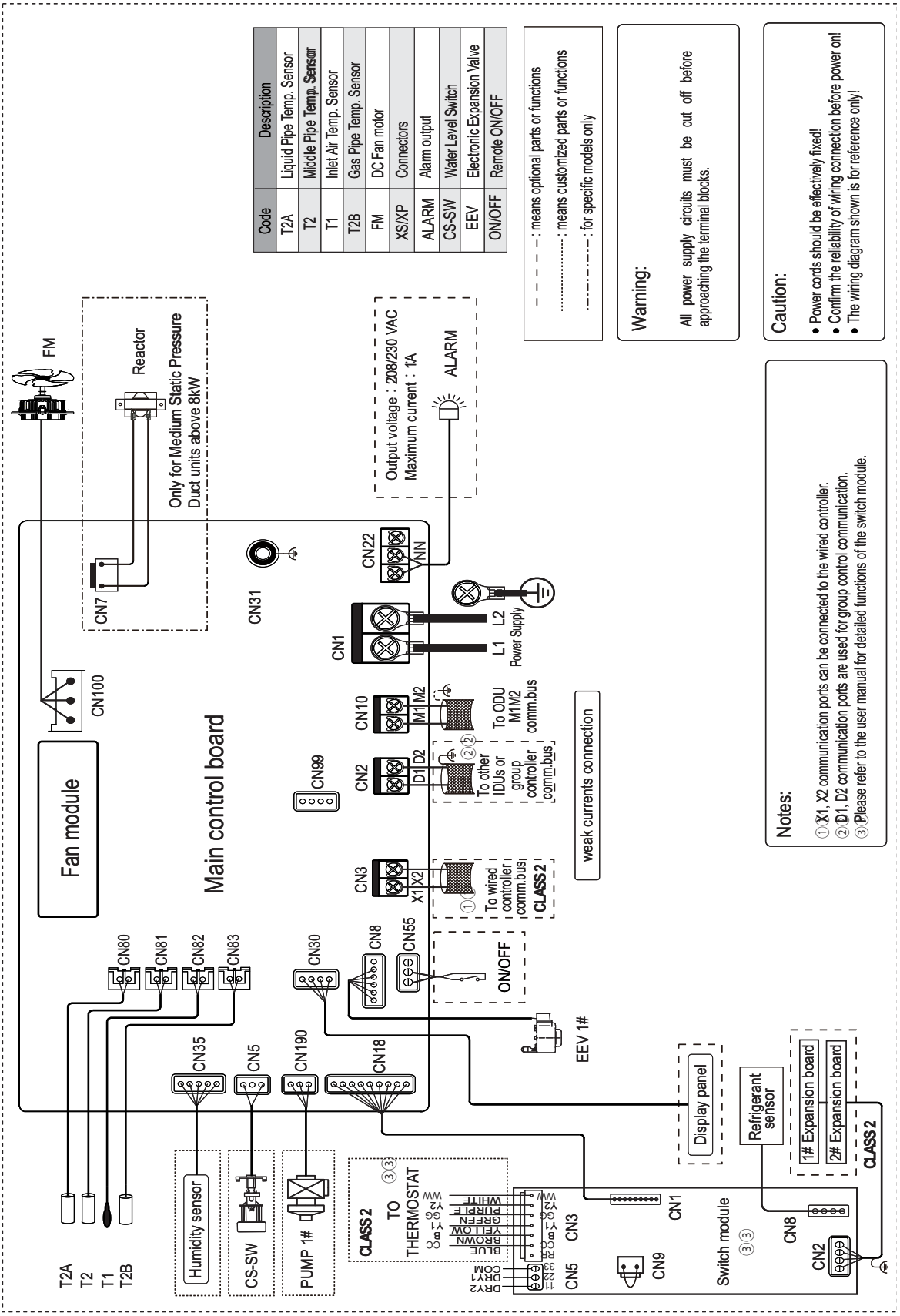

Fig. 54 —Wiring Diagram

Wiring

1. **Open the indoor unit's electric control box cover.**
   a. Remove the two screws at the positions shown in Fig. 55;
   b. Pull the bottom end of the electric control box cover horizontally outward;
   c. Remove the electric control box cover by pulling downwards.

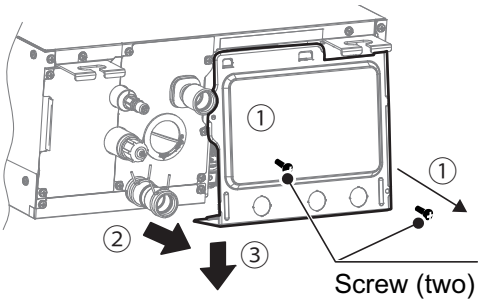

Fig. 55 —Remove Electronic Control Box

2. **Connect the strong current wires (power supply cable and alarm signal output wires) and weak current wires (communication wiring, display box communication wiring, remote switch communication wiring, expansion board communication wiring) to the electric control box through the strong and weak current inlets of electric control box.**

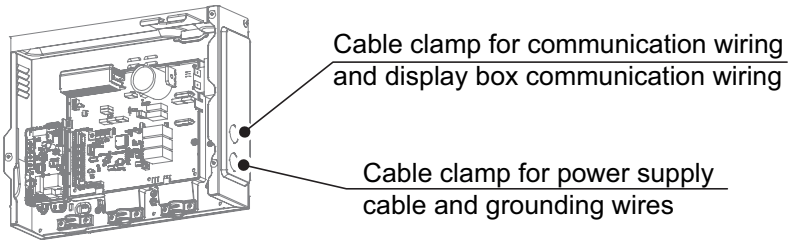

Fig. 56 —Connect Wires to Electronic Control Box

⚠ CAUTION

Power supply cable must be routed separately from the other cable such as communication wiring and display box communication wiring.

The strong and weak current wires must be separated.

The expansion board are optional.

3. **Power supply cable connection**
   a. Connection between the power supply cable and power supply terminal

   The power supply terminal of the indoor unit is fixed on the main control board, the power supply cable is connected to the power supply terminal labeled "CN1" on the main control board. The live and neutral wires are connected according to the main control board logos "L1" and "L2", and the grounding wires are directly connected to the electric control box sheet metal part.

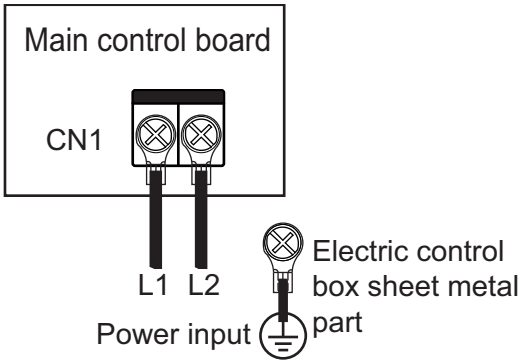

Fig. 57 —Connection Between Power Supply Cable and Power Supply Terminal

⚠ CAUTION

A Do not bond and connect the power supply cable. Bonding and connecting the power supply cable may cause it to heat up, resulting in a fire.

B The power supply cable must be crimped reliably using an insulated circular terminal block, and then connected to the power supply terminal of the indoor unit, as shown in the figure below.

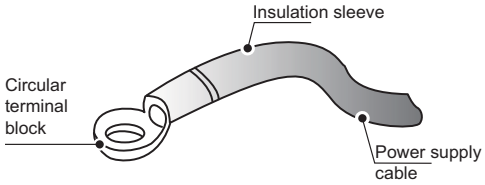

C If it fails to crimp the insulated circular terminal block due to on-site limitations, connect the power supply cable of the same diameter to both sides of the power supply terminal block of the indoor unit, as shown in the figure below.

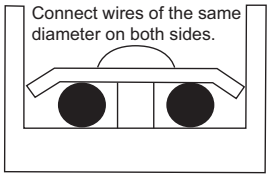

D Do not press the power supply cable of the same wire diameter on the same side of the terminal. Do not use two power supply cable of different wire diameters for the same terminal blocks; otherwise, they can easily loosen due to uneven pressure and cause accidents, as shown in the figure below.

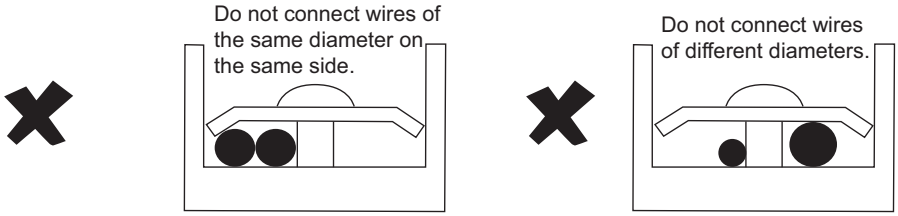

E The connected power supply cable should be routed outside the cable conduit, as shown in as shown in the right figure.

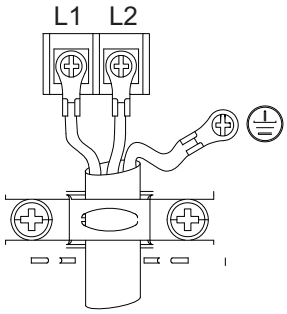

b. Power supply cable system connection

Use a dedicated power supply for the indoor unit that is different from the power supply for the outdoor unit.

Use the same power supply, circuit breaker and leakage protective device for the indoor units connected to the same outdoor unit.

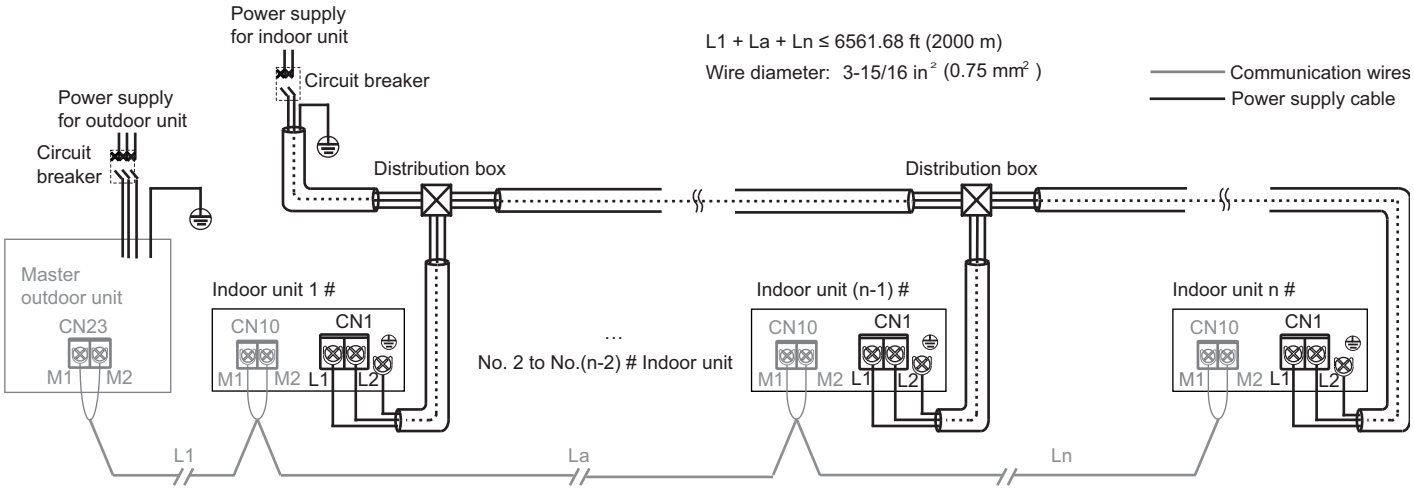

Fig. 58 —Power Supply Cable System Connection

4. Communication wiring connection

a. Explanation of Communication Methods between indoor unit and outdoor unit

The HyperLink (M1M2) communication method is used between the indoor unit and outdoor unit, which has the following characteristics:

- Any topology connection of communication wiring.
- Two-core and non-polar communication for M1M2.

⚠ CAUTION

Do not connect the HyperLink (M1M2) communication line to the RS-485 communication interface, such as D1D2.

Table 15 — Selection of Communication Wiring Diameter

Function	Indoor unit and outdoor unit communication	One controller to one indoor unit (Two controllers to one indoor unit) Communication	One-to-more (centralized controller) Communication
Item	Hyperlink (M1M2) communication (Indoor units are powered uniformly)	X1X2 communication	D1D2 communication
Wire Diameter	2 x 3-15/16 in² (0.75 mm²)	2 x 3-15/16 in² (0.75 mm²) (shielded cable)	2 x 3-15/16 in² (0.75 mm²) (shielded cable)
Length	≤ 6561.68 ft (2000 m)	≤ 656.17 ft (200 m)	≤ 3937.01 ft (1200 m)

⚠ CAUTION

Select the communication wiring according to the requirements in Table 15. Use shielded cables for communication when strong magnetism or interference is present.

On-site wiring must comply with the relevant regulations of the local country/region and must be completed by professionals.

Do not connect the communication wiring when the power is on.

Do not connect the power supply cable to the communication terminal; otherwise, the main control board may be damaged.

The standard value of the screw torque of the communication wiring terminal is 0.37 ft-lbs (0.5 N·m). Insufficient torque may cause poor contact; excessive torque may damage the screws and power supply terminals.

Do not bundle the communication wiring with the refrigerant pipeline, power supply cable, etc. When the power supply cable and the communication wiring are laid in parallel, a distance of more than 5cm should be maintained to prevent interference from the signal source.

Bonding and connecting the communication wiring should be avoided, but if it is used, at the very least, ensure a reliable connection by crimping or soldering and make sure the copper wire at the connection is not exposed; otherwise, communication failure may occur.

b. Indoor unit and outdoor unit communication cable connection

Single unit: M1 and M2 ports are located at terminal block "CN10" of the main control board. There is no distinction between negative and positive electrodes. For details, see Fig 59:

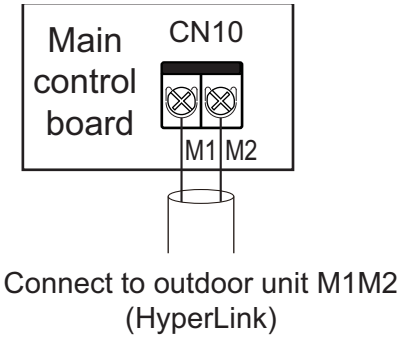

Fig. 59 —Single Unit

⚠ CAUTION

Do not connect the HyperLink (M1M2) communication wiring to the D1D2 communication wiring.

System: The HyperLink (M1M2) communication wiring between indoor unit and outdoor unit can reach a length of up to 6561.68 ft (2000 m), supporting any topology connection. Fig. 60 shows a serial connection:

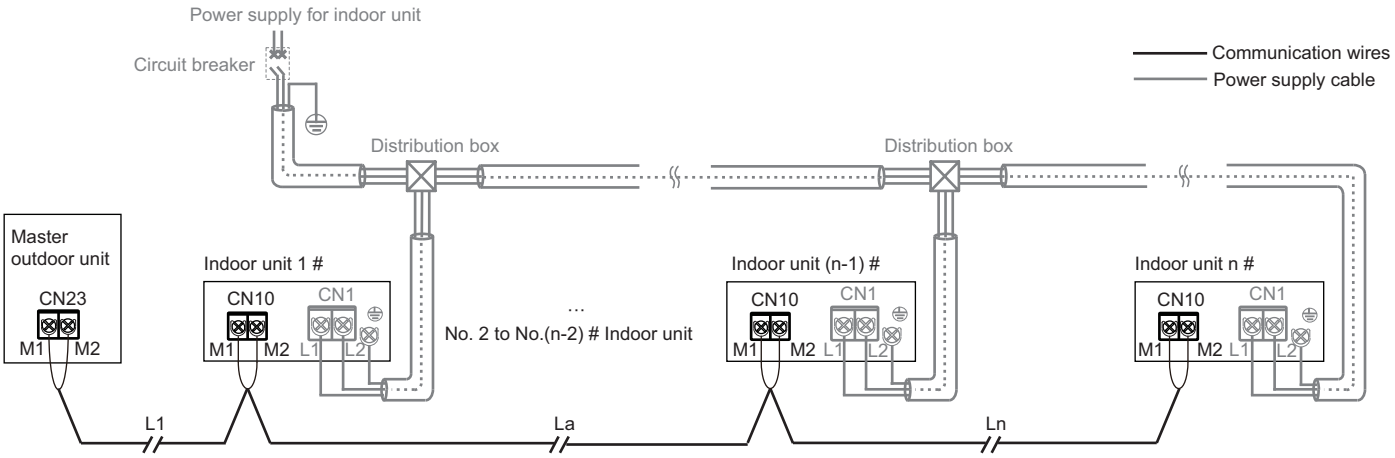

Fig. 60 —System

L1 + La + Ln ≤ 78-3/4 in (2000 m)

For other connection methods (tree topology, star topology, ring topology), refer to the technical manual or consult technical personnel.

c. X1/X2 communication cable connection

The X1X2 communication wiring is mainly connected to the wired controller to achieve one controller per indoor unit and two controllers per indoor unit. The total length of the X1X2 communication wiring can reach 656 feet (200 meters). Use shielded wires, but the shield layer cannot be grounded. X1 and X2 ports are located at terminal block "CN3" of the main control board. There is no distinction between negative and positive electrodes. For details, see the Fig 61:

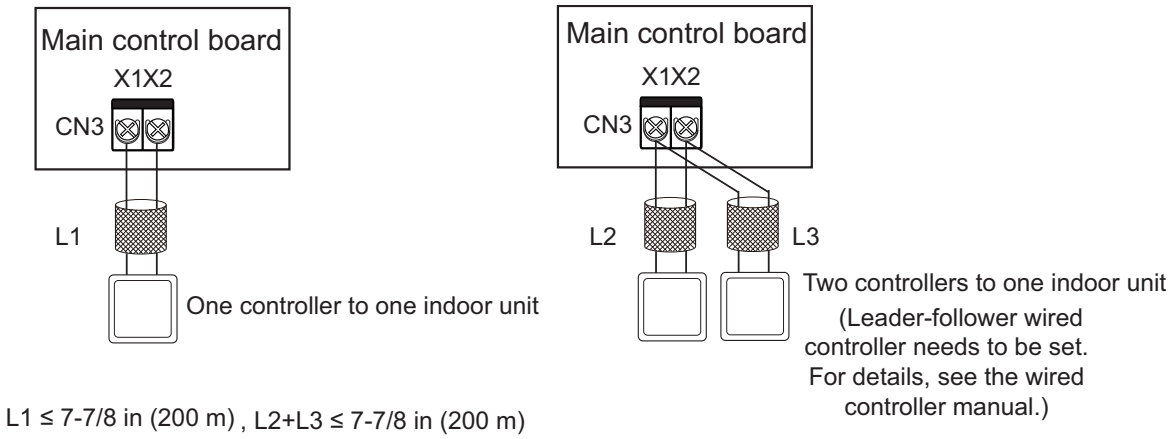

Fig. 61 —X1/X2 Communication Cable Connection

CAUTION

Two wired controllers of the same model can be used to control one indoor unit at the same time. In this case, need to set one controller to be the header and the other to be the follower. For details, see the wired controller manual.

d. D1D2 communication wiring connection (limited to outdoor unit and system configuration)

Achieving one-to-multiple and two-to-multiple functions of indoor unit wired controller through D1D2 communication (maximum of 16 sets). D1D2 communication is 485 communication. The one-to-more and two-to-more functions of the indoor unit wired controller can be achieved through D1D2 communication, as shown in Fig 62:

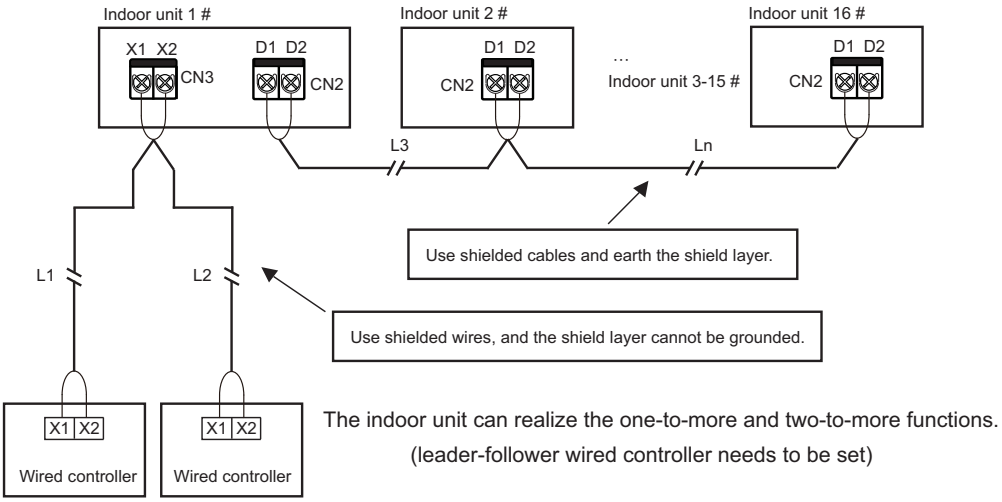

L1 + L2 ≤ 7-7/8 in (200 m), L3 + Ln ≤ 1 47-1/4 in (200 m)

Fig. 62 —One-to-Multiple and Two-to-Multiple Functions

CAUTION

When the indoor units in the same refrigerant system are V8 indoor units, D1D2 communication can enable one-to-multiple and two-to-multiple functions of the indoor unit wired controller.

To enable two-to-multiple functions, wired controllers must be of the same model.

5. Switch module setting

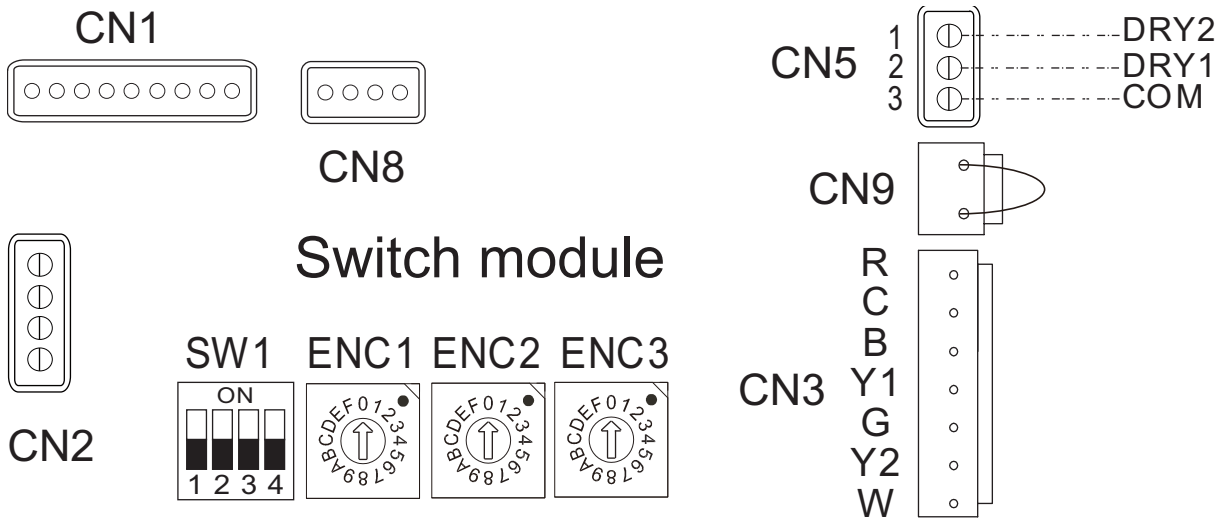

Fig. 63 —Layout of Switch Module

Table 16 — Port Definition and Function Description

No.	Port	Attribute	Function
1	CN8	Input	Connect the A2L refrigerant leakage
2	CN9	Input	Short circuit, No function definition
3	CN5	Output	A passive multi-function dry contact corresponds to an ENC1 dip drive. The function definition depends on the dip switch
4	CN1	Output	Connect to the indoor unit main board CN18 for communication between the Switch module and the main board
5	CN2-E1	Communication	Connect the CN1-E1 port of the expansion board for communication between the switch module and the expansion board
	CN2-E2		Connect the CN1-E2 port of the expansion board for communication between the switch module and the expansion board
	CN2-GND		Connect the CN10-GND port of the expansion board
	CN2-+12V		Connect the CN10-+ 12 V port of the expansion board to supply power for the CN10 port of the expansion board
6	SW1-1	Setting	These are used to set the MS address combined with ENC2. All 0s do not take effect
	SW1-2		
	SW1-3	Setting	Reserve
	SW1-4	Setting	OFF: 24 V thermostat disable, ON: 24 V thermostat enable
	ENC1	Setting	Multi-function dry contact definition
	ENC2	Setting	These are used to set the MS address combined with SW1-1 and SW1-2. All 0s do not take effect.
	ENC3	Setting	Heat recovery device MS tube number set

Table 17 — LED1 and LED3 Indicator Description

No.	Definition	Display	Description
LED1	Refrigerant sensor communication indicator (green)	OFF	No communication history between the switch module and the refrigerant sensor
		Stays ON	Normal communication between the switch module and the refrigerant sensor
		Blink	Abnormal communication between the switch module and refrigerant sensor
LED2	Communication indicator (red)	OFF	Communication between the switch module and the indoor unit main control board fails
		Stays ON	Normal communication between the switch module and the indoor unit main control board
		Blink	Abnormal communication between the switch module and indoor unit main control board

ENC1/ENC2/ENC3, DRY1, DRY2 Functions

There are three switches on the switch module: ENC1, ENC2 and ENC3.

The CN3 port of the communication switching board has two output dry contacts: dry contact 1 (DRY1), dry contact 2 (DRY2).

DRY 1: Fan Output dry contact, which can be connected to devices such as air valves, new fans, and exhaust fans.

Dry 2: multi-function dry contact. The specific logic varies according to the dip switch value of ENC 1. The corresponding logic takes effect only after the Switch value is set to a function and the indoor unit is powered on again.

Table 18 — ENC1/ENC2/ENC3, DRY1, DRY2 Functions

ENC1	Dry2 Signal Type	Display	Common External Device
0	Invalid setting	/	/
1	Indoor unit fan status output	ON/OFF ≤ 24 V DC/AC 1A	Air valve, FAPU, Air discharge device
2	Shutdown/ non- shutdown output	ON/OFF ≤ 24 V DC/AC 1A	FAPU
3	Third-party heater output (air duct installed inside)	ON/OFF ≤ 24 V DC/AC 1A	Electric heating Tube
4	Fault alarm output	ON/OFF ≤ 24 V DC/AC 1A	Alarm equipment
5	Third-party humidifier control	ON/OFF ≤ 24 V DC/AC 1A	Humidifier
6	Dehumidifier control	ON/OFF ≤ 24 V DC/AC 1A	Dehumidifier
7	Preheater control	ON/OFF ≤ 24 V DC/AC 1A	Fresh air preheater
8	Third-party heater output (air ducts installed outside)	ON/OFF ≤ 24 V DC/AC 1A	Wall-mounted heater
9	Cooling operation output	ON/OFF ≤ 24 V DC/AC 1A	External device
A	Heating operation output	ON/OFF ≤ 24 V DC/AC 1A	External device
B	Human detection sensor status output	ON/OFF ≤ 24 V DC/AC 1A	Indicator /window off control
C	Defrosting operation output	ON/OFF ≤ 24 V DC/AC 1A	External device
D	Economizer control	ON/OFF ≤ 24 V DC/AC 1A	Air-side economizer
E	Invalid setting	/	/
F	Invalid setting	/	/

24 V Thermostat Function (SW1-4 ON)

Check whether the DIP switch is correct according to the wiring nameplate after the electrical wiring is complete. In the switch settings, when there is Y1 or G signal, running at the lower speed, when there is Y1+Y2 signal, running at the high speed.

The factory default will prevent cold air from blowing into the room as the initial stage of heating.

Table 19 — 24 V Thermostat Function (SW1-4 ON)

	MODE	Y or G (MIN)	Y1 + Y2 (MAX)
FAN SPEED	COOL	4	7
	HEAT	4	7

NOTE: 24 V linear transformer needs to be provided by the customer on site.

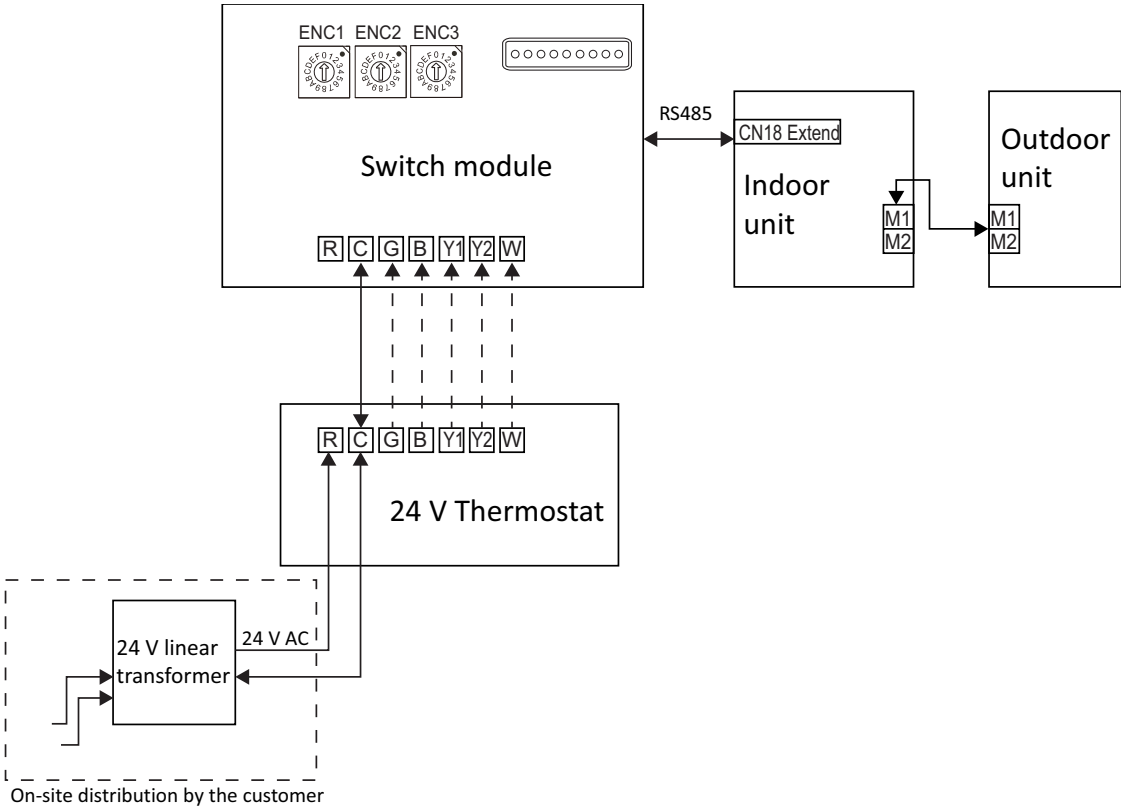

Fig. 64 —Wiring Diagram

6. External board connection (limited to outdoor unit and system configuration)

The external boards are connection module outside the main control board, including a display box, 1 # Expansion board and 2 # Expansion board.

a. Connection of Display Panel

The display panel is connected to the main control board through a 4-core cable, and is connected to the "CN30" socket of the main control board, as shown in Fig 65:

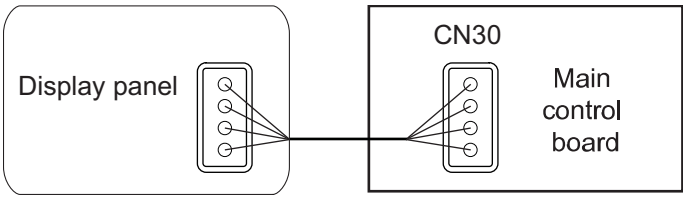

Fig. 65 —Display Panel Connection

b. Expansion Boards Connection

Expansion boards can communicate with the main control board through the Switch board. Use one or both of the two expansion boards.The wiring figures are shown in Fig 66:

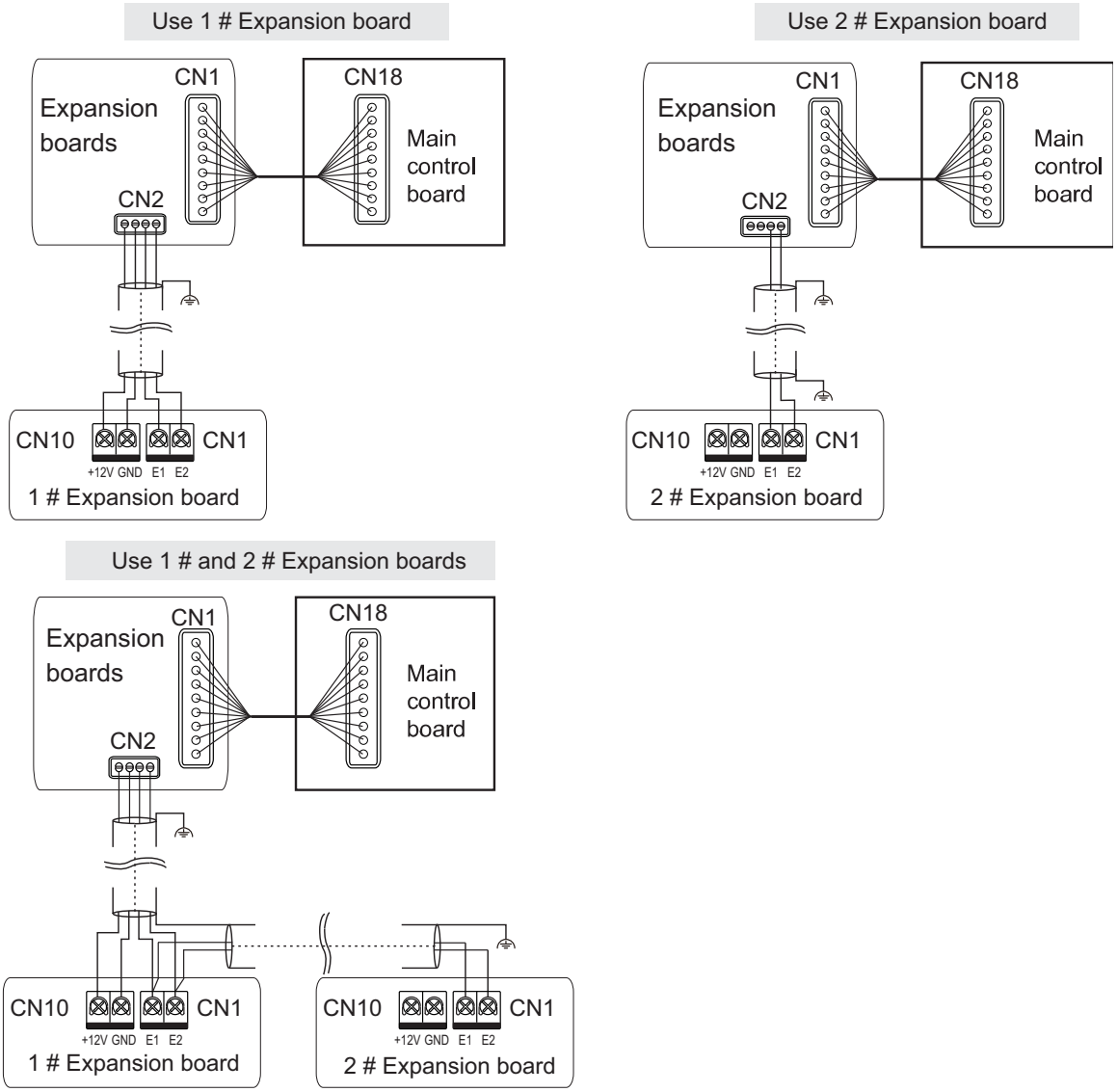

Fig. 66 —Expansion Boards Connection

NOTE: For the function introduction of the 1 # Expansion boards and 2 # Expansion boards, refer to the function module manual.

7. Alarm Signal Module

Refer to Fig. 67 for the wiring of alarm signal module.

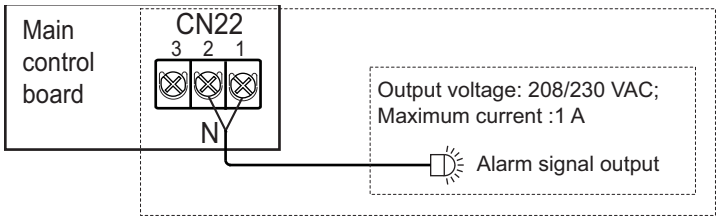

Fig. 67 —Alarm Signal Wiring Module

CAUTION

The output voltage is 208/230 V~.

8. Remote On/Off Control

Refer to Fig. 68 for using Remote On/Off control.

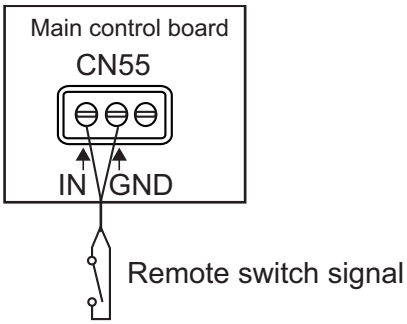

Remote Switch	Air Conditioning System
On	Off
Off	On

Fig. 68 —Remote On/Off Control

NOTE:

The priority of remote control is higher than that of the wired controller.

More remote control functions, such as delayed control, air conditioning system is on when remote control is on, refer to the Wired Controller manual.

9. Re-Close the Electric Control Box Cover

The connected power supply cable should be routed outside the cable conduit, and close the electric control box cover again.

CAUTION

Do not cover the electric control box during power-on.

When covering the electric control box, arrange the cables carefully and do not clip the connecting wires on the electric control box cover.

ERROR CODES

The error code is displayed on the display box and the wired controller display.

Table 20 — Error Codes and Definitions

Definition	Error code	Digital display
Emergency stop	A01	A01
R454B refrigerant leaks, ⚠ **DANGER** requiring shutdown immediately	A11	A11
Outdoor unit fault	A51	A51
Interlocking control Heat Recovery Ventilation Unit fault(in-series application)	A71	A71
The Humidity Unit fault	A72	A72
Interlocking control Heat Recovery Ventilation Unit fault（non-serial application)	A73	A73
The AHU Kit slave unit fault	A74	A74
Self-check fault	A81	A81
MS (refrigerant flow direction switching device) fault	A82	A82
Mode conflict	A91	A91
1# EEV coil fault	b11	b11
1# EEV body fault	b12	b12
2# EEV coil fault	b13	b13
2# EEV body fault	b14	b14
Protection on 1 # water pump	b34	b34
Protection on 2 # water pump	b35	b35
Water level switch alarm	b36	b36
Reheating electric heater fault	b71	b71
Preprocessing electric heater fault	b72	b72
Humidifier fault	b81	b81
Duplicate indoor unit address code	C11	C11
Abnormal communication between the indoor unit and outdoor unit	C21	C21

Definition	Error code	Digital display
Abnormal communication between the indoor unit main control board and fan drive board	C41	C41
Abnormal communication between the indoor unit and wired controller	C51	C51
Abnormal communication between the indoor unit and Wi-Fi Kit	C52	C52
Abnormal communication between the indoor unit main control board and display board	C61	C61
Abnormal communication between the AHU Kit slave unit and master unit	C71	C71
Number of AHU Kits is not the same as the set number	C72	C72
Abnormal communication between the linked humidifying indoor unit and master indoor unit	C73	C73
Abnormal communication between the linked FAPU and master indoor unit (series setting)	C74	C74
Abnormal communication between the linked FAPU and master indoor unit (non-series setting)	C75	C75
Abnormal communication between the main wired controller and secondary wired controller	C76	C76
Abnormal communication between the indoor unit main control board and 1 # Expansion board	C77	C77
Abnormal communication between the indoor unit main control board and 2 # Expansion board	C78	C78
Abnormal communication between the indoor unit main control board and Switch board	C79	C79
The indoor unit is in power-off state	C81	C81
Air inlet temperature of the indoor unit is too low in heating mode	d16	d16
Air inlet temperature of the indoor unit is too high in cooling mode	d17	d17
Reminder for expiration of life of refrigerant leakage sensor	d43	d43
Alarm for exceeding temperature and humidity range	d81	d81
Sensor control board fault	dE1	dE1
PM2.5 sensor fault	dE2	dE2
CO_2 sensor fault	dE3	dE3
Formaldehyde sensor fault	dE4	dE4
Human Detect sensor fault	dE5	dE5
T0 (fresh inlet air temperature sensor) short-circuits or cuts off	E21	E21
The upper dry bulb temperature sensor short-circuits or cuts off	E22	E22
The lower dry bulb temperature sensor short-circuits or cuts off	E23	E23

Definition	Error code	Digital display
T1 (Indoor unit return air temperature sensor) short-circuits or cuts off	E24	E24
The built-in room temperature sensor of the wired controller short-circuits or cuts off	E31	E31
The wireless temperature sensor short-circuits or cuts off	E32	E32
The external room temperature sensor short-circuits or cuts off	E33	E33
Tcp (pre-cooled fresh air temperature sensor) short-circuits or cuts off	E61	E61
Tph (pre-heated fresh air temperature sensor) short-circuits or cuts off	E62	E62
TA (outlet air temperature sensor) short-circuits or cuts off	E81	E81
Outlet air humidity sensor fault	EA1	EA1
Return air humidity sensor fault	EA2	EA2
Upper wet bulb sensor fault	EA3	EA3
Lower wet bulb sensor fault	EA4	EA4
R454B refrigerant leakage sensor fault	EC1	EC1
T2A (heat exchanger inlet temperature sensor) short-circuits or cuts off	F01	F01
T2 (heat exchanger middle temperature sensor) short-circuits or cuts off	F11	F11
T2 (heat exchanger middle temperature sensor) overtemperature protection	F12	F12
T2B (heat exchanger outlet temperature sensor) short-circuits or cuts off	F21	F21
Fan drive board input side overcurrent protection	P31	P31
At least 6 times P31 fault codes detected within 60 minutes	P34	P34
Power supply voltage is too low fault	P52	P52
Main control board EEPROM fault	P71	P71
Indoor unit display control board EEPROM fault	P72	P72
Locked (electronic lock)	U01	U01
Unit model code not set	U11	U11
Capacity(HP) code not set	U12	U12
Capacity(HP) code setting error	U14	U14
AHU Kit fan control input signal DIP setting error	U15	U15

Definition	Error code	Digital display
Address code not detected	U38	U38
Motor failed more than once	J01	J01
IPM (fan module) overcurrent protection	J1E	J1E
Instantaneous overcurrent protection for phase current	J11	J11
Low bus voltage fault	J3E	J3E
High bus voltage fault	J31	J31
Phase current sample bias error	J43	J43
Motor and indoor unit are unmatched	J45	J45
IPM and indoor unit are unmatched	J47	J47
Motor startup failure	J5E	J5E
Motor blocking protection	J52	J52
Speed control mode setting error	J55	J55
Phase lack protection of motor	J6E	J6E

•

Table 21 — Operating Status Codes and Definitions (Non-Error)

Definition	Code	Digital display
Oil return or preheating operation	d0	d0
Self-cleaning	dC	dC
Mode conflict	dd	dd
Defrosting	dF	dF
Outdoor unit running in heating mode	dH	dH
Static pressure detection	d51	d51
Remote shutdown	d61	d61
Indoor unit backup operation	d71	d71
outdoor unit backup operation	d72	d72
Main control program upgrading	OTA	otA

CAUTION

Error codes are displayed only for certain outdoor unit models and indoor unit configurations (including the wired controller and display box).

When the main control program is being upgraded, make sure that the indoor unit and outdoor unit remain powered on. Otherwise, the upgrading process will stop.

SETTINGS

Use the wired controller (for example, WDC3-120T2) to enter engineering settings:

- Parameters can be set in the power-on or power-off state.
- Hold "☰ " and ">" for 3 seconds to enter the parameter setting interface.
- After entering the parameter setting interface, Press "V" and "Λ" to switch the parameter. Set parameters according to the Table of Parameter Settings. Press "O" to enter the parameter setting interface. Then press "< " and "> " to change parameter value and press "O" to save changes.
- Press the "back" button to return to the previous page until exiting the parameter setting or exiting the parameter setting after 60 seconds without any operation.
- When it is in the parameter settings page, the wired controller does not respond to any remote control signal.

NOTE: For information such as the engineering menu of the wire controller, refer to the wire controller manual for details.

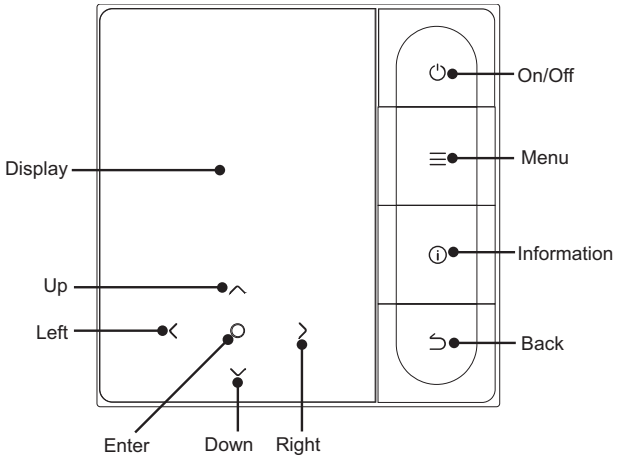

Fig. 69 —Settings

Table 22 — System Operating Status Query

No.	Displayed Content	Remarks
1	Communication address value (for communication with the outdoor unit)	When there are multiple addresses (an indoor unit with a large horsepower has both real and virtual addresses), the address digits will be displayed sequentially every 0.5 seconds; For example, if the indoor unit is assigned with 4 addresses, after the spot check starts, 01 - > 02 - > 03 - >04 will be displayed every 0.5 seconds and the displayed digit will finally stay at 04.
2	Capacity (HP)	
3	Temperature set by the user [°F(°C)]	
4	Temperature executed by the program [°F(°C)	
5	T1 - Value detected by the return air temperature sensor [°F(°C)	
6	Return air temperature corrected through program compensation [°F(°C)	
7	T2 - Value detected by the heat exchanger middle temperature sensor [°F(°C)	
8	T2A - Value detected by the heat exchanger liquid pipe temperature sensor [°F(°C)	
9	T2A - Value detected by the heat exchanger liquid pipe temperature sensor [°F(°C)]	
10	Humidity set by the user (RH, %)	
11	RH - Value detected by the RH sensor (%)	
12	Real-time static pressure value (Pa)	Only available for constant air flow models; For example, if the real-time static pressure value is 108 Pa and the display box or panel has a two-digit digital display, 108 will be displayed. If the display box or panel has a two-digit digital display, 10 will be displayed.
13	Value detected by the compressor discharge temperature sensor [°F(°C)]	
14	Target overheating [°F(°C)	
15	EXV pulse count = Displayed value × 8	If the displayed value is 40, the pulse count is 40 × 8 = 320.
16	Indoor unit main control PCB program version No.	For example,
17	Display box or panel PCB program version No.	1. If the program version is V49.4 and the display box or panel has a three-digit digital display, 494 will be displayed. If the display box or panel has a two-digit digital, 49 will be displayed. 2. If the program version is V49 and the display box or panel has a three-digit digital display, 491 will be displayed. If the display box or panel has a two-digital display, 49 will be displayed.
18	Fan drive version No.	
19	Historical error code 1	The historical error code 2 is triggered before the error code 1.
20	Historical error code 2	
21	Network address value	For connection to the centralized and gateway
22	Expansion board address	For example, When 00 > --- > 02 > --- > 04 is displayed, it indicates that the expansion board with the address digit 00/02/04 is connected, and the expansion board address is displayed in turn every 1 second.

ESP SETTING

Use the wired controller (for example, WDC3-120T2) to set the unit external static pressure, which can be divided into the following two situations:

Constant Speed Mode

Indoor units that are equipped with a constant air flow function are set to the constant air flow mode when they leave the factory. After the units are installed, they should undergo initial static pressure test before use. The steps are as follows:

Table 23 — Parameter Code

INDOOR UNIT SET ITEM	PARAMETER NAME	PARAMETER RANGE	DEFAULT VALUE	REMARKS
Energy saving option	Initial static pressure detection	00/01	00	00: Not reset initial static pressure; 01: Reset initial static pressure

AIR PRESSURE CURVES

Constant air flow - self-adaptive

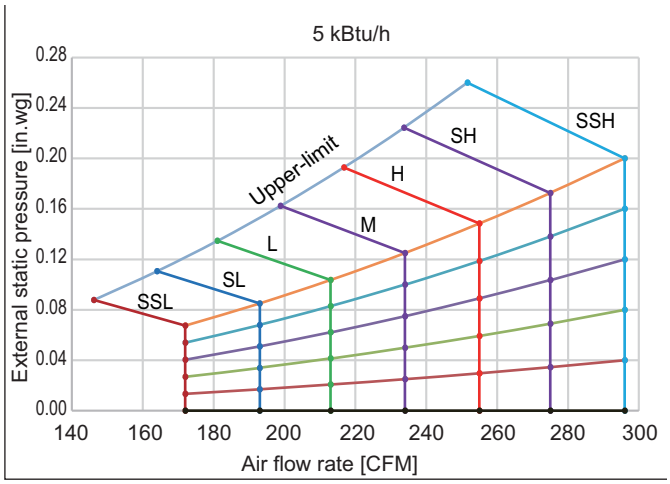

Fig. 70 —5 kBtu/h

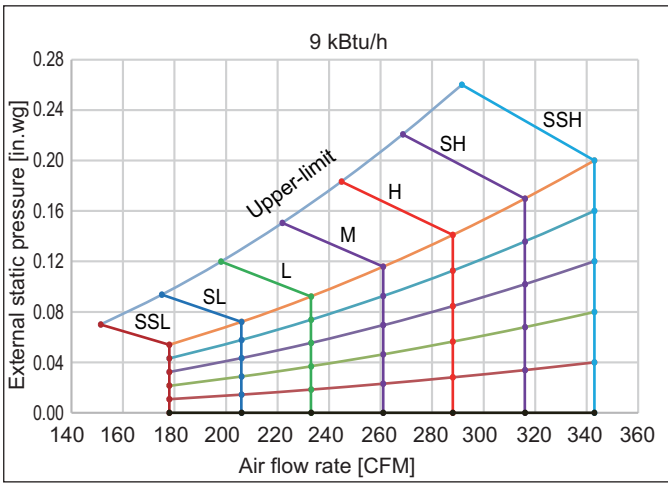

Fig. 72 —9 kBtu/h

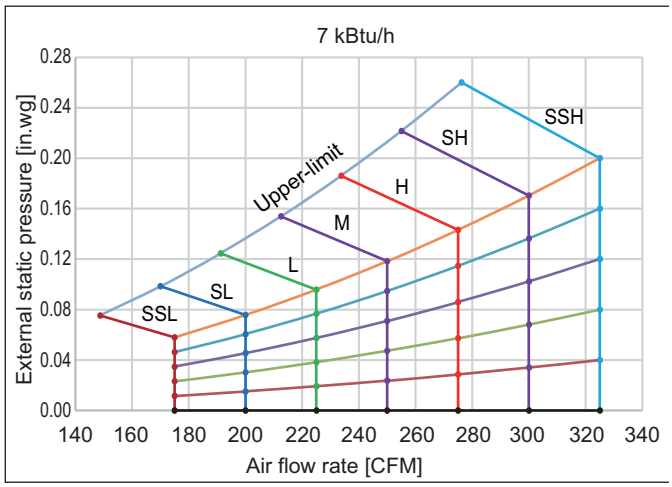

Fig. 71 —7 kBtu/h

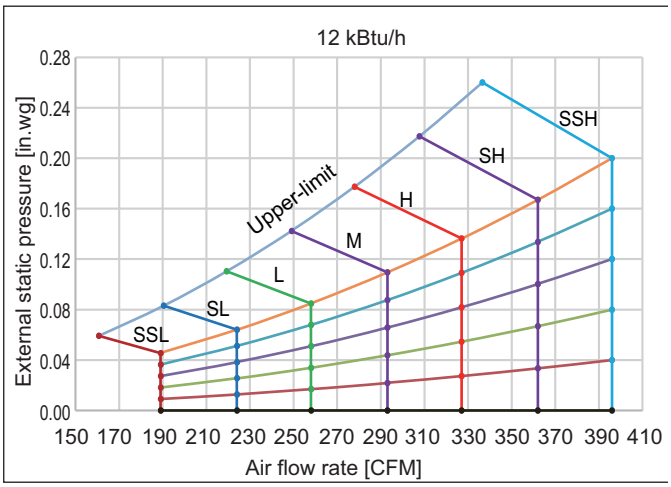

Fig. 73 —12 kBtu/h

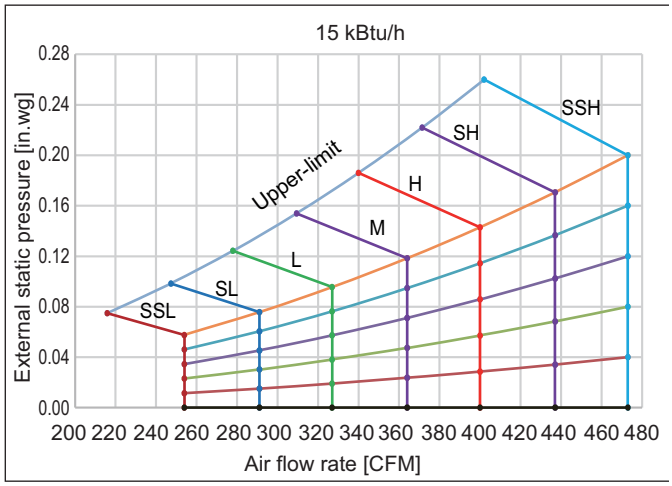

Fig. 74 —15 kBtu/h

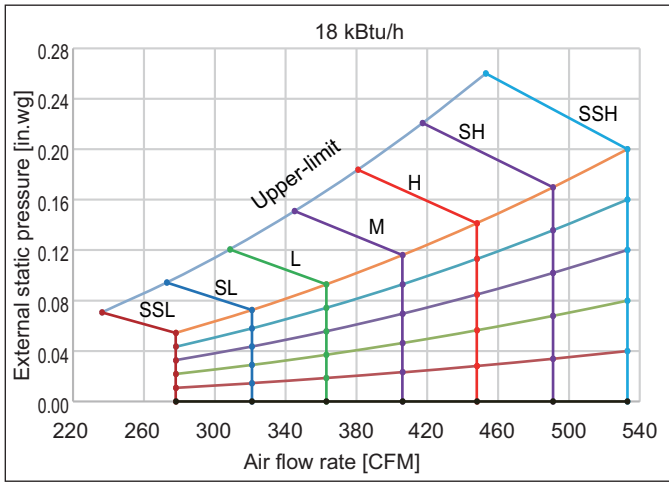

Fig. 75 —18 kBtu/h

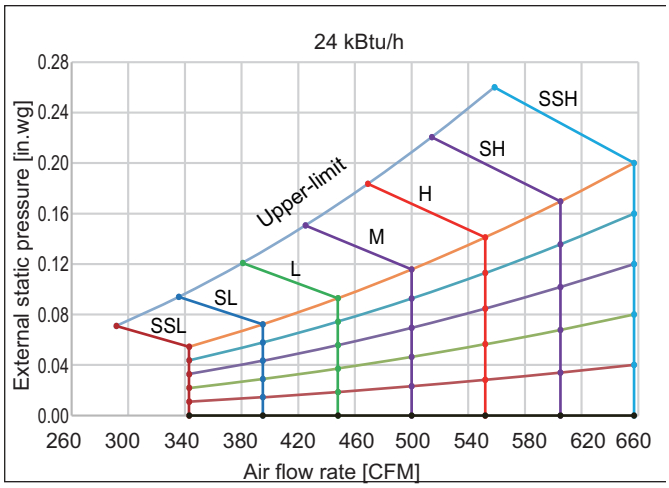

Fig. 76 —24 kBtu/h

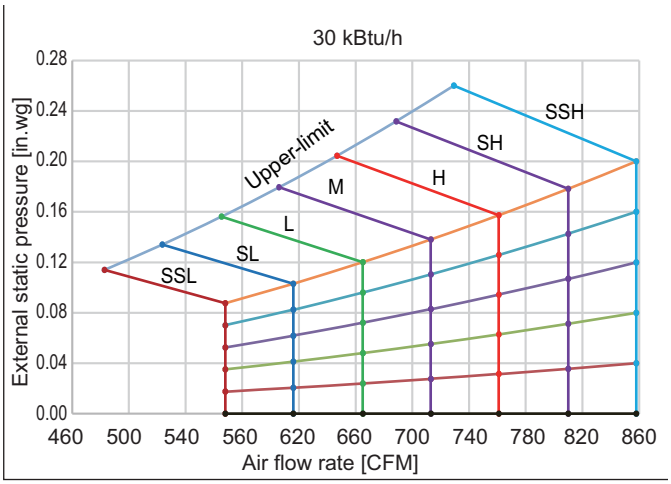

Fig. 77 —30 kBtu/h

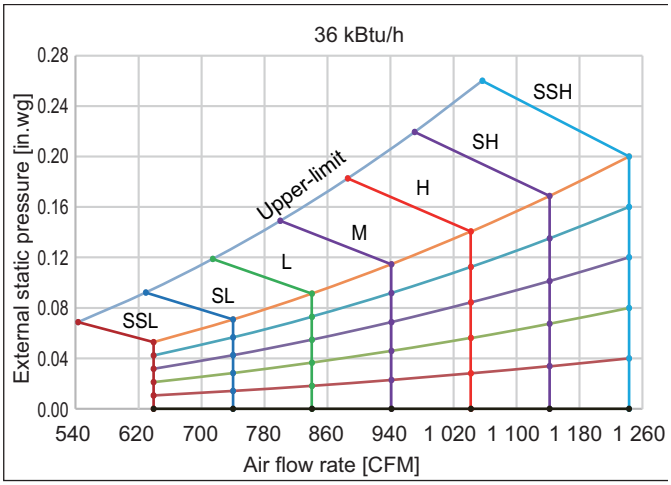

Fig. 78 —36 kBtu/h

⚠ CAUTION

The static pressure of the air duct should be taken into consideration when installing the unit. This model is not recommended if exceeding the specified static pressure range.

SSL, SL, L, M, H, SH, and SSH represent fan speeds from level 1 to level 7.

CONSTANT SPEED MODE

In this mode, the unit must be set to constant speed mode in “Set fan speed” item.

Table 24 — Constant Speed Mode

INDOOR UNIT SET ITEM	PARAMETER NAME	PARAMETER RANGE	DEFAULT VALUE	REMARKS
On-site settings	Indoor unit static pressure	00/01~19FF	FF	Indoor unit static pressure is set based on the parameter value

In constant speed mode, set the unit's external static pressure parameters to overcome the air outlet resistance. The steps are as follows:

Table 25 — Static Pressure Setting Parameter

UNIT POWER	Static Pressure Settings																			
kBtu/h HP	Level 00 Pa (in.wg)	Level 01 Pa (in.wg)	Level 02 Pa (in.wg)	Level 03 Pa (in.wg)	Level 04 Pa (in.wg)	Level 05 Pa (in.wg)	Level 06 Pa (in.wg)	Level 07 Pa (in.wg)	Level 08 Pa (in.wg)	Level 09 Pa (in.wg)	Level 10 Pa (in.wg)	Level 11 Pa (in.wg)	Level 12 Pa (in.wg)	Level 13 Pa (in.wg)	Level 14 Pa (in.wg)	Level 15 Pa (in.wg)	Level 16 Pa (in.wg)	Level 17 Pa (in.wg)	Level 18 Pa (in.wg)	Level 19 Pa (in.wg)
5 (0.6 HP)	10 (0.04)	20 (0.08)	30 (0.12)	40 (0.16)	50 (0.20)	50 (0.20)	50 (0.20)	50 (0.20)	50 (0.20)	50 (0.20)	50 (0.20)	50 (0.20)	50 (0.20)	50 (0.20)	50 (0.20)	50 (0.20)	50 (0.20)	50 (0.20)	50 (0.20)	50 (0.20)
7 (0.8 HP)																				
9 (1.0 HP)																				
12 (1.2 HP)																				
15 (1.7 HP)																				
18 (2.0 HP)																				
24 (2.5 HP)																				
30 (3.2 HP)																				
36 (4.0 HP)																				

AIR PRESSURE CURVES

Constant Speed

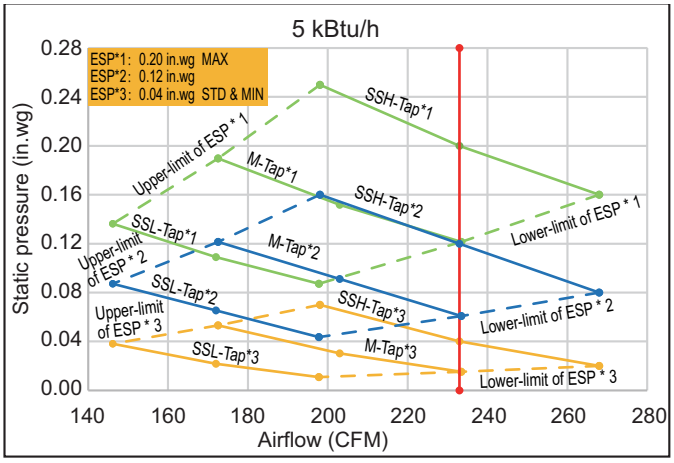

Fig. 79 —5K

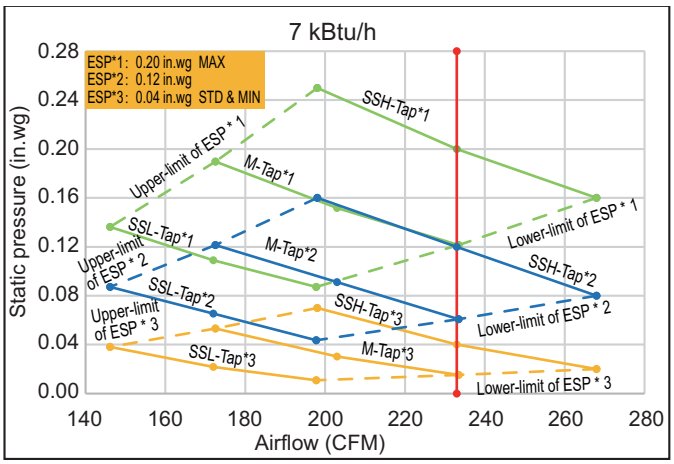

Fig. 80 —7K

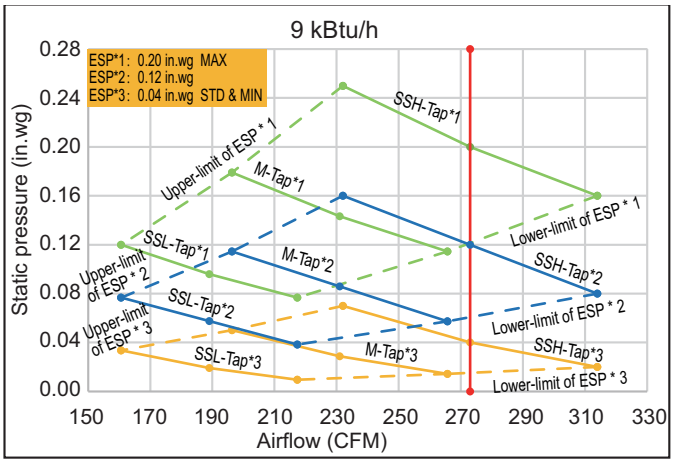

Fig. 81 —9K

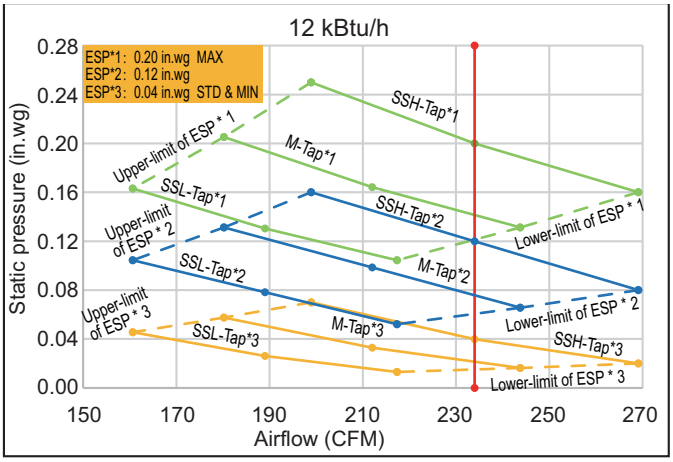

Fig. 82 —12K

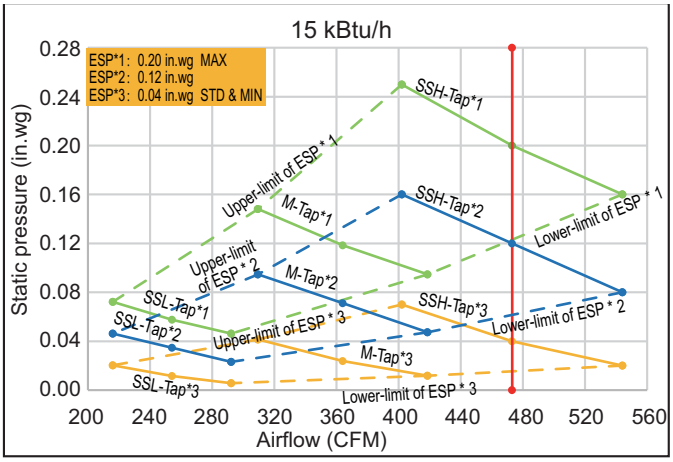

Fig. 83 —15K

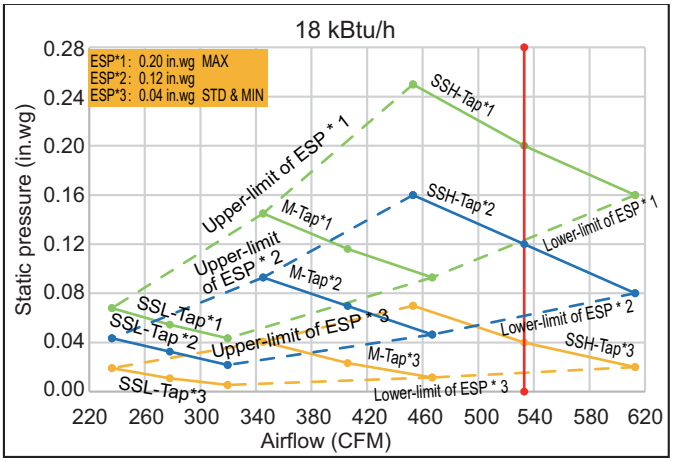

Fig. 84 —18K

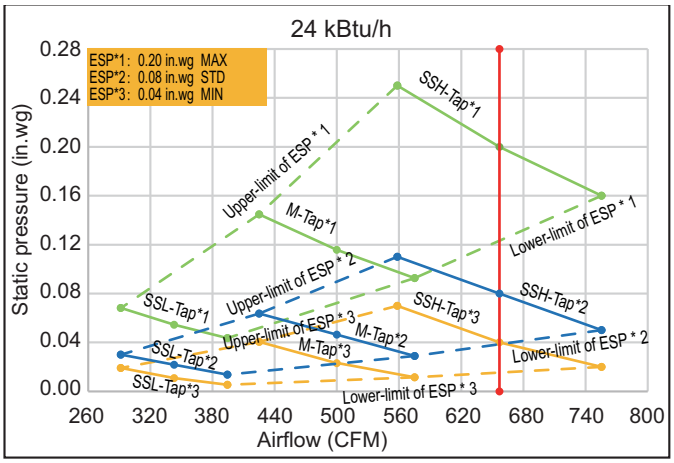

Fig. 85 —24K

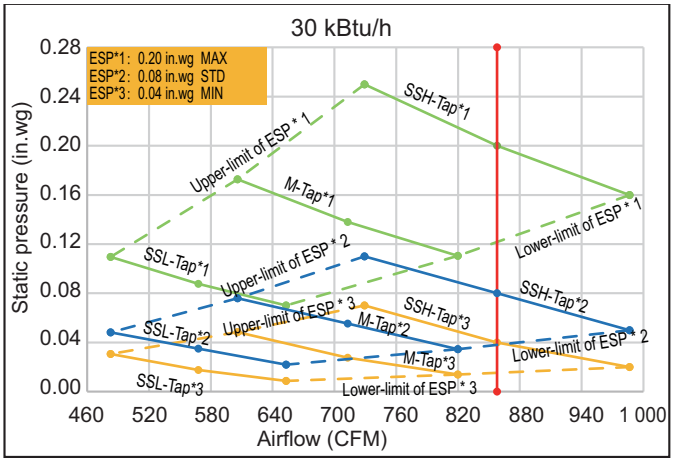

Fig. 86 —30K

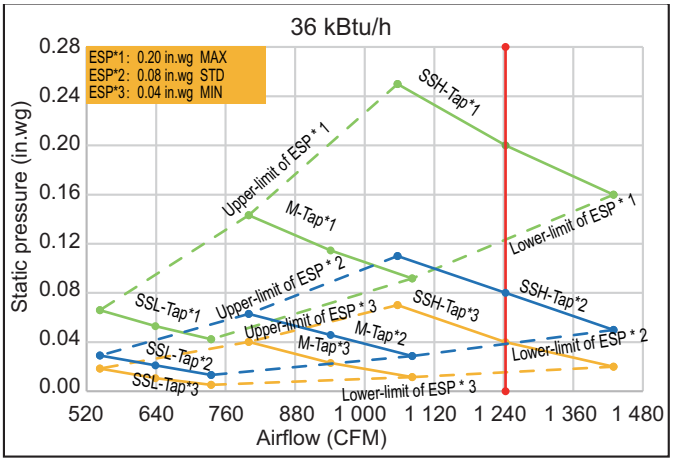

Fig. 87 —36K

SWITCH BETWEEN CONSTAT AIR FLOW AND CONSTANT SPEED

Indoor unit set item can switch these two situations:

- **Fan speed settings**
- **Air flow at fan speed 7”**

Table 26 — Switch Between Constant Air Flow and Constant Speed

INDOOR UNIT SET ITEM	PARAMETER NAME	PARAMETER RANGE	DEFAULT VALUE	REMARKS
Fan speed settings	Air flow at fan speed 7	00/01	01	00: Constant speed; 01: Constant air flow

NOTES:

- **Parameters can be set while the unit is powered on or powered off.**
- **On the parameter setting page, wired controller does not respond to a remote signal, and does not respond to the app remote control signal.**
- **When it is in the parameter settings page, the mode, fan speed, and switch buttons are invalid.**
- **Refer to the remote controller manual for the setting parameters of the remote controller.**
- **For other indoor unit parameter settings, refer to the manual of the wired controller.**

TEST RUN

Checklist Before Test Run

After the installation of the unit, check the items listed below first.

CAUTION

Do not power on the system.

Table 27 — Checklist Before Test Run

Pass/Fail	Checklist
	Read the complete installation and operation manual.
	Installation Check that the units are properly installed, to avoid abnormal noises and vibrations when starting up the units.
	Compressor and others shipping brackets removed.
	'The Piping Length' and 'Additional Refrigerant Charge' are calculated and recorded on the table of the unit.
	Be sure that the stop valves are open on both liquid and gas side.
	All Controllers installed and all control wiring is installed and properly connected at each terminal block.
	All drain piping is connected, including indoor units tie-in, and insulated as required.
	Refrigerant lines are completely insulated including flare nut connections at Indoor Units.
	All ductwork is connected and air filters installed.
	Air inlet/outlet Check that the air inlet and outlet of the unit is not obstructed by paper sheets, cardboard, or any other material.
	Field wiring Be sure that the field wiring has been carried out according to the instructions described in the manual and according to the applicable legislation.
	Grounding Be sure that the grounding wires have been connected properly and that the grounded terminals are tightened.
	Insulation test of the main power circuit Using a megatester for 500 V, check that the insulation resistance of 2 MΩ or more is attained by applying a voltage of 500 V DC between power terminals and ground. NEVER use the megatester for the communication wiring.
	Fuses, circuit breakers, or protection devices Check that the fuses, circuit breakers, or the locally installed protection devices are of the specified size and type. Do not bypass a fuse and a protection device.
	Internal wiring Visually check the electrical component box and the inside of the unit for loose connections or damaged electrical components.
	Components damage Check for damaged components and extruded piping inside the unit. Consistency Check between Refrigeration Pipelines and Communication wirings Check and confirm that the refrigerant piping and communication wirings connected to the indoor and outdoor units are belong to the same refrigeration system.
	Oil leak Check if there is oil leaking from the compressor and piping. If there is an oil leak, try to repair the leak. If the repair is not successful, please call the local agent.
	Refrigerant leak Check for refrigerant leaks inside the unit. If there is a refrigerant leak, try to repair the leak. If the repair is not successful, please call the local agent. Do not come into contact with the refrigerant leaking from the refrigerant piping connections. It may cause frostbite.
	Flammable refrigerant. If there is a refrigerant leak, keep ventilation to avoid the risk of refrigerant stagnating. If a leak is suspected, all naked flames shall be removed/extinguished. If a leakage of refrigerant is found which requires brazing, all of the refrigerant shall be recovered from the system, or isolated (by means of shut off valves) in a part of the system remote from the leak.
	Line Voltage is checked and verified to be within specified range for all system components.
	Power the outdoor units 12 hours before operation in order to have power running to the crankcase heater and to protect the compressor.

Indoor Unit

- **The wired/remote controller switch is operating normally.**
- **The display of the wired/remote controller is normal, the function keys work normally, the room temperature adjustment is normal, and the air flow and direction adjustment are normal.**
- **The LED indicator is on.**
- **Water drainage is normal.**
- **Check the indoor units one by one for normal operation, and the cooling and heating functions are normal without vibration or abnormal sound.**

Outdoor Unit

- **There are no vibrations or strange sounds during operation.**
- **The fan, noise and condensation do not affect the neighbors.**
- **There is no refrigerant leakage.**

NOTE: Refer to the "Symptoms That Are Not Faults" in the "Operation" section in this manual.

MAINTENANCE AND SERVICE

⚠ WARNING

SAFETY WARNING

- For safety reasons, always turn off the unit and turn off the power before cleaning the unit.
- Do not disassemble or repair the unit by yourself; otherwise, it may cause fire or other hazards.
- Only professional service personnel can carry out the maintenance.
- Do not use flammable or explosive materials (such as hair styling agents or pesticides) near the product.
- Do not use organic solvents such as paint thinner to clean this product; otherwise, it may cause cracks, electric shock or fire.
- Only qualified dealers and professionally qualified electricians can install the optional accessories.
- Be sure to use the optional accessories specified by local dealer.
- Improper installation by yourself may result in water leakage, electric shock or fire.
- Do not wash the unit with water; otherwise, it may cause an electric shock.
- Use a stable standing platform.

CLEANING

Cleaning the Air Filter

⚠ CAUTION

- Air filters can be used to remove dust or other particles from the air, and if clogged, the effectiveness of the unit will be greatly reduced. Therefore, be sure to clean the air filter frequently when using it for an extended period.
- For the indoor unit with constant speed mode, if it is installed in a place with a lot of dust, it is recommended that you clean the filter once a month. For indoor units with a constant air flow mode, clean the filter when you receive the reminder of the wired controller.
- If excess dirt makes the filter difficult to clean, replace the filter.
- Do not remove the air filter unless it is being cleaned; otherwise, it may cause malfunction.

Procedure

1. **Remove the air inlet grille.**
   For duct type air conditioners, open the air inlet grille as shown in Fig 88.

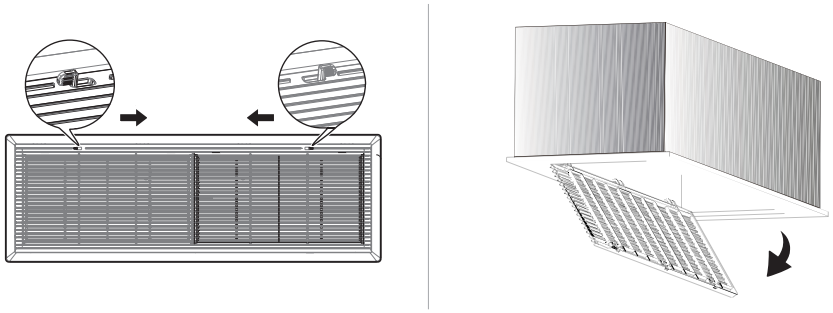

Fig. 88 —Remove Air Inlet Grille

2. **Remove the filter.**

NOTE: Only authorized installer or service agent can change and disassemble the filter. Any improper operations may cause electric shock or injuries due to touching rotating parts.

3. **Clean the filter.**

Clean the filter with a vacuum cleaner, with the air inlet side of the filter facing upwards.	Clean the filter with clean water (except for the activated carbon module), with the air inlet side of the filter facing downwards.
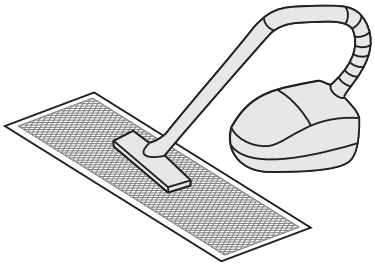	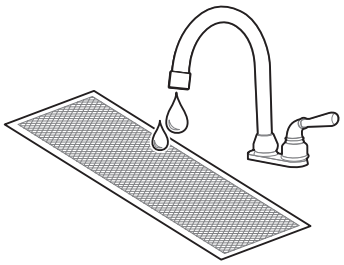

Fig. 89 —Clean the Filter

CAUTION

To avoid deformation of the filter, do not use fire or a burning appliance to dry the filter.

If the filter is dirty, use a soft brush and neutral detergent to clean it, then shake off the water and dry it in a cool place.

Non-professionals should not disassemble, replace or repair the filter.

4. **Reinstall the filter**
5. **Reinstall and close the air inlet grille by following steps 1 and 2 above in reverse.**

Cleaning Air Outlets and Exterior Panels

1. **Wipe the air outlet and panel with a dry cloth.**
2. **If a stain is hard to remove, clean it with clean water or neutral detergent.**

CAUTION

Do not use gasoline, benzene, volatile agents, decontamination powder or liquid insecticides. Otherwise, the air outlet or panel may become discolored or deformed.

Do not expose the inside of the indoor unit to moisture, as it may result in electric shock or fire.

When cleaning the louver with water, do not scrub it violently.

If the unit is used without an air filter, the accumulation of dust in the unit will often cause malfunctions due to the failure to remove dust from the indoor air.

Maintenance

- **During in-depth maintenance, the unit should be cleaned and maintained by professional technicians every 2 years to 3 years.**
- **For the indoor unit in constant speed mode, the primary efficiency filter is usually cleaned every three months.**

  When operating in a dusty environment, the air flow and capacity of the filter will decrease. The filter may even become blocked, and the unit performance and indoor air compromised.
- **Preheat the unit in advance.**

  When the heating season comes, power on the outdoor unit master unit for preheating more than 12 hours before use. The preheating time depends on the weather temperature. This can make the unit operate more stably and help the refrigeration oil in the unit compressor to maintain the best lubrication state, which can prolong the service life of the compressor.
- **Complete the following steps before the unit is put out of use for a long period:**
  a. If the unit is not in use for a long time due to seasonal changes, keep the unit running for 4 hours to 5 hours in fan mode until the unit becomes completely dry. Otherwise, it may grow mold indoors and have negative health effects.
  b. When not in use for a long time, power off or unplug the power plug to reduce standby power consumption, and wipe the wireless remote controller with a clean soft dry cloth and remove the battery.
  c. Turn on the power switch 12 hours before using the unit again. In addition, in seasons when units are frequently used, keep the power switch on. Otherwise, failures may occur.

CAUTION

Before the unit is idle for a long time, the internal components of the outdoor units should be checked and cleaned regularly. For more details, please contact the local unit customer service center or special technical service department.

Check the return air inlet and outlet of the outdoor unit and indoor unit after long periods of use to see if they are blocked; if an inlet/outlet is blocked, clean it immediately.

Wooden buildings, newly renovated houses, and frequent use of disinfectants may contain acidic components in the air, such as formic acid, acetic acid, and hypochlorous acid, which can corrode copper pipes and solder joints, leading to refrigerant leaks.

Factories, chemical plants, livestock farms, vegetable markets, sewage pits, and other environments may contain sulfides, acid gases such as sulfur dioxide, ammonia, and chlorides in the air, which can corrode copper pipes and solder joints, leading to refrigerant leaks.

These places may cause corrosion to the copper pipes and joints of the indoor unit, and it is necessary to have a professional inspection every six months.

ABOUT R454B REFRIGERANT SENSOR

R454B refrigerant sensor is configured for the indoor unit.

NOTE: Lifetime of the sensor is 15 years. The user interface displays error "d43" 3 months before the end of the sensor lifetime and error "EC1" after the end of the sensor lifetime. It should be replaced after the service life. For more information refer to the reference guide of the user interface and contact you dealer.

CAUTION

The refrigerant leakage sensor can only use the factory model or the specified model indicated in the corresponding manual.

The R454B refrigerant leakage sensor must be used to activate the refrigerant shut-off device, the alarm device, incorporated circulation airflow or other emergency controls, which shall give an electrical signal at a predetermined alarm set point in response to leaked refrigerant.

The installation of the refrigerant leakage sensor shall allow access for checking, repair or replacement by an authorized person.

The refrigerant leakage sensor shall be installed so its function can be verified easily.

The refrigerant leakage sensor shall be protected to prevent tampering or unauthorized resetting of the pre-set value.

To be effective, the refrigerant leakage sensor must be electrically powered at all times after installation, other than when servicing.

If the refrigerant leakage sensor detects a refrigerant leak, the fan will be turned on to the maximum, and the compressor will stop running. You should immediately leave the leak area and notify a professional for handling.

To ensure the detection accuracy of the refrigerant sensor, it is recommended to blow dust off the surface of the refrigerant sensor after it is used for a long time.

SERVICE

WARNING

Risk of electric shock. Can cause injury or death. Disconnect all remote electric power supplies before servicing hazardous voltage.

Disconnect all electric power including remote disconnects before servicing. Insure that all capacitors have discharged stored voltage.

Failure to do the above could result in death or serious injury.

CAUTION

Sharp edges. Avoid contact with coil fins and sheet metal edges.

Dismantle the Drain Pipe

The drain pan must first be removed during the maintenance of the internal parts. Dismantle the drain pan according to Figs. 90 and 91 (Make sure there is no residual water in the drain pan before dismantle it).

1. Dismantle the cover plate assembly.

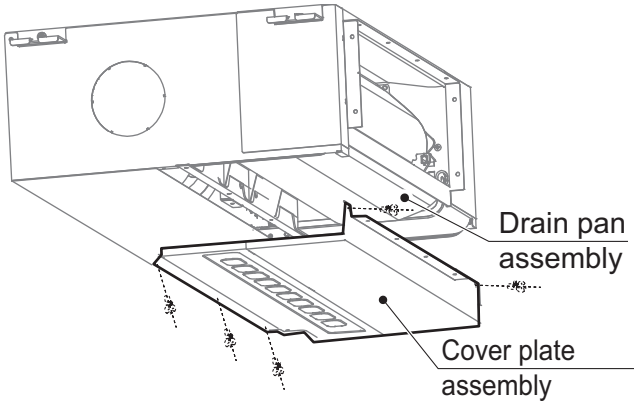

Fig. 90 —Dismantle Cover Plate Assembly

2. Rotate the drain pan assembly by 30 to 45 degrees around the drain pan's front edge.

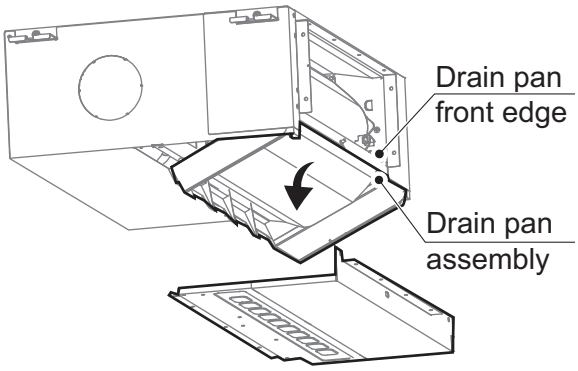

Fig. 91 —Rotate Drain Pan Assembly

3. Shift the drain pan assembly to the left by more than 1-1/8 in (30 mm).

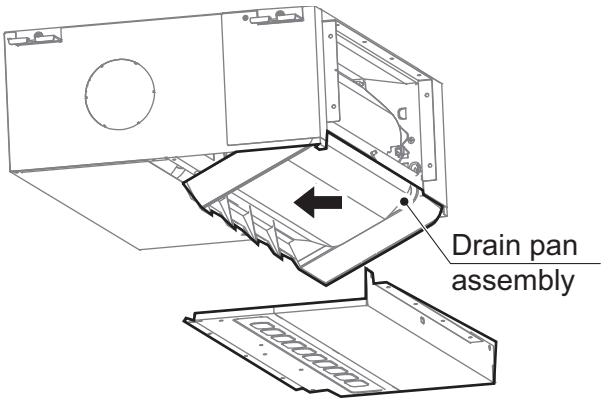

Fig. 92 —Shift Drain Pan to Left

4. Shift the drain pan downwards until the drain pan is removed from the unit body.

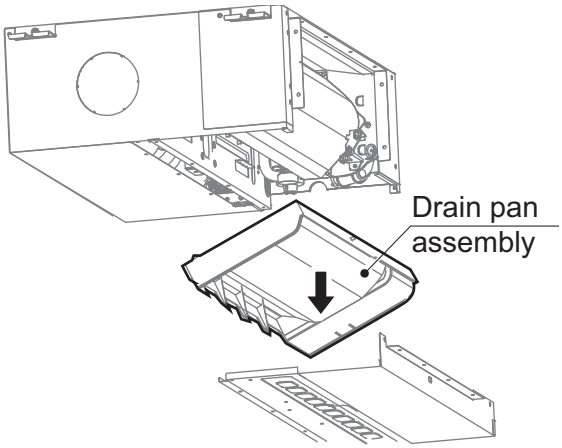

Fig. 93 —Shift Drain Pan Downward

Dismantle Wind Turbine, Gearbox, Coupling Shaft, Coupling, Bearing Housing, and Motor Disassembly

1. Remove the return air flange assembly.

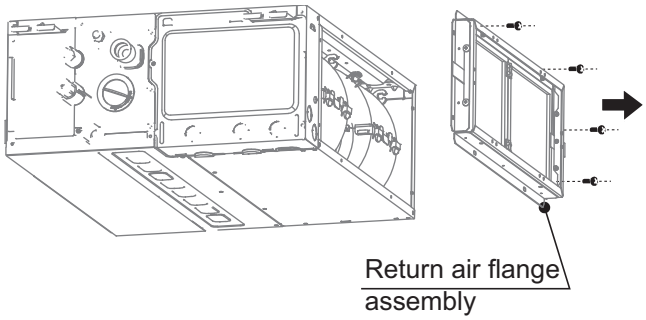

Fig. 94 —Remove Air Flange Assembly

2. Remove the return air cover plate, tear open the sealing sponge of the volute casing, and expose the maintenance hole in the middle of the volute casing.

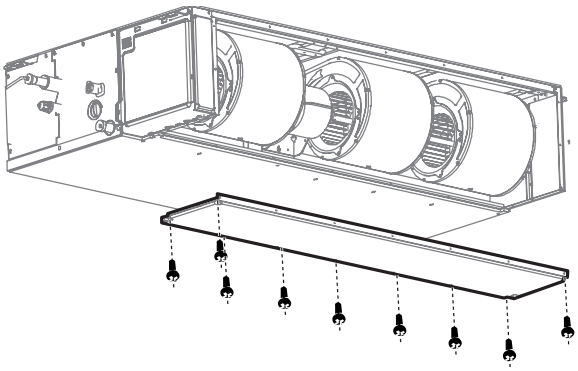

Fig. 95 —Remove Return Air Cover Plate

3. Press the buckle of the upper propeller casing, and rotate the lower propeller casing around the front edge of the lower propeller casing by about 30 degrees

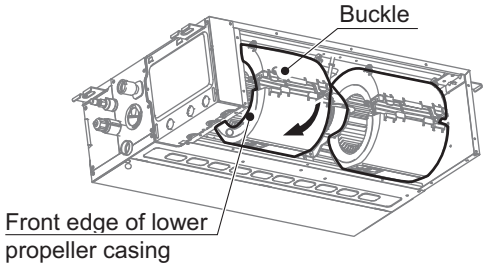

Fig. 96 —Rotate Lower Propeller Casing

4. Slanting downward, remove the lower propeller casing.

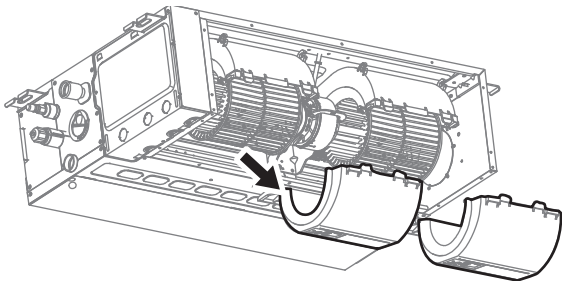

Fig. 97 —Remove Lower Propeller Casing

5. Loosen the screws on the upper propeller casing.

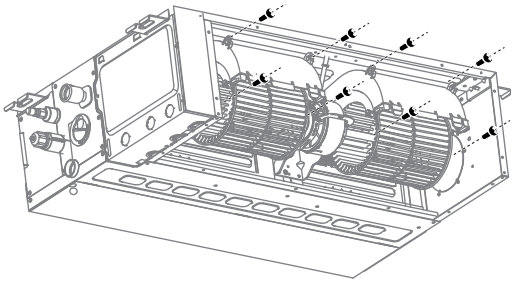

Fig. 98 —Loosen Screws on Upper Propeller Casing

6. Move the upper propeller casing 2 in (50 mm).

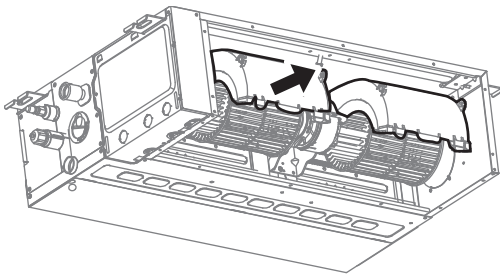

Fig. 99 —Move Upper Propeller Casing

7. Make the propeller casing rotate more than 90° downward along the wind wheel.

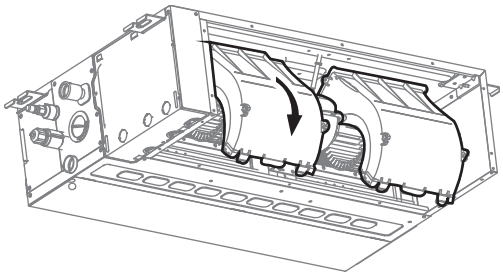

Fig. 100 —Rotate Propeller Casing more than 90 Degrees along Wind Wheel

8. Slanting downward, remove the upper propeller casing.

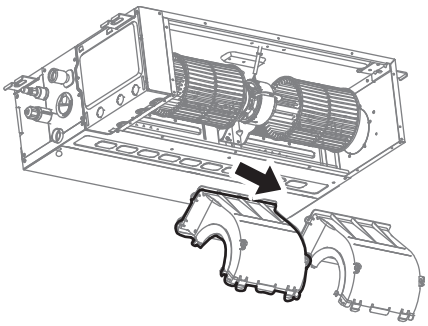

Fig. 101 —Remove Upper Propeller Casing

9. Loosen the fastening screws for the motor sealing plate.

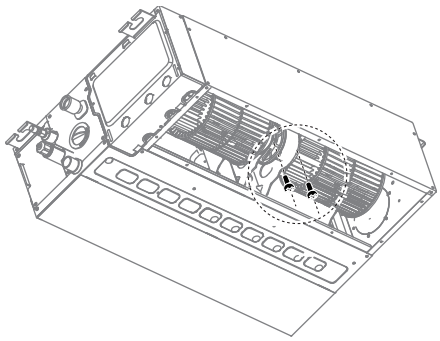

Fig. 102 —Loosen Fastening Screws for Motor Sealing Plate

10. Remove the motor and wind wheel together; unscrew the screws securing the wind wheel in place and remove the wind wheel and motor.

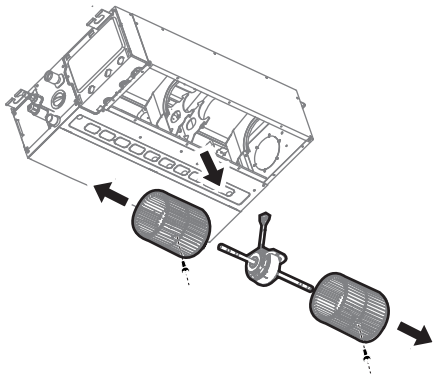

Fig. 103 —Remove Wind Wheel and Motor

CAUTION

Running the motor without load will cause system failure. If repairing or replacing the motor, the bower needs to be installed first before powering on for testing.

Dismantle the Drain Pump (with Water Pump), Temperature Sensor and Electronic Expansion Valve

1. Remove the screws on the water pump cover and pipe clamp board, and then remove the pipe clamp board, as shown in Fig. 104.
2. Unplug the pump and water level switch power supply.
3. Replace the drain pump assembly.

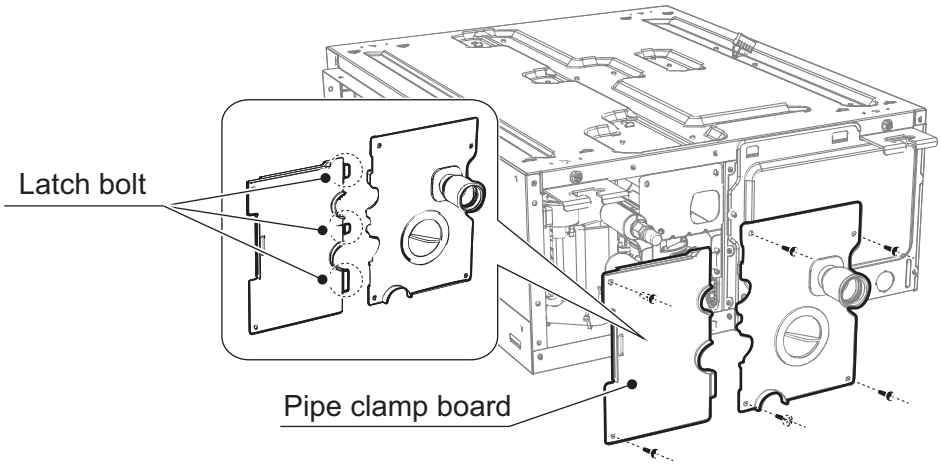

Fig. 104 —Replace Drain Plug Assembly

NOTE: During assembly, the latch bolt of the pipe clamp board shall be snapped into the bottom of the water pump cover.

Dismantle Main Control Board

1. Remove the electric control box cover.
2. Check the circuit, components and other problems or replace the main control board.
3. After replacing the main control board, use the after-sale tool to scan the QR code on the electric control box, and reset the parameter.

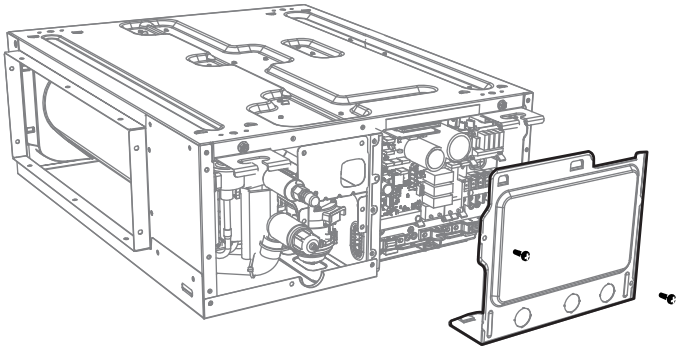

Fig. 105 —Remove Electric Control Box Cover and Check Circuit and Components

Dismantle Air Filter

The air filter can be removed from the bottom or both sides.

Loosen the screws, remove the fixing plate, and then pull out the filter.

1. Pull out the air filter from bottom.

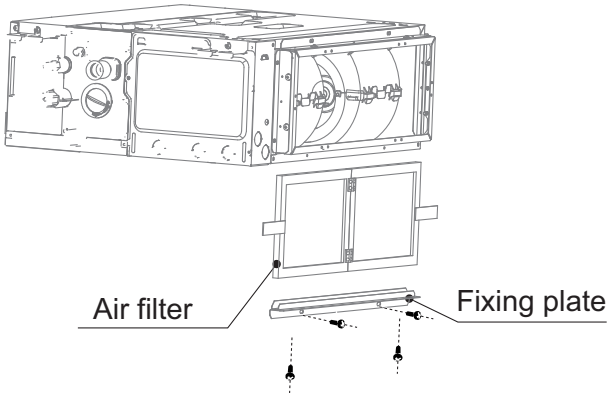

Fig. 106 —Pull Out Air Filter from Bottom

2. Pull out the air filter from the side.

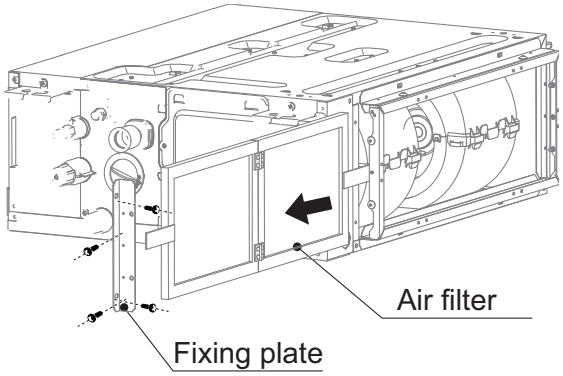

Fig. 107 —Pull Out Air Filter from Side

© 2025 Carrier. All rights reserved.

Manufacturer reserves the right to change, at any time, specifications and designs without notice and without obligations.