VRF Indoor Unit
40VMC007---3—Compact 4-Way Cassette

bryant
Heating & Cooling Systems

Submittal Data

Job Data _____ Location _____
Buyer _____ Buyer PO # _____ Carrier # _____
Unit Number _____ Model Number _____
Performance Data Certified By _____ Date _____

STANDARD FEATURES

- Delivers air in all four directions
- Three fan speeds - high, medium, and low
- Built-in condensate lift mechanism
- Condensate lift 23-5/8 inches
- Built in EXV (Electronic Expansion Valve) for installation ease
- No outside air connection
- Branch duct for supply (blank off required)
- Panel/grill (40VMC001----) - ordered separately

INDOOR UNIT MODEL		40VMC007---3
PERFORMANCE		
Total Cooling Rated Capacity	Btu/h	7,000
Sensible Cooling Capacity	Btu/h	6,100
Total Heating Rated Capacity	Btu/h	8,000
Airflow (H / M / L)	CFM	306 /282 / 229
Sound Pressure (H / M / L)	dBA	40.4 / 38.5 / 34.7
ELECTRICAL		
Power Supply	V/Ph/Hz	208-230/1/60
Indoor Fan Motor Power Consumption (Input)	W	16
Minimum Circuit Amps (MCA)	A	0.38
Maximum Overcurrent Protection	A	15.0
Motor Type		DC

PHYSICAL DATA		
Pipe Connection Size - Liquid	in.	1/4 (OD)
Pipe Connection Size - Suction	in.	1/2 (OD)
Pipe Connection Size - Drain	in.	1 (OD)
Refrigerant		R-410A
Unit Width	in.	24-3/4
Unit Height	in.	10-1/4
Unit Depth	in.	22-7/16
Unit Net Weight	lbs.	40.0
Panel Width	in.	25-1/2
Panel Height	in.	2
Panel Depth	in.	25-1/2
Panel Net Weight	lbs.	5.5

ACCESSORIES

- ☐ Wireless Remote Controller 40VM900001
- ☐ Wired Remote Controller - Non-Prog. 40VM900012
- ☐ Wired Remote Controller - Prog. 40VM900013
- ☐ Touch Screen Wired Controller 40VM900005
- ☐ 24V Controller 40VM900008
- ☐ Button Sensor 40VM900009

Manufacturer reserves the right to discontinue, or change at any time, specifications or designs without notice and without incurring obligations.

DIMENSIONAL DRAWING
INDOOR UNIT COMPACT 4-WAY CASSETTE 40VMC007---3

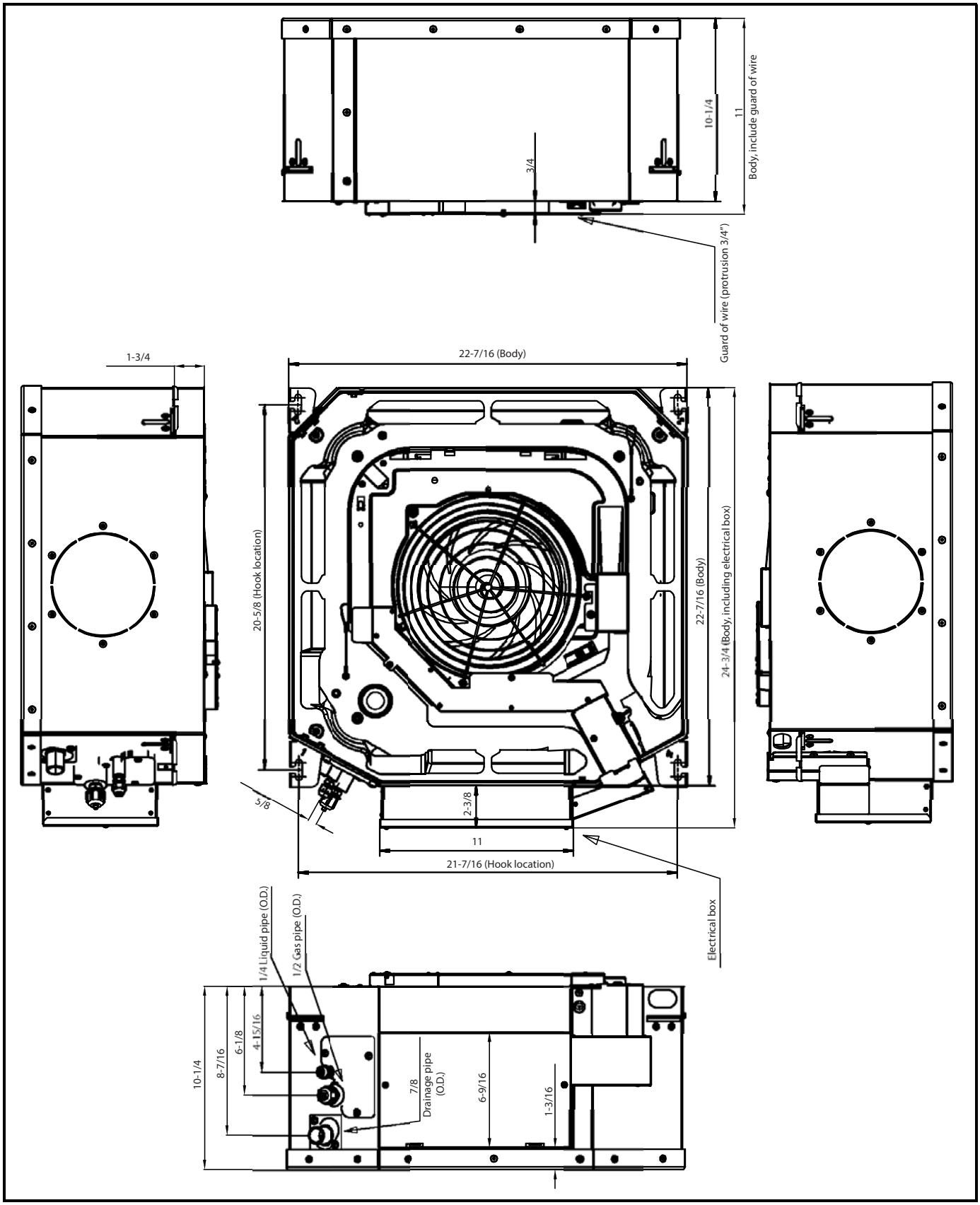

DIMENSIONAL DRAWING
INDOOR UNIT COMPACT 4-WAY CASSETTE 40VMC007---3

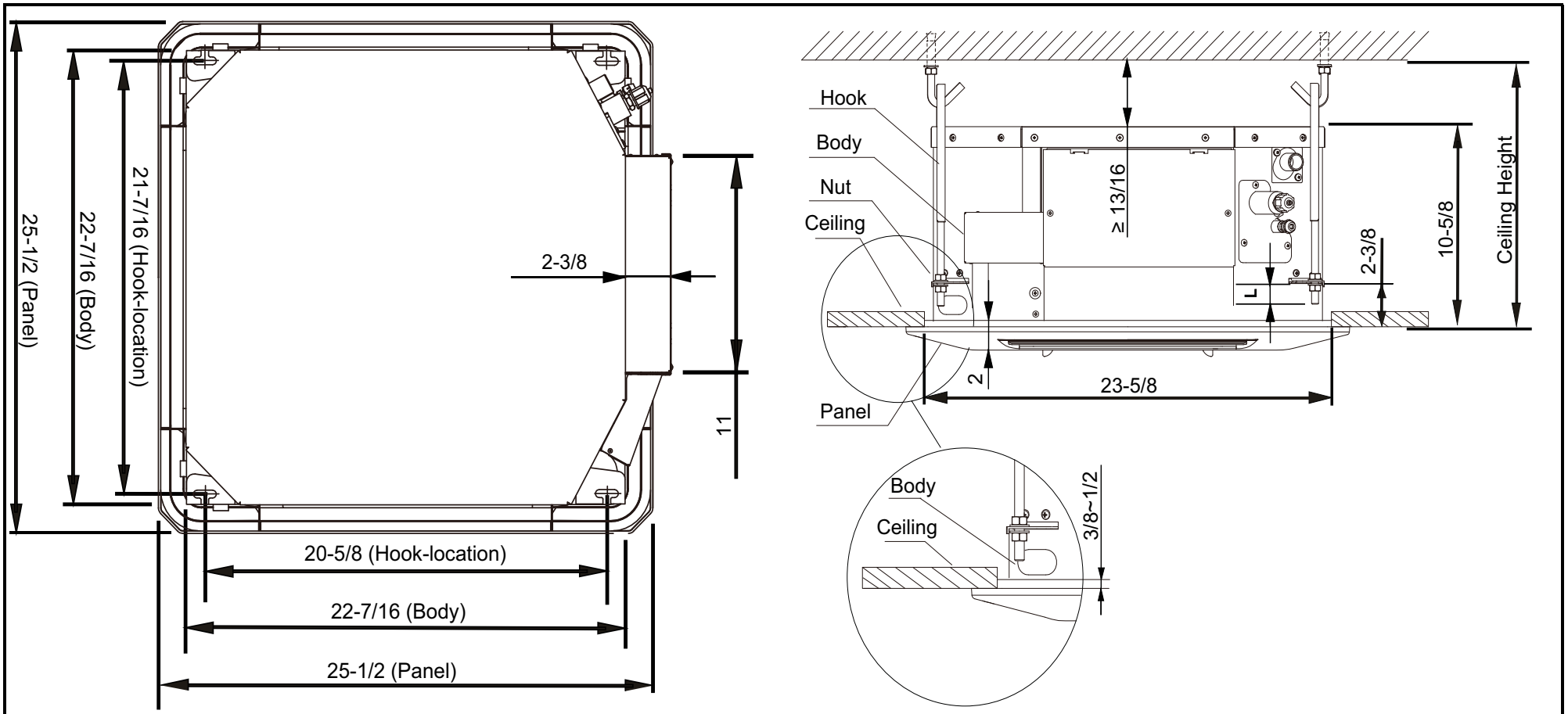

40VMC UNIT SIZE	DIMENSION (in.)
	L
007	1-13/16 ~ 1-1/2

NOTE: All dimensions shown in inches.

RECOMMENDED SERVICE CLEARANCE

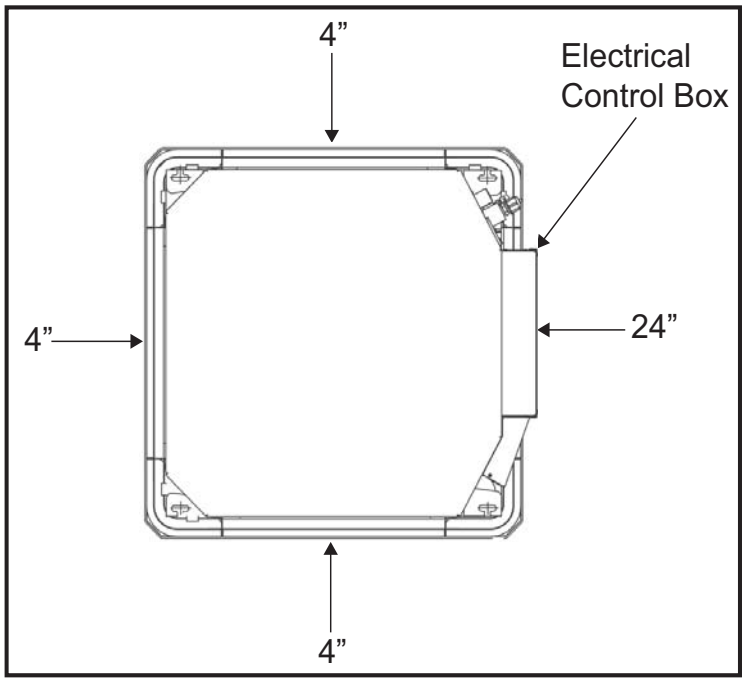

RECOMMENDED AIRFLOW CLEARANCE

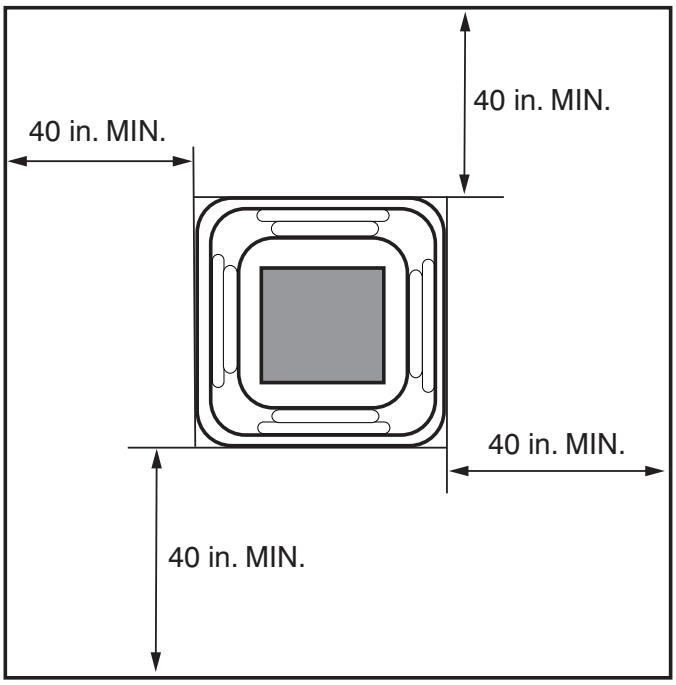

RECOMMENDED CLEARANCE FOR BLOCKING OFF LOUVERS / SUPPLY DUCT OPENING

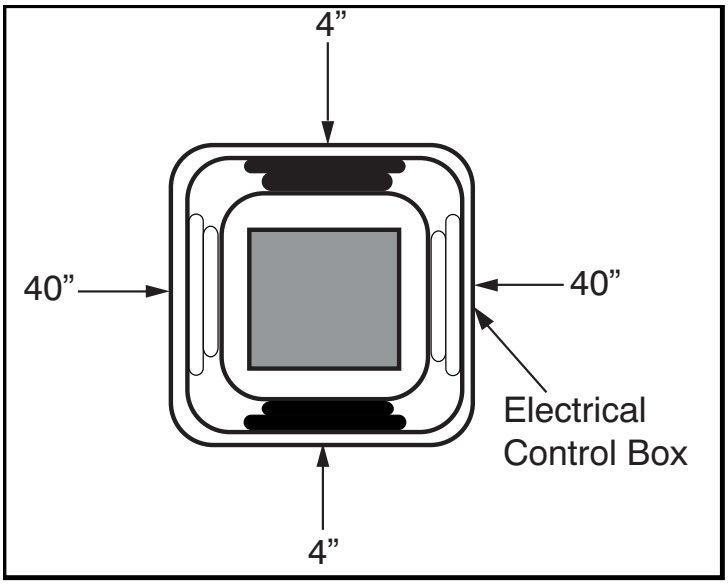

2 Supply Louvers Blocked Off

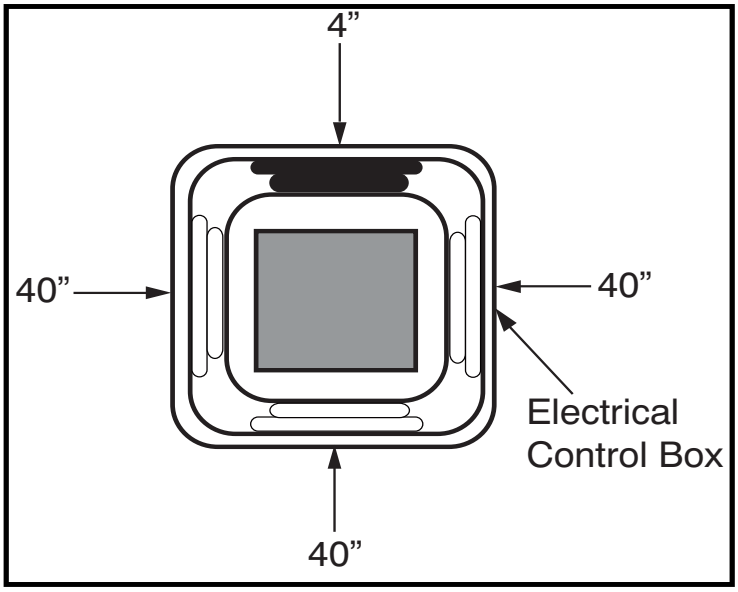

1 Supply Louvers Blocked Off

© Bryant Heating & Cooling Systems 2019