40VMF009A-048A
4-Way Cassette Indoor Unit for Variable Refrigerant Flow (VRF) Systems

Installation and Maintenance Instructions

CONTENTS

Page

SAFETY CONSIDERATIONS 1,2
GENERAL 2-5
INSTALLATION 6-15
Step 1 — Unpack and Inspect Units 6
- PROTECTING UNITS FROM DAMAGE
- PREPARING JOBSITE FOR UNIT INSTALLATION
- IDENTIFYING AND PREPARING UNITS

Step 2 — Position the Unit 6
Step 3 — Mount the Unit 7
- INSTALLING HANGER BOLTS
- MOUNTING UNIT
- INSTALLING PANEL

Step 4 — Connect Piping 8
- CONDENSATE PIPING
- REFRIGERANT PIPING

Step 5 — Complete Electrical Connections 9
Step 6 — Position and Connect Controller 11
ACB Interface 15
START-UP 15
Pre-Start Check 15
System Operation Check 15
MAINTENANCE. 15
INDOOR UNIT ADDRESSING. 15-17
Wireless Remote Controller (40VM900001) 15
Non-Programmable Controller (40VM900002) . . . 16
Programmable Controller (40VM900003). 16
TROUBLESHOOTING 17-19
Replacement Parts 19
APPENDIX A — DIP SWITCH SETTINGS 20

SAFETY CONSIDERATIONS

Improper installation, adjustment, alteration, service, maintenance, or use can cause explosion, fire, electrical shock, or other conditions which may cause death, personal injury or property damage. The qualified installer or agency must use factory-authorized kits or accessories when modifying this product.

Follow all safety codes. Wear safety glasses, protective clothing, and work gloves. Use quenching cloth for brazing operations. Have fire extinguisher available. Read these instructions thoroughly and follow all warnings or cautions included in literature and attached to the unit. Consult local building codes and the current editions of the National Electrical Code (NEC) ANSI/NFPA (American National Standards Institute/National Fire Protection Association) 70. In Canada, refer to the current editions of the Canadian Electrical Code CSA (Canadian Standards Association) C22.1.

Understand the signal words — DANGER, WARNING, and CAUTION. DANGER identifies the most serious hazards which will result in severe personal injury or death. WARNING signifies hazards that could result in personal injury or death. CAUTION is used to identify unsafe practices, which would result in minor personal injury or product and property damage.

Recognize safety information. This is the safety-alert symbol (⚠). When this symbol is displayed on the unit and in instructions or manuals, be alert to the potential for personal injury. Installing, starting up, and servicing equipment can be hazardous due to system pressure, electrical components, and equipment location.

⚠ WARNING

Electrical shock can cause personal injury and death. Shut off all power to this equipment during installation. There may be more than one disconnect switch. Tag all disconnect locations to alert others not to restore power until work is completed.

⚠ WARNING

When installing the equipment in a small space, provide adequate measures to avoid refrigerant concentration exceeding safety limits due to refrigerant leak. In case of refrigerant leak during installation, ventilate the space immediately. Failure to follow this procedure may lead to personal injury.

⚠ WARNING

DO NOT USE TORCH to remove any component. System contains oil and refrigerant under pressure.

To remove a component, wear protective gloves and goggles and proceed as follows:

a. Shut off electrical power to unit.
b. Recover refrigerant to relieve all pressure from system using both high-pressure and low pressure ports.
c. Traces of vapor should be displaced with nitrogen and the work area should be well ventilated. Refrigerant in contact with an open flame produces toxic gases.
d. Cut component connection tubing with tubing cutter and remove component from unit. Use a pan to catch any oil that may come out of the lines and as a gage for how much oil to add to the system.
e. Carefully unsweat remaining tubing stubs when necessary. Oil can ignite when exposed to torch flame.

Failure to follow these procedures may result in personal injury or death.

Manufacturer reserves the right to discontinue, or change at any time, specifications or designs without notice and without incurring obligations.

⚠ CAUTION

DO NOT re-use compressor oil or any oil that has been exposed to the atmosphere. Dispose of oil per local codes and regulations. DO NOT leave refrigerant system open to air any longer than the actual time required to service the equipment. Seal circuits being serviced and charge with dry nitrogen to prevent oil contamination when timely repairs cannot be completed. Failure to follow these procedures may result in damage to equipment. For information about replacement oil type and viscosity, see the Installation, Start-Up, and Service Instructions for the 38VMAH and 38VMAR outdoor units.

GENERAL

The 40VMF 4-way ceiling cassette effectively makes each area served an independently controlled temperature zone. Through thermostatic control of operations, conditions can be varied to suit diverse requirements and activities.

The equipment is initially protected under the manufacturer's standard warranty; however, the warranty is provided under the condition that the steps outlined in this manual for initial inspection, proper installation, regular periodic maintenance, and everyday operation of the unit be followed in detail. This manual should be fully reviewed in advance before initial installation, start-up and any maintenance. Contact your local sales representative or the factory with any questions BEFORE proceeding.

Table 1 lists physical data for each unit size. See Fig. 1 for model number nomenclature. Figure 1 shows unit dimensions. Table shows components that may or may not be used for a particular installation.

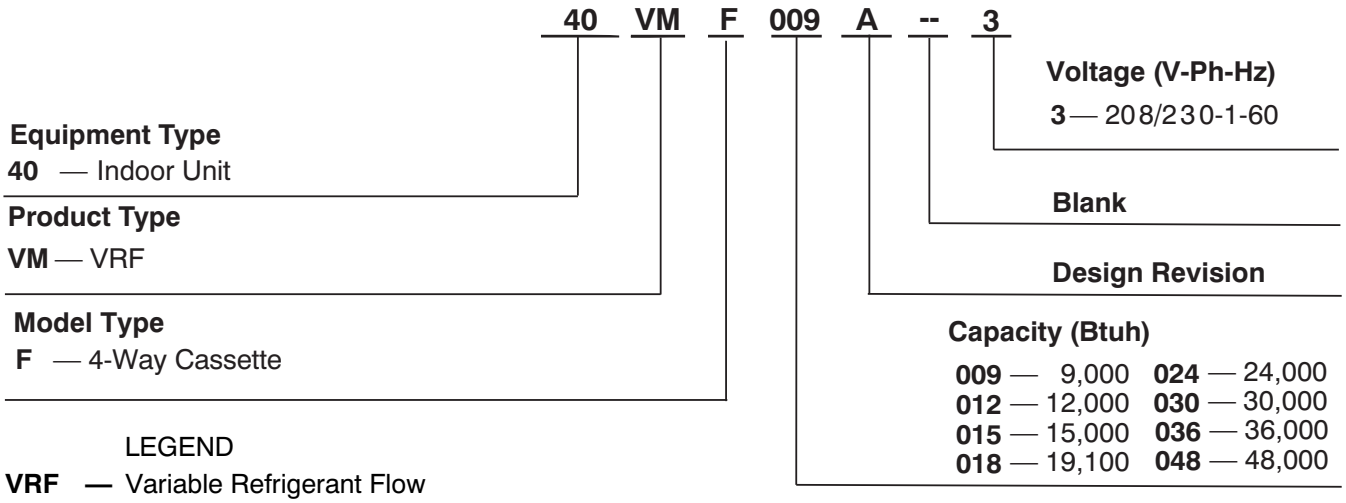

Fig. 1 — Model Number Nomenclature

Table 1 — 40VMF Physical Data

UNIT 40VMF	009	012	015	018	024	030	036	048
POWER SUPPLY (V-Ph-Hz)	208/230-1-60							
COOLING CAPACITY (Btuh)	9,000	12,000	15,000	19,100	24,000	30,000	36,000	48,000
HEATING CAPACITY (Btuh)	10,900	13,600	17,000	21,500	27,000	34,000	42,000	54,000
ELECTRICAL CHARACHTERISTICS								
Type	DC							
Input (W)	40	54	67	153.5	85.4	131.7	182.7	202.3
INDOOR COIL								
Number of Rows	2			3				
Fin Spacing (fins/in.)	17							
Fin Type	Hydrophilic Aluminum							
Tube Diameter, OD (in.)	0.276							
Tube Type	Inner Groove							
Number of Circuits	4			12				
INDOOR AIRFLOW (cfm)								
Low	330	390	460	610	610	680	800	950
Medium	390	460	560	700	700	800	950	1100
High	460	560	680	1000	800	950	1100	1200
INDOOR NOISE LEVEL (dBA)								
Low	32.1	33.0	37.0	40.2	40.2	42.1	47.3	50.5
Medium	34.0	37.3	41.5	43.1	42.5	45.1	50.4	54.0
High	36.7	41.4	45.6	52.5	44.7	49.5	53.9	55.4
UNIT								
Unit Dimensions, W x H x D (in.)	33 1/8 x 9 x 33 1/8			33 1/8 x 11 3/4 x 33 1/8				
Packing Dimensions, W x H x D (in.)	37 5/8 x 10 5/8 x 37 5/8			37 5/8 x 13 x 37 5/8				
Panel / Grille Dimensions, W x H x D (in.)	37 3/8 x 1 3/4 x 37 3/8							
Panel / Grille Dimensions (in.)	40 7/8 x 3 5/8 x 40 7/8							
Unit Net/Gross Weight (lb)	54/71			69/86				
Panel/Grille Net/Gross Weight (lb)	13.2/20							
REFRIGERATION TYPE	R-410A							
EXPANSION DEVICE	EEV							
DESIGN PRESSURE, High/Low (psig)	580/320							
AIR FILTER	—							
REFRIGERANT PIPING (in.)								
Liquid Side, OD (Flare)	1/4			3/8				
Suction Side, OD (Flare)	1/2			5/8				
CONNECTING WIRING								
Power Wiring	Sized per NEC and local codes based on nameplate electrical data							
Signal Wiring	2-core shielded twisted pair cable 20 AWG-16 AWG							
CONDENSATE DRAIN PIPE DIAMETER, OD (in.)	1 1/4							

LEGEND

AWG — American Wire Gage
EEV — Electronic Expansion Valve

Table 2 — Components Shipped With Unit

NAME	SHAPE	QUANTITY	FUNCTION
Nut		**8**	To connect the construction cover board to the fan motor
Washer		**8**	To connect the construction cover board to the fan motor
Construction cover board		**1**	Used to cover the fan motor
Bolt		**4**	To connect the construction cover board to the fan motor
Insulation		**2**	For covering the coil stub outs
Insulation		**1**	For covering the condensate drain
Clamp		**1**	For connecting the drain
Tie rope		**5**	For insulation
Condensate connection		**1**	For connecting drain
PQE connection wire		**2**	To connect outdoor unit, indoor unit, and sub MDC
Copper nut		**1**	Connect piping
Flexible conduit and connectors		**1**	Routing power lines
Connecting wire		**1**	For connecting occupancy sensor
Copper pipe for gas side		**1**	For connecting the refrigerant pipe
Copper pipe for liquid side		**1**	For connecting the refrigerant pipe

LEGEND
MDC — Multiport Distribution Controller

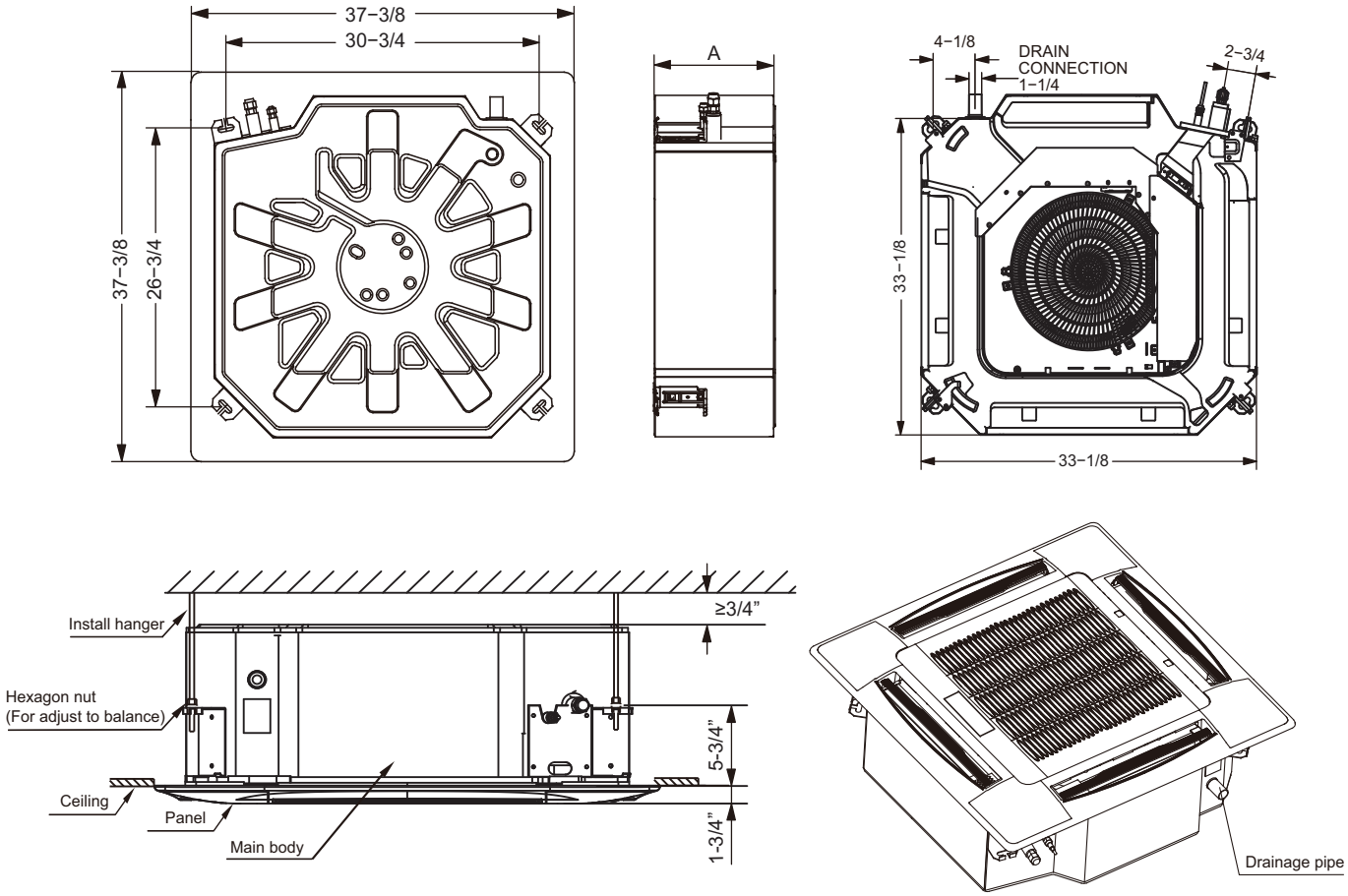

40VMF UNIT SIZE	DIMENSION A
009	9
012	
015	
018	11 3/4
024	
030	
036	
048	

NOTE: All dimensions shown in inches.

Fig. 1 — 40VMF009-048 Dimensions

INSTALLATION

Step 1 — Unpack and Inspect Units — Units are packaged for shipment to avoid damage during normal transit and handling. It is the receiving party's responsibility to inspect the equipment upon arrival. Any obvious damage to the carton and/or its contents should be reported on the bill of lading and a claim should be filed with the transportation company and the factory. Unit should always be stored in a dry place, and in the proper orientation as marked on the carton.

⚠ CAUTION

To avoid equipment damage, do not lift unit by the drain pipe or refrigerant piping. Unit should be lifted using the mounting brackets.

After determining the condition of the carton exterior, carefully remove each unit from the carton and inspect for hidden damage. Check to make sure that items such as thermostats, controller etc. are accounted for whether packaged separately or shipped at a later date. Any hidden damage should be recorded, a claim should be filed with the transportation company, and the factory should be notified. In the event a claim for shipping damage is filed, the unit, shipping carton, and all packing must be retained for physical inspection by the transportation company. All units should be stored in the factory shipping carton with internal packaging in place until installation.

PROTECTING UNITS FROM DAMAGE — Do not apply force or pressure to the coil, piping, or drain stub-outs during handling. All units should be handled by the chassis or as close as possible to the unit mounting point locations.

The unit must always be properly supported. Temporary supports used during installation or service must be adequate to hold the unit securely. To maintain warranty, protect units against hostile environments (such as rain, snow or extreme temperature), theft, vandalism, and debris on jobsite. Equipment covered in this manual is not suitable for outdoor installations. Do not allow foreign material to fall into drain pan. Prevent dust and debris from being deposited on motor, fan wheels and coils. Failure to do so may have serious adverse effects on unit operation and in the case of motor and blower assembly, may result in immediate or premature failure. Failure of any unit caused by deposits of foreign material on the motor or blower wheels will not be covered by the manufacturer's warranty. Some units and/or job conditions may require some form of temporary covering during construction.

PREPARING JOBSITE FOR UNIT INSTALLATION — To save time and to reduce the possibility of costly errors, set up a complete sample installation in a typical room at jobsite. Check all critical dimensions such as pipe, wire, and duct connections requirements. Refer to job drawings and product dimension drawings as required. Instruct all trades in their parts of the installation. Units must be installed in compliance with all applicable local code requirements.

IDENTIFYING AND PREPARING UNITS — Be sure power requirements match available power source. Refer to unit nameplate and wiring diagram. In addition:

- Check all tags on unit to determine if shipping screws are to be removed. Remove screws as directed.
- Rotate the fan wheel by hand to ensure that the fan is unrestricted and can rotate freely. Check for shipping damage and fan obstructions. Adjust blower motor as required.

Step 2 — Position the Unit

⚠ DANGER

Units must not be installed where they may be exposed to potentially explosive or flammable atmosphere. If this instruction is not followed exactly, a fire or explosion may result, causing property damage, injury, or loss of life.

Install the unit in a location that meets the following requirements:

- Allow adequate space for installation, service clearance, piping and electrical connections, and necessary ductwork. For specific unit dimensions, refer to Table 1 and Fig. 1. Allow clearance according to local and national codes.
- Confirm that the ceiling is able to support the weight of the unit. See Table 1 for nominal weight.
- There should be enough room within the false ceiling for installation and maintenance. See Fig. 2 below.
- The false ceiling should be horizontal and leveled.
- Install the unit in a location within the room that allows uniform air flow in all directions.

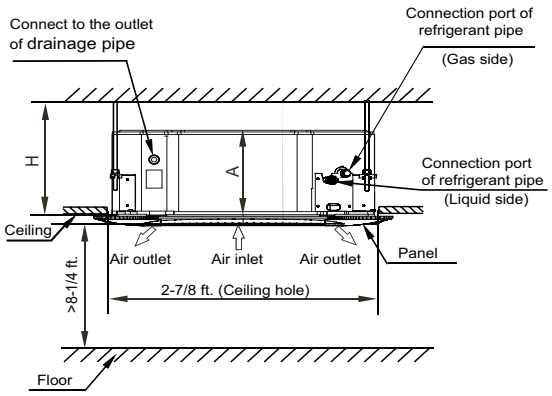

40VMF UNIT SIZE	DIMENSION (in.)	
	A	H
009-015	9	³ 10 1/4
018-048	11 3/4	³ 13

Fig. 2 — False Ceiling Installation

Select the unit position with the following points in mind:

- The unit should be installed in a position that is suitable to support the total weight of the unit, refrigerant piping and condensate.
- Proper access should be provided for maintenance for refrigerant piping, EEV (electronic expansion valve), electrical box, and condensate pump. A 2-ft clearance is recommended all around the unit.
- The unit should be at least 3 1/4 ft from a wall or similar obstruction. See Fig. 3 below.

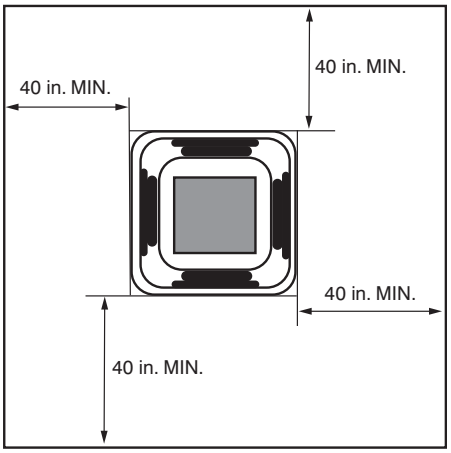

Fig. 3 — Distance from Wall or Obstruction

- Do not position where the discharge air could blow directly on the thermostat.
- Recommended distance between 2 units is 10 ft to avoid conflicting airflow and recirculation.
- The unit should not be positioned directly above any obstruction.
- The unit must be installed square and level.
- The condensate drain should have sufficient downward slope (1 in. per 100 in.) in any horizontal run between unit and drain. Maximum condensate lift is 29 $^1/_2$ inches.

IMPORTANT: Be sure that the ceiling grid is supported separately from the unit. The ceiling grid must not be supported by an part of the unit or any associated wiring or piping work.

In case of new construction, once the unit is installed, please cover the fan motor opening using the construction cover board to avoid any dust and debris from settling inside the unit. Use the M6 bolt, washer and nut as shown in Fig. 4 below.

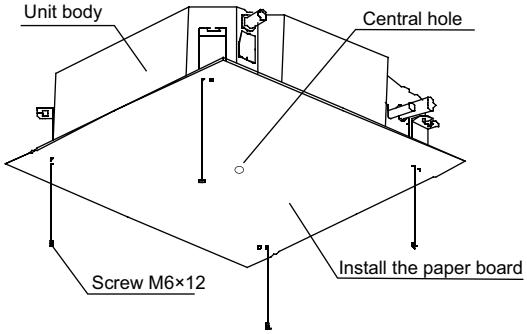

Fig. 4 — Paper Board Mounting Hole Locations

⚠ CAUTION

Remove all buffers between the fan and the flared mouth before installing the indoor unit. Failure to do so will cause damage to the fan motor.

⚠ CAUTION

To avoid equipment damage ensure the unit is placed horizontally.

See Fig. 5 for an example of some buffer locations.

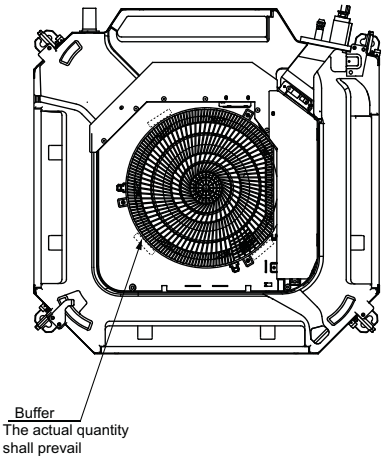

Fig. 5 — Example of Buffer Locations

Step 3 — Mount the Unit

INSTALLING HANGER BOLTS — Install the hanger bolts at the locations shown in Fig. 6. Use $^3/_8$-in. all-threaded rod. For unit weight, see Table 3.

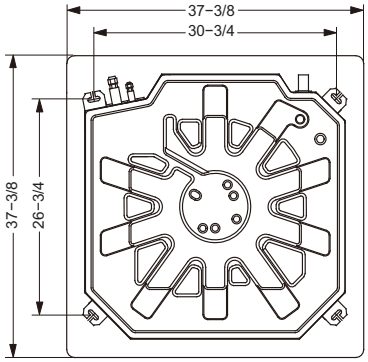

Fig. 6 — Mounting Hole Locations

Table 3 — Unit Weight

40VMF UNIT	WEIGHT (lb)*
009	71.0
012	71.0
015	71.0
018	86.0
024	86.0
030	86.0
036	86.0
048	86.0

*Includes grille weight.

MOUNTING UNIT — The unit can now be lifted on to the hanging rods for mounting.

1. Use rods and fasteners to suspend the unit at the factory-provided mounting holes.
2. Adjust the height of the unit until the bottom (without grille) is level with the false ceiling.
3. Secure the unit in position with locknuts and washers on both sides of the unit bracket. Ensure that the threaded rod does not protrude more than 2 in. below the mounting brackets as shown in Fig. 7.

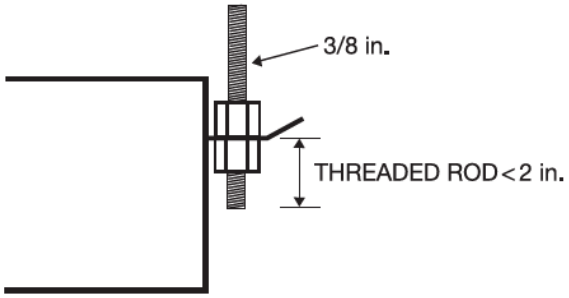

Fig. 7 — Threaded Rod

INSTALLING PANEL

NOTE: Panel is ordered separately.

1. Remove the grille from the panel by sliding the grille latches toward the center of the panel.
2. Lift the grille up at a 45-degree angle and pull to detach it from the panel.
3. Unscrew the bolts on the 4 corners of the cover panel. Remove the cover by loosening the cord. See Fig. 8.

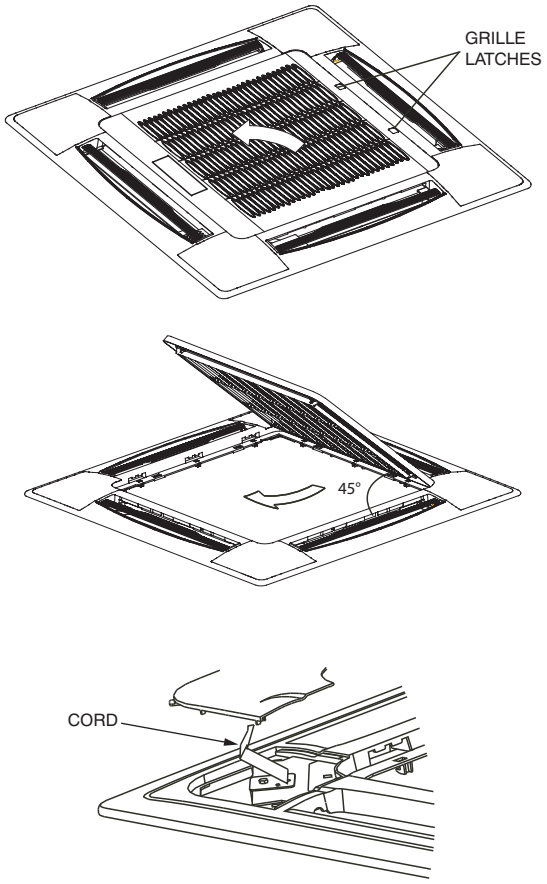

Fig. 8 — Removing Grille from Panel

4. Secure the panel (without the grille) onto the unit, using M5 x 16 screws and washers. Before tightening the screws, be sure the panel is flush with the false ceiling. See Fig. 9.

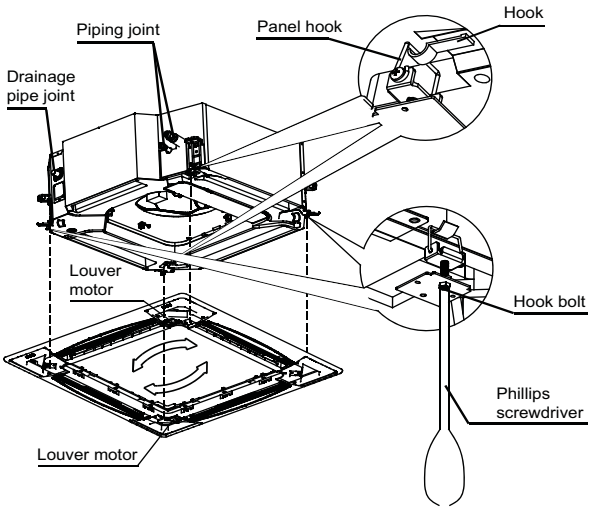

Fig. 9 — Mounting Panel

5. When the panel is secure, insert the grille at a 45-degree angle and latch it in place.

Step 4 — Connect Piping

CONDENSATE PIPING — The unit is supplied with a 1 1/4-inch OD drain connection to connect copper or plastic drain piping. When installing condensate piping, follow these recommendations:

- Maximum pump lift is 29 1/2 inches.
- The highest point in the condensate piping should be as close to the unit as possible. See Fig. 10-12 below.

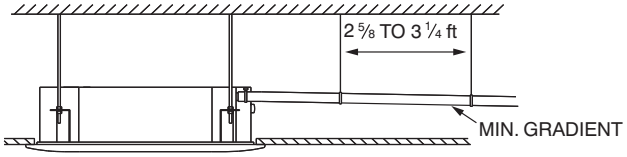

Fig. 10 — Condensate Piping

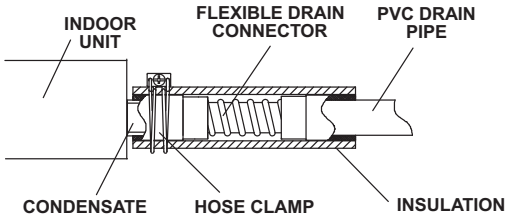

Fig. 11 — Condensate Drain Connection

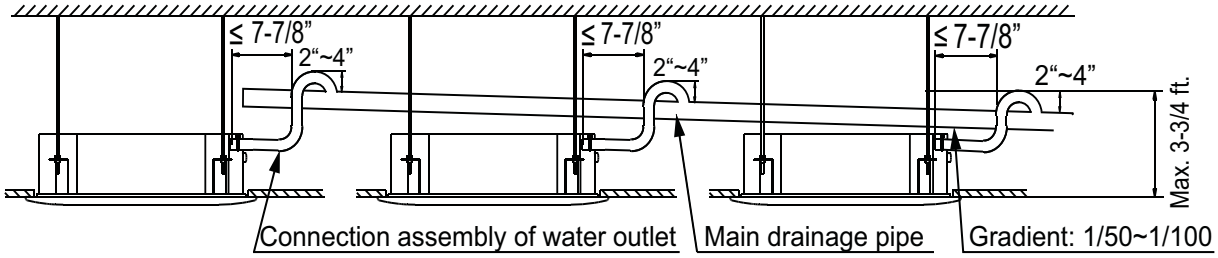

Fig. 12 — Using a Main Drain to Serve Multiple Indoor Units with Internal Condensate Pumps

- Condensate piping should slope downward in the direction of condensate flow, with a minimum gradient of 1 in. per 100 inches.
- When multiple units are connected to a common condensate drain, ensure that the drain is large enough to accommodate the volume of condensate from all units. It is also recommended to have an air vent in the condensate piping to prevent air lock.
- Condensate piping must not be installed where it may be exposed to freezing temperatures.

REFRIGERANT PIPING

⚠ CAUTION

When connecting from an indoor unit to an outdoor unit, the isolation valve at the outdoor unit should be in the closed position throughout the refrigerant piping process. Failure to follow this procedure may result in equipment damage.

When connecting from an indoor unit to an outdoor unit, follow these procedures:

- Check maximum height drop and length of refrigerant piping between the indoor and outdoor units. To ensure the drop and length are acceptable, refer to the refrigerant piping allowable limits in the outdoor unit installation manual.
- The number of bends in the refrigeration piping must be fewer than 15.
- Refrigerant piping connection between indoor and outdoor units should be performed once the units are secured at their respective installation locations.
- The refrigeration piping starts at the indoor unit and ends at the outdoor unit or Multiport Distribution Controller (Heat Recovery systems).
- The refrigerant piping should be dry and free of dust and other impurities.
- The bending angle of the refrigerant pipe should not exceed 90 degrees and the bending radius should be as large as possible to prevent any breakage in piping.
- Use proper cutting and flaring tools to avoid leakage.
- Use a torque wrench for flare nuts. Refer to Table 4 for flare nut torque recommendations.

Table 4 — Flare Nut Torque Recommendations

OUTSIDE DIAMETER (in.)	RECOMMENDED TORQUE (ft-lb)
1/4	15
3/8	26
1/2	41
5/8	48

- Before insulating the suction and liquid refrigeration pipes, perform pressure and leak tests. For details, see the outdoor unit installation manual. Insulating both suction and liquid refrigerant pipes is mandatory.
- Vacuuming and charging of the system should be carried out as described in the outdoor unit installation manual.

Step 5 — Complete Electrical Connections — Installation of wiring must conform with local building codes, or in the absence of local codes, with the National Electric Code ANSI/NFPA (American National Standards Institute/ National Fire Protection Association) 70, current editions. Units must be electrically grounded in conformance with the code. In Canada, wiring must comply with CSA (Canadian Standards Association) C22.1, Electrical Code.

⚠ WARNING

Electrical shock can cause personal injury and death. Disconnect power supply before making wiring connections. There may be more than one disconnect switch. Tag all disconnect locations to alert others not to restore power until work is completed.

⚠ WARNING

All units must be wired strictly in accordance with the wiring diagram furnished with the unit. Any wiring different from the wiring diagram could result in personal injury and property damage.

⚠ CAUTION

Any original factory wiring that requires replacement must be replaced with wiring material having a temperature rating of at least 221 F.

Ensure supply voltage to the unit, as indicated on the serial plate, is not more than 10% over the rated voltage or 10% under the rated voltage.

Failure to follow these recommendations may result in equipment damage.

This equipment in its standard form is designed for an electrical supply of 208/230-1-60. Any damage to or failure of units caused by incorrect wiring or voltage is not covered by warranty.

Electric wiring must be sized to carry the full load amp draw of the motor, starter, and any other controls that are used with the unit. See Table 5 for electrical data.

After the pipe work is complete, the electrical supply can be connected by routing the cable through the appropriate casing holes or knockouts and connecting the supply and ground cables to the unit's power terminal.

Be sure the power wiring and control wiring do not cross, as this might cause disturbance on the controls side. See Fig. 13 for wiring diagram.

NOTE: The indoor unit requires its own power supply. Indoor units are not powered through outdoor units.

Table 5 — 40VMF Electrical Data

40VMF UNIT SIZE	POWER SUPPLY	
	MCA	MOPD
009	0.73	15
012	0.91	15
015	1.10	15
018	2.00	15
024	1.30	15
030	1.70	15
036	2.30	15
048	2.40	15

LEGEND

MCA — Minimum Circuit Amps
MOPD — Maximum Overcurrent Protective Device

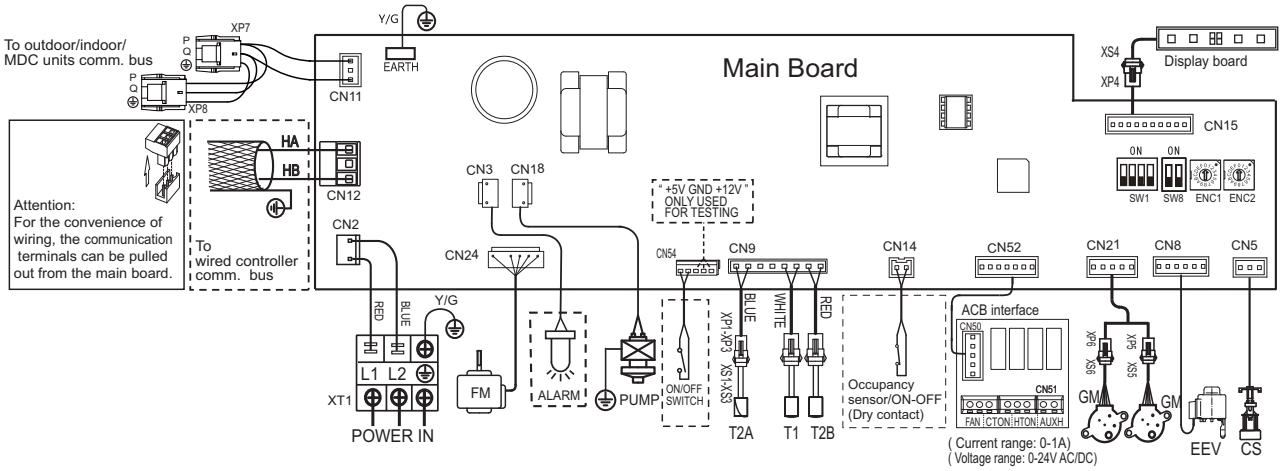

LEGEND

ACB — Auxiliary Control Board
AUXH — Output For Auxiliary Heat
CS — Condensate Switch
CTON — Output for Cooling Operation
EEV — Electronic Expansion Valve
FAN — Output for Fan Operation
FM — Indoor Fan Motor
GM — Louver Motor
HTON — Output For Heating Operation
MDC — Multiport Distribution Controller
PUMP — Pump Motor
T1 — Indoor Temperature Sensor
T2A — Evaporator Temperature Sensor
T2B — Evaporator Outlet Temperature Sensor
XP1-9 — Plug
XS1-9 — Jack
XT1-2 — Terminal Block
---------- Optional Component or Field Wiring

NOTE: Field wiring must use copper conductors only.

Fig. 13 — 40VMF009-048 Typical Wiring Diagram

Step 6 — Position and Connect Controller —

Wired controllers should be installed in a position that maintains good temperature control:

- Position the thermostat approximately 48 in. above floor level.
- Do not position thermostat where it can be directly affected by the unit's discharge airstream.
- Avoid external walls and drafts from windows and doors.
- Avoid positioning near shelves and curtains as these restrict air movement.
- Avoid heat sources such as direct sunlight, heaters, dimmer switches, and other electrical devices
- See Fig. 14 for an example of communication wire connection.

CONTROL WIRING

1. Use copper core PVC insulated sheathed shielded twisted cord.
2. For IDU (indoor unit) and ODU (outdoor unit) communication, use 'P, Q" terminals. Shielded core should be used for ground.
3. Wiring should be done according to wiring diagram.
4. Communication wire must not form a closed loop.

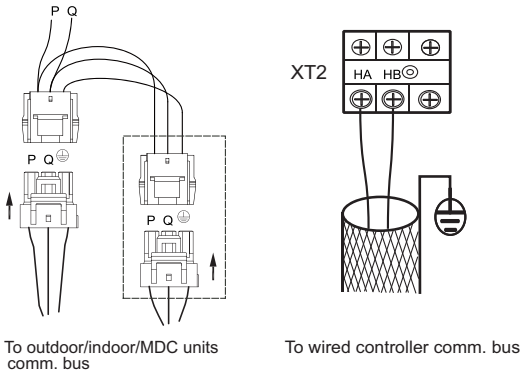

Fig. 14 — Communication Wire Connection

OPTION/EXTENSIONS OF COMMUNICATION WIRING — To extend control wiring or make terminal connections, use the PQE connection wire supplied in the accessory kit and follow the steps below.

1. Cut the connector on the outdoor unit side as shown in Fig. 15 below.

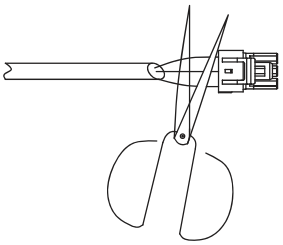

Fig. 15 — Shearing Outdoor Connector

2. Strip a suitable length of the insulation layer as shown in Fig. 16 below.

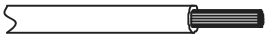

Fig. 16 — Stripping the Wire

3. Use a suitable screwdriver to fix the communication wire on the outdoor unit communication terminal as shown in Fig. 17 below.

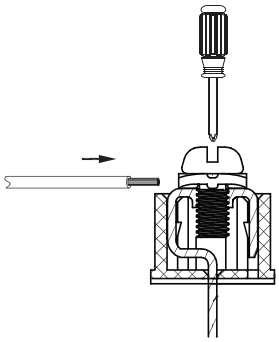

Fig. 17 — Connecting Communication Wire to Outdoor Unit Communication Terminal

If communication wires are use to connect indoor units, then find the corresponding port and plug it directly as shown in Fig. 18.

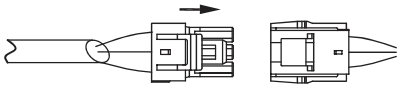

Fig. 18 — Connecting the Communication Wires

If for any reason it is not possible to buy communication wires from Carrier, connect the indoor unit side of the communication wires using the connector provided with the accessories as shown in Fig. 19. See Fig. 20 and 20 for typical communication wiring of the heat pump and heat recovery systems.

⚠ CAUTION

Failure to follow these procedures may result in personal injury or damage to equipment.

NEVER CONNECT the main power source to the control or communication terminal block.

USE AN APPROPRIATE SCREWDRIVER for tightening the terminal screws. Do not over tighten the terminal screws.

IMPORTANT: Communication wiring shall be 2 in. or more apart from power source wiring to avoid electric noise. (Do not insert control/communication and power source wire in the same conduit.)

Pay attention to the polarity of the communication wire.

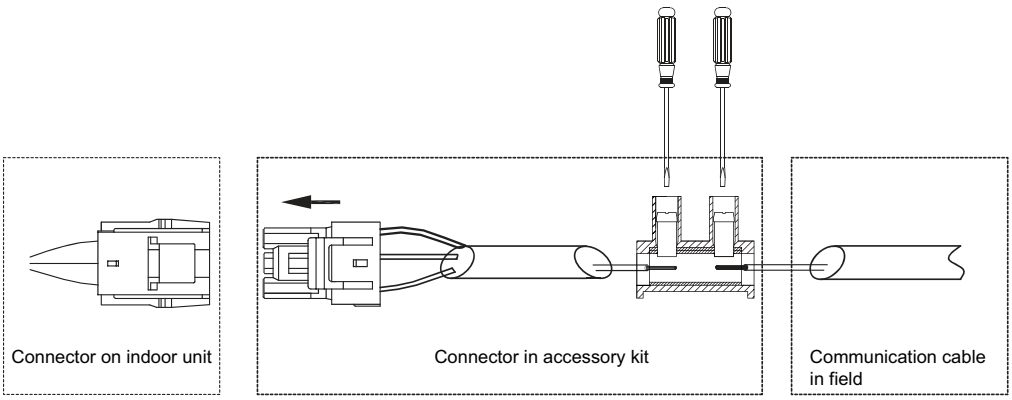

Fig. 19 — Connecting the Communication Cable to Indoor Unit to Outdoor Unit Using the Supplied Connector

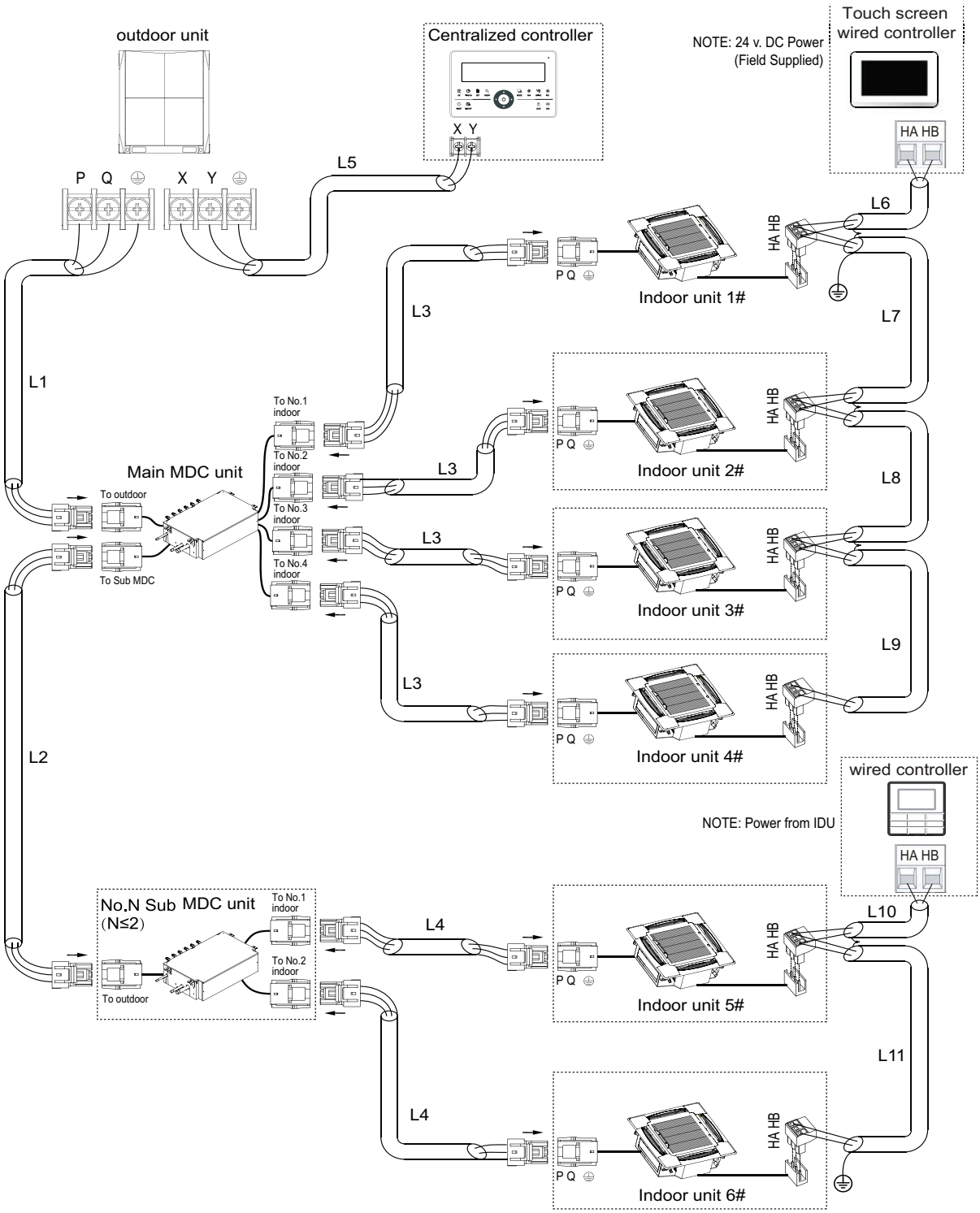

Maximum wiring length:
L1+L2 </= 3937 ft 18 AWG, 2-Core Stranded Shield
L3 </= 3937 ft 18 AWG, 2-Core Stranded Shield
L4 </= 3937 ft 18 AWG, 2-Core Stranded Shield
L5 </= 3937 ft 18 AWG, 2-Core Stranded Shield
L6+L7+L8+L9 </= 820 ft 18 AWG, 2-Core Stranded Shield
L10+L11 </= 820 ft 18 AWG, 2-Core Stranded Shield

LEGEND
MDC __ Multiport Distribution Controller
IDU __ Indoor Unit

Fig. 20 — Typical Heat Recovery Communication Wiring Diagram

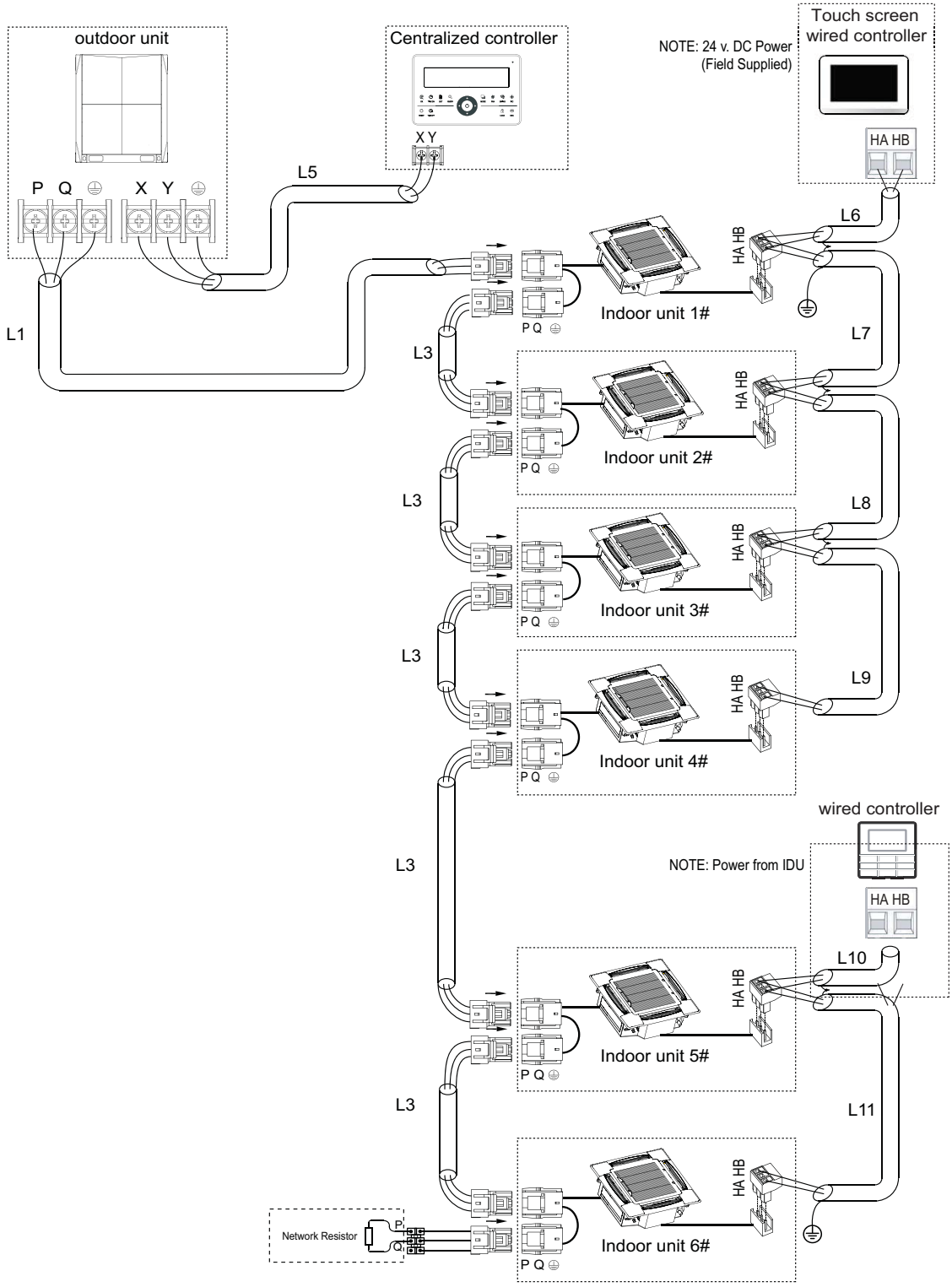

Maximum wiring length
L1+L3 </= 3937 ft 18 AWG, 2-Core Stranded Shield
L5 </= 3937 ft 18 AWG, 2-Core Stranded Shield
L6+L7+L8+L9 </= 820 ft 18 AWG, 2-Core Stranded Shield
L10+L11 </= 820 ft 18 AWG, 2-Core Stranded Shield

LEGEND
IDU __ Indoor Unit

NOTE: Network resistor is shipped with the outdoor unit for field installation on heat pump systems.

Fig. 20 — Typical Heat Pump Communication Wiring Diagram

ACB Interface — The ACB interface is a dry contact board, it can output up to four signals controlling devices. Please refer to Fig. 21 for connecting devices to the ACB interface board.

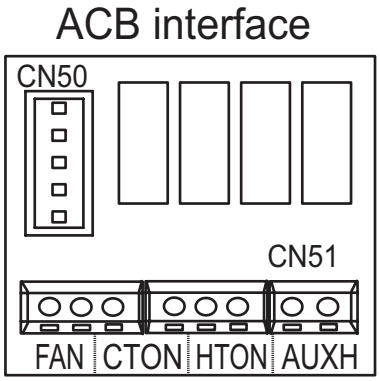

MAX AMPS	1A
MAX VOLTAGE	24V

LEGEND

ACB — Auxiliary Control Board
AUXH — Output For Auxiliary Heat
CTON — Output For Cooling Operation
FAN — Output For Fan Operation
HTON — Output For Heating Operation

Fig. 21 — ACB Interface

START-UP

Pre-Start Check — Once installation is complete, make the following pre-start checks:

1. All indoor and outdoor units are properly installed.
2. All piping and insulation is complete.
3. All electrical connections (both power and control) are properly terminated.
4. All condensate drains are installed correctly.
5. The power supply is of the right voltage and frequency.
6. The units are properly grounded in accordance with current electrical codes.
7. Suction and liquid line isolation valves are in open position.

System Operation Check — Once the installation and pre-start checks are completed, follow these steps:

1. Using remote controller, select cooling or heating mode to check the operation of the system.
2. While the system is in operation, check the following on indoor unit:
   a. Switches or buttons on the remote controller are easy to push.
   b. Indicator light is showing normal operation and no error is indicated.
   c. Swing mode of air louvers is working (if applicable to unit).
   d. Drain pump operation is normal (if applicable).
   e. No abnormal vibration or noise is noticed.
3. While the system is in operation, check the following on outdoor unit:
   a. No abnormal vibration or noise is noticed.
   b. Condenser fan is in operation.
   c. Indicator light is showing normal operation and no error is indicated.

NOTE: If the unit is turned off or restarted, there is a time delay of 3 minutes for the compressor to start from the time the power is restored.

MAINTENANCE

⚠ CAUTION

When servicing or repairing this unit, use only factory-approved service replacement parts. Refer to the rating plate on the unit for complete unit model number, serial number and company address. Any substitution of parts or controls not approved by the factory will be at the owner's risk and may result in equipment damage.

⚠ CAUTION

To avoid equipment damage, do not attempt to reuse any mechanical or electrical controllers that have been wet. Replace defective controller.

EVERY 3 MONTHS:

- Check the air filter condition. Clean or replace if necessary.

EVERY 6 MONTHS — Follow 3-month maintenance schedule. In addition:

- Clean condensate tray with suitable cleaning agent.
- Clean the grille and panel.

EVERY 12 MONTHS — Follow 6-month maintenance schedule. In addition:

- Be sure all electrical connections are secure.
- Check condensate pump operation.
- Check the heating and cooling action to confirm proper operation.

INDOOR UNIT ADDRESSING

For proper system operation each indoor unit must have a unique address set from 0 to 63. When setting an address by remote controller the outdoor units, indoor units, and MDC must be powered on. If "FE" is displayed on the LED screen or display board this unit has no address. After setting all indoor units' addresses, turn off the power supply to all indoor units to clear errors.

Indoor units' addressing can be distributed automatically in the heat pump system. When dip switch "S6" on the outdoor units main PCB board is set to 00 (default set in factory) indoor unit's are set for auto-addressing. When powering on for the first time it takes 6 minutes or more to finish auto-addressing each indoor unit. The heat recovery system cannot accomplish this function at this time.

Wireless Remote Controller (40VM900001) —

Indoor unit addressing can be performed using the wireless remote controller. When using the wireless controller, the user must maintain a line of sight with the receiver on the indoor unit. See Fig. 22 for a description of the buttons on the wireless remote.

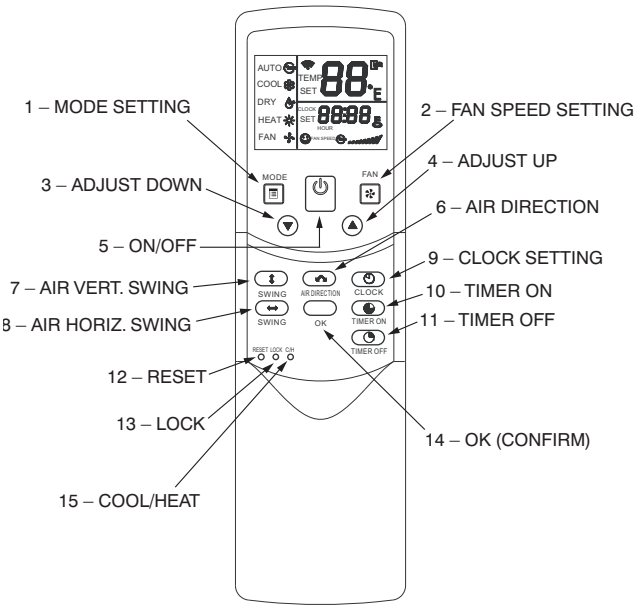

Fig. 22 — Wireless Remote Controller (40VM900001)

Use a tool to press and hold the LOCK button for at least 10 seconds, then press ⏻ to activate. Click ▲ or ▼ to select an address and press FAN to send the setting.

To display an indoor unit address, use a tool to press and hold the LOCK button for at least 10 seconds, and press MODE to query the addresses.

Non-Programmable Controller (40VM900002)

When setting an address, connect only one wired controller to an indoor unit.

Press **ROOM TEMP** and **SWING** simultaneously for 3 seconds. If there is no address for this indoor unit, the display shows **FE# 00** (see Fig. 23). Otherwise, the display shows the current address of the indoor unit.

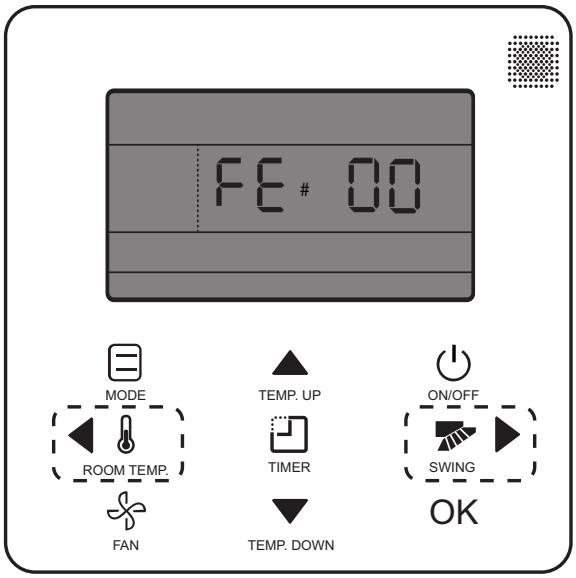

Fig. 23 — Non-Programmable Controller (40VM900002) IDU Addressing Menu

Click **TEMP. UP** or **TEMP. DOWN** to change 00 to the desired address as shown in Fig. 24. Then press **OK** to confirm and exit the setting interface.

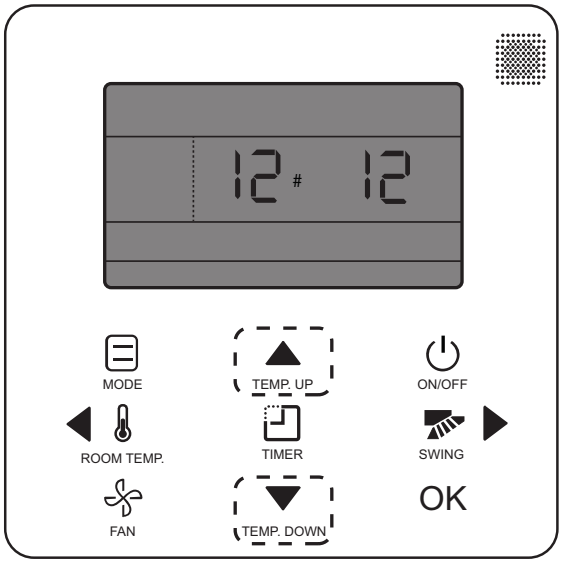

Fig. 24 — Non-Programmable Controller (40VM900002) Setting IDU Address

Programmable Controller (40VM900003) —

When setting an address, connect only one wired controller to an indoor unit.

1. Press **FAN** and **BACK** simultaneously for 5 seconds to access parameter settings as shown in Fig. 25.

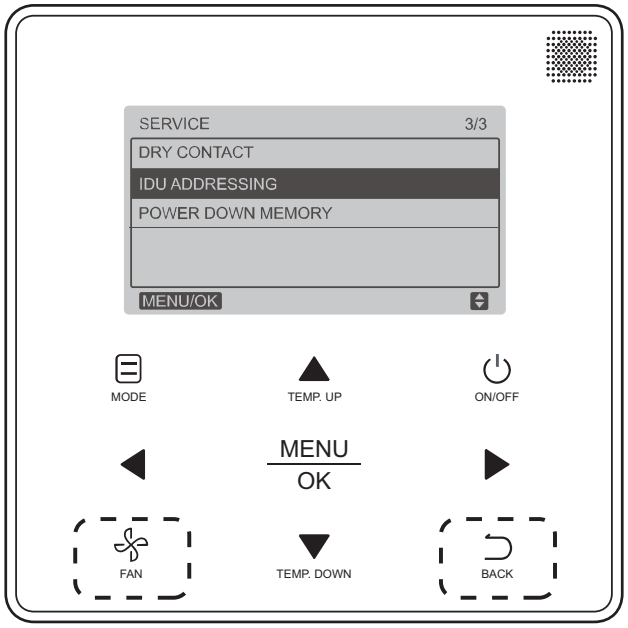

Fig. 25 — Programmable Controller (40VM900003) IDU Addressing Menu

2. Press **TEMP. UP** or **TEMP. DOWN** to move the cursor and choose IDU ADDRESSING, then **MENU/OK** to access this setting.

3. Press **TEMP. UP** or **TEMP. DOWN** to choose the address you want to set, see Fig. 26. Press **MENU/OK** to send this address to the IDU.

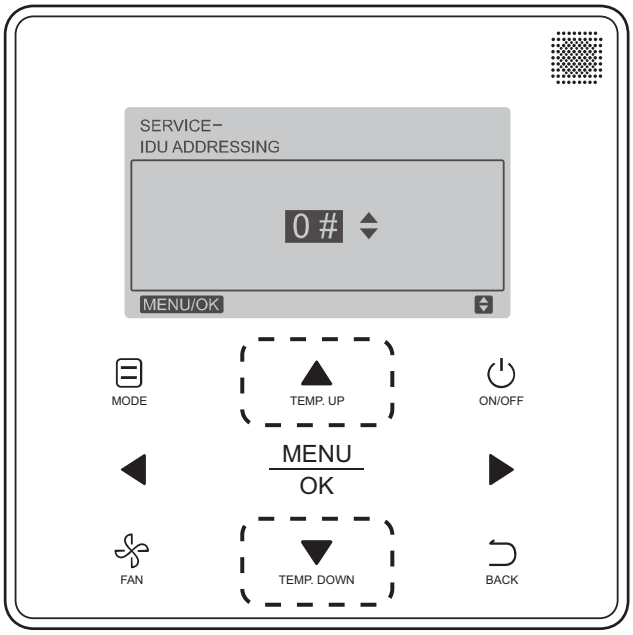

Fig. 26 — Programmable Controller (40VM900003) Setting IDU Address

4. Press BACK twice or wait 30 sec. to automatically exit the parameter settings menu.

TROUBLESHOOTING

Figure 27 shows the LED display panel on the indoor unit. See Table 6 for a summary of display indicators. Table 7 lists problems, possible causes, and possible solutions.

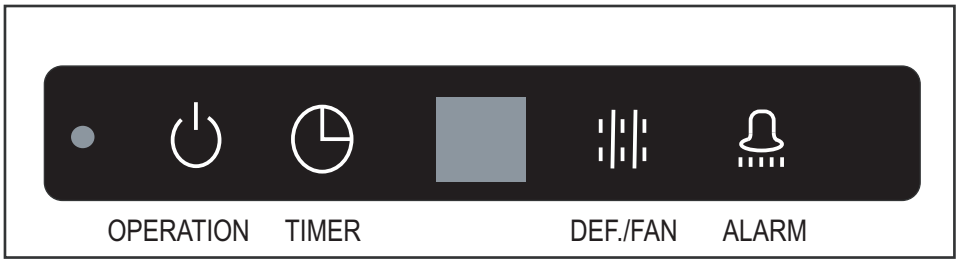

Fig. 27 — LED Display Panel

Table 6 — Display Indicators

TYPE	DIGITAL DISPLAY	MODE/STATUS
[NO ERROR]	Setting Temperature	Starting
	"--"	Shutdown
	"--"	Standby
	"--"	Timing ON
	"--"	Timing OFF
	Setting Temperature	System Defrost ON
	Setting Temperature	System Defrost OFF
	Room Temperature	Only Fan
ERROR	**dd**	Heating / Cooling Mode Conflict Error
	E1	Communication Error Between Indoor and Outdoor Unit
	E2	Check Indoor Temperature Sensor (T1)
	E4	Check Evaporator Outlet Temperature Sensor (T2B)
	E5	Check Evaporator Temperature Sensor (T2A)
	E6	Check DC Fan
	E7	EEPROM Error (Data Storage)
	E9	Communication Error Between Indoor Unit and Wired Controller.
	Eb	EEV Error
	Ed	Outdoor Unit Error
	EE	Condensate Overflow
	FE	No Address When Powered ON For First Time
	UU	MDC In Auto System-Check Mode.

LEGEND

ACB — Auxiliary Control Board
EEPROM — Electronically Erasable Programmable Read-only Memory
EEV — Electronic Expansion Valve
MDC — Multiport Distribution Controller

Table 7 — Troubleshooting

DIGITAL DISPLAY	DESCRIPTION	POSSIBLE CAUSES	POSSIBLE SOLUTIONS
dd	Heating/Cooling Mode Conflict	System is in cooling or fan mode only and heating signal is received from a unit in the system.	All units should be in cooling mode for system to stay in cooling mode.
		System is in heating mode and cooling signal is received from a unit in the system.	All units should be in heating mode.
E1	Communication Error Between Indoor and Outdoor Unit	Signal wires are short-circuited or disconnected.	Check or reconnect signal wire.
		Signal wires close to electromagnetic source.	Distance signal wires from electromagnetic source.
		PC board fault.	Replace PC board.
E2, E4, E5	Check Temperature Sensor	Loose connection at port on PC board.	Tighten the connection at port on PC board.
		Sensor is short-circuited.	Using multi-meter, measure resistance of the sensor. If the resistance is ≤ 100 ohms, change the sensor.
		PC board fault.	Replace PC board.
E6	Check DC Fan Motor	Operating beyond limits.	Check and correct external static pressure on the unit.
		DC motor fault.	Replace DC motor.
		PC board fault.	Replace PC board.
E7	EEPROM Error (Data Storage)	Chip or PC board fault.	Replace PC board.
E9	Communication Error Between Indoor Unit and Controller	Signal wires are short-circuited or disconnected.	Check or reconnect signal wires.
		Signal wires close to electromagnetic source.	Distance signal wires from electromagnetic source.
		PC board fault.	Replace PC board.
Eb	EEV Error	EEV wires are short-circuited or disconnected.	Check or reconnect signal wire.
		EEV stop.	Replace EEV.
		PC board fault.	Replace PC board.
Ed	Outdoor Unit Error	Outdoor unit fault.	Refer to outdoor unit troubleshooting guide.
EE	Condensate Overflow	Loose connection or disconnected at port on PC board.	Tighten the connection or reconnect at port on PC board.
		Condensate switch float is stuck.	Inspect the float.
		Trap slope is too steep.	Adjust the trap slope.
		Drain pipe is too long.	Adjust the length of the drain pipe.
		Drain pump faulty.	Replace the drain pump.
FE	No Address When Powered ON For First Time	Indoor unit without address.	Run automatic addressing option at the outdoor unit.
			Use remote wireless or wired controller to readdress the indoor unit.
UU	MDC In Auto System-Check Mode	MDC Fault.	Refer to MDC troubleshooting guide.

LEGEND

EEPROM — Electronically Erasable Programmable Read-only Memory
EEV — Electronic Expansion Valve
MDC — Multiport Distribution Controller
PC — Process Controller

Replacement Parts — Quote the unit type and unit serial number when ordering replacement parts or contacting the factory about the unit. This information can be found on the serial plate attached to the unit. See Fig. 28.

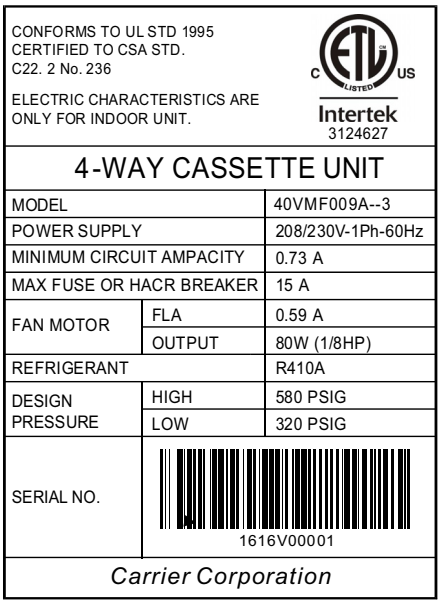

Fig. 28 — Unit Serial Plate (Example)

APPENDIX A — DIP SWITCH SETTINGS

There are 2 DIP switches on the main board. Figures A and B show the settings for each parameter controlled by a switch. Switches are shown in the default settings.

POSITION 1 — START-UP

OFF — Auto Addressing Mode (Default)
ON — Factory Test Mode

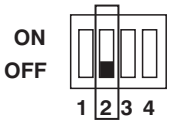

POSITION 2

OFF — Normal Mode (Default)
ON — Factory Self-Checking Mode

POSITION 3 — NOT USED

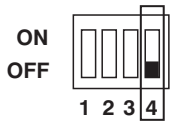

POSITION 4 — INDOOR UNIT IDENTIFICATION

OFF — Standard Indoor Unit (Default)
ON — Mode Priority Indoor Unit (HP Only) (IDU address must be 63)

Fig. A — SW1 SETTINGS

POSITION 1, 2 — NOT USED

Fig. B — SW8 SETTINGS

© Carrier Corporation 2018