VRF Indoor Unit
40VMA048---3—Outside Air Unit

bryant®
Heating & Cooling Systems

Submittal Data

Job Name _____ Location _____
Tag _____

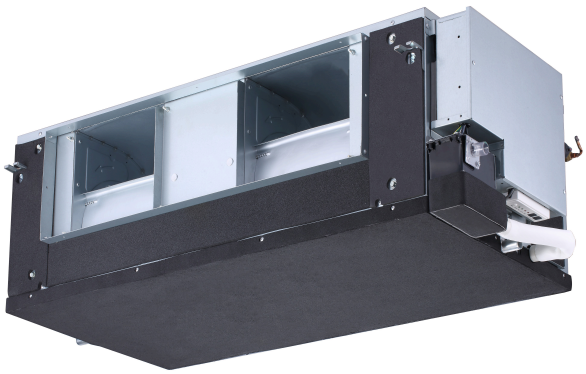

STANDARD FEATURES

- Ducted Supply and Return Opening
- Three Fan Speeds - High, Medium, and Low
- Built in Drain Pump from Factory (27-1/2 inch lift)
- Built in EXV (Electronic Expansion Valve) for Install Ease

INDOOR UNIT MODEL		40VMA048---3
PERFORMANCE		
Cooling Rated Capacity	Btu/h	48,670
Sensible Cooling Capacity	Btu/h	29,220
Heating Rated Capacity	Btu/h	30,000
Airflow (H / M / L)	CFM	647 / 559 / 471
Sound Pressure (H / M / L)	dBA	50.4 / 47.8 / 43.4
ELECTRICAL		
Power Supply	V/Ph/Hz	208-230/1/60
Indoor Fan Motor Power Consumption (Input)	W	71
Minimum Circuit Amps (MCA)	A	6.3
Maximum Overcurrent Protection	A	15.0
Motor Type		DC

PHYSICAL DATA		
Pipe Connection Size - Liquid	in.	3/8 (OD)
Pipe Connection Size - Discharge Gas	in.	5/8 (OD)
Pipe Connection Size - Drain	in.	1 (OD)
Minimum External Static Pressure (ESP) (Factory Default)	in. wg	0.2
Maximum External Static Pressure (ESP)	in. wg	0.8
Refrigerant		R-410A
Unit Width	in.	51-3/16
Unit Height	in.	16-1/2
Unit Depth	in.	27-3/16
Net Unit Weight	lb	161.4

ACCESSORIES

- ☐ Wireless Remote Controller 40VM900001
- ☐ Wired Remote Controller - Non-Prog. 40VM900012
- ☐ Wired Remote Controller - Prog. 40VM900013
- ☐ Touch Screen Wired Controller 40VM900005
- ☐ 24V Controller 40VM900008
- ☐ Button Sensor 40VM900009

© 2021 Bryant Heating & Cooling Systems. All rights reserved.
Edition Date: 03/21
Form No: 40VMA048-B-3SD
A Carrier Company
Printed in U.S.A.
Replaces: 40VMA048-B-2SD

Manufacturer reserves the right to discontinue, or change at any time, specifications or designs without notice and without incurring obligations.

DIMENSIONAL DRAWING
OUTSIDE AIR INDOOR UNIT 40VMA048---3

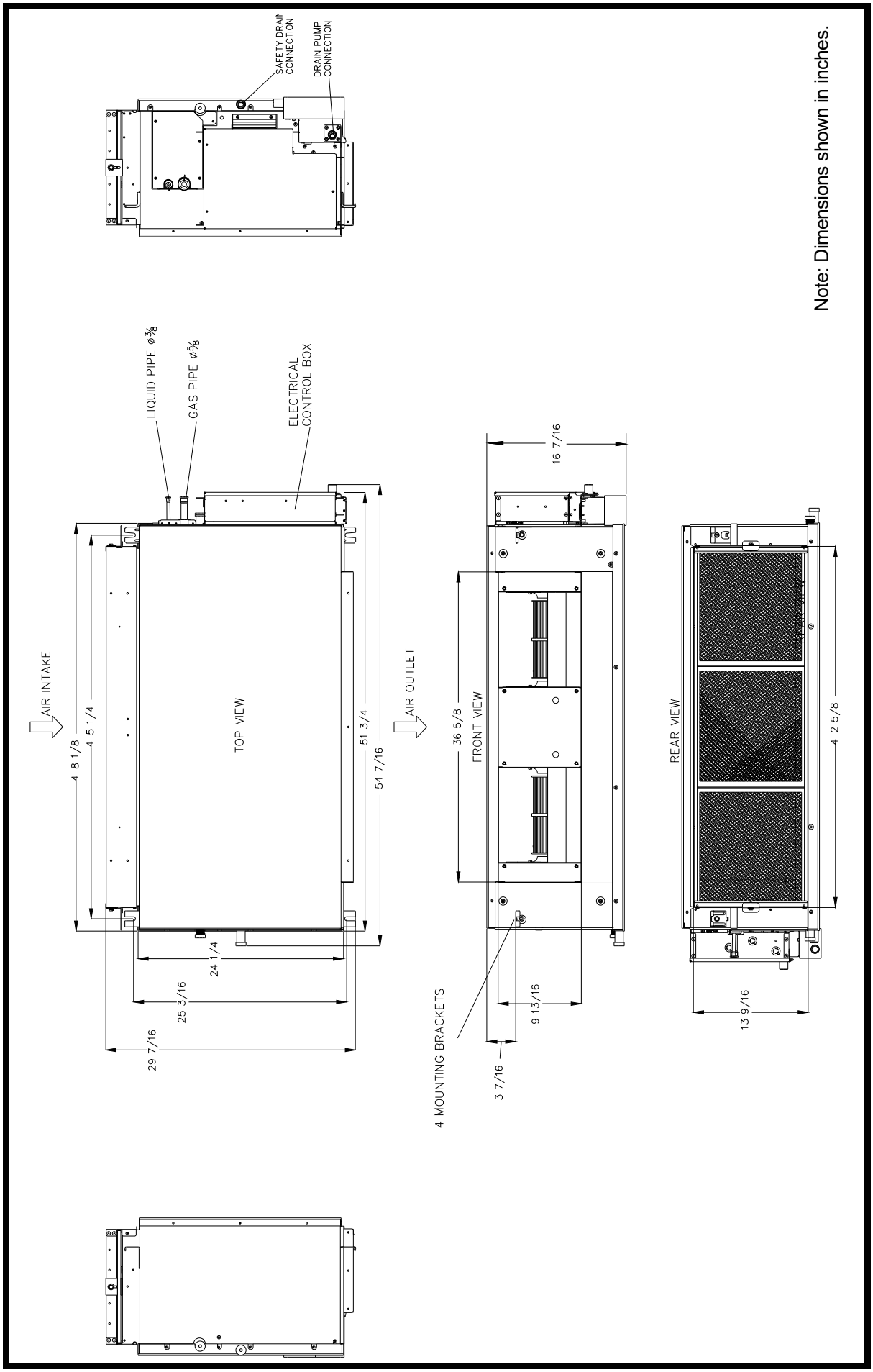

Recommended Service / Maintenance Clearances

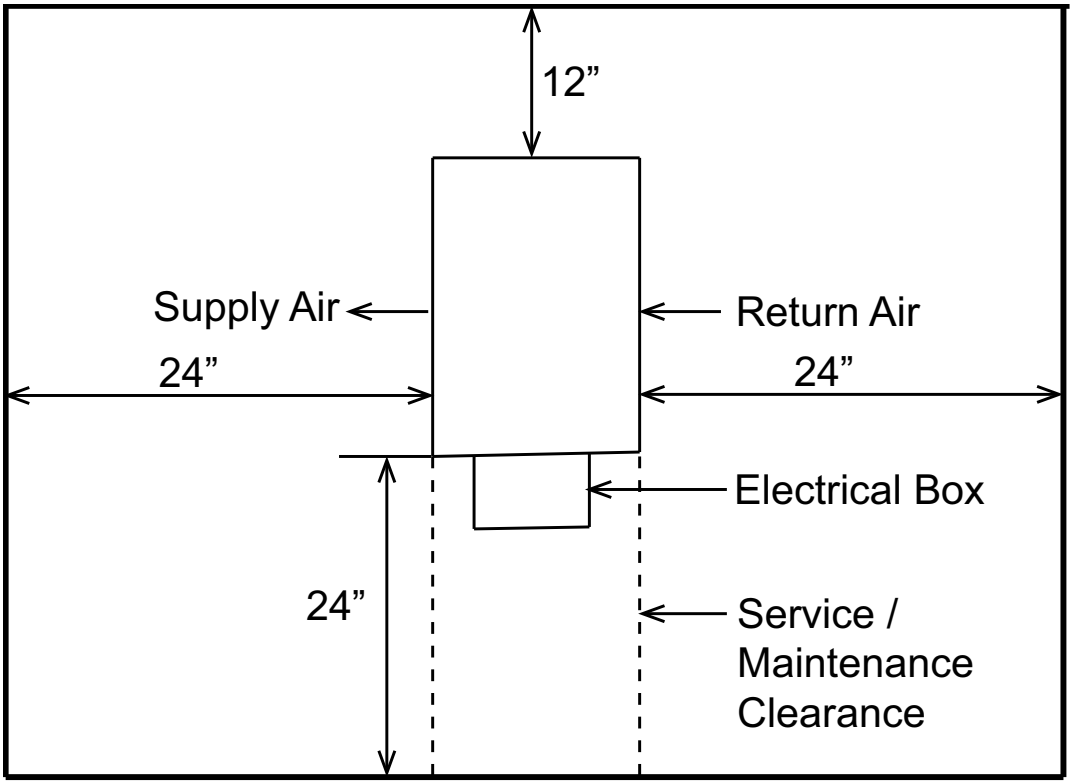

Recommended Mounting Instructions

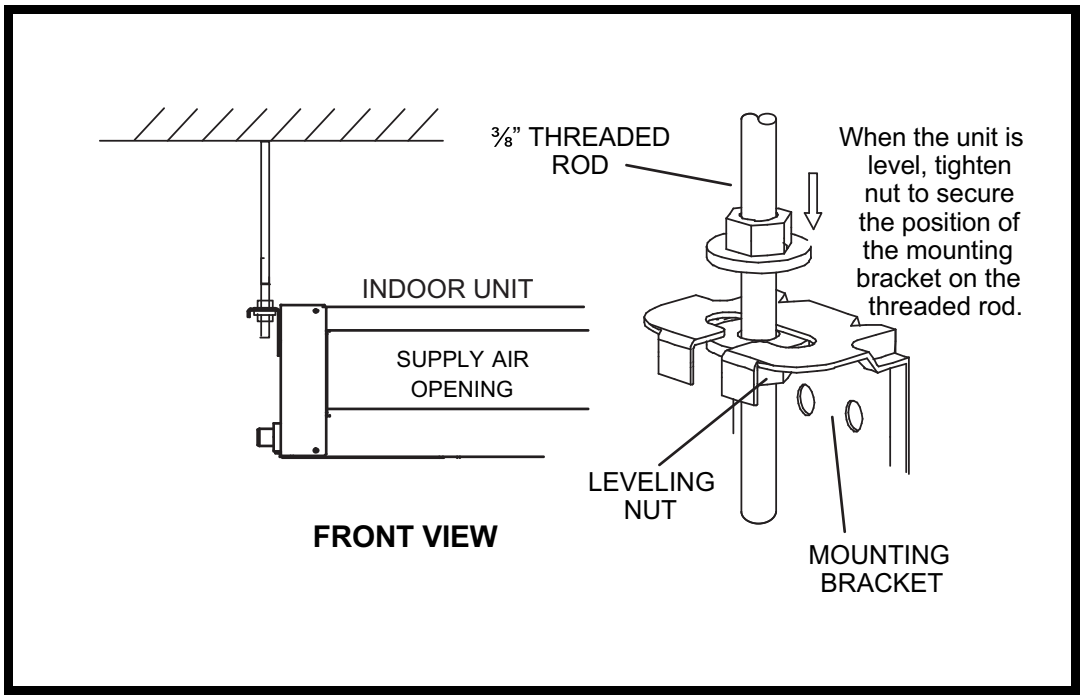

© 2021 Bryant Heating & Cooling Systems. All rights reserved.
Edition Date: 03/21
Form No: 40VMA048-B-3SD
A Carrier Company
Printed in U.S.A.
Replaces: 40VMA048-B-2SD

Manufacturer reserves the right to discontinue, or change at any time, specifications or designs without notice and without incurring obligations.