Installation and Maintenance Instructions

CONTENTS

Page
SAFETY CONSIDERATIONS 1
GENERAL 2
DIMENSIONS 4
FAN CURVE CHARACTERISTICS 7
INSTALLATION 10
Step 1 — Unpack and Inspect Units 10
Step 2 — Position the Unit 11
Step 3 — Mount the Unit 11
Step 4 — Connect Piping 12
Step 5 — Complete the Electrical Connections . 13
Step 6 — Installing the LED Display Panel 16
Step 7 — Position and Connect Controller 16
ACB INTERFACE 20
START UP 20
Pre-Start Check 20
System Operation Check 20
MAINTENANCE 21
Fan Assembly Maintenance 21
TROUBLESHOOTING 29
Replacement Parts 31
APPENDIX A - DIP SWITCH SETTINGS 32

SAFETY CONSIDERATIONS

Improper installation, adjustment, alteration, service, maintenance, or use can cause explosion, fire, electrical shock, or other conditions; which may cause death, personal injury or property damage. The qualified installer or agency must use factory-authorized kits or accessories when modifying this product.

Follow all safety codes. Wear safety glasses, protective clothing, and work gloves. Use quenching cloth for brazing operations. Have fire extinguisher available. Read these instructions thoroughly and follow all warnings or cautions included in the literature and attached to the unit. Consult local building codes and the current editions of the National Electrical Code (NEC) ANSI/NFPA (American National Standards Institute/National Fire Protection Association) 70. In Canada, refer to the current editions of the Canadian Electrical Code CSA (Canadian Standards Association) C22.1.

Understand the signal words — **DANGER**, **WARNING**, and **CAUTION**. **DANGER** identifies the most serious hazards, which result in severe personal injury or death. **WARNING** signifies hazards that could result in personal injury or death. **CAUTION** is used to identify unsafe practices, which would result in minor personal injury or product and property damage.

Recognize safety information. This is the safety-alert symbol (⚠). When this symbol is displayed on unit and in instructions or manuals, be alert to potential for personal injury.

⚠ WARNING

Electrical shock can cause personal injury and death. Shut off all power to this equipment during installation. There may be more than one disconnect switch. Tag all disconnect locations to alert others not to restore power until work is completed.

⚠ WARNING

DO NOT re-use compressor oil or any oil that has been exposed to the atmosphere. Dispose of oil per local codes and regulations. DO NOT leave refrigerant system open to air any longer than the actual time required to service the equipment. Seal circuits being serviced and charge with dry nitrogen to prevent oil contamination when timely repairs cannot be completed. Failure to follow these procedures may result in damage to equipment.

For information about replacement oil type and viscosity, see the Installation, Start-Up, and Service Instructions for the 38VMAH and 38VMAR outdoor units.

⚠ WARNING

DO NOT USE TORCH to remove any component. The system contains oil and refrigerant under pressure.

To remove a component, wear protective gloves and goggles and proceed as follows:

A. Shut off electrical power to unit.
B. Recover refrigerant to relieve all pressure from the system using both the high-pressure and low pressure ports.
C. Traces of vapor should be displaced with nitrogen and the work area should be well ventilated. Refrigerant in contact with an open flame produces toxic gases.
D. Cut the component connection tubing with a tubing cutter and remove the component from unit. Use a pan to catch any oil that may come out of the lines and as a gage for how much oil to add to the system.
E. Carefully unsweat remaining tubing stubs when necessary. Oil can ignite when exposed to torch flame.

Failure to follow these procedures may result in personal injury or death.

⚠ WARNING

When installing the equipment in a small space, provide adequate measures to avoid refrigerant concentration exceeding safety limits due to refrigerant leak.

In case of refrigerant leak during installation, ventilate the space immediately. Failure to follow this procedure may lead to personal injury.

Manufacturer reserves the right to discontinue, or change at any time, specifications or designs without notice and without incurring obligations.

GENERAL

The 40VMH high static ducted indoor fan coil unit offers simple operation and long service with proper installation, operation, and regular maintenance. The equipment is initially protected under the manufacturer's standard warranty; however, the warranty is provided under the condition that the steps outlined in this manual for initial inspection, proper installation, regular periodic maintenance, and everyday operation of the unit be followed in detail.

This manual should be fully reviewed in advance before initial installation, start-up, and any maintenance. Contact your local sales representative or the factory with any questions BEFORE proceeding.

See Fig. 1 for model number nomenclature. Table 1 shows components that may or may not be used for a particular installation. Table 2, "40VMH Physical Data," on page 3 lists physical data for each unit size. Figures , 3, and 4 show unit's dimensions. Fig. 5 – Fig. 11 show fan performance curves.

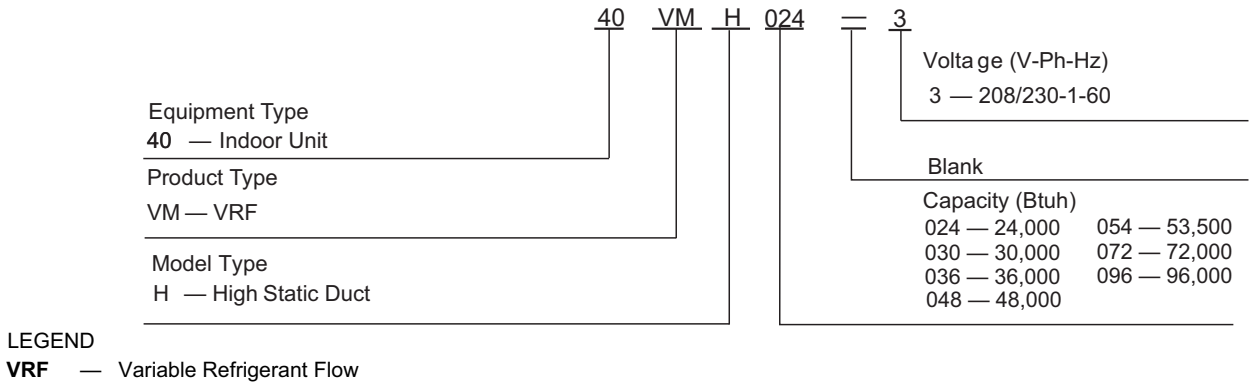

Fig. 1 —Model Number Nomenclature

Table 1 —Components Shipped with Unit

NAME	OUTLINE	QUANTITY	FUNCTION
PQ connection wire		2	Connect outdoor unit, indoor unit and sub MDC
Pipe insulation material		2	Heat insulation
Condensate connection		1 (024 -054)	For drainage
Clamp		1 (024 - 054)	Connect the drain hose to the condensate connection
Condensate connection		1 (072 - 096)	For drainage
Adhesive tape for seal		1 (072 - 096)	Connect the drain hose to condensate connection
Copper nut		1	Use for pipe connection
Copper pipes		2 (024 - 054) 1 (072 - 096)	Use for inlet and outlet connection
Connecting wire		1	For occupancy sensor
Led Display		1	Operation and error display

LEGEND
MDC - Multi-port Distribution Controller

Table 2 — 40VMH Physical Data

UNIT 40VMH	024	030	036	048	054	072	096
POWER SUPPLY (V-Ph-Hz)	208/230-1-60						
COOLING CAPACITY (Btuh)	24,000	30,000	36,000	48,000	53,500	72,000	96,000
HEATING CAPACITY (Btuh)	27,000	34,000	40,000	54,000	60,000	81,000	108,000
INDOOR FAN MOTOR							
Type	DC						
Input (W)	81	140	190	220	420	245*2	395*2
INDOOR COIL							
Number of Rows	2	3		4			
Fin Spacing (fins/in.)	16					15	
Fin Type	Hydrophilic Aluminum						
Tube Diameter, OD (in.)	$^{3}/_{8}$						
Tube Type	Inner Groove						
Number of Circuits	4	7				20	
INDOOR AIRFLOW (cfm)							
Low	524	647	882	1041	1412	1559	2076
Medium	600	753	1029	1200	1618	1794	2400
High	735	971	1188	1429	1835	2235	2824
INDOOR EXTERNAL STATIC PRESSURE (High), in. wg	0.8					1.0	
INDOOR NOISE LEVEL (dBA)							
Low	44.7	44.2	49.1	48.3	52	48.7	52.4
Medium	47.8	48.1	52.8	51.8	55.8	52.2	54.7
High	51	52	55.5	54.9	58.1	55.9	56.6
UNIT							
Unit Dimensions W x H x D (in.)	$37^{-1}/_{2}$ x $16^{-1}/_{2}$ x $27^{-3}/_{16}$			$51^{-3}/_{16}$ x $16^{-1}/_{2}$ x $27^{-3}/_{16}$		$56^{-11}/_{16}$ x 20 x $36^{-3}/_{8}$	
Packing Dimensions W x H x D (in.)	$42^{-7}/_{8}$ x $21^{-3}/_{4}$ x $30^{-1}/_{4}$			$56^{-1}/_{2}$ x 22 x $30^{-1}/_{4}$		$59^{-3}/_{8}$ x 26 x 39	
Net/Gross Weight (lb)	110/168.4	114.6/171		159.2/231.5		254.2/342.8	
REFRIGERANT TYPE	R-410A						
EXPANSION DEVICE	EEV						
DESIGN PRESSURE, H/L (psig)	580/320						
REFRIGERANT PIPING (in.)							
Liquid Side, OD	$^{3}/_{8}$						
Suction Side, OD	$^{5}/_{8}$					$^{7}/_{8}$	
CONNECTING WIRING							
Power Wiring	Sized per NEC and Local Codes Based on Nameplate Electrical Data						
Signal Wiring	2-Core Stranded Shielded Cable 18 AWG						
DRAINAGE WATER PIPE DIAMETER, OD (in.)	1					$1\ ^{5}/_{8}$	
Condensate Pumps	Factory-installed condensate pump (maximum lift of 27.5 in.)					None	

LEGEND
EEV - Electronic Expansion Valve
NEC - National Electrical Code
AWG - American Wire Gage

DIMENSIONS

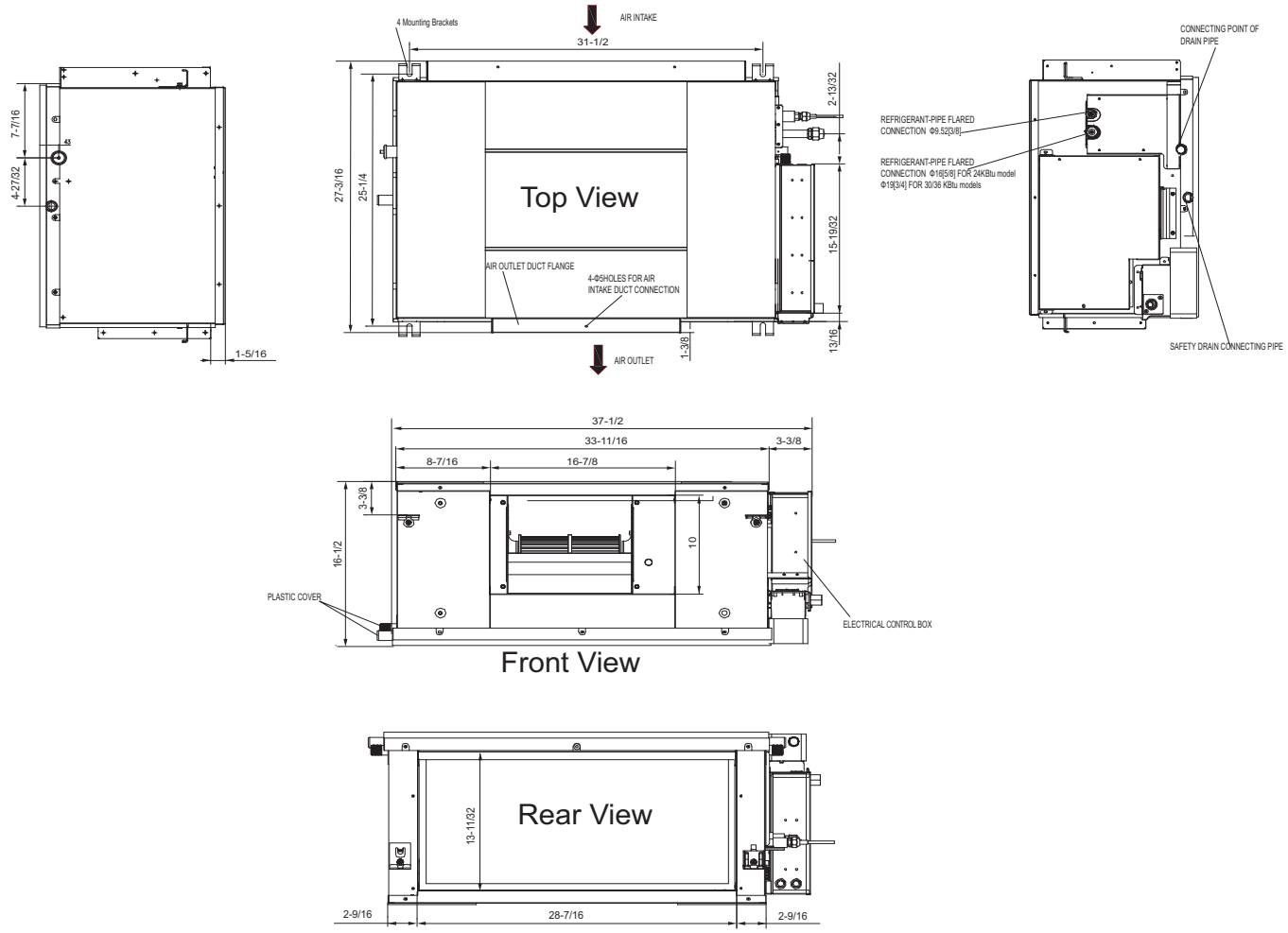

NOTE: All dimensions are shown in inches.

Fig. 2 —40VMH024-036 Dimensions

DIMENSIONS (Cont.)

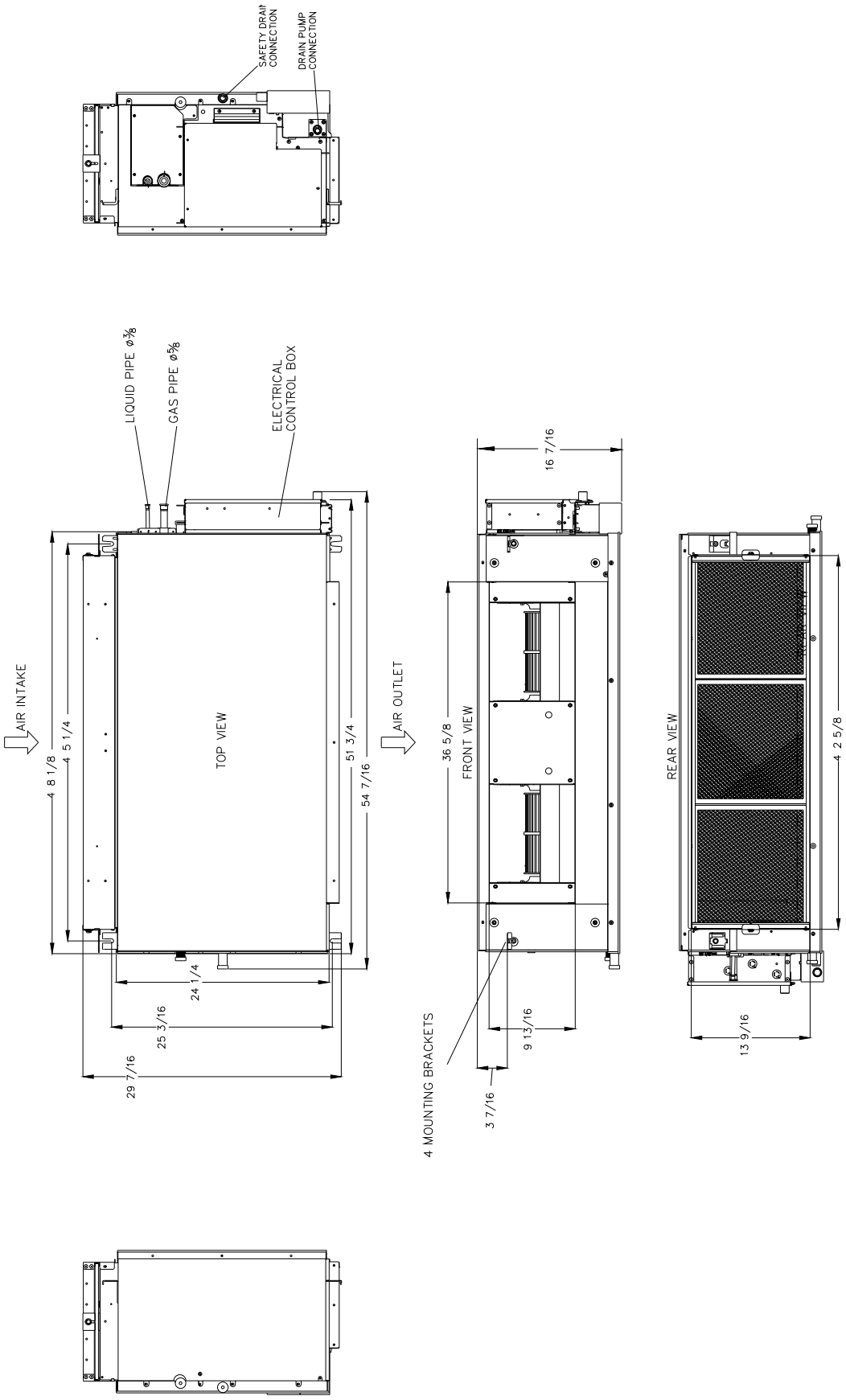

NOTE: All dimensions are shown in inches.

Fig. 3 —40VMH048 and 054 Dimensions

DIMENSIONS (Cont.)

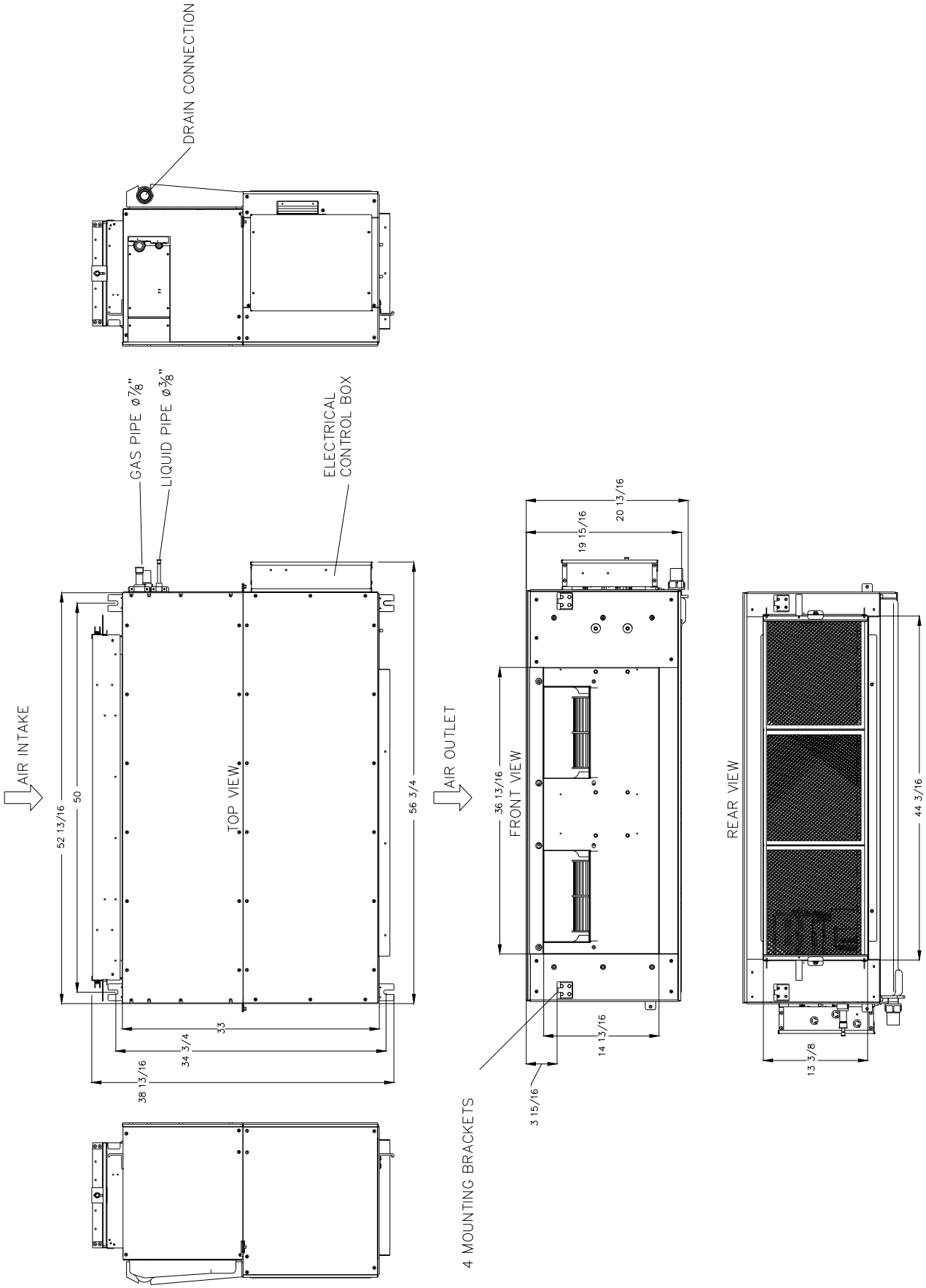

NOTE: All dimensions are shown in inches.

Fig. 4 —40VMH072 and 096

FAN CURVE CHARACTERISTICS

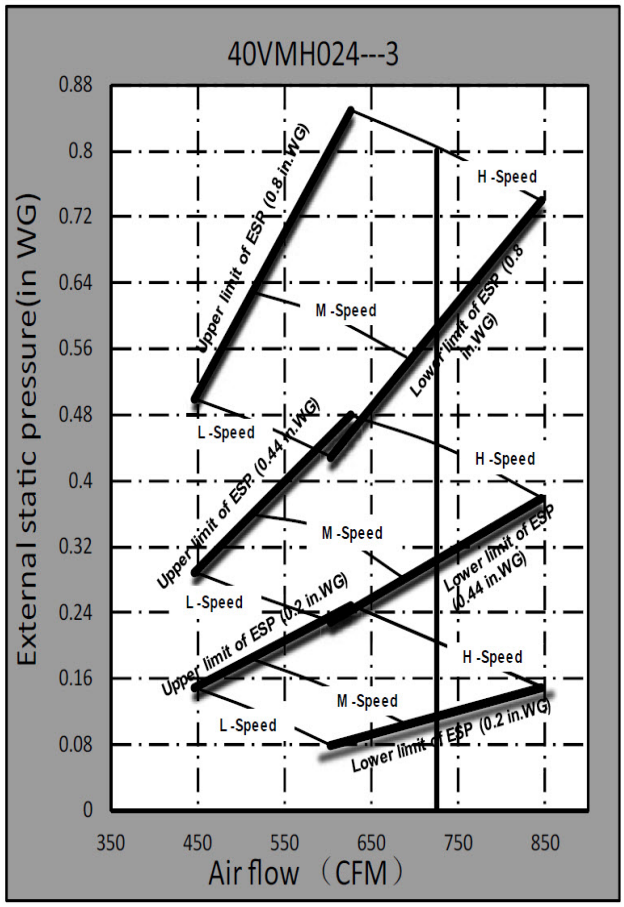

Fig. 5 —Size 024

ESP	Fan Speed	Range of Available Airflow Rate in H-Speed					
		Max Point		Rating Point		Min Point	
		Max CFM	SP (in.)	Mid CFM	SP (in.)	Min CFM	SP (in.)
0.20	H	845	0.15	735	0.20	625	0.25
0.24			0.19		0.24		0.29
0.28			0.23		0.28		0.33
0.32			0.27		0.32		0.37
0.36			0.31		0.36		0.41
0.40			0.35		0.40		0.45
0.44			0.38		0.44		0.48
0.48			0.42		0.48		0.52
0.52			0.46		0.52		0.56
0.56			0.50		0.56		0.60
0.60			0.54		0.60		0.64
0.64			0.58		0.64		0.68
0.68			0.62		0.68		0.73
0.72			0.66		0.72		0.77
0.76			0.70		0.76		0.81
0.80			0.74		0.80		0.85

LEGEND
ESP - External Static Pressure
SP - Static Pressure

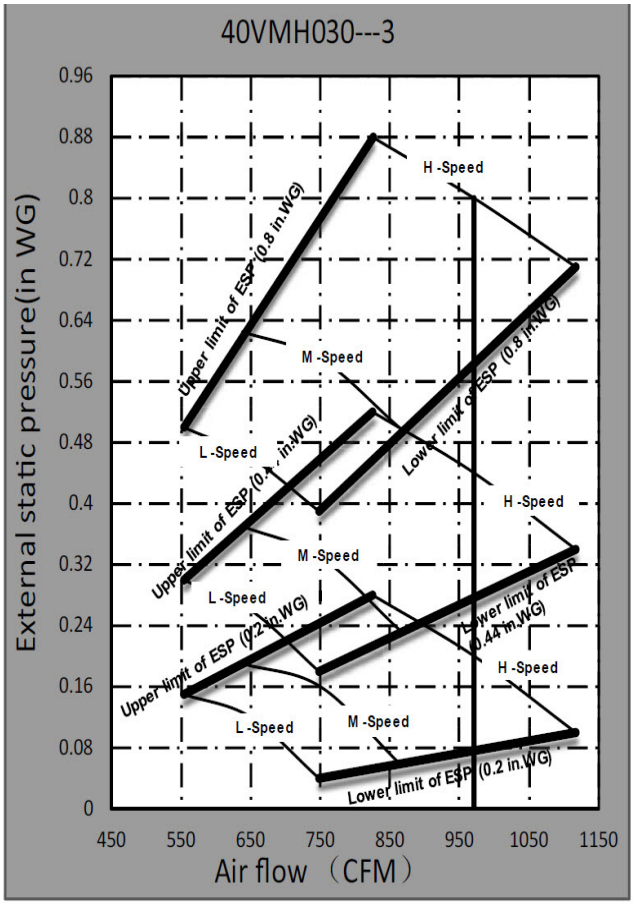

Fig. 6 —Size 030

ESP	Fan Speed	Range of Available Airflow Rate in H-Speed					
		Max Point		Rating Point		Min Point	
		Max CFM	SP (in.)	Mid CFM	SP (in.)	Min CFM	SP (in.)
0.20	H	1117	0.10	971	0.20	852	0.28
0.24			0.14		0.24		0.32
0.28			0.18		0.28		0.36
0.32			0.22		0.32		0.40
0.36			0.26		0.36		0.44
0.40			0.30		0.40		0.48
0.44			0.34		0.44		0.52
0.48			0.38		0.48		0.56
0.52			0.42		0.52		0.60
0.56			0.46		0.56		0.64
0.60			0.50		0.60		0.68
0.64			0.55		0.64		0.72
0.68			0.59		0.68		0.76
0.72			0.63		0.72		0.81
0.76			0.67		0.76		0.84
0.80			0.71		0.80		0.88

LEGEND
ESP - External Static Pressure
SP - Static Pressure

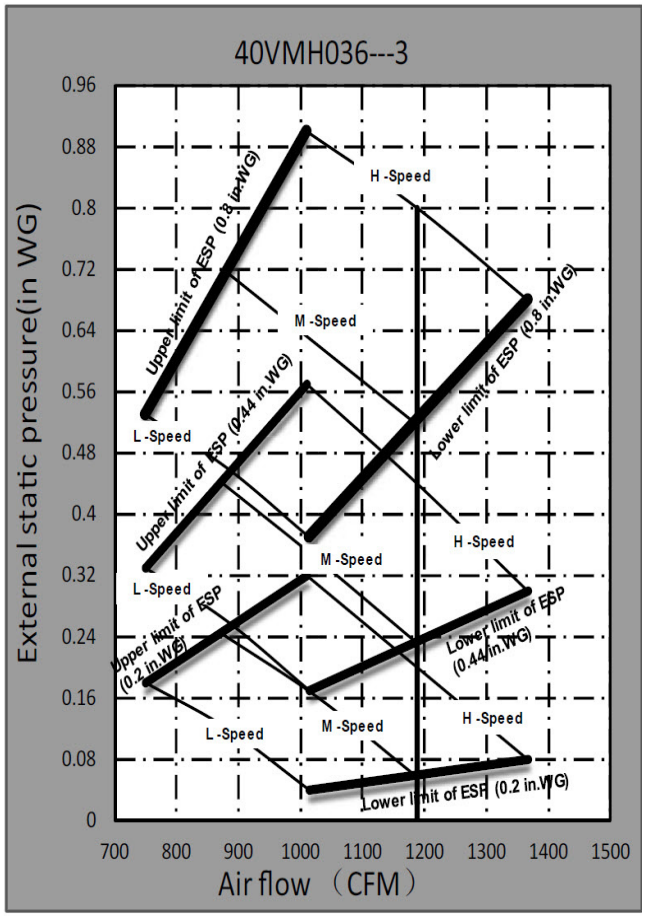

Fig. 7 —Size 036

ESP	Fan Speed	Range of Available Airflow Rate in H-Speed					
		Max Point		Rating Point		Min Point	
		Max CFM	SP (in.)	Mid CFM	SP (in.)	Min CFM	SP (in.)
0.20	H	1366	0.08	1188	0.20	1010	0.32
0.24			0.12		0.24		0.36
0.28			0.16		0.28		0.40
0.32			0.20		0.32		0.44
0.36			0.24		0.36		0.48
0.40			0.28		0.40		0.52
0.44			0.30		0.44		0.57
0.48			0.34		0.48		0.61
0.52			0.38		0.52		0.65
0.56			0.42		0.56		0.69
0.60			0.46		0.60		0.73
0.64			0.50		0.64		0.77
0.68			0.56		0.68		0.78
0.72			0.60		0.72		0.82
0.76			0.64		0.76		0.86
0.80			0.68		0.80		0.90

LEGEND
ESP - External Static Pressure
SP - Static Pressure

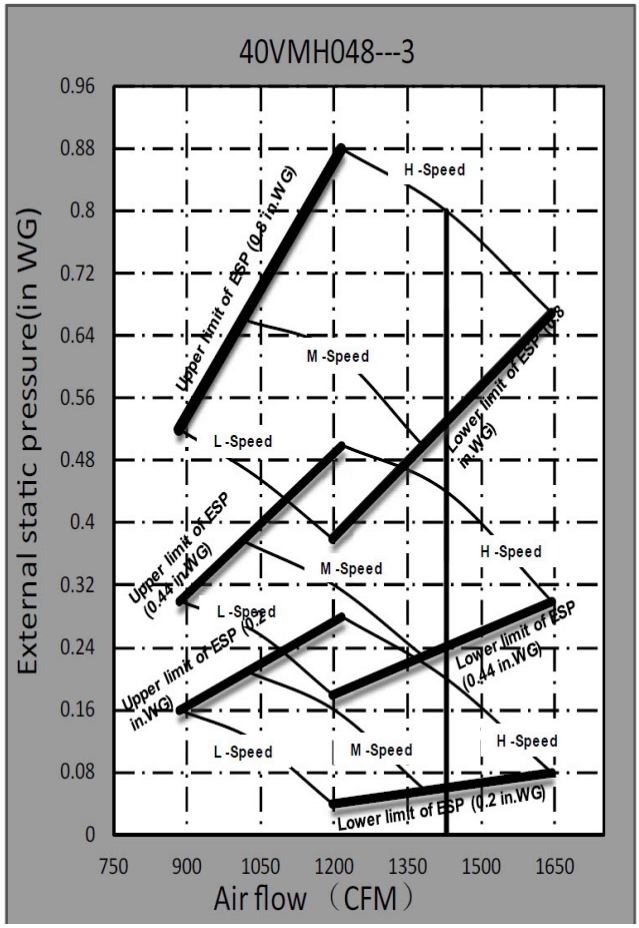

Fig. 8 —Size 048

ESP	Fan Speed	Range of Available Airflow Rate in H-Speed					
		Max Point		Rating Point		Min Point	
		Max CFM	SP (in.)	Mid CFM	SP (in.)	Min CFM	SP (in.)
0.20	H	1643	0.08	1429	0.20	1215	0.28
0.24			0.12		0.24		0.32
0.28			0.16		0.28		0.36
0.32			0.20		0.32		0.40
0.36			0.24		0.36		0.44
0.40			0.28		0.40		0.48
0.44			0.30		0.44		0.50
0.48			0.34		0.48		0.54
0.52			0.38		0.52		0.58
0.56			0.42		0.56		0.62
0.60			0.46		0.60		0.66
0.64			0.50		0.64		0.70
0.68			0.55		0.68		0.76
0.72			0.59		0.72		0.80
0.76			0.63		0.76		0.84
0.80			0.67		0.80		0.88

LEGEND
ESP - External Static Pressure
SP - Static Pressure

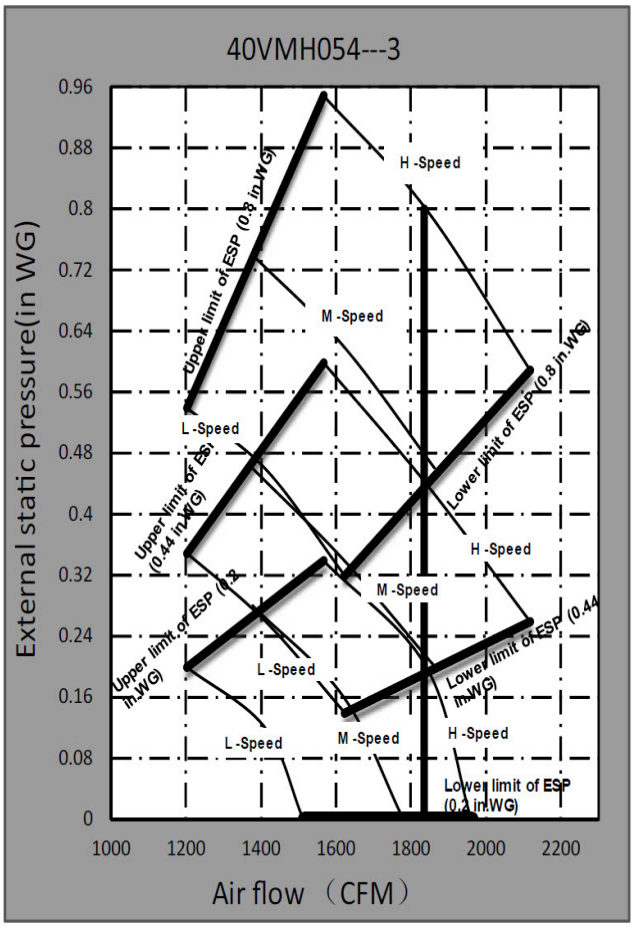

Fig. 9 —Size 054

ESP	Fan Speed	Range of Available Airflow Rate in H-Speed					
		Max Point		Rating Point		Min Point	
		Max CFM	SP (in.)	Mid CFM	SP (in.)	Min CFM	SP (in.)
0.20	H	1959	0.00	1835	0.20	1560	0.34
0.24		2110	0.03		0.24		0.38
0.28			0.07		0.28		0.42
0.32			0.11		0.32		0.46
0.36			0.15		0.36		0.50
0.40			0.19		0.40		0.54
0.44			0.26		0.44		0.60
0.48			0.30		0.48		0.64
0.52			0.34		0.52		0.68
0.56			0.38		0.56		0.72
0.60			0.42		0.60		0.76
0.64			0.45		0.64		0.80
0.68			0.47		0.68		0.83
0.72			0.51		0.72		0.87
0.76			0.55		0.76		0.91
0.80			0.59		0.80		0.95

LEGEND
ESP - External Static Pressure
SP - Static Pressure

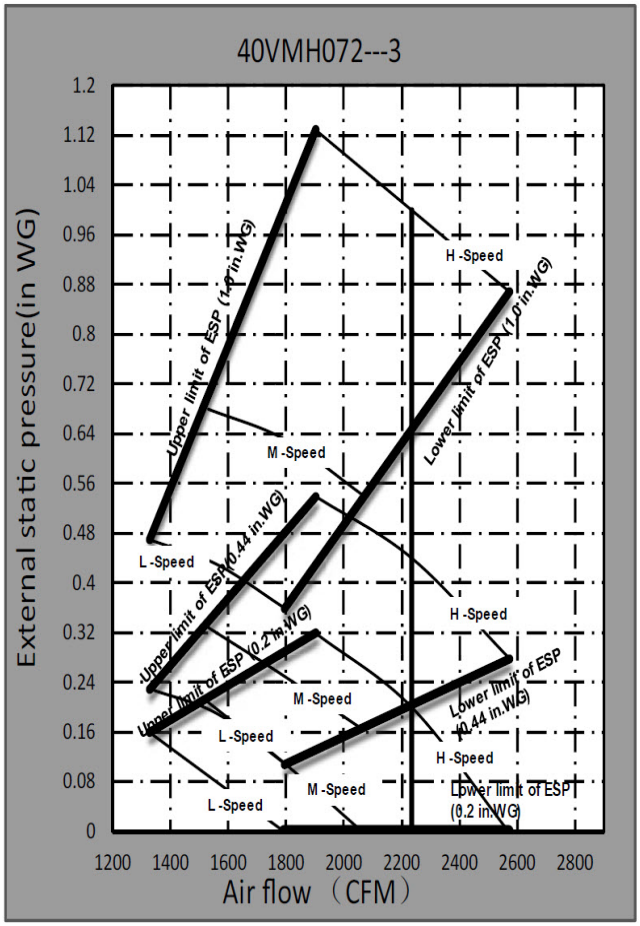

Fig. 10 —Size 072

ESP	Fan Speed	Range of Available Airflow Rate in H-Speed					
		Max Point		Rating Point		Min Point	
		Max CFM	SP (in.)	Mid CFM	SP (in.)	Min CFM	SP (in.)
0.20	H	2570	0.00	2235	0.20	1900	0.32
0.24			0.09		0.24		0.36
0.28			0.13		0.28		0.40
0.32			0.17		0.32		0.44
0.36			0.21		0.36		0.48
0.40			0.25		0.40		0.52
0.44			0.28		0.44		0.54
0.48			0.32		0.48		0.58
0.52			0.36		0.52		0.62
0.56			0.40		0.56		0.66
0.60			0.44		0.60		0.70
0.64			0.48		0.64		0.74
0.68			0.52		0.68		0.78
0.72			0.59		0.72		0.85
0.76			0.63		0.76		0.89
0.80			0.67		0.80		0.93
0.84			0.71		0.84		0.97
0.88			0.75		0.88		1.01
0.92			0.79		0.92		1.05
0.96			0.83		0.96		1.09
1.00			0.87		1.00		1.13

LEGEND
ESP - External Static Pressure
SP - Static Pressure

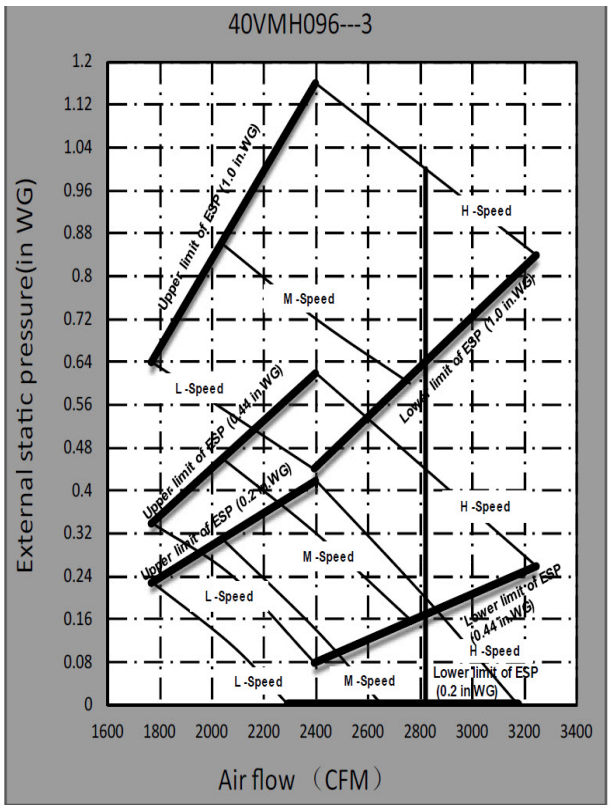

Fig. 11 —Size 096

ESP	Fan Speed	Range of Available Airflow Rate in H-Speed					
		Max Point		Rating Point		Min Point	
		Max CFM	SP (in.)	Mid CFM	SP (in.)	Min CFM	SP (in.)
0.20	H	3176	0.00	2824	0.20	2400	0.42
0.24		3248	0.04		0.24		0.45
0.28			0.07		0.28		0.49
0.32			0.12		0.32		0.52
0.36			0.16		0.36		0.55
0.40			0.20		0.40		0.59
0.44			0.26		0.44		0.62
0.48			0.30		0.48		0.66
0.52			0.34		0.52		0.70
0.56			0.38		0.56		0.74
0.60			0.42		0.60		0.78
0.64			0.46		0.64		0.82
0.68			0.50		0.68		0.86
0.72			0.54		0.72		0.90
0.76			0.58		0.76		0.94
0.80			0.64		0.80		0.96
0.84			0.68		0.84		1.00
0.88			0.72		0.88		1.04
0.92			0.76		0.92		1.08
0.96			0.80		0.96		1.12
1.00			0.84		1.00		1.16

LEGEND
ESP - External Static Pressure
SP - Static Pressure

NOTE: (For Fig. 5 - Fig. 11):

1. There are multiple ESP settings available for each ducted unit.
2. All fan curves show examples of fan characteristics of the "MAX. ESP," "RATING ESP," and "MIN. ESP" settings. These curves are shown for High (H), Medium (M), and Low (S) speeds as selected by the user at the controller.
3. All tables show air flows at “H-Speed” for each ESP setting.
4. ESP settings are listed in the first column of each table.
5. Select ESP setting according to the connected ductwork system.
6. Refer to the Wired Controller manual for details on static pressure settings.

INSTALLATION

Step 1 — Unpack and Inspect Units — Units are packaged for shipment to avoid damage during normal transit and handling. It is the receiving party’s responsibility to inspect the equipment upon arrival. Any obvious damage to the carton and/or its contents should be reported on the bill of lading, and a claim should be filed with the transportation company and the factory. The unit should always be stored in a dry place and in the proper orientation as marked on the carton.

⚠CAUTION

To avoid equipment damage, do not lift unit by the drain pipe or refrigerant piping. Unit should be lifted using the mounting brackets.

After determining the condition of the carton exterior, carefully remove each unit from the carton and inspect for hidden damage. Check to make sure that items such as the accessory kit, thermostats, and the controller are accounted for whether packaged separately or shipped at a later date. Any hidden damage should be recorded, a claim should be filed with the transportation company, and the factory should be notified. In the event a claim for shipping damage is filed, the unit, shipping carton, and all packing must be retained for physical inspection by the transportation company. All units should be stored in the factory shipping carton with internal packaging in place until installation.

PROTECTING UNITS FROM DAMAGE — Do not apply force or pressure to the coil, piping, or drain stub-outs during handling. All units should be handled by the chassis or as close as possible to the unit mounting point locations.

The unit must always be properly supported. Temporary supports used during installation or service must be adequate to hold the unit securely. To maintain warranty, protect units against hostile environments (such as rain, snow or extreme temperature), theft, vandalism, and debris on jobsite. Equipment covered in this manual is not suitable for outdoor installations.

Do not allow foreign material to fall into drain pan. Prevent dust and debris from being deposited on the motor, fan wheels, and coils. Failure to do so may have serious adverse effects on unit operation. In case of motor and blower assembly, debris deposits may result in immediate or premature failure. Failure of any unit caused by deposits of foreign material on the motor or blower wheels will not be covered by the manufacturer’s warranty. Some units and/or job conditions may require some form of temporary covering during construction.

PREPARING JOB SITE FOR UNIT INSTALLATION — To save time and to reduce possible costly errors, set up a complete sample installation in a typical room at the job site. Check all critical dimensions such as pipe, wire, and duct connections requirements. Refer to job drawings and product dimensional drawings as required. Instruct all trades in their parts of the installation. Units must be installed in compliance with all applicable local code requirements.

IDENTIFYING AND PREPARING UNITS — Be sure power requirements match the available power source. Refer to the unit nameplate and wiring diagram. In addition:

- Check all tags on unit to determine if shipping screws are to be removed, and remove the screws as directed.
- Rotate the fan wheel by hand to ensure that the fan is unrestricted and can rotate freely. Check for shipping damage and fan obstructions. Adjust the blower motor as required.

Step 2 — Position the Unit —

⚠DANGER

Units must not be installed where they may be exposed to potentially explosive or flammable atmosphere. If this instruction is not followed exactly, a fire or explosion may result, causing property damage, personal injury, or death.

Install the unit in a location that meets the following requirements:

- Allow adequate space for installation, service clearance, piping, electrical connections, and necessary ductwork. For specific unit dimensions, refer to Table 2, and Figs. , 3, and 4. Allow clearance according to local and national codes.
- Confirm that the ceiling is able to support the weight of the unit. See Table 2 for nominal weight.
- There should be enough room within the false ceiling for installation and maintenance. See Fig. 12.
- The false ceiling should be horizontal and leveled.
- Install the unit in a location within the room that allows uniform air flow in all directions.

Select the unit position with the following points in mind:

- The unit should be installed in a position that is suitable to support the total weight of the unit, refrigerant piping, and condensate.
- Proper access should be provided for maintenance for refrigerant piping, EEV (electronic expansion valve), electrical box, and condensate pump. A 2-ft clearance is recommended all around the unit.

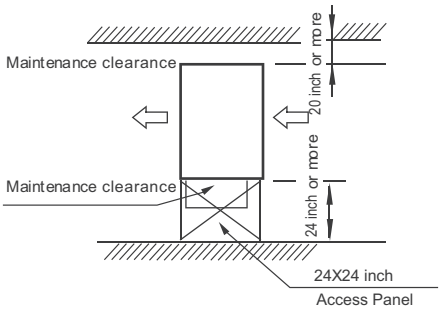

Fig. 12 —Maintenance Space Requirements

- The unit should not be positioned directly above any obstruction.
- The unit must be installed square and level.

IMPORTANT: Be sure that the ceiling grid is supported separately from the unit. The ceiling grid must not be supported by any part of the unit or any associated wiring or piping work.

Step 3 — Mount the Unit —

Mount the unit using the four mounting brackets shown in Fig. 2. Use 3/8-in. all-threaded rod. For unit weight, see Table 2.

MOUNTING UNIT — The unit can now be lifted on to the hanging rods for mounting.

1. Use rods and fasteners to suspend the unit at the factory provided mounting holes.
2. Adjust height of the unit until bottom is level with false ceiling with adequate space to provide enough pitch for the drain.
3. Secure the unit in position with locknuts and washers on both sides of the mounting bracket. Ensure that the threaded rod does not protrude more than two inches below the mounting brackets as shown in Fig. 13.

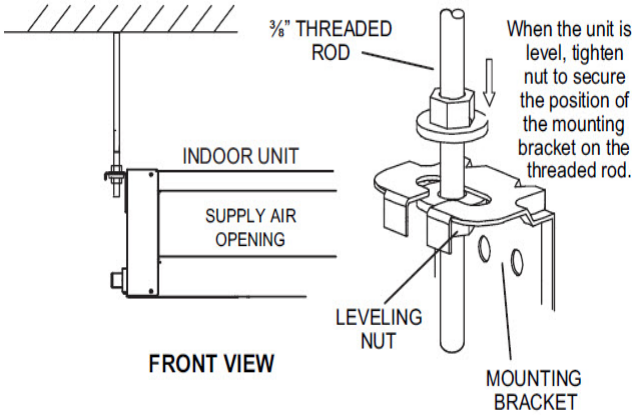

Fig. 13 —Threaded Rod

INSTALLING DUCT — Connect the return and supply ducts to the duct collars provided on the unit. Adequate distance between the return and supply diffusers should be maintained to avoid short circuit of air within the space. The filter is located on the return side (rear) of the unit.

Step 4 — Connect Piping —

CONDENSATE PIPING — The unit is supplied with a one-inch OD drain connection to connect copper or PVC drain piping. See Fig. 14 and 15. Units of capacity size 24–54 kBtu/h come with a factory-installed condensate pump. The maximum pump lift is 27-1/2 inches. Units of capacity size 72–96 kBtu/h do not have a factory-installed condensate pump.

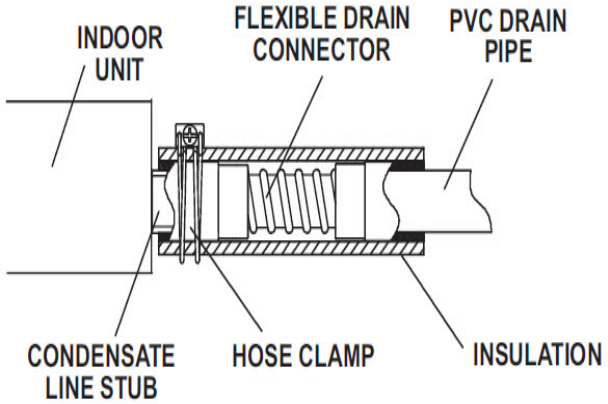

Fig. 14 —Condensate Drain Connection (024 - 054)

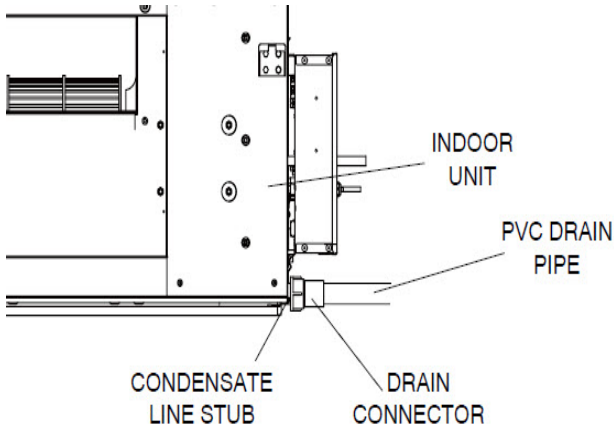

Fig. 15 —Condensate Drain Connection (072 - 096)

Follow these recommendations when installing condensate piping:

- The highest point in the condensate piping should be as close to the unit as possible. See Fig. 16.
- Condensate piping should slope downward in the direction of condensate flow with a minimum gradient of 1 inch per 100 inches. See Fig. 17.

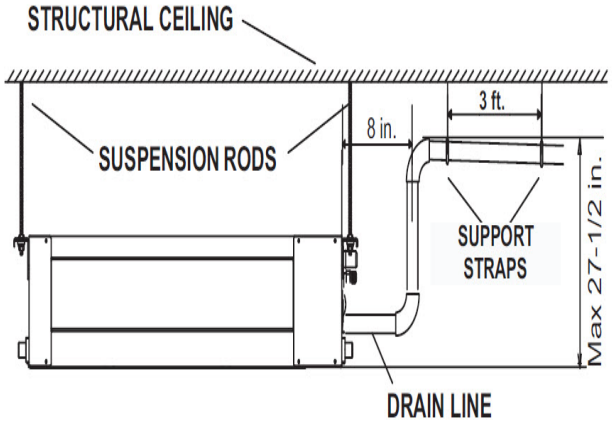

Fig. 16 —Condensate Piping

- When multiple units are connected to a common condensate drain, ensure that the drain is large enough to accommodate the volume of condensate from all units. It is also recommended to have an air vent in the condensate piping to prevent air lock.
- Condensate piping must not be installed where it may be exposed to freezing temperatures.

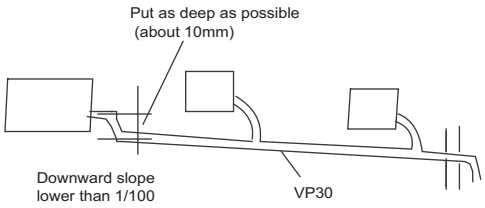

Fig. 17 —Using a Main Drain to Serve Multiple Indoor Units

- Sizes 072-096 do not have a factory-installed condensate pump and are “drawn through” fans that create suction. Therefore, a condensate trap is required. See Fig. 18.

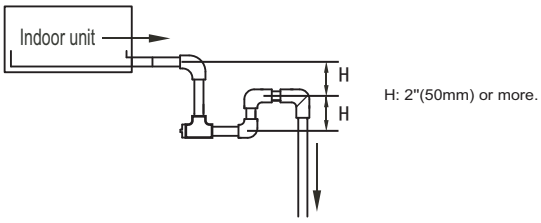

Fig. 18 —Trap at Piping End

- For gravity drain applications for sizes 024-054, CN18 can be disconnected to disable factory condensate pump.
- CN5 dry contract input can be used to interlock external safeties such as a float switch.

REFRIGERANT PIPING —

⚠ CAUTION

When connecting from an indoor unit to an outdoor unit, the isolation valve at outdoor unit should be in closed position throughout the refrigerant piping process.

Failure to follow this procedure may result in equipment damage.

When connecting refrigerant piping from an indoor unit to an outdoor unit, follow these guidelines:

- Check the maximum height drop and length of refrigerant piping between the indoor and outdoor units. To ensure the drop and length are acceptable, refer to the refrigerant piping allowable limits in the outdoor unit installation manual.
- The number of bends in the refrigeration piping must be less than 15.
- Refrigerant piping connection between indoor and outdoor units should be performed once the units are secured at their respective installation locations.
- The refrigeration piping starts at the indoor unit and ends at the outdoor unit or Multi-port Distribution Controller (MDC) (Heat Recovery systems).
- The refrigerant piping should be dry and free of dust and other impurities.
- The bending angle of the refrigerant pipe should not exceed 90° and the bending radius should be as large as possible to prevent any breakage in piping.
- Use proper cutting and flaring tools to avoid leakage.
- Use a torque wrench for flare nuts. Refer to Table 3 for flare nut torque recommendations.

Table 3 —Flare Nut Torque Recommendations

Outside Diameter	Recommended Torque (FT-LB)
1/4	15
3/8	26
1/2	41
5/8	48

- Before insulating the suction and liquid refrigeration pipes, perform pressure and leak tests. For details, see the outdoor unit installation manual. Insulating both suction and liquid refrigerant pipes is mandatory.
- Vacuuming and charging of the system should be carried out as described in the outdoor unit installation manual.

Step 5 — Complete the Electrical Connections —

Installation of wiring must conform with local building codes and with National Electric Code ANSI/NFPA 70, current editions. Units must be electrically grounded in conformance with the code. In Canada, wiring must comply with CSA C22.1, Electrical Code.

⚠ WARNING

Electrical shock can cause personal injury or death. Disconnect the power supply before making wiring connections. There may be more than one disconnect switch. Tag all disconnect locations to alert others not to restore power until work is completed.

⚠ WARNING

All units must be wired strictly in accordance with the wiring diagram furnished with the unit. Any wiring different from the wiring diagram could result in personal injury and property damage.

⚠ CAUTION

Any original factory wiring that requires replacement must be replaced with wiring material having a temperature rating of at least 105ºC.

Ensure supply voltage to the unit, as indicated on the serial plate, is not more than 10% over the rated voltage or 10% under the rated voltage.

Failure to follow these recommendations may result in equipment damage.

This equipment in its standard form is designed for an electrical supply of 208/230-1-60. Any damage to or failure of units caused by incorrect wiring or voltage is not covered by the warranty.

Electric wiring must be sized to carry the full load amp draw of the motor, starter, and any other controls that are used with the unit. See Table 4 for electrical data.

Table 4 —40VMH Electrical Data

40VMH Unit Size	Power Supply	
	MCA	MOPD
24	5.7	15
30	7.1	
36	7.3	
48	7.6	
54	7.8	
72	9.6	
96	10.2	

LEGEND
MCA - Minimum Circuit Amps
MOPD - Maximum Overcurrent Protective Device

After the pipe work is complete, the electrical supply can be connected by routing the cable through the appropriate casing holes or knockouts and connecting the supply and ground cables to the unit's power terminal.

Be sure the power wiring and control wiring do not cross, as this might cause disturbance on the controls side. See Fig. 19 and 20 for the wiring diagram.

NOTE: The indoor unit requires its own power supply. Indoor units are not powered through outdoor units.

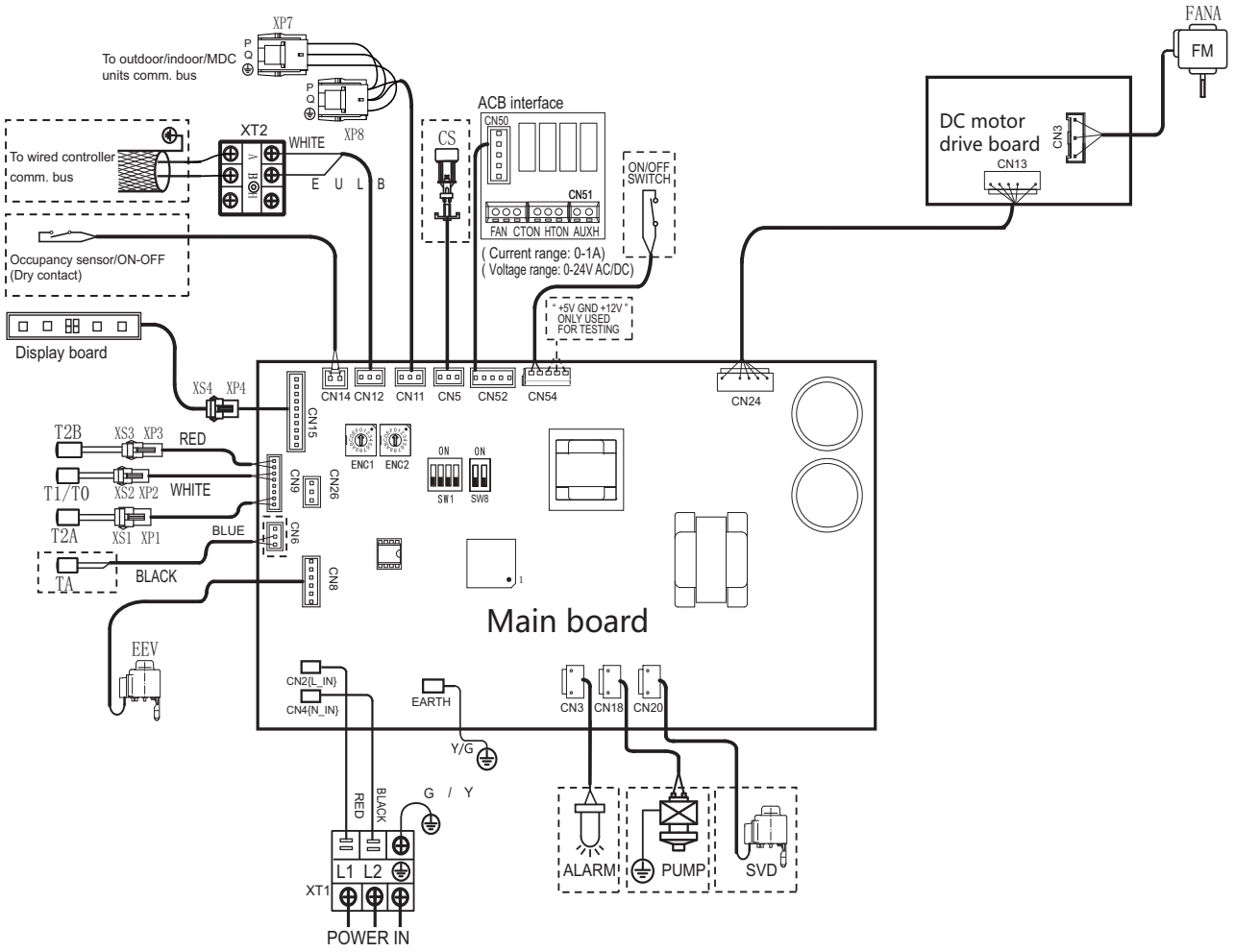

Fig. 19 —40VMH024 - 054 Typical Wiring Diagram

LEGEND:

NOTE: Field wiring must use copper conductors only.

ACB	— Auxiliary Control Board
ALARM	— Warning Lamp
AUXH	— Output for Auxiliary Heat
CS	— Condensate Switch
CTON	— Output for Cooling Operation
EEV	— Electronic Expansion Valve
FAN	— Output for Fan Operation
FM	— Indoor Fan Motor
HTON	— Output for Heating Operation
PUMP	— Pump Motor
SVD	— Solenoid Valve
T1/T0	— Room Temperature Sensor
T2A	— Inlet Pipe Temperature Sensor
T2B	— Outlet Pipe Temperature Sensor
XP1-8	— Connectors
XS1-4	— Connector
XT1-2	— Terminal Block
----------	Optional Component or Field Wiring

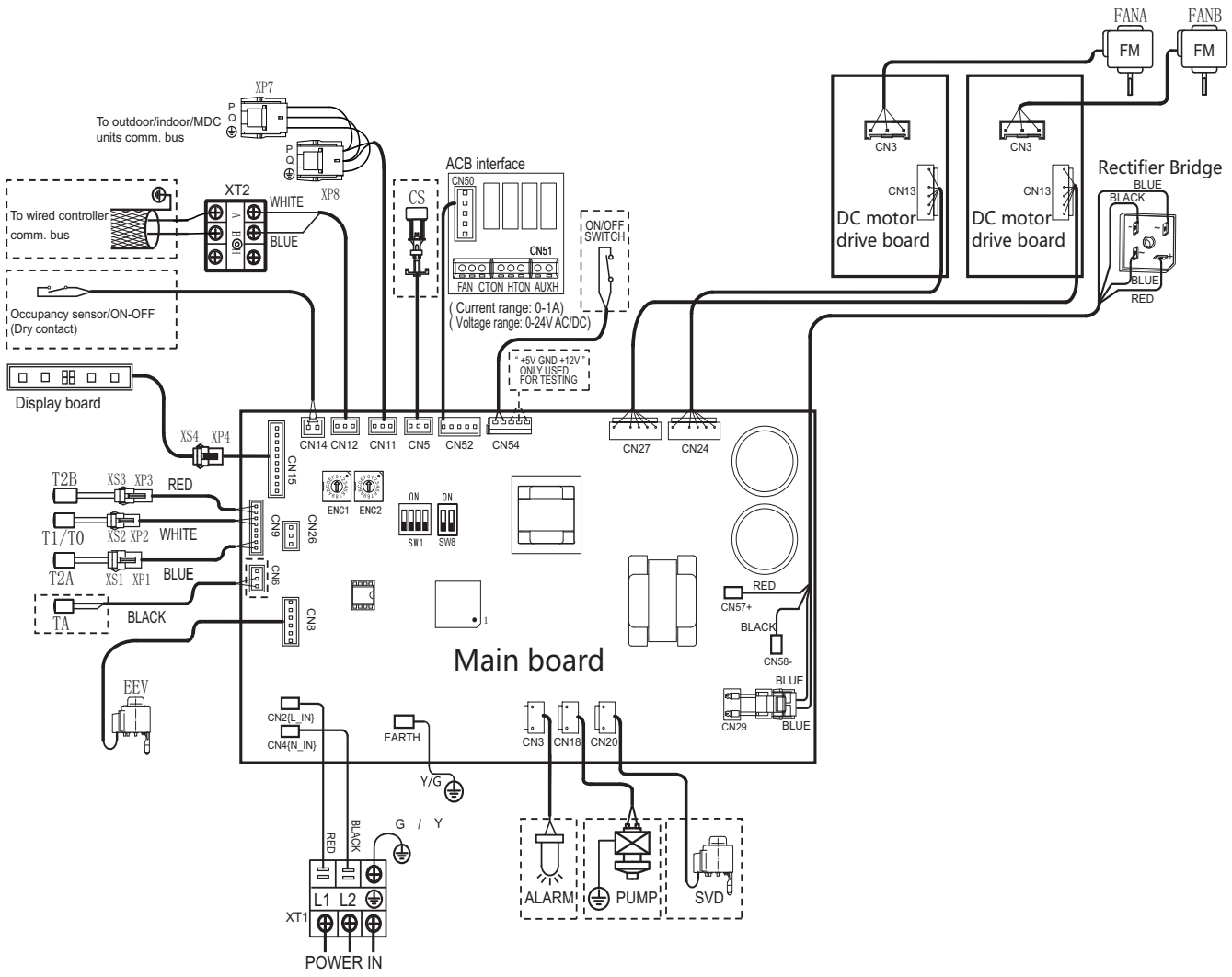

Fig. 20 —40VMH072 - 096 Typical Wiring Diagram

LEGEND:

NOTE: Field wiring must use copper conductors only.

ACB	— Auxiliary Control Board
ALARM	— Warning Lamp
AUXH	— Output for Auxiliary Heat
CS	— Condensate Switch
CTON	— Output for Cooling Operation
EEV	— Electronic Expansion Valve
FAN	— Output for Fan Operation
FM	— Indoor Fan Motor
HTON	— Output for Heating Operation
PUMP	— Pump Motor
SVD	— Solenoid Valve
T1/T0	— Room Temperature Sensor
T2A	— Inlet Pipe Temperature Sensor
T2B	— Outlet Pipe Temperature Sensor
XP1-8	— Connectors
XS1-4	— Connector
XT1-2	— Terminal Block

---------- Optional Component or Field Wiring

Step 6 — Installing the LED Display Panel —

1. The display panel has buckles on the bottom that are used to secure it to the control box. See Fig. 21.

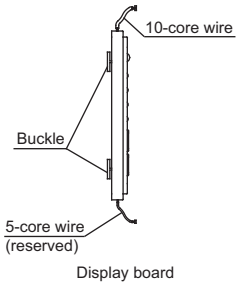

Fig. 21 —LED Display Panel

2. Insert the buckles into the grooves in the electronic control box, and slide the display panel horizontally to lock in place. See Figs. 22 and 23.

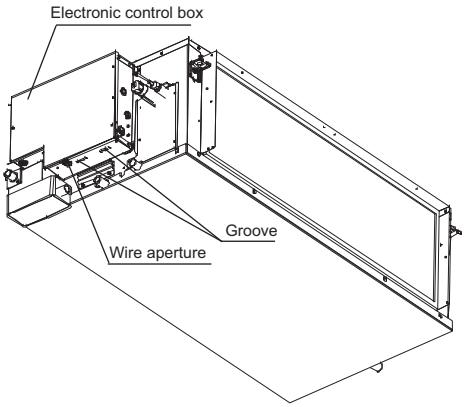

Fig. 22 —LED Display Panel Installation Location

3. Connect the 10-core wire of the display board to control board assembly through wire aperture on electronic control box.

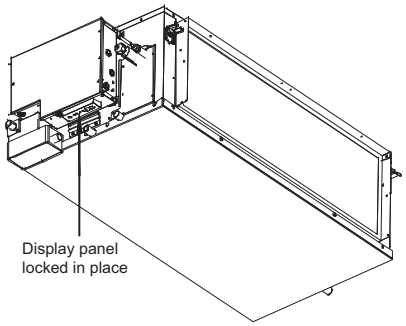

Fig. 23 —LED Display Panel Installed

Step 7 — Position and Connect Controller —

Wired controllers should be installed in a position that maintains good temperature control:

- Position the thermostat approximately 48 inches above floor level
- Do not position thermostat where it can be directly affected by the unit's discharge air-stream.
- Avoid external walls and drafts from windows and doors.
- Avoid positioning near shelves and curtains as these restrict air movement.
- Avoid heat sources such as direct sunlight, heaters, dimmer switches, and other electrical devices.
- See Fig. 24 for an example of communication wire connection.

CONTROL WIRING —

1. The communication wire must be 2-core stranded shielded cable.
2. For IDU (indoor unit) and ODU (outdoor unit) communication, use P, Q terminals. Shield drain wire should be used for ground.
3. Wiring should be done according to wiring diagram.
4. Communication wire must not form a closed loop.

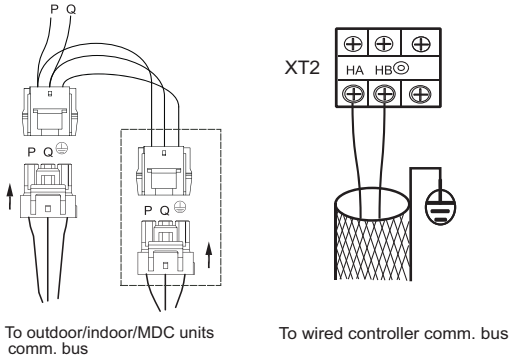

Fig. 24 —Communication Wire Connection

OPTION/EXTENSIONS OF COMMUNICATION WIRING — To extend control wiring or make terminal connections, use the PQE connection wire supplied in the accessory kit and follow these steps.

1. Cut the connector on the outdoor unit side. See Fig. 25.

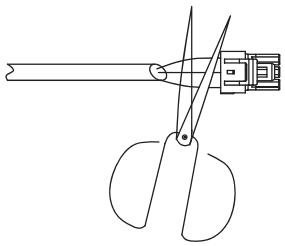

Fig. 25 —Shearing Outdoor Connector

2. Strip a suitable length of the insulation layer. See Fig. 26.

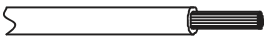

Fig. 26 —Stripping the Wire

3. Use a suitable screwdriver to fix the communication wire on the outdoor unit communication terminal as shown in Fig. 27.

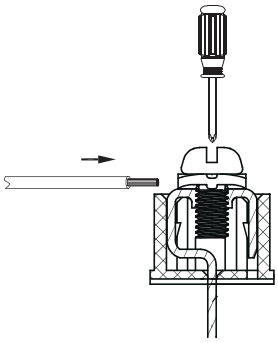

Fig. 27 —Connecting Communication Wire to Outdoor Unit Communication Terminal

If communication wires are use to connect indoor units, find the corresponding port and plug it directly. See Fig. 28.

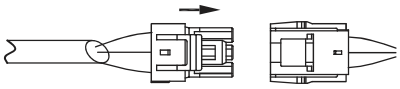

Fig. 28 —Connecting the Communication Wires

If it is not possible to buy communication wires from Carrier, connect the indoor unit side of the communication wires using the connector provided with the accessories as shown in Fig. 29. See Fig. 30 and 31 for typical communication wiring of the heat pump and heat recovery systems.

⚠ CAUTION

Failure to follow these procedures may result in personal injury or damage to equipment.

NEVER CONNECT the main power source to the control or communication terminal block.

USE AN APPROPRIATE SCREWDRIVER for tightening the terminal screws. Do not over tighten the terminal screws.

IMPORTANT: Wiring for communication shall be two inches or more apart from power source wiring to avoid electric noise. DO NOT insert control/communication and power source wire in the same conduit. Pay attention to the polarity of the communication wire.

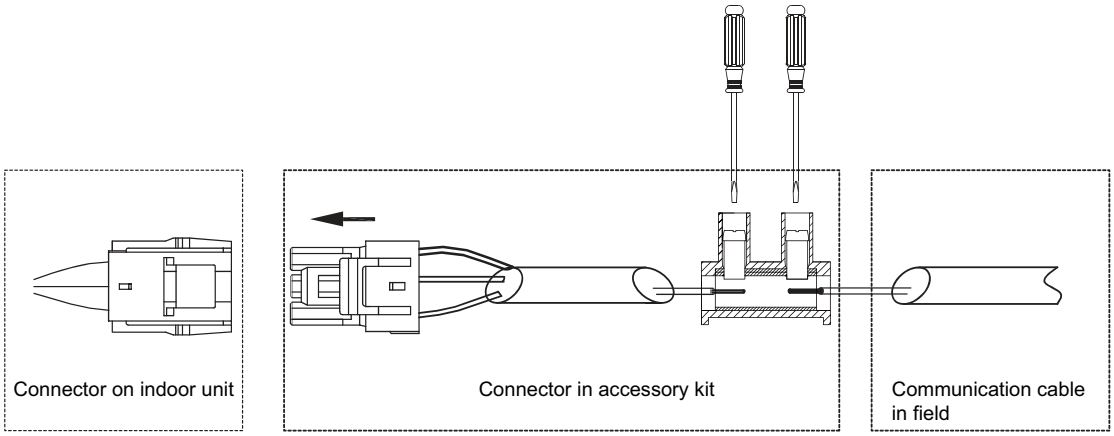

Fig. 29 —Connecting the Communication Cable to Indoor Unit Using the Supplied Connector

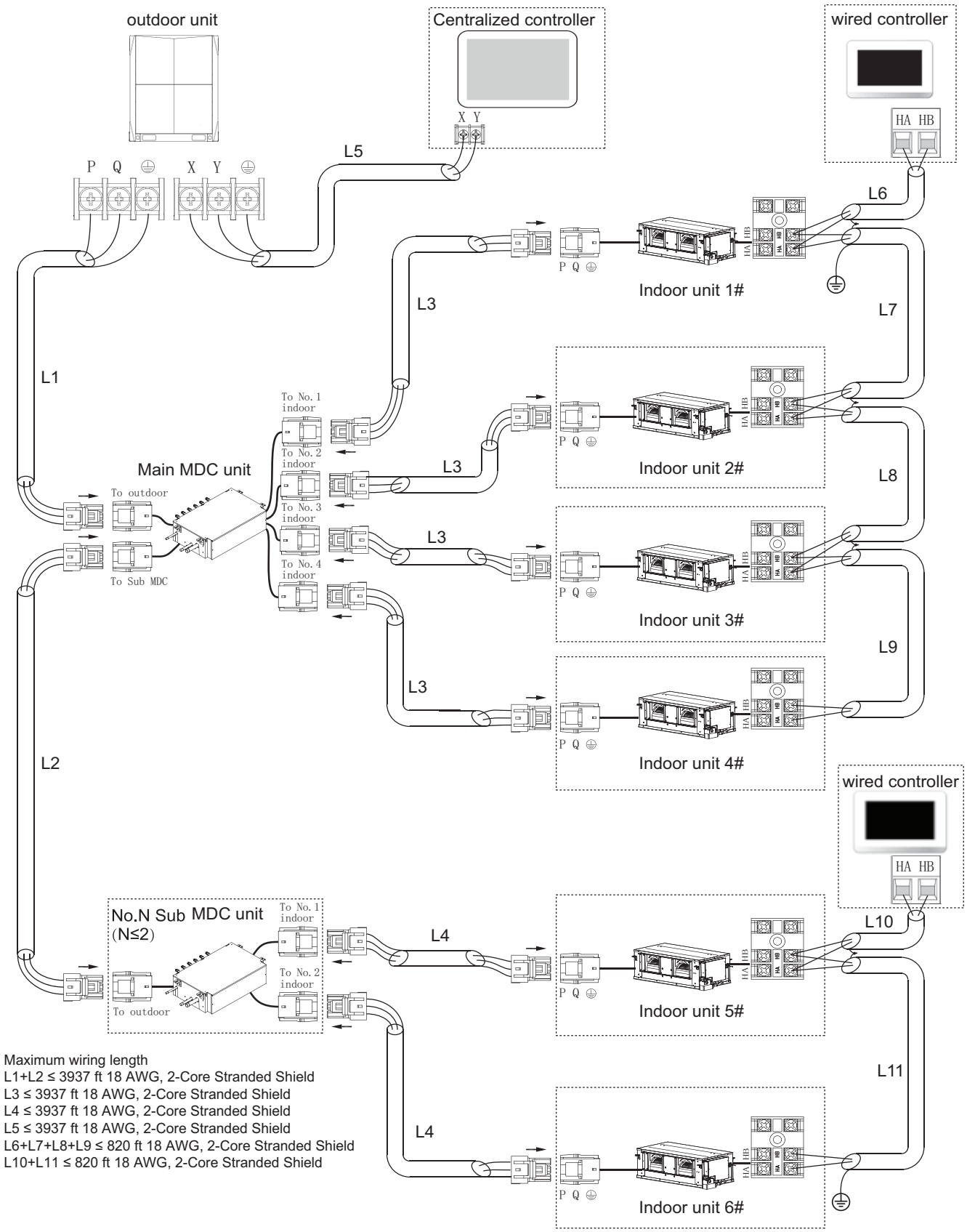

Maximum wiring length
L1+L2 ≤ 3937 ft 18 AWG, 2-Core Stranded Shield
L3 ≤ 3937 ft 18 AWG, 2-Core Stranded Shield
L4 ≤ 3937 ft 18 AWG, 2-Core Stranded Shield
L5 ≤ 3937 ft 18 AWG, 2-Core Stranded Shield
L6+L7+L8+L9 ≤ 820 ft 18 AWG, 2-Core Stranded Shield
L10+L11 ≤ 820 ft 18 AWG, 2-Core Stranded Shield

Fig. 30 —Typical Heat Recovery System Communication Wiring

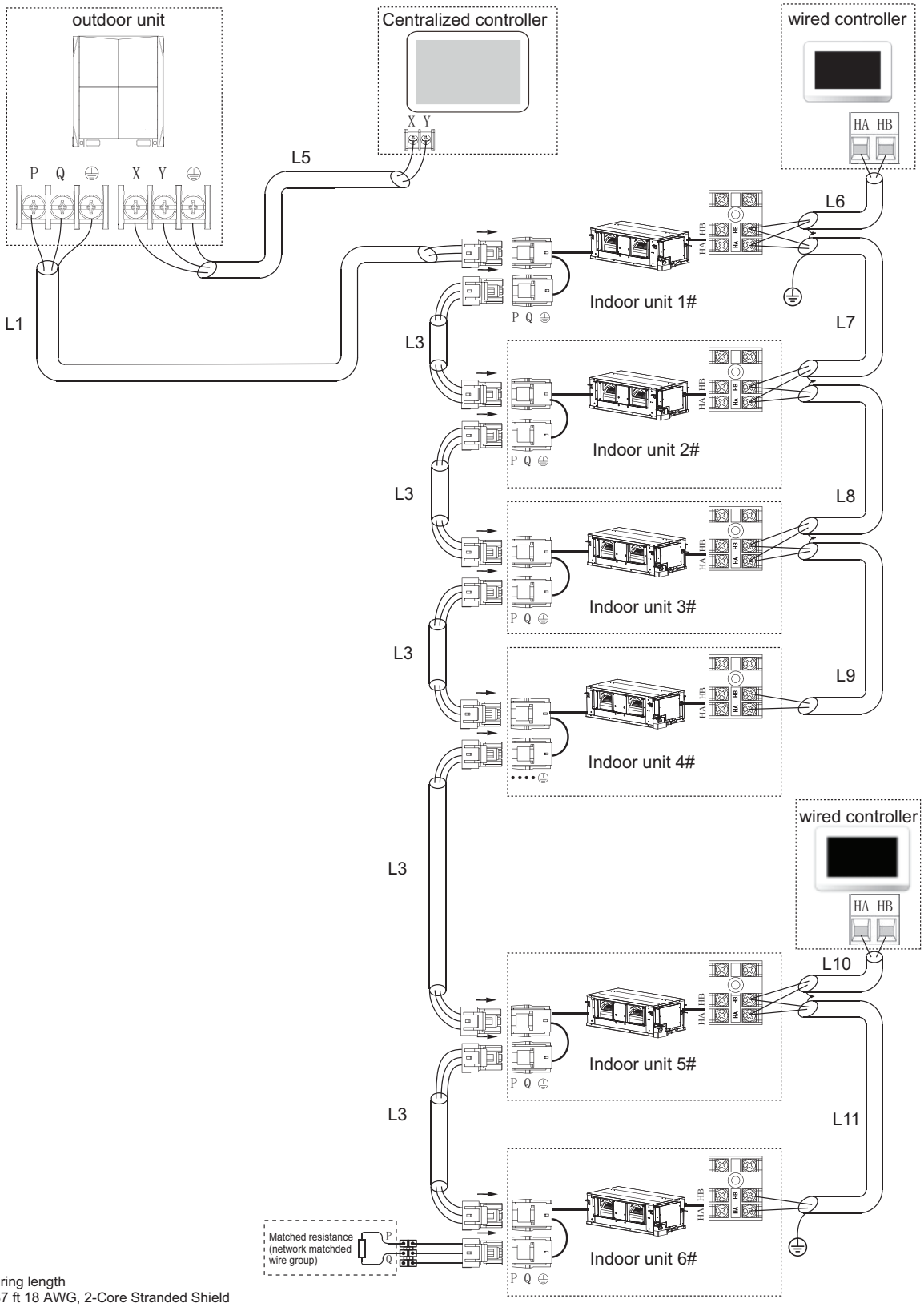

Maximum wiring length
L1+L3 ≤ 3937 ft 18 AWG, 2-Core Stranded Shield
L5 ≤ 3937 ft 18 AWG, 2-Core Stranded Shield
L6+L7+L8+L9 ≤ 820 ft 18 AWG, 2-Core Stranded Shield
L10+L11 ≤ 820 ft 18 AWG, 2-Core Stranded Shield

NOTE: Network resistor is shipped with the outdoor unit for field installation on heat pump systems.

Fig. 31 —Typical Heat Pump System Communication Wiring

IMPORTANT: The system can connect 64 indoor units with different system addresses. If two indoor units in the same system have identical addresses, abnormal operation will occur.

ACB INTERFACE

The ACB interface is a dry contact board that can output up to four signals controlling devices. Refer to Fig. 19, 20, 32 and for connecting the ACB interface board and devices.

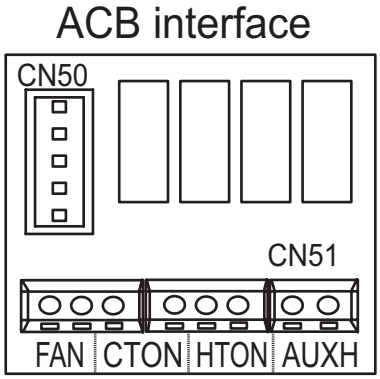

MAX AMPS - 1A
MAX VOLTAGE - 24V

LEGEND
ACB - Auxiliary Control Board
FAN - Output for Fan Operation
CTON - Output for Cooling Operation
HTON - Output for Heating Operation
AUXH - Output for Auxiliary Heat

Fig. 32 —ACB Interface

OCCUPANCY SENSOR CONNECTION (OPTIONAL AND FIELD SUPPLIED) —

1. Removed factory installed jumper on CN14.

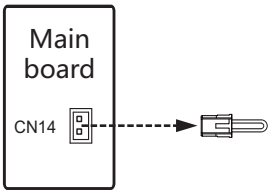

Fig. 33 —Occupancy Sensor Connection

2. Use the connection wire included in the accessory package to connect the field supplies occupancy sensor.

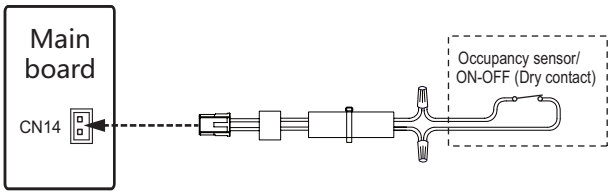

Fig. 34 —Weak Electrical Cable Group

START-UP

Pre-Start Check

Once installation is complete, perform the following pre-start checks:

1. All indoor and outdoor units are properly installed.
2. All piping and insulation is complete.
3. All electrical connections (both power and control) are properly terminated.
4. All condensate drains are installed correctly.
5. The power supply is of the right voltage and frequency.
6. The units are properly grounded in accordance with current electrical codes.
7. Suction and liquid line service valves are in open position.

System Operation Check

Follow these steps once the installation and pre-start checks are completed:

1. Using remote controller, select cooling or heating mode to check the operation of the system.
2. While the system is in operation, check the following on the indoor unit:
   a. Switches or buttons on the remote controller are easy to push.
   b. The indicator light is showing normal operation and no error is indicated.
   c. Swing mode of air louvers is working (if applicable to the unit).
   d. Drain pump operation is normal (if applicable).
   e. There is no noticeable abnormal vibration or noise.
3. While the system is in operation, check the following on outdoor unit:
   a. There is no noticeable abnormal vibration or noise.
   b. The condenser fan is in operation.
   c. The indicator light is showing normal operation and no error is indicated.

NOTE: If the unit is turned off or restarted, there is a time delay of three minutes for the compressor to start from the time power is restored.

MAINTENANCE

EVERY 3 MONTHS:

- Check the air filter condition. Clean or replace if necessary.

EVERY 6 MONTHS:

Follow 3-month maintenance schedule. In addition:

- Clean the condensate tray with suitable cleaning agent.
- Clean the grille and panel if applicable.

EVERY 12 MONTHS:

Follow the 6-month maintenance schedule. In addition:

- Ensure all the electrical connections are secure.
- Check the condensate pump operation, if applicable.
- Check the heating and cooling action to confirm proper operation.

Fan Assembly Maintenance — Refer to the following figures and instructions for removing fan assemblies as needed for repair and service.

⚠ CAUTION

When servicing or repairing this unit, use only factory approved service replacement parts. Refer to the rating plate on the unit for complete unit model number, serial number, and company address.

Any substitution of parts or controls not approved by the factory will be at the owner's risk and may result in equipment damage.

⚠ CAUTION

To avoid equipment damage, do not attempt to reuse any mechanical or electrical controllers that have been exposed to moisture. Replace the defective controller.

⚠ CAUTION

1. Shut down the unit and cut off power performing maintenance.
2. Before dismounting the fan assembly, disconnect all wires between the fan and the controller.
3. The Fan sub-assembly is very heavy so be careful while handling. Otherwise physical injury can occur.

40VMH024 - 036 —

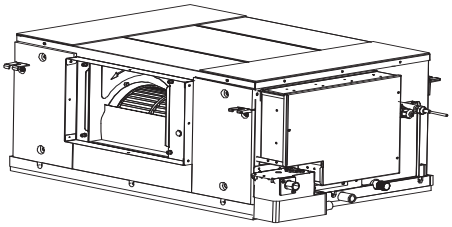

Fig. 35 —Fan Disassembly (024-036)

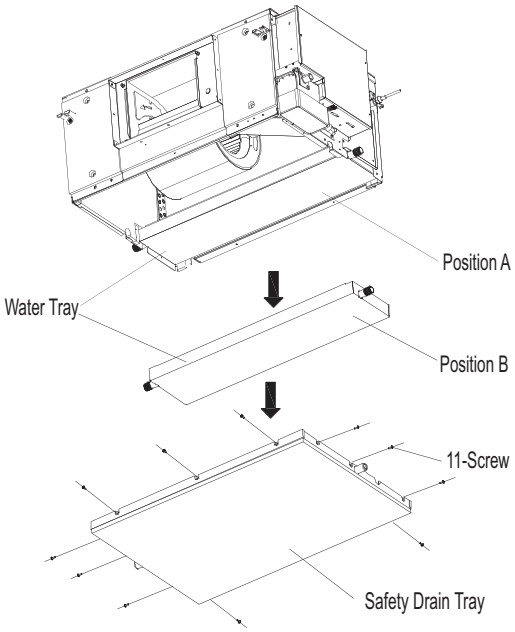

Fig. 36 —Fan Disassembly (024-036)

Fig. 35 provides an example of the unit.

1. Remove the 11 screws from the Safety Drain Tray and remove the tray along the direction of the arrows in Fig. 36.
2. Clean the tray and evaporator.
3. Use step 1 (in reverse order) to re-assemble the unit.

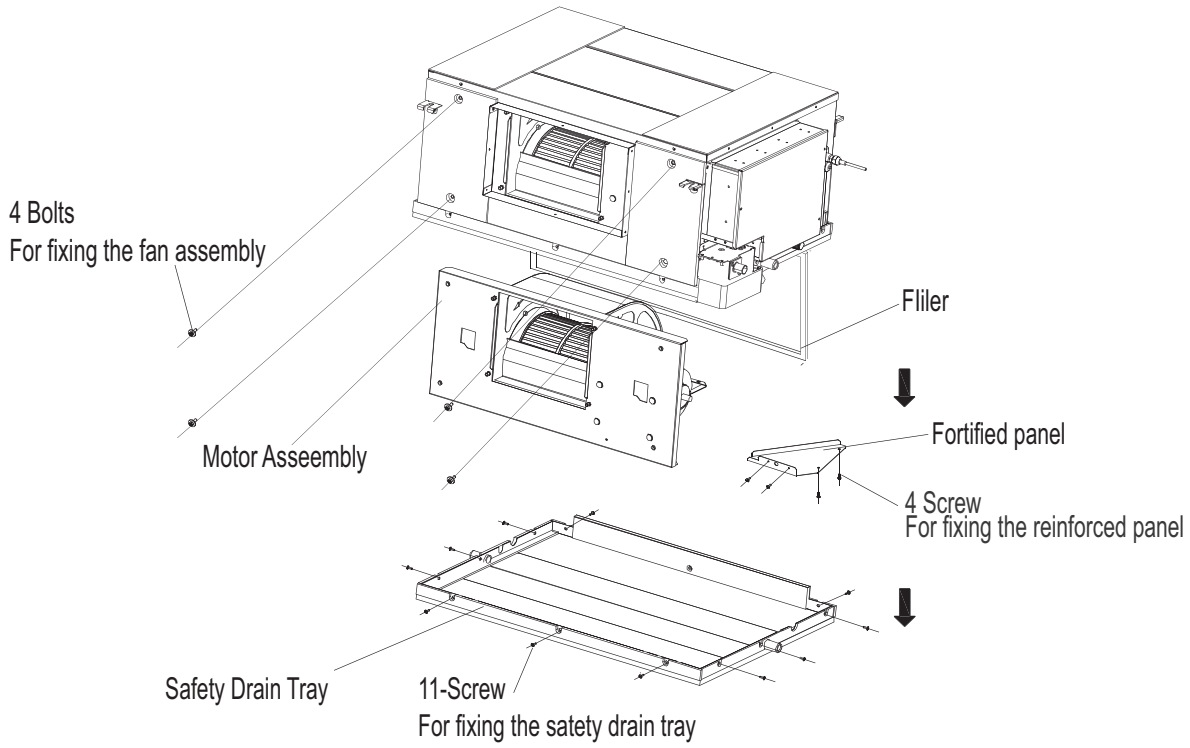

Fig. 37 —Fan Disassembly (024-036)

1. Horizontally push the fan assembly until it cannot move any further. See Fig. 37.
2. Lift up slightly and take it down to remove it.
3. After motor maintenance, reinstall the fan assemblies (apply steps in reverse order (step 2 then step 1)).
4. Connect the motor with electric control box.

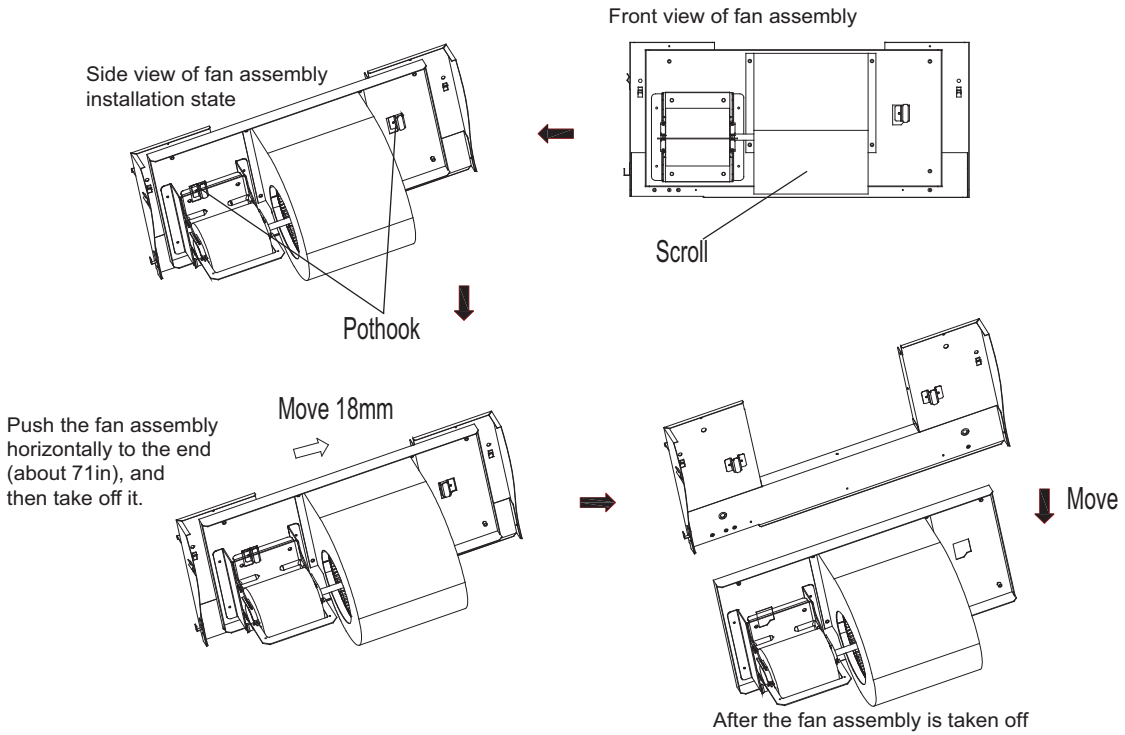

Fig. 38 —Fan Disassembly (024-036)

40VMH048 - 054 —

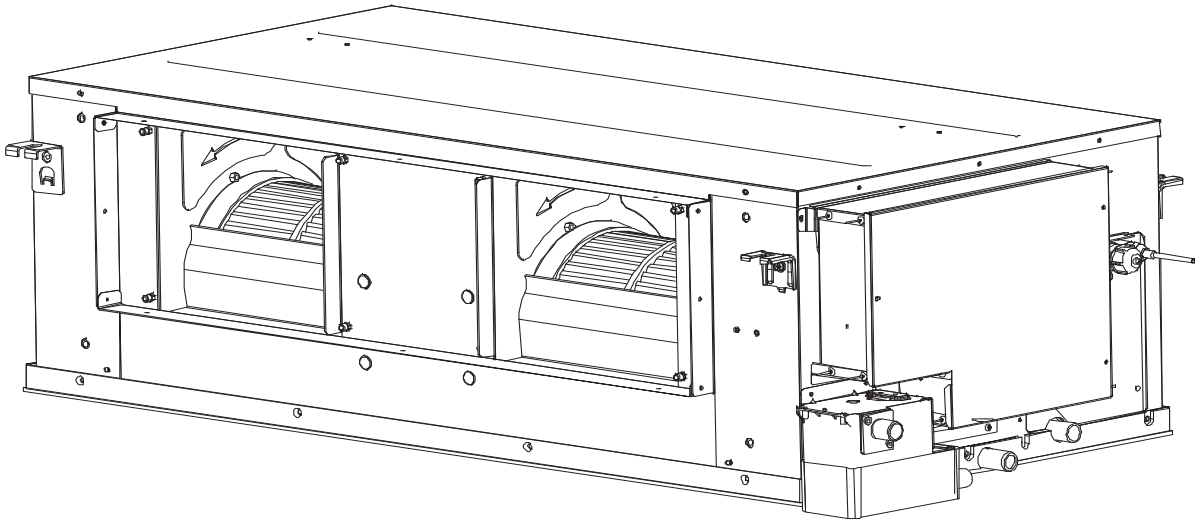

Fig. 39 —Fan Disassembly (048-054)

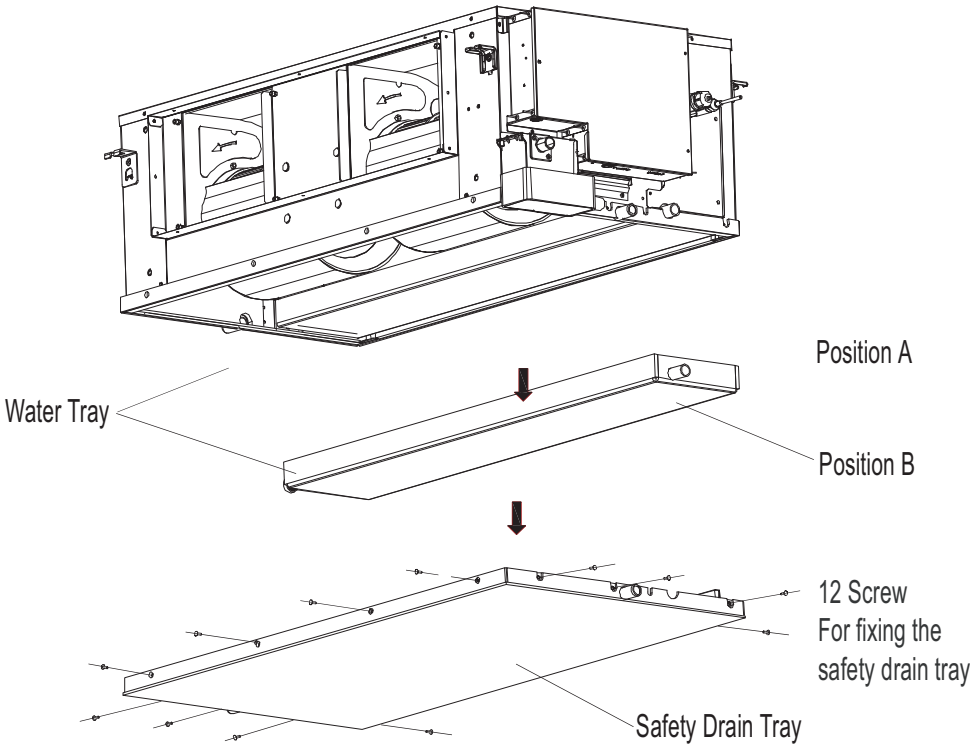

Fig. 40 —Fan Disassembly (048-054)

Fig. 39 provides an example of the unit.

1. Remove the 12 screws from the fixed Safety Drain Tray, and then take off the tray. See Fig. 40.
2. Take off the tray along the direction of the arrow. See Fig. 40.
3. Clean the tray and evaporator.
4. Re-install the unit using step 2 then step 1.

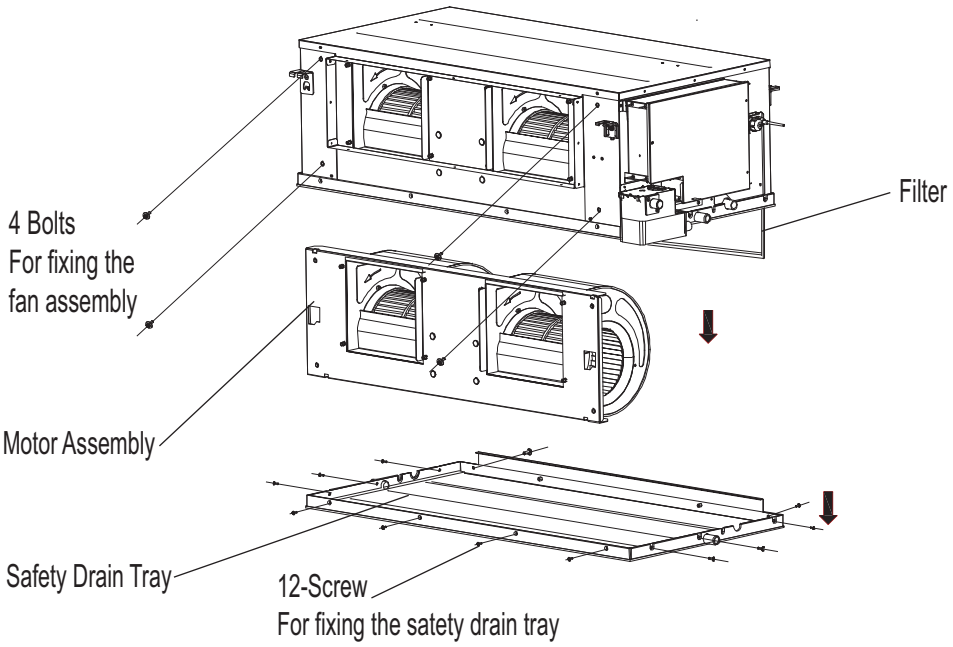

Fig. 41 —Fan Disassembly (048-054)

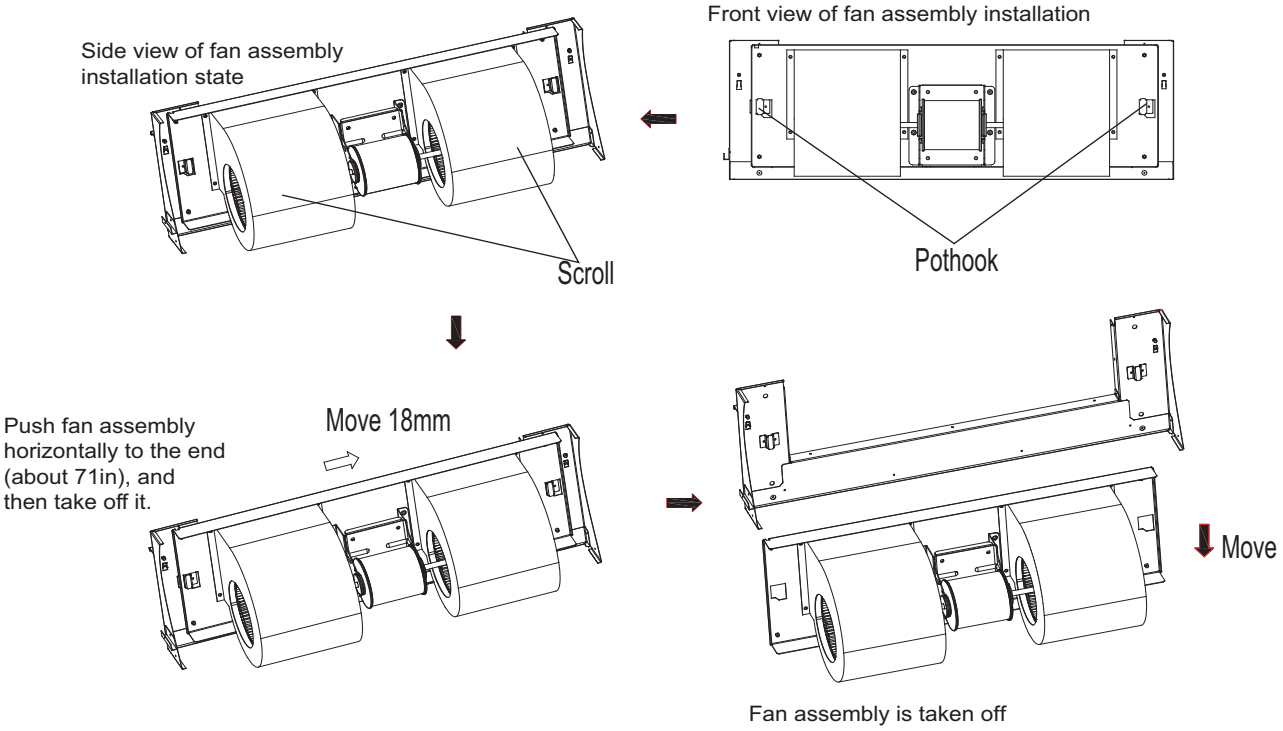

Fig. 42 —Fan Disassembly (048-054)

1. Remove all 12 screws from the Safety Drain Tray, and remove the safety drain tray. See Fig. 41.
2. Remove all 4 bolts from the fan assembly. See Fig. 42.
3. Horizontally push the fan assembly until it cannot not move any further, and lift up slightly, and take down to remove. See Fig. 42.
4. After the motor maintenance is complete, reinstall the fan assemblies, and connect the motor with electric control box.

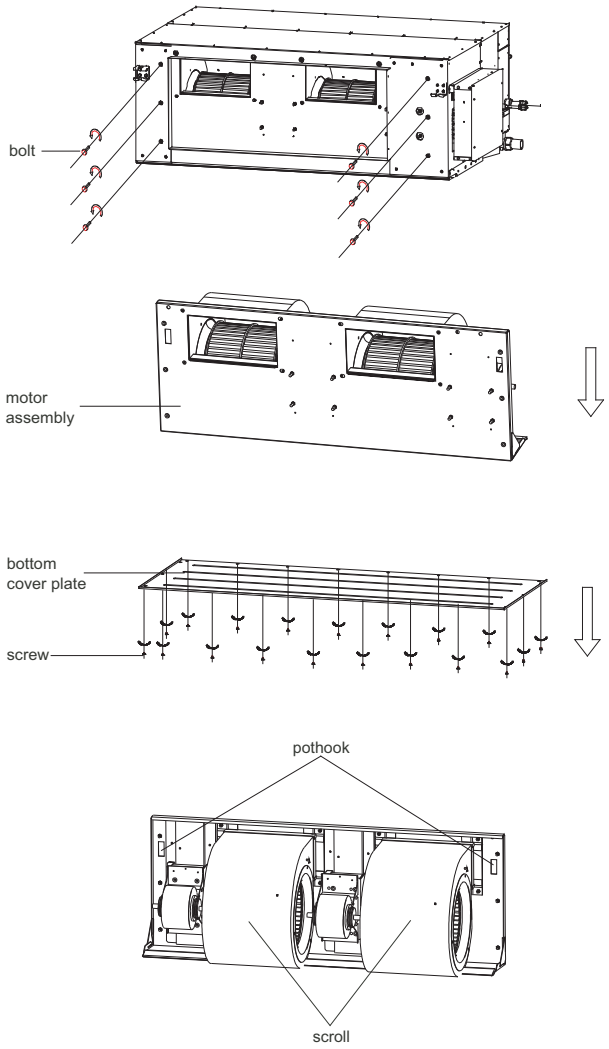

Fig. 43 —Fan disassembly (072-096)

1. Remove the bottom cover plate. See Fig. 43.
2. Remove the 6 bolts from the front plate.
3. Support the fan sub-assembly from the bottom, then lift up and remove the fan sub-assembly.
4. After motor maintenance is complete, install the motor assembly in the reverse order of steps 1, 2 and 3 (steps 3, 2, and 1).

IMPORTANT: During this process, the indoor unit does not need to be removed.

INDOOR UNIT ADDRESSING

For proper system operation, each indoor unit must have a unique address set from 0 to 63. When setting an address by remote controller, outdoor units, indoor units, and MDC must be powered on. If “FE” appears on the LED screen or display board, this unit has no address. After setting all indoor units’ addresses, turn off the power supply to all indoor units to clear errors.

Indoor units’ addressing can be distributed automatically in the heat pump system. The heat recovery system cannot accomplish this function at this time. When dip switch “S6” on, the outdoor unit’s main PCB board is set to 00 (default set in factory), indoor units are set for auto-addressing. When powering on for the first time, it takes six minutes or more to finish auto-addressing each indoor unit.

Wireless Remote Controller (40VM900001) — Indoor unit addressing can be performed using the wireless remote controller. When using the wireless controller, the user must maintain a line of sight with the receiver on the indoor unit. See Fig. 44 for a description of the buttons on the wireless remote.

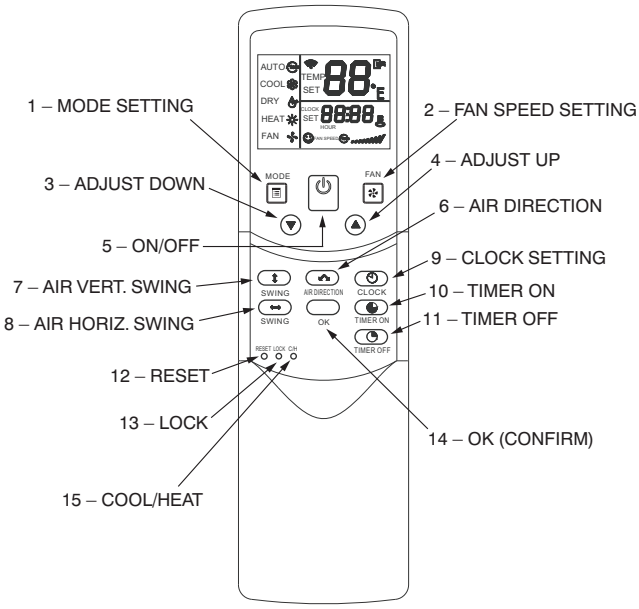

Fig. 44 —Wireless Remote Controller (40VM900001)

Use a pin or a needle (or another small, sharp tool) to press and hold **LOCK** for at least ten seconds, then press ⏻ to activate. Click ▲ or ▼ to select an address and press FAN to send the setting. To display an indoor unit address, use the same tool to press and hold **LOCK** for at least 10 seconds, and press MODE to query the address.

Non-Programmable Controller (40VM900002) — When setting an address, connect only one wired controller to an indoor unit.

Press **ROOM TEMP** and **SWING** simultaneously for three seconds. If there is no address for this indoor unit, the display shows **FE# 00**. See Fig. 45. Otherwise, the display shows the current address of the indoor unit.

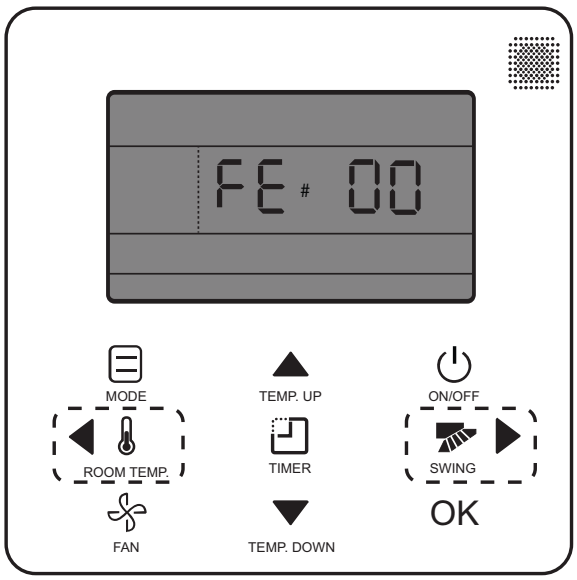

Fig. 45 —Non-Programmable Controller (40VM900002) IDU Addressing Menu

Click **TEMP. UP** or **TEMP. DOWN** to change **00** to the desired address as shown in Fig. 46. Press **OK** to confirm, and exit the setting interface.

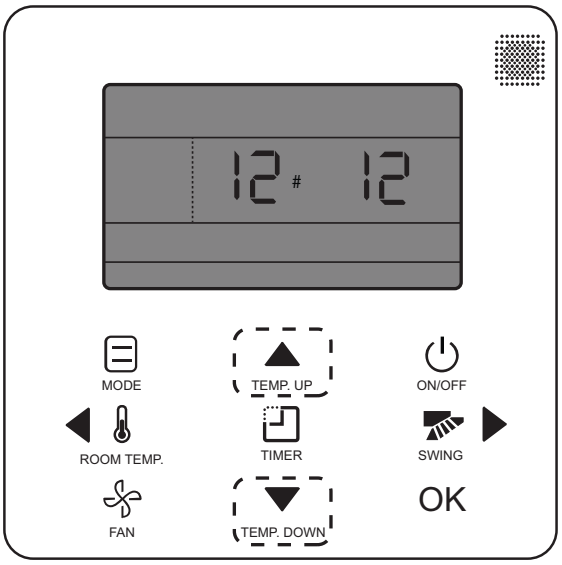

Fig. 46 —Non-Programmable Controller (40VM900002) Setting IDU Address

Programmable Controller (40VM900003) — When setting an address, connect only one wired controller to an indoor unit.

1. Press **FAN** and **BACK** simultaneously for five seconds to access the parameter settings as shown in Fig. 47.

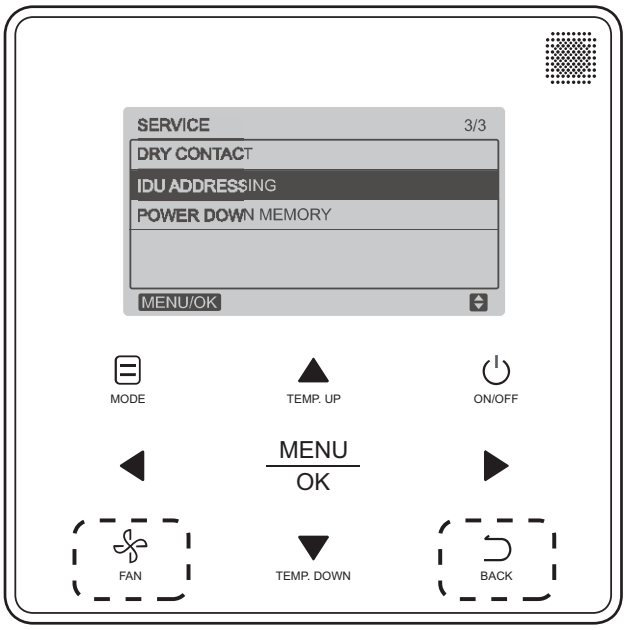

Fig. 47 —Programmable Controller (40VM900003) IDU Addressing Menu

2. Press **TEMP. UP** or **TEMP. DOWN** to move cursor, and select IDU ADDRESSING. Select **MENU/OK** to access this setting.
3. Press **TEMP. UP** or **TEMP. DOWN** to choose the address you want to set. See Fig. 48. Press **MENU/OK** to send this address to the IDU.

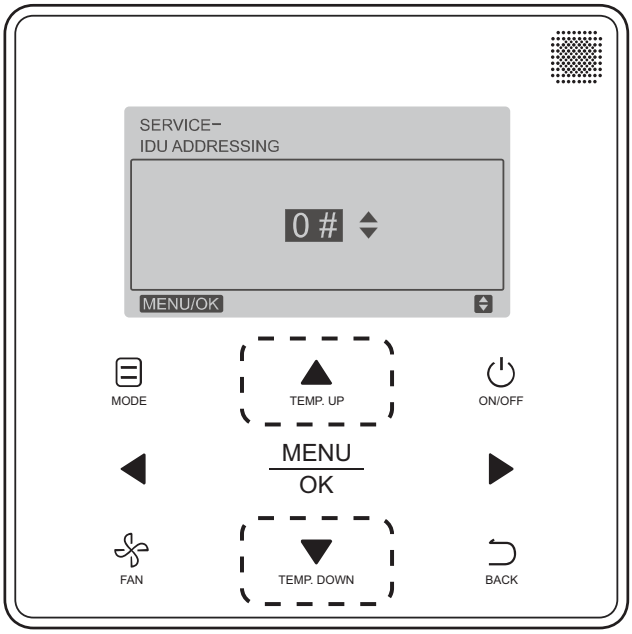

Fig. 48 —Programmable Controller (40VM900003) Setting IDU Address

4. Press **BACK** twice or wait 30 seconds to automatically exit the parameter settings menu.

TROUBLESHOOTING

Figure 49 shows the LED display panel on the indoor unit.

Table 5 provides a summary of display indicators. Table 6 lists problems, possible causes, and possible solutions.

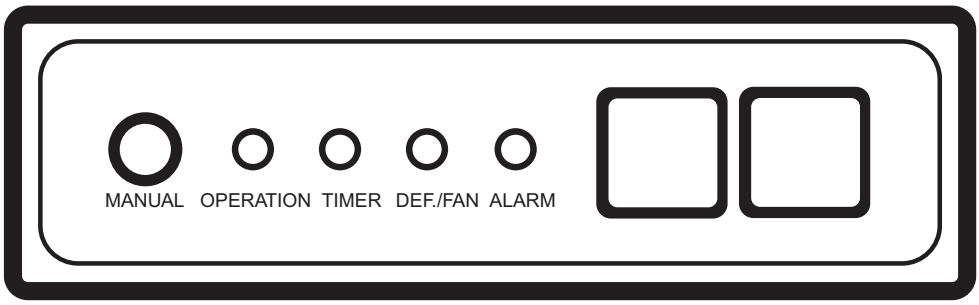

Fig. 49 —LED Display Panel

Table 5 —LED Display Indicators

ERROR CODE	LED DISPLAY	MODE/STATUS
[NO ERROR]	Operation Light ON	Starting
	None	Shutdown
	Operating Light Flashing	Standby
	Timer Light ON	Timing ON
	Timer Light OFF	Timing OFF
	Operation and Defrost/Fan Light ON	System Defrost ON
	Operation and Defrost/Fan Light OFF	System Defrost OFF
	Operation Light ON	Only FAN
dd	None	Heating/Cooling Mode Conflict
E1		Communication Error Between Indoor and Outdoor Unit
E2		Check Indoor Ambient Temperature Sensor (T1)
E4		Check Evaporator Temperature Sensor (T2B)
E5		Check Evaporator Outlet Temperature Sensor (T2A)
E6		Check DC Fan Motor
E7		EEPROM Error (Data Storage)
E9		Communication Error Between Indoor Unit and Controller
Eb		EEV Error
Ed		Outdoor Unit Error
EE		Condensate Error
FE		No Address When Power ON For First Time
UU		MDC Error In Auto System-Check Mode

LEGEND
EEPROM - Electronically Erasable Programmable Read-only Memory
EEV - Electronic Expansion Valve
MDC - Multi-port Distribution Controller

Table 6 —Troubleshooting

ERROR	DESCRIPTION	POSSIBLE CAUSES	POSSIBLE SOLUTIONS
dd	Heating / Cooling Mode Conflict	System is in cooling or fan only mode, and heating signal is received from a unit on the system	All units should be in cooling mode for system to stay in cooling mode
	System is in heating mode, and cooling signal is received from a unit in the system	System is in heating mode and cooling signal is received from a unit in the system	All units should be in heating mode
E1	Communication Error Between Indoor and Outdoor Unit	Signal wires are short-circuited or disconnected	Check or reconnect signal wire
		Signal wire close to electromagnetic source	Distance signal wires from electromagnetic source
		PC board fault	Replace PC board
E2, E4, E5	Check Temperature Sensor	Loose connection at port on PC board	Tighten the connection at port on PC board.
		Sensor is short-circuited	Using multi-meter, measure resistance of the sensor; if the resistance is ≤100 ohms, change the sensor
		PC board fault	Replace PC board
E6	DC Fan Motor	Operating beyond limits	Check and correct external static pressure on the unit
		DC motor fault	Replace DC motor
		PC board fault	Replace PC board
E7	EEPROM Error (Data Storage)	Chip or PC board fault	Replace PC board
E9	Communication Error Between Indoor Unit and Controller	Signal wires are short-circuited or disconnected	Check or reconnect signal wires
		Signal wires close to electromagnetic source	Distance signal wires from electromagnetic source
		PC board fault	Replace PC board
Eb	EEV Error	EEV wires are short-circuited or disconnected	Replace EEV wires
		EEV Stop	Replace EEV
		PC board fault	Replace PC board
Ed	Outdoor Unit Error	Outdoor unit fault	Refer to outdoor unit troubleshooting guide
EE	Condensate Error	Loose connection or disconnected	Tighten the connection or reconnect at port on PC board
		Water level float is stuck	Inspect the slope
		Trap slope is too steep	Adjust the trap slope
		Drain pipe is too long	Adjust the length of drain pipe
		Drain pump faulty	Replace the drain pump
FE	No Address When Power ON for first time	Indoor unit without address	Run automatic addressing option at the outdoor unit
			Use remote wireless or wired controller to re-address indoor unit
UU	MDC Auto System-Check Mode	MDC fault	Refer to MDC troubleshooting guide

LEGEND
EEV - Electronic Expansion Valve
EEPROM - Electronically Erasable Programmable Read-only Memory
MDC - Multiport Distribution Controller
PC - Process Controller

REPLACEMENT PARTS —

Quote the unit model number and unit serial number when ordering replacement parts or when contacting the factory about the unit. This information can be found on the serial plate attached to the unit. See Fig. 50.

CONFORMS TO UL STD 1995
CERTIFIED TO CSA STD.
C22. 2 No. 236
ELECTRIC CHARACTERISTICS
ARE ONLY FOR INDOOR UNIT.

C LISTED US
Intertek
3124627

HIGH STATIC PRESSURE DUCT TYPE AIR CONDITIONER INDOOR UNIT		
MODEL		40VMH024---3
POWER SUPPLY		208/230V-1Ph-60Hz
MINIMUM CIRCUIT AMPACITY		5.7 A
MAX FUSE OR HACR BREAKER		15 A
FAN MOTOR	FLA	4.5 A
	OUTPUT	750 W(33/32HP)
REFRIGERANT		R410A
DESIGN PRESSURE	HIGH	580 PSIG
	LOW	320 PSIG
SERIAL NO.		
Carrier Corporation		

Fig. 50 —Unit Serial Plate (Example)

APPENDIX A - DIP SWITCH SETTINGS

There are two DIP switches on the main board. Figures A and B show the settings for each parameter controlled by a switch. Switches are shown in the default settings.

POSITION 1 — START-UP

OFF — Auto Addressing Mode (Default)
ON — Factory Test Mode

POSITION 2 — MODE

OFF — Normal Mode (default)
ON — Factory Self-Checking Mode

POSITION 3 — NOT USED

POSITION 4 — INDOOR UNIT IDENTIFICATION

OFF — Standard Indoor Unit (Default)
ON — Mode Priority Indoor Unit (HP only)
(IDU address must be 63)

Fig. A — SW1 Settings

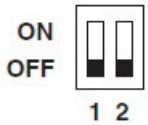

POSITION 1, 2 — Reserved

Fig. B —SW8 Settings

© Carrier Corporation 2020