Engineering Databook

Table of Contents

INDOOR AND OUTDOOR UNIT CAPACITIES 2
EXTERNAL APPEARANCE 3
SPECIFICATIONS 8
DIMENSIONS 9
CLEARANCE REQUIREMENTS 10
PIPING DIAGRAMS 11
WIRING DIAGRAMS 13
ELECTRICAL CHARACTERISTICS 15
COOLING CAPACITY 16
HEATING CAPACITY 31
OPERATING LIMITS 40
SOUND LEVELS 41
PREFACE TO SYSTEM DESIGN AND INSTALLATION... 43
UNIT PLACEMENT AND INSTALLATION 43
REFRIGERANT PIPING DESIGN 46
DRAIN PIPING 55
INSULATION 60
CHARGING REFRIGERANT 61
ELECTRICAL WIRING 63
INSTALLATION IN AREAS OF HIGH SALINITY 66
COMMISSIONING 67
APPENDIX - SYSTEM COMMISSIONING REPORT 70

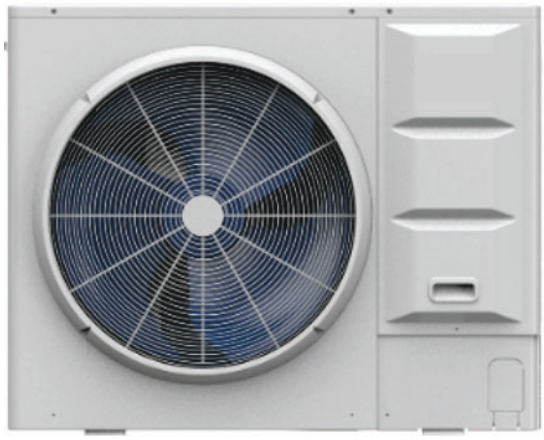

Fig. 1 —Unit Image (3 ton unit)

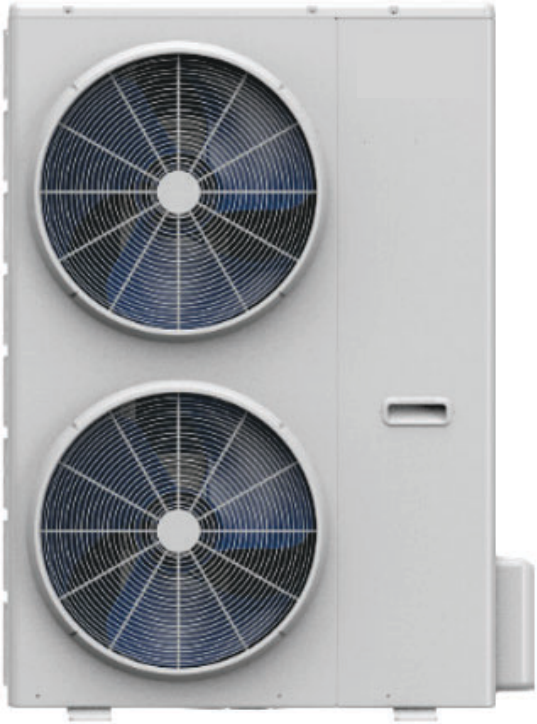

Fig. 2 —Unit Image (4k and 5k unit)

NOTE: Carrier is committed to continuously improving its products to ensure the highest quality and reliability standards, and to meet local regulations and market requirements. All features and specifications are subject to change without prior notice.

INDOOR AND OUTDOOR UNIT CAPACITIES

INDOOR UNITS

Table 1 — Indoor unit abbreviation codes

Abbreviation Code	Type
Q4C	Compact Four-way Cassette
Q4	Four-way Cassette
T3	Low Static Pressure Duct
T2	Medium Static Pressure Duct
G	Wall-mounted
V	AHU

Table 2 — Indoor unit capacity range

Capacity			Capacity index	Q4C	Q4	T3	T2	V	G
kW	kBtu/h	HP							
1.5	5	0.5	15	—	—	05	—	—	05
2.2	7	0.8	22	07	—	07	07	—	07
2.8	9	1	28	09	09	09	09	—	09
3.6	12	1.25	36	12	12	12	12	12	12
4.5	15	1.6	45	15	15	15	15	—	15
5.6	18	2	56	—	18	18	18	18	18
7.1	24	2.5	71	—	24	24	24	24	24
8.0	27	3	80	—				—	27
9.0	30	3.2	90	—	30	30	30	30	—
11.2	36	4	112	—	36	36	36	—	—
14.0	48	5	140	—	48	—	48	—	—

OUTDOOR UNITS

Table 3 — Outdoor unit capacity range

Capacity (kBtu/h)	Model Name
36.0	37VMH036HDS3-1
48.0	37VMH048HDS3-1
60.0	37VMH060HDS3-1

NOTE: Mini Series outdoor units could not be combined.

EXTERNAL APPEARANCE

INDOOR UNITS

Table 4 — Indoor unit appearance

Compact Four-Way	Four-Way Cassette
Low Static Pressure Duct	Medium Static Pressure Duct 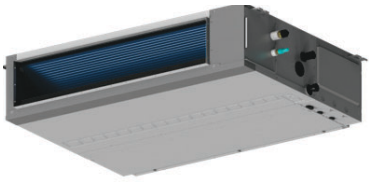
AHU	Wall-Mouinted

OUTDOOR UNITS

Table 5 — Outdoor unit appearance

37VMB036HDS3-1	37VMB048HDS3-1 37VMB060HDS3-1
	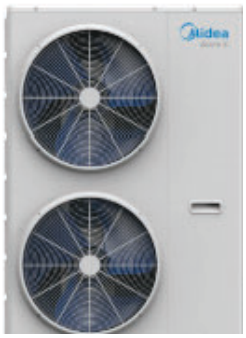

NOMENCLATURE

45 VM F 007 A - - 3

Equipment Type
45 — Indoor Fan Coil Unit

Product Type
VM — Carrier VRF

Model Number Modifier
A — Outside Air
C — Compact 4-Way Cassette
D — Multiport Distribution Controller
F — 4-Way Cassette
H — High Static Duct
I — 1-Way Cassette
L — Low Static Duct
M — Medium Static Duct
R — Floor Console Recessed
U — Underceiling / Floor
V — Vertical AHU
W — High Wall
Z — Reheat Unit

Electrical
3 — 208/230-1-60

Not Defined
- — Blank

Not Defined
- — Blank

Not Defined
A — Design Revision

Cooling Capacity (Btuh)
005 — 5,000
007 — 7,000
009 — 9,000
012 — 12,000
015 — 15,000
018 — 18,000
024 — 24,000
030 — 30,000
036 — 36,000
048 — 48,000
054 — 54,000
072 — 72,000
096 — 96,000

Fig. 3 —Indoor Units

37 VM B 036 H D S 3 - 1

Equipment Type
37 — Outdoor Unit

Product Type
VM — VRF

Model Number Modifier
A — Revision Number
B — Revision Number

Capacity (Btuh)
036 — 36,000
048 — 48,000
060 — 60,000

System Type
H — Heat Pump

Packaging
1 — USA & Canada

Blank

Voltage (V-Ph-Hz)
3 — 208/230-1-60

Cabinet Type
S — Standard

Variations
D — Domestic

Fig. 4 —Outdoor Units

Manufacturer reserves the right to change, at any time, specifications and designs without notice and without obligations.

COMBINATION RATIO

$$\text{Combination ratio} = \frac{\text{Total capacity of IDU}}{\text{Total capacity of ODU}}$$

Table 6 — Indoor and outdoor unit combination ratio limitations

Units (kBtu/h)	Minimum combination ratio	Maximum combination ratio
30/48/60	50%	130%

Table 7 — Combinations of Indoor and outdoor units

Outdoor unit capacity		Sum of capacity indexes of connected VRF indoor units	Maximum number of connected VRF indoor units
Ton	Capacity index		
3.0	30	61.5 to 196.8	5
4.0	48	77.5 to 248	7
5.0	60	87.5 to 280	9

Manufacturer reserves the right to change, at any time, specifications and designs without notice and without obligations.

SELECTION PROCEDURE

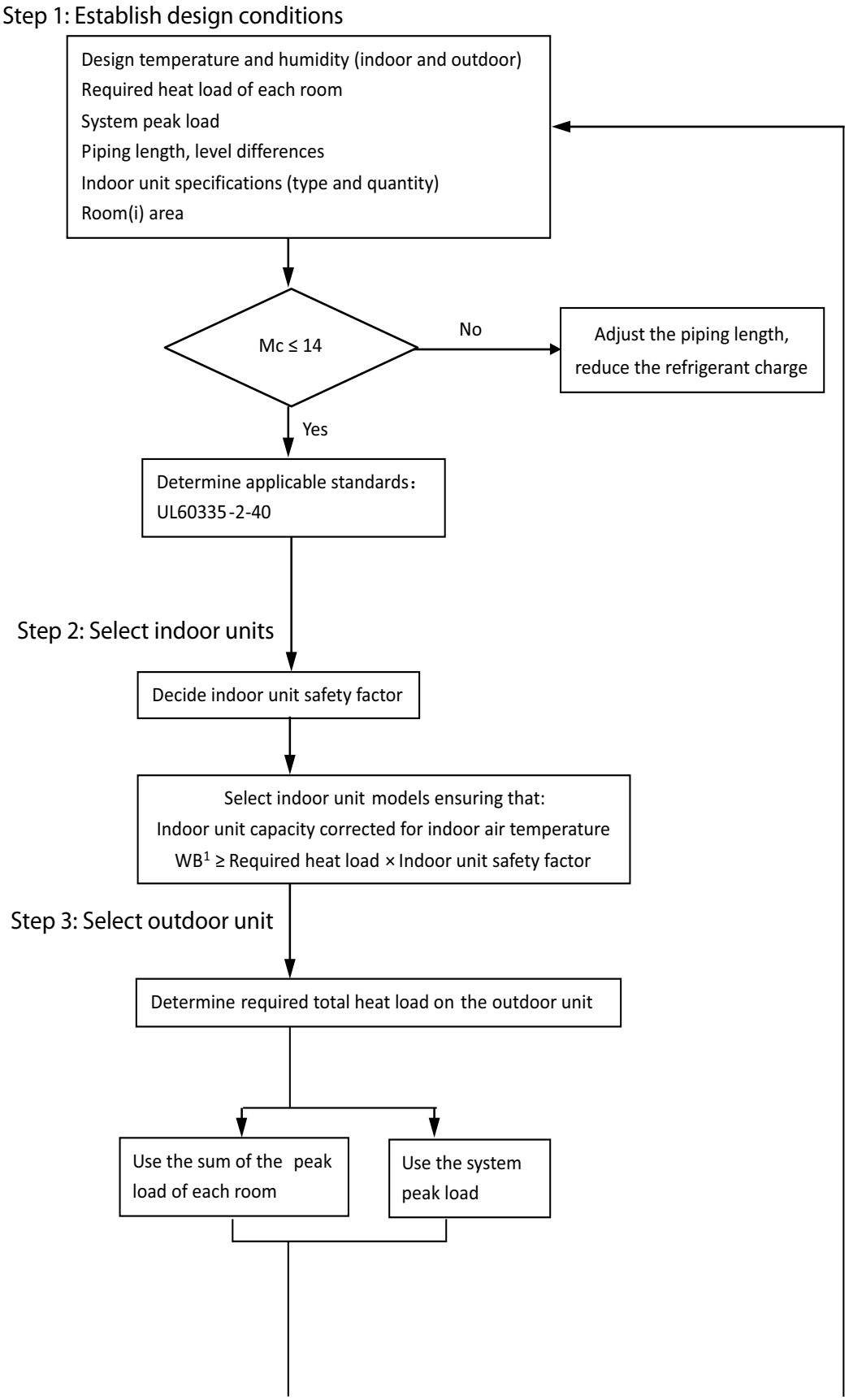

Fig. 5 —Selection Procedure

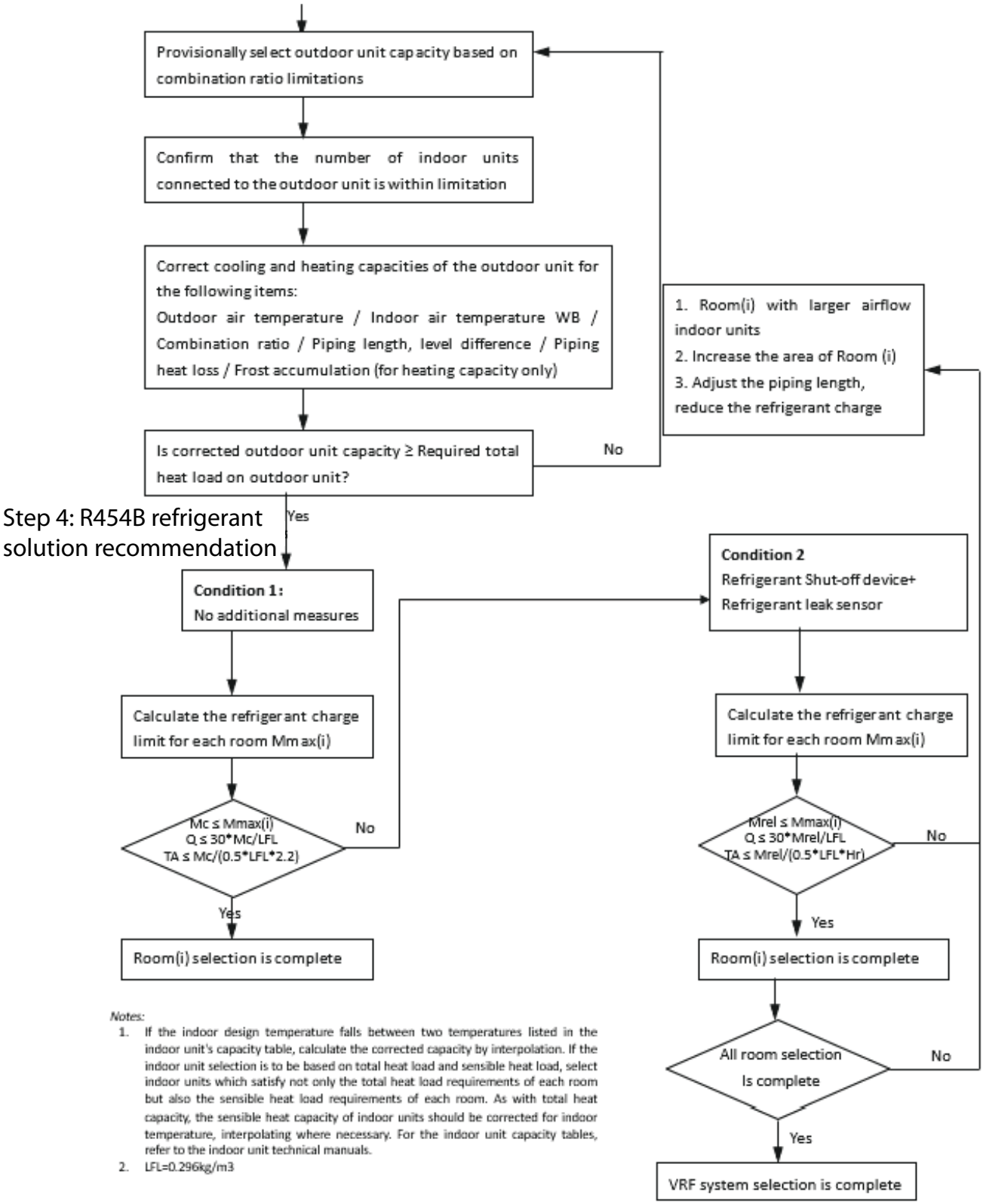

Notes:

1. If the indoor design temperature falls between two temperatures listed in the indoor unit's capacity table, calculate the corrected capacity by interpolation. If the indoor unit selection is to be based on total heat load and sensible heat load, select indoor units which satisfy not only the total heat load requirements of each room but also the sensible heat load requirements of each room. As with total heat capacity, the sensible heat capacity of indoor units should be corrected for indoor temperature, interpolating where necessary. For the indoor unit capacity tables, refer to the indoor unit technical manuals.
2. LFL=0.296kg/m3

Fig. 6 —Selection Procedure (Cont.)

SPECIFICATIONS

Table 8 — Specifications - All Sizes

Sale Model			3Ton	4Ton	5Ton
			37VMH036HDS3	37VMH048HDS3	37VMH060HDS3
Power supply			208/230V-60Hz		
Cooling Capacity[1]	With Unitary Ducted Indoor[4]	Btu/h	34000	48000	52000
	With VRF Ductless Indoor[5]	Btu/h	36000	48000	60000
EER2[1]	With Unitary Ducted Indoor[4]	Btu/W	11.70	10.3	10
	With VRF Ductless Indoor[5]	Btu/W	13.3	11.7	9.5
SEER2[1]	With Unitary Ducted Indoor[4]	Btu/W	17.2	17.0	16.0
	With VRF Ductless Indoor[5]	Btu/W	20	20	19.5
Heating Capacity[2]	With Unitary Ducted Indoor[4]	Btu/h	36000	48000	54000
	With VRF Ductless Indoor[5]	Btu/h	40000	50000	60000
COP2[2]	With Unitary Ducted Indoor[4]	W/W	3.60	3.56	3.50
	With VRF Ductless Indoor[5]	W/W	4.1	3.9	3.9
HSPF IV[2]	With Unitary Ducted Indoor[4]	Btu/W	9.40	9.40	9.30
	With VRF Ductless Indoor[5]	Btu/W	10.1	10.1	10.1
HSPF V[2]	With Unitary Ducted Indoor[4]	Btu/W	7.70	7.30	7.20
	With VRF Ductless Indoor[5]	Btu/W	7.5	7.0	6.6
Heating Capacity[3]	With Unitary Ducted Indoor[4]	Btu/h	36000	41000	45000
	With VRF Ductless Indoor[5]	Btu/h	34000	40000	42000
COP[3]	With Unitary Ducted Indoor[4]	W/W	1.90	1.95	1.95
	With VRF Ductless Indoor[5]	W/W	2.0	2.0	1.9
Connected indoor unit	Total capacity		50%~130% of ODU capacity		
	Maximum quantity		5	7	9
Compressor	Type		DC inverter		
	Quantity		1		
	Oil type		VG75R		
Fan	Motor type		DC		
	Quantity		1	2	
	Motor output	W	200	100+100	100+100
Refrigerant	Type		R454B		
	Charge Amount	lbs (oz)	6.83 (109.3)	9 (144.6)	9 (144.6)
Pipe connections[3]	Gas pipe	in. (I.D.)	5/8	3/4	3/4
	Liquid pipe	in. (I.D.)	3/8	3/8	3/8
Sound Data		dB(A)	59	60	60
Outdoor Unit	Dimension(W x H x D)	in.	40-11/16×34×20-9/16	38-1/2×52-1/4×15-3/4	
	Packing (W x H x D)	in.	44-1/16 × 38-9/16 × 22-1/16	42-5/8 × 56-1/2 × 17-1/8	
	Net/Gross weight	lbs	207/229	227/249	227/249
Ambient temp. operation range	Cooling (DB)	?	5~125		
	Heating (WB)	?	-22~86		

NOTES:

1. 95°F dry bulb/75°F wet bulb outdoor air temperature and 80°F dry bulb/67°F wet bulb entering indoor coil air;
2. 47°F dry bulb/43°F wet bulb outdoor air temperature and 70°F dry bulb/60°F wet bulb entering indoor coil air;
3. 5°F dry bulb/3°F wet bulb outdoor air temperature and 70°F dry bulb/60°F wet bulb entering indoor coil air;
4. When matched with ducted multi-position air handler unit;
5. When matched with ductless indoor unit;
6. The above data may be changed without notice for future improvement on quality and performance.

DIMENSIONS

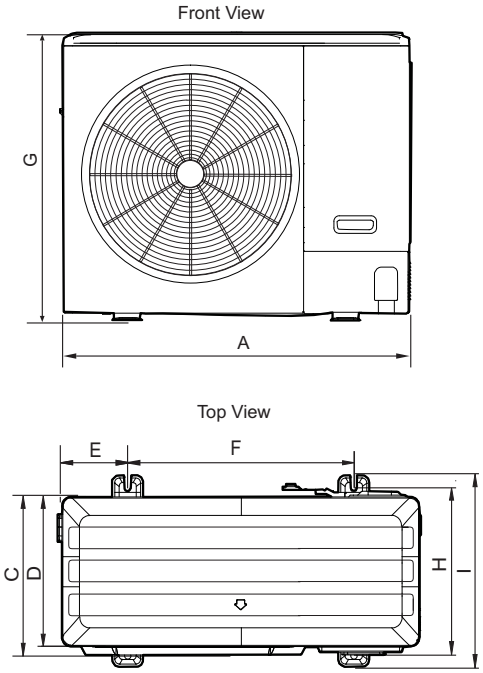

Fig. 7 —3.0 ton unit

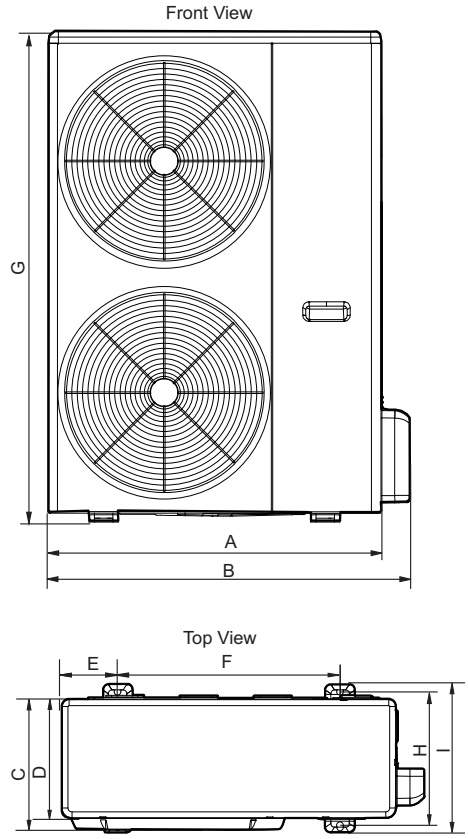

Fig. 8 —4.0 / 5.0 ton unit

Table 9 — Dimensions

Model (Ton)	A	B	C	D	E	F	G	H	I
3.0	40-11/16	/	17-1/16	16-1/8	7-1/2	25-13/16	34	18	20-9/16
4.0/5.0	35-5/8	38-1/2	13-7/8	12-11/16	5-15/16	23-5/8	52-1/4	14-3/16	15-3/4

Manufacturer reserves the right to change, at any time, specifications and designs without notice and without obligations.

CLEARANCE REQUIREMENTS

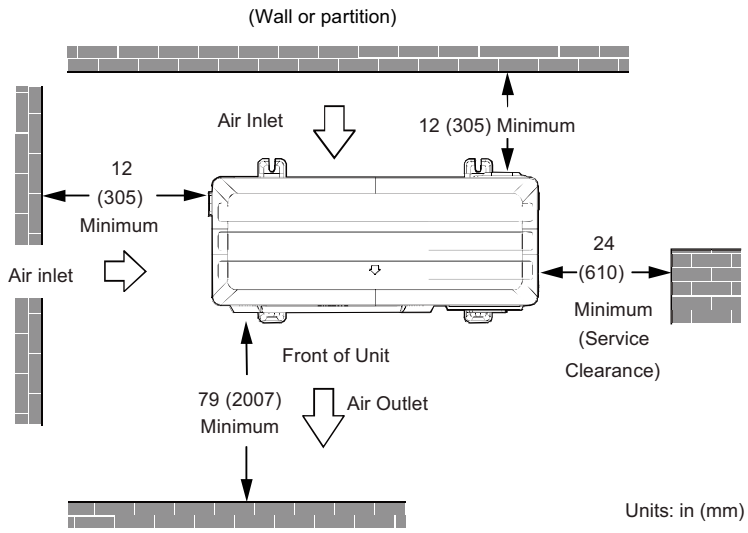

Fig. 9 —Single Unit Installation

NOTE: If unit is surrounded on three or four sides by walls or partitions that are taller than 10ft (3m), call your dealer to discuss additional requirements.

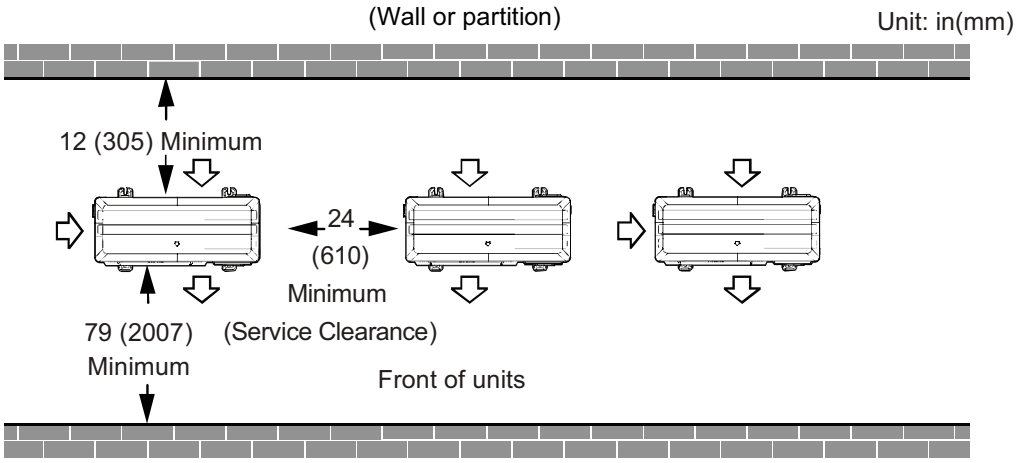

Fig. 10 —Multiple Unit Installation (Top View)

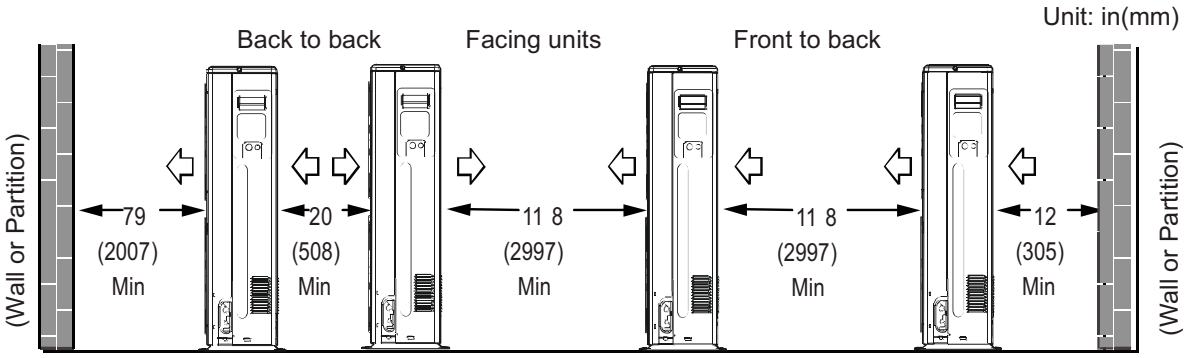

Fig. 11 —Multiple Unit Installation (Side View)

PIPING DIAGRAMS

3.0 TON PIPING DIAGRAM

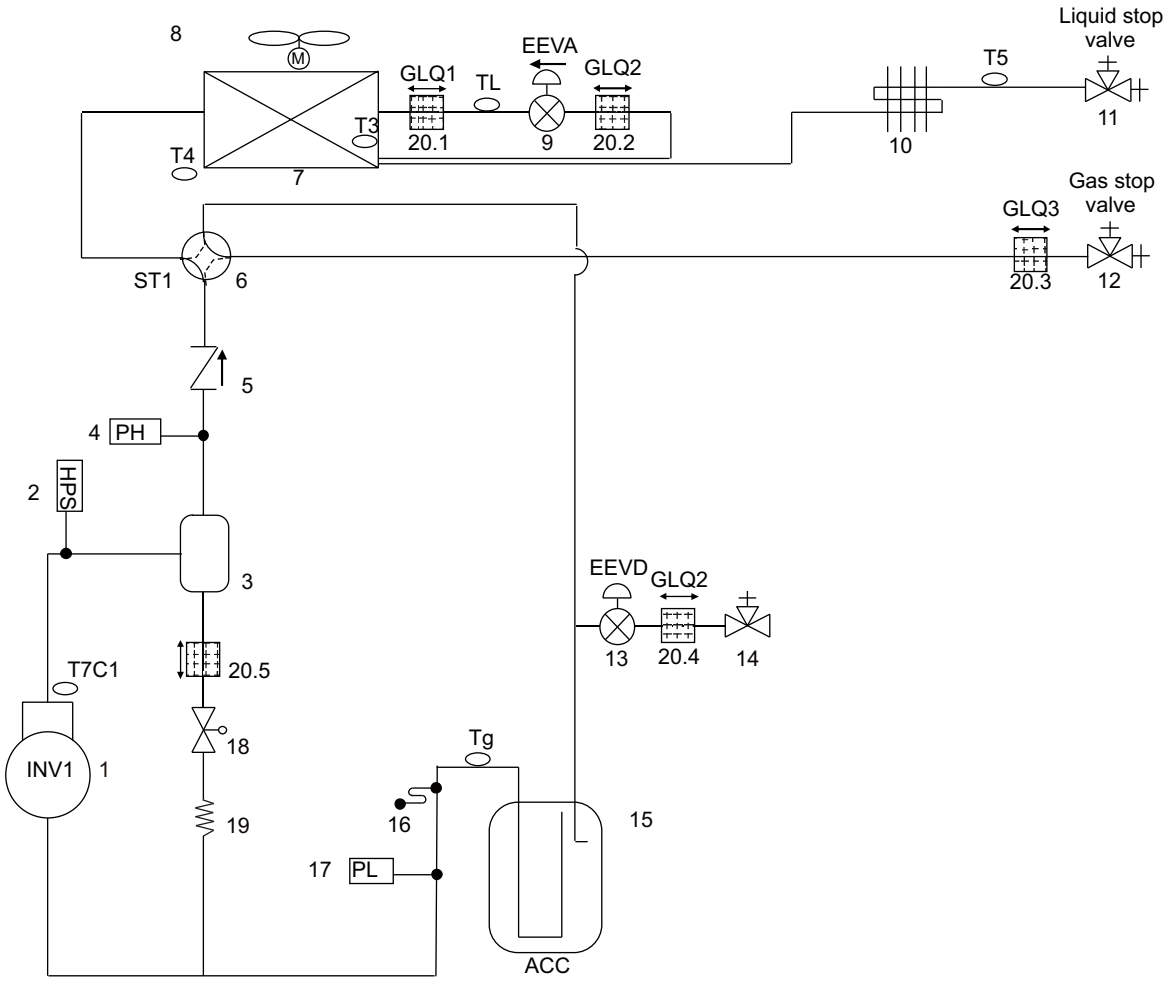

Fig. 12 —3.0 ton piping diagram

Table 10 — Legend

No.	Parts name		No.	Parts name
1	Compressor		15	Gas-liquid separator
2	High pressure switch		16	Fusible plug
3	Oil separator		17	Low pressure sensor
4	High pressure sensor		18	Solenoid valve
5	Check valve		19	Capillary tube
6	Four-way valve		20	Filter
7	Heat exchanger		**Sensor Code**	**Description**
8	Fan		T3	Heat exchanger deicer temperature sensor
9	Electronic expansion valve (EEVA)		T4	Outdoor air temperature sensor
10	Radiator		T5	Liquid pipe temperature sensor
11	Stop valve (liquid side)		T7C1	Discharge temperature sensor
12	Stop valve (gas side)		Tg	Gas pipe temperature sensor
13	Electronic expansion valve (EEVD)		TL	Heat exchanger liquid temperature sensor
14	Services valve			

Manufacturer reserves the right to change, at any time, specifications and designs without notice and without obligations.

4.0/5.0 TON PIPING DIAGRAM

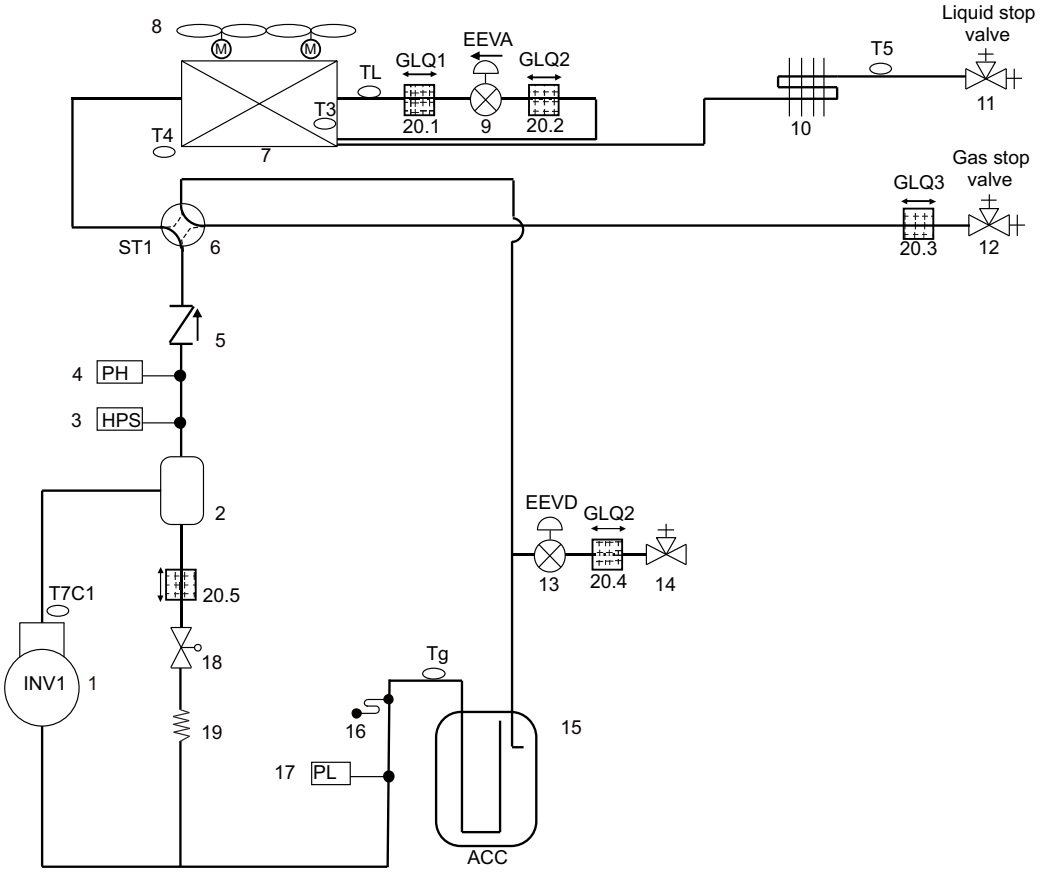

Fig. 13 —4.0/5.0 ton piping diagram

Table 11 — Legend

No.	Parts name	No.	Parts name
1	Compressor	15	Gas-liquid separator
2	Oil separator	16	Fusible plug
3	High pressure switch	17	Low pressure sensor
4	High pressure sensor	18	Solenoid valve
5	Check valve	19	Capillary tube
6	Four-way valve	20.1-20.5	Filter
7	High pressure sensor	**Sensor Code**	**Description**
8	Fan	T3	Heat exchanger deicer temperature sensor
9	Electronic expansion valve (EEVA)	T4	Outdoor air temperature sensor
10	Radiator	T5	Liquid pipe temperature sensor
11	Stop valve (gas side)	T7C1	Discharge temperature sensor
12	Stop valve (liquid side)	Tg	Gas pipe temperature sensor
13	Electronic expansion valve (EEVD)	TL	Heat exchanger liquid temperature sensor
14	Services valve		

Key components

1. **Oil separator:**
   Separates oil from gas refrigerant pumped out of the compressor and quickly returns it to the compressor. Separation efficiency is up to 99%.
2. **Gas-liquid separator:**
   Separates liquid refrigerant from gas refrigerant, stores liquid refrigerant and oil to protect compressor from liquid hammering.
3. **Electronic expansion valve:**
   Controls refrigerant flow and reduces refrigerant pressure.
4. **Four-way valve:**
   Controls heat exchanger function. When open, the heat exchanger functions as an evaporator; When closed, the heat exchanger functions as a condenser. Refer to part 3, “Heat Exchanger Control”.
5. **High pressure switch:**
   Regulate system pressure. When system pressure rises above the upper limit, the high pressure switch turn off, stopping the compressor. When the high pressure protection recovers, the compressor restarts.
6. **High/Low pressure sensor**
   Used to detect the system high/low pressure.

WIRING DIAGRAMS

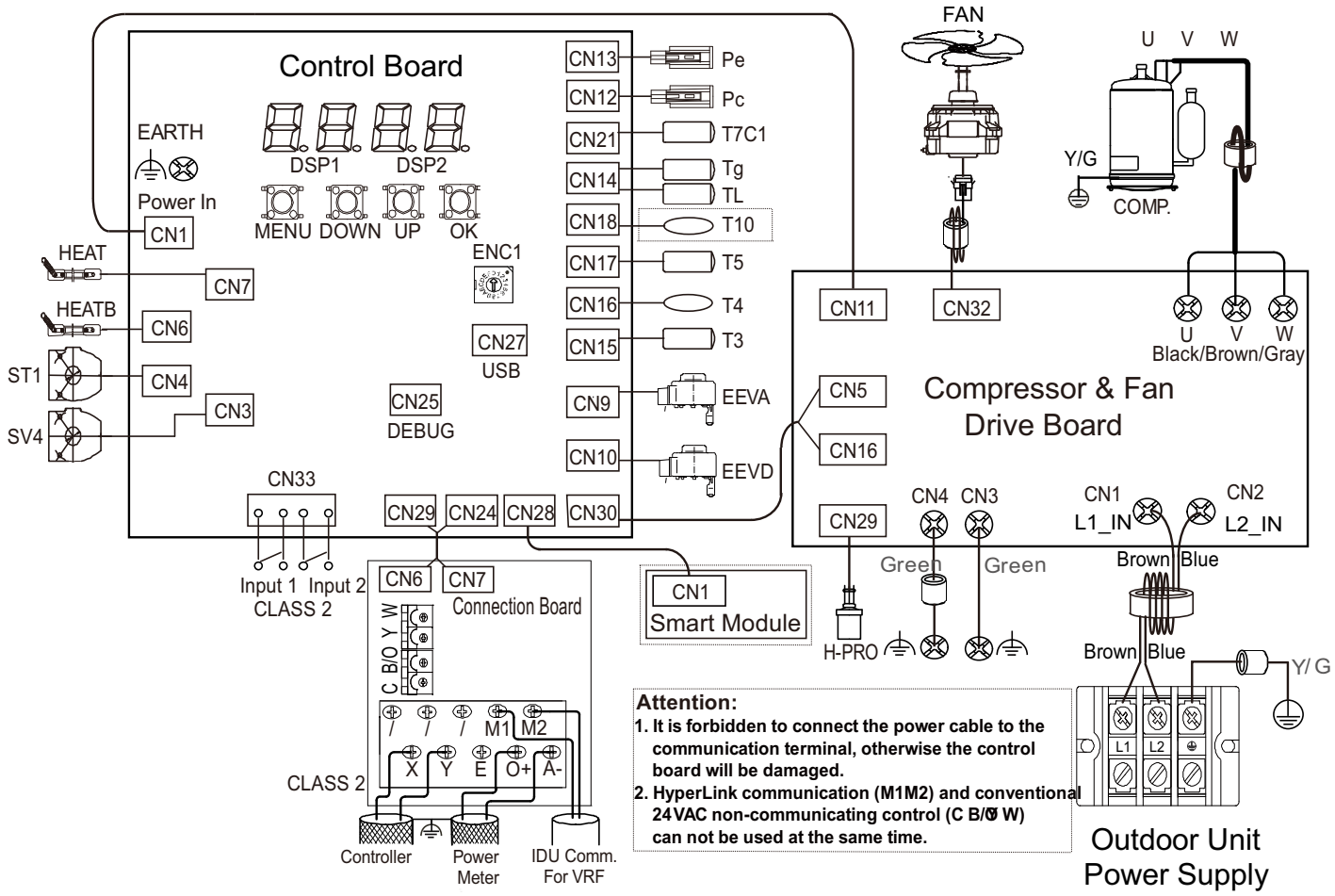

Fig. 14 — 3.0 Ton Wiring Diagram

Table 12 — Legend

Code	Name		Code	Name
COMP	Compressor		Pe	Low pressure sensor
EEVA/D	Electronic expansion valve		T3	Heat exchanger temperature sensor
FAN	DC Fan		T4	Outdoor ambient temperature sensor
HEAT	Crankcase heater		T5	Liquid pipe temperature sensor
HEATB	Pan heater		Tg	Suction temperature sensor
H-PRO	High pressure switch		T10	Additional ambient temperature sensor (optional)
ST1	Four-way valve		T7C1	Compressor discharge temperature sensor
SV4	Solenoid valve		TL	Heat exchanger liquid temperature sensor
Pc	High pressure sensor			

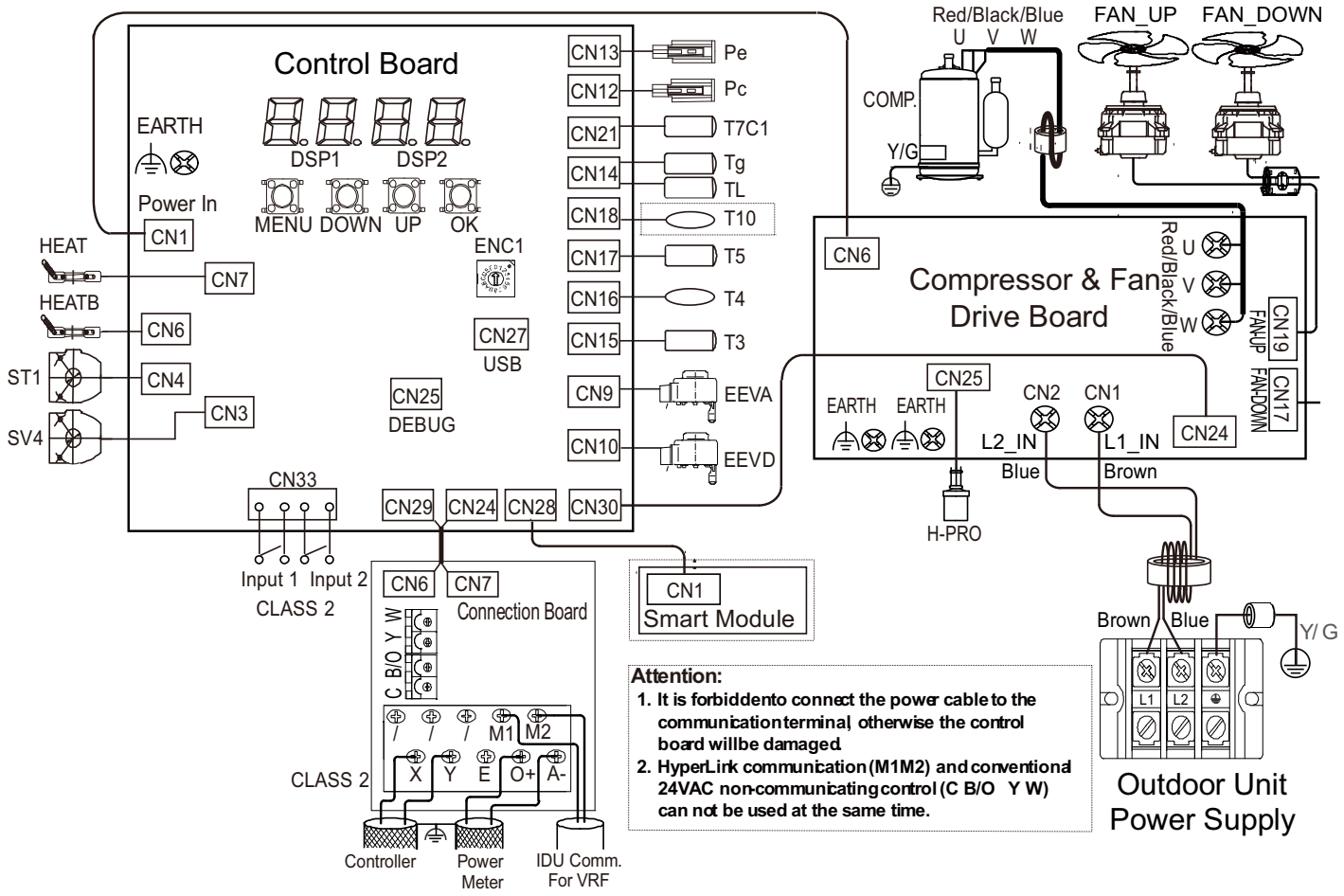

Fig. 15 —4.0 / 5.0 Ton Wiring Diagram

Table 13 — Legend

Code	Name		Code	Name
COMP	Compressor		Pe	Low pressure sensor
EEVA/D	Electronic expansion valve		T3	Heat exchanger temperature sensor
FAN_UP/ FAN_DOWN	DC Fan		T4	Outdoor ambient temperature sensor
HEAT	Crankcase heater		T5	Liquid pipe temperature sensor
HEATB	Pan heater		Tg	Suction temperature sensor
H-PRO	High pressure switch		T10	Additional ambient temperature sensor (optional)
ST1	Four-way valve		T7C1	Compressor discharge temperature sensor
SV4	Solenoid valve		TL	Heat exchanger liquid temperature sensor
Pc	High pressure sensor			

ELECTRICAL CHARACTERISTICS

Table 14 — Outdoor Unit Electrical Characteristics

Model	Power Supply[1]						Compressor	OFM	
	Hz	Volts	Min. volts	Max. volts	MCA[2]	MOP[3]	RLA[5]	kW	FLA
37VMH036HDS3	60Hz	208/230	178	264	25	30	16.5	0.215	1.9
37VMH048HDS3	60Hz	208/230	178	264	28	40	19.0	0.123*2	1.1*2
37VMH060HDS3	60Hz	208/230	178	264	35	40	24.0	0.123*2	1.1*2

Legend:
MCA: Minimum Circuit Amps
MOP: Maximum overcurrent protection amps (A)
MSC: Maximum Starting Current (A)
RLA: Rated Load Amps
FLA: Full Load Amps

NOTES:

1. Units are suitable for use on electrical systems where voltage supplied to unit terminals is not below or above listed range limits. Maximum allowable voltage variation between phases is 2%.
2. Select wire size based on the value of MCA.
3. MOP is maximum overcurrent protection amps and used to select the overcurrent circuit breaker and residual current circuit breaker.
4. MSC indicates the maximum current on compressor start-up in amps.
5. RLA is based on the following conditions: 80 ºF (26.7°C) DB, 67 ºF (19.4°C) WB; outdoor temperature: 104 ºF (40°C) DB.

Manufacturer reserves the right to change, at any time, specifications and designs without notice and without obligations.

COOLING CAPACITY

Table 15 — 3 Ton Capacity

CR	Outdoor Air Temperature (° F DB/WB)	3 Ton Cooling Capacity - Indoor Air Temperature (°F DB/WB)													
		67		71		75		80		85		87		90	
		57		60		63		67		71		72		75	
		TC	PI	TC	PI	TC	PI	TC	PI	TC	PI	TC	PI	TC	PI
130%	5	27.6	0.9	33.5	1.0	39.1	1.2	46.8	1.4	54.8	1.5	55.9	1.6	62.5	1.9
	10.4	27.6	0.9	33.5	1.0	39.1	1.3	46.8	1.4	54.8	1.5	55.9	1.6	62.5	1.9
	14	27.6	0.9	33.5	1.0	39.1	1.3	46.8	1.4	54.8	1.5	55.9	1.6	62.5	2.0
	17.6	27.6	0.9	33.5	1.1	39.1	1.3	46.8	1.5	54.8	1.6	55.9	1.7	62.5	2.0
	23	27.6	0.9	33.5	1.2	39.1	1.3	46.8	1.5	54.8	1.6	55.9	1.8	62.5	2.0
	28.4	27.6	0.9	33.5	1.2	39.1	1.3	46.8	1.6	54.8	1.6	55.9	1.9	62.5	2.1
	32	27.6	1.0	33.5	1.2	39.1	1.3	46.8	1.6	54.8	1.9	55.9	2.0	62.5	2.1
	35.6	27.6	1.0	33.5	1.2	39.1	1.3	46.8	1.6	54.8	1.8	55.9	2.0	62.5	2.2
	39.2	27.6	0.9	33.5	1.2	39.1	1.4	46.8	1.6	54.8	1.9	55.9	2.0	62.5	2.3
	42.8	27.6	1.0	33.5	1.2	39.1	1.3	46.8	1.6	54.8	2.0	55.9	2.0	62.5	2.3
	46.4	27.6	1.0	33.5	1.2	39.1	1.4	46.8	1.7	54.8	2.0	55.9	2.0	62.5	2.4
	50	27.6	1.0	33.5	1.2	39.1	1.4	46.8	1.7	54.8	2.1	55.9	2.0	62.5	2.5
	53.6	27.6	1.0	33.5	1.2	39.1	1.4	46.8	1.8	54.8	2.2	55.9	2.2	62.5	2.8
	57.2	27.6	1.0	33.5	1.3	39.1	1.5	46.8	1.9	54.8	2.4	55.9	2.4	62.5	2.9
	60.8	27.6	1.1	33.5	1.3	39.1	1.6	46.8	2.1	54.8	2.5	55.9	2.6	62.5	2.9
	64.4	27.6	1.1	33.5	1.4	39.1	1.7	46.8	2.1	54.8	2.6	55.9	2.6	62.5	3.1
	68	27.6	1.1	33.5	1.4	39.1	1.7	46.8	2.1	54.8	2.7	55.9	2.6	62.5	3.4
	73.4	27.6	1.2	33.5	1.5	39.1	1.8	46.8	2.4	54.8	3.1	55.9	3.1	62.5	3.9
	77	27.6	1.3	33.5	1.6	39.1	2.0	46.8	2.7	54.8	3.5	55.9	3.4	62.5	4.3
	80.6	27.6	1.5	33.5	1.8	39.1	2.2	46.8	2.9	54.8	3.8	55.9	3.7	62.5	4.7
	84.2	27.6	1.6	33.5	2.0	39.1	2.5	46.8	3.2	54.8	4.1	55.9	4.1	62.5	5.2
	87.8	27.6	1.8	33.5	2.2	39.1	2.7	46.8	3.5	54.8	4.5	55.9	4.5	62.5	5.6
	91.4	27.6	1.9	33.5	2.4	39.1	3.0	46.8	3.8	54.8	4.9	55.9	4.9	60.3	5.7
	95	27.6	2.1	33.5	2.7	39.1	3.3	46.8	4.2	54.8	5.4	55.9	5.3	58.3	5.7
	98.6	27.6	2.3	33.5	2.9	39.1	3.6	46.8	4.6	52.5	5.7	55.9	5.8	56.3	5.7
	102.2	27.6	2.5	33.5	3.2	39.1	3.9	46.8	5.0	51.2	5.7	52.6	5.7	54.0	5.8
	105.8	27.6	2.8	33.5	3.5	39.1	4.2	46.8	5.4	49.3	5.7	50.5	5.7	51.8	5.7
	109.4	27.6	3.0	33.5	3.8	39.1	4.6	44.4	5.7	47.0	5.8	48.2	5.8	49.7	5.8
	113	27.6	3.3	33.5	4.1	39.1	5.0	42.6	5.7	46.0	5.7	47.1	5.7	48.3	5.7
	118.4	27.6	3.7	33.5	4.7	39.1	5.7	39.2	5.3	39.9	4.9	40.6	4.8	41.5	4.7
	122	27.6	4.0	32.2	4.9	32.9	4.7	33.4	4.3	35.1	4.2	35.0	4.0	35.6	3.9
	125	26.1	4.1	26.5	3.9	27.6	3.8	28.5	3.6	28.5	3.3	28.8	3.2	28.5	3.0
120%	5	25.5	0.8	30.9	1.0	36.1	1.1	43.2	1.5	50.6	1.5	51.6	1.6	57.7	1.9
	10.4	25.5	0.8	30.9	0.9	36.1	1.1	43.2	1.4	50.6	1.5	51.6	1.6	57.7	1.9
	14	25.5	0.8	30.9	1.0	36.1	1.2	43.2	1.4	50.6	1.5	51.6	1.6	57.7	1.9
	17.6	25.5	0.8	30.9	1.0	36.1	1.2	43.2	1.4	50.6	1.6	51.6	1.6	57.7	1.9
	23	25.5	0.8	30.9	1.1	36.1	1.2	43.2	1.4	50.6	1.6	51.6	1.7	57.7	1.9
	28.4	25.5	0.8	30.9	1.1	36.1	1.2	43.2	1.4	50.6	1.7	51.6	1.7	57.7	1.9
	32	25.5	0.9	30.9	1.1	36.1	1.2	43.2	1.4	50.6	1.7	51.6	1.7	57.7	2.0
	35.6	25.5	0.9	30.9	1.1	36.1	1.2	43.2	1.4	50.6	1.7	51.6	1.7	57.7	2.0
	39.2	25.5	0.9	30.9	1.1	36.1	1.3	43.2	1.4	50.6	1.7	51.6	1.7	57.7	2.0
	42.8	25.5	0.9	30.9	1.0	36.1	1.3	43.2	1.5	50.6	1.7	51.6	1.7	57.7	2.1
	46.4	25.5	0.9	30.9	1.1	36.1	1.2	43.2	1.5	50.6	1.8	51.6	1.7	57.7	2.1
	50	25.5	0.9	30.9	1.1	36.1	1.3	43.2	1.6	50.6	1.9	51.6	1.8	57.7	2.2
	53.6	25.5	0.9	30.9	1.1	36.1	1.3	43.2	1.6	50.6	2.0	51.6	1.9	57.7	2.4
	57.2	25.5	0.9	30.9	1.1	36.1	1.3	43.2	1.7	50.6	2.1	51.6	2.0	57.7	2.6
	60.8	25.5	1.0	30.9	1.2	36.1	1.4	43.2	1.8	50.6	2.3	51.6	2.3	57.7	2.7
	64.4	25.5	1.0	30.9	1.3	36.1	1.5	43.2	1.9	50.6	2.3	51.6	2.4	57.7	2.7
	68	25.5	1.0	30.9	1.3	36.1	1.5	43.2	1.9	50.6	2.4	51.6	2.4	57.7	2.8
	73.4	25.5	1.1	30.9	1.3	36.1	1.5	43.2	2.0	50.6	2.6	51.6	2.5	57.7	3.2
	77	25.5	1.2	30.9	1.4	36.1	1.7	43.2	2.2	50.6	2.9	51.6	2.8	57.7	3.5
	80.6	25.5	1.3	30.9	1.6	36.1	1.9	43.2	2.5	50.6	3.2	51.6	3.1	57.7	3.9
	84.2	25.5	1.5	30.9	1.8	36.1	2.1	43.2	2.7	50.6	3.5	51.6	3.4	57.7	4.3
	87.8	25.5	1.6	30.9	1.9	36.1	2.3	43.2	3.0	50.6	3.8	51.6	3.7	57.7	4.7
	91.4	25.5	1.8	30.9	2.1	36.1	2.6	43.2	3.3	50.6	4.2	51.6	4.1	57.7	5.1
	95	25.5	1.9	30.9	2.3	36.1	2.8	43.2	3.6	50.6	4.5	51.6	4.5	57.7	5.6
	98.6	25.5	2.1	30.9	2.6	36.1	3.1	43.2	3.9	50.6	5.0	51.6	4.9	55.7	5.7
	102.2	25.5	2.3	30.9	2.8	36.1	3.4	43.2	4.3	50.6	5.4	51.6	5.4	53.9	5.8
	105.8	25.5	2.5	30.9	3.1	36.1	3.7	43.2	4.7	48.2	5.7	51.6	5.9	52.0	5.7
	109.4	25.5	2.7	30.9	3.4	36.1	4.0	43.2	5.1	47.2	5.8	48.3	5.7	49.5	5.8
	113	25.5	3.0	30.9	3.7	36.1	4.4	43.2	5.6	45.6	5.7	46.8	5.7	48.1	5.8
	118.4	25.5	3.4	30.9	4.2	36.1	5.0	39.1	5.3	40.1	5.0	40.2	4.8	40.6	4.6
	122	25.5	3.6	30.9	4.6	32.7	4.7	33.6	4.4	34.2	4.1	35.3	4.1	34.7	3.8
	125	25.5	4.0	26.6	4.0	27.4	3.8	27.7	3.5	29.0	3.4	28.6	3.2	28.3	3.0

Manufacturer reserves the right to change, at any time, specifications and designs without notice and without obligations.

CR	Outdoor Air Temperature (° F DB/WB)	3 Ton Cooling Capacity - Indoor Air Temperature (°F DB/WB)													
		67		71		75		80		85		87		90	
		57		60		63		67		71		72		75	
		TC	PI	TC	PI	TC	PI	TC	PI	TC	PI	TC	PI	TC	PI
110%	5	23.3	0.7	28.4	0.9	33.1	1.0	39.6	1.2	46.4	1.4	47.3	1.5	52.9	1.7
	10.4	23.3	0.7	28.4	0.9	33.1	1.0	39.6	1.3	46.4	1.4	47.3	1.5	52.9	1.7
	14	23.3	0.7	28.4	0.9	33.1	1.0	39.6	1.3	46.4	1.4	47.3	1.5	52.9	1.7
	17.6	23.3	0.7	28.4	0.9	33.1	1.0	39.6	1.3	46.4	1.4	47.3	1.5	52.9	1.7
	23	23.3	0.7	28.4	0.9	33.1	1.1	39.6	1.3	46.4	1.4	47.3	1.5	52.9	1.7
	28.4	23.3	0.7	28.4	1.0	33.1	1.1	39.6	1.3	46.4	1.5	47.3	1.5	52.9	1.7
	32	23.3	0.7	28.4	1.0	33.1	1.1	39.6	1.3	46.4	1.5	47.3	1.5	52.9	1.7
	35.6	23.3	0.8	28.4	1.0	33.1	1.1	39.6	1.3	46.4	1.5	47.3	1.5	52.9	1.7
	39.2	23.3	0.8	28.4	1.0	33.1	1.1	39.6	1.3	46.4	1.5	47.3	1.5	52.9	1.8
	42.8	23.3	0.8	28.4	1.0	33.1	1.1	39.6	1.3	46.4	1.6	47.3	1.5	52.9	1.8
	46.4	23.3	0.8	28.4	1.0	33.1	1.1	39.6	1.3	46.4	1.6	47.3	1.5	52.9	1.9
	50	23.3	0.8	28.4	1.0	33.1	1.1	39.6	1.4	46.4	1.6	47.3	1.6	52.9	1.9
	53.6	23.3	0.8	28.4	1.0	33.1	1.2	39.6	1.4	46.4	1.7	47.3	1.7	52.9	2.0
	57.2	23.3	0.8	28.4	1.0	33.1	1.2	39.6	1.5	46.4	1.8	47.3	1.8	52.9	2.2
	60.8	23.3	0.9	28.4	1.0	33.1	1.3	39.6	1.6	46.4	2.0	47.3	1.9	52.9	2.4
	64.4	23.3	0.9	28.4	1.1	33.1	1.3	39.6	1.7	46.4	2.1	47.3	2.1	52.9	2.5
	68	23.3	0.9	28.4	1.2	33.1	1.4	39.6	1.7	46.4	2.1	47.3	2.2	52.9	2.5
	73.4	23.3	1.0	28.4	1.2	33.1	1.4	39.6	1.8	46.4	2.2	47.3	2.2	52.9	2.6
	77	23.3	1.1	28.4	1.3	33.1	1.5	39.6	1.8	46.4	2.4	47.3	2.3	52.9	2.9
	80.6	23.3	1.2	28.4	1.4	33.1	1.6	39.6	2.1	46.4	2.6	47.3	2.6	52.9	3.2
	84.2	23.3	1.3	28.4	1.6	33.1	1.8	39.6	2.3	46.4	2.9	47.3	2.8	52.9	3.5
	87.8	23.3	1.4	28.4	1.7	33.1	2.0	39.6	2.5	46.4	3.2	47.3	3.1	52.9	3.8
	91.4	23.3	1.6	28.4	1.9	33.1	2.2	39.6	2.8	46.4	3.5	47.3	3.4	52.9	4.2
	95	23.3	1.7	28.4	2.1	33.1	2.4	39.6	3.1	46.4	3.8	47.3	3.8	52.9	4.6
	98.6	23.3	1.9	28.4	2.3	33.1	2.7	39.6	3.4	46.4	4.2	47.3	4.1	52.9	5.0
	102.2	23.3	2.1	28.4	2.5	33.1	2.9	39.6	3.7	46.4	4.6	47.3	4.5	52.9	5.5
	105.8	23.3	2.2	28.4	2.7	33.1	3.2	39.6	4.0	46.4	5.0	47.3	4.9	51.4	5.8
	109.4	23.3	2.4	28.4	3.0	33.1	3.5	39.6	4.4	46.4	5.4	47.3	5.4	49.4	5.8
	113	23.3	2.7	28.4	3.2	33.1	3.9	39.6	4.8	45.1	5.8	47.3	5.9	47.5	5.8
	118.4	23.3	3.0	28.4	3.7	33.1	4.4	39.6	5.5	39.9	5.1	40.0	4.9	40.6	4.7
	122	23.3	3.3	28.4	4.0	33.1	4.8	33.3	4.4	33.9	4.1	34.3	4.0	34.9	3.9
	125	23.3	3.6	26.4	4.0	26.9	3.8	28.0	3.6	28.1	3.3	29.0	3.3	28.8	3.1
100%	5	21.2	0.7	25.8	0.8	30.1	1.0	36.0	1.1	42.2	1.3	43.0	1.4	48.1	1.5
	10.4	21.2	0.7	25.8	0.8	30.1	0.9	36.0	1.1	42.2	1.4	43.0	1.4	48.1	1.5
	14	21.2	0.7	25.8	0.8	30.1	0.9	36.0	1.2	42.2	1.4	43.0	1.4	48.1	1.5
	17.6	21.2	0.7	25.8	0.8	30.1	0.9	36.0	1.2	42.2	1.4	43.0	1.4	48.1	1.5
	23	21.2	0.7	25.8	0.8	30.1	0.9	36.0	1.2	42.2	1.4	43.0	1.4	48.1	1.5
	28.4	21.2	0.7	25.8	0.8	30.1	1.0	36.0	1.2	42.2	1.4	43.0	1.4	48.1	1.5
	32	21.2	0.7	25.8	0.8	30.1	1.0	36.0	1.2	42.2	1.4	43.0	1.4	48.1	1.5
	35.6	21.2	0.7	25.8	0.9	30.1	1.0	36.0	1.2	42.2	1.4	43.0	1.4	48.1	1.6
	39.2	21.2	0.7	25.8	0.9	30.1	1.0	36.0	1.2	42.2	1.4	43.0	1.4	48.1	1.5
	42.8	21.2	0.7	25.8	0.8	30.1	1.0	36.0	1.2	42.2	1.4	43.0	1.4	48.1	1.6
	46.4	21.2	0.8	25.8	0.9	30.1	1.0	36.0	1.2	42.2	1.4	43.0	1.4	48.1	1.6
	50	21.2	0.7	25.8	0.9	30.1	1.0	36.0	1.2	42.2	1.4	43.0	1.4	48.1	1.7
	53.6	21.2	0.6	25.8	0.8	30.1	1.0	36.0	1.2	42.2	1.5	43.0	1.4	48.1	1.7
	57.2	21.2	0.7	25.8	0.9	30.1	1.0	36.0	1.3	42.2	1.6	43.0	1.5	48.1	1.9
	60.8	21.2	0.7	25.8	0.9	30.1	1.1	36.0	1.3	42.2	1.7	43.0	1.6	48.1	2.0
	64.4	21.2	0.8	25.8	1.0	30.1	1.2	36.0	1.5	42.2	1.8	43.0	1.8	48.1	2.2
	68	21.2	0.8	25.8	1.0	30.1	1.3	36.0	1.6	42.2	1.9	43.0	2.0	48.1	2.2
	73.4	21.2	0.9	25.8	1.1	30.1	1.3	36.0	1.6	42.2	2.0	43.0	2.0	48.1	2.3
	77	21.2	0.9	25.8	1.1	30.1	1.3	36.0	1.6	42.2	2.0	43.0	2.0	48.1	2.3
	80.6	21.2	1.0	25.8	1.2	30.1	1.4	36.0	1.7	42.2	2.1	43.0	2.1	48.1	2.6
	84.2	21.2	1.2	25.8	1.4	30.1	1.6	36.0	1.9	42.2	2.4	43.0	2.3	48.1	2.8
	87.8	21.2	1.3	25.8	1.5	30.1	1.8	36.0	2.1	42.2	2.6	43.0	2.6	48.1	3.1
	91.4	21.2	1.4	25.8	1.7	30.1	1.9	36.0	2.3	42.2	2.9	43.0	2.8	48.1	3.4
	95	21.2	1.5	25.8	1.8	30.1	2.1	36.0	2.7	42.2	3.2	43.0	3.1	48.1	3.8
	98.6	21.2	1.7	25.8	2.0	30.1	2.3	36.0	2.9	42.2	3.5	43.0	3.4	48.1	4.1
	102.2	21.2	1.8	25.8	2.2	30.1	2.5	36.0	3.1	42.2	3.9	43.0	3.8	48.1	4.5
	105.8	21.2	2.0	25.8	2.4	30.1	2.8	36.0	3.4	42.2	4.2	43.0	4.1	48.1	5.0
	109.4	21.2	2.2	25.8	2.6	30.1	3.1	36.0	3.8	42.2	4.6	43.0	4.5	48.1	5.4
	113	21.2	2.4	25.8	2.9	30.1	3.3	36.0	4.1	42.2	5.0	43.0	4.9	46.9	5.8
	118.4	21.2	2.7	25.8	3.2	30.1	3.8	36.0	4.7	39.6	5.2	39.9	5.0	40.3	4.8
	122	21.2	2.9	25.8	3.5	30.1	4.2	33.2	4.5	34.0	4.2	34.5	4.1	34.5	3.9
	125	21.2	3.2	25.8	3.9	26.9	3.8	27.7	3.6	28.5	3.4	28.1	3.2	29.2	3.2

Manufacturer reserves the right to change, at any time, specifications and designs without notice and without obligations.

CR	Outdoor Air Temperature (° F DB/WB)	3 Ton Cooling Capacity - Indoor Air Temperature (°F DB/WB)													
		67		71		75		80		85		87		90	
		57		60		63		67		71		72		75	
		TC	PI	TC	PI	TC	PI	TC	PI	TC	PI	TC	PI	TC	PI
90	5	19.1	0.6	23.2	0.7	27.1	0.8	32.4	1.0	38.0	1.2	38.7	1.2	43.3	1.4
	10.4	19.1	0.6	23.2	0.7	27.1	0.8	32.4	1.0	38.0	1.2	38.7	1.2	43.3	1.4
	14	19.1	0.6	23.2	0.7	27.1	0.8	32.4	1.0	38.0	1.2	38.7	1.2	43.3	1.4
	17.6	19.1	0.6	23.2	0.7	27.1	0.8	32.4	1.0	38.0	1.2	38.7	1.2	43.3	1.4
	23	19.1	0.6	23.2	0.7	27.1	0.8	32.4	1.0	38.0	1.2	38.7	1.2	43.3	1.4
	28.4	19.1	0.6	23.2	0.7	27.1	0.8	32.4	1.0	38.0	1.2	38.7	1.2	43.3	1.4
	32	19.1	0.6	23.2	0.7	27.1	0.9	32.4	1.0	38.0	1.2	38.7	1.2	43.3	1.4
	35.6	19.1	0.6	23.2	0.7	27.1	0.9	32.4	1.0	38.0	1.2	38.7	1.1	43.3	1.4
	39.2	19.1	0.6	23.2	0.7	27.1	0.8	32.4	1.0	38.0	1.2	38.7	1.1	43.3	1.4
	42.8	19.1	0.6	23.2	0.8	27.1	0.9	32.4	1.0	38.0	1.2	38.7	1.2	43.3	1.4
	46.4	19.1	0.7	23.2	0.7	27.1	0.9	32.4	1.0	38.0	1.3	38.7	1.2	43.3	1.4
	50	19.1	0.6	23.2	0.7	27.1	0.9	32.4	1.0	38.0	1.3	38.7	1.2	43.3	1.4
	53.6	19.1	0.6	23.2	0.7	27.1	0.9	32.4	1.1	38.0	1.3	38.7	1.2	43.3	1.5
	57.2	19.1	0.6	23.2	0.7	27.1	0.9	32.4	1.1	38.0	1.3	38.7	1.3	43.3	1.5
	60.8	19.1	0.7	23.2	0.8	27.1	0.9	32.4	1.2	38.0	1.4	38.7	1.4	43.3	1.7
	64.4	19.1	0.7	23.2	0.9	27.1	1.0	32.4	1.3	38.0	1.6	38.7	1.5	43.3	1.9
	68	19.1	0.8	23.2	0.9	27.1	1.1	32.4	1.4	38.0	1.7	38.7	1.7	43.3	2.0
	73.4	19.1	0.8	23.2	1.0	27.1	1.1	32.4	1.4	38.0	1.7	38.7	1.8	43.3	2.0
	77	19.1	0.8	23.2	1.0	27.1	1.1	32.4	1.4	38.0	1.8	38.7	1.8	43.3	2.0
	80.6	19.1	0.9	23.2	1.1	27.1	1.2	32.4	1.5	38.0	1.8	38.7	1.8	43.3	2.1
	84.2	19.1	1.0	23.2	1.2	27.1	1.4	32.4	1.6	38.0	1.9	38.7	1.9	43.3	2.3
	87.8	19.1	1.1	23.2	1.3	27.1	1.5	32.4	1.8	38.0	2.1	38.7	2.0	43.3	2.5
	91.4	19.1	1.3	23.2	1.5	27.1	1.7	32.4	2.0	38.0	2.4	38.7	2.3	43.3	2.8
	95	19.1	1.4	23.2	1.6	27.1	1.8	32.4	2.2	38.0	2.6	38.7	2.5	43.3	3.1
	98.6	19.1	1.5	23.2	1.8	27.1	2.0	32.4	2.4	38.0	2.9	38.7	2.8	43.3	3.4
	102.2	19.1	1.6	23.2	1.9	27.1	2.2	32.4	2.6	38.0	3.2	38.7	3.1	43.3	3.7
	105.8	19.1	1.8	23.2	2.1	27.1	2.4	32.4	2.9	38.0	3.5	38.7	3.4	43.3	4.1
	109.4	19.1	2.0	23.2	2.3	27.1	2.6	32.4	3.2	38.0	3.8	38.7	3.8	43.3	4.5
	113	19.1	2.1	23.2	2.5	27.1	2.9	32.4	3.5	38.0	4.2	38.7	4.1	43.3	4.9
	118.4	19.1	2.4	23.2	2.9	27.1	3.3	32.4	4.0	38.0	4.8	38.7	4.7	40.1	4.9
	122	19.1	2.6	23.2	3.1	27.1	3.6	32.4	4.4	33.8	4.3	34.0	4.1	34.6	4.0
	5	19.1	0.6	23.2	0.7	27.1	0.8	32.4	1.0	38.0	1.2	38.7	1.2	43.3	1.4
80%	5	17.0	0.5	20.6	0.6	24.1	0.8	28.8	0.9	33.7	1.0	34.4	1.1	38.5	1.2
	10.4	17.0	0.5	20.6	0.6	24.1	0.8	28.8	0.9	33.7	1.0	34.4	1.1	38.5	1.2
	14	17.0	0.5	20.6	0.6	24.1	0.8	28.8	0.9	33.7	1.0	34.4	1.1	38.5	1.2
	17.6	17.0	0.5	20.6	0.6	24.1	0.8	28.8	0.9	33.7	1.0	34.4	1.1	38.5	1.2
	23	17.0	0.5	20.6	0.7	24.1	0.8	28.8	0.9	33.7	1.1	34.4	1.0	38.5	1.2
	28.4	17.0	0.5	20.6	0.7	24.1	0.7	28.8	0.9	33.7	1.1	34.4	1.0	38.5	1.2
	32	17.0	0.6	20.6	0.6	24.1	0.7	28.8	0.9	33.7	1.1	34.4	1.0	38.5	1.2
	35.6	17.0	0.5	20.6	0.6	24.1	0.8	28.8	0.9	33.7	1.1	34.4	1.0	38.5	1.1
	39.2	17.0	0.6	20.6	0.6	24.1	0.7	28.8	0.9	33.7	1.1	34.4	1.0	38.5	1.2
	42.8	17.0	0.6	20.6	0.7	24.1	0.7	28.8	0.9	33.7	1.0	34.4	1.0	38.5	1.2
	46.4	17.0	0.6	20.6	0.7	24.1	0.7	28.8	0.9	33.7	1.1	34.4	1.0	38.5	1.2
	50	17.0	0.6	20.6	0.6	24.1	0.7	28.8	0.9	33.7	1.1	34.4	1.1	38.5	1.2
	53.6	17.0	0.6	20.6	0.6	24.1	0.7	28.8	0.9	33.7	1.1	34.4	1.1	38.5	1.3
	57.2	17.0	0.6	20.6	0.6	24.1	0.8	28.8	0.9	33.7	1.1	34.4	1.1	38.5	1.3
	60.8	17.0	0.6	20.6	0.7	24.1	0.8	28.8	1.0	33.7	1.2	34.4	1.1	38.5	1.4
	64.4	17.0	0.6	20.6	0.7	24.1	0.8	28.8	1.1	33.7	1.3	34.4	1.3	38.5	1.5
	68	17.0	0.7	20.6	0.8	24.1	0.9	28.8	1.2	33.7	1.4	34.4	1.4	38.5	1.7
	73.4	17.0	0.7	20.6	0.9	24.1	1.0	28.8	1.3	33.7	1.6	34.4	1.6	38.5	1.8
	77	17.0	0.7	20.6	0.9	24.1	1.0	28.8	1.3	33.7	1.6	34.4	1.6	38.5	1.8
	80.6	17.0	0.8	20.6	0.9	24.1	1.1	28.8	1.3	33.7	1.6	34.4	1.6	38.5	1.8
	84.2	17.0	0.9	20.6	1.1	24.1	1.2	28.8	1.4	33.7	1.6	34.4	1.7	38.5	1.8
	87.8	17.0	1.0	20.6	1.2	24.1	1.3	28.8	1.5	33.7	1.7	34.4	1.7	38.5	1.9
	91.4	17.0	1.1	20.6	1.3	24.1	1.4	28.8	1.7	33.7	1.9	34.4	1.9	38.5	2.2
	95	17.0	1.2	20.6	1.4	24.1	1.6	28.8	1.9	33.7	2.1	34.4	2.1	38.5	2.4
	98.6	17.0	1.3	20.6	1.5	24.1	1.7	28.8	2.0	33.7	2.4	34.4	2.3	38.5	2.7
	102.2	17.0	1.5	20.6	1.7	24.1	1.9	28.8	2.2	33.7	2.6	34.4	2.5	38.5	3.0
	105.8	17.0	1.6	20.6	1.9	24.1	2.1	28.8	2.4	33.7	2.9	34.4	2.8	38.5	3.3
	109.4	17.0	1.7	20.6	2.0	24.1	2.3	28.8	2.7	33.7	3.2	34.4	3.1	38.5	3.6
	113	17.0	1.9	20.6	2.2	24.1	2.5	28.8	2.9	33.7	3.5	34.4	3.4	38.5	4.0
	118.4	17.0	2.1	20.6	2.5	24.1	2.8	28.8	3.3	33.7	4.0	34.4	3.9	38.5	4.6
	122	17.0	2.3	20.6	2.7	24.1	3.1	28.8	3.7	33.7	4.4	34.4	4.3	34.3	4.1
	125	17.0	2.5	20.6	3.0	24.1	3.4	27.2	3.7	27.7	3.4	27.9	3.3	28.3	3.2

Manufacturer reserves the right to change, at any time, specifications and designs without notice and without obligations.

CR	Outdoor Air Temperature (° F DB/WB)	3 Ton Cooling Capacity - Indoor Air Temperature (°F DB/WB)													
		67		71		75		80		85		87		90	
		57		60		63		67		71		72		75	
		TC	PI	TC	PI	TC	PI	TC	PI	TC	PI	TC	PI	TC	PI
70%	5	14.9	0.5	18.1	0.5	21.1	0.6	25.2	0.8	29.5	0.9	30.1	1.0	33.7	1.0
	10.4	14.9	0.5	18.1	0.6	21.1	0.6	25.2	0.8	29.5	0.9	30.1	0.9	33.7	1.1
	14	14.9	0.5	18.1	0.6	21.1	0.7	25.2	0.8	29.5	0.9	30.1	0.9	33.7	1.1
	17.6	14.9	0.5	18.1	0.6	21.1	0.7	25.2	0.8	29.5	0.9	30.1	0.9	33.7	1.1
	23	14.9	0.5	18.1	0.6	21.1	0.7	25.2	0.8	29.5	0.9	30.1	0.9	33.7	1.1
	28.4	14.9	0.5	18.1	0.6	21.1	0.6	25.2	0.8	29.5	0.9	30.1	0.9	33.7	1.1
	32	14.9	0.5	18.1	0.6	21.1	0.7	25.2	0.8	29.5	0.9	30.1	0.9	33.7	1.1
	35.6	14.9	0.5	18.1	0.6	21.1	0.7	25.2	0.8	29.5	0.9	30.1	0.9	33.7	1.1
	39.2	14.9	0.5	18.1	0.6	21.1	0.7	25.2	0.8	29.5	0.9	30.1	0.9	33.7	1.1
	42.8	14.9	0.5	18.1	0.6	21.1	0.7	25.2	0.8	29.5	0.9	30.1	0.9	33.7	1.1
	46.4	14.9	0.5	18.1	0.6	21.1	0.6	25.2	0.8	29.5	0.9	30.1	0.9	33.7	1.1
	50	14.9	0.5	18.1	0.6	21.1	0.6	25.2	0.8	29.5	0.9	30.1	0.9	33.7	1.1
	53.6	14.9	0.5	18.1	0.6	21.1	0.6	25.2	0.8	29.5	0.9	30.1	0.9	33.7	1.1
	57.2	14.9	0.5	18.1	0.6	21.1	0.6	25.2	0.8	29.5	0.9	30.1	0.9	33.7	1.1
	60.8	14.9	0.5	18.1	0.6	21.1	0.7	25.2	0.8	29.5	1.0	30.1	1.0	33.7	1.1
	64.4	14.9	0.6	18.1	0.7	21.1	0.7	25.2	0.9	29.5	1.1	30.1	1.0	33.7	1.3
	68	14.9	0.6	18.1	0.7	21.1	0.8	25.2	0.9	29.5	1.2	30.1	1.2	33.7	1.4
	73.4	14.9	0.6	18.1	0.8	21.1	0.9	25.2	1.1	29.5	1.3	30.1	1.3	33.7	1.5
	77	14.9	0.7	18.1	0.8	21.1	0.9	25.2	1.1	29.5	1.3	30.1	1.4	33.7	1.6
	80.6	14.9	0.7	18.1	0.8	21.1	0.9	25.2	1.1	29.5	1.4	30.1	1.4	33.7	1.6
	84.2	14.9	0.8	18.1	0.9	21.1	1.0	25.2	1.1	29.5	1.4	30.1	1.4	33.7	1.6
	87.8	14.9	0.9	18.1	1.0	21.1	1.1	25.2	1.3	29.5	1.4	30.1	1.4	33.7	1.6
	91.4	14.9	1.0	18.1	1.1	21.1	1.2	25.2	1.4	29.5	1.6	30.1	1.5	33.7	1.8
	95	14.9	1.1	18.1	1.2	21.1	1.4	25.2	1.6	29.5	1.8	30.1	1.7	33.7	2.0
	98.6	14.9	1.2	18.1	1.3	21.1	1.5	25.2	1.7	29.5	2.0	30.1	1.9	33.7	2.2
	102.2	14.9	1.3	18.1	1.5	21.1	1.6	25.2	1.9	29.5	2.2	30.1	2.1	33.7	2.4
	105.8	14.9	1.4	18.1	1.6	21.1	1.8	25.2	2.1	29.5	2.4	30.1	2.3	33.7	2.6
	109.4	14.9	1.5	18.1	1.7	21.1	2.0	25.2	2.3	29.5	2.6	30.1	2.5	33.7	2.9
	113	14.9	1.6	18.1	1.9	21.1	2.1	25.2	2.5	29.5	2.8	30.1	2.8	33.7	3.2
	118.4	14.9	1.9	18.1	2.2	21.1	2.4	25.2	2.8	29.5	3.3	30.1	3.2	33.7	3.7
	122	14.9	2.0	18.1	2.4	21.1	2.7	25.2	3.1	29.5	3.6	30.1	3.5	33.7	4.1
	125	14.9	2.2	18.1	2.6	21.1	2.9	25.2	3.4	27.6	3.5	27.7	3.4	28.1	3.3
60%	5	12.7	0.4	15.5	0.5	18.1	0.5	21.6	0.7	25.3	0.8	25.8	0.8	28.9	0.9
	10.4	12.7	0.4	15.5	0.5	18.1	0.6	21.6	0.7	25.3	0.8	25.8	0.8	28.9	0.9
	14	12.7	0.4	15.5	0.5	18.1	0.6	21.6	0.7	25.3	0.8	25.8	0.8	28.9	0.9
	17.6	12.7	0.4	15.5	0.5	18.1	0.6	21.6	0.7	25.3	0.8	25.8	0.8	28.9	0.9
	23	12.7	0.4	15.5	0.5	18.1	0.6	21.6	0.7	25.3	0.8	25.8	0.8	28.9	0.9
	28.4	12.7	0.4	15.5	0.5	18.1	0.6	21.6	0.7	25.3	0.8	25.8	0.8	28.9	0.9
	32	12.7	0.4	15.5	0.5	18.1	0.6	21.6	0.7	25.3	0.8	25.8	0.8	28.9	0.9
	35.6	12.7	0.4	15.5	0.5	18.1	0.6	21.6	0.7	25.3	0.8	25.8	0.8	28.9	0.9
	39.2	12.7	0.5	15.5	0.5	18.1	0.6	21.6	0.7	25.3	0.8	25.8	0.8	28.9	0.9
	42.8	12.7	0.5	15.5	0.5	18.1	0.6	21.6	0.7	25.3	0.8	25.8	0.8	28.9	0.9
	46.4	12.7	0.5	15.5	0.6	18.1	0.6	21.6	0.6	25.3	0.8	25.8	0.8	28.9	0.9
	50	12.7	0.5	15.5	0.5	18.1	0.6	21.6	0.7	25.3	0.8	25.8	0.8	28.9	0.9
	53.6	12.7	0.5	15.5	0.5	18.1	0.6	21.6	0.6	25.3	0.8	25.8	0.8	28.9	0.9
	57.2	12.7	0.5	15.5	0.5	18.1	0.6	21.6	0.7	25.3	0.8	25.8	0.8	28.9	0.9
	60.8	12.7	0.5	15.5	0.6	18.1	0.6	21.6	0.7	25.3	0.8	25.8	0.8	28.9	0.9
	64.4	12.7	0.5	15.5	0.6	18.1	0.6	21.6	0.7	25.3	0.9	25.8	0.8	28.9	1.0
	68	12.7	0.5	15.5	0.6	18.1	0.7	21.6	0.8	25.3	0.9	25.8	0.9	28.9	1.1
	73.4	12.7	0.6	15.5	0.7	18.1	0.8	21.6	0.9	25.3	1.1	25.8	1.1	28.9	1.3
	77	12.7	0.6	15.5	0.7	18.1	0.8	21.6	0.9	25.3	1.1	25.8	1.1	28.9	1.3
	80.6	12.7	0.6	15.5	0.7	18.1	0.8	21.6	0.9	25.3	1.1	25.8	1.1	28.9	1.3
	84.2	12.7	0.7	15.5	0.8	18.1	0.8	21.6	0.9	25.3	1.1	25.8	1.2	28.9	1.3
	87.8	12.7	0.8	15.5	0.9	18.1	0.9	21.6	1.0	25.3	1.2	25.8	1.2	28.9	1.3
	91.4	12.7	0.8	15.5	1.0	18.1	1.0	21.6	1.2	25.3	1.3	25.8	1.3	28.9	1.4
	95	12.7	0.9	15.5	1.1	18.1	1.1	21.6	1.3	25.3	1.4	25.8	1.4	28.9	1.6
	98.6	12.7	1.0	15.5	1.1	18.1	1.3	21.6	1.4	25.3	1.6	25.8	1.5	28.9	1.7
	102.2	12.7	1.1	15.5	1.3	18.1	1.4	21.6	1.6	25.3	1.8	25.8	1.7	28.9	1.9
	105.8	12.7	1.2	15.5	1.4	18.1	1.5	21.6	1.7	25.3	1.9	25.8	1.9	28.9	2.1
	109.4	12.7	1.3	15.5	1.5	18.1	1.7	21.6	1.9	25.3	2.1	25.8	2.1	28.9	2.3
	113	12.7	1.4	15.5	1.6	18.1	1.8	21.6	2.1	25.3	2.3	25.8	2.3	28.9	2.6
	118.4	12.7	1.6	15.5	1.9	18.1	2.1	21.6	2.4	25.3	2.7	25.8	2.6	28.9	3.0
	122	12.7	1.7	15.5	2.0	18.1	2.3	21.6	2.6	25.3	2.9	25.8	2.9	28.9	3.3
	125	12.7	1.9	15.5	2.2	18.1	2.5	21.6	2.8	25.3	3.2	25.8	3.2	27.9	3.4

Manufacturer reserves the right to change, at any time, specifications and designs without notice and without obligations.

CR	Outdoor Air Temperature (° F DB/WB)	3 Ton Cooling Capacity - Indoor Air Temperature (°F DB/WB)													
		67		71		75		80		85		87		90	
		57		60		63		67		71		72		75	
		TC	PI	TC	PI	TC	PI	TC	PI	TC	PI	TC	PI	TC	PI
50%	5	10.6	0.3	12.9	0.4	15.0	0.5	18.0	0.5	21.1	0.6	21.5	0.7	24.0	0.7
	10.4	10.6	0.3	12.9	0.4	15.0	0.5	18.0	0.6	21.1	0.6	21.5	0.7	24.0	0.7
	14	10.6	0.3	12.9	0.4	15.0	0.5	18.0	0.6	21.1	0.7	21.5	0.7	24.0	0.8
	17.6	10.6	0.3	12.9	0.4	15.0	0.5	18.0	0.6	21.1	0.6	21.5	0.7	24.0	0.7
	23	10.6	0.3	12.9	0.4	15.0	0.5	18.0	0.6	21.1	0.7	21.5	0.7	24.0	0.8
	28.4	10.6	0.3	12.9	0.4	15.0	0.5	18.0	0.6	21.1	0.6	21.5	0.7	24.0	0.7
	32	10.6	0.4	12.9	0.4	15.0	0.5	18.0	0.6	21.1	0.7	21.5	0.7	24.0	0.7
	35.6	10.6	0.4	12.9	0.4	15.0	0.5	18.0	0.6	21.1	0.6	21.5	0.7	24.0	0.7
	39.2	10.6	0.4	12.9	0.5	15.0	0.5	18.0	0.6	21.1	0.6	21.5	0.6	24.0	0.7
	42.8	10.6	0.4	12.9	0.5	15.0	0.6	18.0	0.6	21.1	0.6	21.5	0.7	24.0	0.7
	46.4	10.6	0.4	12.9	0.5	15.0	0.5	18.0	0.6	21.1	0.6	21.5	0.6	24.0	0.7
	50	10.6	0.4	12.9	0.5	15.0	0.5	18.0	0.6	21.1	0.6	21.5	0.6	24.0	0.7
	53.6	10.6	0.4	12.9	0.5	15.0	0.5	18.0	0.6	21.1	0.6	21.5	0.7	24.0	0.7
	57.2	10.6	0.4	12.9	0.5	15.0	0.5	18.0	0.6	21.1	0.6	21.5	0.7	24.0	0.7
	60.8	10.6	0.4	12.9	0.5	15.0	0.6	18.0	0.6	21.1	0.7	21.5	0.6	24.0	0.7
	64.4	10.6	0.4	12.9	0.5	15.0	0.6	18.0	0.6	21.1	0.7	21.5	0.7	24.0	0.8
	68	10.6	0.4	12.9	0.5	15.0	0.6	18.0	0.7	21.1	0.7	21.5	0.7	24.0	0.8
	73.4	10.6	0.5	12.9	0.6	15.0	0.7	18.0	0.8	21.1	0.9	21.5	0.9	24.0	1.0
	77	10.6	0.5	12.9	0.6	15.0	0.7	18.0	0.8	21.1	0.9	21.5	0.9	24.0	1.1
	80.6	10.6	0.6	12.9	0.6	15.0	0.7	18.0	0.8	21.1	0.9	21.5	1.0	24.0	1.1
	84.2	10.6	0.6	12.9	0.7	15.0	0.7	18.0	0.8	21.1	0.9	21.5	1.0	24.0	1.1
	87.8	10.6	0.7	12.9	0.7	15.0	0.8	18.0	0.9	21.1	1.0	21.5	1.0	24.0	1.1
	91.4	10.6	0.7	12.9	0.8	15.0	0.9	18.0	1.0	21.1	1.0	21.5	1.0	24.0	1.1
	95	10.6	0.8	12.9	0.9	15.0	1.0	18.0	1.1	21.1	1.2	21.5	1.1	24.0	1.2
	98.6	10.6	0.9	12.9	1.0	15.0	1.1	18.0	1.2	21.1	1.3	21.5	1.2	24.0	1.4
	102.2	10.6	0.9	12.9	1.1	15.0	1.2	18.0	1.3	21.1	1.4	21.5	1.4	24.0	1.5
	105.8	10.6	1.0	12.9	1.2	15.0	1.3	18.0	1.4	21.1	1.6	21.5	1.5	24.0	1.7
	109.4	10.6	1.1	12.9	1.3	15.0	1.4	18.0	1.5	21.1	1.7	21.5	1.7	24.0	1.9
	113	10.6	1.2	12.9	1.4	15.0	1.5	18.0	1.7	21.1	1.9	21.5	1.8	24.0	2.1
	118.4	10.6	1.4	12.9	1.6	15.0	1.7	18.0	1.9	21.1	2.2	21.5	2.1	24.0	2.4
	122	10.6	1.5	12.9	1.7	15.0	1.9	18.0	2.1	21.1	2.4	21.5	2.3	24.0	2.6
	125	10.6	1.7	12.9	1.9	15.0	2.1	18.0	2.3	21.1	2.6	21.5	2.6	24.0	2.8

LEGEND:
CR: Combination ratio
TC: Total capacity (kBtu/h)
PI: Power input (compressor + outdoor fan motor) (kBtu/h)

NOTE:
Shaded cells indicate rating condition.

Table 16 — 4 Ton Capacity

CR	Outdoor Air Temperature (° F DB/WB)	4 Ton Cooling Capacity - Indoor Air Temperature (°F DB/WB)													
		67		71		75		80		85		87		90	
		57		60		63		67		71		72		75	
		TC	PI	TC	PI	TC	PI	TC	PI	TC	PI	TC	PI	TC	PI
130%	5	36.8	1.4	44.7	1.8	52.2	2.2	62.4	2.7	73.1	3.3	74.5	3.4	83.4	3.8
	10.4	36.8	1.4	44.7	1.8	52.2	2.2	62.4	2.7	73.1	3.3	74.5	3.4	83.4	3.8
	14	36.8	1.4	44.7	1.8	52.2	2.2	62.4	2.7	73.1	3.3	74.5	3.4	83.4	3.8
	17.6	36.8	1.5	44.7	1.8	52.2	2.2	62.4	2.8	73.1	3.3	74.5	3.4	83.4	3.8
	23	36.8	1.5	44.7	1.9	52.2	2.2	62.4	2.8	73.1	3.3	74.5	3.4	83.4	3.8
	28.4	36.8	1.5	44.7	1.9	52.2	2.3	62.4	2.8	73.1	3.3	74.5	3.4	83.4	3.8
	32	36.8	1.5	44.7	1.9	52.2	2.3	62.4	2.8	73.1	3.3	74.5	3.4	83.4	3.8
	35.6	36.8	1.5	44.7	1.9	52.2	2.3	62.4	2.8	73.1	3.3	74.5	3.4	83.4	3.8
	39.2	36.8	1.5	44.7	1.9	52.2	2.3	62.4	2.8	73.1	3.3	74.5	3.4	83.4	3.9
	42.8	36.8	1.5	44.7	1.9	52.2	2.3	62.4	2.8	73.1	3.3	74.5	3.4	83.4	3.9
	46.4	36.8	1.6	44.7	2.0	52.2	2.3	62.4	2.8	73.1	3.4	74.5	3.5	83.4	4.0
	50	36.8	1.6	44.7	2.0	52.2	2.3	62.4	2.8	73.1	3.4	74.5	3.6	83.4	4.1
	53.6	36.8	1.6	44.7	2.0	52.2	2.3	62.4	2.9	73.1	3.5	74.5	3.6	83.4	4.4
	57.2	36.8	1.7	44.7	2.0	52.2	2.4	62.4	3.0	73.1	3.8	74.5	3.7	83.4	4.8
	60.8	36.8	1.7	44.7	2.0	52.2	2.4	62.4	3.1	73.1	4.1	74.5	4.1	83.4	5.3
	64.4	36.8	1.7	44.7	2.1	52.2	2.6	62.4	3.4	73.1	4.5	74.5	4.5	83.4	5.8
	68	36.8	1.7	44.7	2.3	52.2	2.8	62.4	3.7	73.1	4.9	74.5	4.9	83.4	6.3
	73.4	36.8	2.0	44.7	2.6	52.2	3.2	62.4	4.2	73.1	5.6	74.5	5.5	79.9	6.5
	77	36.8	2.2	44.7	2.8	52.2	3.5	62.4	4.6	73.1	6.0	74.5	6.0	77.6	6.5
	80.6	36.8	2.4	44.7	3.1	52.2	3.8	62.4	5.0	73.1	6.5	74.5	6.5	75.5	6.5
	84.2	36.8	2.6	44.7	3.3	52.2	4.1	62.4	5.4	70.0	6.5	71.5	6.5	73.1	6.5
	87.8	36.8	2.8	44.7	3.6	52.2	4.4	62.4	5.8	67.8	6.5	69.3	6.5	70.9	6.5
	91.4	36.8	3.0	44.7	3.9	52.2	4.8	62.4	6.3	65.6	6.5	67.2	6.5	68.9	6.5
	95	36.8	3.3	44.7	4.2	52.2	5.2	60.6	6.5	63.5	6.5	64.8	6.5	66.6	6.5
	98.6	36.8	3.6	44.7	4.5	52.2	5.6	58.4	6.5	61.3	6.5	62.6	6.5	64.2	6.5
	102.2	36.8	3.8	44.7	4.9	52.2	6.0	56.2	6.5	59.1	6.5	60.5	6.5	61.9	6.5
	105.8	36.8	4.1	44.7	5.3	52.2	6.5	54.2	6.5	57.1	6.5	58.2	6.5	60.1	6.6
	109.4	36.8	4.5	44.7	5.7	49.2	6.5	52.0	6.5	54.8	6.5	55.9	6.5	57.6	6.6
	113	36.8	4.8	44.7	6.2	47.2	6.5	49.9	6.5	52.5	6.5	54.1	6.6	55.4	6.5
	118.4	36.8	5.4	42.1	6.5	44.1	6.5	47.0	6.6	48.5	6.3	48.5	6.0	49.0	5.7
	122	36.8	5.9	39.9	6.4	40.9	6.1	41.8	5.7	43.0	5.5	43.1	5.3	42.8	4.9
	125	33.3	5.5	33.8	5.3	34.8	5.1	35.1	4.7	35.7	4.4	36.9	4.4	36.1	4.0
120%	5	34.0	1.3	41.3	1.6	48.1	2.0	57.6	2.5	67.5	3.0	68.8	3.1	76.9	3.5
	10.4	34.0	1.3	41.3	1.6	48.1	2.0	57.6	2.5	67.5	3.0	68.8	3.1	76.9	3.5
	14	34.0	1.3	41.3	1.6	48.1	2.0	57.6	2.5	67.5	3.0	68.8	3.1	76.9	3.5
	17.6	34.0	1.3	41.3	1.6	48.1	2.0	57.6	2.5	67.5	3.0	68.8	3.1	76.9	3.5
	23	34.0	1.3	41.3	1.7	48.1	2.0	57.6	2.5	67.5	3.0	68.8	3.1	76.9	3.5
	28.4	34.0	1.4	41.3	1.7	48.1	2.0	57.6	2.5	67.5	3.0	68.8	3.1	76.9	3.5
	32	34.0	1.4	41.3	1.7	48.1	2.1	57.6	2.5	67.5	3.0	68.8	3.1	76.9	3.5
	35.6	34.0	1.4	41.3	1.7	48.1	2.1	57.6	2.6	67.5	3.0	68.8	3.1	76.9	3.5
	39.2	34.0	1.4	41.3	1.7	48.1	2.1	57.6	2.6	67.5	3.0	68.8	3.1	76.9	3.5
	42.8	34.0	1.4	41.3	1.7	48.1	2.1	57.6	2.6	67.5	3.1	68.8	3.2	76.9	3.6
	46.4	34.0	1.4	41.3	1.8	48.1	2.1	57.6	2.6	67.5	3.1	68.8	3.2	76.9	3.6
	50	34.0	1.5	41.3	1.8	48.1	2.1	57.6	2.6	67.5	3.1	68.8	3.3	76.9	3.7
	53.6	34.0	1.5	41.3	1.8	48.1	2.1	57.6	2.6	67.5	3.2	68.8	3.3	76.9	3.8
	57.2	34.0	1.5	41.3	1.8	48.1	2.1	57.6	2.7	67.5	3.3	68.8	3.4	76.9	3.9
	60.8	34.0	1.5	41.3	1.9	48.1	2.2	57.6	2.8	67.5	3.4	68.8	3.4	76.9	4.3
	64.4	34.0	1.5	41.3	1.9	48.1	2.3	57.6	2.9	67.5	3.7	68.8	3.7	76.9	4.7
	68	34.0	1.5	41.3	1.9	48.1	2.4	57.6	3.1	67.5	4.1	68.8	4.0	76.9	5.2
	73.4	34.0	1.7	41.3	2.2	48.1	2.7	57.6	3.6	67.5	4.7	68.8	4.6	76.9	5.8
	77	34.0	1.9	41.3	2.4	48.1	3.0	57.6	3.9	67.5	5.1	68.8	5.0	76.9	6.3
	80.6	34.0	2.1	41.3	2.6	48.1	3.2	57.6	4.2	67.5	5.5	68.8	5.4	74.7	6.5
	84.2	34.0	2.3	41.3	2.9	48.1	3.5	57.6	4.6	67.5	5.9	68.8	5.8	72.5	6.5
	87.8	34.0	2.5	41.3	3.1	48.1	3.8	57.6	5.0	67.5	6.4	68.8	6.3	70.3	6.5
	91.4	34.0	2.7	41.3	3.4	48.1	4.1	57.6	5.3	65.0	6.5	66.5	6.5	68.1	6.5
	95	34.0	2.9	41.3	3.7	48.1	4.5	57.6	5.8	62.9	6.5	64.3	6.5	65.8	6.5
	98.6	34.0	3.2	41.3	4.0	48.1	4.8	57.6	6.2	60.8	6.5	62.2	6.5	63.8	6.5
	102.2	34.0	3.4	41.3	4.3	48.1	5.2	55.8	6.5	58.5	6.5	59.9	6.5	61.5	6.5
	105.8	34.0	3.7	41.3	4.6	48.1	5.7	53.7	6.5	56.5	6.5	57.6	6.5	59.5	6.5
	109.4	34.0	4.0	41.3	5.0	48.1	6.1	51.5	6.5	54.3	6.5	55.6	6.5	57.2	6.5
	113	34.0	4.3	41.3	5.4	46.8	6.5	49.4	6.5	52.0	6.5	53.6	6.5	54.8	6.5
	118.4	34.0	4.9	41.3	6.2	43.7	6.5	46.4	6.5	48.1	6.3	48.6	6.1	49.7	6.0
	122	34.0	5.3	39.8	6.5	40.6	6.1	41.5	5.7	42.0	5.3	42.2	5.1	43.1	5.0
	125	34.0	5.7	33.8	5.3	34.6	5.1	35.4	4.8	36.1	4.5	35.9	4.3	38.0	4.4

Manufacturer reserves the right to change, at any time, specifications and designs without notice and without obligations.

CR	Outdoor Air Temperature (° F DB/WB)	4 Ton Cooling Capacity - Indoor Air Temperature (°F DB/WB)													
		67		71		75		80		85		87		90	
		57		60		63		67		71		72		75	
		TC	PI	TC	PI	TC	PI	TC	PI	TC	PI	TC	PI	TC	PI
110%	5	31.1	1.2	37.8	1.5	44.1	1.8	52.8	2.3	61.9	2.8	63.0	2.8	70.5	3.2
	10.4	31.1	1.2	37.8	1.5	44.1	1.8	52.8	2.3	61.9	2.8	63.0	2.8	70.5	3.2
	14	31.1	1.2	37.8	1.5	44.1	1.9	52.8	2.3	61.9	2.8	63.0	2.9	70.5	3.2
	17.6	31.1	1.2	37.8	1.5	44.1	1.9	52.8	2.3	61.9	2.8	63.0	2.9	70.5	3.2
	23	31.1	1.2	37.8	1.5	44.1	1.9	52.8	2.3	61.9	2.8	63.0	2.9	70.5	3.2
	28.4	31.1	1.2	37.8	1.5	44.1	1.9	52.8	2.3	61.9	2.8	63.0	2.9	70.5	3.2
	32	31.1	1.2	37.8	1.5	44.1	1.9	52.8	2.3	61.9	2.8	63.0	2.9	70.5	3.2
	35.6	31.1	1.2	37.8	1.5	44.1	1.9	52.8	2.3	61.9	2.8	63.0	2.9	70.5	3.2
	39.2	31.1	1.2	37.8	1.5	44.1	1.9	52.8	2.3	61.9	2.8	63.0	2.9	70.5	3.2
	42.8	31.1	1.3	37.8	1.6	44.1	1.9	52.8	2.3	61.9	2.8	63.0	2.9	70.5	3.2
	46.4	31.1	1.3	37.8	1.6	44.1	1.9	52.8	2.4	61.9	2.8	63.0	2.9	70.5	3.3
	50	31.1	1.3	37.8	1.6	44.1	2.0	52.8	2.4	61.9	2.9	63.0	2.9	70.5	3.4
	53.6	31.1	1.3	37.8	1.7	44.1	2.0	52.8	2.4	61.9	2.9	63.0	3.0	70.5	3.4
	57.2	31.1	1.4	37.8	1.7	44.1	2.0	52.8	2.5	61.9	3.0	63.0	3.1	70.5	3.4
	60.8	31.1	1.4	37.8	1.7	44.1	2.0	52.8	2.5	61.9	3.0	63.0	3.1	70.5	3.5
	64.4	31.1	1.4	37.8	1.7	44.1	2.1	52.8	2.6	61.9	3.1	63.0	3.1	70.5	3.8
	68	31.1	1.4	37.8	1.7	44.1	2.1	52.8	2.6	61.9	3.3	63.0	3.3	70.5	4.1
	73.4	31.1	1.5	37.8	1.9	44.1	2.3	52.8	3.0	61.9	3.8	63.0	3.8	70.5	4.7
	77	31.1	1.7	37.8	2.1	44.1	2.5	52.8	3.2	61.9	4.2	63.0	4.1	70.5	5.1
	80.6	31.1	1.8	37.8	2.3	44.1	2.8	52.8	3.5	61.9	4.5	63.0	4.5	70.5	5.6
	84.2	31.1	2.0	37.8	2.5	44.1	3.0	52.8	3.8	61.9	4.9	63.0	4.8	70.5	6.0
	87.8	31.1	2.2	37.8	2.7	44.1	3.3	52.8	4.2	61.9	5.3	63.0	5.2	70.5	6.5
	91.4	31.1	2.4	37.8	3.0	44.1	3.5	52.8	4.5	61.9	5.8	63.0	5.7	67.4	6.5
	95	31.1	2.6	37.8	3.2	44.1	3.8	52.8	4.9	61.9	6.2	63.0	6.2	65.3	6.5
	98.6	31.1	2.8	37.8	3.5	44.1	4.2	52.8	5.3	60.1	6.5	61.5	6.5	63.0	6.5
	102.2	31.1	3.0	37.8	3.8	44.1	4.5	52.8	5.7	58.0	6.5	59.4	6.5	60.8	6.5
	105.8	31.1	3.3	37.8	4.1	44.1	4.9	52.8	6.2	55.9	6.5	57.2	6.5	58.8	6.5
	109.4	31.1	3.5	37.8	4.4	44.1	5.3	51.1	6.5	53.6	6.5	54.9	6.5	56.5	6.5
	113	31.1	3.8	37.8	4.8	44.1	5.8	49.0	6.5	51.7	6.5	52.9	6.5	54.2	6.5
	118.4	31.1	4.3	37.8	5.4	44.1	6.6	45.9	6.5	48.1	6.4	48.5	6.2	49.6	6.1
	122	31.1	4.7	37.8	5.8	40.4	6.2	41.6	5.8	42.2	5.4	43.0	5.4	43.3	5.1
	125	31.1	5.1	33.7	5.3	34.3	5.1	35.7	4.9	36.4	4.6	36.3	4.4	37.0	4.3
100%	5	28.3	1.1	34.4	1.3	40.1	1.6	48.0	2.1	56.2	2.5	57.3	2.6	64.1	2.8
	10.4	28.3	1.1	34.4	1.3	40.1	1.7	48.0	2.1	56.2	2.5	57.3	2.6	64.1	2.9
	14	28.3	1.1	34.4	1.3	40.1	1.7	48.0	2.1	56.2	2.5	57.3	2.6	64.1	2.9
	17.6	28.3	1.1	34.4	1.3	40.1	1.7	48.0	2.1	56.2	2.5	57.3	2.6	64.1	2.9
	23	28.3	1.1	34.4	1.3	40.1	1.7	48.0	2.1	56.2	2.5	57.3	2.6	64.1	2.9
	28.4	28.3	1.1	34.4	1.4	40.1	1.7	48.0	2.1	56.2	2.5	57.3	2.6	64.1	2.9
	32	28.3	1.1	34.4	1.4	40.1	1.7	48.0	2.1	56.2	2.5	57.3	2.6	64.1	2.9
	35.6	28.3	1.1	34.4	1.4	40.1	1.7	48.0	2.1	56.2	2.5	57.3	2.6	64.1	2.9
	39.2	28.3	1.1	34.4	1.4	40.1	1.7	48.0	2.1	56.2	2.5	57.3	2.6	64.1	2.9
	42.8	28.3	1.2	34.4	1.4	40.1	1.7	48.0	2.1	56.2	2.5	57.3	2.6	64.1	3.0
	46.4	28.3	1.2	34.4	1.4	40.1	1.8	48.0	2.2	56.2	2.6	57.3	2.7	64.1	3.0
	50	28.3	1.2	34.4	1.5	40.1	1.8	48.0	2.2	56.2	2.6	57.3	2.7	64.1	3.1
	53.6	28.3	1.2	34.4	1.5	40.1	1.8	48.0	2.2	56.2	2.6	57.3	2.8	64.1	3.1
	57.2	28.3	1.2	34.4	1.5	40.1	1.8	48.0	2.2	56.2	2.7	57.3	2.8	64.1	3.1
	60.8	28.3	1.2	34.4	1.5	40.1	1.8	48.0	2.3	56.2	2.7	57.3	2.8	64.1	3.1
	64.4	28.3	1.2	34.4	1.5	40.1	1.9	48.0	2.3	56.2	2.7	57.3	2.8	64.1	3.2
	68	28.3	1.3	34.4	1.5	40.1	1.9	48.0	2.3	56.2	2.8	57.3	2.8	64.1	3.3
	73.4	28.3	1.3	34.4	1.6	40.1	1.9	48.0	2.5	56.2	3.1	57.3	3.0	64.1	3.8
	77	28.3	1.5	34.4	1.7	40.1	2.1	48.0	2.7	56.2	3.4	57.3	3.3	64.1	4.1
	80.6	28.3	1.6	34.4	1.9	40.1	2.3	48.0	2.9	56.2	3.7	57.3	3.6	64.1	4.5
	84.2	28.3	1.8	34.4	2.1	40.1	2.6	48.0	3.2	56.2	4.0	57.3	3.9	64.1	4.9
	87.8	28.3	1.9	34.4	2.3	40.1	2.8	48.0	3.5	56.2	4.4	57.3	4.3	64.1	5.3
	91.4	28.3	2.1	34.4	2.5	40.1	3.0	48.0	3.8	56.2	4.7	57.3	4.7	64.1	5.7
	95	28.3	2.2	34.4	2.8	40.1	3.3	48.0	4.1	56.2	5.1	57.3	5.1	64.1	6.2
	98.6	28.3	2.4	34.4	3.0	40.1	3.6	48.0	4.4	56.2	5.6	57.3	5.5	62.3	6.5
	102.2	28.3	2.6	34.4	3.3	40.1	3.9	48.0	4.8	56.2	6.0	57.3	6.0	60.2	6.5
	105.8	28.3	2.9	34.4	3.5	40.1	4.2	48.0	5.2	56.2	6.6	57.3	6.5	58.0	6.5
	109.4	28.3	3.1	34.4	3.8	40.1	4.5	48.0	5.7	53.1	6.5	54.3	6.5	55.9	6.5
	113	28.3	3.4	34.4	4.2	40.1	4.9	48.0	6.2	51.0	6.5	52.2	6.5	53.7	6.5
	118.4	28.3	3.8	34.4	4.7	40.1	5.6	45.4	6.5	48.0	6.5	48.2	6.2	49.0	6.1
	122	28.3	4.1	34.4	5.1	40.1	6.1	41.1	5.8	41.7	5.4	42.4	5.3	42.8	5.1
	125	28.3	4.5	34.4	5.5	34.2	5.1	34.8	4.8	35.4	4.5	36.6	4.5	35.9	4.2

Manufacturer reserves the right to change, at any time, specifications and designs without notice and without obligations.

CR	Outdoor Air Temperature (° F DB/WB)	4 Ton Cooling Capacity - Indoor Air Temperature (°F DB/WB)													
		67		71		75		80		85		87		90	
		57		60		63		67		71		72		75	
		TC	PI	TC	PI	TC	PI	TC	PI	TC	PI	TC	PI	TC	PI
90	5	25.5	1.0	30.9	1.2	36.1	1.5	43.2	1.9	50.6	2.2	51.6	2.3	57.7	2.6
	10.4	25.5	1.0	30.9	1.2	36.1	1.5	43.2	1.9	50.6	2.2	51.6	2.3	57.7	2.6
	14	25.5	1.0	30.9	1.2	36.1	1.5	43.2	1.9	50.6	2.2	51.6	2.3	57.7	2.6
	17.6	25.5	1.0	30.9	1.2	36.1	1.5	43.2	1.9	50.6	2.2	51.6	2.3	57.7	2.6
	23	25.5	1.0	30.9	1.2	36.1	1.5	43.2	1.9	50.6	2.2	51.6	2.3	57.7	2.6
	28.4	25.5	1.0	30.9	1.2	36.1	1.5	43.2	1.9	50.6	2.3	51.6	2.3	57.7	2.6
	32	25.5	1.0	30.9	1.2	36.1	1.5	43.2	1.9	50.6	2.3	51.6	2.3	57.7	2.6
	35.6	25.5	1.0	30.9	1.2	36.1	1.5	43.2	1.9	50.6	2.3	51.6	2.3	57.7	2.6
	39.2	25.5	1.0	30.9	1.3	36.1	1.5	43.2	1.9	50.6	2.3	51.6	2.3	57.7	2.6
	42.8	25.5	1.1	30.9	1.3	36.1	1.5	43.2	1.9	50.6	2.3	51.6	2.4	57.7	2.7
	46.4	25.5	1.1	30.9	1.3	36.1	1.5	43.2	1.9	50.6	2.3	51.6	2.4	57.7	2.7
	50	25.5	1.1	30.9	1.3	36.1	1.6	43.2	1.9	50.6	2.3	51.6	2.4	57.7	2.7
	53.6	25.5	1.1	30.9	1.3	36.1	1.6	43.2	1.9	50.6	2.4	51.6	2.4	57.7	2.7
	57.2	25.5	1.1	30.9	1.3	36.1	1.6	43.2	2.0	50.6	2.4	51.6	2.5	57.7	2.8
	60.8	25.5	1.1	30.9	1.4	36.1	1.6	43.2	2.0	50.6	2.4	51.6	2.5	57.7	2.8
	64.4	25.5	1.1	30.9	1.4	36.1	1.6	43.2	2.0	50.6	2.4	51.6	2.5	57.7	2.8
	68	25.5	1.1	30.9	1.4	36.1	1.6	43.2	2.0	50.6	2.5	51.6	2.5	57.7	2.8
	73.4	25.5	1.1	30.9	1.4	36.1	1.7	43.2	2.1	50.6	2.5	51.6	2.6	57.7	3.0
	77	25.5	1.3	30.9	1.5	36.1	1.7	43.2	2.2	50.6	2.7	51.6	2.6	57.7	3.3
	80.6	25.5	1.4	30.9	1.7	36.1	1.9	43.2	2.4	50.6	3.0	51.6	2.9	57.7	3.5
	84.2	25.5	1.6	30.9	1.8	36.1	2.1	43.2	2.6	50.6	3.3	51.6	3.2	57.7	3.9
	87.8	25.5	1.7	30.9	2.0	36.1	2.3	43.2	2.9	50.6	3.6	51.6	3.5	57.7	4.2
	91.4	25.5	1.8	30.9	2.2	36.1	2.6	43.2	3.2	50.6	3.9	51.6	3.8	57.7	4.6
	95	25.5	2.0	30.9	2.4	36.1	2.8	43.2	3.4	50.6	4.2	51.6	4.1	57.7	5.0
	98.6	25.5	2.2	30.9	2.6	36.1	3.0	43.2	3.7	50.6	4.6	51.6	4.5	57.7	5.5
	102.2	25.5	2.3	30.9	2.8	36.1	3.3	43.2	4.1	50.6	5.0	51.6	4.9	57.7	5.9
	105.8	25.5	2.5	30.9	3.0	36.1	3.6	43.2	4.4	50.6	5.4	51.6	5.3	57.7	6.4
	109.4	25.5	2.7	30.9	3.3	36.1	3.9	43.2	4.8	50.6	5.9	51.6	5.8	55.0	6.5
	113	25.5	3.0	30.9	3.6	36.1	4.2	43.2	5.2	50.6	6.4	51.6	6.3	52.9	6.5
	118.4	25.5	3.3	30.9	4.1	36.1	4.8	43.2	5.9	47.3	6.5	48.0	6.4	48.5	6.1
	122	25.5	3.6	30.9	4.4	36.1	5.2	40.9	5.9	41.6	5.5	42.1	5.4	42.7	5.2
	125	25.5	3.9	30.9	4.8	34.1	5.2	34.9	4.9	35.6	4.6	36.1	4.5	36.8	4.4
80%	5	22.6	0.9	27.5	1.1	32.1	1.3	38.4	1.6	45.0	1.9	45.9	2.0	51.3	2.3
	10.4	22.6	0.9	27.5	1.1	32.1	1.3	38.4	1.6	45.0	2.0	45.9	2.0	51.3	2.3
	14	22.6	0.9	27.5	1.1	32.1	1.3	38.4	1.6	45.0	2.0	45.9	2.1	51.3	2.3
	17.6	22.6	0.9	27.5	1.1	32.1	1.3	38.4	1.6	45.0	2.0	45.9	2.1	51.3	2.3
	23	22.6	0.9	27.5	1.1	32.1	1.3	38.4	1.7	45.0	2.0	45.9	2.1	51.3	2.3
	28.4	22.6	0.9	27.5	1.1	32.1	1.3	38.4	1.7	45.0	2.0	45.9	2.1	51.3	2.3
	32	22.6	0.9	27.5	1.1	32.1	1.4	38.4	1.7	45.0	2.0	45.9	2.1	51.3	2.3
	35.6	22.6	0.9	27.5	1.1	32.1	1.4	38.4	1.7	45.0	2.0	45.9	2.1	51.3	2.4
	39.2	22.6	0.9	27.5	1.1	32.1	1.4	38.4	1.7	45.0	2.0	45.9	2.1	51.3	2.4
	42.8	22.6	0.9	27.5	1.1	32.1	1.4	38.4	1.7	45.0	2.1	45.9	2.1	51.3	2.4
	46.4	22.6	1.0	27.5	1.2	32.1	1.4	38.4	1.7	45.0	2.1	45.9	2.1	51.3	2.4
	50	22.6	1.0	27.5	1.2	32.1	1.4	38.4	1.7	45.0	2.1	45.9	2.1	51.3	2.4
	53.6	22.6	1.0	27.5	1.2	32.1	1.4	38.4	1.7	45.0	2.1	45.9	2.1	51.3	2.4
	57.2	22.6	1.0	27.5	1.2	32.1	1.4	38.4	1.8	45.0	2.1	45.9	2.2	51.3	2.4
	60.8	22.6	1.0	27.5	1.2	32.1	1.4	38.4	1.8	45.0	2.1	45.9	2.2	51.3	2.4
	64.4	22.6	1.0	27.5	1.2	32.1	1.4	38.4	1.8	45.0	2.1	45.9	2.2	51.3	2.5
	68	22.6	1.0	27.5	1.3	32.1	1.4	38.4	1.8	45.0	2.1	45.9	2.2	51.3	2.5
	73.4	22.6	1.0	27.5	1.3	32.1	1.5	38.4	1.8	45.0	2.2	45.9	2.2	51.3	2.5
	77	22.6	1.1	27.5	1.3	32.1	1.5	38.4	1.8	45.0	2.2	45.9	2.3	51.3	2.5
	80.6	22.6	1.2	27.5	1.4	32.1	1.6	38.4	1.9	45.0	2.4	45.9	2.3	51.3	2.8
	84.2	22.6	1.4	27.5	1.6	32.1	1.8	38.4	2.1	45.0	2.6	45.9	2.5	51.3	3.1
	87.8	22.6	1.5	27.5	1.7	32.1	1.9	38.4	2.3	45.0	2.9	45.9	2.8	51.3	3.4
	91.4	22.6	1.6	27.5	1.9	32.1	2.1	38.4	2.6	45.0	3.1	45.9	3.1	51.3	3.7
	95	22.6	1.7	27.5	2.0	32.1	2.3	38.4	2.8	45.0	3.4	45.9	3.3	51.3	4.0
	98.6	22.6	1.9	27.5	2.2	32.1	2.5	38.4	3.1	45.0	3.7	45.9	3.7	51.3	4.3
	102.2	22.6	2.1	27.5	2.4	32.1	2.8	38.4	3.4	45.0	4.1	45.9	4.0	51.3	4.7
	105.8	22.6	2.2	27.5	2.6	32.1	3.0	38.4	3.7	45.0	4.4	45.9	4.3	51.3	5.1
	109.4	22.6	2.4	27.5	2.8	32.1	3.3	38.4	4.0	45.0	4.8	45.9	4.7	51.3	5.6
	113	22.6	2.6	27.5	3.1	32.1	3.6	38.4	4.3	45.0	5.2	45.9	5.1	51.3	6.1
	118.4	22.6	2.9	27.5	3.5	32.1	4.0	38.4	4.9	45.0	5.9	45.9	5.8	48.2	6.3
	122	22.6	3.2	27.5	3.8	32.1	4.4	38.4	5.3	41.5	5.6	41.8	5.4	42.3	5.3
	125	22.6	3.4	27.5	4.1	32.1	4.8	34.6	4.9	35.6	4.7	35.6	4.5	36.2	4.4

Manufacturer reserves the right to change, at any time, specifications and designs without notice and without obligations.

CR	Outdoor Air Temperature (° F DB/WB)	4 Ton Cooling Capacity - Indoor Air Temperature (°F DB/WB)													
		67		71		75		80		85		87		90	
		57		60		63		67		71		72		75	
		TC	PI	TC	PI	TC	PI	TC	PI	TC	PI	TC	PI	TC	PI
70%	5	19.8	0.8	24.1	0.9	28.1	1.1	33.6	1.4	39.4	1.7	40.1	1.7	44.9	2.0
	10.4	19.8	0.8	24.1	0.9	28.1	1.1	33.6	1.4	39.4	1.7	40.1	1.7	44.9	2.0
	14	19.8	0.8	24.1	0.9	28.1	1.1	33.6	1.4	39.4	1.7	40.1	1.8	44.9	2.0
	17.6	19.8	0.8	24.1	0.9	28.1	1.1	33.6	1.4	39.4	1.7	40.1	1.8	44.9	2.0
	23	19.8	0.8	24.1	0.9	28.1	1.2	33.6	1.4	39.4	1.7	40.1	1.8	44.9	2.0
	28.4	19.8	0.8	24.1	0.9	28.1	1.2	33.6	1.4	39.4	1.7	40.1	1.8	44.9	2.0
	32	19.8	0.8	24.1	1.0	28.1	1.2	33.6	1.5	39.4	1.7	40.1	1.8	44.9	2.0
	35.6	19.8	0.8	24.1	1.0	28.1	1.2	33.6	1.5	39.4	1.8	40.1	1.8	44.9	2.1
	39.2	19.8	0.8	24.1	1.0	28.1	1.2	33.6	1.5	39.4	1.8	40.1	1.8	44.9	2.1
	42.8	19.8	0.8	24.1	1.0	28.1	1.2	33.6	1.5	39.4	1.8	40.1	1.8	44.9	2.1
	46.4	19.8	0.8	24.1	1.0	28.1	1.2	33.6	1.5	39.4	1.8	40.1	1.8	44.9	2.1
	50	19.8	0.8	24.1	1.0	28.1	1.3	33.6	1.5	39.4	1.8	40.1	1.8	44.9	2.1
	53.6	19.8	0.8	24.1	1.0	28.1	1.3	33.6	1.5	39.4	1.8	40.1	1.8	44.9	2.1
	57.2	19.8	0.9	24.1	1.0	28.1	1.3	33.6	1.5	39.4	1.8	40.1	1.8	44.9	2.1
	60.8	19.8	0.9	24.1	1.0	28.1	1.3	33.6	1.5	39.4	1.8	40.1	1.9	44.9	2.1
	64.4	19.8	0.9	24.1	1.1	28.1	1.3	33.6	1.5	39.4	1.9	40.1	1.9	44.9	2.1
	68	19.8	0.9	24.1	1.1	28.1	1.3	33.6	1.6	39.4	1.9	40.1	1.9	44.9	2.1
	73.4	19.8	0.9	24.1	1.1	28.1	1.3	33.6	1.6	39.4	1.9	40.1	1.9	44.9	2.2
	77	19.8	1.0	24.1	1.1	28.1	1.3	33.6	1.6	39.4	1.9	40.1	1.9	44.9	2.2
	80.6	19.8	1.1	24.1	1.2	28.1	1.4	33.6	1.6	39.4	1.9	40.1	1.9	44.9	2.2
	84.2	19.8	1.2	24.1	1.4	28.1	1.5	33.6	1.7	39.4	2.0	40.1	2.0	44.9	2.3
	87.8	19.8	1.3	24.1	1.5	28.1	1.6	33.6	1.9	39.4	2.2	40.1	2.2	44.9	2.6
	91.4	19.8	1.4	24.1	1.6	28.1	1.8	33.6	2.1	39.4	2.5	40.1	2.4	44.9	2.8
	95	19.8	1.5	24.1	1.8	28.1	2.0	33.6	2.3	39.4	2.7	40.1	2.6	44.9	3.1
	98.6	19.8	1.6	24.1	1.9	28.1	2.1	33.6	2.5	39.4	3.0	40.1	2.9	44.9	3.4
	102.2	19.8	1.8	24.1	2.1	28.1	2.3	33.6	2.7	39.4	3.3	40.1	3.2	44.9	3.7
	105.8	19.8	1.9	24.1	2.2	28.1	2.5	33.6	3.0	39.4	3.6	40.1	3.5	44.9	4.1
	109.4	19.8	2.1	24.1	2.4	28.1	2.7	33.6	3.3	39.4	3.9	40.1	3.8	44.9	4.5
	113	19.8	2.3	24.1	2.6	28.1	3.0	33.6	3.6	39.4	4.2	40.1	4.2	44.9	4.9
	118.4	19.8	2.5	24.1	3.0	28.1	3.4	33.6	4.0	39.4	4.8	40.1	4.7	44.9	5.5
	122	19.8	2.8	24.1	3.2	28.1	3.7	33.6	4.4	39.4	5.2	40.1	5.2	42.0	5.4
	125	19.8	3.0	24.1	3.5	28.1	4.0	33.6	4.8	35.2	4.8	35.4	4.6	36.1	4.5
60%	5	17.0	0.7	20.6	0.8	24.1	0.9	28.8	1.2	33.7	1.4	34.4	1.5	38.5	1.7
	10.4	17.0	0.7	20.6	0.8	24.1	0.9	28.8	1.2	33.7	1.4	34.4	1.5	38.5	1.7
	14	17.0	0.7	20.6	0.8	24.1	0.9	28.8	1.2	33.7	1.4	34.4	1.5	38.5	1.7
	17.6	17.0	0.7	20.6	0.8	24.1	0.9	28.8	1.2	33.7	1.4	34.4	1.5	38.5	1.7
	23	17.0	0.7	20.6	0.8	24.1	0.9	28.8	1.2	33.7	1.4	34.4	1.5	38.5	1.7
	28.4	17.0	0.7	20.6	0.8	24.1	0.9	28.8	1.2	33.7	1.4	34.4	1.5	38.5	1.7
	32	17.0	0.7	20.6	0.8	24.1	1.0	28.8	1.3	33.7	1.5	34.4	1.5	38.5	1.7
	35.6	17.0	0.7	20.6	0.8	24.1	1.0	28.8	1.3	33.7	1.5	34.4	1.5	38.5	1.7
	39.2	17.0	0.7	20.6	0.8	24.1	1.0	28.8	1.3	33.7	1.5	34.4	1.5	38.5	1.7
	42.8	17.0	0.7	20.6	0.8	24.1	1.0	28.8	1.3	33.7	1.5	34.4	1.5	38.5	1.8
	46.4	17.0	0.7	20.6	0.9	24.1	1.0	28.8	1.3	33.7	1.5	34.4	1.5	38.5	1.8
	50	17.0	0.7	20.6	0.9	24.1	1.0	28.8	1.3	33.7	1.5	34.4	1.5	38.5	1.8
	53.6	17.0	0.7	20.6	0.9	24.1	1.0	28.8	1.3	33.7	1.5	34.4	1.5	38.5	1.8
	57.2	17.0	0.7	20.6	0.9	24.1	1.0	28.8	1.3	33.7	1.5	34.4	1.5	38.5	1.8
	60.8	17.0	0.7	20.6	0.9	24.1	1.1	28.8	1.3	33.7	1.5	34.4	1.6	38.5	1.8
	64.4	17.0	0.7	20.6	0.9	24.1	1.1	28.8	1.3	33.7	1.5	34.4	1.6	38.5	1.8
	68	17.0	0.7	20.6	0.9	24.1	1.1	28.8	1.3	33.7	1.6	34.4	1.6	38.5	1.8
	73.4	17.0	0.8	20.6	0.9	24.1	1.1	28.8	1.3	33.7	1.6	34.4	1.6	38.5	1.8
	77	17.0	0.9	20.6	1.0	24.1	1.1	28.8	1.3	33.7	1.6	34.4	1.6	38.5	1.9
	80.6	17.0	0.9	20.6	1.0	24.1	1.2	28.8	1.4	33.7	1.6	34.4	1.7	38.5	1.9
	84.2	17.0	1.0	20.6	1.1	24.1	1.3	28.8	1.4	33.7	1.6	34.4	1.7	38.5	1.9
	87.8	17.0	1.1	20.6	1.3	24.1	1.4	28.8	1.6	33.7	1.8	34.4	1.7	38.5	1.9
	91.4	17.0	1.2	20.6	1.4	24.1	1.5	28.8	1.7	33.7	1.9	34.4	1.9	38.5	2.1
	95	17.0	1.3	20.6	1.5	24.1	1.6	28.8	1.9	33.7	2.1	34.4	2.1	38.5	2.4
	98.6	17.0	1.4	20.6	1.6	24.1	1.8	28.8	2.0	33.7	2.3	34.4	2.3	38.5	2.6
	102.2	17.0	1.5	20.6	1.8	24.1	2.0	28.8	2.2	33.7	2.5	34.4	2.5	38.5	2.9
	105.8	17.0	1.7	20.6	1.9	24.1	2.1	28.8	2.4	33.7	2.8	34.4	2.7	38.5	3.2
	109.4	17.0	1.8	20.6	2.1	24.1	2.3	28.8	2.7	33.7	3.1	34.4	3.0	38.5	3.5
	113	17.0	1.9	20.6	2.2	24.1	2.5	28.8	2.9	33.7	3.4	34.4	3.3	38.5	3.8
	118.4	17.0	2.2	20.6	2.5	24.1	2.8	28.8	3.3	33.7	3.8	34.4	3.8	38.5	4.3
	122	17.0	2.4	20.6	2.7	24.1	3.1	28.8	3.6	33.7	4.2	34.4	4.1	38.5	4.7
	125	17.0	2.6	20.6	3.0	24.1	3.3	28.8	3.9	33.7	4.6	34.4	4.5	35.5	4.6

Manufacturer reserves the right to change, at any time, specifications and designs without notice and without obligations.

CR	Outdoor Air Temperature (° F DB/WB)	4 Ton Cooling Capacity - Indoor Air Temperature (°F DB/WB)													
		67		71		75		80		85		87		90	
		57		60		63		67		71		72		75	
		TC	PI	TC	PI	TC	PI	TC	PI	TC	PI	TC	PI	TC	PI
50%	5	14.1	0.6	17.2	0.7	20.1	0.8	24.0	0.9	28.1	1.2	28.7	1.2	32.1	1.4
	10.4	14.1	0.6	17.2	0.7	20.1	0.8	24.0	1.0	28.1	1.2	28.7	1.2	32.1	1.4
	14	14.1	0.6	17.2	0.7	20.1	0.8	24.0	1.0	28.1	1.2	28.7	1.2	32.1	1.4
	17.6	14.1	0.6	17.2	0.7	20.1	0.8	24.0	1.0	28.1	1.2	28.7	1.2	32.1	1.4
	23	14.1	0.6	17.2	0.7	20.1	0.8	24.0	1.0	28.1	1.2	28.7	1.2	32.1	1.4
	28.4	14.1	0.6	17.2	0.7	20.1	0.8	24.0	1.0	28.1	1.2	28.7	1.2	32.1	1.4
	32	14.1	0.6	17.2	0.7	20.1	0.8	24.0	1.0	28.1	1.2	28.7	1.2	32.1	1.4
	35.6	14.1	0.6	17.2	0.7	20.1	0.8	24.0	1.0	28.1	1.2	28.7	1.2	32.1	1.4
	39.2	14.1	0.6	17.2	0.7	20.1	0.8	24.0	1.0	28.1	1.2	28.7	1.3	32.1	1.4
	42.8	14.1	0.6	17.2	0.7	20.1	0.8	24.0	1.0	28.1	1.2	28.7	1.3	32.1	1.4
	46.4	14.1	0.6	17.2	0.7	20.1	0.8	24.0	1.0	28.1	1.2	28.7	1.3	32.1	1.4
	50	14.1	0.6	17.2	0.7	20.1	0.8	24.0	1.0	28.1	1.2	28.7	1.3	32.1	1.4
	53.6	14.1	0.6	17.2	0.7	20.1	0.9	24.0	1.1	28.1	1.3	28.7	1.3	32.1	1.4
	57.2	14.1	0.6	17.2	0.7	20.1	0.9	24.0	1.1	28.1	1.3	28.7	1.3	32.1	1.4
	60.8	14.1	0.6	17.2	0.7	20.1	0.9	24.0	1.1	28.1	1.3	28.7	1.3	32.1	1.5
	64.4	14.1	0.6	17.2	0.7	20.1	0.9	24.0	1.1	28.1	1.3	28.7	1.3	32.1	1.5
	68	14.1	0.6	17.2	0.7	20.1	0.9	24.0	1.1	28.1	1.3	28.7	1.3	32.1	1.5
	73.4	14.1	0.6	17.2	0.8	20.1	0.9	24.0	1.1	28.1	1.3	28.7	1.3	32.1	1.5
	77	14.1	0.7	17.2	0.8	20.1	1.0	24.0	1.1	28.1	1.3	28.7	1.3	32.1	1.5
	80.6	14.1	0.8	17.2	0.9	20.1	1.0	24.0	1.2	28.1	1.4	28.7	1.4	32.1	1.5
	84.2	14.1	0.9	17.2	1.0	20.1	1.0	24.0	1.2	28.1	1.4	28.7	1.4	32.1	1.5
	87.8	14.1	0.9	17.2	1.0	20.1	1.1	24.0	1.3	28.1	1.4	28.7	1.4	32.1	1.6
	91.4	14.1	1.0	17.2	1.1	20.1	1.2	24.0	1.4	28.1	1.5	28.7	1.5	32.1	1.7
	95	14.1	1.1	17.2	1.2	20.1	1.4	24.0	1.5	28.1	1.7	28.7	1.6	32.1	1.8
	98.6	14.1	1.2	17.2	1.3	20.1	1.5	24.0	1.7	28.1	1.9	28.7	1.8	32.1	2.0
	102.2	14.1	1.3	17.2	1.5	20.1	1.6	24.0	1.8	28.1	2.0	28.7	2.0	32.1	2.2
	105.8	14.1	1.4	17.2	1.6	20.1	1.7	24.0	2.0	28.1	2.2	28.7	2.2	32.1	2.4
	109.4	14.1	1.5	17.2	1.7	20.1	1.9	24.0	2.1	28.1	2.4	28.7	2.4	32.1	2.7
	113	14.1	1.6	17.2	1.9	20.1	2.1	24.0	2.3	28.1	2.6	28.7	2.6	32.1	2.9
	118.4	14.1	1.9	17.2	2.1	20.1	2.3	24.0	2.7	28.1	3.0	28.7	2.9	32.1	3.3
	122	14.1	2.0	17.2	2.3	20.1	2.5	24.0	2.9	28.1	3.3	28.7	3.2	32.1	3.6
	125	14.1	2.2	17.2	2.5	20.1	2.8	24.0	3.1	28.1	3.6	28.7	3.5	32.1	4.0

LEGEND:
CR: Combination ratio
TC: Total capacity (kBtu/h)
PI: Power input (compressor + outdoor fan motor) (kBtu/h)

NOTE:
Shaded cells indicate rating condition.

Table 17 — 5 Ton Capacity

CR	Outdoor Air Temperature (°F DB/WB)	5 Ton Cooling Capacity - Indoor Air Temperature (°F DB/WB)													
		67		71		75		80		85		87		90	
		57		60		63		67		71		72		75	
		TC	PI	TC	PI	TC	PI	TC	PI	TC	PI	TC	PI	TC	PI
130%	5	46.0	2.1	55.9	2.7	65.2	3.1	78.0	3.8	91.4	4.4	93.1	4.5	97.1	4.4
	10.4	46.0	2.1	55.9	2.7	65.2	3.1	78.0	3.8	91.4	4.4	93.1	4.5	97.0	4.4
	14	46.0	2.1	55.9	2.7	65.2	3.1	78.0	3.8	91.4	4.5	93.1	4.6	96.9	4.4
	17.6	46.0	2.1	55.9	2.7	65.2	3.1	78.0	3.8	91.4	4.6	93.1	4.6	96.7	4.7
	23	46.0	2.1	55.9	2.7	65.2	3.1	78.0	3.8	91.4	4.6	93.1	4.6	96.0	4.5
	28.4	46.0	2.1	55.9	2.7	65.2	3.1	78.0	3.8	91.4	4.7	93.1	4.6	95.9	4.7
	32	46.0	2.1	55.9	2.7	65.2	3.1	78.0	3.8	91.4	4.7	93.1	4.7	95.9	4.7
	35.6	46.0	2.2	55.9	2.7	65.2	3.1	78.0	3.8	91.4	4.8	93.1	4.7	95.7	4.8
	39.2	46.0	2.2	55.9	2.7	65.2	3.2	78.0	3.8	91.4	4.8	93.1	4.7	95.7	4.7
	42.8	46.0	2.2	55.9	2.7	65.2	3.2	78.0	4.0	91.4	4.9	93.1	4.8	95.2	4.8
	46.4	46.0	2.2	55.9	2.7	65.2	3.2	78.0	4.0	89.3	4.7	93.1	4.9	94.7	4.8
	50	46.0	2.2	55.9	2.8	65.2	3.3	78.0	4.0	88.3	4.9	90.7	5.0	93.4	5.2
	53.6	46.0	2.3	55.9	2.8	65.2	3.3	78.0	4.2	87.0	5.3	89.3	5.4	92.0	5.5
	57.2	46.0	2.3	55.9	2.9	65.2	3.4	78.0	4.6	85.7	5.6	88.1	5.6	90.7	5.7
	60.8	46.0	2.4	55.9	3.0	65.2	3.7	78.0	5.1	84.5	5.8	86.8	5.9	89.4	6.0
	64.4	46.0	2.5	55.9	3.2	65.2	4.1	78.0	5.6	83.3	6.1	85.6	6.2	88.1	6.3
	68	46.0	2.7	55.9	3.5	65.2	4.5	78.0	6.1	82.1	6.4	84.3	6.4	86.9	6.6
	73.4	46.0	3.0	55.9	4.0	65.2	5.1	75.7	6.5	80.2	6.7	82.4	6.8	85.0	6.9
	77	46.0	3.3	55.9	4.3	65.2	5.5	74.5	6.8	79.0	7.0	81.2	7.1	83.8	7.2
	80.6	46.0	3.6	55.9	4.7	65.2	5.9	73.4	7.0	77.8	7.2	79.9	7.3	82.4	7.4
	84.2	46.0	3.8	55.9	5.1	65.2	6.4	72.2	7.3	76.5	7.5	78.6	7.6	80.5	7.6
	87.8	46.0	4.2	55.9	5.5	65.2	6.8	70.9	7.5	74.7	7.6	76.2	7.6	78.1	7.6
	91.4	46.0	4.5	55.9	5.9	65.2	7.3	68.9	7.6	72.3	7.6	73.8	7.6	75.6	7.6
	95	46.0	4.8	55.9	6.3	63.2	7.6	66.6	7.6	69.9	7.6	71.4	7.6	73.1	7.6
	98.6	46.0	5.2	55.9	6.8	60.9	7.6	64.3	7.6	67.5	7.6	68.9	7.6	70.8	7.6
	102.2	46.0	5.6	55.9	7.4	58.6	7.6	61.9	7.6	65.0	7.6	66.4	7.6	68.6	7.7
	105.8	46.0	6.1	53.9	7.6	56.2	7.6	59.3	7.6	62.6	7.6	63.6	7.6	66.0	7.7
	109.4	46.0	6.6	51.6	7.6	53.9	7.6	56.9	7.6	60.2	7.6	61.4	7.6	63.5	7.7
	113	46.0	7.2	49.3	7.6	51.7	7.6	54.6	7.6	57.6	7.6	58.9	7.6	60.4	7.5
	118.4	43.6	7.6	46.0	7.6	48.4	7.7	50.0	7.3	49.9	6.5	50.9	6.5	51.5	6.2
	122	40.5	7.2	41.3	6.8	42.2	6.5	43.2	6.1	45.0	5.9	44.5	5.6	44.1	5.2
	125	34.4	6.0	35.1	5.7	36.2	5.5	37.2	5.2	38.0	4.9	37.1	4.5	38.6	4.5
120%	5	42.4	1.9	51.6	2.4	60.2	2.9	72.0	3.5	84.4	4.2	86.0	4.2	96.2	4.4
	10.4	42.4	1.9	51.6	2.4	60.2	2.9	72.0	3.5	84.4	4.2	86.0	4.3	96.2	4.5
	14	42.4	1.9	51.6	2.4	60.2	2.9	72.0	3.5	84.4	4.2	86.0	4.3	96.2	4.6
	17.6	42.4	1.9	51.6	2.4	60.2	2.9	72.0	3.5	84.4	4.2	86.0	4.3	96.2	4.7
	23	42.4	1.9	51.6	2.4	60.2	2.9	72.0	3.5	84.4	4.2	86.0	4.3	96.2	4.7
	28.4	42.4	1.9	51.6	2.4	60.2	2.9	72.0	3.5	84.4	4.2	86.0	4.3	96.2	4.7
	32	42.4	1.9	51.6	2.4	60.2	2.9	72.0	3.5	84.4	4.2	86.0	4.3	96.2	4.7
	35.6	42.4	1.9	51.6	2.4	60.2	2.9	72.0	3.5	84.4	4.2	86.0	4.4	96.2	4.8
	39.2	42.4	2.0	51.6	2.5	60.2	2.9	72.0	3.5	84.4	4.2	86.0	4.4	96.2	4.8
	42.8	42.4	2.0	51.6	2.5	60.2	2.9	72.0	3.6	84.4	4.3	86.0	4.4	94.0	4.8
	46.4	42.4	2.0	51.6	2.5	60.2	2.9	72.0	3.6	84.4	4.4	86.0	4.5	93.6	4.8
	50	42.4	2.0	51.6	2.5	60.2	2.9	72.0	3.7	84.4	4.4	86.0	4.6	92.2	5.1
	53.6	42.4	2.0	51.6	2.5	60.2	3.0	72.0	3.8	84.4	4.7	86.0	4.7	90.9	5.4
	57.2	42.4	2.1	51.6	2.6	60.2	3.1	72.0	3.8	84.4	5.2	86.0	5.2	89.6	5.7
	60.8	42.4	2.1	51.6	2.6	60.2	3.2	72.0	4.2	84.4	5.7	86.0	5.7	88.4	6.0
	64.4	42.4	2.2	51.6	2.8	60.2	3.5	72.0	4.7	82.3	6.1	86.0	6.2	87.2	6.3
	68	42.4	2.3	51.6	3.0	60.2	3.8	72.0	5.1	81.1	6.3	83.3	6.4	85.9	6.5
	73.4	42.4	2.6	51.6	3.4	60.2	4.3	72.0	5.7	79.3	6.7	81.5	6.8	84.0	6.9
	77	42.4	2.9	51.6	3.7	60.2	4.7	72.0	6.2	78.1	6.9	80.4	7.0	82.8	7.1
	80.6	42.4	3.1	51.6	4.1	60.2	5.1	72.0	6.7	76.9	7.2	79.1	7.3	81.5	7.4
	84.2	42.4	3.4	51.6	4.4	60.2	5.5	72.0	7.2	75.7	7.4	77.8	7.5	80.0	7.6
	87.8	42.4	3.7	51.6	4.7	60.2	5.9	70.2	7.5	73.9	7.6	75.7	7.6	77.6	7.6
	91.4	42.4	3.9	51.6	5.1	60.2	6.3	68.4	7.6	71.6	7.6	73.3	7.6	75.4	7.7
	95	42.4	4.2	51.6	5.5	60.2	6.8	66.1	7.6	69.2	7.6	70.9	7.6	72.9	7.7
	98.6	42.4	4.6	51.6	5.9	60.2	7.3	63.7	7.6	66.8	7.6	68.5	7.6	70.5	7.7
	102.2	42.4	5.0	51.6	6.4	58.2	7.6	61.4	7.6	64.4	7.6	66.3	7.7	68.0	7.6
	105.8	42.4	5.3	51.6	6.9	55.9	7.6	59.0	7.6	62.0	7.6	63.8	7.7	65.0	7.5
	109.4	42.4	5.8	51.6	7.5	53.6	7.6	56.9	7.7	59.6	7.6	61.4	7.7	62.9	7.6
	113	42.4	6.3	49.0	7.6	51.2	7.6	54.6	7.7	57.1	7.6	58.9	7.7	60.4	7.6
	118.4	42.4	7.1	45.6	7.6	47.8	7.6	49.6	7.3	50.7	6.8	51.2	6.6	51.8	6.4
	122	40.3	7.3	41.2	6.9	42.0	6.5	43.5	6.2	44.1	5.8	43.6	5.4	45.9	5.6
	125	34.2	6.0	35.5	5.8	35.5	5.4	37.0	5.2	37.8	4.9	36.9	4.5	38.4	4.5

Manufacturer reserves the right to change, at any time, specifications and designs without notice and without obligations.

CR	Outdoor Air Temperature (°F DB/WB)	5 Ton Cooling Capacity - Indoor Air Temperature (°F DB/WB)													
		67		71		75		80		85		87		90	
		57		60		63		67		71		72		75	
		TC	PI	TC	PI	TC	PI	TC	PI	TC	PI	TC	PI	TC	PI
110%	5	38.9	1.7	47.3	2.1	55.2	2.6	66.0	3.2	77.3	3.8	78.8	3.9	88.2	4.2
	10.4	38.9	1.7	47.3	2.2	55.2	2.6	66.0	3.2	77.3	3.8	78.8	4.0	88.2	4.3
	14	38.9	1.7	47.3	2.2	55.2	2.6	66.0	3.2	77.3	3.8	78.8	4.0	88.2	4.3
	17.6	38.9	1.7	47.3	2.2	55.2	2.6	66.0	3.2	77.3	3.8	78.8	4.0	88.2	4.3
	23	38.9	1.7	47.3	2.2	55.2	2.6	66.0	3.2	77.3	3.8	78.8	4.0	88.2	4.4
	28.4	38.9	1.7	47.3	2.2	55.2	2.6	66.0	3.2	77.3	3.8	78.8	4.0	88.2	4.4
	32	38.9	1.7	47.3	2.2	55.2	2.6	66.0	3.2	77.3	3.8	78.8	4.0	88.2	4.4
	35.6	38.9	1.7	47.3	2.2	55.2	2.6	66.0	3.2	77.3	3.8	78.8	4.0	88.2	4.5
	39.2	38.9	1.8	47.3	2.2	55.2	2.7	66.0	3.2	77.3	3.9	78.8	4.0	88.2	4.5
	42.8	38.9	1.8	47.3	2.3	55.2	2.7	66.0	3.2	77.3	3.9	78.8	4.0	88.2	4.5
	46.4	38.9	1.8	47.3	2.3	55.2	2.7	66.0	3.3	77.3	4.0	78.8	4.1	88.2	4.6
	50	38.9	1.9	47.3	2.3	55.2	2.7	66.0	3.3	77.3	4.0	78.8	4.2	88.2	4.7
	53.6	38.9	1.9	47.3	2.3	55.2	2.7	66.0	3.4	77.3	4.1	78.8	4.2	88.2	4.8
	57.2	38.9	1.9	47.3	2.3	55.2	2.8	66.0	3.5	77.3	4.2	78.8	4.2	88.2	5.4
	60.8	38.9	1.9	47.3	2.3	55.2	2.9	66.0	3.5	77.3	4.6	78.8	4.6	88.2	5.9
	64.4	38.9	1.9	47.3	2.4	55.2	2.9	66.0	3.8	77.3	5.1	78.8	5.0	85.9	6.2
	68	38.9	2.0	47.3	2.6	55.2	3.2	66.0	4.2	77.3	5.5	78.8	5.5	84.7	6.5
	73.4	38.9	2.3	47.3	2.9	55.2	3.6	66.0	4.8	77.3	6.2	78.8	6.2	82.9	6.8
	77	38.9	2.5	47.3	3.2	55.2	3.9	66.0	5.2	77.3	6.7	78.8	6.7	81.7	7.1
	80.6	38.9	2.7	47.3	3.5	55.2	4.3	66.0	5.6	77.3	7.2	78.8	7.2	80.5	7.3
	84.2	38.9	2.9	47.3	3.7	55.2	4.6	66.0	6.0	74.8	7.4	76.9	7.5	79.2	7.6
	87.8	38.9	3.2	47.3	4.1	55.2	5.0	66.0	6.5	73.3	7.6	75.0	7.6	76.8	7.6
	91.4	38.9	3.4	47.3	4.4	55.2	5.4	66.0	7.0	71.0	7.6	72.6	7.6	74.5	7.6
	95	38.9	3.7	47.3	4.8	55.2	5.8	66.0	7.5	68.6	7.6	70.1	7.6	72.1	7.6
	98.6	38.9	4.0	47.3	5.1	55.2	6.3	63.1	7.6	66.3	7.6	67.7	7.6	69.6	7.6
	102.2	38.9	4.3	47.3	5.5	55.2	6.8	60.8	7.6	64.0	7.6	65.3	7.6	67.2	7.6
	105.8	38.9	4.7	47.3	6.0	55.2	7.3	58.4	7.6	61.6	7.6	62.9	7.6	64.7	7.6
	109.4	38.9	5.1	47.3	6.5	53.2	7.6	56.1	7.6	59.5	7.7	60.7	7.6	62.2	7.6
	113	38.9	5.5	47.3	7.0	50.9	7.6	53.8	7.6	56.6	7.6	58.3	7.6	59.7	7.6
	118.4	38.9	6.2	45.3	7.6	47.4	7.6	49.1	7.2	50.8	6.9	50.7	6.6	51.3	6.3
	122	38.9	6.8	41.1	6.9	42.1	6.6	42.6	6.1	43.7	5.8	43.9	5.5	44.9	5.4
	125	34.2	6.0	34.8	5.7	35.2	5.4	36.8	5.2	37.5	4.9	36.7	4.5	38.1	4.5
100%	5	35.4	1.5	43.0	1.9	50.1	2.4	60.0	2.9	70.3	3.4	71.6	3.5	80.1	4.0
	10.4	35.4	1.5	43.0	1.9	50.1	2.4	60.0	2.9	70.3	3.5	71.6	3.6	80.1	4.0
	14	35.4	1.5	43.0	1.9	50.1	2.4	60.0	2.9	70.3	3.5	71.6	3.6	80.1	4.0
	17.6	35.4	1.5	43.0	1.9	50.1	2.4	60.0	2.9	70.3	3.5	71.6	3.6	80.1	4.0
	23	35.4	1.5	43.0	2.0	50.1	2.4	60.0	2.9	70.3	3.5	71.6	3.6	80.1	4.1
	28.4	35.4	1.5	43.0	2.0	50.1	2.4	60.0	2.9	70.3	3.5	71.6	3.6	80.1	4.1
	32	35.4	1.5	43.0	2.0	50.1	2.4	60.0	2.9	70.3	3.5	71.6	3.6	80.1	4.1
	35.6	35.4	1.6	43.0	2.0	50.1	2.4	60.0	2.9	70.3	3.5	71.6	3.6	80.1	4.1
	39.2	35.4	1.6	43.0	2.0	50.1	2.4	60.0	2.9	70.3	3.5	71.6	3.6	80.1	4.1
	42.8	35.4	1.6	43.0	2.0	50.1	2.4	60.0	2.9	70.3	3.5	71.6	3.7	80.1	4.2
	46.4	35.4	1.6	43.0	2.0	50.1	2.4	60.0	3.0	70.3	3.6	71.6	3.7	80.1	4.2
	50	35.4	1.7	43.0	2.0	50.1	2.4	60.0	3.0	70.3	3.7	71.6	3.8	80.1	4.3
	53.6	35.4	1.7	43.0	2.0	50.1	2.5	60.0	3.0	70.3	3.7	71.6	3.8	80.1	4.3
	57.2	35.4	1.7	43.0	2.1	50.1	2.5	60.0	3.1	70.3	3.7	71.6	3.8	80.1	4.3
	60.8	35.4	1.7	43.0	2.1	50.1	2.6	60.0	3.2	70.3	3.7	71.6	3.8	80.1	4.6
	64.4	35.4	1.7	43.0	2.2	50.1	2.6	60.0	3.2	70.3	4.0	71.6	4.0	80.1	5.1
	68	35.4	1.7	43.0	2.2	50.1	2.6	60.0	3.4	70.3	4.4	71.6	4.4	80.1	5.5
	73.4	35.4	1.9	43.0	2.5	50.1	3.0	60.0	3.9	70.3	5.1	71.6	5.0	80.1	6.2
	77	35.4	2.1	43.0	2.7	50.1	3.3	60.0	4.3	70.3	5.5	71.6	5.4	80.1	6.7
	80.6	35.4	2.3	43.0	2.9	50.1	3.6	60.0	4.6	70.3	5.9	71.6	5.9	80.1	7.3
	84.2	35.4	2.5	43.0	3.2	50.1	3.9	60.0	5.0	70.3	6.4	71.6	6.3	78.0	7.5
	87.8	35.4	2.8	43.0	3.5	50.1	4.2	60.0	5.4	70.3	6.9	71.6	6.8	75.9	7.6
	91.4	35.4	3.0	43.0	3.8	50.1	4.6	60.0	5.8	70.3	7.4	71.6	7.4	73.5	7.6
	95	35.4	3.2	43.0	4.1	50.1	4.9	60.0	6.3	67.9	7.6	69.4	7.6	71.0	7.6
	98.6	35.4	3.5	43.0	4.4	50.1	5.3	60.0	6.8	65.6	7.6	67.1	7.6	68.7	7.6
	102.2	35.4	3.8	43.0	4.7	50.1	5.8	60.0	7.4	63.2	7.6	64.7	7.6	66.3	7.6
	105.8	35.4	4.1	43.0	5.1	50.1	6.2	57.9	7.6	60.8	7.6	62.3	7.6	63.9	7.6
	109.4	35.4	4.4	43.0	5.5	50.1	6.8	55.6	7.6	58.5	7.6	59.9	7.6	61.4	7.6
	113	35.4	4.8	43.0	6.0	50.1	7.3	53.4	7.6	56.1	7.6	57.5	7.6	59.0	7.6
	118.4	35.4	5.4	43.0	6.8	47.1	7.6	48.8	7.3	49.7	6.8	50.1	6.5	50.7	6.3
	122	35.4	5.8	41.0	7.0	41.7	6.6	42.7	6.2	43.9	5.9	43.5	5.5	45.1	5.6
	125	34.1	6.1	34.7	5.7	35.5	5.5	35.9	5.1	36.5	4.8	37.8	4.8	37.8	4.5

Manufacturer reserves the right to change, at any time, specifications and designs without notice and without obligations.

CR	Outdoor Air Temperature (°F DB/WB)	5 Ton Cooling Capacity - Indoor Air Temperature (°F DB/WB)													
		67		71		75		80		85		87		90	
		57		60		63		67		71		72		75	
		TC	PI	TC	PI	TC	PI	TC	PI	TC	PI	TC	PI	TC	PI
90%	5	31.8	1.3	38.7	1.7	45.1	2.1	54.0	2.6	63.3	3.1	64.5	3.2	72.1	3.6
	10.4	31.8	1.3	38.7	1.7	45.1	2.1	54.0	2.6	63.3	3.1	64.5	3.2	72.1	3.6
	14	31.8	1.3	38.7	1.7	45.1	2.1	54.0	2.6	63.3	3.1	64.5	3.2	72.1	3.6
	17.6	31.8	1.3	38.7	1.7	45.1	2.1	54.0	2.6	63.3	3.1	64.5	3.2	72.1	3.6
	23	31.8	1.3	38.7	1.7	45.1	2.2	54.0	2.6	63.3	3.1	64.5	3.2	72.1	3.6
	28.4	31.8	1.3	38.7	1.8	45.1	2.2	54.0	2.6	63.3	3.1	64.5	3.2	72.1	3.6
	32	31.8	1.3	38.7	1.8	45.1	2.2	54.0	2.6	63.3	3.1	64.5	3.2	72.1	3.7
	35.6	31.8	1.4	38.7	1.8	45.1	2.2	54.0	2.6	63.3	3.1	64.5	3.2	72.1	3.7
	39.2	31.8	1.4	38.7	1.8	45.1	2.2	54.0	2.6	63.3	3.2	64.5	3.2	72.1	3.7
	42.8	31.8	1.4	38.7	1.8	45.1	2.2	54.0	2.6	63.3	3.2	64.5	3.2	72.1	3.7
	46.4	31.8	1.4	38.7	1.8	45.1	2.2	54.0	2.7	63.3	3.2	64.5	3.3	72.1	3.8
	50	31.8	1.5	38.7	1.8	45.1	2.2	54.0	2.7	63.3	3.2	64.5	3.4	72.1	3.8
	53.6	31.8	1.5	38.7	1.9	45.1	2.2	54.0	2.7	63.3	3.3	64.5	3.4	72.1	3.9
	57.2	31.8	1.5	38.7	1.9	45.1	2.2	54.0	2.8	63.3	3.4	64.5	3.4	72.1	3.9
	60.8	31.8	1.5	38.7	1.9	45.1	2.3	54.0	2.8	63.3	3.4	64.5	3.4	72.1	3.9
	64.4	31.8	1.5	38.7	1.9	45.1	2.3	54.0	2.8	63.3	3.4	64.5	3.4	72.1	3.9
	68	31.8	1.5	38.7	2.0	45.1	2.3	54.0	2.8	63.3	3.5	64.5	3.5	72.1	4.3
	73.4	31.8	1.6	38.7	2.0	45.1	2.5	54.0	3.2	63.3	4.0	64.5	3.9	72.1	4.9
	77	31.8	1.8	38.7	2.2	45.1	2.7	54.0	3.4	63.3	4.4	64.5	4.3	72.1	5.3
	80.6	31.8	1.9	38.7	2.5	45.1	3.0	54.0	3.8	63.3	4.8	64.5	4.7	72.1	5.8
	84.2	31.8	2.1	38.7	2.7	45.1	3.2	54.0	4.1	63.3	5.2	64.5	5.1	72.1	6.3
	87.8	31.8	2.3	38.7	2.9	45.1	3.5	54.0	4.4	63.3	5.6	64.5	5.5	72.1	6.8
	91.4	31.8	2.5	38.7	3.2	45.1	3.8	54.0	4.8	63.3	6.0	64.5	6.0	72.1	7.3
	95	31.8	2.8	38.7	3.5	45.1	4.1	54.0	5.2	63.3	6.5	64.5	6.5	70.2	7.6
	98.6	31.8	3.0	38.7	3.7	45.1	4.5	54.0	5.6	63.3	7.0	64.5	7.0	67.8	7.6
	102.2	31.8	3.3	38.7	4.0	45.1	4.8	54.0	6.1	63.3	7.6	64.5	7.6	65.5	7.6
	105.8	31.8	3.5	38.7	4.4	45.1	5.2	54.0	6.6	60.1	7.6	61.5	7.6	63.1	7.6
	109.4	31.8	3.8	38.7	4.7	45.1	5.7	54.0	7.2	57.8	7.6	59.1	7.6	60.7	7.6
	113	31.8	4.1	38.7	5.1	45.1	6.1	52.7	7.6	55.5	7.6	56.7	7.6	58.3	7.6
	118.4	31.8	4.7	38.7	5.8	45.1	7.0	48.8	7.4	49.6	6.9	50.0	6.7	50.7	6.4
	122	31.8	5.0	38.7	6.3	41.6	6.7	42.7	6.3	43.4	5.8	43.6	5.6	44.6	5.5
	125	31.8	5.5	34.7	5.8	35.2	5.5	36.7	5.3	36.8	4.9	37.4	4.8	37.4	4.5
80%	5	28.3	1.2	34.4	1.5	40.1	1.9	48.0	2.3	56.2	2.7	57.3	2.8	64.1	3.1
	10.4	28.3	1.2	34.4	1.5	40.1	1.9	48.0	2.3	56.2	2.7	57.3	2.8	64.1	3.2
	14	28.3	1.2	34.4	1.5	40.1	1.9	48.0	2.3	56.2	2.7	57.3	2.9	64.1	3.2
	17.6	28.3	1.2	34.4	1.5	40.1	1.9	48.0	2.3	56.2	2.8	57.3	2.9	64.1	3.2
	23	28.3	1.2	34.4	1.5	40.1	1.9	48.0	2.3	56.2	2.8	57.3	2.9	64.1	3.2
	28.4	28.3	1.2	34.4	1.6	40.1	1.9	48.0	2.3	56.2	2.8	57.3	2.9	64.1	3.2
	32	28.3	1.2	34.4	1.6	40.1	1.9	48.0	2.3	56.2	2.8	57.3	2.9	64.1	3.2
	35.6	28.3	1.2	34.4	1.6	40.1	1.9	48.0	2.3	56.2	2.8	57.3	2.9	64.1	3.2
	39.2	28.3	1.2	34.4	1.6	40.1	1.9	48.0	2.3	56.2	2.8	57.3	2.9	64.1	3.3
	42.8	28.3	1.2	34.4	1.6	40.1	1.9	48.0	2.4	56.2	2.8	57.3	2.9	64.1	3.3
	46.4	28.3	1.3	34.4	1.6	40.1	1.9	48.0	2.4	56.2	2.8	57.3	3.0	64.1	3.3
	50	28.3	1.3	34.4	1.6	40.1	1.9	48.0	2.4	56.2	2.9	57.3	3.0	64.1	3.4
	53.6	28.3	1.3	34.4	1.6	40.1	2.0	48.0	2.4	56.2	2.9	57.3	3.0	64.1	3.4
	57.2	28.3	1.3	34.4	1.7	40.1	2.0	48.0	2.5	56.2	2.9	57.3	3.0	64.1	3.4
	60.8	28.3	1.4	34.4	1.7	40.1	2.0	48.0	2.5	56.2	2.9	57.3	3.0	64.1	3.4
	64.4	28.3	1.4	34.4	1.7	40.1	2.0	48.0	2.5	56.2	3.0	57.3	3.1	64.1	3.4
	68	28.3	1.4	34.4	1.7	40.1	2.0	48.0	2.5	56.2	3.0	57.3	3.1	64.1	3.4
	73.4	28.3	1.4	34.4	1.7	40.1	2.1	48.0	2.5	56.2	3.1	57.3	3.1	64.1	3.8
	77	28.3	1.5	34.4	1.8	40.1	2.2	48.0	2.8	56.2	3.4	57.3	3.3	64.1	4.1
	80.6	28.3	1.7	34.4	2.0	40.1	2.4	48.0	3.0	56.2	3.7	57.3	3.7	64.1	4.5
	84.2	28.3	1.8	34.4	2.2	40.1	2.6	48.0	3.3	56.2	4.1	57.3	4.0	64.1	4.9
	87.8	28.3	2.0	34.4	2.4	40.1	2.9	48.0	3.6	56.2	4.4	57.3	4.4	64.1	5.3
	91.4	28.3	2.2	34.4	2.7	40.1	3.2	48.0	3.9	56.2	4.8	57.3	4.7	64.1	5.8
	95	28.3	2.4	34.4	2.9	40.1	3.4	48.0	4.2	56.2	5.2	57.3	5.1	64.1	6.2
	98.6	28.3	2.6	34.4	3.1	40.1	3.7	48.0	4.6	56.2	5.7	57.3	5.6	64.1	6.7
	102.2	28.3	2.8	34.4	3.4	40.1	4.0	48.0	5.0	56.2	6.1	57.3	6.1	64.1	7.3
	105.8	28.3	3.0	34.4	3.7	40.1	4.4	48.0	5.4	56.2	6.7	57.3	6.6	62.2	7.6
	109.4	28.3	3.3	34.4	4.0	40.1	4.7	48.0	5.8	56.2	7.2	57.3	7.2	59.8	7.6
	113	28.3	3.6	34.4	4.3	40.1	5.1	48.0	6.4	54.6	7.6	55.9	7.6	57.4	7.6
	118.4	28.3	4.0	34.4	4.9	40.1	5.8	48.0	7.2	49.5	7.1	50.0	6.8	50.4	6.5
	122	28.3	4.3	34.4	5.3	40.1	6.3	42.3	6.3	43.3	5.9	43.6	5.7	43.9	5.5
	125	28.3	4.7	34.4	5.7	35.2	5.6	35.7	5.2	36.4	4.9	37.6	4.9	37.0	4.5

Manufacturer reserves the right to change, at any time, specifications and designs without notice and without obligations.

CR	Outdoor Air Temperature (°F DB/WB)	5 Ton Cooling Capacity - Indoor Air Temperature (°F DB/WB)													
		67		71		75		80		85		87		90	
		57		60		63		67		71		72		75	
		TC	PI	TC	PI	TC	PI	TC	PI	TC	PI	TC	PI	TC	PI
70%	5	24.8	1.0	30.1	1.3	35.1	1.6	42.0	2.0	49.2	2.4	50.1	2.5	56.1	2.7
	10.4	24.8	1.0	30.1	1.3	35.1	1.6	42.0	2.0	49.2	2.4	50.1	2.5	56.1	2.7
	14	24.8	1.0	30.1	1.3	35.1	1.6	42.0	2.0	49.2	2.4	50.1	2.5	56.1	2.7
	17.6	24.8	1.0	30.1	1.3	35.1	1.6	42.0	2.0	49.2	2.4	50.1	2.5	56.1	2.7
	23	24.8	1.0	30.1	1.3	35.1	1.6	42.0	2.0	49.2	2.4	50.1	2.5	56.1	2.8
	28.4	24.8	1.0	30.1	1.4	35.1	1.7	42.0	2.0	49.2	2.4	50.1	2.5	56.1	2.8
	32	24.8	1.0	30.1	1.4	35.1	1.7	42.0	2.0	49.2	2.4	50.1	2.5	56.1	2.8
	35.6	24.8	1.1	30.1	1.4	35.1	1.7	42.0	2.0	49.2	2.4	50.1	2.5	56.1	2.8
	39.2	24.8	1.1	30.1	1.4	35.1	1.7	42.0	2.1	49.2	2.4	50.1	2.5	56.1	2.8
	42.8	24.8	1.1	30.1	1.4	35.1	1.7	42.0	2.1	49.2	2.4	50.1	2.5	56.1	2.9
	46.4	24.8	1.1	30.1	1.4	35.1	1.7	42.0	2.1	49.2	2.4	50.1	2.5	56.1	2.9
	50	24.8	1.1	30.1	1.4	35.1	1.7	42.0	2.1	49.2	2.5	50.1	2.5	56.1	2.9
	53.6	24.8	1.1	30.1	1.4	35.1	1.7	42.0	2.1	49.2	2.5	50.1	2.6	56.1	2.9
	57.2	24.8	1.1	30.1	1.4	35.1	1.7	42.0	2.1	49.2	2.5	50.1	2.6	56.1	2.9
	60.8	24.8	1.1	30.1	1.5	35.1	1.7	42.0	2.1	49.2	2.5	50.1	2.6	56.1	2.9
	64.4	24.8	1.2	30.1	1.5	35.1	1.7	42.0	2.1	49.2	2.6	50.1	2.6	56.1	3.0
	68	24.8	1.2	30.1	1.5	35.1	1.8	42.0	2.2	49.2	2.6	50.1	2.6	56.1	3.0
	73.4	24.8	1.2	30.1	1.5	35.1	1.8	42.0	2.2	49.2	2.6	50.1	2.7	56.1	3.0
	77	24.8	1.3	30.1	1.5	35.1	1.8	42.0	2.2	49.2	2.6	50.1	2.7	56.1	3.1
	80.6	24.8	1.4	30.1	1.7	35.1	1.9	42.0	2.4	49.2	2.9	50.1	2.8	56.1	3.4
	84.2	24.8	1.6	30.1	1.8	35.1	2.1	42.0	2.6	49.2	3.2	50.1	3.1	56.1	3.7
	87.8	24.8	1.7	30.1	2.0	35.1	2.3	42.0	2.8	49.2	3.5	50.1	3.4	56.1	4.0
	91.4	24.8	1.9	30.1	2.2	35.1	2.5	42.0	3.1	49.2	3.8	50.1	3.7	56.1	4.4
	95	24.8	2.0	30.1	2.4	35.1	2.8	42.0	3.4	49.2	4.1	50.1	4.0	56.1	4.8
	98.6	24.8	2.2	30.1	2.6	35.1	3.0	42.0	3.7	49.2	4.5	50.1	4.4	56.1	5.2
	102.2	24.8	2.4	30.1	2.8	35.1	3.3	42.0	4.0	49.2	4.8	50.1	4.8	56.1	5.7
	105.8	24.8	2.6	30.1	3.1	35.1	3.6	42.0	4.4	49.2	5.3	50.1	5.2	56.1	6.2
	109.4	24.8	2.8	30.1	3.3	35.1	3.9	42.0	4.7	49.2	5.7	50.1	5.6	56.1	6.7
	113	24.8	3.0	30.1	3.6	35.1	4.2	42.0	5.1	49.2	6.2	50.1	6.1	56.1	7.3
	118.4	24.8	3.4	30.1	4.1	35.1	4.8	42.0	5.8	49.2	7.1	50.1	7.0	50.1	6.7
	122	24.8	3.7	30.1	4.4	35.1	5.2	42.0	6.3	43.0	6.1	43.3	5.8	43.7	5.6
	125	24.8	4.0	30.1	4.8	35.1	5.6	35.6	5.3	36.4	5.0	36.9	4.9	37.7	4.8
60%	5	21.2	0.9	25.8	1.1	30.1	1.4	36.0	1.7	42.2	2.0	43.0	2.1	48.1	2.3
	10.4	21.2	0.9	25.8	1.1	30.1	1.4	36.0	1.7	42.2	2.0	43.0	2.1	48.1	2.3
	14	21.2	0.9	25.8	1.1	30.1	1.4	36.0	1.7	42.2	2.0	43.0	2.1	48.1	2.3
	17.6	21.2	0.9	25.8	1.1	30.1	1.4	36.0	1.7	42.2	2.0	43.0	2.1	48.1	2.3
	23	21.2	0.9	25.8	1.1	30.1	1.4	36.0	1.7	42.2	2.1	43.0	2.1	48.1	2.3
	28.4	21.2	0.9	25.8	1.1	30.1	1.4	36.0	1.7	42.2	2.1	43.0	2.1	48.1	2.4
	32	21.2	0.9	25.8	1.1	30.1	1.4	36.0	1.8	42.2	2.1	43.0	2.1	48.1	2.4
	35.6	21.2	0.9	25.8	1.2	30.1	1.4	36.0	1.8	42.2	2.1	43.0	2.1	48.1	2.4
	39.2	21.2	0.9	25.8	1.2	30.1	1.4	36.0	1.8	42.2	2.1	43.0	2.1	48.1	2.4
	42.8	21.2	0.9	25.8	1.2	30.1	1.4	36.0	1.8	42.2	2.1	43.0	2.1	48.1	2.4
	46.4	21.2	0.9	25.8	1.2	30.1	1.4	36.0	1.8	42.2	2.1	43.0	2.1	48.1	2.4
	50	21.2	1.0	25.8	1.2	30.1	1.4	36.0	1.8	42.2	2.1	43.0	2.1	48.1	2.4
	53.6	21.2	1.0	25.8	1.2	30.1	1.4	36.0	1.8	42.2	2.1	43.0	2.2	48.1	2.4
	57.2	21.2	1.0	25.8	1.2	30.1	1.5	36.0	1.8	42.2	2.1	43.0	2.2	48.1	2.5
	60.8	21.2	1.0	25.8	1.2	30.1	1.5	36.0	1.8	42.2	2.1	43.0	2.2	48.1	2.5
	64.4	21.2	1.0	25.8	1.2	30.1	1.5	36.0	1.8	42.2	2.1	43.0	2.2	48.1	2.5
	68	21.2	1.0	25.8	1.2	30.1	1.5	36.0	1.8	42.2	2.2	43.0	2.3	48.1	2.5
	73.4	21.2	1.0	25.8	1.3	30.1	1.5	36.0	1.8	42.2	2.2	43.0	2.3	48.1	2.6
	77	21.2	1.1	25.8	1.3	30.1	1.6	36.0	1.9	42.2	2.2	43.0	2.3	48.1	2.6
	80.6	21.2	1.2	25.8	1.4	30.1	1.6	36.0	1.9	42.2	2.3	43.0	2.3	48.1	2.6
	84.2	21.2	1.3	25.8	1.5	30.1	1.7	36.0	2.0	42.2	2.4	43.0	2.3	48.1	2.8
	87.8	21.2	1.5	25.8	1.7	30.1	1.9	36.0	2.2	42.2	2.6	43.0	2.5	48.1	3.0
	91.4	21.2	1.6	25.8	1.8	30.1	2.0	36.0	2.4	42.2	2.9	43.0	2.8	48.1	3.3
	95	21.2	1.7	25.8	2.0	30.1	2.2	36.0	2.7	42.2	3.2	43.0	3.1	48.1	3.6
	98.6	21.2	1.9	25.8	2.2	30.1	2.4	36.0	2.9	42.2	3.5	43.0	3.4	48.1	4.0
	102.2	21.2	2.0	25.8	2.3	30.1	2.6	36.0	3.2	42.2	3.8	43.0	3.7	48.1	4.3
	105.8	21.2	2.2	25.8	2.5	30.1	2.9	36.0	3.5	42.2	4.1	43.0	4.0	48.1	4.7
	109.4	21.2	2.4	25.8	2.8	30.1	3.2	36.0	3.8	42.2	4.5	43.0	4.4	48.1	5.1
	113	21.2	2.6	25.8	3.0	30.1	3.4	36.0	4.1	42.2	4.9	43.0	4.8	48.1	5.6
	118.4	21.2	2.9	25.8	3.4	30.1	3.9	36.0	4.6	42.2	5.5	43.0	5.4	48.1	6.4
	122	21.2	3.1	25.8	3.7	30.1	4.2	36.0	5.0	42.2	6.0	43.0	5.9	43.3	5.8
	125	21.2	3.4	25.8	4.0	30.1	4.6	36.0	5.5	36.1	5.1	36.4	4.9	36.8	4.8

Manufacturer reserves the right to change, at any time, specifications and designs without notice and without obligations.

CR	Outdoor Air Temperature (°F DB/WB)	5 Ton Cooling Capacity - Indoor Air Temperature (°F DB/WB)													
		67		71		75		80		85		87		90	
		57		60		63		67		71		72		75	
		TC	PI	TC	PI	TC	PI	TC	PI	TC	PI	TC	PI	TC	PI
50%	5	17.7	0.7	21.5	0.9	25.1	1.1	30.0	1.4	35.1	1.6	35.8	1.7	40.1	1.9
	10.4	17.7	0.8	21.5	0.9	25.1	1.1	30.0	1.4	35.1	1.6	35.8	1.7	40.1	1.9
	14	17.7	0.8	21.5	0.9	25.1	1.1	30.0	1.4	35.1	1.7	35.8	1.7	40.1	1.9
	17.6	17.7	0.8	21.5	0.9	25.1	1.1	30.0	1.4	35.1	1.7	35.8	1.7	40.1	1.9
	23	17.7	0.8	21.5	0.9	25.1	1.1	30.0	1.4	35.1	1.7	35.8	1.7	40.1	1.9
	28.4	17.7	0.8	21.5	0.9	25.1	1.1	30.0	1.4	35.1	1.7	35.8	1.7	40.1	1.9
	32	17.7	0.8	21.5	1.0	25.1	1.1	30.0	1.4	35.1	1.7	35.8	1.7	40.1	2.0
	35.6	17.7	0.8	21.5	1.0	25.1	1.1	30.0	1.4	35.1	1.7	35.8	1.7	40.1	2.0
	39.2	17.7	0.8	21.5	1.0	25.1	1.2	30.0	1.4	35.1	1.7	35.8	1.7	40.1	2.0
	42.8	17.7	0.8	21.5	1.0	25.1	1.2	30.0	1.4	35.1	1.7	35.8	1.7	40.1	2.0
	46.4	17.7	0.8	21.5	1.0	25.1	1.2	30.0	1.4	35.1	1.7	35.8	1.7	40.1	2.0
	50	17.7	0.8	21.5	1.0	25.1	1.2	30.0	1.4	35.1	1.7	35.8	1.8	40.1	2.0
	53.6	17.7	0.8	21.5	1.0	25.1	1.2	30.0	1.4	35.1	1.7	35.8	1.8	40.1	2.0
	57.2	17.7	0.8	21.5	1.0	25.1	1.2	30.0	1.5	35.1	1.7	35.8	1.8	40.1	2.0
	60.8	17.7	0.8	21.5	1.0	25.1	1.2	30.0	1.5	35.1	1.7	35.8	1.8	40.1	2.0
	64.4	17.7	0.8	21.5	1.0	25.1	1.2	30.0	1.5	35.1	1.8	35.8	1.8	40.1	2.1
	68	17.7	0.8	21.5	1.0	25.1	1.2	30.0	1.5	35.1	1.8	35.8	1.8	40.1	2.1
	73.4	17.7	0.8	21.5	1.1	25.1	1.2	30.0	1.5	35.1	1.8	35.8	1.9	40.1	2.1
	77	17.7	0.9	21.5	1.1	25.1	1.3	30.0	1.6	35.1	1.8	35.8	1.9	40.1	2.1
	80.6	17.7	1.0	21.5	1.1	25.1	1.3	30.0	1.6	35.1	1.9	35.8	1.9	40.1	2.1
	84.2	17.7	1.1	21.5	1.3	25.1	1.4	30.0	1.6	35.1	1.9	35.8	1.9	40.1	2.2
	87.8	17.7	1.2	21.5	1.4	25.1	1.5	30.0	1.7	35.1	1.9	35.8	1.9	40.1	2.2
	91.4	17.7	1.3	21.5	1.5	25.1	1.7	30.0	1.9	35.1	2.1	35.8	2.0	40.1	2.4
	95	17.7	1.4	21.5	1.6	25.1	1.8	30.0	2.1	35.1	2.3	35.8	2.3	40.1	2.6
	98.6	17.7	1.6	21.5	1.8	25.1	2.0	30.0	2.2	35.1	2.6	35.8	2.5	40.1	2.9
	102.2	17.7	1.7	21.5	1.9	25.1	2.1	30.0	2.5	35.1	2.8	35.8	2.8	40.1	3.2
	105.8	17.7	1.8	21.5	2.1	25.1	2.3	30.0	2.7	35.1	3.1	35.8	3.0	40.1	3.5
	109.4	17.7	2.0	21.5	2.3	25.1	2.5	30.0	2.9	35.1	3.4	35.8	3.3	40.1	3.9
	113	17.7	2.1	21.5	2.5	25.1	2.7	30.0	3.2	35.1	3.7	35.8	3.6	40.1	4.2
	118.4	17.7	2.4	21.5	2.8	25.1	3.1	30.0	3.6	35.1	4.2	35.8	4.2	40.1	4.8
	122	17.7	2.6	21.5	3.0	25.1	3.4	30.0	4.0	35.1	4.6	35.8	4.5	40.1	5.2
	125	17.7	2.8	21.5	3.3	25.1	3.7	30.0	4.3	35.1	5.0	35.8	5.0	36.4	4.9

LEGEND:
CR: Combination ratio
TC: Total capacity (kBtu/h)
PI: Power input (compressor + outdoor fan motor) (kBtu/h)

NOTE:
Shaded cells indicate rating condition.

HEATING CAPACITY

Table 18 — 3 Ton Capacity

CR	Outdoor Air Temperature		3 Ton Heating Capacity - Indoor Air Temperature °F DB											
			61		65		68		70		72		75	
			TC	PI	TC	PI	TC	PI	TC	PI	TC	PI	TC	PI
	°F DB	°C WB	kW	kW	kW	kW	kW	kW	kW	kW	kW	kW	kW	kW
130%	-22	-23	20.5	3.7	20.2	3.8	20.3	4.0	20.3	3.9	20.6	4.0	20.5	4.1
	-13	-14	25.3	3.8	25.0	3.9	25.0	4.1	25.1	4.0	25.5	4.1	25.3	4.2
	-4	-4	30.3	4.1	30.3	4.3	30.4	4.4	30.5	4.3	31.0	4.4	31.1	4.5
	-2	-2	31.7	4.2	31.7	4.4	31.8	4.5	31.9	4.3	32.0	4.4	32.0	4.5
	6	5	35.9	4.4	35.9	4.6	36.0	4.7	36.1	4.4	36.1	4.5	35.9	4.6
	10	8	38.0	4.5	38.0	4.7	38.1	4.9	38.2	4.4	38.8	4.6	35.9	4.3
	13	12	39.8	4.5	39.8	4.7	39.8	4.9	40.0	4.5	38.3	4.3	38.0	4.4
	15	14	40.4	4.5	40.5	4.7	40.5	4.9	40.7	4.4	39.4	4.3	39.1	4.4
	17	15	41.4	4.6	41.0	4.7	40.7	4.9	40.5	4.3	40.3	4.3	40.0	4.4
	19	18	42.9	4.6	42.5	4.8	42.2	4.9	42.0	4.2	41.8	4.3	41.5	4.3
	22	20	44.1	4.7	43.7	4.8	43.4	4.9	43.2	4.3	43.0	4.3	42.6	4.4
	26	24	46.6	4.8	46.2	4.9	45.9	5.0	45.6	4.4	45.4	4.4	45.1	4.5
	30	28	49.1	4.8	48.7	4.9	48.3	5.0	48.1	4.5	47.8	4.6	46.2	4.4
	35	32	51.6	4.9	51.2	5.0	50.8	5.1	50.5	4.7	49.7	4.6	46.2	4.2
	39	36	54.2	4.9	53.7	5.0	54.3	5.2	52.0	4.6	49.7	4.3	46.2	3.9
	44	40	56.9	5.0	56.3	5.1	54.3	4.8	52.0	4.3	49.7	4.1	46.2	3.7
	47	43	58.9	5.0	57.8	4.9	54.3	4.6	52.0	4.1	49.7	3.9	46.2	3.5
	51	47	62.4	5.1	57.8	4.6	54.3	4.2	52.0	3.8	49.7	3.6	46.2	3.3
	54	50	62.4	4.7	57.8	4.3	54.3	3.9	52.0	3.6	49.7	3.4	46.2	3.1
	57	53	62.4	4.4	57.8	4.0	54.3	3.7	52.0	3.4	49.7	3.2	46.2	2.9
	60	56	62.4	4.2	57.8	3.8	54.3	3.4	52.0	3.2	49.7	3.0	46.2	2.8
120%	-22	-23	20.5	3.7	20.3	3.8	20.3	4.0	20.4	3.9	20.7	4.0	20.5	4.1
	-13	-14	25.1	3.8	24.9	4.0	24.9	4.1	25.0	4.1	25.4	4.2	25.2	4.2
	-4	-4	30.2	4.1	30.2	4.3	30.2	4.5	30.4	4.3	30.9	4.4	31.0	4.6
	-2	-2	31.6	4.2	31.6	4.4	31.6	4.6	31.8	4.3	31.9	4.4	31.9	4.5
	6	5	35.8	4.4	35.8	4.6	35.9	4.8	36.0	4.5	36.0	4.5	35.8	4.6
	10	8	37.9	4.5	37.9	4.7	38.0	4.9	38.1	4.5	38.7	4.6	35.8	4.4
	13	12	39.6	4.6	39.6	4.8	39.7	5.0	39.9	4.5	38.2	4.4	37.9	4.4
	15	14	40.3	4.6	40.3	4.8	40.4	5.0	40.6	4.5	39.3	4.4	39.0	4.5
	17	15	41.2	4.6	40.8	4.8	40.5	4.9	40.3	4.3	40.1	4.3	39.8	4.4
	19	18	42.7	4.7	42.3	4.9	42.0	5.0	41.8	4.3	41.5	4.3	41.2	4.4
	22	20	43.9	4.8	43.4	4.9	43.1	5.0	42.9	4.3	42.7	4.4	42.6	4.4
	26	24	46.4	4.9	45.9	5.0	45.6	5.1	45.3	4.5	45.9	4.6	42.6	4.2
	30	28	48.8	4.9	48.3	5.0	48.0	5.1	48.0	4.6	45.9	4.3	42.6	4.0
	35	32	51.3	5.0	50.8	5.1	50.1	5.1	48.0	4.4	45.9	4.1	42.6	3.8
	39	36	53.9	5.0	53.4	5.1	50.1	4.7	48.0	4.1	45.9	3.9	42.6	3.6
	44	40	57.6	5.2	53.4	4.7	50.1	4.3	48.0	3.9	45.9	3.7	42.6	3.3
	47	43	57.6	4.9	53.4	4.4	50.1	4.1	48.0	3.7	45.9	3.5	42.6	3.2
	51	47	57.6	4.5	53.4	4.1	50.1	3.8	48.0	3.4	45.9	3.2	42.6	3.0
	54	50	57.6	4.2	53.4	3.8	50.1	3.5	48.0	3.2	45.9	3.0	42.6	2.8
	57	53	57.6	3.9	53.4	3.6	50.1	3.3	48.0	3.0	45.9	2.9	42.6	2.7
	60	56	57.6	3.7	53.4	3.3	50.1	3.1	48.0	2.9	45.9	2.7	42.6	2.5
110%	-22	-23	20.5	3.7	20.3	3.9	20.3	4.0	20.4	3.9	20.7	4.1	20.5	4.1
	-13	-14	25.0	3.9	24.8	4.0	24.8	4.2	24.9	4.1	25.3	4.2	25.1	4.3
	-4	-4	30.1	4.2	30.1	4.4	30.1	4.5	30.3	4.4	30.8	4.5	30.9	4.6
	-2	-2	31.5	4.3	31.5	4.5	31.5	4.6	31.7	4.4	31.8	4.5	31.8	4.6
	6	5	35.7	4.5	35.7	4.7	35.7	4.9	35.9	4.6	35.9	4.6	35.7	4.7
	10	8	37.7	4.6	37.7	4.8	37.8	5.0	38.0	4.6	38.5	4.7	35.7	4.4
	13	12	39.4	4.7	39.4	4.9	39.5	5.1	39.6	4.6	37.9	4.4	37.6	4.5
	15	14	40.0	4.7	40.0	4.9	40.1	5.0	40.3	4.5	39.0	4.5	39.1	4.5
	17	15	40.9	4.7	40.5	4.9	40.2	5.0	40.0	4.4	39.8	4.4	39.1	4.4
	19	18	42.4	4.8	42.0	5.0	41.7	5.1	41.5	4.4	42.1	4.5	39.1	4.1
	22	20	43.6	4.8	43.1	5.0	42.8	5.1	42.6	4.4	42.1	4.3	39.1	4.0
	26	24	46.0	5.0	45.6	5.1	45.9	5.2	44.0	4.3	42.1	4.1	39.1	3.8
	30	28	48.4	5.0	48.9	5.2	45.9	4.9	44.0	4.1	42.1	3.9	39.1	3.6
	35	32	50.9	5.1	48.9	4.9	45.9	4.5	44.0	3.9	42.1	3.7	39.1	3.4
	39	36	52.8	5.0	48.9	4.5	45.9	4.2	44.0	3.7	42.1	3.5	39.1	3.2
	44	40	52.8	4.6	48.9	4.2	45.9	3.9	44.0	3.5	42.1	3.3	39.1	3.0
	47	43	52.8	4.3	48.9	3.9	45.9	3.6	44.0	3.3	42.1	3.1	39.1	2.8
	51	47	52.8	4.0	48.9	3.6	45.9	3.3	44.0	3.0	42.1	2.9	39.1	2.7
	54	50	52.8	3.7	48.9	3.4	45.9	3.1	44.0	2.9	42.1	2.7	39.1	2.5
	57	53	52.8	3.5	48.9	3.1	45.9	2.9	44.0	2.7	42.1	2.6	39.1	2.4
	60	56	52.8	3.2	48.9	2.9	45.9	2.7	44.0	2.6	42.1	2.5	39.1	2.3

Manufacturer reserves the right to change, at any time, specifications and designs without notice and without obligations.

CR	Outdoor Air Temperature		3 Ton Heating Capacity - Indoor Air Temperature °F DB											
			61		65		68		70		72		75	
			TC	PI	TC	PI	TC	PI	TC	PI	TC	PI	TC	PI
	°F DB	°C WB	kW	kW	kW	kW	kW	kW	kW	kW	kW	kW	kW	kW
100%	-22	-23	20.6	3.8	20.3	3.9	20.4	4.0	20.5	4.0	20.8	4.1	20.6	4.1
	-13	-14	24.9	3.9	24.7	4.1	24.7	4.2	24.8	4.2	25.2	4.3	25.0	4.3
	-4	-4	30.0	4.2	30.0	4.4	30.0	4.6	30.2	4.4	30.7	4.6	30.8	4.7
	-2	-2	31.4	4.4	31.4	4.5	31.4	4.7	31.6	4.5	31.7	4.5	31.7	4.6
	6	5	35.5	4.6	35.5	4.8	35.5	5.0	35.7	4.6	35.7	4.7	35.5	4.8
	10	8	37.4	4.7	37.4	4.9	37.5	5.1	37.7	4.7	38.2	4.8	35.5	4.5
	13	12	39.1	4.8	39.1	5.0	39.2	5.1	39.4	4.7	38.2	4.6	35.5	4.2
	15	14	39.7	4.8	39.7	5.0	39.8	5.1	40.0	4.6	38.2	4.4	35.5	4.1
	17	15	40.6	4.8	40.2	5.0	39.9	5.1	40.0	4.5	38.2	4.2	35.5	3.9
	19	18	42.1	4.9	41.7	5.1	41.8	5.2	40.0	4.2	38.2	4.0	35.5	3.7
	22	20	43.2	5.0	42.8	5.1	41.8	5.0	40.0	4.1	38.2	3.9	35.5	3.6
	26	24	45.7	5.1	44.5	5.0	41.8	4.6	40.0	3.9	38.2	3.7	35.5	3.4
	30	28	48.0	5.1	44.5	4.6	41.8	4.3	40.0	3.6	38.2	3.4	35.5	3.2
	35	32	48.0	4.7	44.5	4.3	41.8	4.0	40.0	3.4	38.2	3.3	35.5	3.0
	39	36	48.0	4.4	44.5	4.0	41.8	3.7	40.0	3.2	38.2	3.1	35.5	2.8
	44	40	48.0	4.0	44.5	3.7	41.8	3.4	40.0	3.0	38.2	2.9	35.5	2.7
	47	43	48.0	3.8	44.5	3.4	41.8	3.2	40.0	2.9	38.2	2.7	35.5	2.5
	51	47	48.0	3.5	44.5	3.2	41.8	2.9	40.0	2.7	38.2	2.6	35.5	2.4
	54	50	48.0	3.2	44.5	3.0	41.8	2.8	40.0	2.6	38.2	2.4	35.5	2.2
	57	53	48.0	3.0	44.5	2.8	41.8	2.6	40.0	2.4	38.2	2.3	35.5	2.1
	60	56	48.0	2.8	44.5	2.6	41.8	2.4	40.0	2.3	38.2	2.2	35.5	2.0
90%	-22	-23	20.6	3.8	20.4	3.9	20.4	4.1	20.5	4.0	20.8	4.1	20.6	4.2
	-13	-14	24.8	4.0	24.5	4.1	24.6	4.3	24.7	4.2	25.1	4.3	24.9	4.4
	-4	-4	29.8	4.3	29.8	4.5	29.9	4.7	30.0	4.5	30.6	4.6	30.7	4.8
	-2	-2	31.2	4.4	31.2	4.6	31.2	4.8	31.4	4.5	31.5	4.6	31.5	4.7
	6	5	35.2	4.7	35.2	4.9	35.3	5.1	35.4	4.7	35.4	4.8	33.7	4.5
	10	8	37.1	4.8	37.1	5.0	37.2	5.2	37.8	4.8	36.8	4.6	32.0	4.0
	13	12	38.7	4.9	38.8	5.1	38.7	5.2	37.4	4.4	34.4	4.0	32.0	3.7
	15	14	39.4	4.9	39.4	5.1	38.2	5.0	37.0	4.2	34.4	3.9	32.0	3.6
	17	15	40.3	4.9	40.0	5.1	37.6	4.8	36.0	3.9	34.4	3.7	32.0	3.4
	19	18	41.7	5.0	40.0	4.9	37.6	4.6	36.0	3.7	34.4	3.5	32.0	3.3
	22	20	43.2	5.1	40.0	4.7	37.6	4.4	36.0	3.6	34.4	3.4	32.0	3.1
	26	24	43.2	4.8	40.0	4.4	37.6	4.1	36.0	3.4	34.4	3.2	32.0	3.0
	30	28	43.2	4.4	40.0	4.1	37.6	3.8	36.0	3.2	34.4	3.0	32.0	2.8
	35	32	43.2	4.1	40.0	3.8	37.6	3.5	36.0	3.0	34.4	2.9	32.0	2.7
	39	36	43.2	3.8	40.0	3.5	37.6	3.2	36.0	2.9	34.4	2.7	32.0	2.5
	44	40	43.2	3.5	40.0	3.2	37.6	3.0	36.0	2.7	34.4	2.6	32.0	2.4
	47	43	43.2	3.3	40.0	3.0	37.6	2.8	36.0	2.6	34.4	2.4	32.0	2.3
	51	47	43.2	3.0	40.0	2.8	37.6	2.6	36.0	2.4	34.4	2.3	32.0	2.1
	54	50	43.2	2.8	40.0	2.6	37.6	2.4	36.0	2.3	34.4	2.1	32.0	2.0
	57	53	43.2	2.6	40.0	2.4	37.6	2.3	36.0	2.1	34.4	2.0	32.0	1.9
	60	56	43.2	2.5	40.0	2.3	37.6	2.1	36.0	2.0	34.4	1.9	32.0	1.8
80%	-22	-23	20.6	3.9	20.4	4.0	20.4	4.1	20.5	4.1	20.8	4.2	20.7	4.2
	-13	-14	24.7	4.1	24.4	4.2	24.5	4.4	24.6	4.3	25.0	4.4	24.8	4.5
	-4	-4	29.6	4.4	29.6	4.6	29.7	4.8	29.8	4.6	30.4	4.7	30.2	4.8
	-2	-2	30.9	4.5	30.9	4.7	31.0	4.9	31.1	4.6	31.3	4.7	30.1	4.5
	6	5	34.9	4.8	34.9	5.0	34.7	5.1	33.5	4.5	32.2	4.3	30.0	4.0
	10	8	36.8	4.9	36.7	5.1	34.8	4.8	33.6	4.2	32.7	4.0	28.4	3.5
	13	12	38.8	5.1	36.3	4.7	34.4	4.5	33.3	3.9	30.6	3.5	28.4	3.3
	15	14	38.3	4.8	35.9	4.5	34.0	4.3	32.9	3.7	30.6	3.4	28.4	3.1
	17	15	38.4	4.7	35.6	4.4	33.4	4.1	32.0	3.4	30.6	3.3	28.4	3.0
	19	18	38.4	4.6	35.6	4.2	33.4	4.0	32.0	3.2	30.6	3.1	28.4	2.8
	22	20	38.4	4.4	35.6	4.1	33.4	3.8	32.0	3.1	30.6	3.0	28.4	2.7
	26	24	38.4	4.1	35.6	3.8	33.4	3.5	32.0	2.9	30.6	2.8	28.4	2.6
	30	28	38.4	3.8	35.6	3.5	33.4	3.3	32.0	2.8	30.6	2.7	28.4	2.5
	35	32	38.4	3.5	35.6	3.2	33.4	3.0	32.0	2.6	30.6	2.5	28.4	2.4
	39	36	38.4	3.2	35.6	3.0	33.4	2.8	32.0	2.5	30.6	2.4	28.4	2.2
	44	40	38.4	3.0	35.6	2.8	33.4	2.6	32.0	2.4	30.6	2.3	28.4	2.1
	47	43	38.4	2.8	35.6	2.6	33.4	2.4	32.0	2.2	30.6	2.1	28.4	2.0
	51	47	38.4	2.6	35.6	2.4	33.4	2.2	32.0	2.1	30.6	2.0	28.4	1.8
	54	50	38.4	2.4	35.6	2.2	33.4	2.1	32.0	2.0	30.6	1.9	28.4	1.7
	57	53	38.4	2.3	35.6	2.1	33.4	2.0	32.0	1.8	30.6	1.8	28.4	1.6
	60	56	38.4	2.1	35.6	2.0	33.4	1.8	32.0	1.7	30.6	1.7	28.4	1.5

Manufacturer reserves the right to change, at any time, specifications and designs without notice and without obligations.

CR	Outdoor Air Temperature		3 Ton Heating Capacity - Indoor Air Temperature °F DB											
			61		65		68		70		72		75	
			TC	PI	TC	PI	TC	PI	TC	PI	TC	PI	TC	PI
	°F DB	°C WB	kW	kW	kW	kW	kW	kW	kW	kW	kW	kW	kW	kW
70%	-22	-23	20.6	3.9	20.4	4.1	20.4	4.2	20.5	4.1	20.8	4.2	20.7	4.3
	-13	-14	24.5	4.2	24.3	4.3	24.3	4.5	24.4	4.4	24.8	4.5	24.6	4.6
	-4	-4	29.3	4.5	29.3	4.7	29.8	5.0	28.8	4.5	28.2	4.4	26.4	4.1
	-2	-2	30.6	4.7	30.6	4.9	30.2	4.9	29.2	4.4	28.2	4.2	26.4	3.9
	6	5	34.2	4.9	32.0	4.6	30.4	4.4	29.4	3.9	28.2	3.7	26.2	3.4
	10	8	34.3	4.6	32.1	4.3	30.4	4.1	29.4	3.6	28.7	3.5	24.9	3.0
	13	12	34.0	4.3	31.8	4.1	30.1	3.9	29.1	3.3	26.8	3.0	24.9	2.8
	15	14	33.5	4.1	31.4	3.9	29.7	3.7	28.8	3.1	26.8	2.9	24.9	2.7
	17	15	33.6	4.0	31.1	3.8	29.2	3.5	28.0	2.9	26.8	2.8	24.9	2.6
	19	18	33.6	3.9	31.1	3.6	29.2	3.4	28.0	2.8	26.8	2.7	24.9	2.5
	22	20	33.6	3.8	31.1	3.5	29.2	3.3	28.0	2.7	26.8	2.6	24.9	2.4
	26	24	33.6	3.5	31.1	3.2	29.2	3.0	28.0	2.5	26.8	2.4	24.9	2.3
	30	28	33.6	3.2	31.1	3.0	29.2	2.8	28.0	2.4	26.8	2.3	24.9	2.2
	35	32	33.6	3.0	31.1	2.8	29.2	2.6	28.0	2.3	26.8	2.2	24.9	2.1
	39	36	33.6	2.8	31.1	2.6	29.2	2.5	28.0	2.2	26.8	2.1	24.9	1.9
	44	40	33.6	2.6	31.1	2.4	29.2	2.2	28.0	2.0	26.8	1.9	24.9	1.8
	47	43	33.6	2.4	31.1	2.2	29.2	2.1	28.0	1.9	26.8	1.8	24.9	1.7
	51	47	33.6	2.2	31.1	2.0	29.2	1.9	28.0	1.8	26.8	1.7	24.9	1.6
	54	50	33.6	2.1	31.1	1.9	29.2	1.8	28.0	1.7	26.8	1.6	24.9	1.5
	57	53	33.6	1.9	31.1	1.8	29.2	1.7	28.0	1.6	26.8	1.5	24.9	1.4
	60	56	33.6	1.8	31.1	1.7	29.2	1.6	28.0	1.5	26.8	1.4	24.9	1.3
60%	-22	-23	20.5	4.0	20.3	4.1	20.3	4.3	20.7	4.3	20.2	4.1	18.7	3.8
	-13	-14	24.2	4.3	24.0	4.4	24.1	4.6	24.5	4.6	23.9	4.4	22.2	4.1
	-4	-4	28.8	4.6	27.0	4.4	25.6	4.2	24.7	3.8	24.2	3.7	22.7	3.5
	-2	-2	29.2	4.6	27.3	4.3	25.9	4.1	25.0	3.7	24.2	3.6	22.6	3.3
	6	5	29.3	4.1	27.5	3.8	26.0	3.7	25.2	3.3	24.1	3.1	22.5	2.9
	10	8	29.4	3.9	27.5	3.6	26.1	3.5	25.2	3.0	24.6	2.9	21.3	2.6
	13	12	29.1	3.6	27.2	3.4	25.8	3.3	25.0	2.8	22.9	2.6	21.3	2.4
	15	14	28.7	3.4	26.9	3.3	25.5	3.1	24.7	2.7	22.9	2.5	21.3	2.3
	17	15	28.8	3.4	26.7	3.2	25.1	3.0	24.0	2.5	22.9	2.4	21.3	2.2
	19	18	28.8	3.2	26.7	3.0	25.1	2.9	24.0	2.4	22.9	2.3	21.3	2.1
	22	20	28.8	3.1	26.7	3.0	25.1	2.8	24.0	2.3	22.9	2.2	21.3	2.1
	26	24	28.8	2.9	26.7	2.7	25.1	2.6	24.0	2.2	22.9	2.1	21.3	2.0
	30	28	28.8	2.7	26.7	2.6	25.1	2.4	24.0	2.1	22.9	2.0	21.3	1.9
	35	32	28.8	2.5	26.7	2.4	25.1	2.2	24.0	2.0	22.9	1.9	21.3	1.8
	39	36	28.8	2.4	26.7	2.2	25.1	2.1	24.0	1.9	22.9	1.8	21.3	1.7
	44	40	28.8	2.2	26.7	2.0	25.1	1.9	24.0	1.7	22.9	1.6	21.3	1.5
	47	43	28.8	2.0	26.7	1.9	25.1	1.8	24.0	1.6	22.9	1.5	21.3	1.4
	51	47	28.8	1.8	26.7	1.7	25.1	1.6	24.0	1.5	22.9	1.4	21.3	1.3
	54	50	28.8	1.7	26.7	1.6	25.1	1.5	24.0	1.4	22.9	1.3	21.3	1.2
	57	53	28.8	1.6	26.7	1.5	25.1	1.4	24.0	1.3	22.9	1.3	21.3	1.2
	60	56	28.8	1.5	26.7	1.4	25.1	1.3	24.0	1.3	22.9	1.2	21.3	1.1
50%	-22	-23	20.4	4.1	18.9	3.9	17.9	3.7	17.3	3.5	16.9	3.4	15.7	3.1
	-13	-14	24.0	4.5	22.2	4.2	21.1	4.0	20.4	3.8	19.9	3.7	18.5	3.4
	-4	-4	24.0	3.8	22.5	3.6	21.3	3.4	20.6	3.2	20.2	3.1	18.9	2.9
	-2	-2	24.3	3.7	22.8	3.5	21.6	3.4	20.9	3.0	20.1	2.9	18.8	2.8
	6	5	24.5	3.3	22.9	3.2	21.7	3.0	21.0	2.7	20.1	2.6	18.7	2.4
	10	8	24.5	3.2	22.9	3.0	21.7	2.9	21.0	2.5	20.5	2.5	17.8	2.1
	13	12	24.3	3.0	22.7	2.8	21.5	2.7	20.8	2.3	19.1	2.2	17.8	2.0
	15	14	24.0	2.8	22.4	2.7	21.2	2.6	20.6	2.2	19.1	2.1	17.8	1.9
	17	15	24.0	2.8	22.2	2.6	20.9	2.5	20.0	2.1	19.1	2.0	17.8	1.9
	19	18	24.0	2.7	22.2	2.5	20.9	2.4	20.0	2.0	19.1	1.9	17.8	1.8
	22	20	24.0	2.6	22.2	2.5	20.9	2.3	20.0	1.9	19.1	1.8	17.8	1.7
	26	24	24.0	2.4	22.2	2.3	20.9	2.2	20.0	1.8	19.1	1.7	17.8	1.6
	30	28	24.0	2.3	22.2	2.1	20.9	2.0	20.0	1.7	19.1	1.7	17.8	1.6
	35	32	24.0	2.1	22.2	2.0	20.9	1.9	20.0	1.6	19.1	1.6	17.8	1.5
	39	36	24.0	2.0	22.2	1.8	20.9	1.7	20.0	1.6	19.1	1.5	17.8	1.4
	44	40	24.0	1.7	22.2	1.6	20.9	1.5	20.0	1.4	19.1	1.3	17.8	1.3
	47	43	24.0	1.6	22.2	1.5	20.9	1.5	20.0	1.3	19.1	1.3	17.8	1.2
	51	47	24.0	1.5	22.2	1.4	20.9	1.3	20.0	1.2	19.1	1.2	17.8	1.1
	54	50	24.0	1.4	22.2	1.3	20.9	1.2	20.0	1.1	19.1	1.1	17.8	1.0
	57	53	24.0	1.3	22.2	1.2	20.9	1.1	20.0	1.1	19.1	1.0	17.8	1.0
	60	56	24.0	1.2	22.2	1.1	20.9	1.1	20.0	1.0	19.1	1.0	17.8	0.9

LEGEND:
CR: Combination ratio
TC: Total capacity (kBtu/h)
PI: Power input (compressor + outdoor fan motor) (kBtu/h)
kW: kilo Watts

NOTE:
Shaded cells indicate rating condition.

Table 19 — 4 Ton Capacity

CR	Outdoor Air Temperature		4 Ton Heating Capacity - Indoor Air Temperature °F DB											
			61		65		68		70		72		75	
			TC	PI	TC	PI	TC	PI	TC	PI	TC	PI	TC	PI
	°F DB	°C WB	kW	kW	kW	kW	kW	kW	kW	kW	kW	kW	kW	kW
130%	-22	-23	22.8	3.9	22.5	4.0	22.5	4.2	22.6	4.1	22.9	4.2	22.8	4.3
	-13	-14	28.1	4.0	27.8	4.1	27.8	4.3	27.9	4.2	28.3	4.4	28.1	4.4
	-4	-4	33.7	4.3	33.7	4.5	33.7	4.6	33.9	4.5	34.5	4.6	34.5	4.7
	-2	-2	35.2	4.4	35.2	4.6	35.3	4.7	35.4	4.5	35.5	4.6	35.5	4.7
	6	5	40.6	4.5	40.6	4.7	40.7	4.9	40.9	4.9	40.0	4.7	39.8	4.8
	10	8	43.0	4.6	43.0	4.8	43.0	4.9	43.2	4.9	43.0	4.8	39.8	4.5
	13	12	44.9	4.6	44.9	4.8	45.0	4.9	45.2	4.8	42.4	4.5	42.0	4.6
	15	14	44.8	4.5	44.8	4.7	44.9	4.9	45.1	4.6	43.6	4.5	43.3	4.6
	17	15	45.8	4.5	45.4	4.6	45.0	4.7	44.8	4.5	44.6	4.5	44.2	4.6
	19	18	47.5	4.5	47.0	4.6	46.7	4.7	46.4	4.4	46.2	4.5	45.8	4.6
	22	20	48.9	4.9	48.4	5.1	48.0	5.2	47.8	4.5	47.5	4.5	47.1	4.6
	26	24	51.6	5.0	51.1	5.1	50.7	5.2	50.5	4.6	50.2	4.7	49.9	4.7
	30	28	54.3	5.1	53.8	5.2	53.4	5.3	53.1	4.7	52.9	4.8	52.4	4.9
	35	32	57.0	5.1	56.5	5.2	56.1	5.3	55.8	4.9	55.5	4.9	55.1	5.0
	39	36	59.8	5.2	59.3	5.3	58.8	5.4	58.5	5.0	58.2	5.1	57.7	5.1
	44	40	62.7	5.2	62.1	5.3	61.6	5.4	61.3	5.2	62.1	5.3	57.7	4.8
	47	43	64.9	5.2	64.3	5.4	63.8	5.5	63.5	5.3	62.1	5.1	57.7	4.6
	51	47	67.9	5.3	67.2	5.4	67.9	5.6	65.0	5.1	62.1	4.8	57.7	4.3
	54	50	70.2	5.3	69.5	5.4	67.9	5.3	65.0	4.8	62.1	4.5	57.7	4.1
	57	53	72.6	5.3	72.3	5.4	67.9	5.0	65.0	4.6	62.1	4.3	57.7	3.9
	60	56	74.8	5.4	72.3	5.1	67.9	4.7	65.0	4.3	62.1	4.1	57.7	3.7
120%	-22	-23	22.8	3.9	22.5	4.0	22.6	4.2	22.7	4.1	23.0	4.2	22.8	4.3
	-13	-14	28.0	4.0	27.6	4.2	27.7	4.3	27.8	4.3	28.2	4.4	28.0	4.5
	-4	-4	33.5	4.3	33.5	4.5	33.6	4.7	33.7	4.5	34.3	4.7	34.4	4.8
	-2	-2	35.1	4.4	35.1	4.6	35.1	4.8	35.3	4.6	35.4	4.6	35.4	4.7
	6	5	40.5	4.6	40.5	4.8	40.5	4.9	40.7	5.0	39.8	4.8	39.7	4.9
	10	8	42.8	4.6	42.8	4.8	42.9	5.0	43.1	5.0	42.8	4.8	39.6	4.6
	13	12	44.7	4.6	44.7	4.8	44.8	5.0	45.0	4.8	42.2	4.6	41.9	4.7
	15	14	44.6	4.6	44.6	4.8	44.7	4.9	44.9	4.7	43.5	4.6	43.1	4.7
	17	15	45.6	4.5	45.2	4.7	44.9	4.8	44.6	4.5	44.4	4.6	44.0	4.6
	19	18	47.3	4.5	46.8	4.7	46.5	4.8	46.2	4.5	46.0	4.5	45.6	4.6
	22	20	48.5	5.0	48.1	5.2	47.7	5.2	47.5	4.5	47.2	4.6	46.9	4.7
	26	24	51.3	5.1	50.8	5.2	50.4	5.3	50.2	4.7	49.9	4.7	49.5	4.8
	30	28	53.9	5.2	53.4	5.3	53.0	5.4	52.8	4.8	52.5	4.9	52.1	4.9
	35	32	56.7	5.2	56.1	5.3	55.7	5.4	55.4	5.0	55.1	5.0	53.3	4.8
	39	36	59.4	5.3	58.9	5.4	58.4	5.5	58.1	5.1	57.3	5.0	53.3	4.6
	44	40	62.3	5.3	61.7	5.5	61.2	5.5	60.0	5.1	57.3	4.8	53.3	4.3
	47	43	64.5	5.3	63.8	5.5	62.7	5.4	60.0	4.8	57.3	4.5	53.3	4.1
	51	47	67.4	5.4	66.7	5.4	62.7	5.0	60.0	4.5	57.3	4.2	53.3	3.8
	54	50	69.7	5.4	66.7	5.1	62.7	4.7	60.0	4.3	57.3	4.0	53.3	3.6
	57	53	72.0	5.4	66.7	4.8	62.7	4.4	60.0	4.1	57.3	3.8	53.3	3.4
	60	56	72.0	5.0	66.7	4.5	62.7	4.1	60.0	3.8	57.3	3.6	53.3	3.2
110%	-22	-23	22.8	3.9	22.6	4.1	22.6	4.2	22.7	4.1	23.0	4.3	22.8	4.3
	-13	-14	27.8	4.1	27.5	4.2	27.5	4.4	27.7	4.3	28.1	4.4	27.8	4.5
	-4	-4	33.4	4.4	33.4	4.6	33.4	4.7	33.6	4.6	34.2	4.7	34.2	4.8
	-2	-2	34.9	4.5	34.9	4.7	35.0	4.9	35.1	4.6	35.3	4.7	35.2	4.8
	6	5	40.3	4.6	40.3	4.8	40.4	5.0	40.6	5.0	39.7	4.8	39.5	4.9
	10	8	42.6	4.7	42.6	4.9	42.7	5.1	42.9	5.0	42.6	4.9	39.5	4.7
	13	12	44.5	4.7	44.5	4.9	44.6	5.1	44.8	4.9	42.0	4.7	41.7	4.7
	15	14	44.3	4.7	44.3	4.9	44.4	5.0	44.6	4.8	43.2	4.7	42.9	4.7
	17	15	45.3	4.6	44.9	4.8	44.6	4.9	44.3	4.6	44.1	4.6	43.8	4.7
	19	18	46.9	4.6	46.5	4.8	46.1	4.9	45.9	4.6	45.7	4.6	45.3	4.7
	22	20	48.2	5.1	47.7	5.2	47.4	5.3	47.1	4.6	46.9	4.7	46.5	4.7
	26	24	50.9	5.2	50.4	5.3	50.0	5.4	49.8	4.8	49.5	4.8	48.8	4.8
	30	28	53.5	5.3	53.0	5.4	52.6	5.5	52.4	4.9	52.6	5.0	48.8	4.5
	35	32	56.2	5.3	55.7	5.4	55.3	5.5	55.0	5.0	52.6	4.7	48.8	4.3
	39	36	59.0	5.4	58.4	5.5	57.4	5.4	55.0	4.8	52.6	4.5	48.8	4.1
	44	40	61.8	5.4	61.2	5.5	57.4	5.0	55.0	4.5	52.6	4.2	48.8	3.8
	47	43	63.9	5.5	61.2	5.2	57.4	4.7	55.0	4.3	52.6	4.0	48.8	3.7
	51	47	66.0	5.3	61.2	4.8	57.4	4.4	55.0	4.0	52.6	3.7	48.8	3.4
	54	50	66.0	5.0	61.2	4.5	57.4	4.1	55.0	3.8	52.6	3.5	48.8	3.2
	57	53	66.0	4.7	61.2	4.2	57.4	3.9	55.0	3.6	52.6	3.3	48.8	3.0
	60	56	66.0	4.4	61.2	4.0	57.4	3.6	55.0	3.4	52.6	3.2	48.8	2.9

Manufacturer reserves the right to change, at any time, specifications and designs without notice and without obligations.

CR	Outdoor Air Temperature		4 Ton Heating Capacity - Indoor Air Temperature °F DB											
			61		65		68		70		72		75	
			TC	PI	TC	PI	TC	PI	TC	PI	TC	PI	TC	PI
	°F DB	°C WB	kW	kW	kW	kW	kW	kW	kW	kW	kW	kW	kW	kW
100%	-22	-23	22.8	3.9	22.6	4.1	22.6	4.2	22.7	4.2	23.0	4.3	22.8	4.3
	-13	-14	27.7	4.1	27.4	4.3	27.4	4.4	27.5	4.4	27.9	4.5	27.7	4.5
	-4	-4	33.2	4.4	33.2	4.6	33.3	4.8	33.4	4.6	34.0	4.8	34.1	4.9
	-2	-2	34.8	4.6	34.8	4.8	34.8	4.9	35.0	4.7	35.1	4.7	35.1	4.9
	6	5	40.1	4.7	40.1	4.9	40.2	5.1	40.4	5.1	39.5	4.9	39.3	5.0
	10	8	42.3	4.8	42.3	5.0	42.4	5.2	42.6	5.1	42.4	5.0	39.3	4.7
	13	12	44.2	4.8	44.2	5.0	44.3	5.2	44.5	5.0	41.7	4.7	41.4	4.8
	15	14	44.0	4.7	44.0	4.9	44.1	5.1	44.3	4.8	42.9	4.8	42.6	4.8
	17	15	45.0	4.7	44.5	4.8	44.2	5.0	44.0	4.7	43.8	4.7	43.4	4.8
	19	18	46.6	4.7	46.1	4.9	45.8	5.0	45.5	4.7	45.3	4.7	44.4	4.6
	22	20	47.8	5.2	47.4	5.4	47.0	5.4	46.8	4.7	46.5	4.7	44.4	4.5
	26	24	50.5	5.3	50.0	5.4	49.6	5.5	50.0	4.9	47.8	4.6	44.4	4.2
	30	28	53.1	5.4	52.6	5.5	52.2	5.5	50.0	4.7	47.8	4.4	44.4	4.0
	35	32	55.7	5.5	55.6	5.6	52.2	5.1	50.0	4.4	47.8	4.2	44.4	3.8
	39	36	58.4	5.5	55.6	5.2	52.2	4.8	50.0	4.2	47.8	3.9	44.4	3.6
	44	40	60.0	5.3	55.6	4.8	52.2	4.4	50.0	3.9	47.8	3.7	44.4	3.4
	47	43	60.0	5.0	55.6	4.5	52.2	4.1	50.0	3.8	47.8	3.5	44.4	3.2
	51	47	60.0	4.6	55.6	4.2	52.2	3.8	50.0	3.5	47.8	3.3	44.4	3.0
	54	50	60.0	4.3	55.6	3.9	52.2	3.6	50.0	3.3	47.8	3.1	44.4	2.8
	57	53	60.0	4.0	55.6	3.6	52.2	3.3	50.0	3.1	47.8	2.9	44.4	2.7
	60	56	60.0	3.8	55.6	3.4	52.2	3.1	50.0	2.9	47.8	2.8	44.4	2.6
90%	-22	-23	22.9	4.0	22.6	4.1	22.6	4.3	22.7	4.2	23.1	4.3	22.9	4.4
	-13	-14	27.6	4.2	27.2	4.3	27.3	4.5	27.4	4.4	27.8	4.5	27.6	4.6
	-4	-4	33.1	4.5	33.1	4.7	33.1	4.9	33.3	4.7	33.9	4.9	33.9	5.0
	-2	-2	34.6	4.6	34.6	4.8	34.7	5.0	34.8	4.8	35.0	4.8	34.9	4.9
	6	5	39.0	4.9	39.0	5.1	39.1	5.3	39.3	5.0	39.2	5.0	39.0	5.1
	10	8	41.2	5.0	41.2	5.2	41.2	5.4	41.4	5.0	42.0	5.1	38.9	4.8
	13	12	42.9	5.1	42.9	5.3	43.0	5.5	43.2	5.0	41.3	4.8	39.9	4.7
	15	14	43.6	5.1	43.6	5.3	43.7	5.5	43.9	5.0	43.0	4.9	39.9	4.5
	17	15	44.6	5.2	44.2	5.3	43.8	5.5	43.6	4.8	43.0	4.7	39.9	4.3
	19	18	46.2	5.3	45.7	5.4	45.3	5.6	45.0	4.7	43.0	4.4	39.9	4.1
	22	20	47.4	5.3	46.9	5.5	47.0	5.6	45.0	4.5	43.0	4.3	39.9	3.9
	26	24	50.0	5.5	50.1	5.6	47.0	5.2	45.0	4.3	43.0	4.1	39.9	3.7
	30	28	52.6	5.5	50.1	5.2	47.0	4.8	45.0	4.1	43.0	3.8	39.9	3.5
	35	32	54.0	5.3	50.1	4.8	47.0	4.5	45.0	3.9	43.0	3.6	39.9	3.3
	39	36	54.0	4.9	50.1	4.5	47.0	4.1	45.0	3.6	43.0	3.4	39.9	3.1
	44	40	54.0	4.6	50.1	4.2	47.0	3.8	45.0	3.4	43.0	3.2	39.9	3.0
	47	43	54.0	4.3	50.1	3.9	47.0	3.6	45.0	3.3	43.0	3.1	39.9	2.8
	51	47	54.0	4.0	50.1	3.6	47.0	3.3	45.0	3.0	43.0	2.9	39.9	2.6
	54	50	54.0	3.7	50.1	3.3	47.0	3.1	45.0	2.9	43.0	2.7	39.9	2.5
	57	53	54.0	3.4	50.1	3.1	47.0	2.9	45.0	2.7	43.0	2.6	39.9	2.4
	60	56	54.0	3.2	50.1	2.9	47.0	2.7	45.0	2.6	43.0	2.5	39.9	2.2
80%	-22	-23	22.9	4.0	22.6	4.2	22.7	4.3	22.8	4.3	23.1	4.4	22.9	4.4
	-13	-14	27.4	4.3	27.1	4.4	27.2	4.6	27.3	4.5	27.7	4.6	27.5	4.7
	-4	-4	32.8	4.6	32.8	4.8	32.9	5.0	33.1	4.8	33.7	5.0	33.7	5.1
	-2	-2	34.3	4.7	34.3	4.9	34.4	5.1	34.5	4.9	34.7	4.9	34.7	5.0
	6	5	38.6	5.0	38.6	5.2	38.7	5.4	38.9	5.1	38.8	5.1	37.5	4.9
	10	8	40.8	5.2	40.8	5.4	40.8	5.6	41.0	5.1	40.9	5.0	35.5	4.3
	13	12	42.5	5.2	42.5	5.5	43.0	5.7	41.6	4.8	38.2	4.4	35.5	4.1
	15	14	43.2	5.3	43.2	5.5	42.5	5.4	41.1	4.6	38.2	4.2	35.5	3.9
	17	15	44.1	5.3	44.5	5.6	41.8	5.2	40.0	4.3	38.2	4.1	35.5	3.7
	19	18	45.7	5.4	44.5	5.4	41.8	5.0	40.0	4.1	38.2	3.8	35.5	3.5
	22	20	46.9	5.5	44.5	5.2	41.8	4.8	40.0	3.9	38.2	3.7	35.5	3.4
	26	24	48.0	5.3	44.5	4.8	41.8	4.5	40.0	3.7	38.2	3.5	35.5	3.2
	30	28	48.0	4.9	44.5	4.5	41.8	4.1	40.0	3.5	38.2	3.3	35.5	3.0
	35	32	48.0	4.5	44.5	4.1	41.8	3.8	40.0	3.3	38.2	3.1	35.5	2.9
	39	36	48.0	4.2	44.5	3.8	41.8	3.5	40.0	3.1	38.2	3.0	35.5	2.7
	44	40	48.0	3.9	44.5	3.5	41.8	3.3	40.0	2.9	38.2	2.8	35.5	2.6
	47	43	48.0	3.6	44.5	3.3	41.8	3.1	40.0	2.8	38.2	2.7	35.5	2.4
	51	47	48.0	3.3	44.5	3.1	41.8	2.8	40.0	2.6	38.2	2.5	35.5	2.3
	54	50	48.0	3.1	44.5	2.9	41.8	2.7	40.0	2.5	38.2	2.4	35.5	2.2
	57	53	48.0	2.9	44.5	2.7	41.8	2.5	40.0	2.4	38.2	2.2	35.5	2.0
	60	56	48.0	2.7	44.5	2.5	41.8	2.4	40.0	2.2	38.2	2.1	35.5	1.9

Manufacturer reserves the right to change, at any time, specifications and designs without notice and without obligations.

CR	Outdoor Air Temperature		4 Ton Heating Capacity - Indoor Air Temperature °F DB											
			61		65		68		70		72		75	
			TC	PI	TC	PI	TC	PI	TC	PI	TC	PI	TC	PI
	°F DB	°C WB	kW	kW	kW	kW	kW	kW	kW	kW	kW	kW	kW	kW
70%	-22	-23	22.9	4.1	22.6	4.2	22.7	4.4	22.8	4.3	23.1	4.4	23.0	4.5
	-13	-14	27.2	4.4	26.9	4.5	27.0	4.7	27.1	4.6	27.5	4.7	27.3	4.8
	-4	-4	32.5	4.7	32.5	4.9	32.6	5.1	32.7	4.9	33.3	5.1	33.1	5.1
	-2	-2	33.9	4.9	33.9	5.1	34.0	5.3	34.2	5.0	34.3	5.1	33.0	4.8
	6	5	38.2	5.2	38.2	5.4	37.9	5.4	36.7	4.8	35.2	4.6	32.8	4.2
	10	8	40.3	5.3	40.1	5.5	38.0	5.2	36.8	4.5	35.8	4.3	31.1	3.7
	13	12	42.4	5.5	39.7	5.1	37.6	4.8	36.4	4.1	33.5	3.8	31.1	3.5
	15	14	41.9	5.2	39.2	4.9	37.2	4.6	36.0	3.9	33.5	3.6	31.1	3.3
	17	15	42.0	5.1	38.9	4.7	36.5	4.4	35.0	3.7	33.5	3.5	31.1	3.2
	19	18	42.0	4.9	38.9	4.5	36.5	4.3	35.0	3.5	33.5	3.3	31.1	3.0
	22	20	42.0	4.8	38.9	4.4	36.5	4.1	35.0	3.3	33.5	3.2	31.1	2.9
	26	24	42.0	4.5	38.9	4.1	36.5	3.8	35.0	3.1	33.5	3.0	31.1	2.8
	30	28	42.0	4.1	38.9	3.8	36.5	3.5	35.0	3.0	33.5	2.8	31.1	2.6
	35	32	42.0	3.8	38.9	3.5	36.5	3.2	35.0	2.8	33.5	2.7	31.1	2.5
	39	36	42.0	3.5	38.9	3.2	36.5	3.0	35.0	2.7	33.5	2.5	31.1	2.4
	44	40	42.0	3.2	38.9	3.0	36.5	2.8	35.0	2.5	33.5	2.4	31.1	2.2
	47	43	42.0	3.1	38.9	2.8	36.5	2.6	35.0	2.4	33.5	2.3	31.1	2.1
	51	47	42.0	2.8	38.9	2.6	36.5	2.4	35.0	2.2	33.5	2.1	31.1	2.0
	54	50	42.0	2.6	38.9	2.4	36.5	2.3	35.0	2.1	33.5	2.0	31.1	1.9
	57	53	42.0	2.5	38.9	2.3	36.5	2.1	35.0	2.0	33.5	1.9	31.1	1.8
	60	56	42.0	2.3	38.9	2.1	36.5	2.0	35.0	1.9	33.5	1.8	31.1	1.7
60%	-22	-23	22.7	4.2	22.5	4.3	22.6	4.5	22.7	4.4	23.0	4.5	22.9	4.6
	-13	-14	26.9	4.5	26.6	4.6	26.7	4.8	26.8	4.7	27.2	4.9	27.1	4.9
	-4	-4	32.1	4.9	32.1	5.1	32.0	5.2	30.9	4.7	30.2	4.6	28.3	4.3
	-2	-2	33.5	5.1	34.2	5.4	32.4	5.1	31.3	4.6	30.2	4.4	28.3	4.1
	6	5	36.7	5.1	34.3	4.8	32.5	4.6	31.5	4.0	30.2	3.8	28.1	3.5
	10	8	36.8	4.8	34.4	4.5	32.6	4.3	31.5	3.7	30.7	3.6	26.6	3.1
	13	12	36.4	4.5	34.0	4.2	32.3	4.0	31.2	3.5	28.7	3.2	26.6	2.9
	15	14	35.9	4.3	33.6	4.1	31.9	3.9	30.8	3.3	28.7	3.0	26.6	2.8
	17	15	36.0	4.2	33.4	3.9	31.3	3.7	30.0	3.1	28.7	2.9	26.6	2.7
	19	18	36.0	4.1	33.4	3.8	31.3	3.5	30.0	2.9	28.7	2.7	26.6	2.6
	22	20	36.0	3.9	33.4	3.7	31.3	3.4	30.0	2.8	28.7	2.7	26.6	2.5
	26	24	36.0	3.7	33.4	3.4	31.3	3.2	30.0	2.6	28.7	2.5	26.6	2.3
	30	28	36.0	3.4	33.4	3.1	31.3	2.9	30.0	2.5	28.7	2.4	26.6	2.2
	35	32	36.0	3.1	33.4	2.9	31.3	2.7	30.0	2.4	28.7	2.3	26.6	2.1
	39	36	36.0	2.9	33.4	2.7	31.3	2.5	30.0	2.3	28.7	2.2	26.6	2.0
	44	40	36.0	2.7	33.4	2.5	31.3	2.4	30.0	2.1	28.7	2.0	26.6	1.8
	47	43	36.0	2.5	33.4	2.3	31.3	2.2	30.0	2.0	28.7	1.9	26.6	1.8
	51	47	36.0	2.3	33.4	2.2	31.3	2.0	30.0	1.9	28.7	1.8	26.6	1.6
	54	50	36.0	2.2	33.4	2.0	31.3	1.9	30.0	1.8	28.7	1.7	26.6	1.5
	57	53	36.0	2.0	33.4	1.9	31.3	1.8	30.0	1.7	28.7	1.6	26.6	1.5
	60	56	36.0	1.9	33.4	1.8	31.3	1.6	30.0	1.6	28.7	1.5	26.6	1.4
50%	-22	-23	22.5	4.3	22.3	4.4	22.4	4.6	21.7	4.3	21.1	4.1	19.6	3.8
	-13	-14	26.5	4.7	26.3	4.8	26.4	5.0	25.5	4.6	24.9	4.5	23.1	4.2
	-4	-4	30.0	4.7	28.1	4.4	26.6	4.2	25.7	3.9	25.2	3.8	23.6	3.5
	-2	-2	30.4	4.6	28.5	4.4	27.0	4.2	26.1	3.7	25.2	3.6	23.6	3.3
	6	5	30.6	4.1	28.6	3.9	27.1	3.7	26.2	3.3	25.1	3.1	23.4	2.9
	10	8	30.6	3.9	28.7	3.7	27.2	3.5	26.3	3.0	25.6	3.0	22.2	2.6
	13	12	30.3	3.7	28.4	3.4	26.9	3.3	26.0	2.8	23.9	2.6	22.2	2.4
	15	14	29.9	3.5	28.0	3.3	26.6	3.1	25.7	2.7	23.9	2.5	22.2	2.3
	17	15	30.0	3.4	27.8	3.2	26.1	3.0	25.0	2.5	23.9	2.4	22.2	2.2
	19	18	30.0	3.3	27.8	3.1	26.1	2.9	25.0	2.4	23.9	2.3	22.2	2.1
	22	20	30.0	3.2	27.8	3.0	26.1	2.8	25.0	2.3	23.9	2.2	22.2	2.1
	26	24	30.0	3.0	27.8	2.8	26.1	2.6	25.0	2.2	23.9	2.1	22.2	2.0
	30	28	30.0	2.8	27.8	2.6	26.1	2.4	25.0	2.1	23.9	2.0	22.2	1.9
	35	32	30.0	2.6	27.8	2.4	26.1	2.3	25.0	2.0	23.9	1.9	22.2	1.8
	39	36	30.0	2.4	27.8	2.2	26.1	2.1	25.0	1.9	23.9	1.8	22.2	1.7
	44	40	30.0	2.2	27.8	2.0	26.1	1.9	25.0	1.7	23.9	1.6	22.2	1.5
	47	43	30.0	2.0	27.8	1.9	26.1	1.8	25.0	1.6	23.9	1.6	22.2	1.5
	51	47	30.0	1.9	27.8	1.7	26.1	1.6	25.0	1.5	23.9	1.4	22.2	1.3
	54	50	30.0	1.8	27.8	1.6	26.1	1.5	25.0	1.4	23.9	1.4	22.2	1.3
	57	53	30.0	1.6	27.8	1.5	26.1	1.4	25.0	1.3	23.9	1.3	22.2	1.2
	60	56	30.0	1.5	27.8	1.4	26.1	1.3	25.0	1.3	23.9	1.2	22.2	1.1

LEGEND:
CR: Combination ratio
TC: Total capacity (kBtu/h)
PI: Power input (compressor + outdoor fan motor) (kBtu/h)
kW: kilo Watts

NOTE:
Shaded cells indicate rating condition.

Table 20 — 5 Ton Capacity

CR	Outdoor Air Temperature		5 Ton Heating Capacity - Indoor Air Temperature °F DB											
			61		65		68		70		72		75	
			TC	PI	TC	PI	TC	PI	TC	PI	TC	PI	TC	PI
	°F DB	°C WB	kW	kW	kW	kW	kW	kW	kW	kW	kW	kW	kW	kW
130%	-22	-23	23.6	3.6	23.3	3.7	23.3	3.8	23.4	3.8	23.8	3.9	23.6	3.9
	-13	-14	29.1	3.7	28.8	3.8	28.8	3.9	28.9	3.9	29.4	4.0	29.1	4.1
	-4	-4	34.7	4.2	34.7	4.3	34.8	4.5	34.9	4.4	35.6	4.2	35.6	4.3
	-2	-2	36.3	4.5	36.3	4.7	36.3	4.8	36.5	4.6	36.7	4.2	36.6	4.3
	6	5	42.2	4.9	42.2	5.1	42.2	5.3	42.4	5.3	41.1	4.3	40.9	4.4
	10	8	44.1	4.7	44.1	4.9	44.2	5.1	44.4	4.9	44.1	4.4	40.9	4.2
	13	12	46.0	4.7	46.0	4.9	46.1	5.1	46.4	4.7	43.5	4.1	43.1	4.2
	15	14	45.9	4.3	45.9	4.5	46.0	4.7	46.2	4.2	44.8	4.1	44.4	4.2
	17	15	47.0	4.4	46.5	4.5	46.1	4.6	45.9	4.1	45.7	4.1	45.3	4.2
	19	18	48.6	4.4	48.2	4.6	47.8	4.7	47.6	4.1	47.3	4.1	47.0	4.2
	22	20	50.0	4.5	49.5	4.6	49.1	4.7	48.9	4.1	48.7	4.1	48.3	4.2
	26	24	52.9	4.6	52.4	4.7	52.0	4.8	51.7	4.2	51.5	4.2	51.1	4.3
	30	28	55.7	4.6	55.2	4.7	54.8	4.8	54.5	4.3	54.2	4.4	53.8	4.4
	35	32	58.5	4.6	58.0	4.8	57.6	4.8	57.3	4.4	57.0	4.5	56.6	4.6
	39	36	61.4	4.7	60.8	4.8	60.4	4.9	60.1	4.6	59.8	4.6	59.3	4.7
	44	40	64.3	4.7	63.7	4.8	63.2	4.9	62.9	4.7	62.6	4.7	62.1	4.8
	47	43	66.6	4.7	65.9	4.9	65.5	4.9	65.1	4.8	64.8	4.8	64.3	4.9
	51	47	69.6	4.8	68.9	4.9	68.4	5.0	68.1	4.9	67.7	4.9	67.2	5.0
	54	50	71.9	4.8	71.2	4.9	70.7	5.0	70.4	4.9	70.0	5.0	69.2	5.0
	57	53	74.3	4.8	73.6	4.9	73.0	5.0	72.7	5.0	72.3	5.1	69.2	4.7
	60	56	76.6	4.8	75.8	5.0	75.3	5.0	74.9	5.1	74.6	5.0	69.2	4.5
120%	-22	-23	23.6	3.6	23.3	3.7	23.3	3.8	23.5	3.8	23.8	3.9	23.6	3.9
	-13	-14	28.9	3.7	28.6	3.8	28.6	4.0	28.8	3.9	29.2	4.0	28.9	4.1
	-4	-4	34.5	4.2	34.5	4.4	34.6	4.5	34.8	4.4	35.4	4.3	35.4	4.4
	-2	-2	36.1	4.5	36.1	4.7	36.2	4.9	36.3	4.6	36.5	4.2	36.5	4.3
	6	5	42.0	4.9	42.0	5.2	42.1	5.3	42.2	5.4	41.0	4.4	40.8	4.4
	10	8	43.9	4.8	43.9	5.0	44.0	5.2	44.2	5.0	43.9	4.4	40.7	4.2
	13	12	45.9	4.7	45.9	5.0	46.0	5.1	46.2	4.7	43.3	4.2	43.0	4.2
	15	14	45.7	4.4	45.7	4.6	45.8	4.7	46.0	4.3	44.6	4.2	44.2	4.3
	17	15	46.8	4.4	46.3	4.6	46.0	4.7	45.7	4.1	45.5	4.1	45.1	4.2
	19	18	48.5	4.5	48.0	4.6	47.6	4.8	47.4	4.1	47.2	4.1	46.8	4.2
	22	20	49.8	4.5	49.3	4.7	49.0	4.8	48.7	4.1	48.5	4.2	48.1	4.2
	26	24	52.7	4.6	52.2	4.7	51.8	4.8	51.5	4.3	51.3	4.3	50.9	4.4
	30	28	55.4	4.7	54.9	4.8	54.5	4.9	54.2	4.4	53.9	4.4	53.5	4.5
	35	32	58.1	4.7	57.6	4.8	57.2	4.9	56.9	4.5	56.6	4.6	56.2	4.6
	39	36	61.0	4.8	60.4	4.9	59.9	5.0	59.7	4.6	59.4	4.7	58.9	4.8
	44	40	63.8	4.8	63.2	4.9	62.8	5.0	62.5	4.8	62.1	4.8	61.7	4.9
	47	43	66.1	4.8	65.5	4.9	65.0	5.0	64.7	4.9	64.3	4.9	63.9	4.9
	51	47	69.1	4.9	68.4	5.0	67.9	5.1	67.5	5.0	67.2	5.0	63.9	4.6
	54	50	71.4	4.9	70.7	5.0	70.2	5.1	69.8	5.0	68.8	4.9	63.9	4.4
	57	53	73.7	4.9	73.0	5.0	72.5	5.1	72.0	5.0	68.8	4.7	63.9	4.2
	60	56	76.0	4.9	75.3	5.1	75.2	5.1	72.0	4.8	68.8	4.4	63.9	4.0
110%	-22	-23	23.6	3.6	23.3	3.7	23.4	3.9	23.5	3.8	23.8	3.9	23.6	4.0
	-13	-14	28.8	3.7	28.4	3.9	28.5	4.0	28.6	4.0	29.0	4.1	28.8	4.1
	-4	-4	34.4	4.2	34.4	4.4	34.4	4.6	34.6	4.4	35.2	4.3	35.3	4.4
	-2	-2	35.9	4.6	35.9	4.8	36.0	4.9	36.1	4.7	36.3	4.3	36.3	4.4
	6	5	41.8	5.0	41.8	5.2	41.9	5.4	42.1	5.5	40.8	4.4	40.6	4.5
	10	8	43.7	4.9	43.7	5.1	43.8	5.2	44.0	5.0	43.7	4.5	40.5	4.3
	13	12	45.7	4.8	45.7	5.0	45.8	5.2	46.0	4.8	43.1	4.2	42.8	4.3
	15	14	45.5	4.5	45.5	4.6	45.6	4.8	45.8	4.3	44.4	4.2	44.0	4.3
	17	15	46.6	4.5	46.1	4.7	45.8	4.8	45.5	4.2	45.3	4.2	45.0	4.3
	19	18	48.3	4.6	47.8	4.7	47.4	4.8	47.2	4.2	47.0	4.2	46.6	4.3
	22	20	49.5	4.6	49.1	4.8	48.7	4.8	48.5	4.2	48.3	4.2	47.9	4.3
	26	24	52.3	4.7	51.8	4.8	51.4	4.9	51.2	4.3	50.9	4.4	50.5	4.4
	30	28	55.0	4.8	54.5	4.9	54.1	5.0	53.8	4.5	53.5	4.5	53.1	4.6
	35	32	57.7	4.8	57.2	4.9	56.8	5.0	56.5	4.6	56.2	4.6	55.8	4.7
	39	36	60.5	4.9	59.9	5.0	59.5	5.1	59.2	4.7	58.9	4.8	58.6	4.8
	44	40	63.3	4.9	62.7	5.0	62.3	5.1	62.0	4.9	61.6	4.9	58.6	4.6
	47	43	65.6	4.9	64.9	5.1	64.5	5.1	64.1	5.0	63.1	4.8	58.6	4.4
	51	47	68.5	5.0	67.8	5.1	67.3	5.2	66.0	4.8	63.1	4.5	58.6	4.1
	54	50	70.8	5.0	70.1	5.1	68.9	5.0	66.0	4.6	63.1	4.3	58.6	3.9
	57	53	73.1	5.0	73.4	5.2	68.9	4.7	66.0	4.4	63.1	4.1	58.6	3.7
	60	56	75.3	5.1	73.4	4.9	68.9	4.5	66.0	4.2	63.1	3.9	58.6	3.5

Manufacturer reserves the right to change, at any time, specifications and designs without notice and without obligations.

CR	Outdoor Air Temperature		5 Ton Heating Capacity - Indoor Air Temperature °F DB											
			61		65		68		70		72		75	
			TC	PI	TC	PI	TC	PI	TC	PI	TC	PI	TC	PI
	°F DB	°C WB	kW	kW	kW	kW	kW	kW	kW	kW	kW	kW	kW	kW
100%	-22	-23	23.6	3.6	23.3	3.7	23.4	3.9	23.5	3.8	23.8	3.9	23.6	4.0
	-13	-14	28.6	3.8	28.3	3.9	28.3	4.1	28.5	4.0	28.9	4.1	28.6	4.2
	-4	-4	34.2	4.3	34.2	4.5	34.3	4.6	34.4	4.5	35.0	4.4	35.1	4.5
	-2	-2	35.8	4.6	35.7	4.8	35.8	5.0	36.0	4.7	36.1	4.3	36.1	4.4
	6	5	41.6	5.1	41.6	5.3	41.7	5.5	41.9	5.5	40.6	4.5	40.4	4.6
	10	8	43.5	4.9	43.5	5.1	43.6	5.3	43.8	5.1	43.6	4.5	40.4	4.3
	13	12	45.5	4.9	45.5	5.1	45.6	5.3	45.8	4.9	42.9	4.3	42.6	4.4
	15	14	45.3	4.5	45.3	4.7	45.4	4.9	45.6	4.4	44.2	4.3	43.8	4.4
	17	15	46.3	4.6	45.8	4.7	45.5	4.9	45.3	4.2	45.1	4.3	44.7	4.3
	19	18	47.9	4.6	47.4	4.8	47.1	4.9	46.9	4.2	46.6	4.3	46.3	4.3
	22	20	49.2	4.7	48.7	4.9	48.4	4.9	48.1	4.3	47.9	4.3	47.5	4.4
	26	24	51.9	4.8	51.4	4.9	51.0	5.0	50.8	4.4	50.5	4.4	50.1	4.5
	30	28	54.5	4.9	54.0	5.0	53.6	5.1	53.4	4.5	53.1	4.6	53.3	4.7
	35	32	57.2	4.9	56.7	5.0	56.3	5.1	56.0	4.7	55.7	4.7	53.3	4.5
	39	36	60.0	5.0	59.4	5.1	59.0	5.2	58.7	4.8	57.3	4.7	53.3	4.2
	44	40	62.8	5.0	62.2	5.2	62.7	5.3	60.0	4.7	57.3	4.4	53.3	4.0
	47	43	65.0	5.1	64.4	5.2	62.7	5.0	60.0	4.5	57.3	4.2	53.3	3.8
	51	47	67.9	5.1	66.7	5.1	62.7	4.6	60.0	4.2	57.3	4.0	53.3	3.6
	54	50	70.1	5.1	66.7	4.8	62.7	4.4	60.0	4.0	57.3	3.8	53.3	3.4
	57	53	72.0	5.0	66.7	4.5	62.7	4.1	60.0	3.8	57.3	3.6	53.3	3.2
	60	56	72.0	4.7	66.7	4.2	62.7	3.9	60.0	3.6	57.3	3.4	53.3	3.0
90%	-22	-23	23.6	3.6	23.3	3.8	23.4	3.9	23.5	3.8	23.8	3.9	23.6	4.0
	-13	-14	28.4	3.8	28.1	4.0	28.2	4.1	28.3	4.1	28.7	4.2	28.5	4.2
	-4	-4	34.0	4.1	34.0	4.3	34.1	4.4	34.3	4.3	34.9	4.4	34.9	4.5
	-2	-2	35.6	4.2	35.6	4.4	35.6	4.6	35.8	4.3	36.0	4.4	36.0	4.5
	6	5	40.2	4.5	40.2	4.7	40.3	4.8	40.5	4.5	40.4	4.6	40.2	4.6
	10	8	42.4	4.6	42.4	4.8	42.5	4.9	42.7	4.5	43.3	4.6	40.2	4.4
	13	12	44.2	4.6	44.2	4.8	44.3	5.0	44.5	4.5	42.6	4.4	42.3	4.5
	15	14	44.9	4.6	44.9	4.8	45.0	5.0	45.2	4.5	43.8	4.4	43.5	4.5
	17	15	45.9	4.7	45.5	4.8	45.1	4.9	44.9	4.3	44.7	4.4	44.3	4.4
	19	18	47.5	4.7	47.0	4.9	46.7	5.0	46.5	4.3	46.2	4.4	45.9	4.4
	22	20	48.8	4.8	48.3	5.0	47.9	5.0	47.7	4.4	47.5	4.4	47.9	4.5
	26	24	51.4	4.9	50.9	5.0	50.6	5.1	50.3	4.5	50.1	4.5	47.9	4.3
	30	28	54.0	5.0	53.5	5.1	53.1	5.2	52.9	4.7	51.6	4.5	47.9	4.1
	35	32	56.7	5.0	56.2	5.2	56.4	5.3	54.0	4.5	51.6	4.3	47.9	3.9
	39	36	59.4	5.1	60.1	5.3	56.4	4.9	54.0	4.3	51.6	4.0	47.9	3.7
	44	40	62.2	5.2	60.1	5.0	56.4	4.6	54.0	4.1	51.6	3.8	47.9	3.5
	47	43	64.8	5.2	60.1	4.7	56.4	4.3	54.0	3.9	51.6	3.7	47.9	3.3
	51	47	64.8	4.8	60.1	4.4	56.4	4.0	54.0	3.6	51.6	3.4	47.9	3.1
	54	50	64.8	4.5	60.1	4.1	56.4	3.8	54.0	3.4	51.6	3.2	47.9	2.9
	57	53	64.8	4.3	60.1	3.8	56.4	3.5	54.0	3.3	51.6	3.1	47.9	2.8
	60	56	64.8	4.0	60.1	3.6	56.4	3.3	54.0	3.1	51.6	2.9	47.9	2.6
80%	-22	-23	23.6	3.7	23.4	3.8	23.4	3.9	23.5	3.9	23.9	4.0	23.7	4.0
	-13	-14	28.3	3.9	28.0	4.0	28.0	4.2	28.2	4.1	28.6	4.2	28.4	4.3
	-4	-4	33.9	4.2	33.9	4.4	33.9	4.5	34.1	4.4	34.7	4.5	34.8	4.6
	-2	-2	35.4	4.3	35.4	4.5	35.5	4.7	35.6	4.4	35.8	4.5	35.8	4.6
	6	5	39.9	4.6	39.9	4.8	39.9	4.9	40.1	4.6	40.1	4.6	39.9	4.7
	10	8	42.0	4.7	42.0	4.9	42.1	5.0	42.3	4.6	42.9	4.7	39.8	4.5
	13	12	43.8	4.7	43.8	4.9	43.9	5.1	44.1	4.6	42.2	4.5	42.6	4.6
	15	14	44.5	4.7	44.5	4.9	44.6	5.1	44.8	4.6	43.4	4.5	42.6	4.5
	17	15	45.5	4.8	45.0	5.0	44.7	5.1	44.5	4.4	44.2	4.5	42.6	4.3
	19	18	47.0	4.9	46.6	5.0	46.2	5.2	46.0	4.4	45.9	4.4	42.6	4.1
	22	20	48.3	4.9	47.8	5.1	47.4	5.2	48.0	4.5	45.9	4.3	42.6	3.9
	26	24	50.9	5.1	50.4	5.2	50.1	5.2	48.0	4.3	45.9	4.1	42.6	3.7
	30	28	53.5	5.1	53.4	5.3	50.1	4.8	48.0	4.1	45.9	3.9	42.6	3.5
	35	32	56.1	5.2	53.4	4.9	50.1	4.5	48.0	3.9	45.9	3.7	42.6	3.3
	39	36	57.6	5.0	53.4	4.6	50.1	4.2	48.0	3.7	45.9	3.5	42.6	3.2
	44	40	57.6	4.7	53.4	4.2	50.1	3.9	48.0	3.5	45.9	3.3	42.6	3.0
	47	43	57.6	4.4	53.4	4.0	50.1	3.7	48.0	3.3	45.9	3.1	42.6	2.8
	51	47	57.6	4.1	53.4	3.7	50.1	3.4	48.0	3.1	45.9	2.9	42.6	2.6
	54	50	57.6	3.8	53.4	3.4	50.1	3.2	48.0	2.9	45.9	2.7	42.6	2.5
	57	53	57.6	3.6	53.4	3.2	50.1	3.0	48.0	2.7	45.9	2.6	42.6	2.4
	60	56	57.6	3.4	53.4	3.0	50.1	2.8	48.0	2.6	45.9	2.5	42.6	2.3

Manufacturer reserves the right to change, at any time, specifications and designs without notice and without obligations.

CR	Outdoor Air Temperature		5 Ton Heating Capacity - Indoor Air Temperature °F DB											
			61		65		68		70		72		75	
			TC	PI	TC	PI	TC	PI	TC	PI	TC	PI	TC	PI
	°F DB	°C WB	kW	kW	kW	kW	kW	kW	kW	kW	kW	kW	kW	kW
70%	-22	-23	23.6	3.7	23.4	3.9	23.4	4.0	23.5	3.9	23.9	4.0	23.7	4.1
	-13	-14	28.1	4.0	27.8	4.1	27.9	4.3	28.0	4.2	28.4	4.3	28.2	4.4
	-4	-4	33.6	4.3	33.6	4.5	33.7	4.6	33.8	4.5	34.5	4.6	34.5	4.7
	-2	-2	35.1	4.4	35.1	4.6	35.1	4.8	35.3	4.5	35.5	4.6	35.5	4.7
	6	5	39.4	4.7	39.4	4.9	39.5	5.0	39.7	4.7	39.7	4.8	39.3	4.8
	10	8	41.6	4.8	41.6	5.0	41.7	5.2	41.9	4.7	43.0	4.9	37.3	4.2
	13	12	43.3	4.9	43.3	5.1	43.4	5.3	43.7	4.7	40.1	4.3	37.3	3.9
	15	14	43.9	4.9	44.0	5.1	44.6	5.3	43.2	4.5	40.1	4.1	37.3	3.8
	17	15	44.9	5.0	44.5	5.1	43.9	5.1	42.0	4.2	40.1	4.0	37.3	3.6
	19	18	46.5	5.0	46.7	5.3	43.9	4.9	42.0	4.0	40.1	3.8	37.3	3.4
	22	20	47.7	5.1	46.7	5.1	43.9	4.7	42.0	3.8	40.1	3.6	37.3	3.3
	26	24	50.4	5.2	46.7	4.7	43.9	4.4	42.0	3.6	40.1	3.4	37.3	3.2
	30	28	50.4	4.8	46.7	4.4	43.9	4.1	42.0	3.4	40.1	3.3	37.3	3.0
	35	32	50.4	4.5	46.7	4.1	43.9	3.8	42.0	3.3	40.1	3.1	37.3	2.8
	39	36	50.4	4.2	46.7	3.8	43.9	3.5	42.0	3.1	40.1	2.9	37.3	2.7
	44	40	50.4	3.9	46.7	3.5	43.9	3.3	42.0	2.9	40.1	2.7	37.3	2.5
	47	43	50.4	3.6	46.7	3.3	43.9	3.1	42.0	2.8	40.1	2.6	37.3	2.4
	51	47	50.4	3.4	46.7	3.0	43.9	2.8	42.0	2.6	40.1	2.4	37.3	2.2
	54	50	50.4	3.1	46.7	2.8	43.9	2.6	42.0	2.5	40.1	2.3	37.3	2.1
	57	53	50.4	2.9	46.7	2.7	43.9	2.5	42.0	2.3	40.1	2.2	37.3	2.0
	60	56	50.4	2.7	46.7	2.5	43.9	2.3	42.0	2.2	40.1	2.1	37.3	1.9
60%	-22	-23	23.6	3.8	23.3	3.9	23.4	4.1	23.5	4.0	23.9	4.1	23.7	4.2
	-13	-14	27.9	4.1	27.6	4.2	27.7	4.4	27.8	4.3	28.2	4.4	28.1	4.5
	-4	-4	33.2	4.4	33.2	4.6	33.3	4.8	33.4	4.6	34.1	4.8	34.0	4.8
	-2	-2	34.6	4.6	34.7	4.8	34.7	4.9	34.9	4.7	35.1	4.7	33.9	4.6
	6	5	38.9	4.9	38.9	5.1	39.0	5.2	37.7	4.6	36.2	4.3	33.7	4.0
	10	8	41.0	5.0	41.3	5.2	39.1	4.9	37.8	4.2	36.8	4.1	32.0	3.5
	13	12	42.7	5.1	40.8	4.9	38.7	4.6	37.4	3.9	34.4	3.6	32.0	3.3
	15	14	43.1	5.0	40.3	4.7	38.2	4.4	37.0	3.7	34.4	3.4	32.0	3.2
	17	15	43.2	4.9	40.0	4.5	37.6	4.2	36.0	3.5	34.4	3.3	32.0	3.0
	19	18	43.2	4.7	40.0	4.3	37.6	4.1	36.0	3.3	34.4	3.1	32.0	2.9
	22	20	43.2	4.6	40.0	4.2	37.6	3.9	36.0	3.2	34.4	3.0	32.0	2.8
	26	24	43.2	4.3	40.0	3.9	37.6	3.6	36.0	3.0	34.4	2.9	32.0	2.6
	30	28	43.2	4.0	40.0	3.6	37.6	3.4	36.0	2.8	34.4	2.7	32.0	2.5
	35	32	43.2	3.7	40.0	3.4	37.6	3.1	36.0	2.7	34.4	2.6	32.0	2.4
	39	36	43.2	3.4	40.0	3.1	37.6	2.9	36.0	2.5	34.4	2.4	32.0	2.2
	44	40	43.2	3.2	40.0	2.9	37.6	2.7	36.0	2.4	34.4	2.3	32.0	2.1
	47	43	43.2	2.9	40.0	2.7	37.6	2.5	36.0	2.3	34.4	2.2	32.0	2.0
	51	47	43.2	2.7	40.0	2.5	37.6	2.3	36.0	2.1	34.4	2.0	32.0	1.9
	54	50	43.2	2.5	40.0	2.3	37.6	2.2	36.0	2.0	34.4	1.9	32.0	1.8
	57	53	43.2	2.4	40.0	2.2	37.6	2.0	36.0	1.9	34.4	1.8	32.0	1.7
	60	56	43.2	2.2	40.0	2.1	37.6	1.9	36.0	1.8	34.4	1.7	32.0	1.6
50%	-22	-23	23.4	3.9	23.2	4.0	23.2	4.2	23.4	4.1	23.7	4.2	23.5	4.2
	-13	-14	27.5	4.2	27.2	4.4	27.3	4.5	27.5	4.5	27.9	4.6	27.7	4.6
	-4	-4	32.7	4.6	32.7	4.8	32.0	4.7	30.9	4.3	30.2	4.2	28.3	3.9
	-2	-2	34.1	4.8	34.2	4.9	32.4	4.7	31.3	4.2	30.2	4.0	28.3	3.7
	6	5	36.7	4.7	34.3	4.4	32.5	4.2	31.5	3.7	30.2	3.5	28.1	3.3
	10	8	36.8	4.5	34.4	4.2	32.6	4.0	31.5	3.4	30.7	3.3	26.6	2.9
	13	12	36.4	4.2	34.0	3.9	32.3	3.7	31.2	3.2	28.7	2.9	26.6	2.7
	15	14	35.9	4.0	33.6	3.7	31.9	3.6	30.8	3.0	28.7	2.8	26.6	2.6
	17	15	36.0	3.9	33.4	3.6	31.3	3.4	30.0	2.8	28.7	2.7	26.6	2.5
	19	18	36.0	3.8	33.4	3.5	31.3	3.3	30.0	2.7	28.7	2.5	26.6	2.3
	22	20	36.0	3.6	33.4	3.4	31.3	3.1	30.0	2.6	28.7	2.4	26.6	2.3
	26	24	36.0	3.4	33.4	3.1	31.3	2.9	30.0	2.4	28.7	2.3	26.6	2.2
	30	28	36.0	3.2	33.4	2.9	31.3	2.7	30.0	2.3	28.7	2.2	26.6	2.1
	35	32	36.0	2.9	33.4	2.7	31.3	2.5	30.0	2.2	28.7	2.1	26.6	2.0
	39	36	36.0	2.7	33.4	2.5	31.3	2.4	30.0	2.1	28.7	2.0	26.6	1.9
	44	40	36.0	2.5	33.4	2.3	31.3	2.2	30.0	2.0	28.7	1.9	26.6	1.7
	47	43	36.0	2.3	33.4	2.2	31.3	2.0	30.0	1.9	28.7	1.8	26.6	1.6
	51	47	36.0	2.2	33.4	2.0	31.3	1.9	30.0	1.7	28.7	1.6	26.6	1.5
	54	50	36.0	2.0	33.4	1.9	31.3	1.8	30.0	1.6	28.7	1.6	26.6	1.4
	57	53	36.0	1.9	33.4	1.8	31.3	1.6	30.0	1.5	28.7	1.5	26.6	1.4
	60	56	36.0	1.8	33.4	1.6	31.3	1.6	30.0	1.5	28.7	1.4	26.6	1.3

LEGEND:
CR: Combination ratio
TC: Total capacity (kBtu/h)
PI: Power input (compressor + outdoor fan motor) (kBtu/h)
kW: kilo Watts

NOTE: Shaded cells indicate rating condition.

Manufacturer reserves the right to change, at any time, specifications and designs without notice and without obligations.

OPERATING LIMITS

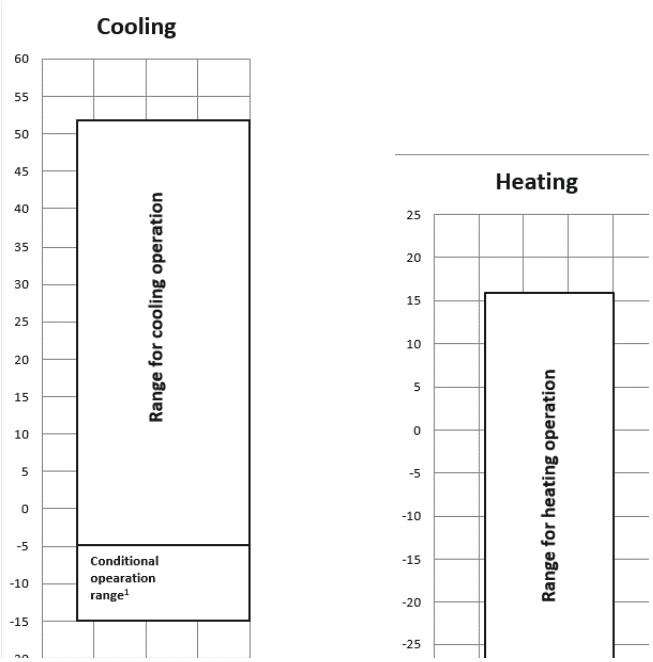

Fig. 16 —Operating Limits

Note1: Outdoor operating temperature under 23 ºF in "Cool" mode, the startup capacity of indoor units must meet at least 50% of outdoor unit capacity.

Table 21 — Operating Limits (ºF)

Mode	Outdoor Temperature	Room Temperature
Cooling operation	5 ºF to 125 ºF	62.6 ºF to 89.6 ºF
Heating operation	-22 ºF to 86 ºF	62.6 ºF to 86 ºF
Dehumidification operating	5 ºF to 125 ºF	48.2 ºF to 73.4 ºF

NOTE:

1. **If the system is operating outside of the conditions above, the heat pump will enable safeties to protect the equipment. Abnormal operation may occur.**
2. **These figures are base on the operation conditions between indoor units and outdoor units: The equivalent pipe length is 16.4ft (5m), and height difference is 0ft (0m).**

CAUTION

The indoor relative humidity should be lower than 80%. If the air conditioner works in an environment with a relative humidity higher than mentioned above, the surface of the air conditioner may condensate. In this case, it is recommended to set the air speed of the indoor unit to high.

SOUND LEVELS

Table 22 — Sound Pressure Level

Mode	dB(A)	Height (H) ft (m)
37MVH036HDS3	59	3-1/4 (1)
37MVH048HDS3	60	3-1/4 (1)
37MVH060HDS3	60	3-1/4 (1)

NOTE: Sound pressure level is measured at a position 1m in front of the unit and Hm above the floor in a semi-anechoic chamber. During in-site operation, sound pressure levels may be higher as a result of ambient noise.

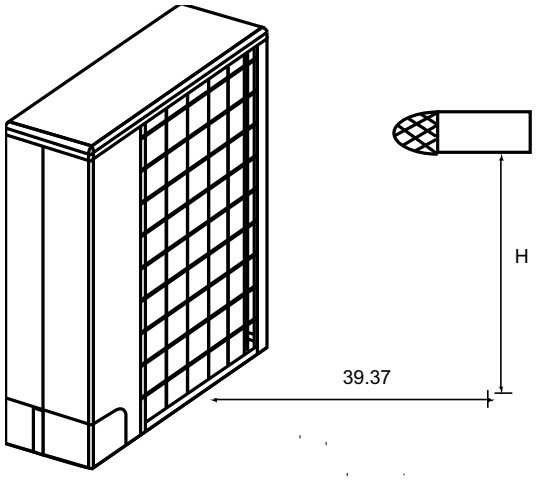

Fig. 17 —Sound Pressure Level Measurement (unit: in)

Octave Band Levels

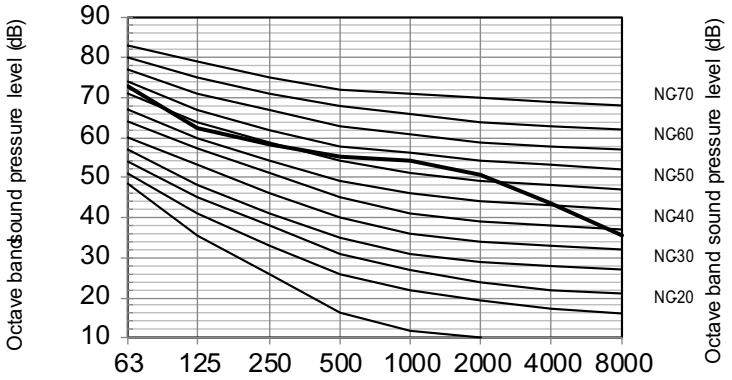

Fig. 18 —3 Ton Unit

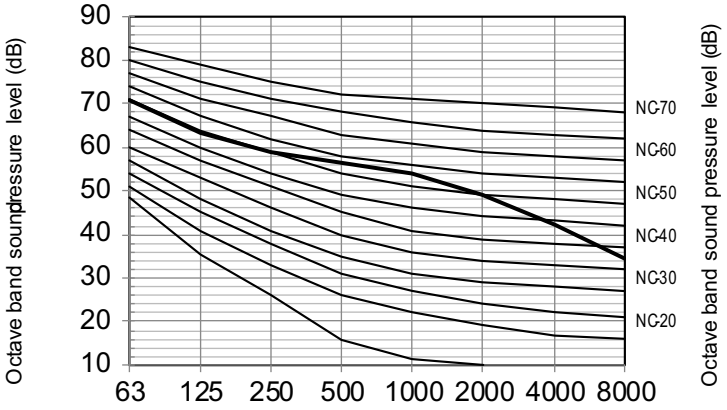

Fig. 19 —4 Ton Unit

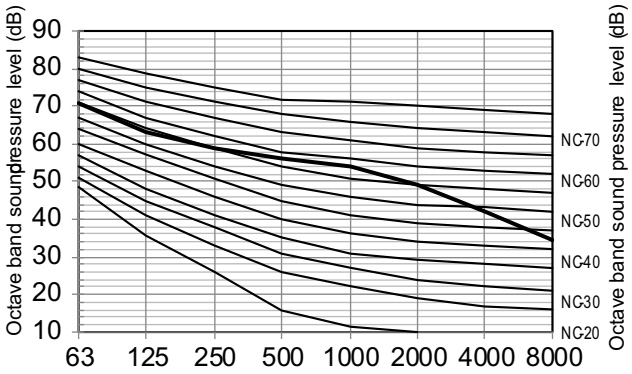

Fig. 20 —5 Ton Unit

PREFACE TO SYSTEM DESIGN AND INSTALLATION

Notes for Installers Boxes

The information contained in this Engineering Data Book may primarily be of use during the system design stage of a R454B Mini VRF project. Additional information for field installation, such as “Notes for Installers,” has been placed in boxes shipped with the unit.

NOTE: Notes for installers contain important information that may primarily be of use during field installation.

Definitions

In this Engineering Data Book, the term “applicable legislation” refers to all national, local and other laws, standards, codes, rules, regulations and other legislation that apply in a given situation.

⚠ PRECAUTIONS

All system installation including installation of piping and electrical work must only be carried out by competent and suitably qualified, certified and accredited professionals and in accordance with all applicable regulations.

UNIT PLACEMENT AND INSTALLATION

OUTDOOR UNITS

Placement considerations

Placement of outdoor units should account for the following considerations:

- Outdoor unit should not be installed in where there are gas leaks.
- Outdoor unit should not be exposed to direct radiation from a high-temperature heat source.
- Outdoor unit should not be installed in positions where dust or dirt may affect heat exchangers.
- Outdoor unit should not be installed in locations where exposure to oil or to corrosive or harmful gases, such as acidic or alkaline gases, may occur.
- Outdoor unit should not be installed in locations where exposure to coastal environment may occur unless the anti-corrosion coastal coating option has been added.
- Outdoor units should be installed in well-drained, well-ventilated positions that are as close as possible to the indoor units.

Spacing

Outdoor units must be spaced such that sufficient air may flow through each unit. Sufficient airflow across heat exchangers is essential for outdoor units to function properly. Figures 21 to 23 show spacing requirements in three different scenarios.

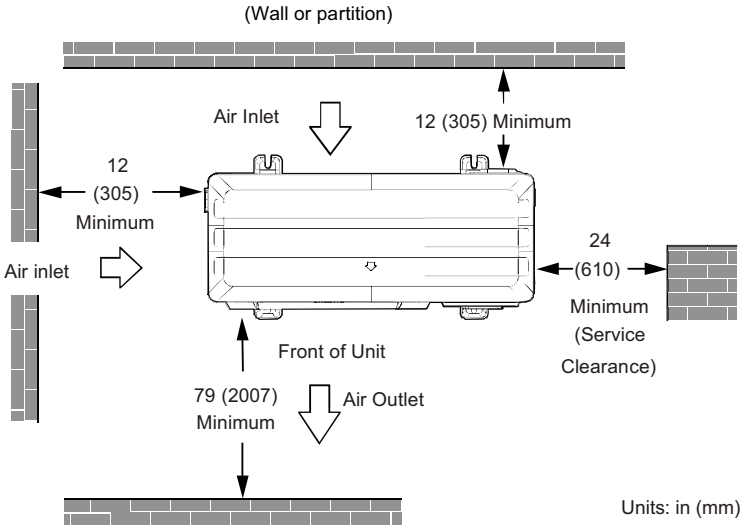

Fig. 21 —Single Unit Installation

NOTE: If unit is surrounded on three or four sides by walls or partitions that are taller than 10ft (3m), call your dealer to discuss additional requirements.

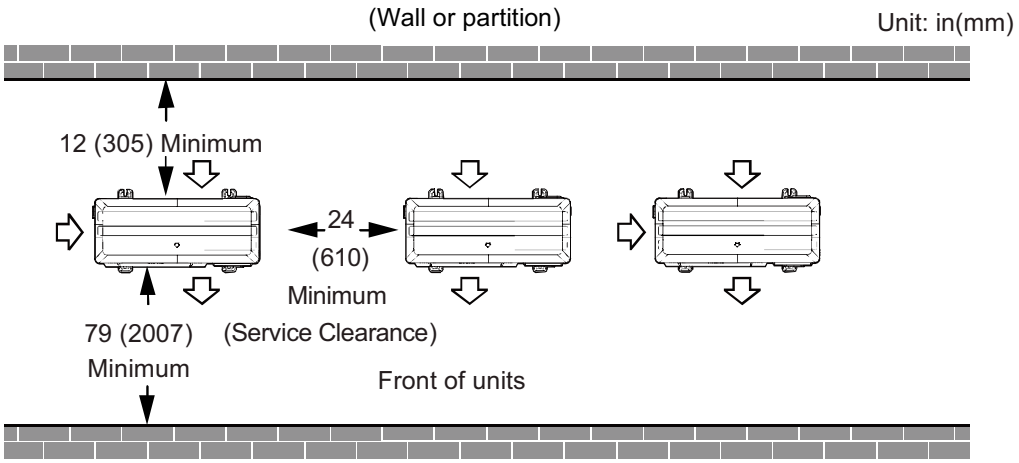

Fig. 22 —Multiple Unit Installation (Top View)

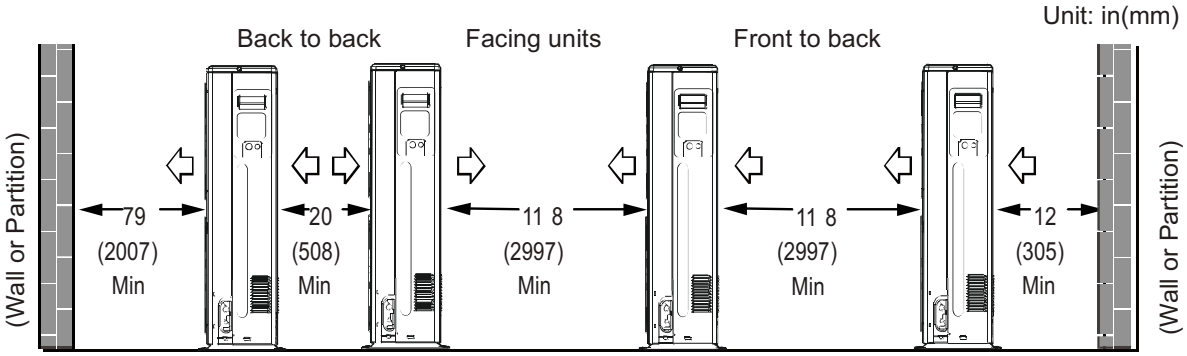

Fig. 23 —Multiple Unit Installation (Side View)

Base structures

Consider the following for the outdoor unit base structure:

- A solid base prevents excess vibration and noise. Outdoor unit bases should be constructed on solid ground or on structures of sufficient strength to support the units' weight.
- Bases should be at least 7-7/8in (200mm) high to provide sufficient access for installation of piping.
- Either steel or concrete bases may be suitable.
- A typical concrete base design is shown in Figure 24.
- To ensure that all contact points are equally secure, bases should be completely level. Base design should ensure that the points on the units' bases designed for weight-bearing support are fully supported.
- A drainage ditch should be provided to allow drainage of condensate that may form on the heat exchangers when the units are running in heating mode. The drainage should ensure that condensate is directed away from roadways and footpaths, especially in locations where the climate is such that condensate may freeze.

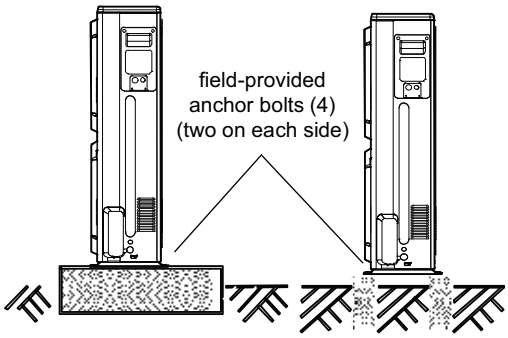

Fig. 24 —Outdoor Unit Typical Concrete Base Structure Design

Acceptance and unpacking

NOTES:

- **When units are delivered check whether any damage occurred during shipment. If there is damage to the surface or outside of a unit, submit a written report to the shipping company.**
- **Check that the model, specifications and quantity of the units delivered are as ordered.**
- **Check that all accessories ordered have been included. Retain the Owner's Manual for future reference.**

Hoisting

NOTES;

- **Do not remove any packaging before hoisting. If units are not packaged or if the packaging is damaged, use suitable boards or packing material to protect the units.**
- **Hoist one unit at a time.**
- **Keep units upright during hoisting. Ensure units do not tip greater than 30° beyond center (vertical) when lifting.**

INDOOR UNITS

Placement considerations

Placement of indoor units should take account of the following considerations:

- Sufficient space for drain piping performance and for re-circulation of supply air access during servicing and maintenance.
- To ensure a good cooling/heating effect, short-circuit ventilation (where outlet air returns quickly to a unit’s air inlet) should be avoided.
- To prevent excessive noise or vibration during operation, do not secure equipment directly to fixed structure. Instead, hang units from field-supplied support materials rated for a minimum of twice the unit’s weight.

NOTES:

- **Before installing an indoor unit, check that the model to be installed is as specified in the construction drawings, Vroom, design files, and confirm the correct orientation of the unit.**
- **Ensure that units are installed at the correct height.**
- **To allow smooth condensate drainage and to ensure unit stability (to prevent excessive noise or vibration), ensure that units are level to within 1° of the horizontal. If a unit is not level to within 1° of the horizontal, water leakage or abnormal vibration/noise may occur.**

REFRIGERANT PIPING DESIGN

DESIGN CONSIDERATIONS

Refrigerant piping design should take account of the following considerations:

- The amount of brazing required should be kept to a minimum.
- On the two inputs of the first indoor branch joint (“A” in Figs. 25 and 27), the system from L3 and L4 should be nearly equal (number of units, total capacities and total piping lengths).

MATERIAL SPECIFICATION

Only seamless phosphorus-deoxidized copper piping that complies with all applicable legislation should be used. Temper grades and minimum thicknesses for different diameters of piping are specified in Table 23.

Table 23 — Piping Temper and Thickness

Piping Outer Diameter (in)	Temper[1]	Minimum Thickness (in)
1/4	0 (annealed)	0.038
3/8		0.038
1/2		0.039
5/8		0.039
3/4		0.039
7/8	1/2H (half hard)	0.039

1. O: Soft copper piping;
2. 1/2H: Straight piping.

PERMITTED PIPING LENGTHS AND LEVEL DIFFERENCES

The piping length and level difference requirements that apply are summarized in Table 24 and are fully described as follows (refer to Fig. 25 and 27):

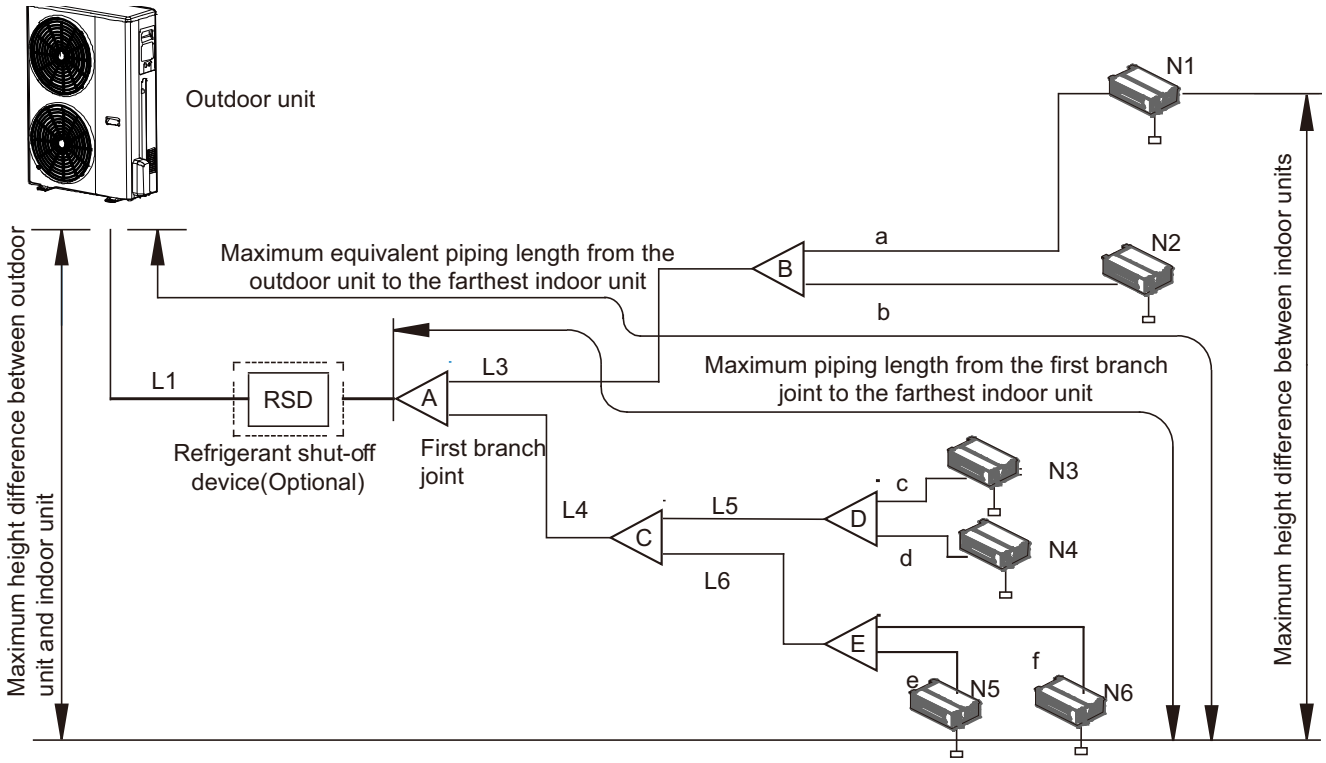

Fig. 25 —Permitted Refrigerant Piping Lengths and Level Differences (VRF Indoor Units)

Table 24 — Summary of Permitted Refrigerant Piping Lengths and Level Differences (VRF Indoor Units)

Total Piping Length			Permitted Value	Piping
Piping Length	Total Pipe Length (Actual)		≤984 ft (3.0/4.0/5.0 ton)	L1 + L3 + L4 + L5 + L6 + a + b + c + d + e + f or L1 + L7 + L8 + g + h + j + k + l
	Maximum Piping	Actual Length	≤296 ft	L1 + L3 + max (a, b) or L1 + L4 + L5 + max(c, d) or L1 + L4 + L6 + max (e, f) or L1 + L7 +max (k, l) or L1 + L8 + max (g, h, i, j)
		Equivalent Length	≤328 ft	
	Pipe Length (from the first branch to the furthest IDU)		≤131 ft	L3 + max (a, b) or L4 + L5 + Max(c, d) or L4 + L6 + Max(e, f) or L7 + max (k, i) or L8+max (g, h, i, j)
Level Difference	Level difference between IDU~ODU	Outdoor Unit Up	≤164 ft	---
		Outdoor Unit Down	≤131 ft	---
	Level difference between IDU~IDU5		≤49 ft	---

Table 25 — Connectible Indoor Units

Outdoor Unit Size	Capacity of Outdoor Unit (ton)	Maximum Number of Connected VRF Indoor Units
036	3.0	5
048	4.0	7
060	5.0	9

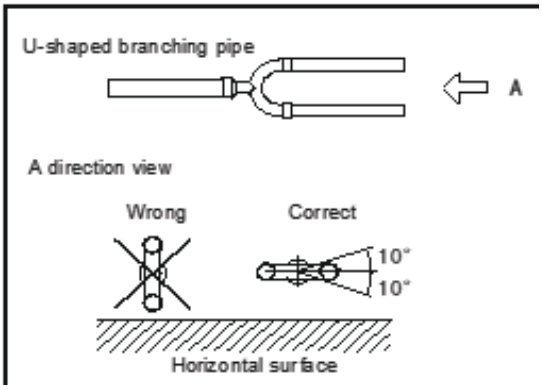

Fig. 26 —Branch Joint Orientation

SELECTING PIPING DIAMETERS

Selecting Piping Diameters for VRF Indoor units System

Tables 26 to 28 below, specify the required pipe diameters for the indoor and outdoor piping. The main pipe (L1) and first indoor branch joint (A) should be sized according to whichever of Tables 26 and 27 indicates the larger size.

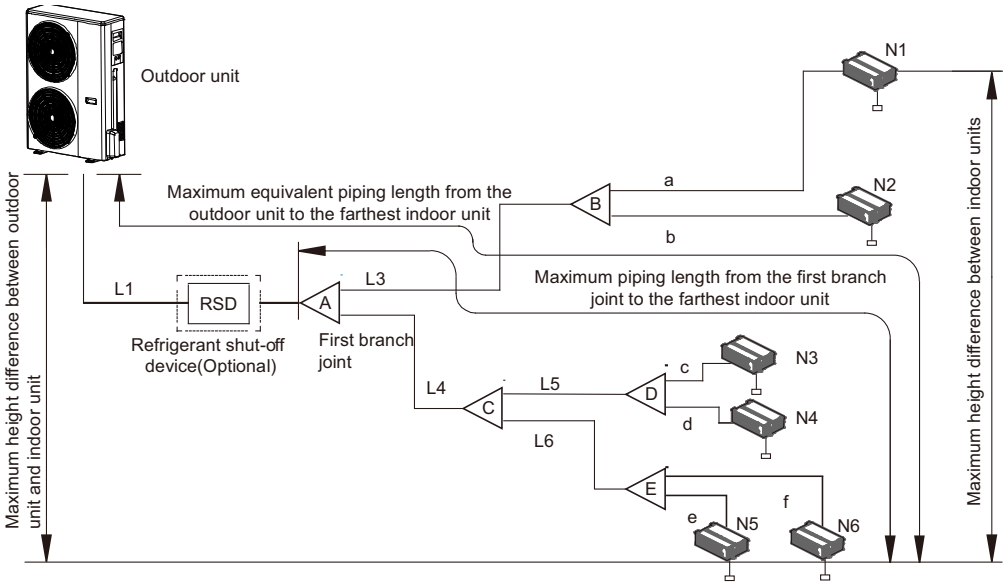

Fig. 27 —Selecting Piping Diameters

Table 26 — Main Pipe[1] (L1) and First Indoor Branch Joint (A)

Total Capacity of Outdoor Units	Equivalent liquid pipe length < 45m			Equivalent liquid pipe length ≥ 45m		
	Gas pipe (in.)	Liquid pipe (in.)	Branch joint kit	Gas pipe (in.)	Liquid pipe (in.)	Branch joint kit
3.0~4.0 ton	5/8	3/8	45VM900031	3/4	3/8	45VM900031
5.0 ton	3/4	3/8	45VM900032	7/8	3/8	45VM900032

NOTES:

1. **The main pipe (L1) and first indoor branch joint (A) should be sized according to whichever of Tables 27 and 28 indicates the larger size.**
2. **The straight distance between copper pipe turning and the contiguous branch pipe is at least 0.5 m.**
3. **The straight distance between the contiguous branch pipes is at least 0.5 m.**
4. **The straight distance which the branch pipes connected to the IDU is at least 0.5 m.**

Table 27 — Indoor Main Pipes (L2 to L5) and Indoor Branch Joint Kits

Total Capacity of Indoor Units (Btu/h	Gas pipe (in.)	Liquid pipe (in.)	Branch joint kit
A<56700	5/8	3/8	45VM900031
56700≤A<78500	3/4	3/8	45VM900032

NOTE: If indoor main pipes (L2 to L10) are larger than the main pipe (L1), indoor main pipes should reduce to the main pipe's size

Table 28 — Indoor Auxiliary Pipes (a to f)

Indoor Unit Type	Capacity of Indoor Units (Btu/h	Gas pipe (in.)	Liquid pipe (in.)
VRF indoor unit	5,7,9,12,15,18	1/2	1/4
	24,30,36,48,54	5/8	3/8
VRF AHU	12,18,24,30,36	3/4	3/8
	48,54	7/8	3/8

REFRIGERANT PIPING SELECTION EXAMPLE

The example below illustrates the piping selection procedure for a system consisting of one outdoor unit (16kW) and 6 indoor units. The system's equivalent length of all liquid pipes and gas pipes is in excess of 90m.

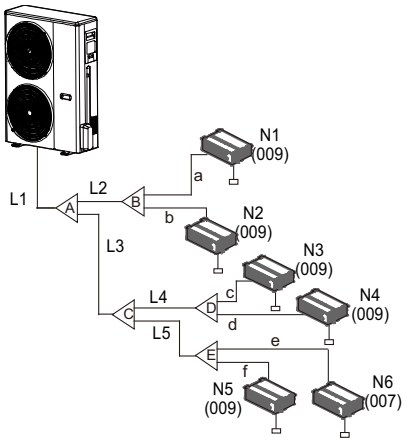

Legend	
L_1	Main pipe
L_2 to L_5	Indoor main pipes
a to f	Indoor auxiliary pipes
A to E	Indoor branch joints
Figures in parentheses indicate indoor unit capacity indexes.	

Fig. 28 —Refrigerant Piping Selection Example

Branch Joints

Branch joint design should take account of the following:

- U-shaped branch joints should be used – **tee joints are not suitable**.
- To ensure even distribution of refrigerant, branch joints should not be installed within 19.68in (500mm) of a 90° bend, another branch joint or the straight section of piping leading to an indoor unit, with the minimum 19.68in (500mm) being measured from the point where the branch joint is connected to the piping, as shown in Figure 29.

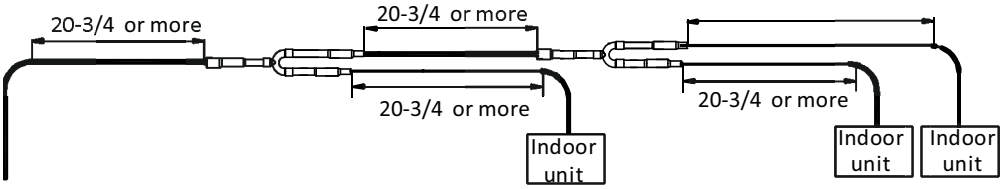

Fig. 29 —Branch Joint Spacing and Separation from Bends (unit: in)

Table 29 — Indoor Branch Joint Dimensions (unit: in)

Model	Gas side joints	Liquid side joints
45VM900031	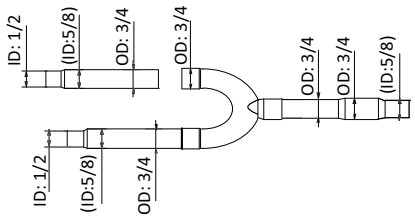	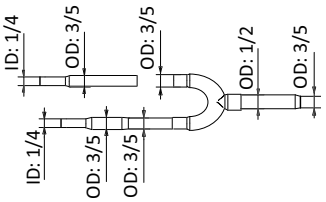
45VM900032	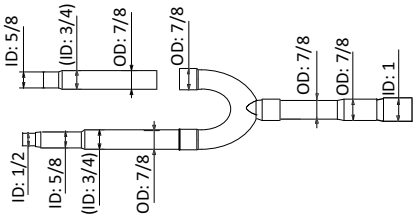	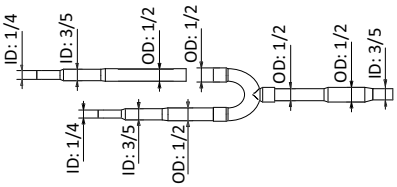
45VM900021	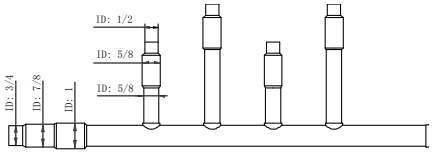	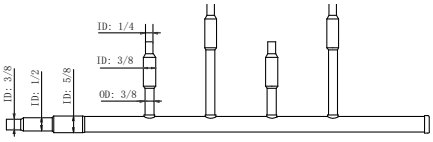
45VM900022	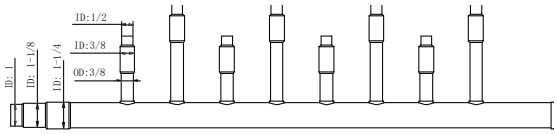	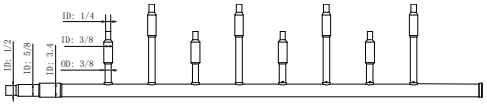

REFRIGERANT LEAKAGE PRECAUTIONS

R454B refrigerant is flammable in air, so precautions should be taken to avoid danger to life in the unlikely event of a major refrigerant leakage. Precautions should be taken in accordance with all applicable legislation. Where no applicable legislation exists, the following may be used as a guide:

- Use combustible R454B refrigerant. Ensure the refrigerant is charged in a proper position to cover a large area so that its leak will never reach critical concentration.
- The user/owner or their authorized representative shall check the alarm device, mechanical ventilation and refrigerant leakage sensor at least once a year to ensure they are correctly functioning.
- Under no circumstances shall potential sources of ignition be used to search for or detect refrigerant leaks.
- A halide torch (or any other detector using a naked flame) shall not be used.
- If leak is suspected, keep the area ventilated to avoid the risk of refrigerant stagnating, and remove/extinguish all naked flames.
- When the system is equipped with refrigerant shut-off device, the outdoor unit enters refrigerant recovery mode; When the system is not equipped with refrigerant stage device, the outdoor unit will directly stop after receiving the refrigerant leakage signal.
- When the refrigerant leakage fault occurs, contact the dealer to deal with it. It is strictly forbidden to repair by yourself.

Legend	
a	Outdoor unit
b	Refrigerant shut-off device
c	Indoor branch joints
d	Indoor units
e	Controller

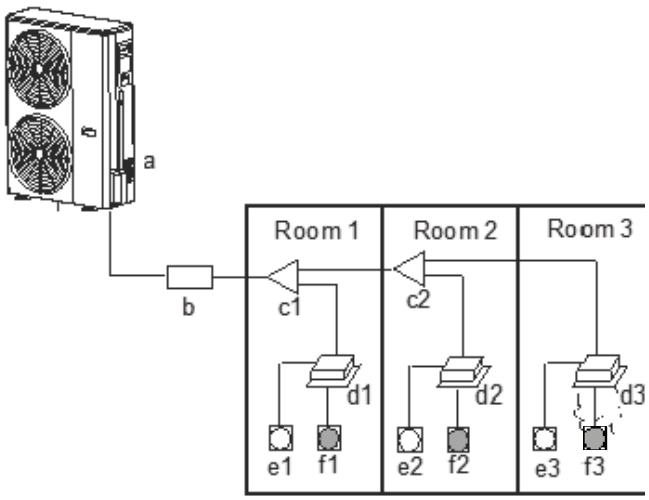

Fig. 30 —Potential Refrigerant Leak Scenario

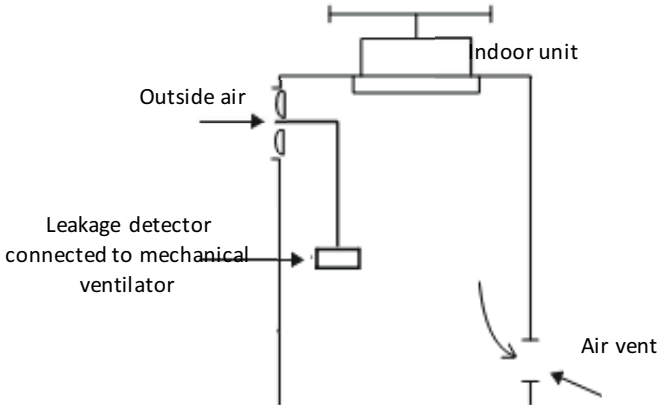

Fig. 31 —Mechanical Ventilator Controlled by Refrigerant Leak Detector

STORAGE OF COPPER PIPING

Pipe delivery, storage and sealing

NOTES FOR INSTALLERS:

- **Ensure that piping does not get bent or deformed during delivery or while stored.**
- **On construction sites store piping in a designated location.**
- **To prevent dust or moisture entering, piping should be kept sealed while in storage and until it is about to be connected. If piping is to be used soon, seal the openings with plugs or adhesive tape. If piping is to be stored for a long time, charge the piping with nitrogen at 0.2-0.5 psi and seal the openings by brazing.**
- **Storing piping directly on the ground risks dust or water ingress. Pipe rak supports can be used to raise piping off the ground.**
- **During installation, ensure that piping to be inserted through a hole in a wall is sealed to ensure dust and/or fragments of wall do not enter.**
- **Be sure to seal piping being installed outdoors (especially if being installed vertically) to prevent rain**

MANIPULATING COPPER PIPING

De-oiling

NOTE FOR INSTALLERS: Lubrication oil used during some copper pipe manufacturing processes can cause deposits to form in R454B refrigerant systems, causing system errors. Oil-free copper piping should therefore be selected. If ordinary (oily) copper piping is used, it must be cleaned with gauze dipped in tetrachloroethylene solution prior to installation.

CAUTION

INSTALLER/SERVICE TEAM

Never use carbon tetrachloride (CCl_4) for pipe cleansing or flushing, as doing so will seriously damage the system.

Flared joints

Flared joints should be used where a screw thread connection is required.

NOTES FOR INSTALLERS:

- **Before flaring 1/2H (half hard) piping, anneal the end of the pipe to be flared.**
- **Remember to place the flare nut on the piping before flaring.**
- **Ensure the flared opening is not cracked, deformed or scratched, otherwise it will not form a good seal and refrigerant leakage may occur.**
- **The diameter of the flared opening should be within the ranges specified in Table 30. Refer to Fig. 32.**

Table 30 — Flared Opening Size Ranges

Pipe (in)	Flared Opening Diameter (A) (mm)
1/2	8.3 - 8.7
3/8	12.0 - 12.4
1/2	15.4 - 15.8
5/8	18.6 - 19.0
3/4	22.9 - 23.3

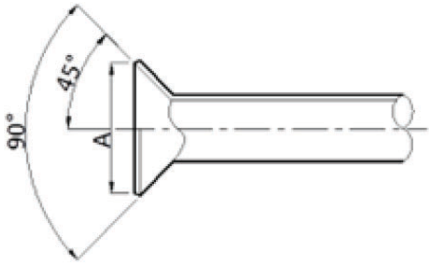

Fig. 32 —Flared Opening

- **When connecting a flared joint, apply some compressor oil to the outer surfaces of the flared opening to facilitate the connection and rotation of the flare nut, ensure firm connection between the sealing**

Bending piping

Bending copper piping reduces the number of brazed joints required and can improve quality and save material.

Piping bending methods

- Hand bending is suitable for thin copper piping (1/4in – 1/2in).
- Mechanical bending (using a bending spring, manual bending machine or powered bending machine) is suitable for a wide range of diameters (1/4in -2-1/8in).

⚠ CAUTION

- **When using a spring bender, ensure that the bender is clean before inserting it in the piping.**
- **After bending a copper pipe, ensure that there are no wrinkles or deformation on either side of the pipe.**
- **Ensure that bend angles do not exceed 90°, otherwise wrinkles may appear on the inner side of the pipe, and the pipe may buckle or crack. Refer to Fig. 33.**
- **Do not use a pipe that has buckled during the bending process; ensure that the cross section at the bend is greater than 2/3 of the original area.**

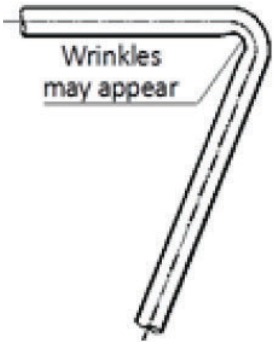

Fig. 33 —Pipe Bending in Excess of 90 Degrees

NOTES FOR INSTALLERS

WARNING

- **Never flow oxygen through piping as doing so aids oxidation and could easily lead to explosion and as such is extremely dangerous.**
- **Take appropriate safety precautions such as having a fire extinguisher to hand while brazing.**

Flowing nitrogen during brazing

- Use a pressure reducing valve to flow nitrogen through copper piping at 0.02-0.03psi during brazing.
- Start the flow before brazing starts and ensure that the nitrogen continuously passes through the section being brazed until the brazing is complete and the copper has cooled down completely.

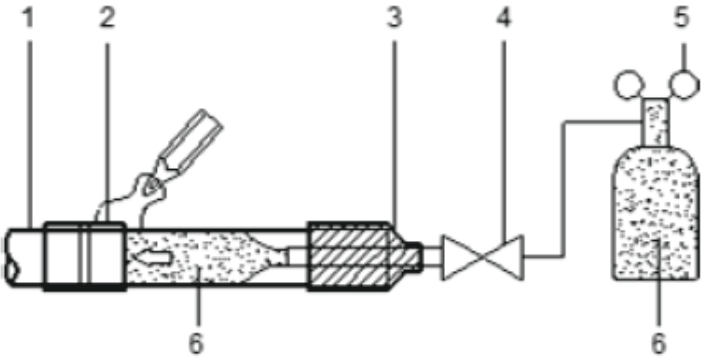

Fig. 34 —Flowing Nitrogen Through Piping During Brazing

Table 31 — Legend

1	Copper piping
2	Section being brazed
3	Nitrogen connection
4	Hand valve
5	Pressure-reducing valve
6	Nitrogen

- When joining a shorter section of piping to a longer section, flow nitrogen from the shorter side to allow better displacement of air with nitrogen.
- If the distance from the point where nitrogen enters the piping to the joint to be brazed is long, ensure that the nitrogen is flowed for sufficient time to discharge all the air from the section to be brazed before commencing brazing.

BRANCH JOINTS

- Use U-shaped branch joints as specified on the construction drawings – do not replace U-shaped branch joints with tee joints.
- Indoor branch joints may be installed either horizontally or vertically. Horizontal branch joints must be installed at an angle to the horizontal not exceeding 10° in order to avoid uneven distribution of refrigerant and possible malfunction. Refer to Fig. 26.
- To ensure even distribution of refrigerant, a limitation is placed on how close branch joints may be installed to bends, other branch joints and the straight sections of piping leading to indoor units. Refer to Part 3, 3.6 “Branch Joints”.

DRAIN PIPING

DESIGN CONSIDERATIONS

Drain piping design should take account of the following considerations:

- Indoor unit condensate drain piping needs to be of sufficient diameter to carry the volume of condensate produced at the indoor units and installed at a slope sufficient to allow drainage. Discharge as close as possible to the indoor units is usually preferable.
- To prevent the drain piping becoming excessively long, consideration should be given to installing multiple drain piping systems, with each system having its own drainage point and providing drainage for a subset of the overall set of indoor units.
- The routing of drain piping should take into consideration the need to maintain sufficient slope for drainage whilst avoiding obstacles such as beams and ducting. The drain piping slope should be at least 1:100 away from indoor units. Refer to Fig. 35.

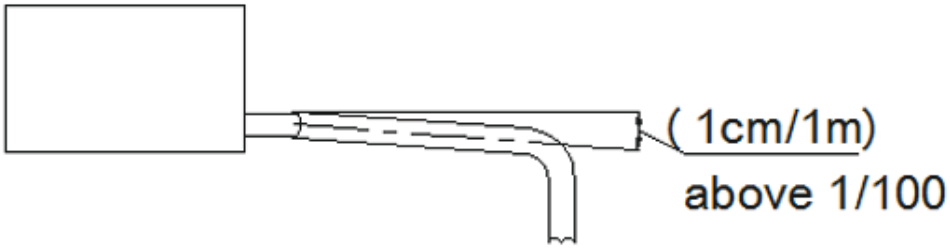

Fig. 35 —Drain Piping Minimum Slope Requirement

- To avoid backflow and other potential complications, two horizontal drain pipes should not meet at the same level. Refer to the Fig. 36 for suitable connection arrangements. Such arrangements also allow the slope of the two horizontal pipes to be selected independently.

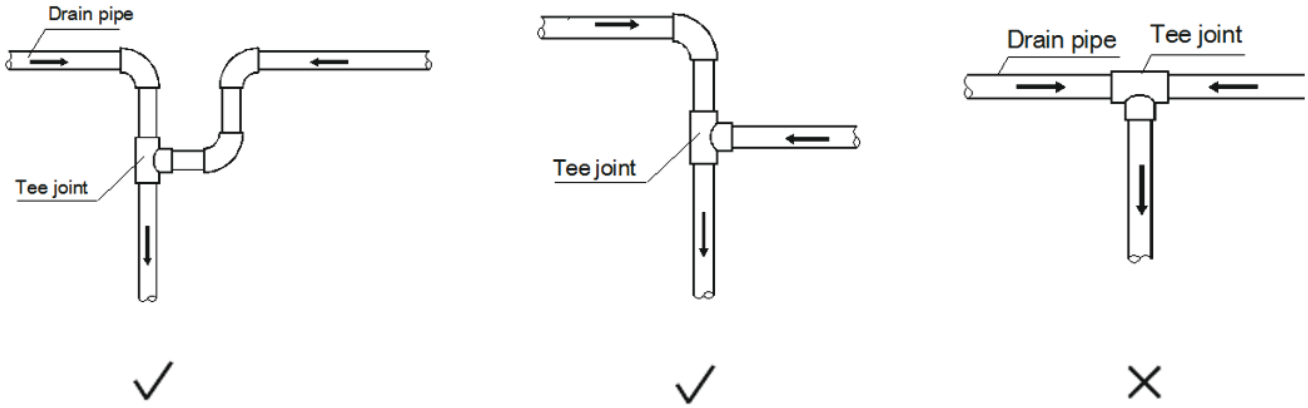

Fig. 36 —Drain Piping Joints – Correct and Incorrect Configurations

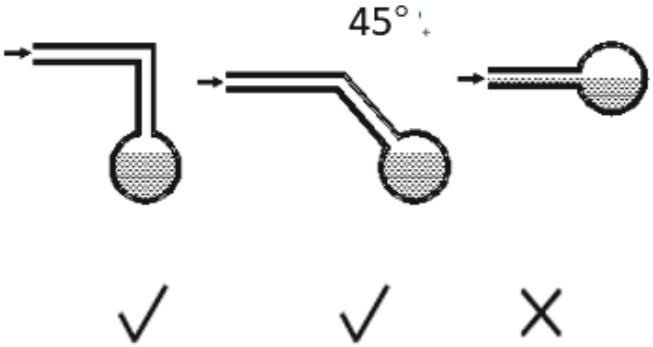

Fig. 37 —Branch Drain Piping Joining Main Drain Piping

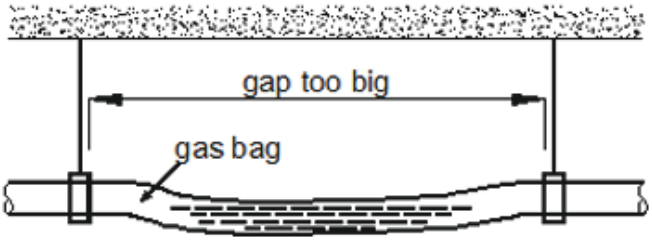

Fig. 38 —Effect of Insufficient Drain Piping Support

- Branch drain piping should join main drain piping from the top, as shown in Fig. 36.
- Recommended support/hanger spacing is 0.8 – 1.0m for horizontal piping and 1.5 – 2.0m for vertical piping. Each vertical section should be fitted with at least two supports. For horizontal piping, spacing greater than those recommended leads to sagging and deformation of the pipe profile at the supports which impedes water flow and should therefore be avoided.
- Air vents should be fitted at the highest point of each drain piping system to ensure that condensation is discharged smoothly. U-bends or elbow joints should be used such that the vents face downwards, to prevent dust entering the piping. Refer to Fig. 39. Air vents should not be installed too close to indoor unit lift pumps.

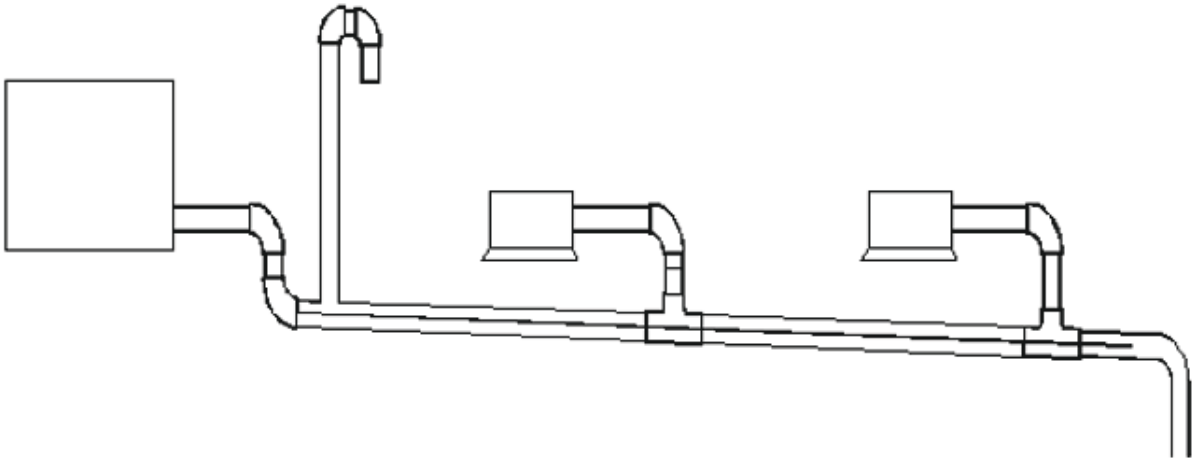

Fig. 39 —Drain Piping Air Vents

- Air conditioner drain piping should be installed separately from waste, rainwater and other drain piping and should not come into direct contact with the ground.
- Drain piping diameter should be not less than the indoor units' drain piping connection.
- To allow inspection and maintenance, the piping clamps shipped with units should be used to attach drain piping to indoor units – adhesive should not be used.
- Thermal insulation should be added to drain piping to prevent condensation forming. Thermal insulation should extend all the way to the connection with the indoor unit.
- Units with drain pumps should have separate drain piping systems from systems that use natural drainage.

WATER TRAPS

For indoor units with a high negative pressure differential at the outlet of the drainage pan, a trap should be fitted to the drain piping to prevent poor drainage and/or water being blown back into the drainage pan. Traps should be arranged as in Fig. 40. The vertical separation H should be in excess of 1.9685 in. A plug may be fitted to allow cleaning or inspection.

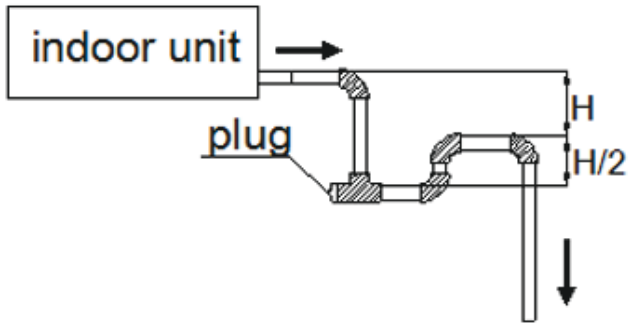

Fig. 40 —Drain Piping Water Traps

SELECTING PIPING DIAMETERS

Select branch drainage piping (the drain piping connection to each unit) diameters according to indoor unit flow volume and select main drainage piping diameters according to the combined flow volume of the upstream indoor units. Use a design assumption of 2 liters of condensate per horsepower per hour. For example, the combined flow volume of three 2HP units and two 1.5HP units would be calculated as follows:

$$\text{Combined flow volume} = 3 \times 2\ \text{L/HP/h} \times 2\text{HP} + 2 \times 2\ \text{L/HP/h} \times 1.5\text{HP} = 18\ \text{L/h}$$

Tables 32 and 33 specify the required piping diameters for horizontal and vertical branch piping and for main piping. Note that main piping should use PVC40 or larger.

Table 32 — Horizontal Drain Pipe Diameters

PVC piping	Nominal diameter (in)	Capacity (L/h)		Remarks
		Slope 1:50	Slope 1:100	
PVC25	0.98	39	27	Branch piping only
PVC32	1.26	70	50	
PVC40	1.57	125	88	Branch or main piping
PVC50	1.97	247	175	
PVC63	2.48	473	334	

Table 33 — Vertical Drain Piping Diameters

PVC piping	Nominal diameter (in)	Capacity (L/h)	Remarks
PVC25	0.98	220	Branch piping only
PVC32	1.26	410	
PVC40	1.57	730	Branch or main piping
PVC50	1.97	1440	
PVC63	2.48	2760	
PVC75	2.95	5710	
PVC90	3.54	8280	

Manufacturer reserves the right to change, at any time, specifications and designs without notice and without obligations.

DRAIN PIPING FOR UNITS WITH LIFT PUMPS

Drain piping for units with lift pumps should take account of the following additional considerations:

- A downward sloping section should immediately follow the vertically rising section adjacent to the unit, otherwise a water pump error will occur. Refer to Fig. 41.
- Air vents should not be installed on vertically rising sections of drain piping, otherwise water may be discharged through the air vent or water flow may be impeded.

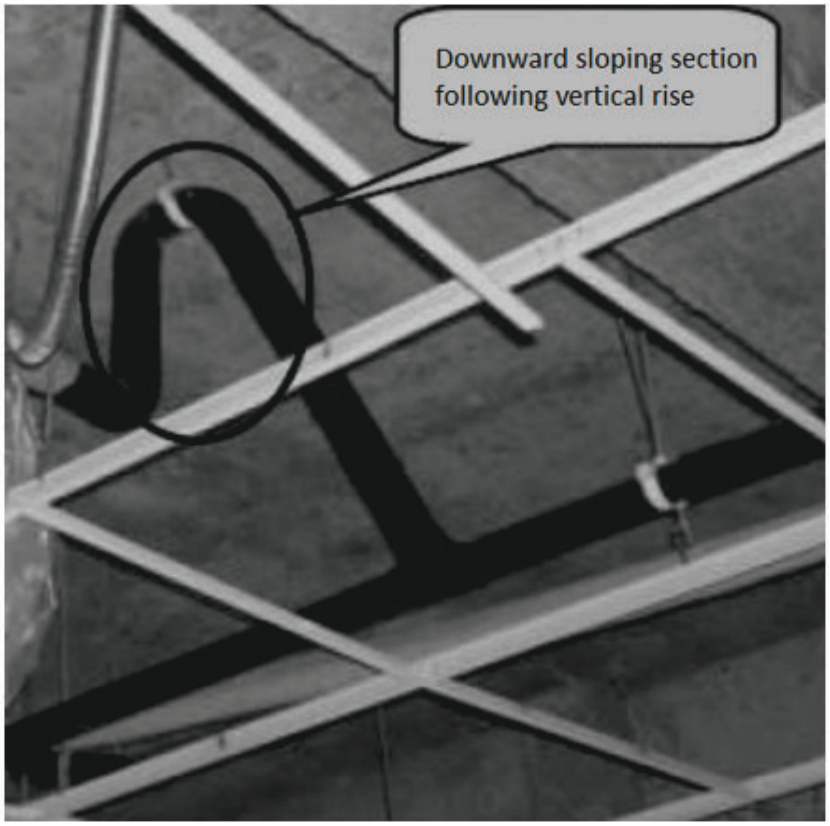

Fig. 41 —Downward Sloping Section of Drain Piping

DRAIN PIPING INSTALLATION

Installation of the drain piping should proceed in the following order:

⚠ CAUTION

Ensure that all joints are firm and once the drain piping is all connected conduct a water tightness test and water flow test.

Do not connect air conditioner drain piping to waste, rainwater or other drain piping and do not let air conditioner drain piping come into direct contact with the ground.

For units with drain pumps, test that the drain pump functions properly by adding water to the unit's drainage pan and running the unit. To allow inspection and maintenance, the pipe clamps shipped with units should be used to attach drain piping to indoor units – adhesive should not be used.

WATER TIGHTNESS TEST AND WATER FLOW TEST

Once installation of a drainage piping system is compete, water tightness and water flow tests should be performed.

Water tightness test

Fill the piping with water and test for leakages over a 24-hour period.

Water flow test (natural drainage test)

Slowly fill the drainage pan of each indoor unit with at least 600ml of water through the inspection port and check that the water is discharged through the outlet of the drain piping.

CAUTION

The drain plug in the drainage pan is for removing accumulated water prior to performing indoor unit maintenance. During normal operation, the drain should be plugged to prevent leakage.

INSULATION

REFRIGERANT PIPING INSULATION

Purpose

During operation, the temperature of the refrigerant piping varies. Insulation is required to ensure unit performance and compressor lifespan. During cooling, the gas pipe temperature can be very low. Insulation prevents condensation forming on the piping. During heating, the gas pipe temperature can rise to as high as 212℉. Insulation serves as necessary protection from burns.

Selecting Insulation Materials

Refrigerant piping insulation should be closed-cell foam of B1 fire resistance rating that can withstand a constant temperature of over 248℉ and that complies with all applicable legislation.

Thickness of insulation

Carry out heat insulation treatment for the pipes at the gas and liquid sides respectively. Pipes on the liquid and air sides have a low temperature during cooling. Take sufficient insulation measures to prevent condensation. Minimum thicknesses for refrigerant piping insulation are specified in Table 34.

Table 34 — Refrigerant Piping Insulation Thickness

Pipe outer diameter	Humidity<80%RH Thickness	Humidity≥80%RH Thickness
1/4-1/2 in	≥ 0.59 in	≥ 0.79 in
5/8-7/8 in	≥ 0.79 in	≥ 0.99 in

Installation of Piping Insulation

With the exception of joint insulation, insulation should be applied to piping before fixing the piping in place. Insulation at joints in refrigerant piping should be applied after the gas tightness test has been completed.

- Installation of insulation should be carried out in a manner suited to the type of insulation material being used.
- Ensure there are no gaps at the joints between sections of insulation.
- Do not apply tape too tightly as doing so may shrink insulation, reducing its insulating properties leading to condensation and loss of efficiency.
- Insulate gas and liquid pipes separately, otherwise heat exchange between the two sides will greatly impact efficiency.
- Do not bind the separately insulated gas and liquid pipes together too tightly as doing so can damage the joints between sections of insulation.

Installation of joint insulation

Insulation at joints in the refrigerant piping should be installed after the gas tightness test has been successfully completed. The procedure at each joint is as follows:

1. Cut a section of insulation 1.97 to 3.94in longer than the gap to be filled. Ensure that the cross-sectional and longitudinal openings are all cut evenly.
2. Embed the section into the gap ensuring that the ends abut tightly to the sections of insulation either side of the gap.
3. Glue the longitudinal cut and the joints with the sections of insulation either side of the gap.
4. Seal the seams with tape.

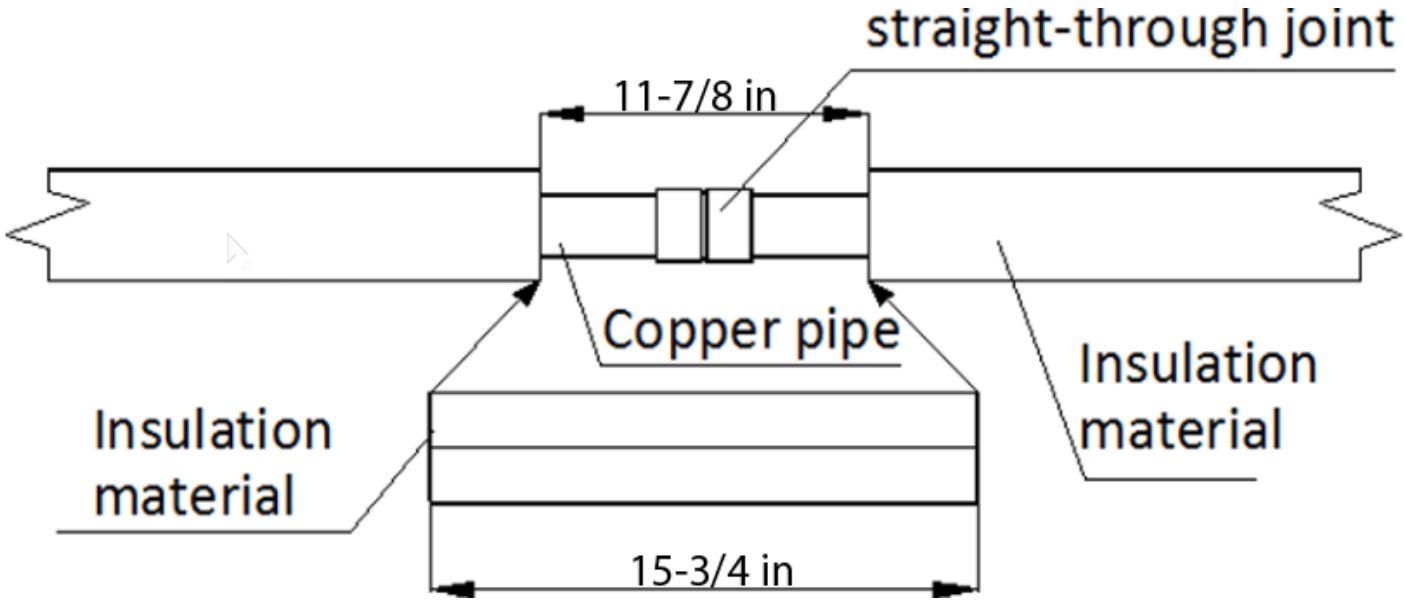

Fig. 42 —Installation of Joint Insulation

DRAIN PIPING INSULATION

- Use rubber/plastic insulating tube with a B1 fire resistance rating.
- The insulation should typically be in excess of 0.39in thick.
- For drain piping installed inside a wall, insulation is not required.
- Use suitable adhesive to seal seams and joints in the insulation and then bind with cloth reinforced tape of width not less than 1.97in. Ensure tape is fixed firmly to avoid condensation.
- Ensure the drain piping insulation adjacent to the indoor unit drainage water outlet is fixed to the unit itself using adhesive, to prevent condensation and dripping.

DUCTING INSULATION

Suitable insulation should be added to ducting in according with all applicable legislation.

CHARGING REFRIGERANT

CALCULATING ADDITIONAL REFRIGERANT CHARGE

The additional refrigerant charge required depends on the lengths and diameters of the outdoor and indoor liquid pipes, and the indoor unit capacity of the connection. Table 35 shows the additional refrigerant charge required per meter of equivalent pipe length for different diameters of pipe. Table 35 shows the additional refrigerant charge required for indoor unit. The total additional refrigerant charge is obtained by summing the additional charge requirements for each of the outdoor and indoor liquid pipes, as in the following formula, where L_1 to L_8 represent the equivalent lengths of the pipes of different diameters. Assume 0.5m for the equivalent pipe length of each branch joint.

$$\text{Additional refrigerant charge R (lb)} = \text{R1(lb)} + \text{R2(lb}$$

$$\begin{aligned}\text{Additional refrigerant charge R1 (lb)} &= L_1\,(\mathbf{1/4\ in}) \times 0.014\\ &+ L_2\,(\mathbf{3/8\ in}) \times 0.036\\ &+ L_3\,(\mathbf{1/2\ in}) \times 0.067\\ &+ L_4\,(\mathbf{5/8\ in}) \times 0.108\\ &+ L_5\,(\mathbf{3/4\ in}) \times 0.162\\ &+ L_6\,(\mathbf{7/8\ in}) \times 0.222\end{aligned}$$

Table 35 — Additional Refrigerant Charge R1

Liquid Side Piping	Additional Refrigerant Charge per (equivalent length of piping) (lb)
1/4 in	0.014
3/8 in	0.036
1/2 in	0.067
5/8 in	0.108
3/4 in	0.162
7/8 in	0.222

Table 36 — Additional Refrigerant Charge R2

Outdoor Unit Model (Tons)	VRF Indoor Units (lbs)				
	AHU exceeds 80% of all IDUs and IDU amount ≥ 2	Q4 exceeds 80% of all IDUs and IDU amount ≥ 2	T2 exceeds 80% of all IDUs and IDU amount ≥ 2	Other	One-to-one IDUs
3.0	2.07	1.83	\	\	\
4.0	0.44	\	\	\	\
5.0	0.44	\	\	\	\

ADDING REFRIGERANT

⚠ CAUTION

Only charge refrigerant after performing a gas tightness test and vacuum drying.

Never charge more refrigerant than required as doing so can lead to liquid hammering.

Only use refrigerant R454B - charging with an unsuitable substance may cause explosions or accidents.

Use tools and equipment designed for use with R454B to ensure required pressure resistance and to prevent foreign materials from entering the system.

Refrigerant must be treated in accordance with applicable legislation.

Always use protective gloves and protect your eyes when charging refrigerant.

Open refrigerant containers slowly.

Procedure

The procedure for adding refrigerant is as follows:

Step 1

Calculate additional refrigerant charge R (kg) (see “Calculating Additional Refrigerant Charge”).

Step 2

- Place a tank of R454B refrigerant on a weighing scale. Turn the tank upside down to ensure refrigerant is charged in a liquid state. (R454B is a blend of two different chemicals compounds. Charging gaseous R454B into the system could mean that the refrigerant charged is not of the correct composition).
- After vacuum drying (see “Vacuum Drying”), the blue and red pressure gauge hoses should still be connected to the pressure gauge and to the master unit stop valves.
- Connect the yellow hose from the pressure gauge to the R454B refrigerant tank.

Step 3

- Open the valve where the yellow hose meets the pressure gauge, and open the refrigerant tank slightly to let the refrigerant eliminate the air. Caution: open the tank slowly to avoid freezing your hand.
- Set the weighing scale to zero.

Step 4

- Open the three valves on the pressure gauge to begin charging refrigerant.
- When the amount charged reaches R (lb), close the three valves. If the amount charged has not reached R (lb) but no additional refrigerant can be charged, close the three valves on the pressure gauge, run the outdoor unit in cooling mode, and then open the yellow and blue valves. Continue charging until the full R (lb) of refrigerant has been charged, then close the yellow and blue valves. Note: Before running the system, be sure to complete all the pre-commissioning checks as listed in “Pre-commissioning Checks” and be sure to open all stop valves as running the system with the stop valves closed would damage the compressor.

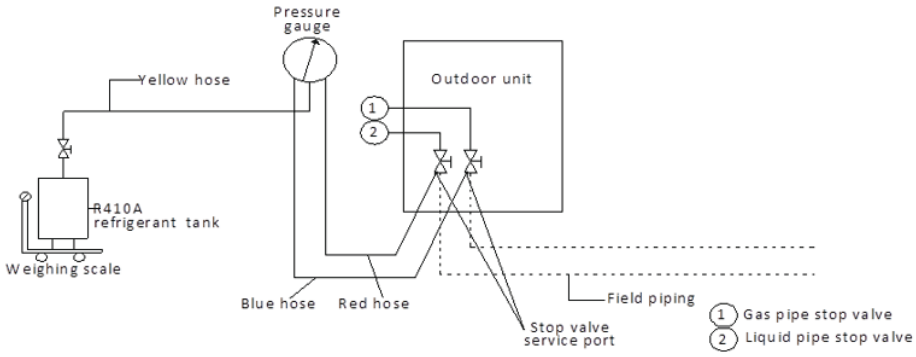

Pressure gauge

Fig. 43 —Charging Refrigerant

ELECTRICAL WIRING

GENERAL

⚠ CAUTION

All installation and wiring must be carried out by competent and suitably qualified, certified and accredited professionals and in accordance with all applicable legislation.

Electrical systems should be grounded in accordance with all applicable legislation.

Overcurrent circuit breakers and residual-current circuit breakers (ground fault circuit interrupters) should be used in accordance with all applicable legislation.

Wiring patterns shown

in this data book are general connection guides only and are not intended for, or to include all details for, any specific installation.

The refrigerant piping, power wiring and communication wiring are typically run in parallel. However the communication wiring should not be bound together with the refrigerant piping or power wiring. To prevent signal interference, the power wiring and communication wiring should not be run in the same conduit. If the power supply is less than 10A, a separation of at least 11-7/8in (300mm) between power wiring and communication wiring conduits should be maintained; if the power supply is in the range 10A to 50A then a separation of at least 19-5/8in (500mm) should be maintained.

POWER SUPPLY WIRING

Power supply wiring design and installation should adhere to the following requirements:

- Separate power supplies should be provided for the indoor units and outdoor unit.
- Where five or more outdoor units are installed, additional residual current protection (leakage protection) should be installed.
- All the indoor units in a system (i.e. all the indoor units connected to the same outdoor unit) should be tied into the same power circuit with the same power supply, overcurrent and residual current protection (leakage protection) and manual switch, as shown in Fig. 44. Do not install separate protectors or manual switches for each indoor unit. Powering on and shutting down all indoor units in a system should be done simultaneously. The reason for this is that if an indoor unit that is running were to suddenly power off whilst the other indoor units continued running, the evaporator of the powered-off unit would freeze since refrigerant would continue flowing to that unit (its expansion valve would still be open) but its fan would have stopped. The indoor units that remain running would not get sufficient refrigerant so their performance would suffer. Additionally, liquid refrigerant returning directly to the compressor from the powered-off unit would cause liquid hammering, potentially damaging the compressor.
- For outdoor unit power wire sizing and circuit breaker sizing, refer to “Electrical Characteristics”.

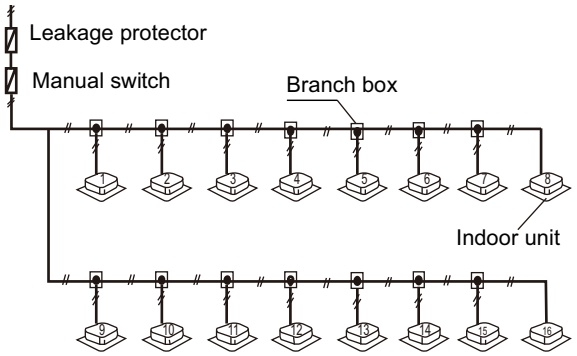

Fig. 44 —Indoor Unit Power Supply Wiring

The power supply should be connected to the outdoor unit power supply terminals as shown in Fig. 45

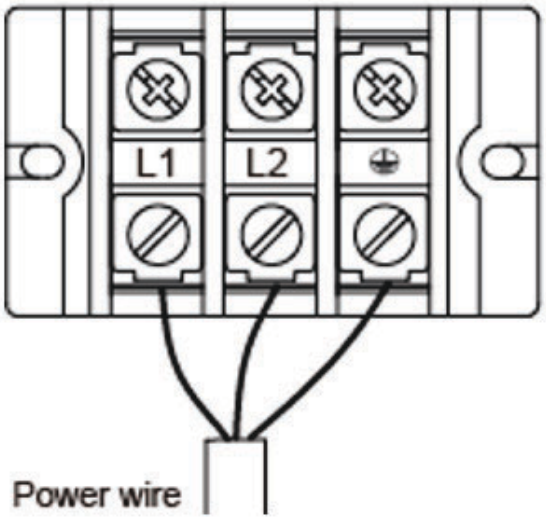

Fig. 45 —Outdoor Unit 1-Phase Power Supply Terminals

COMMUNICATION WIRING

Communication wiring design and installation should adhere to the following requirements:

- Do not connect the communication line when the power is on.'
- Connect the shielding nets at both ends of the shielded wire to the sheet metal "⏚"of the electronic control box.
- Do not connect the power cable to the terminal of communication line, otherwise, the motherboard will be damaged.
- The communication wiring of the indoor and ODU can only be connected to the ODU.
- When a single communication line is not long enough, the joint must be crimped or soldered, and the copper wire at the joint shall not be exposed.
- Do not interconnect different communication wires or conventional 24VAC non-communicating control wires (M1M2, CBYW, etc.), otherwise it will damage the control board.
- R454B outdoor unit compatible with R454B indoor units.
- The combined indoor unit must have a R454B refrigerant sensor.

HyperLink (M1M2) communication mode

Communication wiring design and installation should adhere to the following requirements when all IDUs uniform power supplied:

- 16/18 AWG two-core cable should be used for communication wiring when all the indoor units are uniform power supplied.
- All indoor units in the system are R454B indoor units.
- After the final indoor unit, the communication wiring CAN be continued back to the outdoor unit to ensure communication in case of disconnection point. In this situation, M1 M2 are polarized and M1 should connect to M1, M2 should connect to M2.
- Separate power supply for the indoor units and refrigerant shut-off device.

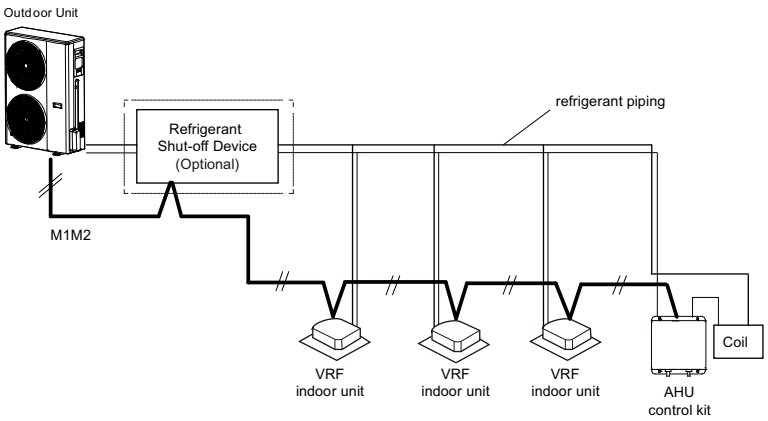

Fig. 46 —M1 M2 Communication Wiring Configuration

The communication wires should be connected to the outdoor unit terminals indicated in Figure 47 and Table 37.

⚠ CAUTION

- Communication wiring has polarity. Care should be taken to connect the poles correctly.
- Only the dedicated meter of Midea can be used on the unit.
- For the wiring method of the meter, please consult Midea's professional service personnel.
- The arrangement of OA and X Y depends on the unit.

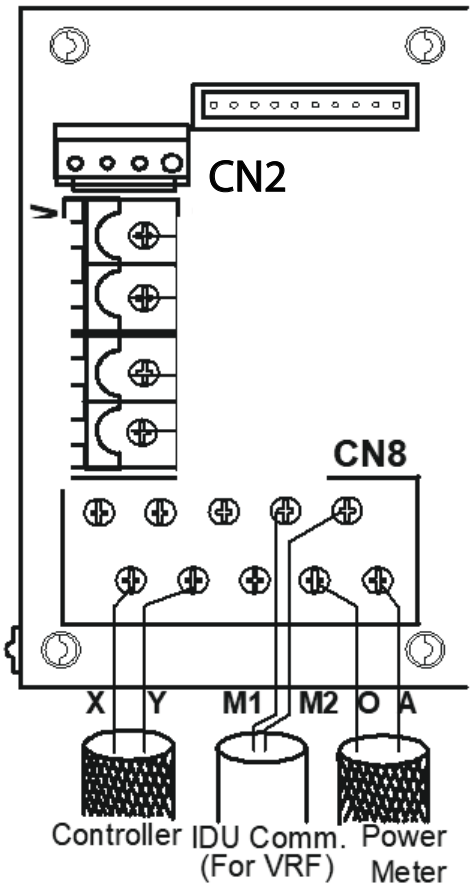

Fig. 47 —Outdoor Unit Communication Terminals

Table 37 — Communication Connections

Terminals	Connection
X Y	Connect to centralized controller or gateway
M1 M2	HyperLink communication connection between indoor units and outdoor unit
O A	Connect to Power Meter

INSTALLATION IN AREAS OF HIGH SALINITY

CAUTION

Do not install outdoor units where they could be directly exposed to sea air. Corrosion, particularly on the condenser and evaporator fins, could cause product malfunction or inefficient performance.

Outdoor units installed in seaside locations should be placed such as to avoid direct exposure to the sea air and additional anti-corrosion treatment options should be selected, otherwise the service life of the outdoor units will be seriously affected.

Air conditioning installed in seaside locations should be run regularly as the running of the outdoor unit fans helps prevent build-up of salt on the outdoor unit heat exchangers.

PLACEMENT AND INSTALLATION

Outdoor units should be installed 300m or more from the sea. If possible, well-ventilated indoor locations should be chosen. If it is necessary to install outdoor units outside, direct exposure to the sea air should be avoided. A canopy should be added to shield the units from sea air and rain.

Ensure that base structures drain well so that outdoor unit footings do not become waterlogged. Check that outdoor unit casing drainage holes are not blocked.

INSPECTION AND MAINTENANCE

In addition to standard outdoor unit servicing and maintenance, the following additional inspections and maintenance should be undertaken for outdoor units installed in seaside locations:

- A comprehensive post-installation inspection should check for any scratches or other damage to painted surfaces and any damaged areas should be repainted/repaired immediately.
- The units should be regularly cleaned using (non-salty) water to remove any salt that has accumulated. Areas cleaned should include the condenser, the refrigerant piping system, the outside surface of the unit casing and the outside surface of the electric control box.
- Regular inspections should check for corrosion and if necessary corroded components should be replaced and/or anti-corrosion treatments should be added.

Manufacturer reserves the right to change, at any time, specifications and designs without notice and without obligations.

COMMISSIONING

Before turning on the power to the indoor and outdoor units, ensure the following:

Table 38 — Pre-Commissioning Checks

Check list	Check or not
Read the complete installation and operation manual.	
Check that the units are properly installed, to avoid abnormal noises and vibrations when starting up the units.	
Compressor and others shipping brackets removed.	
The piping length and additional refrigerant charge are calculated and recorded on the table of the unit.	
Be sure that the stop valves are open on both liquid and gas side.	
All Controllers installed and all control wiring is installed and properly connected at each terminal block.	
All drain piping is connected, including indoor units, and insulated as required.	
Refrigerant piping are completely insulated including flare nut connections at indoor units.	
All ductwork is connected and air filters installed.	
Check that the air inlet and outlet of the unit is not obstructed by paper sheets, cardboard, or any other material.	
Be sure that the field wiring has been carried out according to the instructions described in the manual and according to the applicable legislation.	
Be sure that the earth wires have been connected properly and that the earth terminals are tightened.	
Insulation test of the main power circuit using a mega tester for 500 V, check that the insulation resistance of 2 MΩ or more is attained by applying a voltage of 500 V DC between power terminals and earth. Never use the mega tester for the communication wiring.	
Fuses, circuit breakers, or protection devices check that the fuses, circuit breakers, or the locally installed protection devices are of the specified size and type. Do not bypass a fuse and a protection device.	
Visually check the electrical component box and the inside of the unit for loose connections or damaged electrical components.	
Check for damaged components and extruded piping inside the unit.	
Consistency check between refrigeration piping and communication lines check and confirm that the refrigerant piping and communication lines connected to the indoor and outdoor units are belong to the same refrigeration system.	
Check for refrigerant leaks inside the unit. If there is a refrigerant leak, try to repair the leak. If the repair is not successful, please call the local agent. Do not come into contact with the refrigerant leaking from the refrigerant piping connections. It may cause frostbite.	
If there is a refrigerant leak, keep ventilation to avoid the risk of refrigerant stagnating. If a leak is suspected, all naked flames shall be removed/extinguished. If a leakage of refrigerant is found which requires brazing, all of the refrigerant shall be recovered from the system, or isolated (by means of shut off valves) in a part of the system remote from the leak.	
Line voltage is checked and verified to be within specified range for all system components.	
Power the outdoor units 12 hours before operation in order to have power running to the crankcase heater and to protect the compressor.	

Manufacturer reserves the right to change, at any time, specifications and designs without notice and without obligations.

OUTDOOR UNIT ADDRESSED AND COMMUNICATION TYPE SETTING

Before running a system for the first time, make sure all the settings you need to configure are completed. Set each outdoor unit's address and communication type between outdoor units and indoor unit by menu.

Step 1: Power on

Cover the lower panel of the ODU, and power on all IDUs and ODUs.

Step 2: Enter commissioning mode

Enter commissioning mode and start commissioning.

Step 3: Set the IDU type in a system

The digital display of the outdoor unit displays "01 _0", where 4th digits flashing. The 4th digit represents the type of indoor unit. The initial value is 0 which means indoor unit type is VRF indoor unit or AHU Control Kits.

Short press the Down or Up button to change the number.

Once the number of indoor unit type has been set, short press the OK button to confirm and automatically proceed to the next step.

Step 4: Set the number of IDU

The digital display of the outdoor unit displays "02 __" where 3rd and 4th digits flashing. Short press the Down or Up button to change the indoor unit amount.

Press OK to confirm. The system will set indoor unit addresses automatically. VRF Indoor Units only.

Step 5: IDU and ODUs address setting

Auto address: Enter the auto addressing function, the digital display of ODU flashes "AU Ad" and "X YZ" in rotation. "AU Ad" means the auto addressing is in progress, "X" represents the address of the ODU, "YZ" represents the number of detected IDUs.

Manual address: Set the addresses of each IDU separately by remote controller or wired controller.

Step 6: System initialization

Entering system initialization, the digital display of ODU flashes "AU Ad" and "X YZ" in rotation. "INIt" means initialization is in progress, "X" represents the address of the ODU, "YZ" represents the number of detected IDUs

Step 7: End

After system initialization, if there is no fault in the system, all ODUs will enter standby mode and the digital display will display "X YZ" (X represents the address of the ODUs, "YZ" represents the number of detected IDUs).

After system initialization, if the ODU detects a fault, the digital display of ODU will display "X YZ" (X represents the address of the ODU, "YZ" represents the number of detected IDUs) and the error code in rotation. Please refer to the Error Code Table for troubleshooting.

Step 8: Set the refrigerant shut-off device

If the refrigerant shut-off device is available, set the menu "n8A" to "1".

Step 9: Test run

Enter the test run mode by setting the menu "n11" to "2" on the ODU. When the digital display of the ODU displays "End", the test run has been completed successfully.

Manufacturer reserves the right to change, at any time, specifications and designs without notice and without obligations.

COMMISSIONING TRIAL RUNS

Commissioning Test Run of Single Refrigerant System

Once all the pre-commissioning checks in Part 3, "Pre-commissioning Checks" have been completed, a test run should be performed as described below and a Mini Series System Commissioning Report (see Part 3, "Appendix to Part 3 – System Commissioning Report") should be completed as a record of the operating status of the system during commissioning.

NOTE: When running the system for commissioning test runs, if the combination ratio is 100% or less, run all the indoor units and if the combination ratio is more than 100%, run indoor units with total capacity equal to the capacity of the outdoor unit.

The test run procedure is as follows:

1. Open the outdoor unit liquid and gas stop valves.
2. Turn on the power to the outdoor unit.
3. If manual addressing is being used, set the addresses of each indoor unit.
4. Leave the power on for a minimum of 12 hours prior to running the system to ensure that the crankcase heaters have heated the compressor oil sufficiently.
5. Run the system:
   a. Run the system in cooling mode with the following settings: temperature 62.6℉; fan speed high.
   b. After one hour, complete Sheet A of the system commissioning report then check the system parameters using the CHECK button on the outdoor unit's main PCB and complete the cooling mode columns of one Sheet D and one Sheet E of the system commissioning report for the outdoor unit.
   c. Run the system in heating mode with the following settings: temperature 86℉; fan speed high.
   d. After one hour, complete Sheet B of the system commissioning report then check the system parameters using the CHECK button on the outdoor unit's main PCB and complete the heating mode columns of one Sheet D and one Sheet E of the system commissioning report for the outdoor unit.
6. Finally, complete Sheet C of the system commissioning report.

Commissioning Test Run of Multiple Refrigerant Systems

Once the commissioning test run of each refrigerant system has been satisfactorily completed as per Part 3, "Commissioning test run of single refrigerant system", run the multiple systems that make up a project simultaneously and check for any abnormalities.

APPENDIX - SYSTEM COMMISSIONING REPORT

A total of up to 4 report sheets should be completed for each system:

- One Sheet A, one Sheet B and one Sheet C per system.
- One Sheet D per outdoor unit.

Table 39 — System Commissioning Report – Sheet A

SYSTEM INFORMATION			
Project name and location		**Customer company**	
System name		**Installation company**	
Commissioning date		**Agent company**	
Outdoor ambient temp.		**Commissioning engineer**	
Outdoor unit information	**Model**	**Serial no.**	**Power supply (V)**

COOLING MODE PARAMETER RECORD (After running in cooling mode for one hour)				
OUTDOOR UNIT				
Compressor suction pipe temperature		**Current (A)**		
System pressure at check port		**Within normal range?**		

INDOOR UNITS
(Sample of over 20% of the indoor units including the unit farthest from the outdoor unit)

Room no.	Model	Address	Set temp. (°F)	Inlet temp. (°F)	Outlet temp. (°F)	Drainage OK?	Abnormal noise/ vibration?

Table 40 — System Commissioning Report – Sheet B

SYSTEM INFORMATION			
Project name and location		Customer company	
System name		Installation company	
Commissioning date		Agent company	
Outdoor ambient temp.		Commissioning engineer	

Outdoor unit information	Model	Serial no.	Power supply (V)

OUTDOOR UNIT				
Compressor suction pipe temperature		Current (A)	
System pressure at check port		Within normal range?	

COOLING MODE PARAMETER RECORD
(After running in heating mode for one hour)

INDOOR UNITS
(Sample of over 20% of the indoor units including the unit farthest from the outdoor unit)

Room no.	Model	Address	Set temp. (°F)	Inlet temp. (°F)	Outlet temp. (°F)	Drainage OK?	Abnormal noise/ vibration?

Table 41 — System Commissioning Report – Sheet C

Project name and location		System name	

RECORD OF ISSUES SEEN DURING COMMISSIONING				
No.	**Description of observed issue**	**Suspected cause**	**Troubleshooting undertaken**	**Serial no. of relevant unit**
1				
2				
3				

OUTDOOR UNIT FINAL CHECKLIST	
SW2 system check performed?	
Any abnormal noise?	
Any abnormal vibration?	
Fan rotation normal?	

	Commissioning engineer	Dealer	Midea representative
Name:			
Signature:			
Date:			

Table 42 — System Commissioning Report – Sheet D

Project name and location		System name	

			Observed Values	
DSP1 content	Parameters displayed on DSP2	Remarks	Cooling mode	Heating mode
--.--	"Standby (ODU address+ IDU number)/frequency/special status"			
0.--	Outdoor unit address	Mini series outdoor unit: 0		
1.--	Outdoor unit capacity (Ton)	Actual value = value displayed		
2.--	Number of outdoor units	Mini series outdoor unit: 1		
3.--	Number of indoor units set	Actual value = value displayed		
4.--	Total capacity of outdoor units system (Ton)	Actual value = value displayed		
5.--	Target frequency of this ODU	Refer to Note 1		
6.--	Target frequency of outdoor unit system	Displacement frequency (1)*10		
7.--	Inverter compressor actual frequency (Hz)	Actual value = value displayed		
8.--	Reserved			
9.--	Operating mode	Refer to Note 2		
10.--	Fan1 speed index (rpm)	Actual value = value displayed		
11.--	Fan2 speed index (rpm)	Actual value = value displayed		
12.--	Indoor heat exchanger pipe (T2) average temperature (°C)	Actual value = value displayed		
13.--	Indoor heat exchanger pipe (T2B) average temperature (°C)	Actual value = value displayed		
14.--	Main heat exchanger pipe (T3) temperature (°C)	Actual value = value displayed		
15.--	Outdoor ambient (T4) temperature (°C)	Actual value = value displayed		
16.--	Liquid pipe (T5) temperature (°C)	Actual value = value displayed		
17.--	Outdoor unit coil temperature sensor (T3B/TL)	Actual value = value displayed		
18.--	Ambient temperature sensor (T10 temperature (°C)	Actual value = value displayed		
19.--	Inverter compressor A discharge (T7C1)temperature (°C)	Actual value = value displayed		
20.--	Reserved			
21.--	Reserved			
22.--	Reserved			
23.--	Reserved			
24.--	Inverter module heatsink (Ntc)temperature (°C)	Actual value = value displayed		
25.--	Suction temperature sensor (Tg)temperature (°C)	Actual value = value displayed		
26.--	Reserved			
27.--	Discharge superheat degree (°C)	Actual value = value displayed		
28.--	Primary current (A)	Actual value = value displayed /10		
29.--	Inverter compressor A current (A)	Actual value = value displayed /10		
30.--	Reserved			
31.--	EEVA position	Actual value = value displayed × 24		
32.--	Reserved			
33.--	Reserved			
34.--	EEVD position	Actual value = value displayed × 24		
35.--	Compressor discharge pressure (MPa)	Actual value = value displayed × 0.01		

			Observed Values	
DSP1 content	Parameters displayed on DSP2	Remarks	Cooling mode	Heating mode
36.--	Compressor suction pressure (MPa)	Actual value = value displayed × 0.01		
37.--	Number of indoor units online	Actual value = value displayed		
38.--	Number of indoor units operating	Displayed on master unit PCB only		
39.--	Heat exchanger status (outdoor unit)	Refer to Note 3		
40.--	Special mode	Refer to Note 4		
41.--	Silent mode	0-5 ,6 represents the most silent		
42.--	Reserved			
43.--	Target evaporator (Tes) temperature (°C)	Actual value = value displayed Refer to Note 5		
43.--	Target condenser (Tcs) temperature (°C)	Actual value = value displayed Refer to Note 5		
45.--	DC Voltage (V)	Actual value = value displayed		
46.--	AC Voltage (V)	Actual value = value displayed		
47.---	Number of cooling mode IDUs	Actual value = value displayed		
48.--	Number of heating mode IDUs	Actual value = value displayed		
49.--	Capacity of cooling mode IDUs	Actual value = value displayed		
50.--	Capacity of heating mode IDUs	Actual value = value displayed		
51.--	Reserved			
52.---	Reserved			
53.--	Fan error code			
54.---	Software version			
55.--	Last error code			
56.--	System Set	Refer to Note 6		
-- --	--	End		

NOTES:

1. **Need to convert to current compressor output volume. For 1.5/2.0 ton: compressor output volume is 24, Target frequency = Actual frequency * 24 / 60; for 2.5-5.0 ton: compressor output volume is 42, Target frequency = Actual frequency * 42 / 60..**
2. **Operating mode:**
   0: off; 2: cooling; 3: heating.
3. **Heat exchanger status:**
   0: off; 1: C1 : Condenser 2: D1: Reserved; 3: D2: Reserved; 4: E1: Evaporator; 5: F1 : Reserved; 6: F2: Reserved
4. **Special mode:**
   0: no special mode; 1: oil return; 2: defrost; 3: start up; 4: stop; 5: quick check; 6: self cleaning.
5. **Te: Low pressure equivalent saturation temperature (°C) Tes: Target Te value.**
   Tc: High pressure equivalent saturation temperature (°C) Tcs: Target Tc value.
6. **System Set:**
   0: VRF; 1: Split

© 2025 Carrier. All rights reserved.

Manufacturer reserves the right to change, at any time, specifications and designs without notice and without obligations.