Installation and Maintenance Instructions

CONTENTS

Page
SAFETY CONSIDERATIONS 1
GENERAL 2
INSTALLATION 10
Step 1 — Unpack and Inspect Units 10
Step 2 — Position the Unit 11
Step 3 — Connect Refrigerant Piping 15
Step 4 — Pressure and Vacuum Test System 22
Step 5 — Adjust Refrigerant Charge 22
Step 6 — Complete Electrical Connections 22
Network Communication Wiring for Combination of Touch Screen Central Controller and BACnet 25
START-UP 28
Trial Run 28
Unit Settings 29
MAINTENANCE 30
Advanced Settings 31
Snow-Blowing Functions. 31
Pre-Start Check 31

SAFETY CONSIDERATIONS

Improper installation, adjustment, alteration, service, maintenance, or use can cause explosion, fire, electrical shock, or other conditions that may cause death, personal injury or property damage. The qualified installer or agency must use factory-authorized kits or accessories when modifying this product.

Follow all safety codes. Wear safety glasses, protective clothing, and work gloves. Use quenching cloth for brazing operations. Have fire extinguisher available. Read these instructions thoroughly and follow all warnings or cautions included in literature and attached to the unit. Consult local building codes and the current editions of the National Electrical Code (NEC) ANSI/NFPA (American National Standards Institute/National Fire Protection Association) 70. In Canada, refer to the current editions of the Canadian Electrical Code CSA (Canadian Standards Association) C22.1.

Understand signal words — **DANGER**, **WARNING**, and **CAUTION**. **DANGER** identifies the most serious hazards, which will result in severe personal injury or death. **WARNING** signifies hazards that could result in personal injury or death. **CAUTION** is used to identify unsafe practices, which would result in minor personal injury or product and property damage.

Recognize safety information. This is the safety-alert symbol (⚠). When this symbol is displayed on the unit and in instructions or manuals, be alert to the potential for personal injury. Installing, starting up, and servicing equipment can be hazardous due to system pressure, electrical components, and equipment location.

⚠ WARNING

Electrical shock can cause personal injury and death. Shut off all power to this equipment during installation. There may be more than one disconnect switch. Tag all disconnect locations to alert others not to restore power until work is completed.

Manufacturer reserves the right to discontinue, or change at any time, specifications or designs without notice and without incurring obligations.

⚠ WARNING

When installing the equipment in a small space, provide adequate measures to avoid refrigerant concentration exceeding safety limits due to refrigerant leak. In case of refrigerant leak during installation, ventilate the space immediately. Failure to follow this procedure may lead to personal injury.

⚠ WARNING

DO NOT USE TORCH to remove any component. System contains oil and refrigerant under pressure.

To remove a component, wear protective gloves and goggles and proceed as follows:

a. Shut off electrical power to unit.
b. Recover refrigerant to relieve all pressure from system using both high-pressure and low pressure ports.
c. Traces of vapor should be displaced with nitrogen and the work area should be well ventilated. Refrigerant in contact with an open flame produces toxic gases.
d. Cut component connection tubing with tubing cutter and remove component from unit. Use a pan to catch any oil that may come out of the lines and as a gage for how much oil to add to the system.
e. Carefully unsweat remaining tubing stubs when necessary. Oil can ignite when exposed to torch flame.

Failure to follow these procedures may result in personal injury or death.

⚠ CAUTION

DO NOT re-use compressor oil or any oil that has been exposed to the atmosphere. Dispose of oil per local codes and regulations. DO NOT leave refrigerant system open to air any longer than the actual time required to service the equipment. Seal circuits being serviced and charge with dry nitrogen to prevent oil contamination when timely repairs cannot be completed. Failure to follow these procedures may result in damage to equipment.

GENERAL

The VRF (variable refrigerant flow) Heat Pump system offers a variety of indoor unit types and sizes, ranging from 0.5 to 8 tons. The 38VMA Heat Pump outdoor units are available in four capacities, 6, 8, 10, and 12 tons. Units can be combined to accommodate larger capacity requirements. The system has capability to operate between 50% and 135% connected capacity, allowing the system to be tailored to the needs of the customer and the application.

The equipment is initially protected under the manufacturer's standard warranty; however, the warranty is provided under the condition that the steps outlined in this manual for initial inspection, proper installation, regular periodic maintenance, and everyday operation of the unit be followed in detail. This manual should be fully reviewed in advance before initial installation, start-up, and maintenance. Contact your local sales representative or the factory with any questions BEFORE proceeding.

See Fig. 1 for model number nomenclature. Table 1 shows components that may or may not be used for a particular installation. Table 2 lists physical data for each unit size. Tables 4-7 list physical data for combination units. Figure 2 shows unit dimensions.

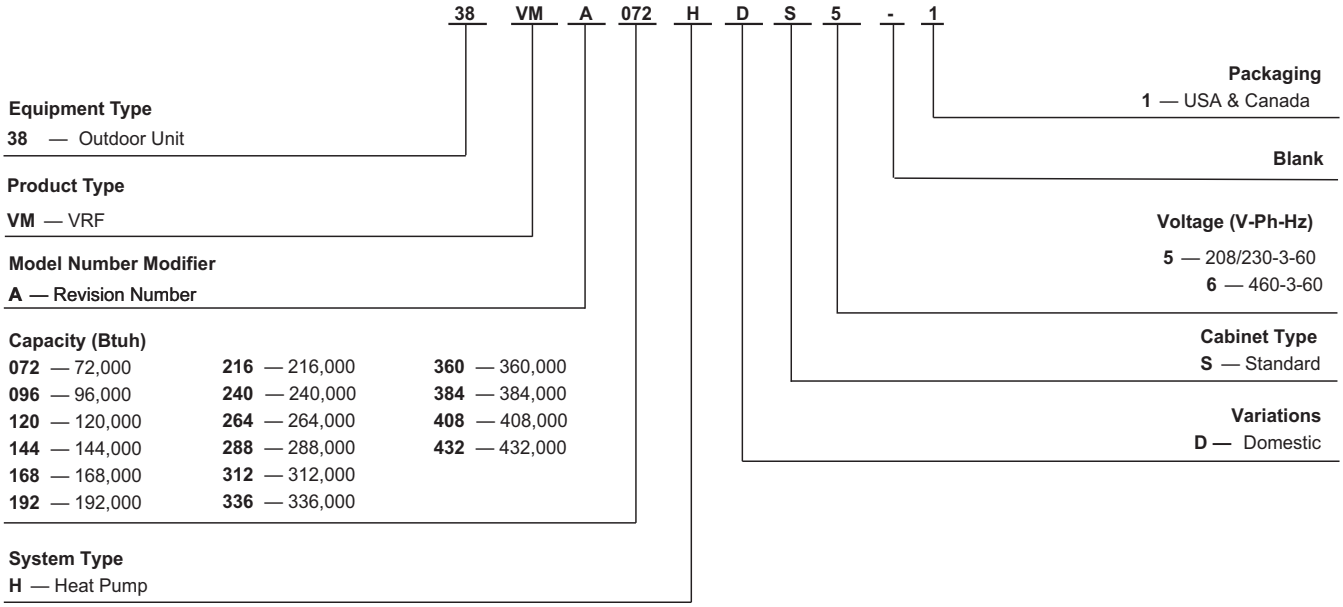

Fig. 1 —Nomenclature

Table 1 — Components Shipped with Unit

NAME	SHAPE	QUANTITY	FUNCTION
Seal plug		8	For maintenance
Simple wrench	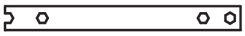	1	For removing the side plate screws
90 degree elbow	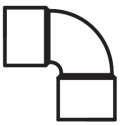	2 (Sizes 072, 096, and 120) 1 (Size 144)	For outdoor unit and refrigerant pipe connection
Connective pipe accessories	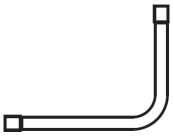	3	
	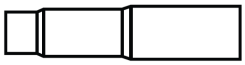	1 (Sizes 072, 096, and 120 only)	
		1	
Network Resistor		2	Enhances stability of communication
Ring terminal		4	For connecting the power wire

Table 2 — 38VMH Physical Data 208/230V Single Units

UNIT		072	096	120	144
NOMINAL TONS (Ton)		6	8	10	12
POWER SUPPLY (V-Ph-Hz)*		208/230-3-60			
COOLING CAPACITY WITH NON-DUCTED INDOOR UNITS†					
Nominal (kBtu/h)		72.0	90.0	117.6	142.8
Rated (kBtu/h)		69.0	92.0	112.0	136.0
HEATING CAPACITY WITH NON-DUCTED INDOOR UNITS†					
Nominal (kBtu/h)		80.0	108.0	126.0	160.0
Rated (kBtu/h)		77.0	103.0	120.0	150.0
ELECTRICAL CHARACTERISTICS WITH NON-DUCTED INDOOR UNITS					
Cooling	Power Consumption (kW)	4.10	6.20	8.80	12.10
	EER (Btu/W)	14.10	13.20	11.70	10.60
Heating	Power Consumption (kW)	4.50	7.20	9.00	12.10
	COP (W/W)	4.29	3.82	3.60	3.40
ELECTRICAL CHARACTERISTICS WITH DUCTED INDOOR UNITS					
Cooling	Power Consumption (kW)	5.10	7.50	9.60	12.30
	EER (Btu/W)	12.80	11.80	11.20	10.60
Heating	Power Consumption (kW)	5.60	8.00	9.80	12.60
	COP (W/W)	3.85	3.63	3.45	3.35
UNIT DIMENSIONS (W x H x D) (in.)		52-3/4 x 64-3/8 x 31-1/8			
UNIT NET WEIGHT (lb)**		659			780
COMPRESSOR					
Type		Hermetic Scroll Compressor (Inverter Driven)			
Motor Output (kW)		23.25			22.9+13.8
FAN UNIT					
Air Volume (cfm)		7650		8250	8830
Motor Output (W)		270 (x2)			340+300
Condenser Coil	Coil Qty.	1			
	Ft^2	30-1/8			
	Rows	2			
	FPI	16			
REFRIGERANT SHIPPING CHARGE (lb)††		37.5			
ELECTRICAL SPECIFICATIONS					
MCA (A)††		45	46		70
Recommended Fuse Size (A)		50			80
REFRIGERANT CONNECTING PORT DIAMETER					
Gas Side (in.)		7/8		1-1/8	
Liquid Side (in.)		3/8		1/2	
Balance Pipe (in.)		1/4			
OPERATION TEMPERATURE RANGE					
Cooling (F db)		5~125			
Heating (F wb)		-5~64			
MAX ESP (in. wg)		0.08			
MAX NUMBER OF CONNECTED INDOOR UNITS		13	16	20	26
MAXIMUM CAPACITY OF COMBINED INDOOR UNITS ***		50% to 135%			
SOUND PRESSURE LEVEL (db(A))†††		62.5	63.0		65.5

LEGEND
COP — Coefficient of Performance
db — Dry Bulb
EER — Energy Efficiency Ratio
ESP — External Static Pressure
wb — Wet Bulb

* The source of voltage must not fluctuate more than ± 10%.
† Rated conditions:
Cooling: Indoor air temperature 80°F dry bulb / 67°F wet bulb,
Outdoor air temperature 95°F dry bulb.
Heating: 70°F dry bulb, Outdoor air temperature 47°F dry bulb / 43°F wet bulb.
** Units are shown as 230V [460V]. If there are no brackets, units are the same for 230V and 460V.
†† The amount does not consider extra piping length. Refrigerant must be added on site in accordance with the actual piping length.
*** In case the diversity exceeds 135%, the type of indoor unit is limited and the maximum number of indoor unit is reduced.
††† These values, measured in anechoic chamber, at a point 1m in front of the unit at a height of 1.4m. During actual operation, these values are normally some what higher as a result of ambient conditions.

Table 3 — 38VMH Physical Data 460V Single Units

UNIT		072	096	120	144
NOMINAL TONS (Ton)		6	8	10	12
POWER SUPPLY (V-Ph-Hz)*		460-3-60			
COOLING CAPACITY WITH NON-DUCTED INDOOR UNITS†					
Nominal (kBtu/h)		72.0	90.0	117.6	142.8
Rated (kBtu/h)		69.0	92.0	112.0	136.0
HEATING CAPACITY WITH NON-DUCTED INDOOR UNITS†					
Nominal (kBtu/h)		80.0	108.0	126.0	160.0
Rated (kBtu/h)		77.0	103.0	120.0	150.0
ELECTRICAL CHARACTERISTICS WITH NON-DUCTED INDOOR UNITS					
Cooling	Power Consumption (kW)	4.10	6.20	8.80	12.10
	EER (Btu/W)	14.10	13.20	11.70	10.60
Heating	Power Consumption (kW)	4.50	7.20	9.00	12.10
	COP (W/W)	4.29	3.82	3.60	3.40
ELECTRICAL CHARACTERISTICS WITH DUCTED INDOOR UNITS					
Cooling	Power Consumption (kW)	5.10	7.50	9.60	12.30
	EER (Btu/W)	12.80	11.80	11.20	10.60
Heating	Power Consumption (kW)	5.60	8.00	9.80	12.60
	COP (W/W)	3.85	3.63	3.45	3.35
UNIT DIMENSIONS (W x H x D) (in.)		52-3/4 x 64-3/8 x 31-1/8			
UNIT NET WEIGHT (lb)**		659			780
COMPRESSOR					
Type		Hermetic Scroll Compressor (Inverter Driven)			
Motor Output (kW)		23.25			22.9+13.8
FAN UNIT					
Air Volume (cfm)		7650		8250	8830
Motor Output (W)		270 (x2)			340+300
Condenser Coil	Coil Qty.	1			
	Ft^2	30-1/8			
	Rows	2			
	FPI	16			
REFRIGERANT SHIPPING CHARGE (lb)††		37.5			
ELECTRICAL SPECIFICATIONS					
MCA (A)††		22	25		33
Recommended Fuse Size (A)		30			40
REFRIGERANT CONNECTING PORT DIAMETER					
Gas Side (in.)		7/8		1-1/8	
Liquid Side (in.)		3/8		1/2	
Balance Pipe (in.)		1/4			
OPERATION TEMPERATURE RANGE					
Cooling (F db)		5~125			
Heating (F wb)		-5~64			
MAX ESP (in. wg)		0.08			
MAX NUMBER OF CONNECTED INDOOR UNITS		13	16	20	26
MAXIMUM CAPACITY OF COMBINED INDOOR UNITS ***		50% to 135%			
SOUND PRESSURE LEVEL (db(A))†††		62.5	63.0		65.5

LEGEND
COP — Coefficient of Performance
db — Dry Bulb
EER — Energy Efficiency Ratio
ESP — External Static Pressure
wb — Wet Bulb

* The source of voltage must not fluctuate more than ± 10%.
† Rated conditions:
Cooling: Indoor air temperature 80°F dry bulb / 67°F wet bulb,
Outdoor air temperature 95°F dry bulb.
Heating: 70°F dry bulb, Outdoor air temperature 47°F dry bulb / 43°F wet bulb.
** Units are shown as 230V [460V]. If there are no brackets, units are the same for 230V and 460V.
†† The amount does not consider extra piping length. Refrigerant must be added on site in accordance with the actual piping length.
*** In case the diversity exceeds 135%, the type of indoor unit is limited and the maximum number of indoor unit is reduced.
††† These values, measured in anechoic chamber, at a point 1m in front of the unit at a height of 1.4m. During actual operation, these values are normally some what higher as a result of ambient conditions.

Table 4 — 38VMH Physical Data 208/230V Combination Units (2 Units)

COMBINATION UNIT MODEL NUMBER		168	192	216	240	264	288
COMBINATION UNITS		096	096	120	120	144	144
		072	096	096	120	120	144
NOMINAL CAPACITY (tons)		14	16	18	20	22	24
POWER SUPPLY (V-Ph-Hz)*		208/230-3-60					
COOLING CAPACITY WITH NON-DUCTED INDOOR UNITS†							
Nominal (kBtu/h)		163.8	184.8	205.8	224.7	258.3	283.5
Rated (kBtu/h)		156.0	176.0	196.0	214.0	246.0	270.0
HEATING CAPACITY WITH NON-DUCTED INDOOR UNITS†							
Nominal (kBtu/h)		188.0	216.0	234.0	252.0	286.0	320.0
Rated (kBtu/h)		180.0	206.0	224.0	240.0	270.0	300.0
ELECTRICAL CHARACTERISTICS WITH NON-DUCTED INDOOR UNITS							
Cooling	Power Consumption (kW)	11.00	12.90	15.30	18.60	23.90	27.00
	EER (Btu/W)	12.50	12.30	11.70	10.70	9.70	9.50
Heating	Power Consumption (kW)	12.40	14.70	16.70	18.40	22.80	26.00
	COP (W/W)	3.80	3.75	3.62	3.54	3.27	3.20
ELECTRICAL CHARACTERISTICS WITH DUCTED INDOOR UNITS							
Cooling	Power Consumption (kW)	12.40	14.50	16.60	18.70	24.20	27.40
	EER (Btu/W)	12.00	11.60	11.30	11.00	9.80	9.50
Heating	Power Consumption (kW)	13.90	16.10	17.80	19.50	23.80	26.40
	COP (W/W)	3.64	3.60	3.54	3.47	3.20	3.20
UNIT DIMENSIONS (W X H X D) (in.)		52-3/4 (x2) x 64-3/8 x 31-1/8					
UNIT NET WEIGHT (lb)		659 (x2)				780 + 659	780 (x2)
COMPRESSOR							
Type		Hermetic Scroll Compressor (Inverter Driven)					
Motor Output (kW)		23.25 (x2)				23.25 + 22.90 + 13.80	22.90 (x2) + 13.80 (x2)
FAN UNIT							
Air Volume		7650 (x2)		8250 + 7650	8250 (x2)	8830 + 8250	8830 (x2)
Motor Output (W)		270 (x4)				340 + 300 + 270 (x2)	340 (x2) + 300 (x2)
Condenser Coil	Coil Qty.	2					
	Ft^2 (per coil)	30-1/8					
	Rows	2					
	FPI	16					
REFRIGERANT SHIPPING CHARGE (lb)**		37.5 (x2)					
ELECTRICAL SPECIFICATIONS							
MCA (A)††		46 + 45	46 (x2)			70 + 46	70 (x2)
Recommended Fuse Size (A)		50 (x2)				80 + 50	80 (x2)
REFRIGERANT CONNECTING PORT DIAMETER							
Gas Side (in.)		1-1/8				1-3/8	
Liquid Side (in.)		5/8				3/4	
Balance Pipe (in.)		1/4					
OPERATION TEMPERATURE RANGE							
Cooling (F db)		5~125					
Heating (F wb)		-5~64					
MAX ESP (in. wg)		0.08					
MAX NUMBER OF CONNECTED INDOOR UNITS		29	33	36	39	46	50
MAX CAPACITY OF COMBINED INDOOR UNITS***		50% to 135%					
SOUND PRESSURE LEVEL (DB(A)) †††		65				66.5	67.5

LEGEND
COP — Coefficient of Performance
db — Dry Bulb
EER — Energy Efficiency Ratio
ESP — External Static Pressure
wb — Wet Bulb

* The source of voltage must not fluctuate more than ± 10%.
† Rated conditions:
Cooling: Indoor air temperature 80°F dry bulb / 67°F wet bulb, Outdoor air temperature 95°F dry bulb.
Heating: 70°F dry bulb, Outdoor air temperature 47°F dry bulb / 43°F wet bulb.
** Units are shown as 230V [460V]. If there are no brackets, units are the same for 230V and 460V.
†† The amount does not consider extra piping length. Refrigerant must be added on site in accordance with the actual piping length.
*** In case the diversity exceeds 135%, the type of indoor unit is limited and the maximum number of indoor unit is reduced.
††† These values, measured in anechoic chamber, at a point 1m in front of the unit at a height of 1.4m. During actual operation, these values are normally some what higher as a result of ambient conditions.

Table 5 — 38VMH Physical Data 460V Combination Units (2 Units)

COMBINATION UNIT MODEL NUMBER		168	192	216	240	264	288
COMBINATION UNITS		096	096	120	120	144	144
		072	096	096	120	120	144
NOMINAL CAPACITY (tons)		14	16	18	20	22	24
POWER SUPPLY (V-Ph-Hz)*		460-3-60					
COOLING CAPACITY WITH NON-DUCTED INDOOR UNITS†							
Nominal (kBtu/h)		163.8	184.8	205.8	224.7	258.3	283.5
Rated (kBtu/h)		156.0	176.0	196.0	214.0	246.0	270.0
HEATING CAPACITY WITH NON-DUCTED INDOOR UNITS†							
Nominal (kBtu/h)		188.0	216.0	234.0	252.0	286.0	320.0
Rated (kBtu/h)		180.0	206.0	224.0	240.0	270.0	300.0
ELECTRICAL CHARACTERISTICS WITH NON-DUCTED INDOOR UNITS							
Cooling	Power Consumption (kW)	11.00	12.90	15.30	18.60	23.90	27.00
	EER (Btu/W)	12.50	12.30	11.70	10.70	9.70	9.50
Heating	Power Consumption (kW)	12.40	14.70	16.70	18.40	22.80	26.00
	COP (W/W)	3.80	3.75	3.62	3.54	3.27	3.20
ELECTRICAL CHARACTERISTICS WITH DUCTED INDOOR UNITS							
Cooling	Power Consumption (kW)	12.40	14.50	16.60	18.70	24.20	27.40
	EER (Btu/W)	12.00	11.60	11.30	11.00	9.80	9.50
Heating	Power Consumption (kW)	13.90	16.10	17.80	19.50	23.80	26.40
	COP (W/W)	3.64	3.60	3.54	3.47	3.20	3.20
UNIT DIMENSIONS (W X H X D) (in.)		52-3/4 (x2) x 64-3/8 x 31-1/8					
UNIT NET WEIGHT (lb)		659 (x2)				772 + 659	772 (x2)
COMPRESSOR							
Type		Hermetic Scroll Compressor (Inverter Driven)					
Motor Output (kW)		23.25 (x2)				23.25 + 22.90 + 13.80	22.90 (x2) + 13.80 (x2)
FAN UNIT							
Air Volume		7650 (x2)		8250 + 7650	8250 (x2)	8250 + 8830	8830 (x2)
Motor Output (W)		270 (x4)				270 (x2) + 300 + 340	300 (x2) + 340 (x2)
Condenser Coil	Coil Qty.	2					
	Ft² (per coil)	30-1/8					
	Rows	2					
	FPI	16					
REFRIGERANT SHIPPING CHARGE (lb)**		37.5 (x2)					
ELECTRICAL SPECIFICATIONS							
MCA (A)††		25 + 22	25 (x2)			33 + 25	33 (x2)
Recommended Fuse Size (A)		30 + 25	30 (x2)			35 + 30	35 (x2)
REFRIGERANT CONNECTING PORT DIAMETER							
Gas Side (in.)		1-1/8				1-3/8	
Liquid Side (in.)		5/8				3/4	
Balance Pipe (in.)		1/4					
OPERATION TEMPERATURE RANGE							
Cooling (F db)		5~125					
Heating (F wb)		-5~64					
MAX ESP (in. wg)		0.08					
MAX NUMBER OF CONNECTED INDOOR UNITS		29	33	36	39	46	50
MAX CAPACITY OF COMBINED INDOOR UNITS***		50% to 135%					
SOUND PRESSURE LEVEL (DB(A)) †††		65.0				66.5	67.5

LEGEND
COP — Coefficient of Performance
db — Dry Bulb
EER — Energy Efficiency Ratio
ESP — External Static Pressure
wb — Wet Bulb

* The source of voltage must not fluctuate more than ± 10%.
† Rated conditions:
Cooling: Indoor air temperature 80°F dry bulb / 67°F wet bulb, Outdoor air temperature 95°F dry bulb.
Heating: 70°F dry bulb, Outdoor air temperature 47°F dry bulb / 43°F wet bulb.
** Units are shown as 230V [460V]. If there are no brackets, units are the same for 230V and 460V.
†† The amount does not consider extra piping length. Refrigerant must be added on site in accordance with the actual piping length.
*** In case the diversity exceeds 135%, the type of indoor unit is limited and the maximum number of indoor unit is reduced.
††† These values, measured in anechoic chamber, at a point 1m in front of the unit at a height of 1.4m. During actual operation, these values are normally some what higher as a result of ambient conditions.

Table 6 — 38VMH Physical Data 208/230V Combination Units (3 Units)

COMBINATION UNIT MODEL NUMBER		312	336	360	384	408	432
COMBINATION UNITS		120	120	120	144	144	144
		096	120	120	120	144	144
		096	096	120	120	120	144
NOMINAL TONS (Ton)		26	28	30	32	34	36
POWER SUPPLY (V-Ph-Hz)*		208/230-3-60					
COOLING CAPACITY WITH NON-DUCTED INDOOR UNITS†							
Nominal (kBtu/h)		298.2	319.2	342.3	373.8	399.0	420.0
Rated (kBtu/h)		284.0	304.0	326.0	356.0	380.0	400.0
HEATING CAPACITY WITH NON-DUCTED INDOOR UNITS†							
Nominal (kBtu/h)		342.0	360.0	378.0	412.0	446.0	480.0
Rated (kBtu/h)		320.0	338.0	354.0	384.0	410.0	440.0
ELECTRICAL CHARACTERISTICS WITH NON-DUCTED INDOOR UNITS							
Cooling	Power Consution (kW)	24.10	27.00	30.55	34.90	38.60	40.70
	EER (Btu/W)	11.10	10.70	10.20	9.80	9.50	9.50
Heating	Power Consumption (kW)	25.90	28.50	31.00	33.70	36.10	38.90
	COP (W/W)	3.43	3.31	3.20	3.20	3.20	3.20
ELECTRICAL CHARACTERISTICS WITH DUCTED INDOOR UNITS							
Cooling	Power Consumption (kW)	25.70	27.40	29.90	35.90	38.30	40.30
	EER (Btu/W)	10.60	10.60	10.40	9.50	9.50	9.50
Heating	Power Consumption (kW)	27.30	29.20	31.00	33.60	35.90	38.50
	COP (W/W)	3.30	3.25	3.20	3.20	3.20	3.20
UNIT DIMENSIONS (W x H x D)		52-3/4 (x3) x 64-3/8 x 31-1/8					
UNIT NET WEIGHT (lb)		659 (x3)			780 + 659 (x2)	780 (x2) + 659	780 (x3)
COMPRESSOR							
Type		Hermetic Scroll Compressor (Inverter Driven)					
Motor Output (kW)		23.25 (x3)			23.25 (x2) + 22.90 + 13.80	23.25 + 22.9 (x2) + 13.8 (x2)	22.9 (x3) + 13.8 (x3)
FAN UNIT							
Air Volume (cfm)		8250 + 7650 (x2)	8250 (x2) + 7650	8250 (x3)	8830 + 8250 (x2)	8830 (x2) + 8250	8830 (x3)
Motor Output (W)		270 (x6)			340 + 300 + 270 (x4)	340 (x2) + 300 (x2) + 270 (x2)	340 (x3) + 300 (x3)
Condenser Coil	Coil Qty.	3					
	Ft^2 (per coil)	30-1/8					
	Rows	2					
	FPI	16					
REFRIGERANT SHIPPING CHARGE (lb)**		37.5 (x3)					
ELECTRICAL SPECIFICATIONS							
MCA (A)††		46 (x3)			70 + 46 (x2)	70 (x2) + 46	70 (x3)
Recommended Fuse Size (A)		50 (x3)			80 + 50 (x2)	80 (x2) + 50	80 (x3)
REFRIGERANT CONNECTING PORT DIAMETER							
Gas Side (in.)		1-3/8					
Liquid Side (in.)		3/4					
Balance Pipe (in.)		1/4					
OPERATION TEMPERATURE RANGE							
Cooling (F db)		5~125					
Heating (F wb)		-5~64					
MAX ESP (in. wg)		0.08					
MAX NUMBER OF CONNECTED INDOOR UNITS		53	56	59	63	64	64
MAXIMUM CAPACITY OF COMBINED INDOOR UNITS***		50% to 135%					
SOUND PRESSURE LEVEL (db(A))†††		66.5			67.0	68.5	69.0

LEGEND
COP — Coefficient of Performance
db — Dry Bulb
EER — Energy Efficiency Ratio
ESP — External Static Pressure
wb — Wet Bulb

* The source of voltage must not fluctuate more than ± 10%.
† Rated conditions:
Cooling: Indoor air temperature 80°F dry bulb / 67°F wet bulb, Outdoor air temperature 95°F dry bulb.
Heating: 70°F dry bulb, Outdoor air temperature 47°F dry bulb / 43°F wet bulb.
** Units are shown as 230V [460V]. If there are no brackets, units are the same for 230V and 460V.
†† The amount does not consider extra piping length. Refrigerant must be added on site in accordance with the actual piping length.
*** In case the diversity exceeds 135%, the type of indoor unit is limited and the maximum number of indoor unit is reduced.
††† These values, measured in anechoic chamber, at a point 1m in front of the unit at a height of 1.4m. During actual operation, these values are normally some what higher as a result of ambient conditions.

Table 7 — 38VMH Physical Data 460V Combination Units (3 Units)

COMBINATION UNIT MODEL NUMBER		312	336	360	384	408	432
COMBINATION UNITS		120	120	120	144	144	144
		096	120	120	120	144	144
		096	096	120	120	120	144
NOMINAL TONS (Ton)		26	28	30	32	34	36
POWER SUPPLY (V-Ph-Hz) *		460-3-60					
COOLING CAPACITY WITH NON-DUCTED INDOOR UNITS †							
Nominal (kBtu/h)		298.2	319.2	342.3	373.8	399.0	420.0
Rated (kBtu/h)		284.0	304.0	326.0	356.0	380.0	400.0
HEATING CAPACITY WITH NON-DUCTED INDOOR UNITS †							
Nominal (kBtu/h)		342.0	360.0	378.0	412.0	446.0	480.0
Rated (kBtu/h)		320.0	338.0	354.0	384.0	410.0	440.0
ELECTRICAL CHARACTERISTICS WITH NON-DUCTED INDOOR UNITS							
Cooling	Power Consumption (kW)	24.10	27.00	30.50	34.90	38.60	40.70
	EER (Btu/W)	11.10	10.70	10.20	9.80	9.50	9.50
Heating	Power Consumption (kW)	25.90	28.50	31.00	33.70	36.10	38.90
	COP (W/W)	3.43	3.31	3.20	3.20	3.20	3.20
ELECTRICAL CHARACTERISTICS WITH DUCTED INDOOR UNITS							
Cooling	Power Consumption (kW)	25.70	27.40	29.90	35.90	38.30	40.30
	EER (Btu/W)	10.60	10.60	10.40	9.50	9.50	9.50
Heating	Power Consumption (kW)	27.30	29.20	31.00	33.60	35.90	38.50
	COP (W/W)	3.30	3.25	3.20	3.20	3.20	3.20
UNIT DIMENSIONS (W x H x D)		52-3/4 (x3) x 64-3/8 x 31-1/8					
UNIT NET WEIGHT (lb)		659 (x3)			772 + 659 (x2)	772 (x2) + 659	772 (x3)
COMPRESSOR							
Type		Hermetic Scroll Compressor (Inverter Driven)					
Motor Output (kW)		23.25 (x3)			23.25 (x2) + 22.90 + 13.8	23.25 + 22.90 (x2) + 13.8 (x2)	22.9 (x3) + 13.8 (x3)
FAN UNIT							
Air Volume (cfm)		8250 + 7650 (x2)	8250 (x2) + 7650	8250 (x3)	8830 + 8250 (x2)	8830 (x2) + 8250	8830 (x3)
Motor Output (W)		270 (x6)			340 + 300 + 270 (x4)	340 (x2) + 300 (x2) + 270 (x2)	340 (x3) + 300 (x3)
Condenser Coil	Coil Qty.	3					
	Ft^2 (per coil)	30-1/8					
	Rows	2					
	FPI	16					
REFRIGERANT SHIPPING CHARGE (lb)**		37.5 (x3)					
ELECTRICAL SPECIFICATIONS							
MCA (A)††		25 (x3)			33 + 25 (x2)	33 (x2) + 25	33 (x3)
Recommended Fuse Size (A)		30 (x3)			35 + 30 (x2)	35 (x2) + 30	35 (x3)
REFRIGERANT CONNECTING PORT DIAMETER							
Gas Side (in.)		1-3/8					
Liquid Side (in.)		3/4					
Balance Pipe (in.)		1/4					
OPERATION TEMPERATURE RANGE							
Cooling (F db)		5~125					
Heating (F wb)		-5~64					
MAX ESP (in. wg)		0.08					
MAX NUMBER OF CONNECTED INDOOR UNITS		53	56	59	63	64	64
MAXIMUM CAPACITY OF COMBINED INDOOR UNITS***		50% to 135%					
SOUND PRESSURE LEVEL (db(A))†††		66.5			67.0	68.5	69.0

LEGEND
COP — Coefficient of Performance
db — Dry Bulb
EER — Energy Efficiency Ratio
ESP — External Static Pressure
wb — Wet Bulb
LEGEND

* The source of voltage must not fluctuate more than ± 10%.
† Rated conditions:
Cooling: Indoor air temperature 80°F dry bulb / 67°F wet bulb, Outdoor air temperature 95°F dry bulb.
Heating: 70°F dry bulb, Outdoor air temperature 47°F dry bulb / 43°F wet bulb.
** Units are shown as 230V [460V]. If there are no brackets, units are the same for 230V and 460V.
†† The amount does not consider extra piping length. Refrigerant must be added on site in accordance with the actual piping length.
*** In case the diversity exceeds 135%, the type of indoor unit is limited and the maximum number of indoor unit is reduced.
††† These values, measured in anechoic chamber, at a point 1m in front of the unit at a height of 1.4m. During actual operation, these values are normally some what higher as a result of ambient conditions.

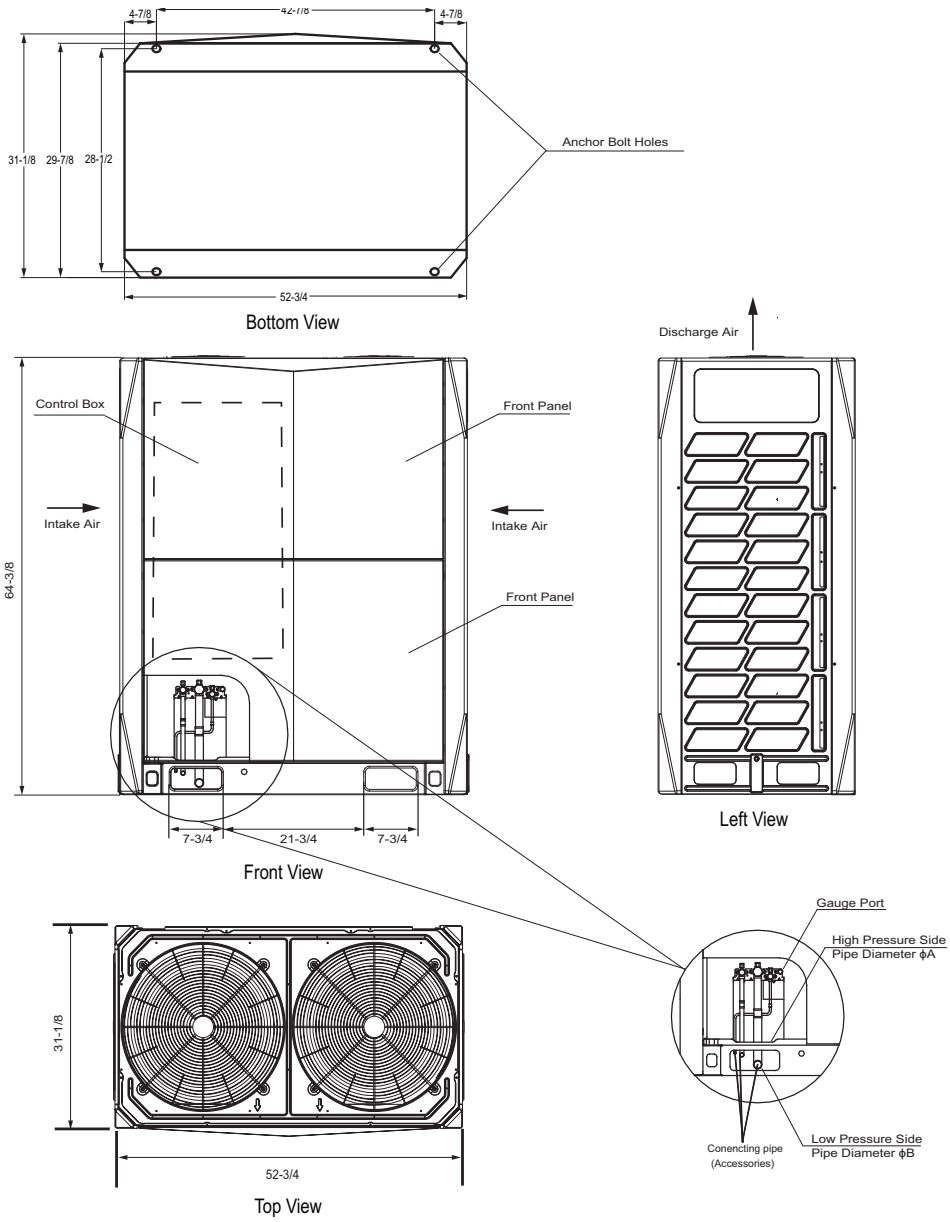

NOTE: All dimensions shown in inches.

Fig. 2 —38VMH Dimensions

INSTALLATION

Step 1 — Unpack and Inspect Units — Units are packaged for shipment to avoid damage during normal transit and handling. It is the receiving party's responsibility to inspect the equipment upon arrival. Any obvious damage to the carton and/or its contents should be reported on the bill of lading, and a claim should be filed with the transportation company and the factory. The unit should always be stored in a dry place and in the proper orientation as marked on the carton.

After determining the condition of the unit exterior, carefully remove the packaging and inspect for hidden damage. Check to make sure that items such as thermostats and controllers. are accounted for whether packaged separately or shipped at a later date. Any hidden damage should be recorded, a claim should be filed with the transportation company, and the factory should be notified. In the event a claim for shipping damage is filed; the unit, shipping carton, and all packing must be retained for physical inspection by the transportation company. All units should be stored in the factory shipping carton with internal packaging in place until installation.

PROTECTING UNITS FROM DAMAGE — Do not apply force or pressure to the coil, piping, or drain stub-outs during handling. All units should be handled using proper forklift holes or lifting locations.

Unit must always be properly supported. Temporary supports used during installation or service must be adequate to hold unit securely. To maintain warranty, protect units against hostile environments, theft, vandalism, and debris on jobsite. Do not allow foreign material to fall into unit. Failure to do so may have serious adverse effects on unit operation. Failure of any unit caused by deposits of foreign material inside the unit will not be covered by the manufacturer's warranty. Some units and/or job conditions may require some form of temporary covering during construction.

PREPARING JOBSITE FOR UNIT INSTALLATION — To save time and to reduce the possibility of costly errors, set up a complete sample installation in a typical location at

jobsite. Check all critical dimensions such as pipe and wire connection requirements. Refer to job drawings and product dimension drawings as required. Instruct all trades in their parts of the installation. Units must be installed in compliance with all applicable local code requirements.

IDENTIFYING AND PREPARING UNITS — Be sure power requirements match the available power source. Refer to unit nameplate and wiring diagram. In addition:

- Check all tags on unit to determine if shipping screws are to be removed. Remove screws as directed.
- Rotate the fan blade by hand to ensure that the fan is unrestricted and can rotate freely. Check for shipping damage and fan obstructions.

Step 2 — Position the Unit — Units are recommended for outdoor use. For single unit installation, see Fig. 3. For multiple or parallel unit installation, see Fig. 4. Unit should be mounted on concrete and fastened to anchor bolts to prevent unit from tipping. Units installed in areas that are exposed to ambient temperatures below freezing (32°F) should be installed on a snow/ice stand as defined by local codes.

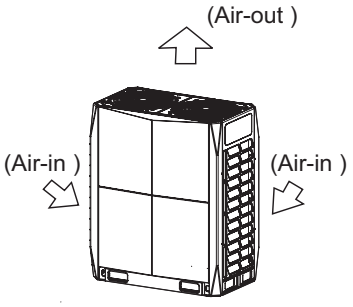

Fig. 3 —Single Unit Installation

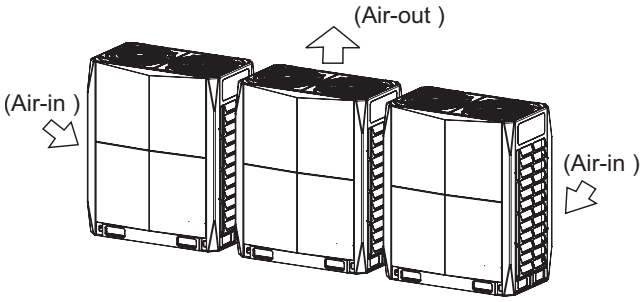

Fig. 4 —Multiple or Parallel Unit Installation

HANDLING THE UNIT — The angle of inclination should not be more than 15 degrees when carrying the unit to avoid overturn of the unit.

Forklift handling: — When using a forklift for lifting or transporting the unit, insert the prongs of the forklift into the rectangular holes as shown in Fig. 5.

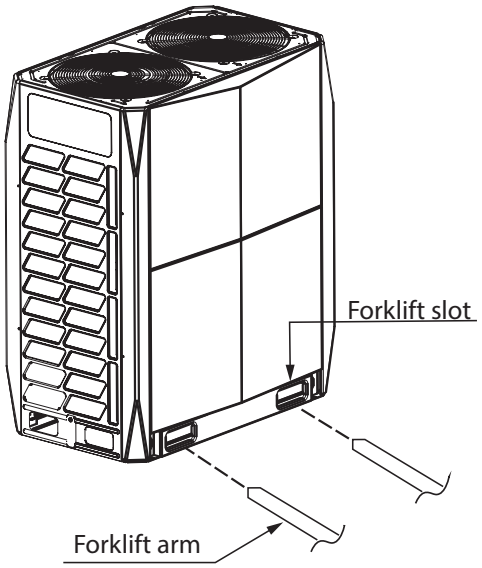

Fig. 5 —Handling the Unit Using a Forklift

Lifting the unit: Make sure the lifting cable is able to withstand the weight of the unit. Connect the cables to the bottom rigging hole locations shown in Fig. 6. Use 2 cables, each connected diagonally to bottom rigging hole locations. Make sure each cable is at least 26 feet long to avoid excess tension and force on the surfaces of the unit. To avoid damage to the unit from lifting cables; 2 inch thick wood, cloth, or cardboard spacers should be installed between cables and contact surfaces of the unit.

⚠DANGER

Do not stand below unit while it is suspended in the air. If unit falls, it will lead to severe personal injury or death.

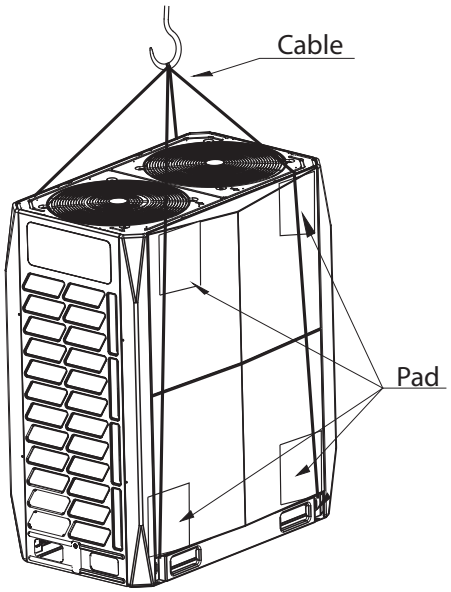

Fig. 6 —Lifting the Unit with Cables

CONCRETE BASE REQUIREMENTS

- The unit's base must be made of solid concrete.
- Ensure that the base is level and that the weight of the unit is distributed evenly.
- Create an outlet near the base for drainage.
- Ensure the roof can handle the unit weight if mounted on the roof.
- When piping from the bottom of the unit, the base height should be no less than 8 inches. See Fig. 7 and 8 for additional specifications.

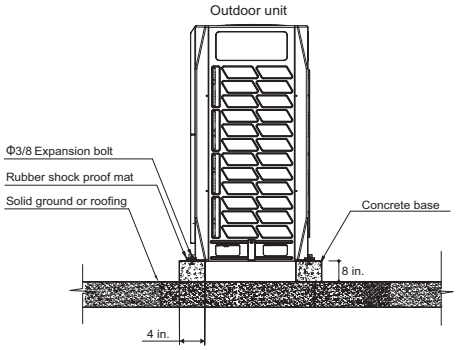

Fig. 7 —Concrete Base (Side View)

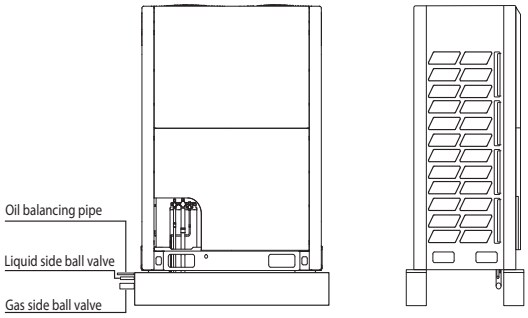

Fig. 8 —Concrete Base (Front and Side View)

OUTDOOR UNIT PLACEMENT — Systems with more than one outdoor unit should be sequenced from highest capacity to lowest capacity as shown in Fig. 9. The unit with the largest capacity will be addressed as the header unit and will be directly connected to the first branch joint at its outlet.

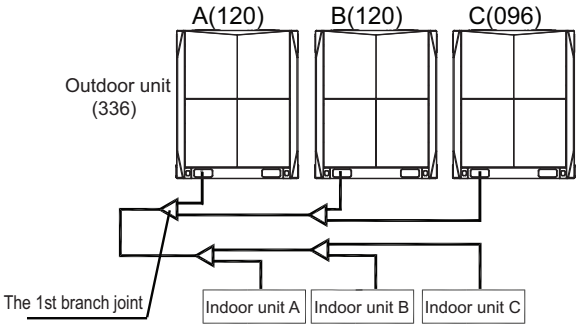

Fig. 9 —Outdoor Unit Placement

SPACE REQUIRED FOR INSTALLATION AND MAINTENANCE — Ensure there is enough space provided for installation and maintenance. See Fig. 10 below.

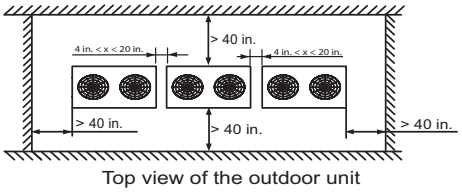

Fig. 10 —Space Required for Maintenance

If the outdoor unit is higher than the surrounding obstacle, follow Figs. 11-13.

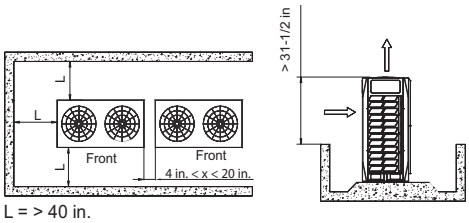

Fig. 11 —Space Required for One Row

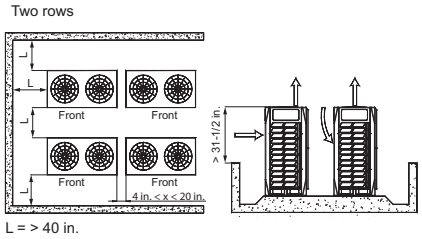

Fig. 12 —Space Required for Two Rows

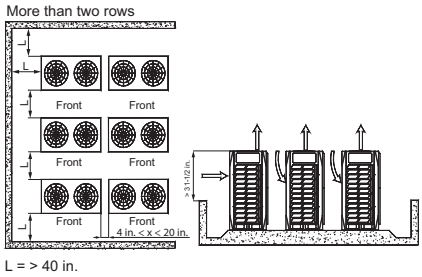

Fig. 13 —Space Required for More Than Two Rows

If the outdoor unit is lower than the surrounding obstacles, add a field-supplied duct to deflect condenser air flow as shown in Fig. 14.

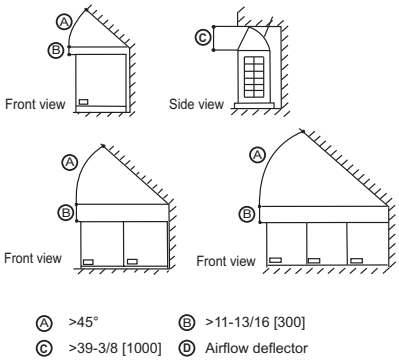

Fig. 14 —Condenser Air Flow Deflector

NOTE: A discharge air flow deflector is needed if vertical separation, C, from the top of the unit to any obstruction above the ODU is less than 8 feet.

MOUNT THE AIR DEFLECTOR —

Model 072-144 Installation Instructions

Example A

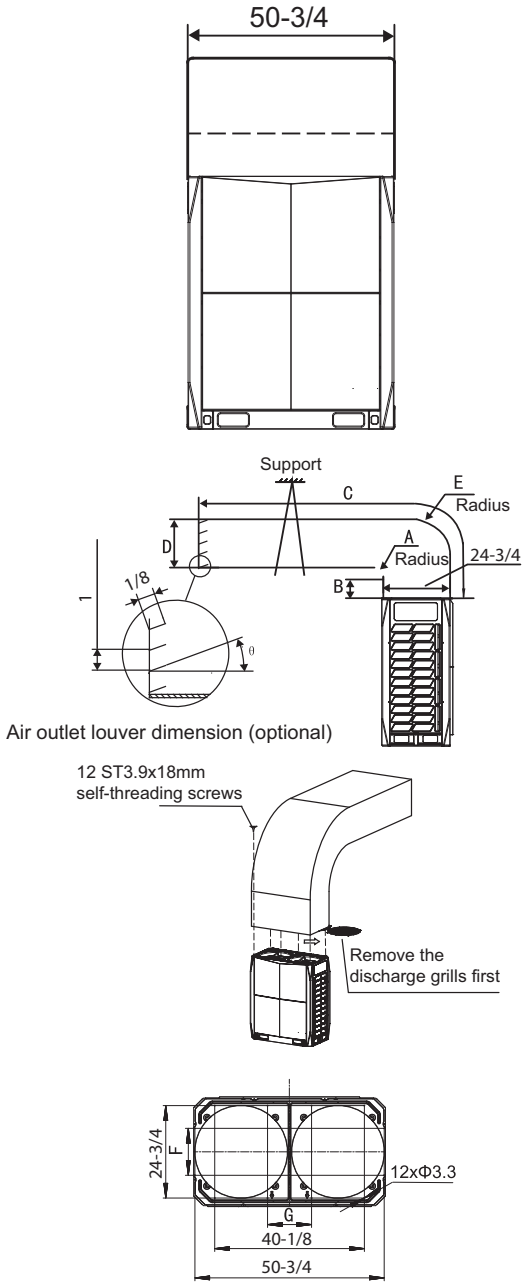

A	A≥11-7/8
B	B≥9-7/8
C	C≤118-1/8
D	24-3/4≤D≤26
E	E=A+24-3/4
F	12-5/8
G	11-7/8
θ	θ≤15°

NOTE: All dimensions are shown in inches.

Fig. 15 —072-144 Model Installation Instruction (Example A)

Example B

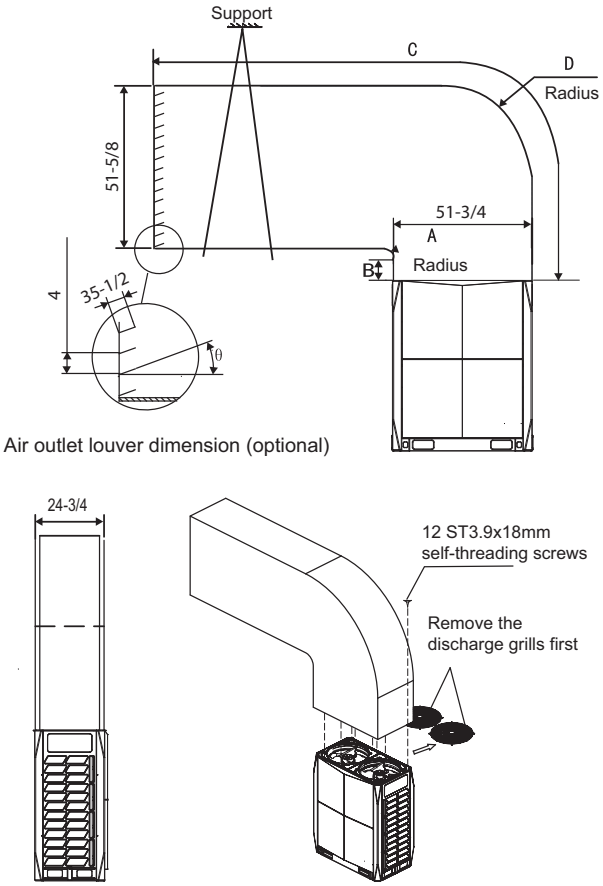

A	A≥11-7/8
B	B≥9-7/8
C	C≤118-1/8
D	D=A+50-3/4
θ	θ≤15°

NOTE: All dimensions are shown in inches.

Fig. 16 —072-144 Model Installation Instruction (Example B)

Static Pressure	Remark
0Pa	Factory default
0~20Pa	Remove discharge grille and connect to the wind duct which is less than 3 meters
Above 20Pa	To enable operation for high static pressure, set the function setting as shown in Table 8:

Table 8 — Static Pressure Ranges

Setting	Pressure
n 82	20 pa [0.08 in. WG]
n 83	40 pa [0.16 in. WG]
n 84	60 pa [0.24 in. WG]

NOTES:

- Before installing the air deflector, ensure the discharge grille has been taken off, otherwise the air supply efficiency would be reduced.
- Once mounting the air outlet louver to the duct, air volume, cooling and heating capacity, and efficiency may be reduced. Thus, it is not recommend to mount an air outlet louver. If use is necessary, adjust the air outlet louver to no more than 15°.
- Only one bend is allowed in the air duct to avoid operational issues.
- Install a soft connection between the air duct and the unit to reduce noise.
- The discharge air duct should be flush with the top of the unit and not fit over it. This could obstruct unit side panels.
- Discharge air ducts must be installed independently. Discharge air deflectors cannot be combined between units. The following figure shows improper installation.

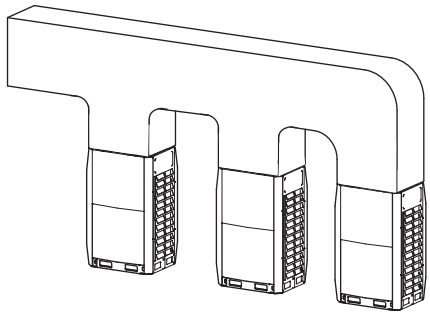

Fig. 17 —Improper installation of discharge air deflectors

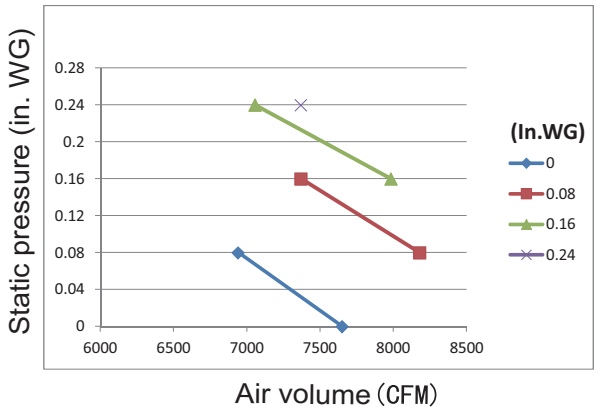

Fig. 18 —Static pressure vs. airflow (072 and 096 models)

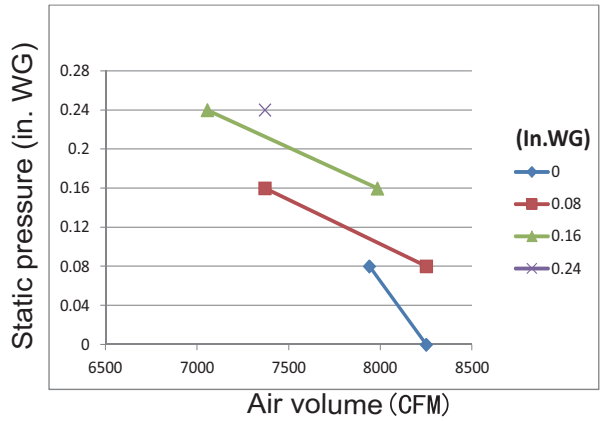

Fig. 19 —Static pressure vs. airflow (120 models)

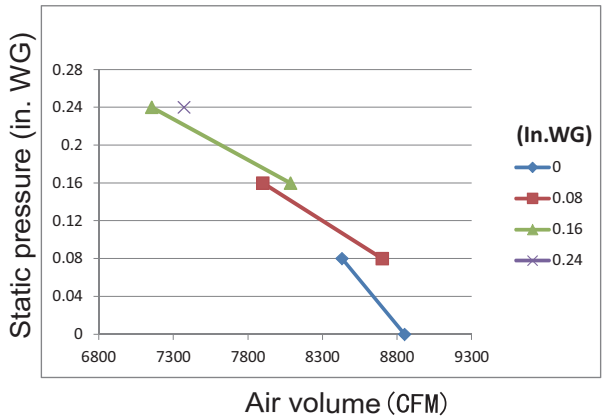

Fig. 20 —Static pressure vs. airflow (144 models)

SNOW GUARD INSTALLATION — To protect the outdoor unit coil from snow accumulation in certain climates, snow guards are recommended to be installed in the field. Refer to snow guard installation manual for dimensional drawings for field fabrication and additional information on snow guards.

The outdoor unit must be mounted at least 12 inches off the ground or 12 inches above the average snow accumulation depth, whichever is greater. Refer to snow guard installation manual for more details.

Clearances for sides and back of outdoor unit must be at least 16 inches greater than standard installation guidelines.

ACCESSING REFRIGERANT AND ELECTRICAL CONNECTIONS — To access electrical and refrigerant connections follow the steps below.

Removing the Upright Posts — Remove the four screws from the left and right upright posts as shown in Fig. 21.

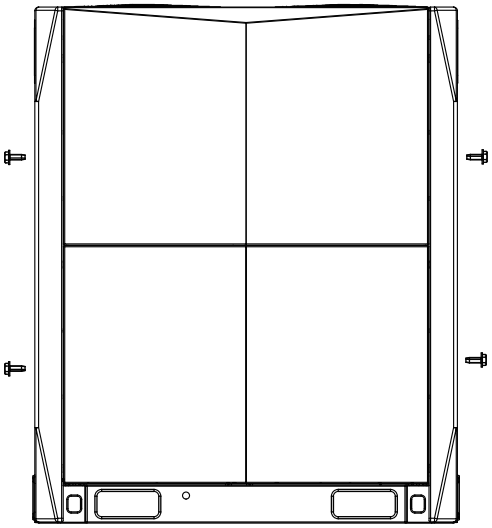

Fig. 21 —Removing the Upright Post Screws

Rotate the upright posts 5° to 10°. Lift them up about 2mm to remove as shown in Fig. 22.

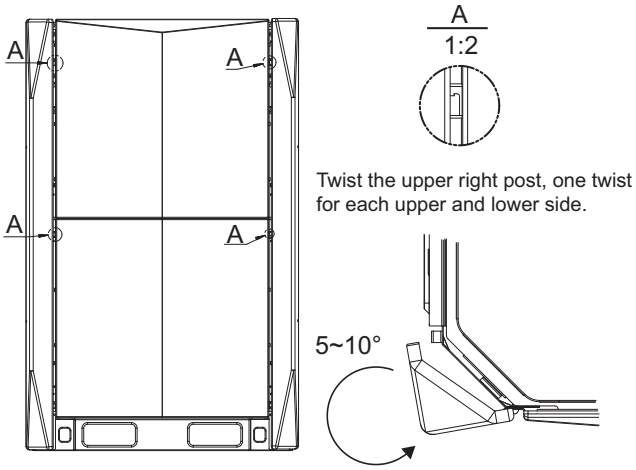

Fig. 22 —Removing the Upright Posts

Removing the Side Panels — Remove the four screws on the top and bottom side panels. Lift them up about 1/8 inch and remove as shown in Fig. 23.

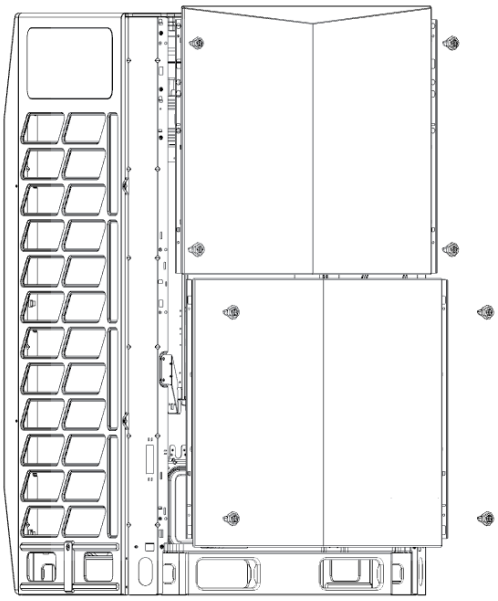

Fig. 23 —Removing the Front Panel

Step 3 — Connect Refrigerant Piping

REFRIGERANT PIPING CONNECTIONS — Figure 24 describes each refrigerant pipe. When making refrigerant piping connections follow these steps:

1. Remove valve caps and make sure valves are closed.
2. Use a pipe cutter to remove small pipe caps.
3. Use a torch to remove the large pipe caps.
4. Create a small hole in the rubber gasket and feed the connecting pipes through the hole as shown in Fig. 25.
5. Wrap a wet cloth around the valves before brazing.
6. Braze each connecting pipe to its corresponding valve as shown in Fig. 26.
7. Brazing should be performed under constant flow of high-purity nitrogen to prevent oxidation and contamination within the piping.

NOTE: The rubber gasket is to prevent nesting of animals.

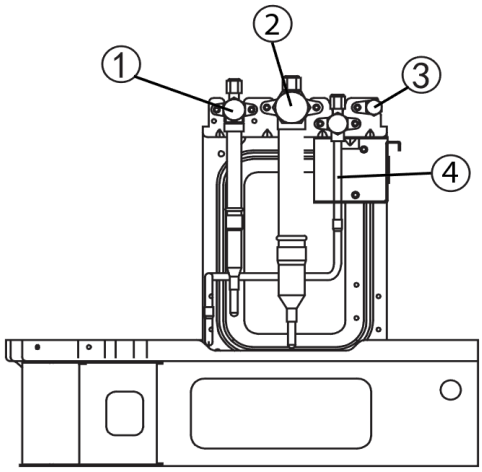

LEGEND

1 — Liquid side ball valve (high pressure)

2 — Gas side ball valve (Low pressure)

3 — Service port (For pressure testing and refrigerant charging)

4 — Oil balancing pipe*

* For a single module, it is not necessary to connect the oil balance pipe.

Fig. 24 —Pipe Descriptions

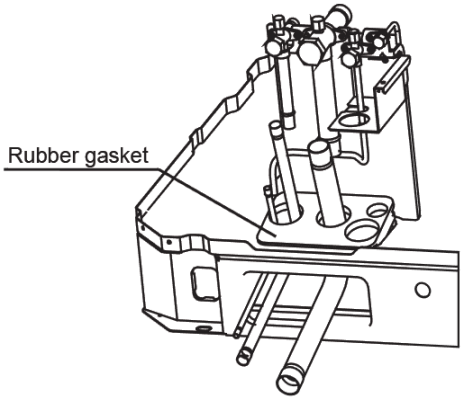

Fig. 25 —Rubber Gasket Locations

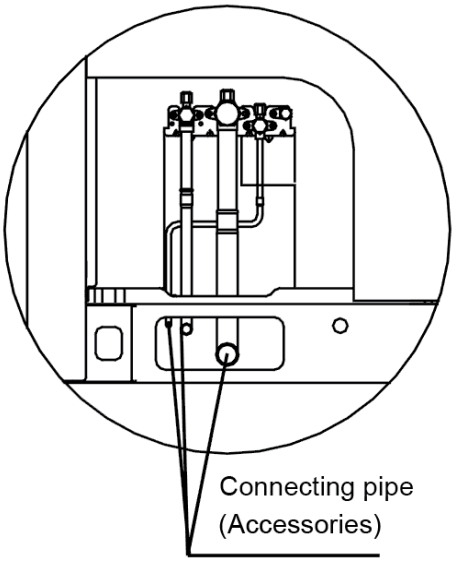

Fig. 26 —Accessory Connecting Pipes

REFRIGERANT PIPING MEASUREMENTS — Figure 27 and Table 9 show pipe length measurements when connecting the outdoor units to indoor units.

The reduced length of the branch joint is 1.6 feet of the equivalent length.

The inner units should be as equal as possible to be installed on both sides of the U-shape branch joint.

The allowable length of the first branch joint, which connected to the indoor unit, should be equal to or shorter than 131 feet. However, when the conditions described in Table 9 are met, the allowable length can be extended to 295 feet. Table 10 shows allowable conditions for increasing refrigerant pipe diameters.

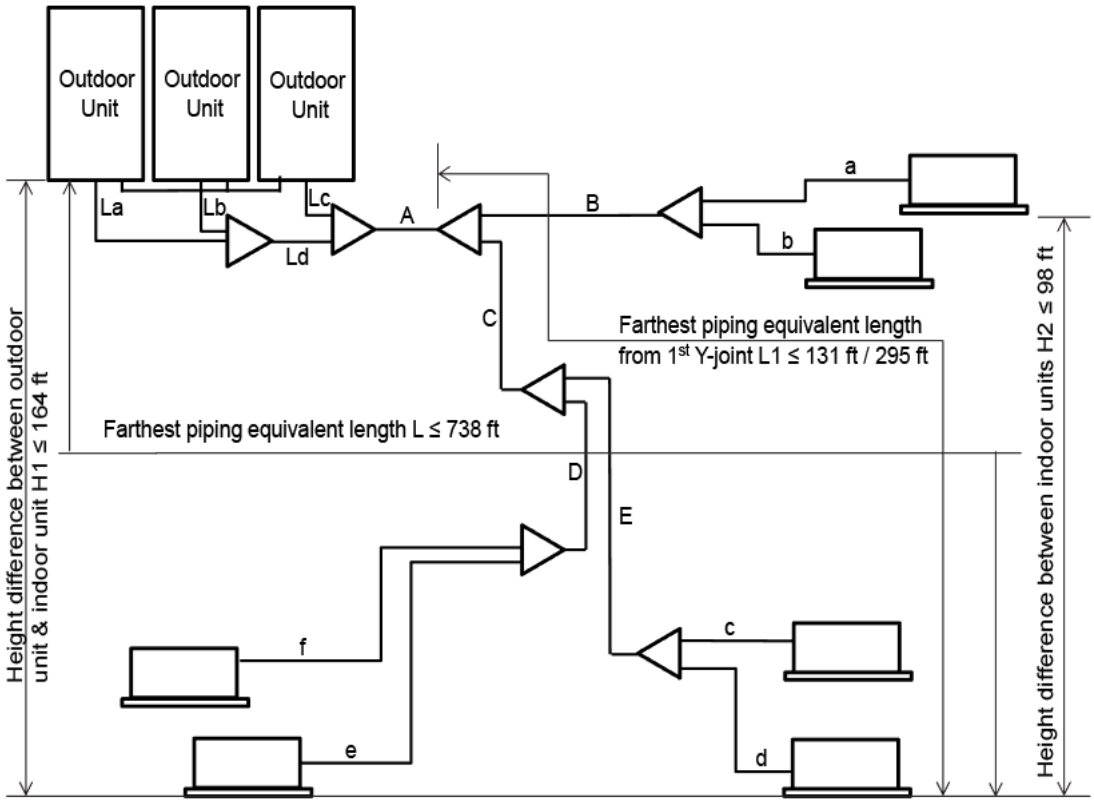

Fig. 27 —Piping Lengths and Drop Height

Table 9 — Permitted Pipe Lengths and Drop Heights

DESCRIPTION			ALLOWABLE VALUE (ft)	PIPES
Piping Length	Total Extension of Pipe (Liquid Pipe)	Actual Length	3280	La + Lb + Lc + Ld + A + (B + C + D + E) x 2 + a + b + c + e + f
	Distance Between Outdoor Units	Actual Length	13	La, Lb, Lc, and Ld
	Furthest Piping Length L	Equivalent Length	≤ 738	La + Ld + A + C + E + d
		Actual Length	≤ 656	
	Furthest Equivalent Piping Length From the First Y-Joint L1		≤ 131 / 295	C + E + d
Height Difference	Height Between Outdoor and Indoor Unit H1	Outdoor Unit Above	164	---
		Outdoor Unit Below	131	---
	Height Between Indoor Units H2		98	---

Table 10 — Extending Pipe Diameters

CONDITION	PIPES TO INCREASE	INCREASED PIPE SIZE
If distance from the first Y-joint to the last Y-joint (pipes C+E+d) is ≥ 131 ft or ≤ to 295 ft	B, C, D, E	ø $^{3}/_{8}$ in. ⟶ ø $^{1}/_{2}$ in. ø $^{5}/_{8}$ in. ⟶ ø $^{3}/_{4}$ in. ø $^{7}/_{8}$ in. ⟶ ø 1-$^{1}/_{8}$ in. ø 1-$^{3}/_{8}$ in. ⟶ ø 1-$^{5}/_{8}$ in. ø $^{1}/_{2}$ in. ⟶ ø $^{5}/_{8}$ in. ø $^{3}/_{4}$ in. ⟶ ø $^{7}/_{8}$ in. ø 1-$^{1}/_{8}$ in. ⟶ ø 1-$^{3}/_{8}$ in.

CONNECTING THE OUTDOOR UNITS

1. When connecting the refrigerant pipes between outdoor units, the pipes should be placed horizontally.
2. Do not run pipes above the pipe outlets.
3. All connecting pipes coming out of the outdoor units must be at the same level as shown in Fig 28.

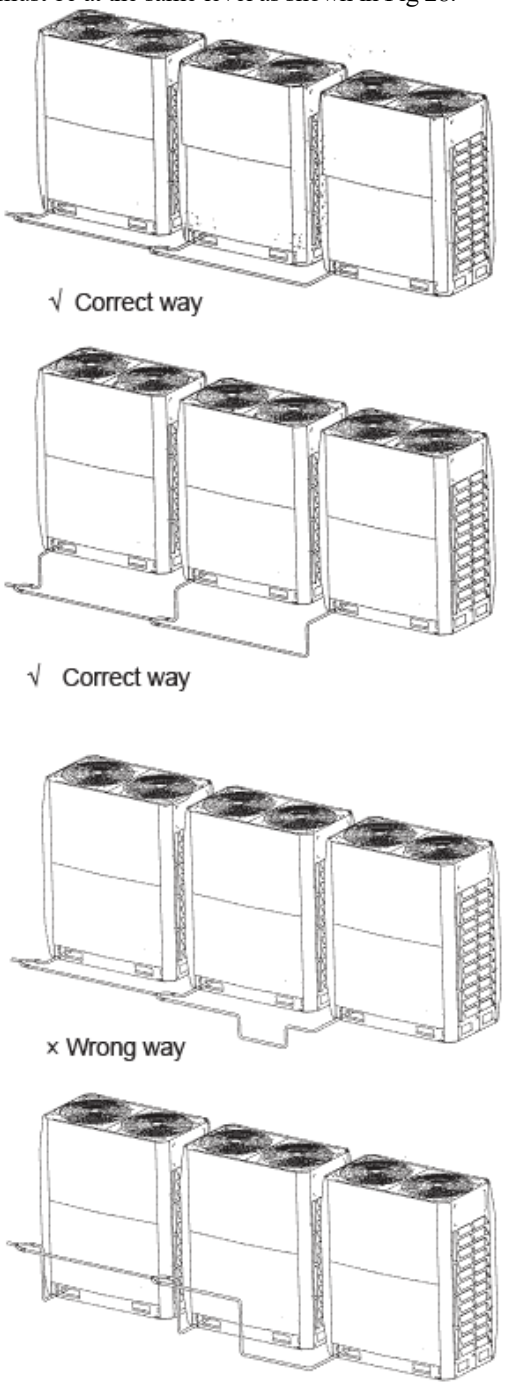

Fig. 28 —Correct Refrigerant Pipe Setup

4. The branch joint must be installed parallel to the ground, and the angle of the joint should not be greater than 10°. Positioning the branch joint more than 10° from parallel can cause malfunctions. See Fig. 29 and 30 for correct positioning of the joint.

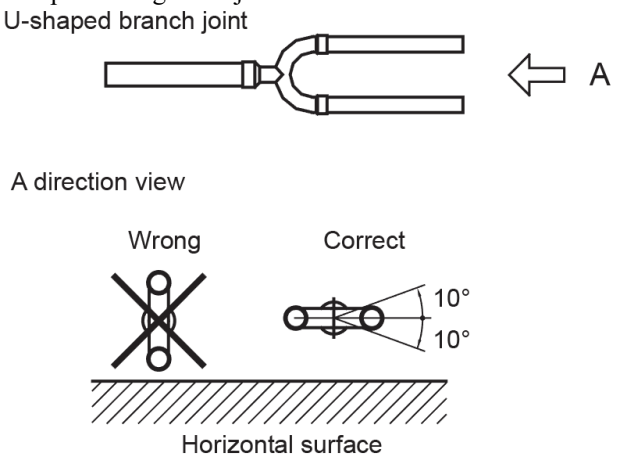

Fig. 29 —Correct Branch Joint Positioning

5. To avoid oil accumulating in the system, install the branch joints properly.
6. See Fig. 31 for typical refrigerant piping layout.
7. See Tables 11-19 for piping diameters and branch joint selection.

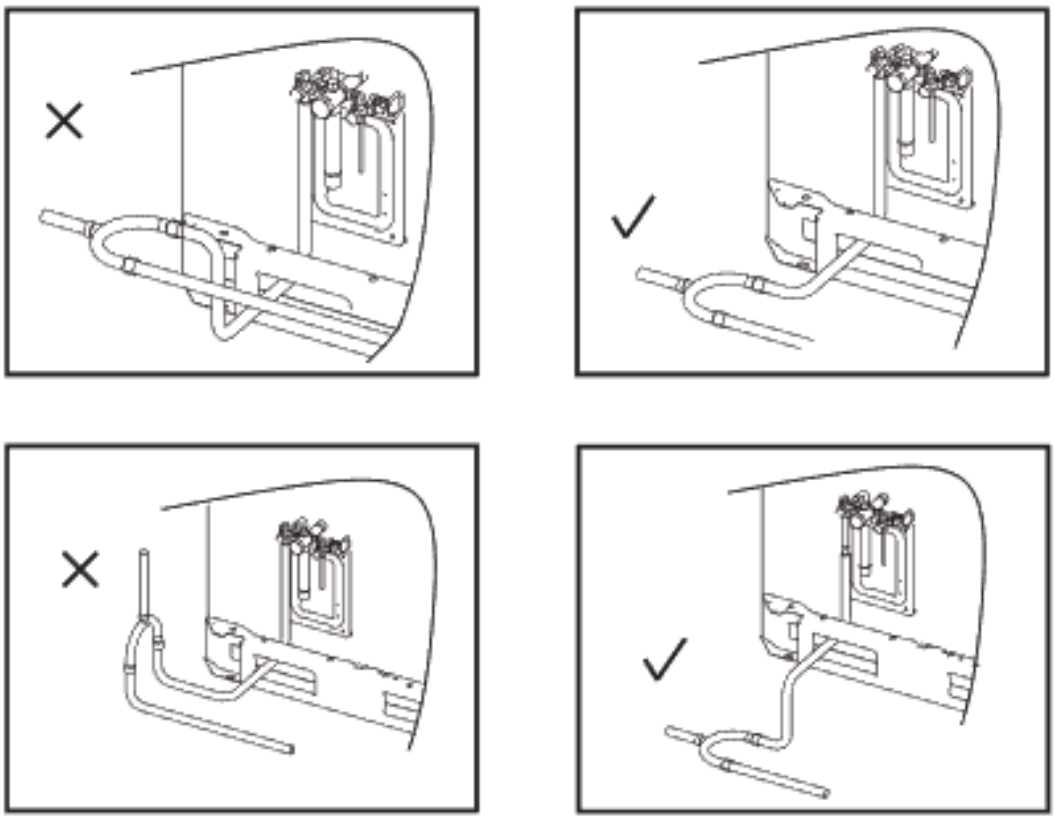

Fig. 30 —Correct Branch Joint Installation

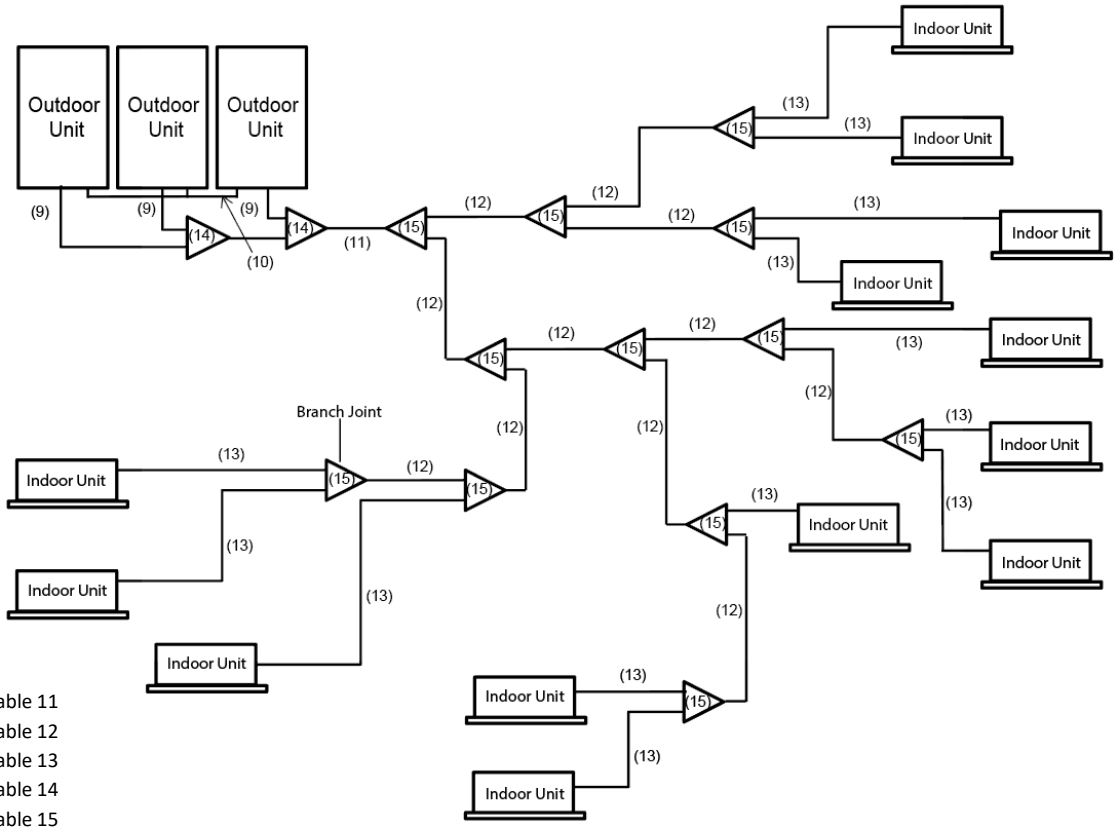

LEGEND

9 — See Table 11
10 — See Table 12
11 — See Table 13
12 — See Table 14
13 — See Table 15
14 — See Table 16
15 — See Table 17

Fig. 31 —Typical Refrigerant Piping Layout

Table 11 — Outdoor Unit Connecting Pipe

38VMH UNIT SIZE	GAS SIDE (in.)	LIQUID SIDE (in.)
072	7/8	1/2
096	7/8	1/2
120	1-1/8	5/8
144	1-1/8	5/8

Table 12 — Oil Balancing Pipe Between Outdoor Unit

OUTDOOR UNIT CAPACITY (kBtu/h)	BALANCING PIPE (in.)
168 and above	1/4

Table 13 — Main Pipe Selection

OUTDOOR UNIT CAPACITY (kBtu/h)	SIZE OF THE MAIN PIPE WHEN THE EQUIVALENT LENGTH OF LIQUID PIPE IS < 295 FT			SIZE OF THE MAIN PIPE WHEN THE EQUIVALENT LENGTH OF LIQUID PIPE IS > 295 FT		
	Gas Side (in.)	Liquid Side (in.)	First Branch Joint	Gas Side (in.)	Liquid Side (in.)	First Branch Joint
72	7/8	3/8	40VM900032	7/8	1/2	40VM900032
96	7/8	3/8	40VM900032	1-1/8	1/2	40VM900033
120~144	1-1/8	1/2	40VM900033	1-1/8	5/8	40VM900033
168~240	1-1/8	5/8	40VM900033	1-3/8	3/4	40VM900034
264~312	1-3/8	3/4	40VM900033	1-3/8	7/8	40VM900034
336~432	1-3/8	3/4	40VM900034	1-5/8	7/8	40VM900035

Table 14 — Branch Piping for Indoor Units

TOTAL CAPACITY CODE OF INDOOR UNIT AT DOWNSTREAM SIDE	INDOOR UNIT MAIN PIPE	
	Gas Side (in.)	Liquid Side (in.)
Below 56	5/8	3/8
56 to 78	3/4	3/8
78 to 112	7/8	3/8
112 to 156	1-1/8	1/2
156 to 224	1-1/8	5/8
224 to 314	1-3/8	3/4
314 to 460	1-5/8	3/4
460 and above	1-5/8	7/8

Table 15 — Indoor Unit Connection Pipe

INDOOR UNIT CAPACITY (kBtu/h)	PIPING LENGTH			
	≤ 33 ft		> 33 ft	
	Gas Side (in.)	Liquid Side (in.)	Gas Side (in.)	Liquid Side (in.)
7 to 18	1/2	1/4	5/8	3/8
24 to 54	5/8	3/8	3/4	1/2
72	3/4	3/8	7/8	1/2
96	7/8	3/8	1-1/8	1/2

Table 16 — Outdoor Unit Connection Pipe

OUTDOOR UNIT CAPACITY (kBtu/h)	BRANCH JOINT
144 - 264	40VM900021
288 - 432	40VM900022

Table 17 — Branch Joints

TOTAL CAPACITY CODE OF INDOOR UNIT AT DOWNSTREAM SIDE (kBtu/h)	BRANCH JOINT
Below 56	40VM900031
56 to 78	40VM900031
78 to 112	40VM900032
112 to 156	40VM900033
156 to 224	40VM900033
224 to 314	40VM900034
314 to 460	40VM900035
460 and above	40VM900035

Table 18 — 4 Port Branch Header

TOTAL CAPACITY CODE OF INDOOR UNIT AT DOWNSTREAM SIDE (kBtu/h)	BRANCH HEADER
Below 78	40VM900025

NOTE: Maximum capacity for each port is 24k

Table 19 — Branch Joint

PART NO.	LOW-PRESSURE GAS SIDE JOINT (IN.)	LIQUID SIDE JOINTS (IN.)	HEAT INSULATION MATERIAL
40VM900021	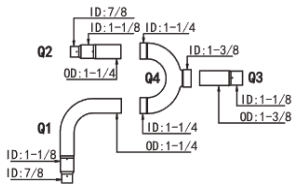	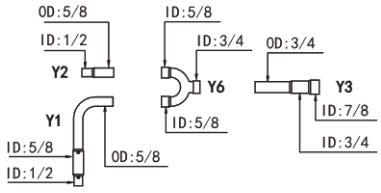	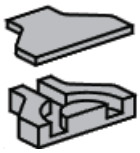 (2 sets)
40VM900022	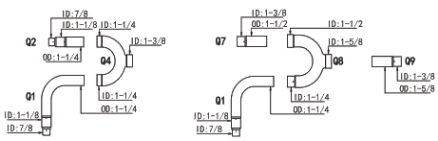	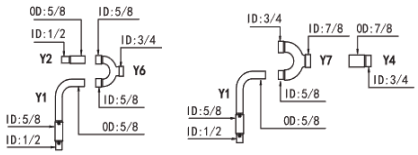	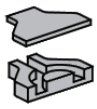 (4 sets)
40VM900031	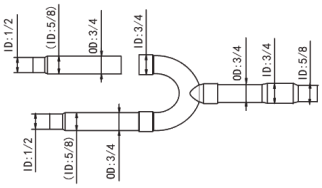	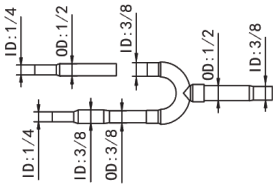	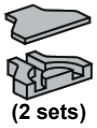 (2 sets)
40VM900032	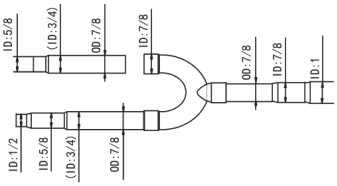	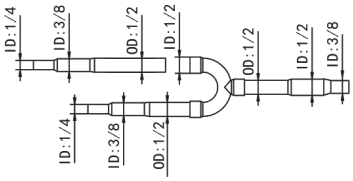	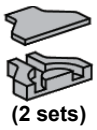 (2 sets)
40VM900033	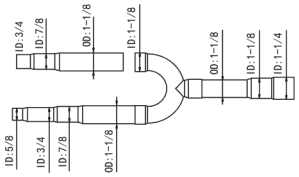	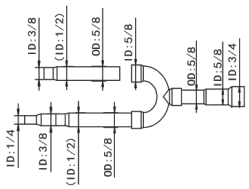	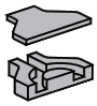 (2 sets)
40VM900034	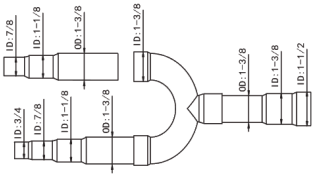	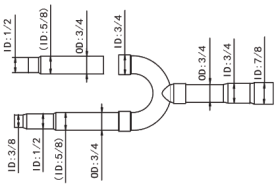	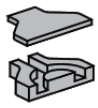 (2 sets)
40VM900035	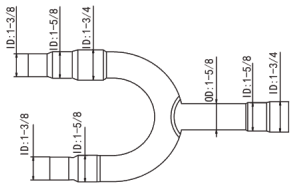	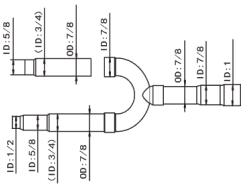	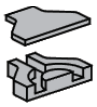 (2 sets)
40VM900025	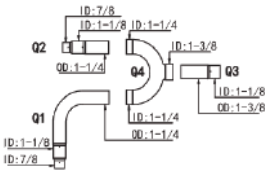	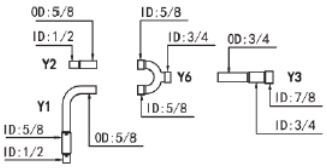	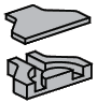 (2 sets)

Table 19 — 4 Port Branch Header

Part Number	Low Pressure Gas Side Joint	Liquid Side Joint
40VM900025	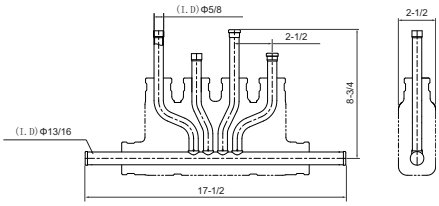	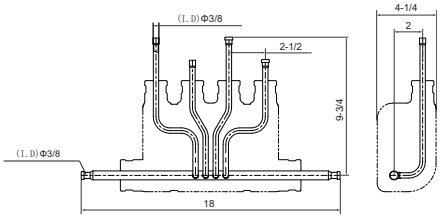

Step 4 — Pressure and Vacuum Test

System — After completing the refrigerant piping, perform the following pressure test:

1. Connect nitrogen canister to the system through the high-pressure gas side valve from the meter connector.
2. Apply nitrogen pressure gradually to 540 psig.
3. If the pressure decreases rapidly, locate and repair the leak, and pressurize the system again.
4. Repeat Steps 1-3 until the system remains at 540 psig for 24 hours.

After completing the pressure test, perform the following vacuum test:

1. Relieve the system of the nitrogen gas.
2. Connect a vacuum pump capable of achieving 500 microns or lower absolute pressure.
3. Vacuum the system to 500 microns or lower, and check for rapid pressure change.
4. Repeat Steps 1-3 until the system remains at 500 microns or lower for one hour.

When finished, replace the vacuum pump with the R-410A refrigeration canister.

Step 5 — Adjust Refrigerant Charge — Calculate the amount of refrigerant to add using Table 20 and Fig. 32. The refrigerant is R-410A.

NOTE: Assume equivalent pipe length of the branch joint to be 1.6 feet (for calculation purposes).

Table 20 — Refrigerant to Add Using Liquid Pipe Size

PIPE SIZE ON LIQUID SIDE (in.)	REFRIGERANT TO BE ADDED PER FOOT (lb/ft)
1/4	0.015
3/8	0.040
1/2	0.080
5/8	0.120
3/4	0.181
7/8	0.255

$$R = \left(\begin{array}{l} \left(\text{Total length (ft) of liquid piping size at ø 7/8 in.}\right) \times 0.255 + \left(\text{Total length (ft) of liquid piping size at ø 3/4 in.}\right) \times 0.181 + \\ \left(\text{Total length (ft) of liquid piping size at ø 5/8 in.}\right) \times 0.120 + \left(\text{Total length (ft) of liquid piping size at ø 1/2 in.}\right) \times 0.080 + \\ \left(\text{Total length (ft) of liquid piping size at ø 3/8 in.}\right) \times 0.040 + \left(\text{Total length (ft) of liquid piping size at ø 1/4 in.}\right) \times 0.015 \end{array} \right)$$

Fig. 32 —Calculating Amount of Refrigerant to Add

All service valves on the outdoor units should remain fully closed.

R-410A refrigerant should be added (in liquid state) at the liquid line service port on the header unit.

If the total calculated amount of refrigerant can be added to the system, the charging process is finished.

If the total calculated amount of refrigerant cannot be added to the system, close the valve on the refrigerant bottle, and move the charging house from the liquid line service port to the suction line service port.

Open the suction and liquid service valves on the header unit, and start the system in cooling mode.

Slowly open the valve on the refrigerant bottle, and carefully release liquid refrigerant into the suction service port.

If the total calculated charge amount is added completely to the system, the charging process is finished.

Step 6 — Complete Electrical Connections

⚠ WARNING

Electrical shock can cause personal injury and death. Disconnect the power supply before making wiring connections. There may be more than one disconnect switch. Tag all disconnect locations to alert others not to restore power until work is completed.

⚠ WARNING

All units must be wired strictly in accordance with the wiring diagram furnished with the unit. Any wiring different from the wiring diagram could result in personal injury and property damage.

⚠ CAUTION

Any original factory wiring that requires replacement must be replaced with wiring material having a temperature rating of at least 105°C.

Ensure supply voltage to the unit, as indicated on the serial plate, is not more than 10% over the rated voltage or 10% under the rated voltage.

Failure to follow these recommendations may result in equipment damage.

POWER SUPPLY — Electrical characteristics of the available power supply must agree with the unit nameplate rating. Circuit breaker size and supply voltage must be as shown in Table 19.

⚠ WARNING

Operating unit on improper supply voltage or with excessive phase imbalance may result in equipment damage and can affect the manufacturer's warranty.

Table 21 — 38VMH Electrical Data

SUPPLY VOLTAGE POWER SUPPLY (V-Ph-Hz)	38VMH UNIT SIZE	POWER SUPPLY	
		MCA*	MOPD
208/230-3-60	072	45	50
	096	46	50
	120	46	50
	144	70	80
460-3-60	072	22	30
	096	25	30
	120	25	30
	144	33	40

LEGEND
MCA — Minimum Circuit Amps
MOPD — Maximum Overcurrent Protective Device

* Select wire size based on larger value of MCA.

OPENING AND CLOSING THE ELECTRICAL COMPONENT BOX — Open and close electric control box cover as shown below. Do not apply excessive force to cover.

Use a screwdriver to unscrew the screw a short distance, but do not remove the screw. See Fig. 33.

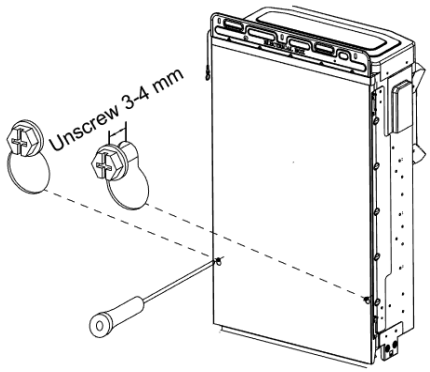

Fig. 33 —Removing Screws From the Panel

While holding the cover plate from the bottom, lift it slightly so that the screws clear their keyholes, and then tilt it outwards and remove as shown in Fig. 34 and 35.

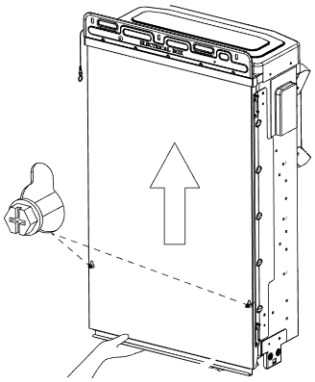

Fig. 34 —Lift the Cover Plate Up

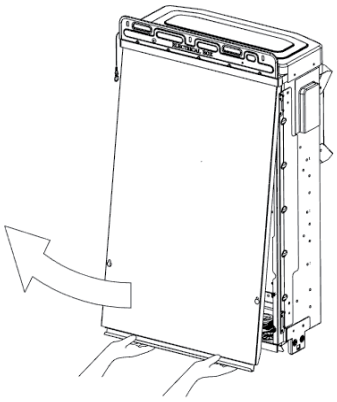

Fig. 35 —Remove the Cover Plate

POWER WIRING — Installation of wiring must conform with local codes and with NEC ANSI/NFPA 70, current editions. Units must be electrically grounded in conformance with the code. In Canada, wiring must comply with CSA C22.1, Electrical Code.

Figure 36 shows the location of the outdoor units power terminal block.

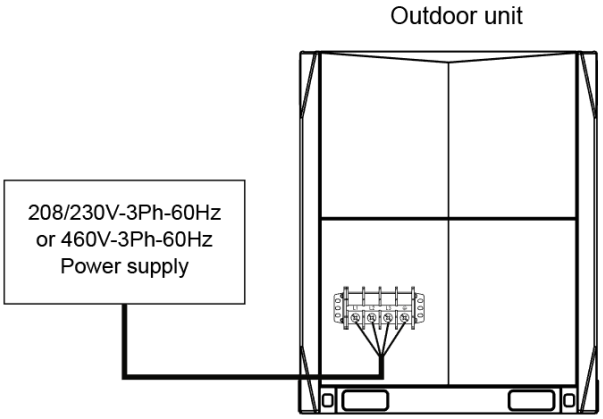

Fig. 36 —Outdoor Unit Power Terminal Block

After selecting the power wire, strip a suitable length of insulation, and attach the ring terminal using the proper crimping tool. Use the ring terminals provided to connect the power wiring as shown in Fig. 37.

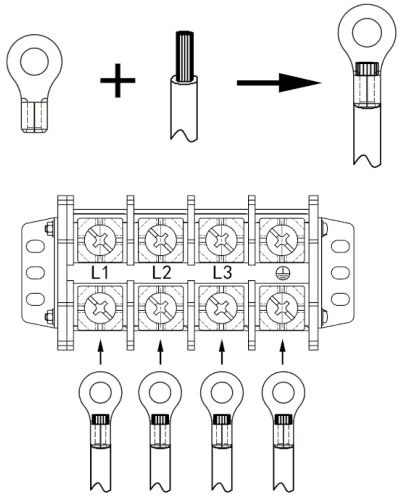

Fig. 37 —Stripping and Attaching the Power Wire

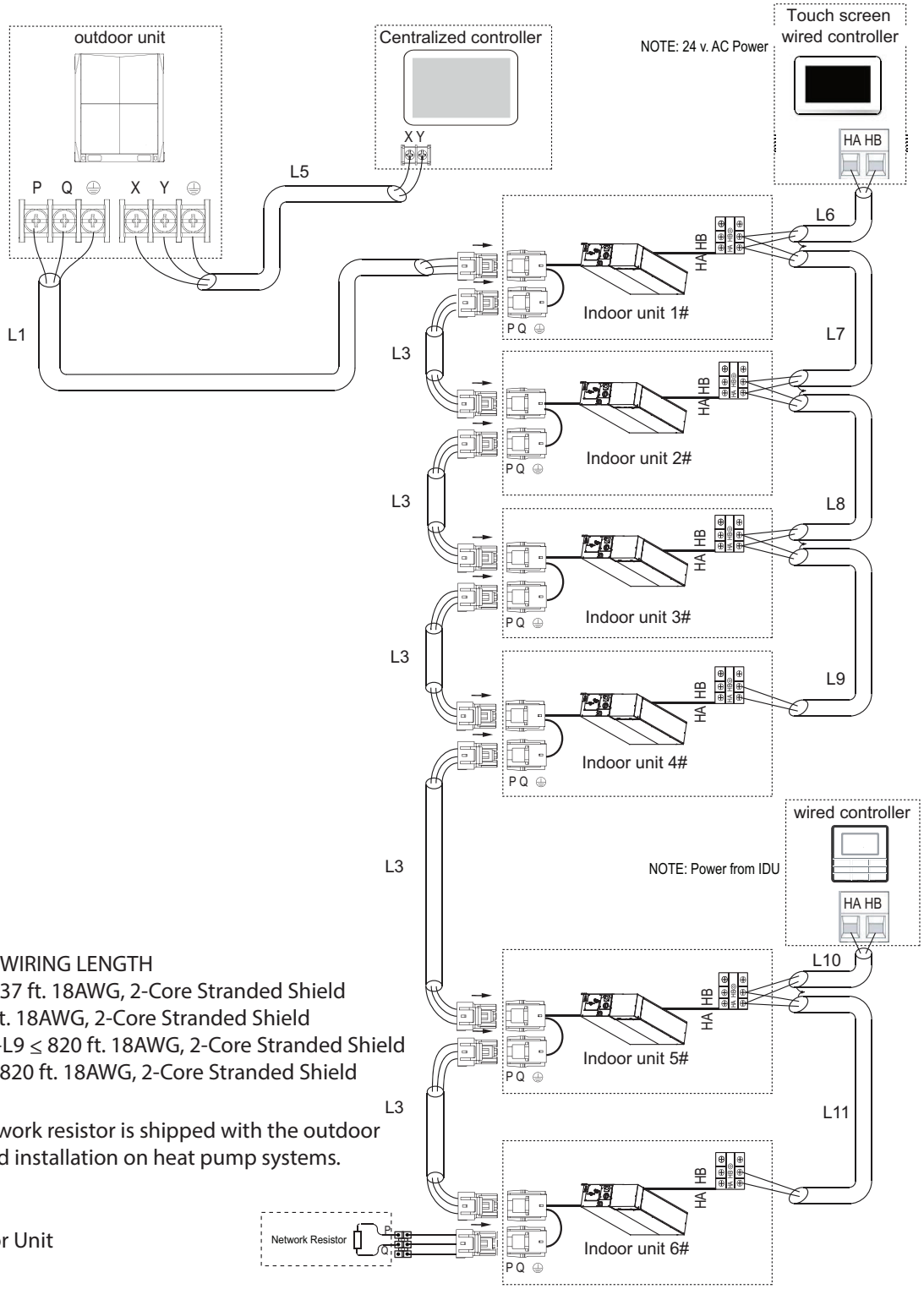

MAXIMUM WIRING LENGTH
L1+L3 ≤ 3937 ft. 18AWG, 2-Core Stranded Shield
L5 ≤ 3937 ft. 18AWG, 2-Core Stranded Shield
L6+L7+L8+L9 ≤ 820 ft. 18AWG, 2-Core Stranded Shield
L10+L11 ≤ 820 ft. 18AWG, 2-Core Stranded Shield

NOTE: Network resistor is shipped with the outdoor unit for field installation on heat pump systems.

LEGEND:
IDU - Indoor Unit

Fig. 38 —Outdoor Unit Communication Port Diagram

Network Communication Wiring for Combination of Touch Screen Central Controller and BACnet

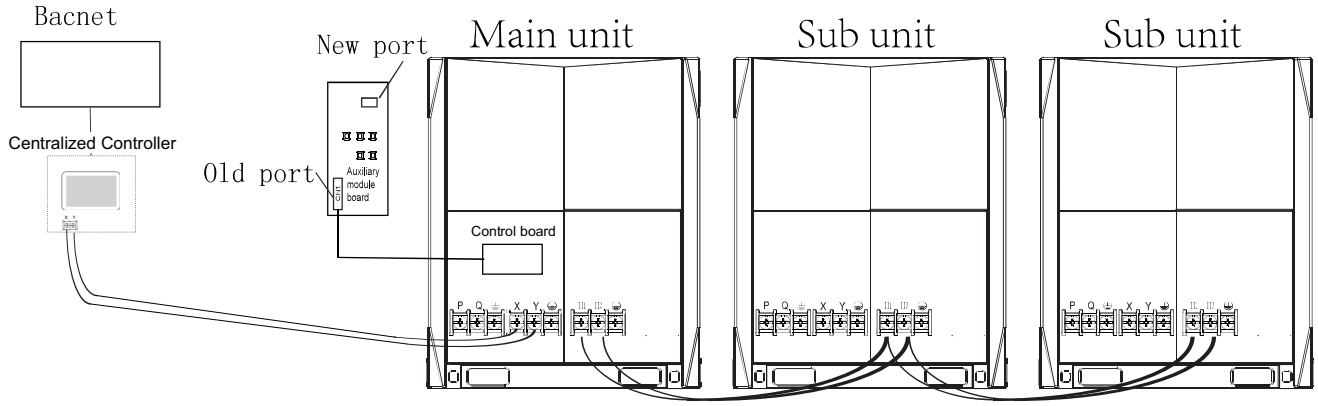

Fig. 39 —Wiring for Touch Screen Central Controller and BACnet (3 Units)

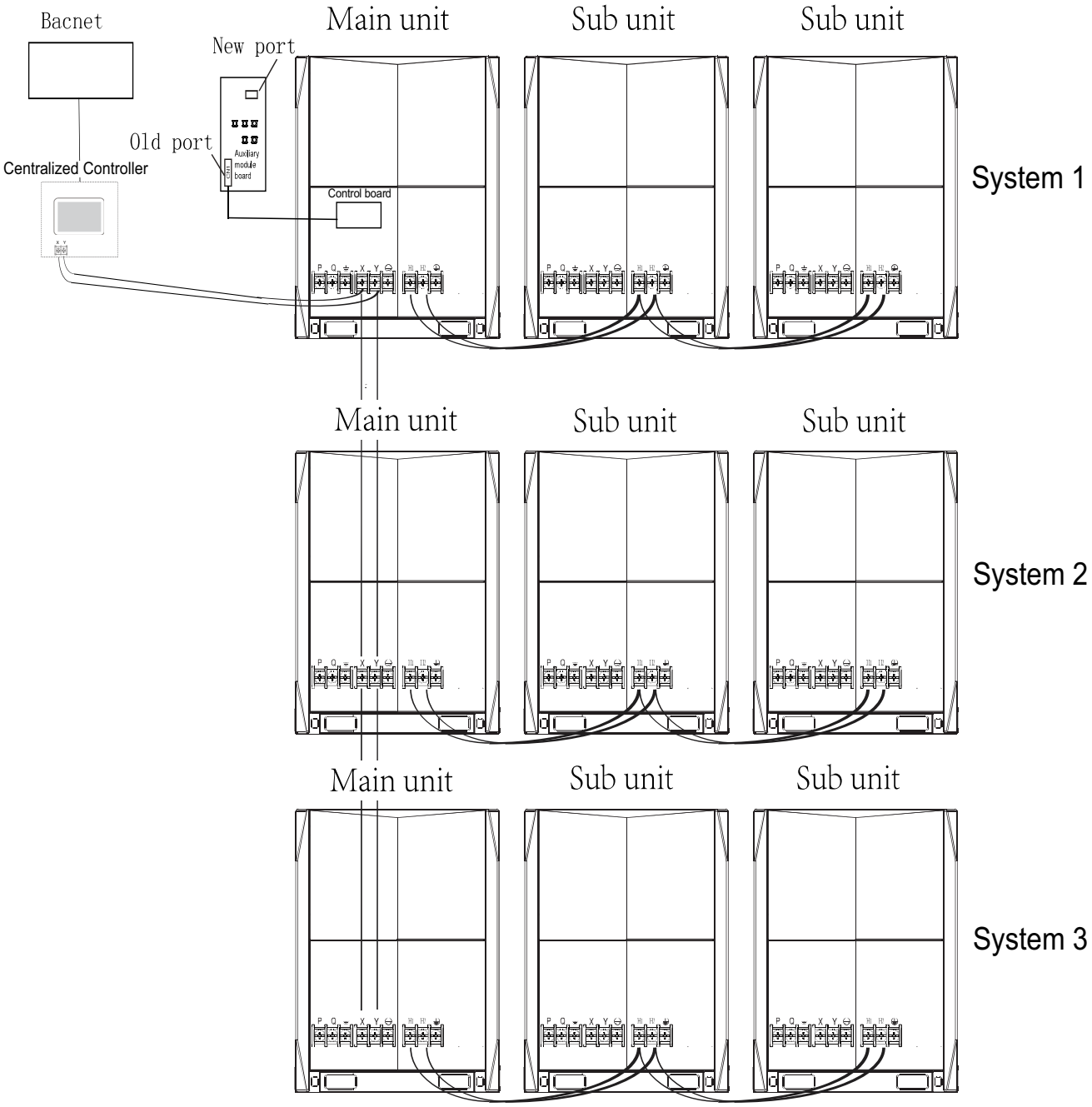

Fig. 40 —Wiring for Touch Screen Central Controller and BACnet (Multiple System)

For jobs where both touch screen central controller and BACnet are required, the network communication wiring should be as shown in Figures 36 and 37. Figure 36 shows a single system with multiple module setup along with touch screen central controller and BACnet. Figure 37 shows multiple refrigerant system with multiple module setup along with touch screen central control and BACnet. Both of these scenarios require a new check box with an additional XYE connection.

Follow the guidelines below when combining a touch screen central controller and BACnet:

- BACnet only: set BACnet to Polling mode.
- BACnet + TSCC: set BACnet to Listen Only mode.
- TSCC + BACnet and STT cannot be used at same time. Only 1 “Polling” control can be used at a time.
  - STT is a Polling control
  - TSCC is a Polling control
  - BACnet is either a Polling control or a Listen Only control

Refer to Fig. 41 for how to change the mode of each interface’s X/Y/E buses. For additional details, refer to the BACnet Interface IOM.

CONTROLLER CONFIGURATION — In the dropdown menus, you can select the mode of each of the four X/Y/E buses. Buses can be set to Polling Mode, Listening Mode, or Idle. Click “Apply” after making desired changes.

Fig. 41 —Configuring the Controller

COMMUNICATION WIRING — Communication wire must be wired as shown in Fig. 42. Do not route communication wire with high voltage power wire or allow it to come in contact with non-insulated piping and sharp edges.

> IMPORTANT: Wiring for communication shall be 2 inches or more apart from power source wiring to avoid electric noise. Do not insert control/communication and power source wire in the same conduit.
>
> Pay attention to the polarity of communication wire.

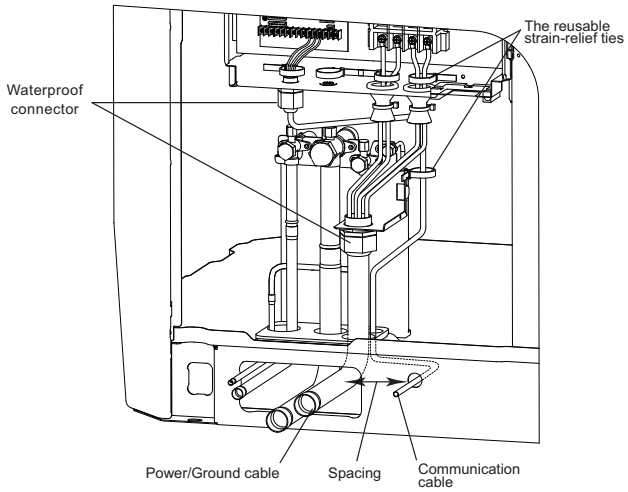

Fig. 42 —Wire Arrangement and Fixing the Control Wires

OPTION/EXTENSIONS OF COMMUNICATION WIRING — To extend control wiring or make terminal connections, use the PQE connection wire supplied in the accessory kit and follow the steps below.

1. Cut the connector on the outdoor unit side as shown in Fig 43.

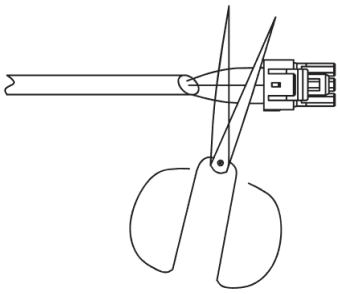

Fig. 43 —Shearing Outdoor Connector

2. Strip a suitable length of the insulation layer as shown in Fig. 44.

Fig. 44 —Stripping The Wire

3. Use a suitable screwdriver to fix the communication wire on the outdoor unit communication terminal as shown in Fig. 45.

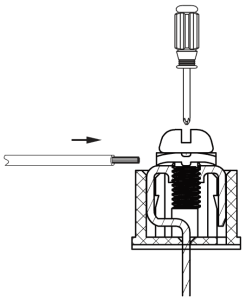

Fig. 45 —Connecting Communication Wire To Outdoor Unit Communication Terminal

For communication wires connecting to indoor units, find the corresponding port and plug it directly as shown in Fig. 46.

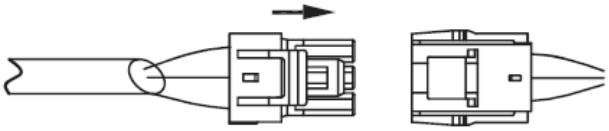

Fig. 46 —Connecting The Communication Wires

If it is not possible to buy communication wires from Carrier, connect the indoor unit side of communication wires using the connector provided with the accessories as shown in Fig. 47.

> **⚠ CAUTION**
>
> NEVER CONNECT the main power source to the control or communication terminal block.
>
> USE AN APPROPRIATE SCREWDRIVER for tightening the terminal screws. Do not over tighten the terminal screws.
>
> Failure to follow these procedures may result in personal injury or damage to equipment.

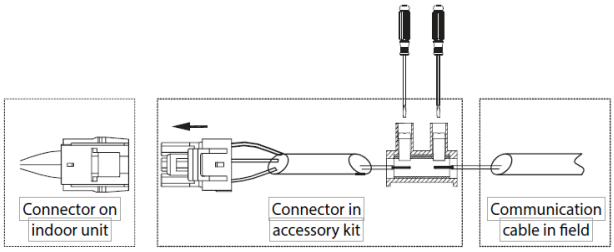

Fig. 47 —Connecting the Communication Cable from Indoor Unit to Outdoor Unit using the Supplied Connector

START-UP

Trial Run

Set a different address for each indoor unit. The addresses can range from 0 to 63. The address can be set randomly using the "Automatic Search Address" function or set the addresses manually using the wireless remote or wired controller.

Select and assign an indoor unit as 63. This unit will be in "priority mode" and will control whether the system is in heating or cooling.

Set the total number of indoor units on the main board

Fig. 48 below shows the arrangement of the power wires.

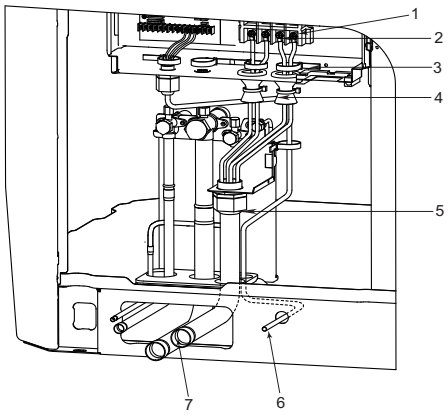

LEGEND

1 — Main Power Terminal
2 — Ring Terminal
3 — Reusable Strain-Relief Wire Ties
4 — Ribbon
5 — Waterproof Connector
6 — Communication Cable
7 — Power/Ground Cable

Fig. 48 —Outdoor Unit Power Wiring Arrangement

WIRING THE COMMUNICATION TERMINAL BLOCK — Figure 49 is the communication port diagram for the outdoor unit.

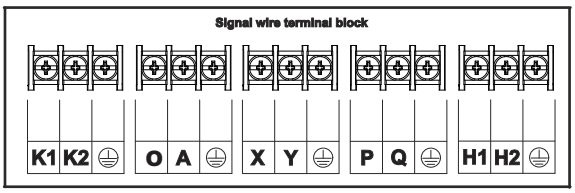

LEGEND

K1, K2		Reserved
O, A	⏚	To kWh meter
X, Y	⏚	To centralized controller
P, Q	⏚	To indoor units communication bus
H1, H2	⏚	To outdoor units communication bus

Fig. 49 —Outdoor Unit Communication Port Diagram

COMMUNICATION CABLE — The type of communication cable used is a 2-core stranded shielded cable. The diameter of the wire should be AWG 18. The maximum wire length should be within 3,937 feet between outdoor and indoor units and within 820 feet between the wired controller and indoor units. Communication wires are sold separately but can be obtained through Carrier. Figure 50 shows a typical communication wire from Carrier.

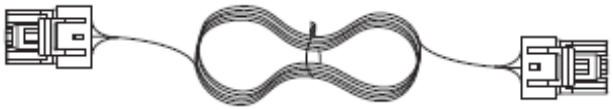

Fig. 50 —Typical Communication Wire

For typical communication wiring layout see Fig. 38.

Unit Settings

Symbol	Switch	Status	Function	Remark
S5	ON 1 2 3	000	Auto mode (Default)	
		001	Cooling priority mode	
		010	Indoor unit priority mode (IUD #63) or majority mode	
		011	Heating mode only	
		100	Cooling mode only	
S6	ON 1 2	00	Automatic search address (Default)	
		01	Manual search address	
		10	Clear indoor units address	
ENC1		0	Header unit	Outdoor unit address dial switch
		1	Follower unit	
		2	Follower unit	
ENC2		0-3	Reserved	
ENC4		0~7	Network address setting 0~7	
ENC3 + S12		0~F	Setting the number of indoor units 0~15	
	ON 1 2 3	000		
		0~F	Setting the number of indoor units 16~31	
	ON 1 2 3	001		
		0~F	Setting the number of indoor units 32~47	
	ON 1 2 3	010		
		0~F	Setting the number of indoor units 48~63	
	ON 1 2 3	011		
		0	Setting the number of indoor units 64	
	ON 1 2 3	100		

MAINTENANCE

⚠ CAUTION

When servicing or repairing this unit, use only factory-approved service replacement parts. Refer to the rating plate on the unit for complete unit model number, serial number, and company address. Any substitution of parts or controls not approved by the factory will be at the owner's risk and may result in equipment damage.

⚠ CAUTION

To avoid equipment damage, do not attempt to reuse any mechanical or electrical controllers that have been wet. Replace defective controller.

The following are recommended guidelines. Jobsite conditions may dictate that the maintenance schedule be performed more often than recommended here.

EVERY 3 MONTHS:

- Check coil condition. Clean the coil if necessary.

EVERY 6 MONTHS:

Follow 3-month maintenance schedule. In addition:

- Check for and remove debris that may have settled around the base of the outdoor unit.
- Check for proper condensate drainage (clear basepan).
- Eliminate any standing water inside the outdoor unit.

EVERY 12 MONTHS:

Follow 6-month maintenance schedule. In addition:

- Be sure all electrical connections are secure.
- Check the heating and cooling action to confirm proper operation.

Advanced Settings

- Hold the “MENU (SW4)” button down for five seconds to enter the menu.
- Press “UP(SW5) / DOWN(SW6)” button to select and set the item. When the number is chosen, the number will flash. Press “OK(SW3)” to confirm and set the next number. Use Table 22 as a reference.
- Hold “OK (SW3)” again to exit the main menu.

Table 22 — List of Menu Functions

SYMBOL	FUNCTION	ITEM	DESCRIPTION
_n1_	Special function for debugging	_n12	Forced cooling (62.6°F of IDU)
		_n13	Forced heating (86°F of IDU)
		_n14	Cooling test
		_n15	Heating Test
_n2_	Refrigerant recycle function	_n21	Refrigerant recycled to outdoor units
		_n22	Refrigerant recycled to indoor units
		_n23	Refrigerant recycled to piping
		_n26	Maintenance operation
_n3_	Malfunction query	_n31	Historical malfunction query
		_n32	Clear the historical malfunction
_n4_	Night time setting	_n41	6/10H (default)
		_n42	6/12H
		_n43	8/10H
		_n44	8/12H
_n5_	Silent mode setting	_n51	Night silent mode
		_n52	Silent mode
		_n53	Super silent mode
		_n54	Silent mode off (default)
_n8_	Static pressure mode setting	_n81	Standard static pressure mode (default)
		_n82	Low static pressure mode (reserved)
		_n83	Medium static pressure mode (reserved)
		_n84	High static pressure mode (reserved)
_nb_	Temperature unit setting	_nb1	Temperature unit (Celsius)
		_nb2	Temperature unit (Fahrenheit)
_nC_	T4 sensor (outdoor temperature) threshold to enable Aux Heat. Aux heat will enable when outdoor temperature falls 1.8°F below this temperature.	_nC1	Auxiliary heat disabled
		_nC2	5°F
		_nC3	15°F
		_nC4	25°F
		_nC5	35°F
		_nC6	45°F
		_nC7	55°F
		_nC8	65°F

Snow-Blowing Function

1. Press SW5 button on spot check box of the header outdoor unit to enter the snow-blowing function. It will display “Sn0” for 15 seconds.
2. Press SW5 button again to exit the snow-blowing function. It will display “Sn1” for 15 seconds.

The snow-blowing modes can be selected through S11 dip switch on spot check box as shown in Fig. 51.

Mode	Heavy Snow Mode	Light Snow Mode
S11		

Fig. 51 —S11 - Snow-Blowing Modes

If the unit receives a startup signal, it will exit the snow-blowing function.

Pre-Start Check

- Check that the refrigerant pipe line and communication wire with indoor and outdoor unit have been connected to the same refrigeration system.
- Outdoor units require either 208/230-3-60 or 460-3-60 power. Verify that the power and phase requirements are correct and all three legs are present.
- Check that power source’s voltage is within 10% of the rated voltage.
- Check and confirm that the power and control wire are correctly connected.
- Check that the wired controllers are properly connected.
- Before powering on, confirm there is no short circuit for each line.
- Check that all units have passed a nitrogen pressure test for 24 hours.
- Provide the customer accurate “as-built” drawings and documents, including actual piping lengths and locations, unit addresses, settings, etc.
- Ensure additional refrigerant charge calculations are correct and that the system is charged accordingly. Energize outdoor units for at least 24 hours before startup to ensure proper oil temperature.
- Ensure all refrigerant valves on outdoor units are fully open. Ensure oil balancing valves are open for 2 and 3-module systems. If these valves are not fully open, equipment damage may occur.

© Carrier Corporation 2020