38VMR072-336
Outdoor Unit for
Variable Refrigerant Flow (VRF) Heat Recovery Systems

Installation and Maintenance Instructions

CONTENTS

Page

SAFETY CONSIDERATIONS 1,2
GENERAL 2
INSTALLATION 11
Step 1 — Unpack and Inspect Units 11
- PROTECTING UNITS FROM DAMAGE
- PREPARING JOB SITE FOR UNIT INSTALLATION
- IDENTIFYING AND PREPARING UNITS

Step 2 — Position the Unit 12
- HANDLING THE UNIT
- CONCRETE BASE REQUIREMENTS
- SPACE REQUIRED FOR INSTALLATION AND MAINTENANCE
- SNOW GUARD INSTALLATION
- ACCESSING REFRIGERANT AND ELECTRICAL CONNECTIONS

Step 3 — Connect Refrigerant Piping 14
- REFRIGERANT PIPING CONNECTIONS
- REFRIGERATION PIPING MEASUREMENTS

Step 4 — Pressure and Vacuum Test System . . 18
Step 5 — Adjust Refrigerant Charge 18
Step 6 — Complete Electrical Connections 20
- POWER SUPPLY
- OPENING AND CLOSING THE ELECTRICAL COMPONENT BOX
- POWER WIRING
- WIRING THE COMMUNICATION TERMINAL BLOCK
- COMMUNICATION CABLE
- COMMUNICATION WIRING
- OPTION/EXTENSIONS OF COMMUNICATION WIRING

START-UP 24
Trial Run 24
Main Menu 24
Pre-Start Check 26
MAINTENANCE 26

SAFETY CONSIDERATIONS

Improper installation, adjustment, alteration, service, maintenance, or use can cause explosion, fire, electrical shock, or other conditions; which may cause death, personal injury or property damage. The qualified installer or agency must use factory-authorized kits or accessories when modifying this product.

Follow all safety codes. Wear safety glasses, protective clothing, and work gloves. Use quenching cloth for brazing operations. Have a fire extinguisher available. Read these instructions thoroughly and follow all warnings or cautions included in the literature and attached to the unit. Consult local building codes and the current editions of the National Electrical Code (NEC) ANSI/NFPA (American National Standards Institute/National Fire Protection Association) 70. In Canada, refer to the current editions of the Canadian Electrical Code CSA (Canadian Standards Association) C22.1.

Understand the signal words — **DANGER**, **WARNING**, and **CAUTION**. **DANGER** identifies the most serious hazards, which will result in severe personal injury or death. **WARNING** signifies hazards that could result in personal injury or death. **CAUTION** is used to identify unsafe practices, which would result in minor personal injury or product and property damage.

Recognize the safety information. This is the safety-alert symbol (⚠). When this symbol is displayed on the unit and in instructions or manuals, be alert to the potential for personal injury. Installing, starting up, and servicing equipment can be hazardous due to system pressure, electrical components, and equipment location.

⚠ WARNING

Electrical shock can cause personal injury and death. Shut off all power to this equipment during installation. There may be more than one disconnect switch. Tag all disconnect locations to alert others not to restore power until work is completed.

⚠ WARNING

When installing the equipment in a small space, provide adequate measures to avoid refrigerant concentration exceeding safety limits due to refrigerant leak. In case of refrigerant leak during installation, ventilate the space immediately. Failure to follow this procedure may lead to personal injury.

⚠ WARNING

DO NOT USE A TORCH to remove any component. The system contains oil and refrigerant under pressure.

To remove a component, wear protective gloves and goggles and proceed as follows:

a. Shut off electrical power to the unit.
b. Recover refrigerant to relieve all pressure from the system using both the high-pressure and low pressure ports.
c. Traces of vapor should be displaced with nitrogen and the work area should be well ventilated. Refrigerant in contact with an open flame produces toxic gases.
d. Cut the component connection tubing with a tubing cutter and remove component from the unit. Use a pan to catch any oil that may come out of the lines and as a gage for how much oil to add to the system.
e. Carefully unsweat the remaining tubing stubs when necessary. Oil can ignite when exposed to a torch flame.

Failure to follow these procedures may result in personal injury or death.

Manufacturer reserves the right to discontinue, or change at any time, specifications or designs without notice and without incurring obligations.

⚠ CAUTION

DO NOT re-use compressor oil or any oil that has been exposed to the atmosphere. Dispose of oil per local codes and regulations. DO NOT leave refrigerant system open to air any longer than the actual time required to service the equipment. Seal circuits being serviced and charge with dry nitrogen to prevent oil contamination when timely repairs cannot be completed. Failure to follow these procedures may result in damage to equipment.

GENERAL

The VRF (variable refrigerant flow) heat recovery system offers a variety of indoor unit types and sizes, ranging from 0.5 to 8 tons. The 38VMA heat recovery outdoor units are available in two different cabinet sizes. The system has the capability to operate between 50% and 150% connected capacity, allowing the system to be tailored to the needs of the customer and the application.

The equipment is initially protected under the manufacturer's standard warranty; however, the warranty is provided under the condition that the steps outlined in this manual for initial inspection, proper installation, regular periodic maintenance, and everyday operation of the unit be followed in detail. This manual should be fully reviewed in advance before initial installation, start-up, and any maintenance. Contact your local sales representative or the factory with any questions BEFORE proceeding.

See Fig. 1 for model number nomenclature. Table 1 shows components that may or may not be used for a particular installation. Tables 2−7 lists physical data for each unit size. Figs. -4 shows the unit's dimensions.

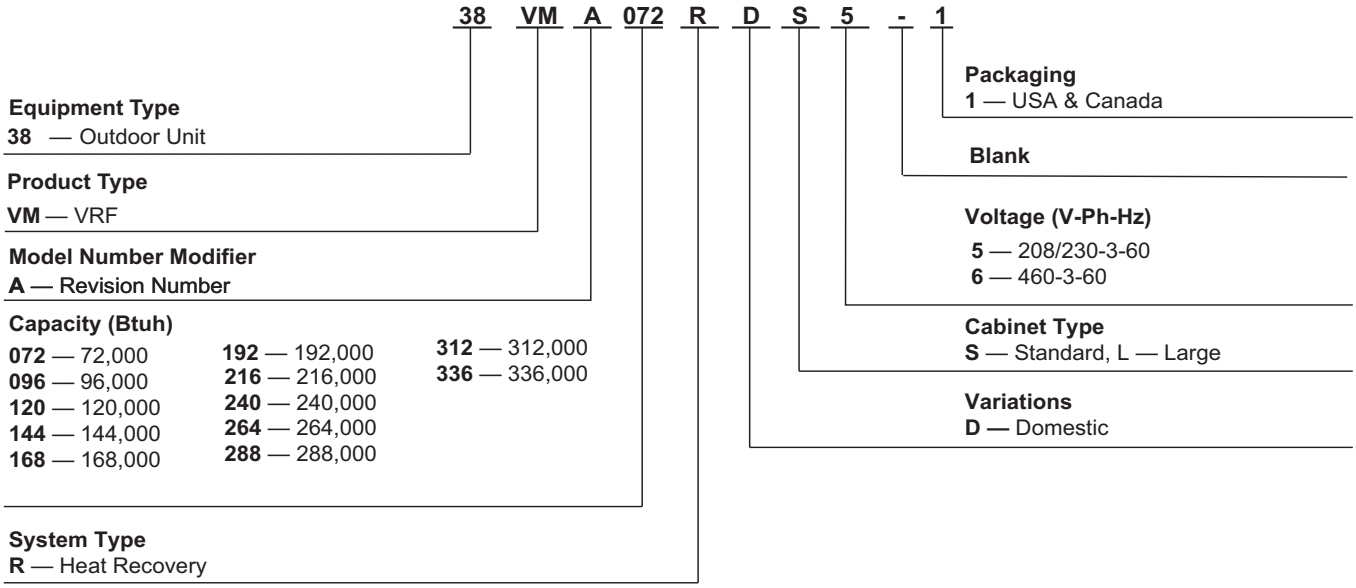

Fig. 1 — Model Number Nomenclature

Table 1 — Components Shipped with Unit

NAME	SHAPE	QUANTITY	FUNCTION
Seal plug		8	For maintenance
Simple wrench		1	For removing the side plate screws
90 degree elbow		2 (Sizes 072 to 120 only)	For outdoor unit and refrigerant pipe connection
Connective pipe accessories		2 (Sizes 144 to 240 only)	For outdoor unit and refrigerant pipe connection
		2	For outdoor unit and refrigerant pipe connection
		2 (Sizes 144 to 240 only)	For MDC and refrigerant pipe connection
		1 (Sizes 240 to 336 only)	For MDC and refrigerant pipe connection
		(Sizes 240 to 336 only)	Pressure testing pipes (see Fig. 3)
		(Sizes 240 to 336 only)	Pressure testing pipes (see Fig. 3)
		(Sizes 240 to 336 only)	Pressure testing pipes (see Fig. 3)
Ring terminal		4	For connecting the power and grounding cables
Screw Bag		1	For pressure test valve (see Fig 2)

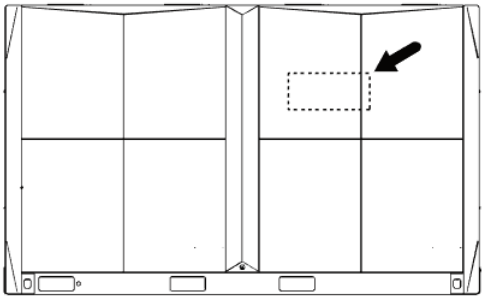

Fig. 2

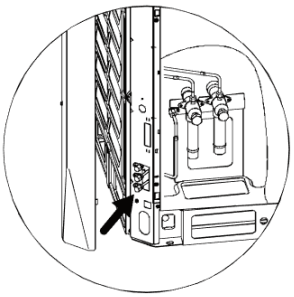

Fig. 3

Table 2 — 38VMAR Physical Data

UNIT		072	096	120
NOMINAL TONS (Ton)		6	8	10
POWER SUPPLY (V-Ph-Hz)*		208/230-3-60		
COOLING CAPACITY WITH NON-DUCTED and DUCTED INDOOR UNITS†				
Nominal (kBtu/h)		72	96	120
Rated (kBtu/h)		69	92	114
HEATING CAPACITY WITH NON-DUCTED and DUCTED INDOOR UNITS†				
Nominal (kBtu/h)		80	108	126
Rated (kBtu/h)		77	103	120
ELECTRICAL CHARACTERISTICS WITH NON-DUCTED INDOOR UNITS				
Cooling	Power Consumption (kW)	4.2	6.2	9.3
	IEER (Btu/W)	24.6	23.7	22.8
Heating	Power Consumption (kW)	4.4	7.2	9.5
	COP (W/W)	4.37	3.82	3.45
SCHE (Simultaneous Cooling & Heating Efficiency)		30.0	30.0	30.0
ELECTRICAL CHARACTERISTICS WITH DUCTED INDOOR UNITS				
Cooling	Power Consumption (kW)	5.0	7.1	9.5
	IEER (Btu/W)	24.2	24.3	23.2
Heating	Power Consumption (kW)	5.7	8.0	9.8
	COP (W/W)	3.85	3.63	3.45
SCHE (Simultaneous Cooling & Heating Efficiency)		27.40	27.70	26.70
UNIT DIMENSIONS (W x H x D) (in.)		52-3/4 x 64-3/8 x 31-1/8		
UNIT NET WEIGHT (lb)		672		
COMPRESSOR				
Type		INVERTER-driven Scroll Hermetic		
Motor Output (kW)		23.25		
FAN UNIT				
Air Volume (cfm)		6900	7600	8100
Motor Output (W)		180+180	210+210	250+250
REFRIGERANT SHIPPING CHARGE (lb)††		26.5		
REFRIGERANT CONNECTING PORT DIAMETER				
Gas Side (in.)		3/4	7/8	1-1/8
Liquid Side (in.)		5/8	3/4	
OPERATION TEMPERATURE RANGE				
Cooling (F db)		5~125		
Heating (F wb)		-13~64		
MAX ESP (in. wg)		0.24 Max.		
MAX NUMBER OF CONNECTED INDOOR UNITS		15	20	24
MAXIMUM CAPACITY OF COMBINED INDOOR UNITS		50% to 150%		
SOUND PRESSURE LEVEL (db(A)†††		58.4	61.7	62.7

LEGEND

COP — Coefficient of Performance
db — Dry Bulb
IEER — Integrated Energy Efficiency Ratio
ESP — External Static Pressure
wb — Wet Bulb

*The source of voltage must not fluctuate more than ± 10%.
†Rated conditions:
Cooling: Indoor air temperature 80 F dry bulb / 67 F wet bulb, Outdoor air temperature 95 F dry bulb.
Heating: Indoor air temperature 70 F dry bulb, Outdoor air temperature 47 F dry bulb / 43 F wet bulb.
†† The amount does not consider extra piping length. Refrigerant must be added on site in accordance with the actual piping length.
†††These values, measured in anechoic chamber, at a point 1 m in front of the unit at a height of 1.4 m.
During actual operation, these values are normally somewhat higher as a result of ambient conditions.

Table 3 — 38VMAR Physical Data

UNIT			144	168	192	216	240
NOMINAL TONS (Ton)			12	14	16	18	20
POWER SUPPLY (V-Ph-Hz)*			208/230-3-60				
COOLING CAPACITY WITH NON-DUCTED and DUCTED INDOOR UNITS†							
	Nominal (kBtu/h)		144	168	192	216	240
	Rated (kBtu/h)		136	158	182	204	220
HEATING CAPACITY WITH NON-DUCTED and DUCTED INDOOR UNITS†							
	Nominal (kBtu/h)		160	188	215	243	257
	Rated (kBtu/h)		150	180	204	222	236
ELECTRICAL CHARACTERISTICS WITH NON-DUCTED INDOOR UNITS							
	Cooling	Power Consumption (kW)	9.0	11.9	14.7	16.8	19.7
		IEER (Btu/W)	24.4	23.1	23.9	23.0	22.4
	Heating	Power Consumption (kW)	9.6	13.3	16.2	18.0	20.2
		COP (W/W)	3.98	3.59	3.38	3.34	3.20
	SCHE (Simultaneous Cooling & Heating Efficiency)		26.50	27.00	28.20	27.30	27.00
ELECTRICAL CHARACTERISTICS WITH DUCTED INDOOR UNITS							
	Cooling	Power Consumption (kW)	10.6	13.3	15.9	17.9	20.4
		IEER (Btu/W)	24.0	22.9	23.6	21.7	21.0
	Heating	Power Consumption (kW)	11.8	14.4	17.4	19.1	20.9
		COP (W/W)	3.60	3.54	3.33	3.29	3.20
	SCHE (Simultaneous Cooling & Heating Efficiency)		26.50	25.20	25.50	26.50	26.50
UNIT DIMENSIONS (W x H x D) (in.)			78-3/8 x 64-3/8 x 31-1/8				
UNIT NET WEIGHT (lb)			1137				
COMPRESSOR							
	Type		INVERTER-driven Scroll Hermetic				
	Motor Output (kW)		23.25				
FAN UNIT							
	Air Volume (cfm)		10,100	10,100	11,300	12,300	12,300
	Motor Output (W)		260+260	260+260	340+340	440+440	440+440
REFRIGERANT SHIPPING CHARGE (lb)††			44.2				
REFRIGERANT CONNECTING PORT DIAMETER							
	Gas Side (in.)		1-1/8				1-3/8
	Liquid Side (in.)		7/8			1-1/8	
OPERATION TEMPERATURE RANGE							
	Cooling (F db)		5~125				
	Heating (F wb)		-13~64				
MAX ESP (in. wg)			0.24 Max.				
MAX NUMBER OF CONNECTED INDOOR UNITS			29	34	39	44	49
MAXIMUM CAPACITY OF COMBINED INDOOR UNITS			50% to 150%				
SOUND PRESSURE LEVEL (db(A)†††			63.3	63.3	64.9	67.1	67.1

LEGEND

COP — Coefficient of Performance
db — Dry Bulb
IEER — Integrated Energy Efficiency Ratio
ESP — External Static Pressure
wb — Wet Bulb

*The source of voltage must not fluctuate more than ± 10%.
†Rated conditions:
Cooling: Indoor air temperature 80 F dry bulb / 67 F wet bulb, Outdoor air temperature 95 F dry bulb.
Heating: Indoor air temperature 70 F dry bulb, Outdoor air temperature 47 F dry bulb / 43 F wet bulb.
†† The amount does not consider extra piping length. Refrigerant must be added on site in accordance with the actual piping length.
†††These values, measured in anechoic chamber, at a point 1 m in front of the unit at a height of 1.4 m.
During actual operation, these values are normally somewhat higher as a result of ambient conditions.

Table 4 — 38VMAR Physical Data

UNIT			240	264	288	312	336
NOMINAL TONS (Ton)			20	22	24	26	28
POWER SUPPLY (V-Ph-Hz)*			208/230-3-60				
COOLING CAPACITY WITH NON-DUCTED and DUCTED INDOOR UNITS†							
	Nominal (kBtu/h)		240	264	288	312	336
	Rated (kBtu/h)		228	248	274	296	308
HEATING CAPACITY WITH NON-DUCTED and DUCTED INDOOR UNITS†							
	Nominal (kBtu/h)		270	295	323	343	353
	Rated (kBtu/h)		256	282	298	314	322
ELECTRICAL CHARACTERISTICS WITH NON-DUCTED INDOOR UNITS							
	Cooling	Power Consumption (kW)	20.36	23.18	26.35	31.83	33.12
		IEER (Btu/W)	22.4	22.0	21.0	20.2	19.5
	Heating	Power Consumption (kW)	20.22	23.48	25.84	28.85	29.58
		COP (W/W)	3.71	3.52	3.38	3.20	3.20
	SCHE (Simultaneous Cooling & Heating Efficiency)		30.00	29.6	29.3	28.5	28.0
ELECTRICAL CHARACTERISTICS WITH DUCTED INDOOR UNITS							
	Cooling	Power Consumption (kW)	20.73	23.18	27.96	31.16	33.12
		IEER (Btu/W)	21.1	21.0	20.5	19.8	19.0
	Heating	Power Consumption (kW)	21.02	23.68	25.54	27.39	29.22
		COP (W/W)	3.57	3.49	3.42	3.36	3.23
	SCHE (Simultaneous Cooling & Heating Efficiency)		28.0	27.5	27.0	26.5	25.5
UNIT DIMENSIONS (W x H x D) (in.)			105-7/8 x 64-3/8 x 31-1/8				
UNIT NET WEIGHT (lb)			1627				
COMPRESSOR							
	Type		INVERTER-driven Scroll Hermetic				
	Motor Output (kW)		23.25				
FAN UNIT							
	Air Volume (cfm)		14,500	15,500	15,500	16,500	16,500
	Motor Output (W)		225 x 4	265 x 4	265 x 4	310 x 4	310 x 4
REFRIGERANT SHIPPING CHARGE (lb)††			77.2				
REFRIGERANT CONNECTING PORT DIAMETER							
	Gas Side (in.)		1-3/8			1-5/8	
	Liquid Side (in.)		1-1/8			1-1/8	
OPERATION TEMPERATURE RANGE							
	Cooling (F db)		5~125				
	Heating (F wb)		-13~64				
MAX ESP (in. wg)			0.24 Max.				
MAX NUMBER OF CONNECTED INDOOR UNITS			49	54	59	64	64
MAXIMUM CAPACITY OF COMBINED INDOOR UNITS			50% to 150%				
SOUND PRESSURE LEVEL (db(A)†††			63.9	64.8	64.8	66.4	67.2

LEGEND

COP — Coefficient of Performance
db — Dry Bulb
IEER — Integrated Energy Efficiency Ratio
ESP — External Static Pressure
wb — Wet Bulb

*The source of voltage must not fluctuate more than ± 10%.
†Rated conditions:
Cooling: Indoor air temperature 80 F dry bulb / 67 F wet bulb, Outdoor air temperature 95 F dry bulb.
Heating: Indoor air temperature 70 F dry bulb, Outdoor air temperature 47 F dry bulb / 43 F wet bulb.
†† The amount does not consider extra piping length. Refrigerant must be added on site in accordance with the actual piping length.
†††These values, measured in anechoic chamber, at a point 1 m in front of the unit at a height of 1.4 m.
During actual operation, these values are normally somewhat higher as a result of ambient conditions.

Table 5 — 38VMAR Physical Data

UNIT			072	096	120
NOMINAL TONS (Ton)			6	8	10
POWER SUPPLY (V-Ph-Hz)*			460-3-60		
COOLING CAPACITY WITH NON-DUCTED AND DUCTED INDOOR UNITS†					
	Nominal (kBtu/h)		72	96	120
	Rated (kBtu/h)		69	92	114
HEATING CAPACITY WITH NON-DUCTED AND DUCTED INDOOR UNITS†					
	Nominal (kBtu/h)		80	108	126
	Rated (kBtu/h)		77	103	120
ELECTRICAL CHARACTERISTICS WITH NON-DUCTED INDOOR UNITS					
	Cooling	Power Consumption (kW)	4.2	6.2	9.3
		IEER (Btu/W)	24.6	23.7	22.8
	Heating	Power Consumption (kW)	4.4	7.2	9.5
	SCHE (Simultaneous Cooling & Heating Efficiency)		30.00	30.00	30.00
ELECTRICAL CHARACTERISTICS WITH DUCTED INDOOR UNITS					
	Cooling	Power Consumption (kW)	5.0	7.1	9.6
		IEER (Btu/W)	24.2	24.3	23.2
	Heating	Power Consumption (kW)	5.7	8.0	9.8
	SCHE (Simultaneous Cooling & Heating Efficiency)		27.40	27.70	26.70
UNIT DIMENSIONS (W x H x D) (in.)			52-3/4 x 64-3/8 x 31-1/8		
UNIT NET WEIGHT (lb)			672		
COMPRESSOR					
	Type		INVERTER-driven Scroll Hermetic		
	Motor Output (kW)		23.25		
FAN UNIT					
	Air Volume (cfm)		6900	7600	8100
	Motor Output (W)		180 x 2	210 x 2	250 x 2
REFRIGERANT SHIPPING CHARGE (lb)††			26.5		
REFRIGERANT CONNECTING PORT DIAMETER					
	Gas Side (in.)		3/4	7/8	1-1/8
	Liquid Side (in.)		5/8	3/4	
OPERATION TEMPERATURE RANGE					
	Cooling (F db)		5~125		
	Heating (F wb)		-13~64		
MAX ESP (in. wg)			0.24 Max.		
MAX NUMBER OF CONNECTED INDOOR UNITS			15	20	24
MAXIMUM CAPACITY OF COMBINED INDOOR UNITS			50%~150%		
SOUND PRESSURE LEVEL (db(A)†††			58.4	61.7	62.7

LEGEND

COP — Coefficient of Performance
db — Dry Bulb
IEER — Integrated Energy Efficiency Ratio
ESP — External Static Pressure
wb — Wet Bulb

* The source of voltage must not fluctuate more than ± 10%.
† Rated conditions:
Cooling: Indoor air temperature 80 F dry bulb / 67 F wet bulb, Outdoor air temperature 95 F dry bulb.
Heating: Indoor air temperature 70 F dry bulb, Outdoor air temperature 47 F dry bulb / 43 F wet bulb.
†† The amount does not consider extra piping length. Refrigerant must be added on site in accordance with the actual piping length.
††† These values, measured in anechoic chamber, at a point 1 m in front of the unit at a height of 1.4 m.
During actual operation, these values are normally somewhat higher as a result of ambient conditions.

Table 6 — 38VMAR Physical Data

UNIT			144	168	192	216	240
NOMINAL TONS (Ton)			12	14	16	18	20
POWER SUPPLY (V-Ph-Hz)*			460-3-60				
COOLING CAPACITY WITH NON-DUCTED AND DUCTED INDOOR UNITS†							
	Nominal (kBtu/h)		144	168	192	216	240
	Rated (kBtu/h)		136	158	182	204	220
HEATING CAPACITY WITH NON-DUCTED AND DUCTED INDOOR UNITS†							
	Nominal (kBtu/h)		160	188	215	243	257
	Rated (kBtu/h)		150	180	204	222	236
ELECTRICAL CHARACTERISTICS WITH NON-DUCTED INDOOR UNITS							
	Cooling	Power Consumption (kW)	9.0	11.9	14.7	16.8	19.7
		IEER (Btu/W)	24.4	23.1	23.9	23.0	22.4
	Heating	Power Consumption (kW)	9.6	13.3	16.2	18.0	20.2
	SCHE (Simultaneous Cooling & Heating Efficiency)		26.50	27.00	28.20	27.30	27.00
ELECTRICAL CHARACTERISTICS WITH DUCTED INDOOR UNITS							
	Cooling	Power Consumption (kW)	10.6	13.3	15.9	17.9	20.4
		IEER (Btu/W)	24.0	22.9	23.6	21.7	21.0
	Heating	Power Consumption (kW)	11.8	14.4	17.4	19.1	20.9
	SCHE (Simultaneous Cooling & Heating Efficiency)		26.50	25.20	25.50	26.50	26.50
UNIT DIMENSIONS (W x H x D) (in.)			78-3/8 x 64-3/8 x 31-1/8				
UNIT NET WEIGHT (lb)			1137				
COMPRESSOR							
	Type		INVERTER-driven Scroll Hermetic				
	Motor Output (kW)		23.25				
FAN UNIT							
	Air Volume (cfm)		10,100	10,100	11,300	12,300	12,300
	Motor Output (W)		260 x 2	260 x 2	340 x 2	440 x 2	440 x 2
REFRIGERANT SHIPPING CHARGE (lb)††			44.2				
REFRIGERANT CONNECTING PORT DIAMETER							
	Gas Side (in.)		1-1/8				1-3/8
	Liquid Side (in.)		7/8			1-1/8	
OPERATION TEMPERATURE RANGE							
	Cooling (F db)		5~125				
	Heating (F wb)		-13~64				
MAX ESP (in. wg)			0.24 Max				
MAX NUMBER OF CONNECTED INDOOR UNITS			29	34	39	44	49
MAXIMUM CAPACITY OF COMBINED INDOOR UNITS			50%~150%				
SOUND PRESSURE LEVEL (db(A)†††			63.3	63.3	64.9	67.1	67.1

LEGEND

COP — Coefficient of Performance
db — Dry Bulb
IEER — Integrated Energy Efficiency Ratio
ESP — External Static Pressure
wb — Wet Bulb

* The source of voltage must not fluctuate more than ± 10%.
† Rated conditions:
Cooling: Indoor air temperature 80 F dry bulb / 67 F wet bulb, Outdoor air temperature 95 F dry bulb.
Heating: Indoor air temperature 70 F dry bulb, Outdoor air temperature 47 F dry bulb / 43 F wet bulb.
†† The amount does not consider extra piping length. Refrigerant must be added on site in accordance with the actual piping length.
††† These values, measured in anechoic chamber, at a point 1 m in front of the unit at a height of 1.4 m.
During actual operation, these values are normally somewhat higher as a result of ambient conditions.

Table 7 — 38VMAR Physical Data

UNIT			240	264	288	312	336
NOMINAL TONS (Ton)			20	22	24	26	28
POWER SUPPLY (V-Ph-Hz)*			460-3-60				
COOLING CAPACITY WITH NON-DUCTED AND DUCTED INDOOR UNITS†							
	Nominal (kBtu/h)		240	264	288	312	336
	Rated (kBtu/h)		228	248	274	296	308
HEATING CAPACITY WITH NON-DUCTED AND DUCTED INDOOR UNITS†							
	Nominal (kBtu/h)		270	295	323	343	357
	Rated (kBtu/h)		256	282	298	314	322
ELECTRICAL CHARACTERISTICS WITH NON-DUCTED INDOOR UNITS							
	Cooling	Power Consumption (kW)	20.36	23.18	26.35	31.83	33.12
		IEER (Btu/W)	22.4	22.0	21.0	20.2	19.5
	Heating	Power Consumption (kW)	20.22	23.48	25.84	28.85	29.58
	SCHE (Simultaneous Cooling & Heating Efficiency)		30.0	29.6	29.3	28.5	28.0
ELECTRICAL CHARACTERISTICS WITH DUCTED INDOOR UNITS							
	Cooling	Power Consumption (kW)	20.73	23.94	27.96	31.16	33.23
		IEER (Btu/W)	21.1	21.0	20.5	19.8	19.0
	Heating	Power Consumption (kW)	21.02	23.68	25.54	27.39	29.22
	SCHE (Simultaneous Cooling & Heating Efficiency)		28.0	27.5	27.0	26.5	25.5
UNIT DIMENSIONS (W x H x D) (in.)			105-7/8 x 64-3/8 x 31-1/8				
UNIT NET WEIGHT (lb)			16.27				
COMPRESSOR							
	Type		INVERTER-driven Scroll Hermetic				
	Motor Output (kW)		23.25				
FAN UNIT							
	Air Volume (cfm)		14,500	15,500	15,500	16,500	16,500
	Motor Output (W)		225 x 4	280 x 4	280 x 4	330 x 4	330 x 4
REFRIGERANT SHIPPING CHARGE (lb)††			77.2				
REFRIGERANT CONNECTING PORT DIAMETER							
	Gas Side (in.)		1-3/8			1-5/8	
	Liquid Side (in.)		1-1/8				
OPERATION TEMPERATURE RANGE							
	Cooling (F db)		5~125				
	Heating (F wb)		-13~64				
MAX ESP (in. wg)			0.24 Max.				
MAX NUMBER OF CONNECTED INDOOR UNITS			49	54	59	64	64
MAXIMUM CAPACITY OF COMBINED INDOOR UNITS			50%~150%				
SOUND PRESSURE LEVEL (db(A)†††			64.0	65.8	65.8	66.7	67.2

LEGEND

COP — Coefficient of Performance
db — Dry Bulb
IEER — Integrated Energy Efficiency Ratio
ESP — External Static Pressure
wb — Wet Bulb

* The source of voltage must not fluctuate more than ± 10%.
† Rated conditions:
Cooling: Indoor air temperature 80 F dry bulb / 67 F wet bulb, Outdoor air temperature 95 F dry bulb.
Heating: Indoor air temperature 70 F dry bulb, Outdoor air temperature 47 F dry bulb / 43 F wet bulb.
†† The amount does not consider extra piping length. Refrigerant must be added on site in accordance with the actual piping length.
††† These values, measured in anechoic chamber, at a point 1 m in front of the unit at a height of 1.4 m.
During actual operation, these values are normally somewhat higher as a result of ambient conditions.

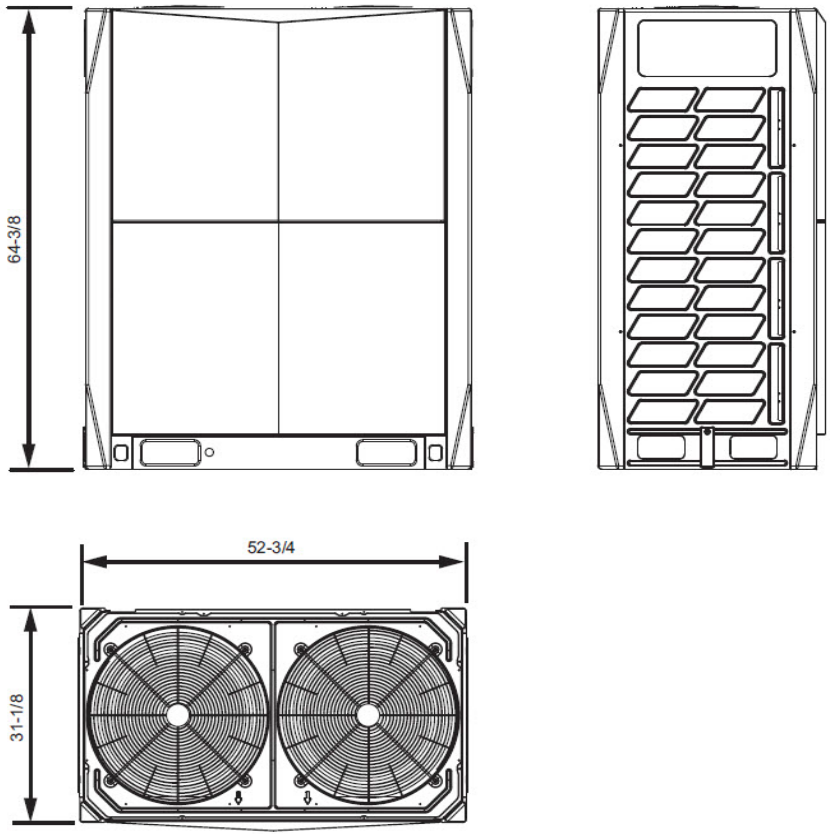

NOTE: All dimensions are in inches.

Fig. 4—38VMAR Dimensions (6 - 10 Tons)

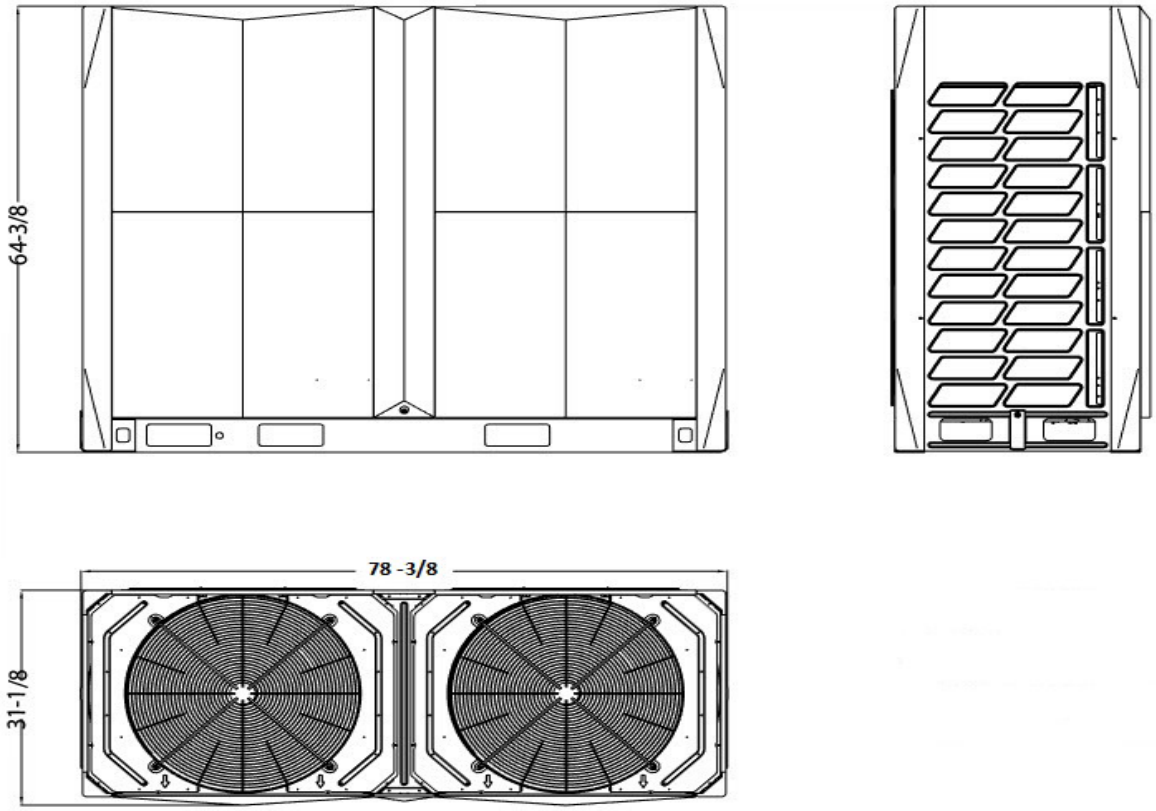

Fig. 5—38VMAR Dimensions (12 - 20 Tons)

NOTE: All dimensions are in inches.

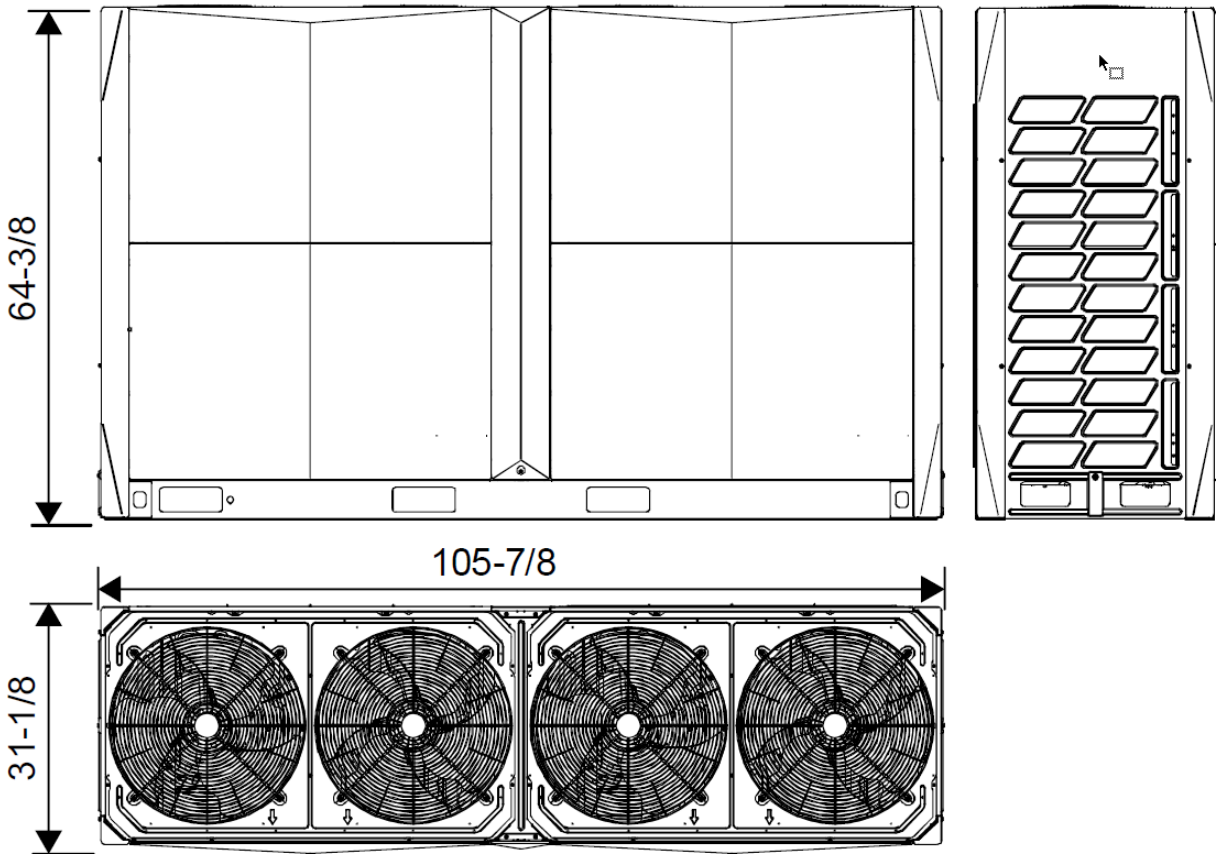

Fig. 6—38VMAR Dimensions (20 - 28 Tons)

NOTE: All dimensions are in inches.

INSTALLATION

Step 1 — Unpack and Inspect Units — Units are packaged for shipment to avoid damage during normal transit and handling. It is the receiving party's responsibility to inspect the equipment upon arrival. Any obvious damage to the carton and/or its contents should be reported on the bill of lading and a claim should be filed with the transportation company and the factory. Unit should always be stored in a dry place and in the proper orientation as marked on the carton.

After determining the condition of the unit exterior, carefully remove the packaging and inspect for hidden damage. Check to ensure that items (thermostats, controller, etc.) are accounted for whether packaged separately or shipped at a later date. Any hidden damage should be recorded, a claim should be filed with the transportation company, and the factory should be notified. In the event a claim for shipping damage is filed; the unit, shipping carton, and all packing must be retained for physical inspection by the transportation company. All units should be stored in the factory shipping carton with internal packaging in place until installation.

PROTECTING UNITS FROM DAMAGE — Do not apply force or pressure to the coil, piping, or drain stub-outs during handling. All units should be handled using the proper forklift holes or lifting locations.

The unit must always be properly supported. Temporary supports used during installation or service must be adequate to hold the unit securely. To maintain warranty; protect units against hostile environments, theft, vandalism, and debris on job site. Do not allow foreign material to fall into the unit. Failure to do so may have serious adverse effects on unit operation. Failure of any unit caused by deposits of foreign material inside the unit will not be covered by the manufacturer's warranty. Some units and/or job conditions may require some form of temporary covering during construction.

PREPARING JOB SITE FOR UNIT INSTALLATION — To save time and to reduce the possibility of costly errors, set up a complete sample installation in a typical location at job-site. Check all critical dimensions such as pipe and wire connection requirements. Refer to job drawings and product dimension drawings as required. Instruct all trades in their parts of the installation. Units must be installed in compliance with all applicable local code requirements.

IDENTIFYING AND PREPARING UNITS — Be sure the power requirements match the available power source. Refer to the unit nameplate and the wiring diagram. In addition:

- Check all the tags on the unit to determine if the shipping screws are to be removed. Remove the screws as directed.
- Rotate the fan blade by hand to ensure that the fan is unrestricted and can rotate freely. Check for shipping damage and fan obstructions.

Step 2 — Position the Unit — Units are recommended for outdoor use. See Fig. 7 for single unit installation. See Fig. 8 for multiple or parallel unit installation. The unit should be mounted on concrete and fastened to anchor bolts to prevent the unit from tipping. Units installed in areas that are exposed to ambient temperatures below freezing (32°F) should be installed on a snow/ice stand as defined by local codes.

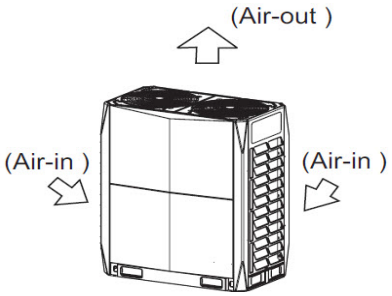

Fig. 7— Single Unit Installation

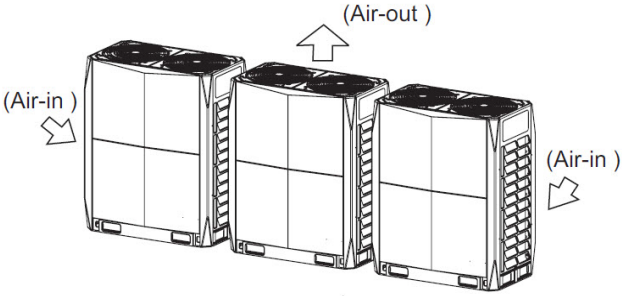

Fig. 8— Multiple or Parallel Unit Installation

HANDLING THE UNIT — The angle of inclination should not be more than 15 degrees when carrying the unit, to avoid overturn of the unit.

Forklift handling: When using a forklift for lifting or transporting the unit, insert the prongs of the forklift into the rectangular holes as shown in Fig. 9 and 10.

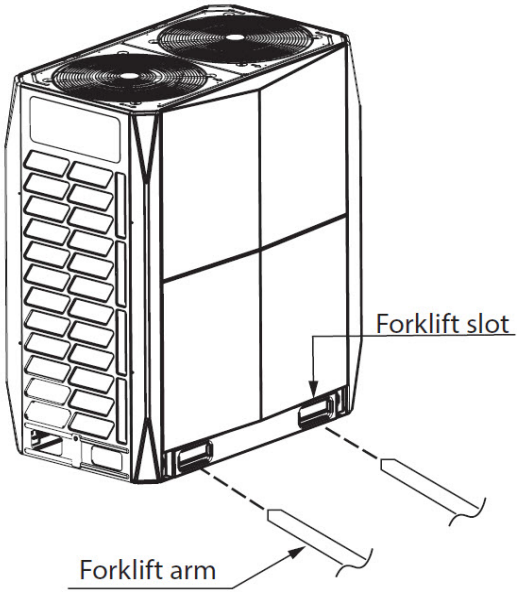

Fig. 9— Handling the Unit Using a Forklift

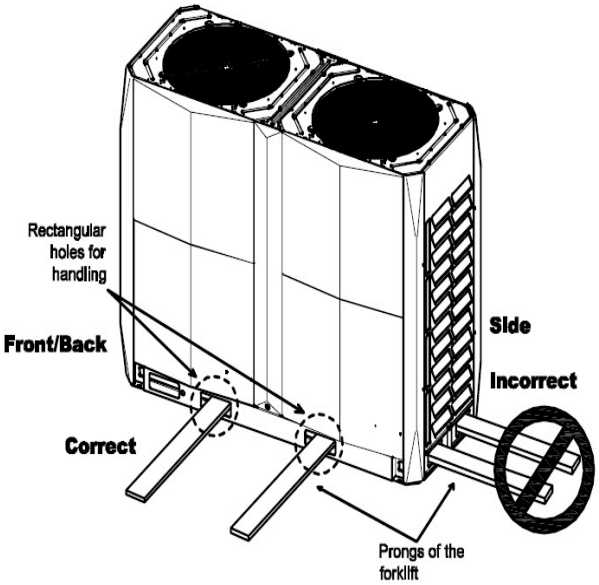

Fig. 10— Handling the Unit Using a Forklift

Lifting the unit: Make sure the lifting cable is able to withstand the unit's weight. Connect the cables to the bottom rigging hole locations as shown in Fig. 11. Use 2 cables, each connected diagonally to the bottom rigging hole locations. Make sure each cable is long enough, to avoid excess tension and force on the surfaces of the unit. To avoid damage to the unit from lifting cables, 2-in. thick wood, cloth, or cardboard spacers should be installed between the cables and contact surfaces of the unit.

⚠DANGER

Do not stand below the unit while it is suspended in the air. If the unit falls, it may lead to severe personal injury or death.

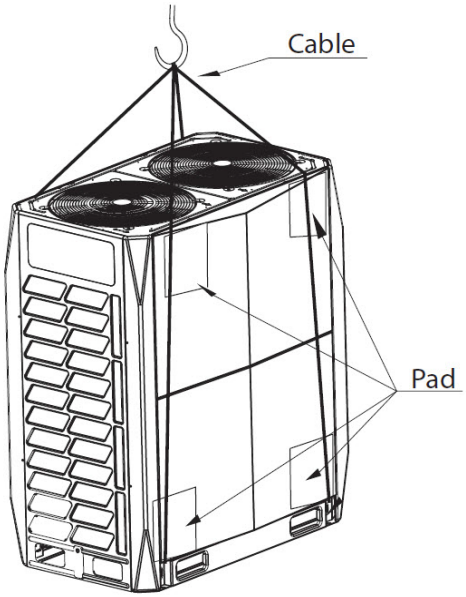

Fig. 11— Lifting the Unit with Cables

CONCRETE BASE REQUIREMENTS

- The unit's base must be made of solid concrete.
- Ensure that the base is level and that the unit's weight is distributed evenly.
- Create an outlet near the base for drainage.
- Ensure the roof can handle the unit's weight if mounted on the roof.
- When piping from the bottom of the unit, the base height should be no less than 8 in. See Fig. 12−14 for additional specifications.

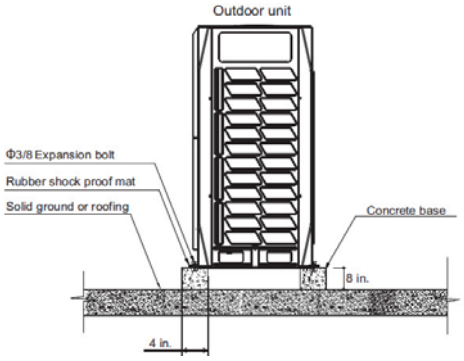

Fig. 12— Concrete Base (Side View)

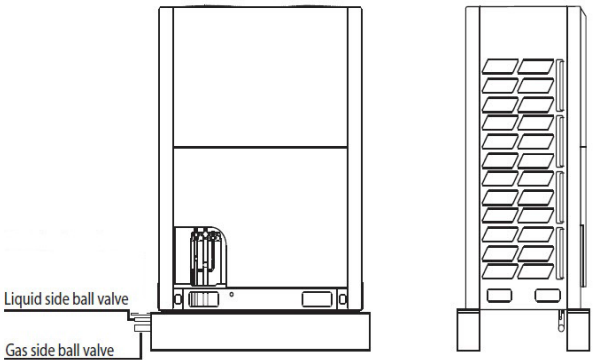

Fig. 13— Concrete Base (Front and Side View)

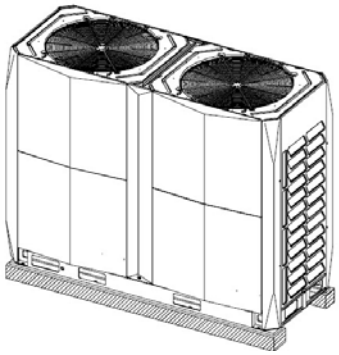

Fig. 14— Concrete Base (Front and Side View)

SPACE REQUIRED FOR INSTALLATION AND MAINTENANCE — Ensure there is enough space provided for installation and maintenance. See Fig. 15.

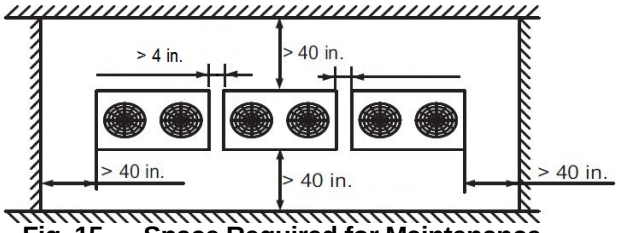

Fig. 15— Space Required for Maintenance

If the outdoor unit is higher than the surrounding obstacle, follow Fig. 16−18.

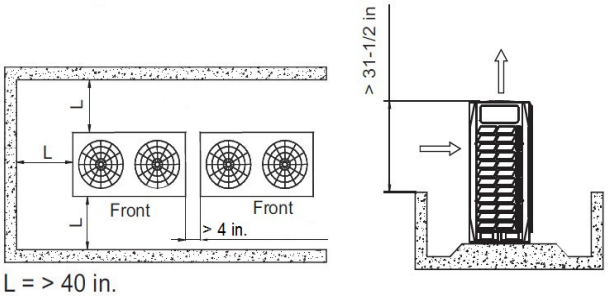

Fig. 16— Space Required for One Row

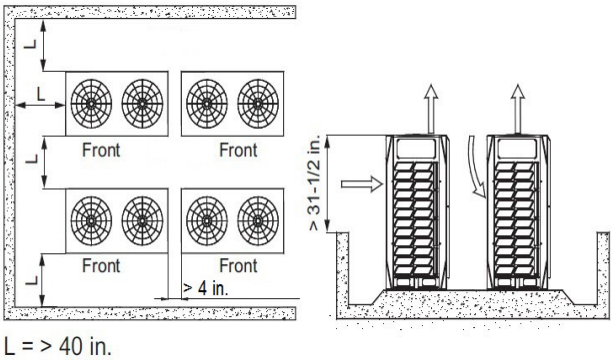

Fig. 17— Space Required for Two Rows

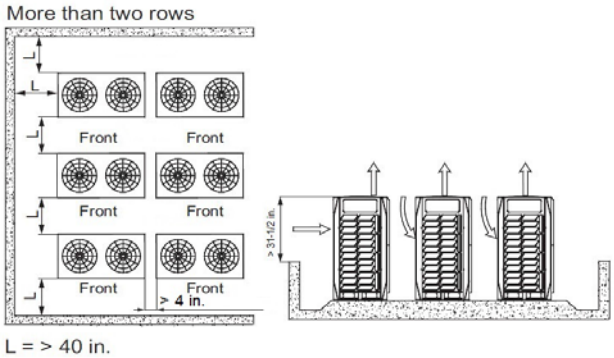

Fig. 18— Space Required for More Than Two Rows

If the outdoor unit is lower than the surrounding obstacles, add a field-supplied duct to deflect condenser air flow as shown in Fig. 19.

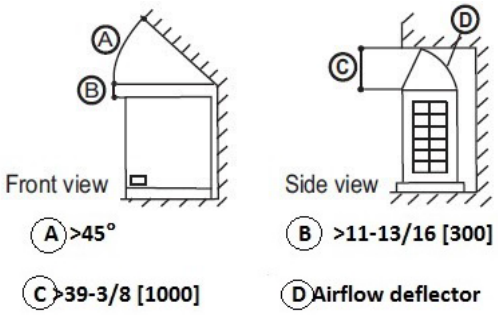

Fig. 19— Condenser Air Flow Deflector

SNOW GUARD INSTALLATION — To protect the outdoor unit coil from snow accumulation in certain climates, install snow guards in the field. Refer to the snow guard installation manual for dimensional drawings for field fabrication and additional information on snow guards.

The outdoor unit must be mounted at least 12 in. off the ground or 12 in. above the average snow accumulation depth, whichever is greater. Refer to the snow guard installation manual for more details.

Clearances for the sides and back of the outdoor unit must be at least 16 in. greater than standard installation guidelines.

ACCESSING REFRIGERANT AND ELECTRICAL CONNECTIONS — To access electrical and refrigerant connections follow the steps below:

Removing the Upright Posts—Remove the four screws from the left and right upright posts as shown in Fig. 20.

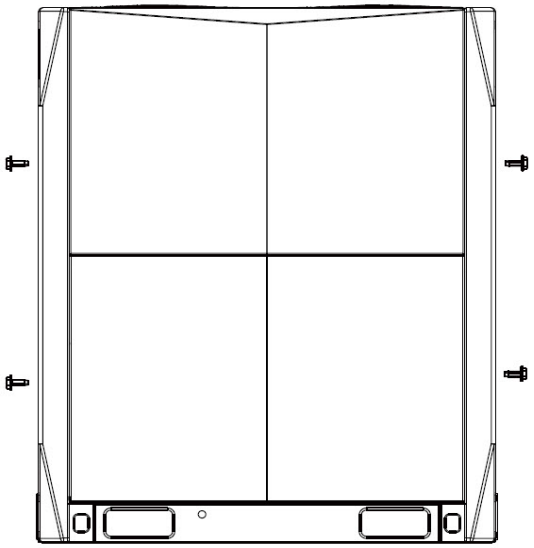

Fig. 20— Removing the Upright Post Screws

Rotate the upright posts 5 to 10 degrees, lift them up about 0.079 in (2 mm) to remove. See Fig. 21.

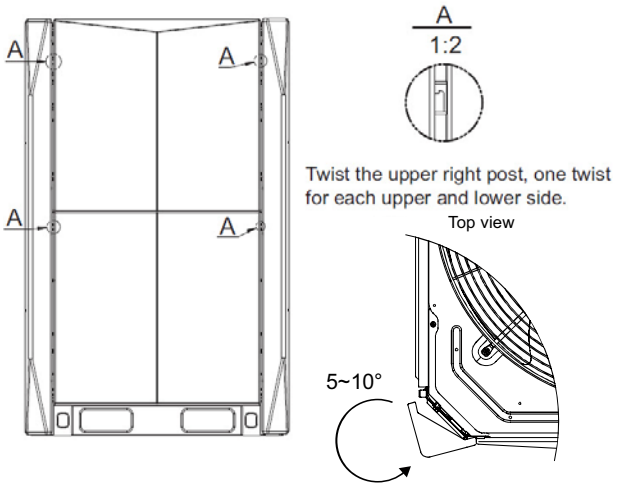

Fig. 21— Removing the Upright Posts

Removing the Side Panels—Remove the four screws on the top and bottom side panels. Lift them up about 0.12 in. (3 mm) and remove. See Fig. 22.

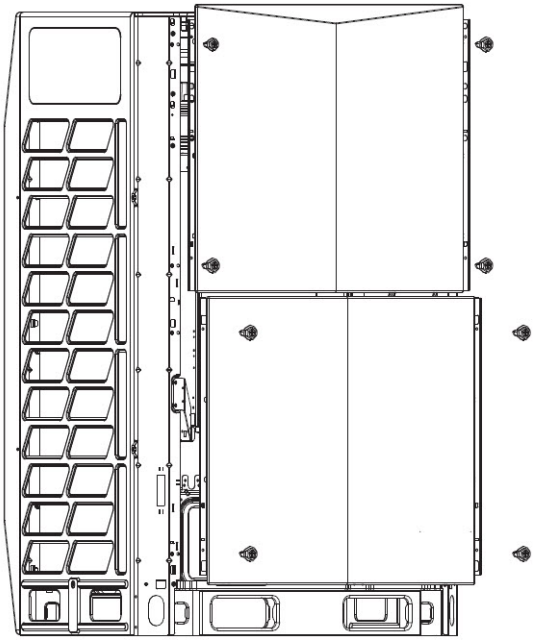

Step 22 — Connect Refrigerant Piping

REFRIGERANT PIPING CONNECTIONS—Fig. 21 describes each refrigerant pipe. When making the refrigerant piping connections, follow the steps below:

1. Remove the valve caps, and ensure the valves are closed.
2. Use a pipe cutter to remove small pipe caps.
3. Use a torch to remove the large pipe caps.
4. Create a small hole in the rubber gasket and feed the connecting pipes through the hole as shown in Fig. 22.
5. Wrap a wet cloth around the valves before brazing.
6. Braze each connecting pipe to its corresponding valve. See Fig. 23.
7. Brazing should be performed under a constant flow of high-purity nitrogen to prevent oxidation and contamination within the piping.

NOTE: The rubber gasket helps prevent animal nesting.

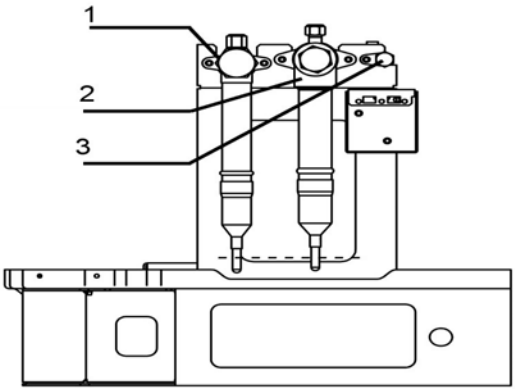

LEGEND
1 — Mixed-phase side ball valve (high pressure)
2 — Gas side ball valve (low pressure)
3 — Service port (for pressure testing and refrigerant charging)

Fig. 23— Pipe Descriptions

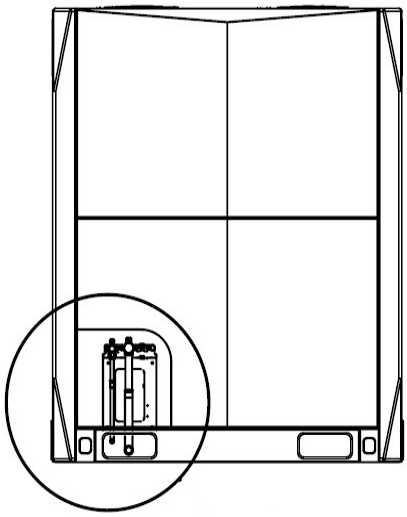

Fig. 25— Accessory Connecting Pipes

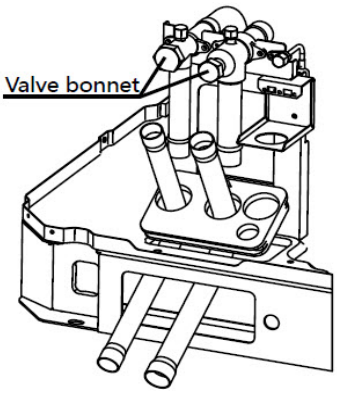

Fig. 24— Rubber Gasket Locations

REFRIGERANT PIPING MEASUREMENTS — Figure 26 and Table 8 show the pipe length measurements when connecting the outdoor units to indoor units. The equivalent length of the Y joint is 1.64 feet.

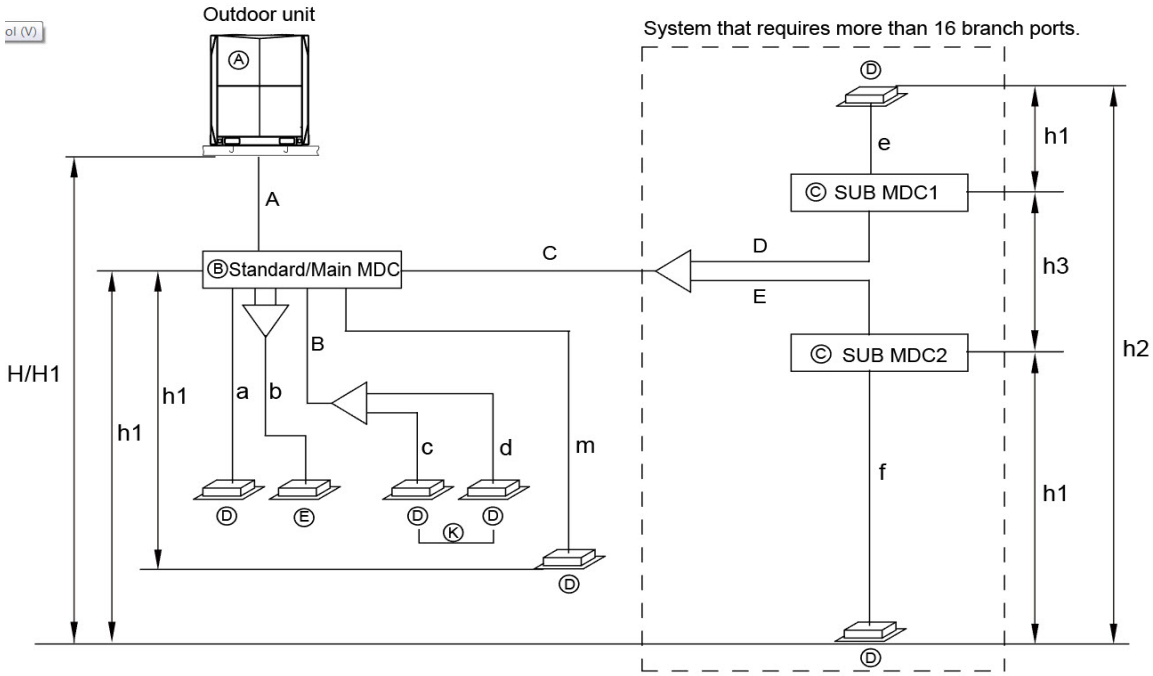

Fig. 26— Piping Lengths and Drop Height

Table 8 — Permitted Pipe Lengths and Drop Heights

DESCRIPTION			ALLOWABLE VALUE (ft)	PIPES
Piping Length	Total Extension of Pipe (Liquid Pipe)	Actual Length	≤ 3280	A+B+C+D+E+a+b+c+d+e+f+m
	Furthest Piping Length	Equivalent Length	≤ 623	A+C+E+f
		Actual Length	≤ 541	
	Distance Between Outdoor Unit & Main MDC	Actual Length	≤ 360	A
	Distance Between MDC & Indoor Unit		≤ 131	B+d, C+D+e, C+E+f, m
Piping Height Difference	Height Between Outdoor & Indoor Unit	Outdoor Unit Above	≤ 164	H
		Outdoor Unit Below	≤ 131	H1
	Height Between MDC & Indoor Unit		≤ 49*	h1
	Height Between Indoor Units		≤ 98**	h2
	Height Between MDCs		≤ 49	h3

*The maximum piping length allowable for indoor unit capacity 72K or more is 32 ft.
**The maximum piping length allowable for indoor unit capacity 72K or more is 64 ft.

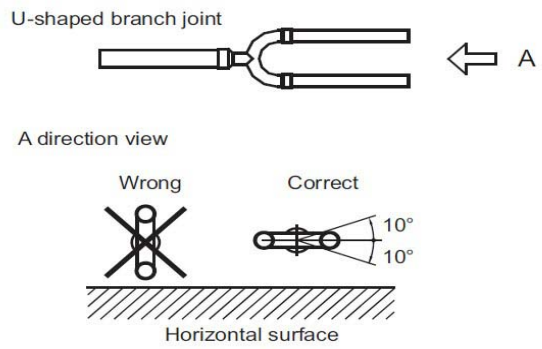

Fig. 27— Correct Branch Joint Positioning

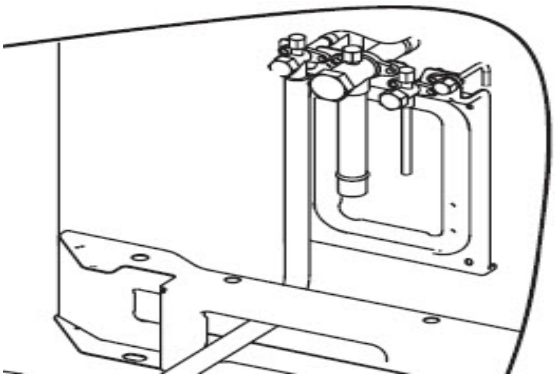

Fig. 28— Correct Branch Joint Positioning

Table 9 — Main Pipe Selection (A)

OUTDOOR UNIT CAPACITY (kBtu/h)	HIGH PRESSURE SIDE (in.)	LOW PRESSURE SIDE (in.)
72	5/8	3/4
96	3/4	7/8
120	3/4	1 - 1/8
144	7/8	1 - 1/8
168	7/8	1 - 1/8
192	7/8	1 - 1/8
216	1 - 1/8	1 - 1/8
240	1 - 1/8	1 - 3/8
240L	1 - 1/8	1 - 3/8
264	1 - 1/8	1 - 3/8
288	1 - 1/8	1 - 3/8
312	1 - 1/8	1 - 5/8
336	1 - 1/8	1 - 5/8

Table 10 — Grouped Indoor Unit Pipe Selection (B)

TOTAL CAPACITY CODE OF DOWNSTREAM INDOOR UNITS (kBth/h)	LIQUID SIDE (in.)	GAS SIDE (in.)
≤54	3/8	5/8

Table 11 — Selection of Pipes Between MDCs (C,D,E)

TOTAL CAPACITY OF DOWNSTREAM INDOOR UNITS (kBtu/h)	HIGH PRESSURE SIDE (in.)	LOW PRESSURE SIDE (in.)	LIQUID SIDE (in.)
≤72	5/8	3/4	3/8
73-108	3/4	7/8	3/8
109-126	3/4	1 - 1/8	1/2
127-144	7/8	1 - 1/8	1/2
145-168	7/8	1 - 1/8	5/8

Table 12 — Indoor Unit Pipe Selection (a, b, c, d, e, f)

INDOOR UNIT CAPACITY (kBtu/h)	LIQUID SIDE (in.)	GAS SIDE (in.)
07, 09, 12, 15	1/4	1/2
18, 24, 30, 36, 48, 54	3/8	5/8
72	3/8	3/4
96	3/8	7/8

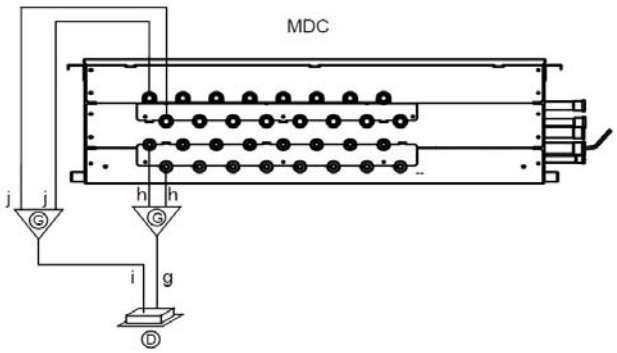

Fig. 29— Merge the two ports

Table 13 — Twinned Port Indoor Unit Pipe Selection (g,h,i,j)

INDOOR UNIT CAPACITY (kBtu/h)	Y JOINT MODEL	LIQUID SIDE (in.)		GAS SIDE (in.)	
		g	h	i	j
72	40VM900043	3/8	3/8	5/8	5/8
96		3/8	3/8	7/8	5/8

Table 14 — Y Joint Selection

TOTAL CAPACITY DOWNSTREAM INDOOR UNITS (kBtu/h)	Y JOINT MODEL	HIGH PRESSURE SIDE (in.)	LOW PRESSURE SIDE (in.)	LOW PRESSURE SIDE (in.)
<72	40VM900041	5/8	3/4	3/8
73-108		3/4	7/8	3/8
109-126	40VM900042	3/4	1 - 1/8	1/2
127-144		7/8	1 - 1/8	1/2
145-168		7/8	1 - 1/8	5/8

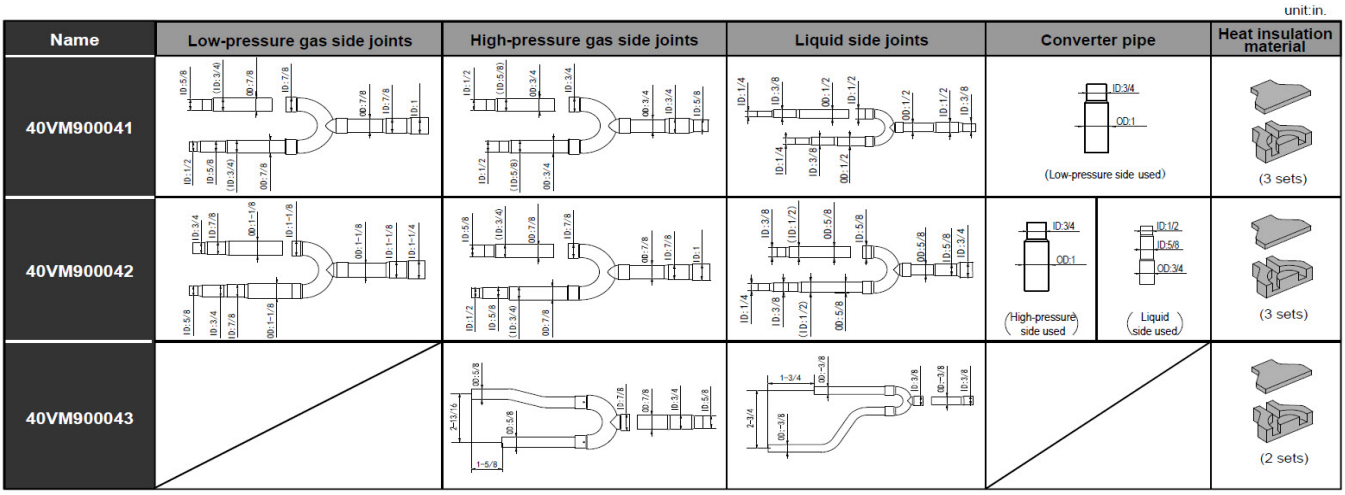

Fig. 30— Y Joint

Step 4 — Pressure and Vacuum Test System

After completing the refrigerant piping, perform the following pressure test:

1. Connect the nitrogen canister to the system through the high-pressure gas side valve from the meter connector.
2. Apply nitrogen pressure gradually to 540 psig.
3. If there is an apparent rapid pressure decrease, locate and repair the leak, and pressurize the system again.
4. Repeat steps 1−3 until the system remains at 540 psig for 24 hours.

After completing the pressure test, perform the following vacuum test:

1. Relieve the system of the nitrogen gas.
2. Connect a vacuum pump capable of at least 85 cfm to the system.
3. Vacuum the system to 500 microns or lower and check for rapid pressure change.
4. Repeat steps 1−3 until the system remains at 500 microns or lower for an hour.

When finished, replace the vacuum pump with the R-410A refrigeration canister.

Step 5 — Adjust Refrigerant Charge

Calculate the amount of refrigerant (R-410A) to add using Tables 15−19 and Fig. 29.

Table 15 — Refrigerant to Add per High Pressure Pipe

HIGH PRESSURE (MIXED-PHASE) PIPE DIAMETER Ø (in.)	REFRIGERANT TO BE ADDED PER FOOT (lb/ft)
1 -1/8	0.254
7/8	0.141
3/4	0.094
5/8	0.061

Table 16 — Refrigerant to Add per Liquid Pipe

LIQUID PIPE DIAMETER Ø (in.)	REFRIGERANT TO BE ADDED PER FOOT (lb/ft)
5/8	0.114
1/2	0.074
3/8	0.038
1/4	0.015

Table 17 — Refrigerant to Add for Main MDCs

Main MDC Model Name	Charge Amount per Unit (lbs)
40VMD0006M	11.0
40VMD0008M	11.0
40VMD0010M	11.0
40VMD0016M	11.0
40VMD0016ML	15.4

Table 18 — Refrigerant to Add for Sub MDCs

Main MDC Model Name	Charge Amount per Unit (lbs)
40VSD006S	2.2
40VSD008S	2.2
40VSD010S	4.4
40VSD016S	4.4

Table 19 — Refrigerant to Add for Connected Capacity

Total Connected Capacity of Indoor Units	Charge Amount per Unit (lbs)
50%~100%	0
100%~120%	1.1
120%~130%	2.2
130%~	3.3

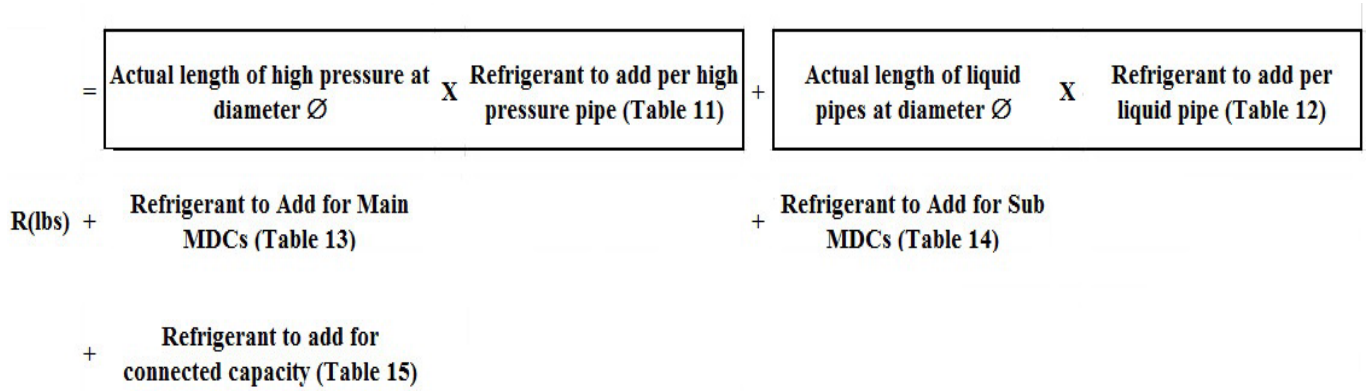

Fig. 31— Calculating the Amount of Refrigerant to Add

Maximum Refrigerant Charge

There is a limit to the amount of refrigerant that can be charged into a unit. Regardless of the amount yielded by the formula. See Fig. 29. Observe the maximum refrigerant charge in Table 20.

Table 20 — Max Refrigerant Charge (Lbs)

Outdoor Unit Model Name	72	96	120	144	168	192	216	240
Max *1 Refrigerant Charge	57.32	61.73	66.14	121.25	121.25	143.30	165.34	165.34

Outdoor Unit Model Name	264	288	312	336
Max *1 Refrigerant Charge	165.34	165.34	165.34	165.34

* 1 maximum refrigerant charge: the amount of refrigerant to be added on site.

All service valves on the outdoor units should remain fully closed.

R-410A refrigerant should be added (in liquid state) at the liquid line service port on the unit.

If the total calculated amount of refrigerant can be added to the system, the charging process is finished.

If the total calculated amount of refrigerant cannot be added to the system; close the valve on the refrigerant bottle, and move the charging house from the liquid line service port to the suction line service port.

Open the suction and liquid service valves on the unit and start the system in cooling mode.

Slowly open the valve on the refrigerant bottle, and carefully release the liquid refrigerant into the suction service port.

The charging process is finished when the total calculated charge amount is added completely to the system.

Step 6 — Complete Electrical Connections

⚠ WARNING

Electrical shock can cause personal injury and death. Disconnect power supply before making wiring connections. There may be more than one disconnect switch. Tag all disconnect locations to alert others not to restore power until work is completed.

⚠ WARNING

All units must be wired strictly in accordance with the wiring diagram furnished with the unit. Any wiring different from the wiring diagram could result in personal injury and property damage.

⚠ CAUTION

Any original factory wiring that requires replacement must be replaced with wiring material having a temperature rating of at least 105 C.

Ensure supply voltage to the unit, as indicated on the serial plate, is not more than 10% over the rated voltage or 10% under the rated voltage.

Failure to follow these recommendations may result in equipment damage.

POWER SUPPLY — Electrical characteristics of the available power supply must agree with the unit nameplate rating. Circuit breaker size and supply voltage must be as shown in Table 21.

⚠ WARNING

Operating unit on improper supply voltage or with excessive phase imbalance may result in equipment damage and can affect the manufacturer's warranty.

Table 21 — 38VMAR Electrical Data

SUPPLY VOLTAGE POWER SUPPLY (V-Ph-Hz)	38VMAR UNIT SIZE	POWER SUPPLY	
		MCA	RECOMMENDED FUSE SIZE
208/230-3-60	072	43	50
	096	45	50
	120	46	50
	144	70	80
	168	70	80
	192	71	80
	216	81	100
	240	81	100
	240L	101	110
	264	104	110
	288	104	110
	312	106	110
	336	106	110
460-3-60	072	20	30
	096	22	30
	120	22	30
	144	35	40
	168	35	40
	192	35	40
	216	38	40
	240	38	40
	240L	52	60
	264	54	60
	288	54	60
	312	55	60
	336	55	60

LEGEND

MCA — Minimum Circuit Amps

OPENING AND CLOSING THE ELECTRICAL COMPONENT BOX—Open and close the electric control box cover as shown in Fig. 32. Do not apply excessive force to the cover. Use a screwdriver to loosen the screw, but do not remove the screw.

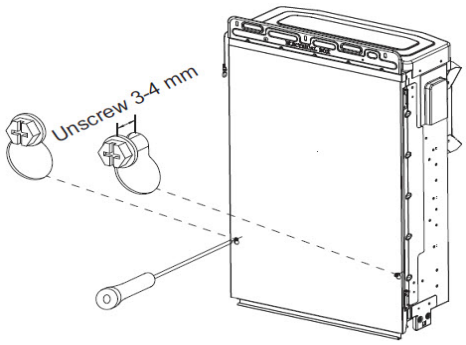

Fig. 32— Removing Screws From the Panel

While holding the cover plate from the bottom, lift it slightly so that the screws clear their keyholes. Tilt it outwards and remove as shown in Fig. 33 and 34.

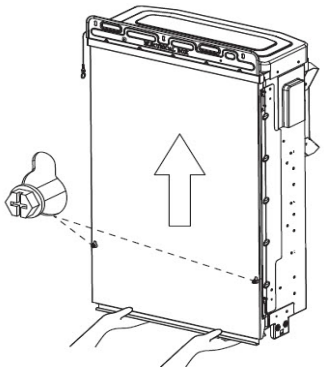

Fig. 33— Lift the Cover Plate Up

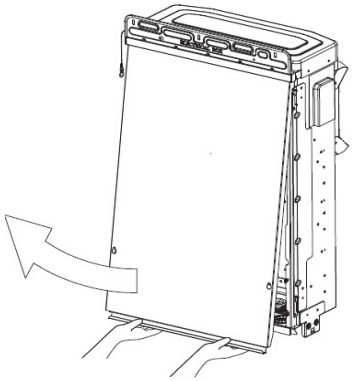

Fig. 34— Remove the Cover Plate

POWER WIRING — Installation of wiring must conform with the local codes and with NEC ANSI/NFPA 70, current editions. Units must be electrically grounded in conformance with the code. In Canada, wiring must comply with the CSA C22.1, Electrical Code.

Figure 35 shows the location of the outdoor units power terminal block.

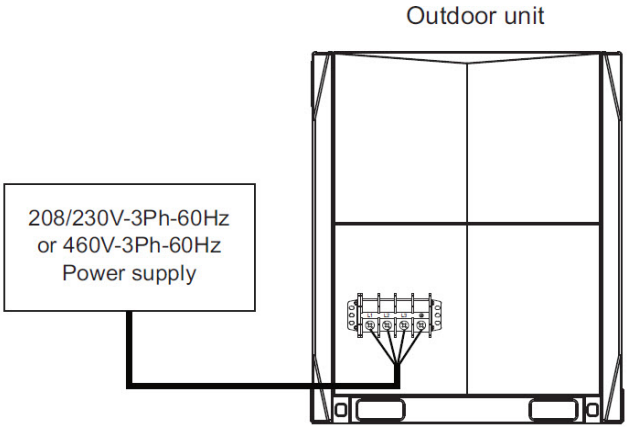

Fig. 35— Outdoor Unit Power Terminal Block

After selecting the power wire, strip a suitable length of insulation and attach the ring terminal using the proper crimping tool. Use the ring terminals provided to connect the power wiring as shown in Fig. 36.

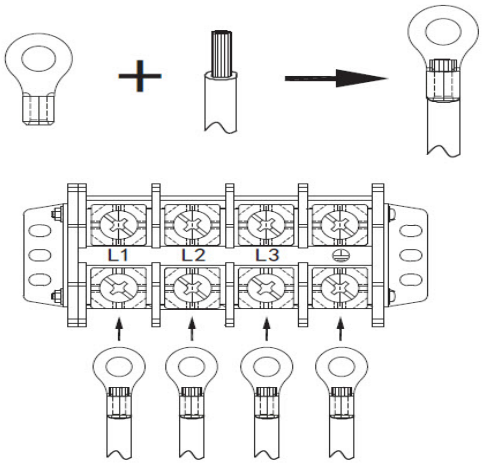

Fig. 36— Stripping and Attaching the Power Wire

Fig. 37 shows the arrangement of the power wires.

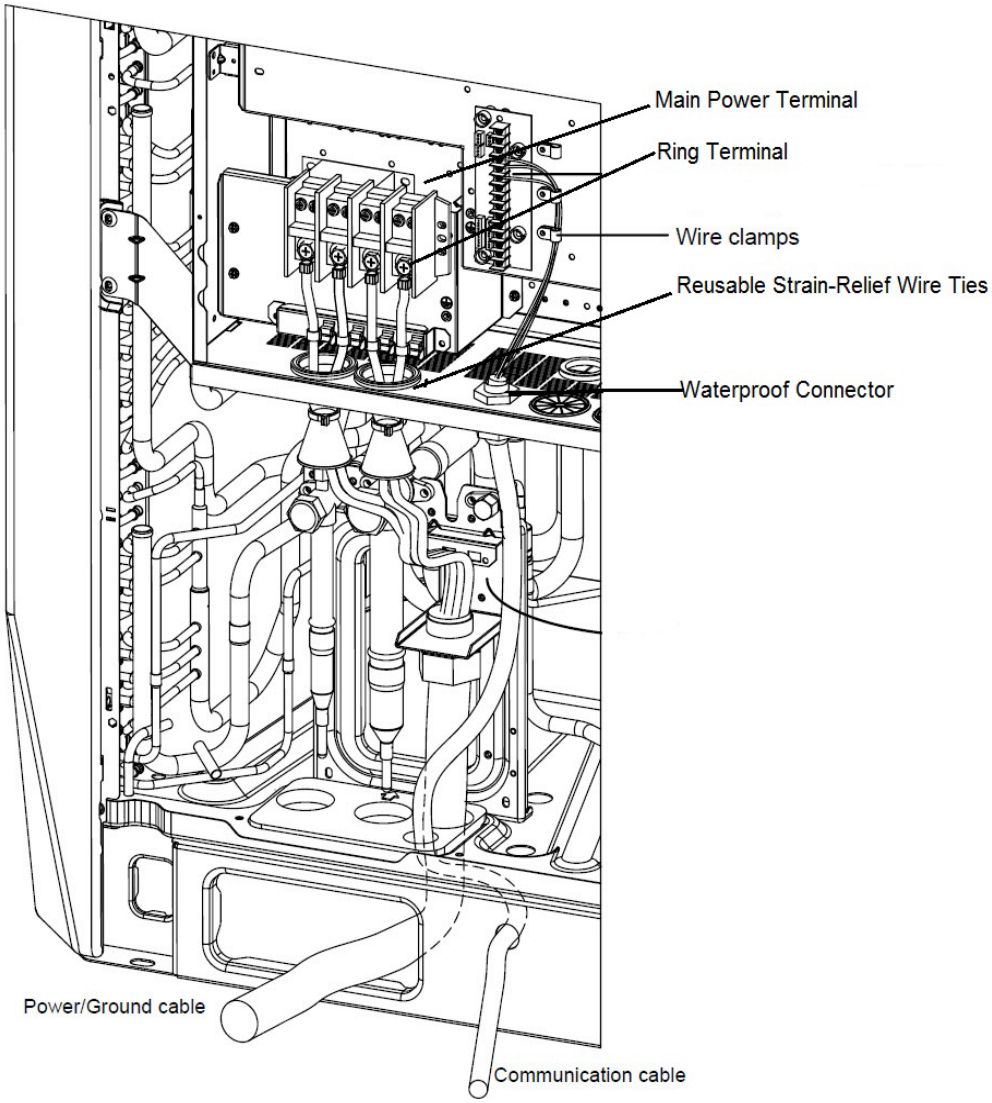

Fig. 37— Outdoor Unit Power Wiring Arrangement

WIRING THE COMMUNICATION TERMINAL BLOCK — Figure 38 is the communication port diagram for the outdoor unit.

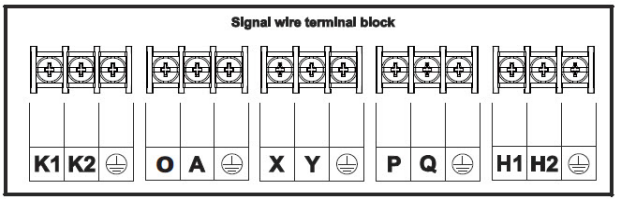

LEGEND

K1, K2	Reserved
O, A	To kWh meter
X, Y	To centralized controller
P, Q	To MDC communication bus
H1, H2	Reserved

Fig. 38— Outdoor Unit Communication Port Diagram

COMMUNICATION CABLE — The communication cable must be a shielded 2-core twisted pair cable. The diameter of the wire should be AWG 16 to 20. The maximum wire length should be within 3,937 ft. between the outdoor and indoor units and within 820 ft. between the wired controller and indoor units. The communication wires are sold separately; however, they can be obtained through Carrier.

Figure 39 shows a typical communication wire from Carrier.

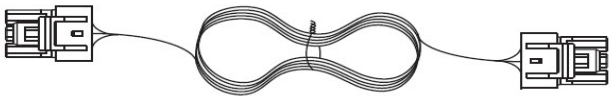

Fig. 39— Typical Communication Wire

For a typical communication wiring layout review Fig. 40.

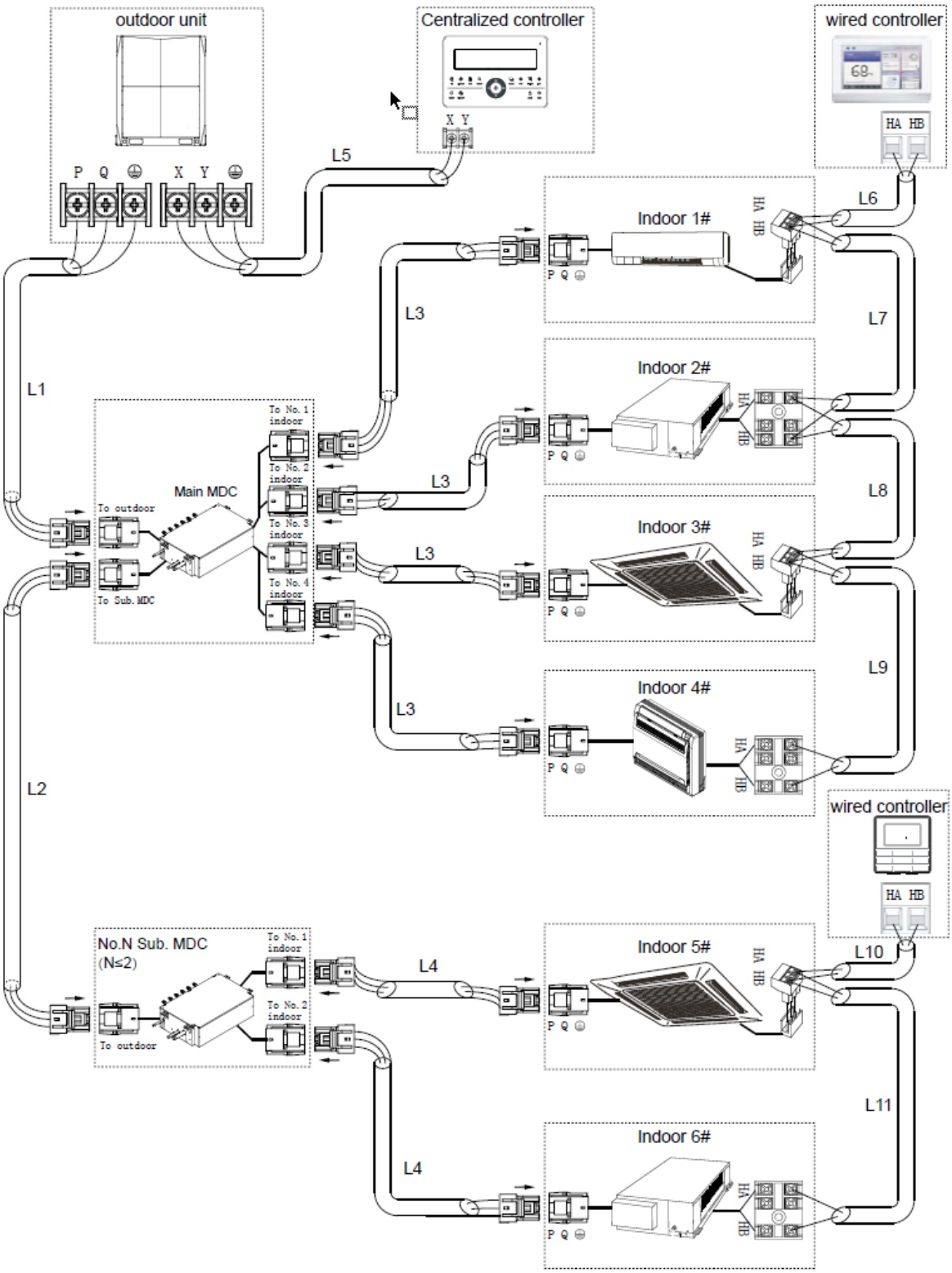

L1 + L2, L5 ≤ 3937 ft 16 - 20 AWG, 2-Core Stranded Shield
L3, L3 + L4 ≤ 3937 ft 16 - 20 AWG, 2-Core Stranded Shield
L6 + L7 + L8 + L9, L10 + L11 ≤ 820 ft 18 - 20 AWG, 2-Core Stranded Shield

Legend
MDC—Multiport Distribution Controller

NOTE: Field wire must use copper conductors only.

Fig. 40— Typical Communication Wiring Diagram

COMMUNICATION WIRING — Do not route the communication wire with the high voltage power wire or allow it to come in contact with the non-insulated piping and sharp edges.

> IMPORTANT: Wiring for communication shall be 2 in. or more away from power source wiring to avoid electric noise. Do not insert control/communication and power source wire in the same conduit.
>
> Pay attention to the polarity of the communication wire.

OPTION/EXTENSIONS OF COMMUNICATION WIRING — To extend the control wiring or establish terminal connections, use the PQE connection wire supplied in the accessory kit, and use the following steps.

1. Cut the connector on the outdoor unit side as shown in Fig. 41.

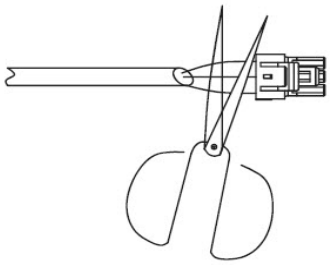

Fig. 41— Shearing Outdoor Connector

2. Strip a suitable length of the insulation layer as shown in Fig. 42.

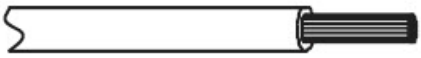

Fig. 42— Stripping The Wire

3. Use a screwdriver to secure the communication wire on the outdoor unit communication terminal as shown in Fig. 43.

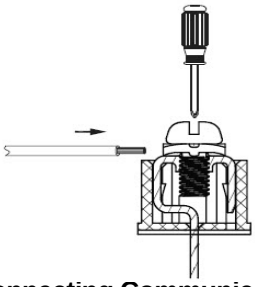

Fig. 43— Connecting Communication Wire To Outdoor Unit Communication Terminal

If communication wires are used to connect MDC and the indoor unit, locate the corresponding port and plug it directly as shown in Fig. 44.

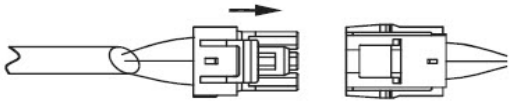

Fig. 44— Connecting The Communication Wires

If it is not possible to buy communication wires from Carrier, connect the indoor unit and MDC of the communication wires using the connector provided with the accessories. See Fig. 45.

> **⚠ CAUTION**
>
> NEVER CONNECT the main power source to the control or communication terminal block.
>
> USE AN APPROPRIATE SCREWDRIVER for tightening the terminal screws. Do not over tighten the terminal screws.
>
> Failure to follow these procedures may result in personal injury or damage to equipment.

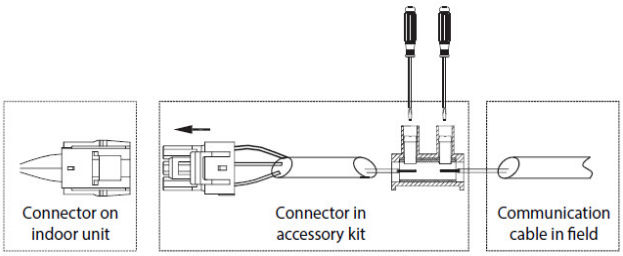

Fig. 45— Connecting the Communication Cable to Indoor Unit to Outdoor Unit using the Supplied Connector

START-UP

Trial Run — Set a different address for each indoor unit. The addresses can range from 0 to 63. The addresses are set manually using the wireless remote or wired controller. Set the total number of indoor units on the main board.

Set the total number of indoor units on the main board.

Main Menu

- Hold the **MENU** button down for five seconds to enter the menu.
- Press **UP/DOWN** button to select and set the item. When the number is chosen, the number will flash. Then press **OK** to confirm and set the next number. Use Table 22 as a reference.
- Hold **OK** again to exit the main menu.

Table 22 — List of Menu Functions

Symbol	Function	Item	Description
n1_	Special function for debugging	n11	Test operation mode
		n14	Forced cooling
		n15	Forced heating
		n16	Forced defrosting
n2_	Refrigerant recycle function	n21	Refrigerant recycled to outdoor unit
		n22	Refrigerant recycled to indoor units
		n23	Refrigerant recycled to piping
n3_	Error and version query	n31	Historical malfunction query
		n32	Clear the historical malfunction
		n33	Version of fan inverter module
n4_	Night time setting	n41	6/10H (default)
		n42	6/12H
		n43	8/10H
		n44	8/12H
n5_	Silent mode setting	n51	Night silent mode
		n52	Silent mode
		n53	Super silent mode
		n54	Silent mode off (default)
n6_	Defrost mode setting	n61	Easy to defrost
		n62	Standard mode (default)
		n63	Hard to defrost
n7_	Energy saving mode setting	n71	Level demand 1 (No limitation) (default)
		n72	Level demand 2
		n73	Level demand 3
		n74	Level demand 4
		n75	Level demand 5
		n76	Level demand 6
n8_	Static pressure mode setting	n81	Standard static pressure mode (default)
		n82	Low static pressure mode (reserved)
		n83	Medium static pressure mode (reserved)
		n84	High static pressure mode (reserved)
n9_	Test mode for cooling: the goal evaporator temperature	n91	Medium level (Tes=3),automatically adjust
		n92	High level (Tes=0),automatically adjust
		n93	Low level (Tes=6),automatically adjust
		n94	Low level 1 (Tes=9),locked
		n95	Low level 2 (Tes=6),locked
		n96	Medium level 1 (Tes=3),locked
		n97	Medium level 2 (Tes=0),locked
		n98	High level (Tes=-3),locked
nA_	Tcs mode for heating: the goal condenser temperature	nA1	Medium level (Tcs=48),automatically adjust
		nA2	High level (Tcs=51),automatically adjust
		nA3	Low level (Tcs=45),automatically adjust
		nA4	Low level 1 (Tcs=42),locked
		nA5	Low level 2 (Tcs=44),locked
		nA6	Medium level 1 (Tcs=48),locked
		nA7	Medium level 2 (Tcs=51),locked
		nA8	High level (Tcs=54),locked
nb_	Temperature unit setting	nb1	Temperature unit (Celsius)
		nb2	Temperature unit (Fahrenheit)
nC_	Change to T4 value setting point for auxiliary heating resource starting	nC1	No limitation (default)
		nC2	5 F (-15 C)
		nC3	15 F (-9 C)
		nC4	25 F (-4 C)
		nC5	35 F (2 C)
		nC6	45 F (7 C)
		nC7	55 F (13 C)
		nC8	65 F (18 C)

Pre-Start Check

- Make sure that the refrigerant pipe line and communication wire with the indoor and outdoor unit are connected to the same refrigeration system.
- Outdoor units require either 208/230-3-60 or 460-3-60 power. Verify that the power and phase requirements are correct and all three legs are present.
- Check that the power source's voltage is within 10% of the rated voltage.
- Check and confirm that the power and control wire are correctly connected.
- Check that the wired controllers are properly connected.
- Before powering on, check each line to confirm that there are no short circuits.
- Check that all units have passed a nitrogen pressure test for 24 hours.
- Provide the customer accurate "as-built" drawings and documents, including actual piping lengths and locations, unit addresses, settings, etc.
- Ensure additional refrigerant charge calculations are correct, and that the system is charged accordingly.
- Energize the outdoor units for at least 24 hours before system startup to ensure proper oil temperature has been achieved.
- Ensure all refrigerant valves on the outdoor units are fully open. Ensure the oil balancing valves are open for 2 and 3-module systems. If these valves are not fully open, equipment damage may occur.

MAINTENANCE

⚠ CAUTION

When servicing or repairing this unit, use only factory-approved service replacement parts. Refer to the rating plate on the unit for complete unit model number, serial number and company address. Any substitution of parts or controls not approved by the factory will be at the owner's risk and may result in equipment damage.

⚠ CAUTION

To avoid equipment damage, do not attempt to reuse any mechanical or electrical controllers that have been wet. Replace defective controller.

The following are recommended guidelines. Job site conditions may dictate that the maintenance schedule be performed more often than recommended here.

EVERY 3 MONTHS:

- Check the coil condition. Clean the coil if necessary.

EVERY 6 MONTHS:

Follow the 3-month maintenance schedule. In addition:

- Check for and remove debris that may have settled around the base of the outdoor unit.
- Check for proper condensate drainage (clear basepan).
- Eliminate any standing water inside the outdoor unit.

EVERY 12 MONTHS:

Follow 6-month maintenance schedule. In addition:

- Ensure all electrical connections are secure.
- Check the heating and cooling action to confirm proper operation.

© Carrier Corporation 2017