Installation and Maintenance Instructions

CONTENTS

Page
SAFETY CONSIDERATIONS 1
GENERAL 2
INSTALLATION 5
Step 1 — Unpack and Inspect Units 5
Step 2 — Position the Unit 5
Step 3 — Mount the Unit 6
Step 4 — Connect Piping 6
Step 5 — Install the Air Filter 7
Step 6 — Complete Electrical Connections 7
Step 7 — Install the LED Display Panel 9
Step 8 — Position and Connect Controller 9
ACB (Auxiliary Control Board) Interface 13
START-UP 13
Pre-Start Check 13
System Operation Check 13
MAINTENANCE 13
INDOOR UNIT ADDRESSING 13
Wireless Remote Controller (40VM900001) 13
Non-Programmable Controller 14
Programmable Controller 14
TROUBLESHOOTING 15
Replacement Parts 16
APPENDIX A — DIP SWITCH SETTINGS 17

SAFETY CONSIDERATIONS

Improper installation, adjustment, alteration, service, maintenance, or use can cause explosion, fire, electrical shock, or other conditions that may cause death, personal injury or property damage. The qualified installer or agency must use factory-authorized kits or accessories when modifying this product.

Follow all safety codes. Wear safety glasses, protective clothing, and work gloves. Use quenching cloth for brazing operations. Have fire extinguisher available. Read these instructions thoroughly and follow all warnings or cautions included in literature and attached to the unit. Consult local building codes and the current editions of the National Electrical Code (NEC) ANSI/NFPA (American National Standards Institute/National Fire Protection Association) 70. In Canada, refer to the current editions of the Canadian Electrical Code CSA (Canadian Standards Association) C22.1.

Understand the signal words — **DANGER**, **WARNING**, and **CAUTION**. **DANGER** identifies the most serious hazards, which will result in severe personal injury or death. **WARNING** signifies hazards that could result in personal injury or death. **CAUTION** is used to identify unsafe practices, which would result in minor personal injury or product and property damage.

Recognize safety information. This is the safety-alert symbol (⚠). When this symbol is displayed on the unit and in instructions or manuals, be alert to the potential for personal injury. Installing, starting up, and servicing equipment can be hazardous due to system pressure, electrical components, and equipment location.

⚠ WARNING

Electrical shock can cause personal injury and death. Shut off all power to this equipment during installation. There may be more than one disconnect switch. Tag all disconnect locations to alert others not to restore power until work is completed.

⚠ WARNING

When installing the equipment in a small space, provide adequate measures to avoid refrigerant concentration exceeding safety limits due to refrigerant leak. In case of refrigerant leak during installation, ventilate the space immediately. Failure to follow this procedure may lead to personal injury.

⚠ WARNING

DO NOT USE TORCH to remove any component. System contains oil and refrigerant under pressure.

To remove a component, wear protective gloves and goggles and proceed as follows:

a. Shut off electrical power to unit.
b. Recover refrigerant to relieve all pressure from system using high-pressure and low pressure ports.
c. Traces of vapor should be displaced with nitrogen and work area should be well ventilated. Refrigerant in contact with an open flame produces toxic gases.
d. Cut component connection tubing with tubing cutter and remove component from unit. Use a pan to catch any oil that may come out of the lines and as a gage for how much oil to add to the system.
e. Carefully unsweat remaining tubing stubs when necessary. Oil can ignite when exposed to torch flame.

Failure to follow these procedures may result in personal injury or death.

Manufacturer reserves the right to discontinue, or change at any time, specifications or designs without notice and without incurring obligations.

⚠ CAUTION

DO NOT re-use compressor oil or any oil that has been exposed to the atmosphere. Dispose of oil per local codes and regulations. DO NOT leave refrigerant system open to air any longer than the actual time required to service the equipment. Seal circuits being serviced and charge with dry nitrogen to prevent oil contamination when timely repairs cannot be completed. Failure to follow these procedures may result in damage to equipment. For information about replacement oil type and viscosity, see the Installation, Start-Up, and Service Instructions for the 38VMAH and 38VMAR outdoor units.

GENERAL

The 40VMR recessed floor console unit provides an efficient way to heat or cool a space. The equipment is initially protected under the manufacturer's standard warranty; however, the warranty is provided under the condition that the steps outlined in this manual for initial inspection, proper installation, regular periodic maintenance, and everyday operation of the unit be followed in detail. This manual should be fully re-viewed in advance before initial installation, start-up and any maintenance. Contact your local sales representative or the factory with any questions BEFORE proceeding.

Table 1 lists physical data for each unit size. See Fig. 1 for model number nomenclature. Figure 2 shows unit dimensions. Table 2 shows components that may or may not be used for a particular installation.

Table 1 — 40VMR Physical Data

UNIT 40VMR	007	009	012	015	018	024
POWER SUPPLY (V-Ph-Hz)	208/230-1-60					
COOLING CAPACITY (Btuh)	7,000	9,000	12,000	15,000	18,000	24,000
HEATING CAPACITY (Btuh)	8,000	10,000	13,500	17,000	20,000	27,000
INDOOR FAN MOTOR	DC					
Type						
Input (W)	19		25	41	27	79
INDOOR COIL						
Number of Rows	2		3		2	
Fin Spacing (fins/in.)	15					
Fin Type	Hydrophilic Aluminum					
Tube Diameter, OD (in.)	3/8					
Tube Type	Inner Groove					
Number of Circuits	3				4	
INDOOR AIRFLOW (cfm)						
Low	253		271	247	365	553
Medium	276		335	424	418	635
High	300		400	500	488	776
INDOOR NOISE LEVEL (dBA)						
Low	35.7	35.8	32.5	36.8	32.8	42.5
Medium	38.2	37.9	36.3	41.7	35.5	45.2
High	39.9	39.8	40.3	45.3	39	49.9
UNIT						
Unit Dimensions, W x H x D (in.)	35-1/4 x 24 x 8-3/8		43-1/8 x 24 x 8-3/8		54-5/16 x 24 x 8-3/8	
Packing Dimensions, W x H x D (in.)	44 11/16 x 10-3/16 x 26-3/4		52-9/16 x 10-3/16 x 26-3/4		64-3/8 x 10-13/16 x 26- 3/4	
Net/Gross Weight (lb)	48.9/80		59.1/91.5		69.2/102.1	
REFRIGERANT TYPE	R-410A					
EXPANSION DEVICE	EEV					
DESIGN PRESSURE, High/Low (psig)	580/320					
REFRIGERANT PIPING (in.)						
Liquid Side, OD	1/4				3/8	
Suction Side, OD	1/2				5/8	
CONNECTING WIRING						
Power Wiring	Sized per NEC and Local Codes Based on Nameplate Electrical Data					
Signal Wiring	2-core stranded shielded cable 18 AWG					
CONDENSATE DRAIN PIPE DIAMETER, OD (in.)	5/8					

LEGEND
AWG — American Wire Gage
EEV — Electronic Expansion Valve
NEC — National Electrical Code

40 VM R 007 --- 3

Equipment Type
40 — Indoor Unit

Product Type
VM — VRF

Model Type
R — Floor Console Recessed

Capacity (Btuh)
007 — 7,000 **015** — 15,000
009 — 9,000 **018** — 18,000
012 — 12,000 **024** — 24,000

Blank

Voltage (V-Ph-Hz)
3 — 208/230-1-60

LEGEND
ESP — External Static Pressure
SP — Static Pressure

Fig. 1 — Model Number Nomenclature

Table 2 —Components Shipped With Unit

NAME OF ACCESSORY	OUTLINE	QUANTITY	USAGE
Foot mounting bolt		4	For connecting the feet to the bottom of the unit
Pipe insulation material		2	Heat insulation
LED display panel		1	Operation and error display
Mounting feet		2	Supports unit in floor-mounted applications
Copper nut		1	Use for pipe connection
PQE connection wire		2	Connect outdoor unit, indoor unit, and sub MDC
Connecting wire	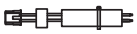	1	For occupancy sensor

LEGEND
MDC — Multiport Distribution Controller

DIMENSIONS

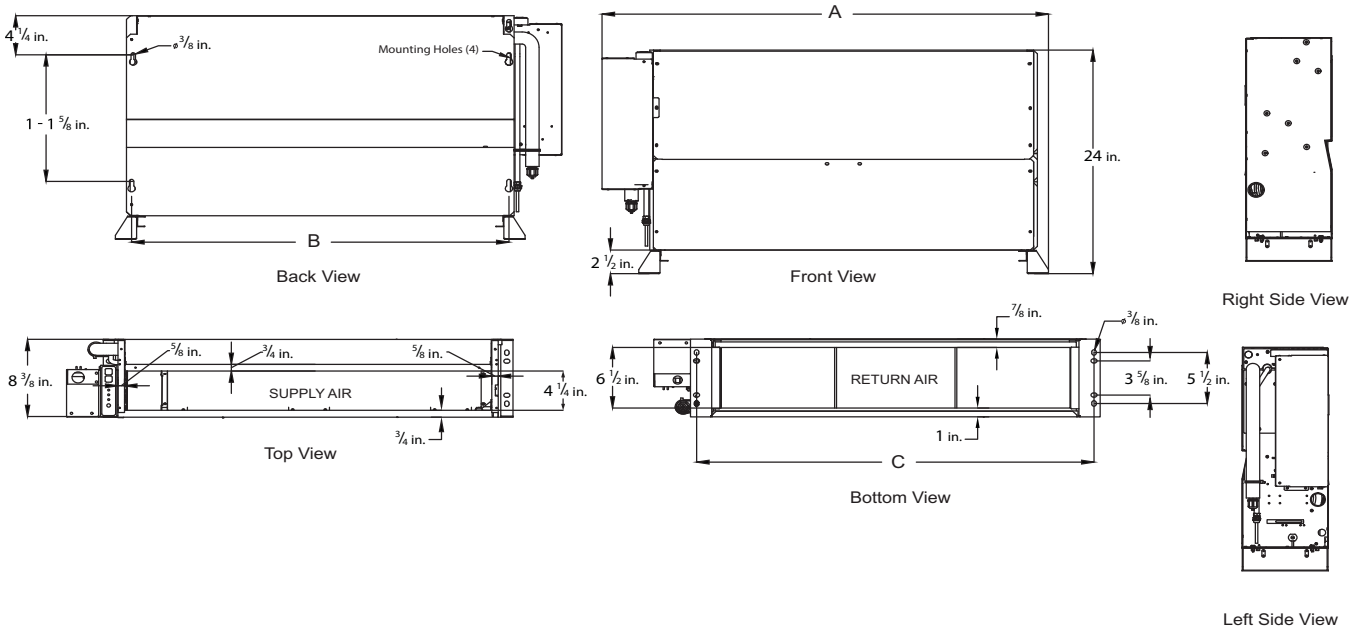

40VMR UNIT SIZE	DIMENSION (in.)		
	A	B	C
007,009	35-1/4	28-9/16	30-1/2
015,018	43-1/8	36-7/16	38-3/8
018,024	54-5/16	48-1/4	50-3/16

NOTE: All dimensions shown in inches.

Fig. 2 —40VMR007-024 Dimensions

INSTALLATION

Step 1 — Unpack and Inspect Units — Units are packaged for shipment to avoid damage during normal transit and handling. It is the receiving party's responsibility to inspect the equipment upon arrival. Any obvious damage to the carton and/or its contents should be reported on the bill of lading and a claim should be filed with the transportation company and the factory. The unit should always be stored in a dry place and in the proper orientation as marked on the carton.

⚠ CAUTION

To avoid equipment damage, do not lift unit by the drain pipe or refrigerant piping. Unit should be lifted using the mounting brackets.

After determining the condition of the carton exterior, carefully remove each unit from the carton and inspect for damage. Check to make sure that items such as accessory kit, thermostats, controller, etc. are accounted for whether packaged separately or shipped at a later date. Any damage should be recorded, a claim should be filed with the transportation company, and the factory should be notified. In the event a claim for shipping damage is filed, the unit, shipping carton, and all packing must be retained for physical inspection by the transportation company. All units should be stored in the factory shipping carton with internal packaging in place until installation.

PROTECTING UNITS FROM DAMAGE Do not apply force or pressure to the coil, piping, or drain stub-outs during handling. All units should be handled by the chassis or as close as possible to the unit mounting point locations.

The unit must always be properly supported. Temporary supports used during installation or service must be adequate to hold the unit securely. To maintain warranty, protect units against hostile environments (such as rain, snow, or extreme temperature), theft, vandalism, and debris on the jobsite. Equipment covered in this manual is not suitable for outdoor installations. Do not allow foreign material to fall into drain pan. Prevent dust and debris from being deposited on motor, fan wheels, and coils. Failure to do so may have serious adverse effects on unit operation, and in the case of motor and blower assembly, may result in immediate or premature failure. Failure of any unit caused by deposits of foreign material on the motor or blower wheels will not be covered by the manufacturer's warranty. Some units and/or job conditions may require some form of temporary covering during construction.

PREPARING JOBSITE FOR UNIT INSTALLATION To save time and to reduce the possibility of costly errors, set up a complete sample installation in a typical room at the job-site. Check all critical dimensions such as pipe, wire, and duct connections requirements. Refer to job drawings and product dimension drawings as required. Instruct all trades in their parts of the installation. Units must be installed in compliance with all applicable local code requirements.

IDENTIFYING AND PREPARING UNITS Be sure power requirements match available power source. Refer to the unit nameplate and wiring diagram.

In addition:

- Check all tags on the unit to determine if shipping screws are to be removed. Remove screws as directed.
- Rotate the fan wheel by hand to ensure that the fan can rotate freely. Check for shipping damage and fan obstructions. Adjust blower motor as required.

Step 2 — Position the Unit

⚠ DANGER

Units must not be installed where they may be exposed to potentially explosive or flammable atmosphere. If this instruction is not followed, a fire or explosion may result, causing property damage, injury, or loss of life.

Select the unit position with the following points in mind:

- The unit should be installed on wall studs or floor supports that are strong enough to support the total weight of the unit, refrigerant piping, and condensate piping.
- Proper clearance should be provided on the side and top as shown in Fig. 3 for wall mounted units and Fig. 4 for floor mounted units.

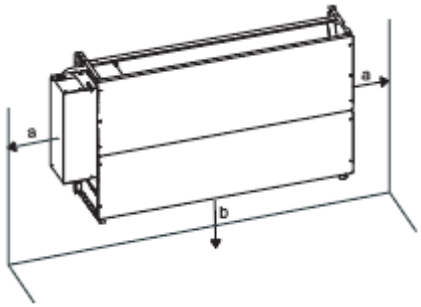

DIMENSIONS (in.)	
a	b
≥ 8	≥ 2-1/2

Fig. 3 —Required Clearances for Wall Mounted Units

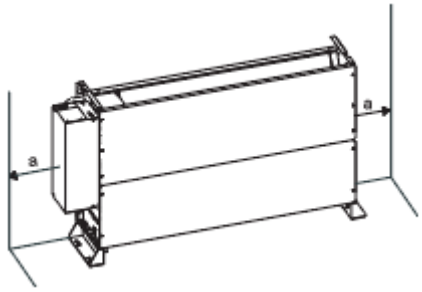

DIMENSION (in.)
a
≥ 8

Fig. 4 —Required Clearances for Floor Mounted Units

- The unit should not be positioned directly above any obstruction.
- The unit must be installed square and level.
- The condensate drain should have sufficient downward slope in the condensate flow direction.

Step 3 — Mount the Unit

⚠ CAUTION

When determining the unit mounting location, make sure that there are no water, plumbing, or electrical lines running through the wall. Failure to follow this instruction may result in property damage.

FOR WALL-MOUNT APPLICATIONS — The unit will be hung by 4 mounting holes on the back of the unit. Install the 4 mounting screws into wall studs for hanging the unit according to mounting hole locations, see Fig. 5. Ensure that the connections and wall studs can support the weight of the unit and its piping, wiring, and ductwork. Hang the unit on the 4 mounting bolts, and ensure that the bolts are tightened securely.

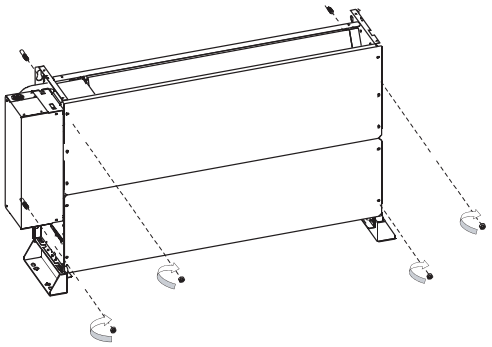

Fig. 5 —Installing Wall Mounting Screws

FOR FLOOR-MOUNT APPLICATIONS — The unit will be secured by its mounting feet. Attach the mounting feet to the unit using the 4 bolts provided. Secure the unit to the floor using at least 4 bolts (2 per side) in the 8 mounting feet holes provided, see Fig. 6.

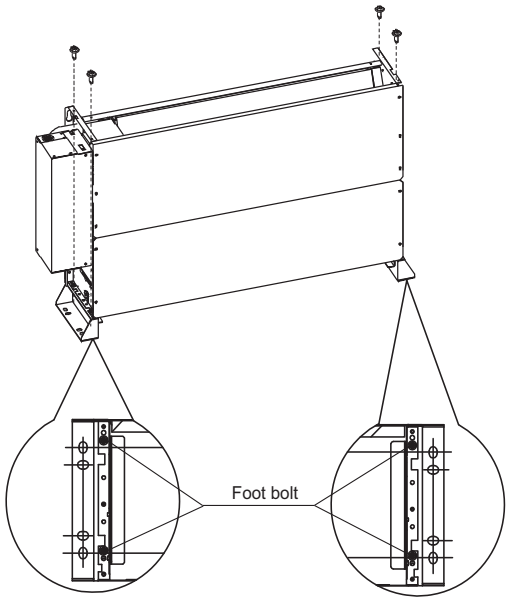

Fig. 6 —Installing Mounting Feet and Mounting to Floor

Step 4 — Connect Piping

CONDENSATE PIPING — The unit has a factory-installed condensate drain hose. Attach the flexible connector on the end of the drain hose to field drain piping. Refer to Fig. 7 below for inside and outside diameters of the flexible connector..

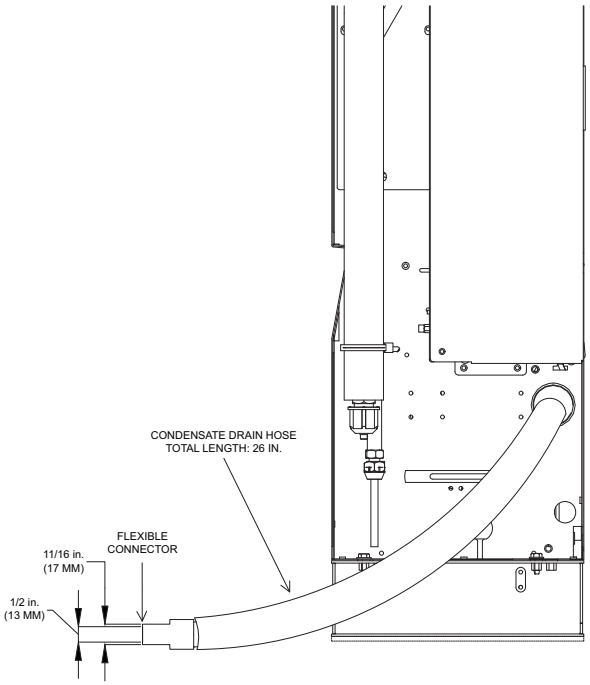

Fig. 7 —Condensate Piping

REFRIGERANT PIPING

⚠ CAUTION

When connecting from an indoor unit to an outdoor unit, the isolation valve at the outdoor unit should be in the closed position throughout the refrigerant piping process. Failure to follow this procedure may result in equipment damage.

When connecting refrigerant piping from an indoor unit to an outdoor unit, follow these guidelines:

- Check maximum height drop and length of refrigerant piping between the indoor and outdoor units. If the difference between them is more than 33 ft, consider mounting the outdoor unit above indoor unit.
- Refrigerant piping connection between indoor and outdoor units should be performed once the units are secured at their respective installation locations.
- The refrigeration piping starts at the indoor unit and ends at the outdoor unit.
- The number of bends in the refrigeration piping must be fewer than 15.
- The refrigerant piping should be dry and free of dust and other impurities.
- The bending angle of the refrigerant pipe should not exceed 90° and the bending radius should be as large as possible to prevent any breakage in piping.
- Use proper cutting and flaring tools to avoid leakage.
- Use a torque wrench for flare nuts. Refer to Table 3 for flare nut torque recommendations

Table 3 — Flare Nut Torque Recommendations

OUTSIDE DIAMETER (IN.)	RECOMMENDED TORQUE (FT-LB)
1/4	15
3/8	26
1/2	41
5/8	48

- Before insulating the suction and liquid refrigeration pipes, perform pressure and leak tests. For details, see the outdoor unit installation manual. Insulating both suction and liquid refrigerant pipes is mandatory.
- Vacuuming and charging of the system should be carried out as described in the outdoor unit installation manual.

Step 5 — Install the Air Filter

The unit has an adjustable air filter rack on the bottom of the unit. There are screws on the filter rack that allow it to be adjusted for nominal filter sizes of 1/2 in. to 2 in., see Fig. 8. Adjust filter rack to filter size, and then slide filter into the rack from the front.

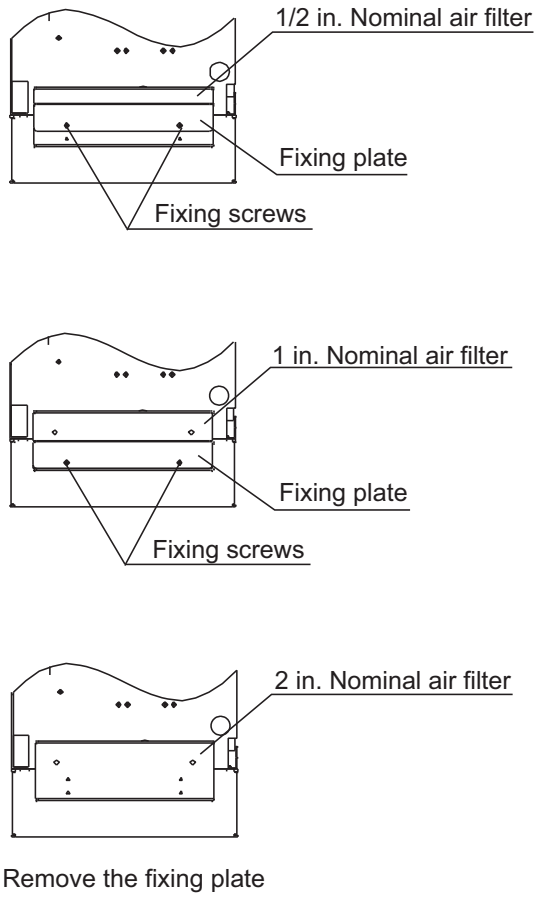

Fig. 8 —Adjusting the Filter Rack

STATIC PRESSURE SETTINGS FOR FILTER — There are four static pressure settings available to accommodate filter pressure drop:

- 0.00 in. wg
- 0.04 in. wg
- 0.08 in. wg
- 0.12 in. wg

Refer to Wired Controller manual for details on static pressure settings.

Step 6 — Complete Electrical Connections —

Installation of wiring must conform with local building codes and with National Electric Code ANSI/NFPA 70 (current editions). Units must be electrically grounded in conformance with the code. In Canada, wiring must comply with CSA C22.1, Electrical Code.

⚠ WARNING

Electrical shock can cause personal injury and death. Disconnect the power supply before making wiring connections. There may be more than one disconnect switch. Tag all disconnect locations to alert others not to restore power until work is completed.

⚠ WARNING

All units must be wired strictly in accordance with the wiring diagram supplied with the unit. Any wiring different from the wiring diagram could result in personal injury and property damage.

⚠ CAUTION

Any original factory wiring that requires replacement must be replaced with wiring material having a temperature rating of at least 105°C.

Ensure supply voltage to the unit, as indicated on the serial plate, is not more than 10% over or under the rated voltage.

Failure to follow these recommendations may result in equipment damage.

This equipment in its standard form is designed for an electrical supply of 208/230-1-60. Any damage to or failure of units caused by incorrect wiring or voltage is not covered by the warranty.

Electric wiring must be sized to carry the full load amp draw of the motor, starter, and any other controls that are used with the unit. See Table 4 for electrical data.

Table 4 — 40VMR Electrical Data

40VMR UNIT SIZE	POWER SUPPLY	
	MCA	MOPD
007	0.55	15
009	0.55	15
012	0.63	15
015	0.83	15
018	0.72	15
024	1.38	15

LEGEND
MCA — Minimum Circuit Amps
MOPD — Maximum Overcurrent Protective Device

After the pipe work is complete, the electrical supply can be connected by routing the cable through the appropriate casing holes or knockouts and connecting the supply and ground cables to the unit's power terminal.

Be sure the power wiring and control wiring do not cross. This might cause disturbance on the controls side. See Fig. 9 for wiring diagrams.

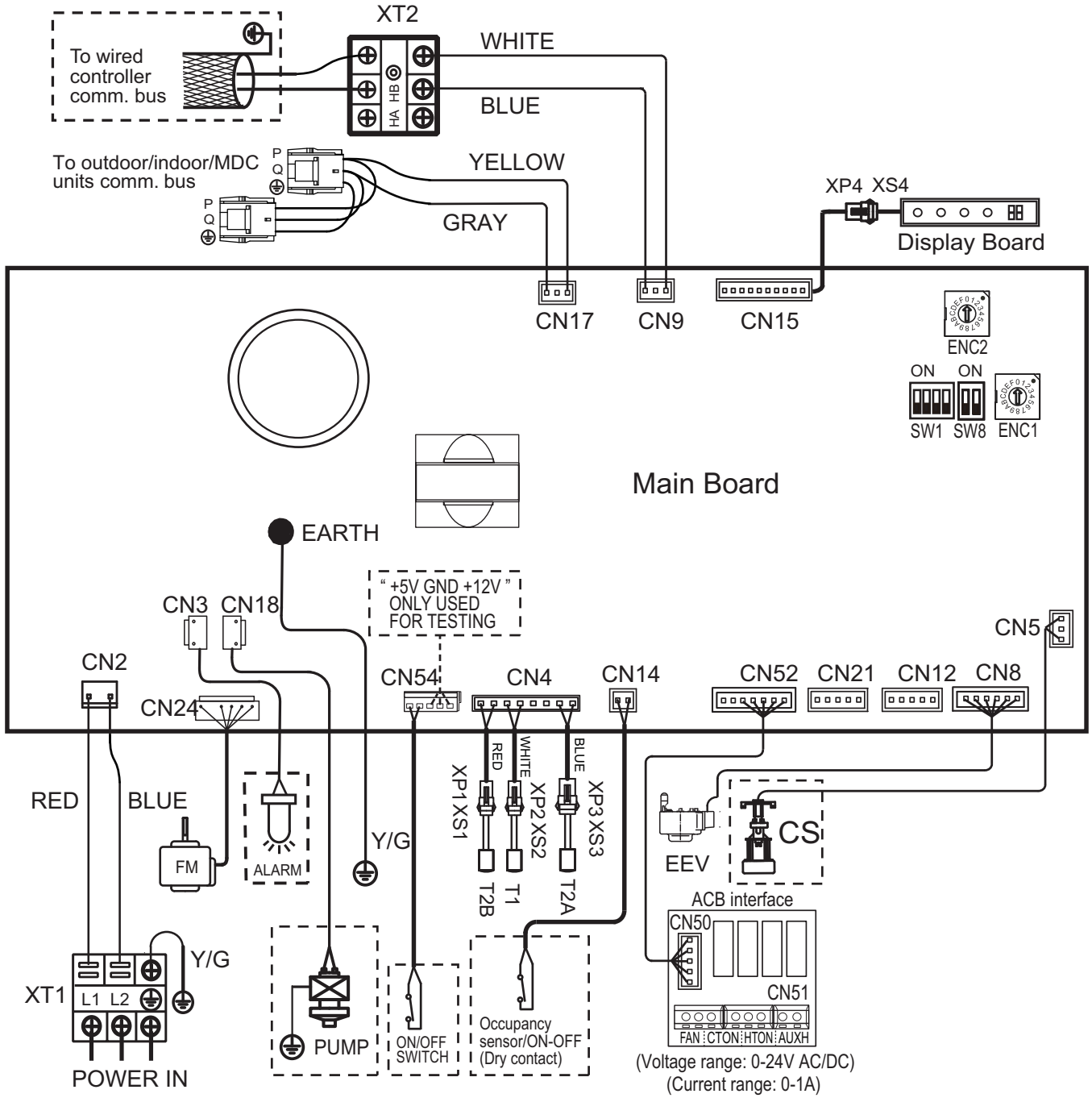

LEGEND

ACB	—	Auxiliary Control Board
ALARM	—	Warning Lamp (Optional)
AUXH	—	Output for Auxiliary Heat
CS	—	Condensate Switch (Optional)
CTON	—	Output for Cooling Operation
EEV	—	Electronic Expansion Valve
FAN	—	Output for Fan Operation
FM	—	Indoor Fan Motor
HTON	—	Output for Heating Operation
MDC	—	Multiport Distribution Controller
PUMP	—	Pump Motor (Optional)
T1	—	Room Temp. Sensor
T2A	—	Inlet Pipe Temp. Sensor
T2B	—	Outlet Pipe Temp. Sensor
XP1-4/XS1-6	—	Connectors
XT1-1	—	Terminal Block

Fig. 9 —40VMR007-024 Typical Wiring Diagram

POWER WIRING — Wiring connections are made inside the control box located on the left side of the unit. Refer to Fig. 10 for power wiring terminal connections.

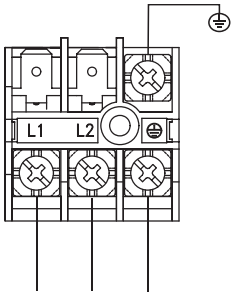

Fig. 10 —Power Wiring Terminals

Step 7 — Installing the LED Display Panel —

The display panel has buckles on the bottom that are used to secure it to the control box, see Fig. 11.

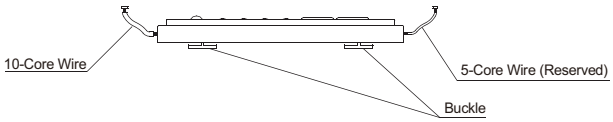

Fig. 11 —LED Display Panel

Insert the buckles into the grooves in the electronic control box as shown in Fig. 12.

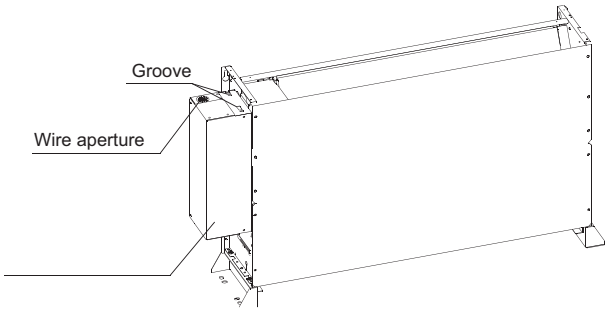

Fig. 12 —LED Display Panel Installation Location

Slide the panel in the direction of the arrow as indicated in Fig. 13 to secure it.

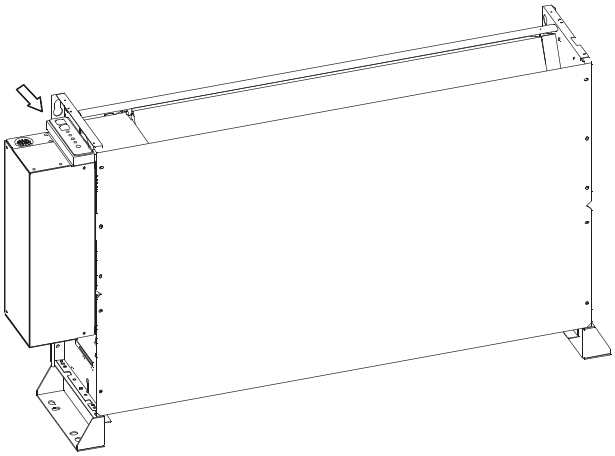

Fig. 13 —LED Display Panel Installed

Step 8 — Position and Connect Controller —

NOTE: Controllers are ordered separately.

Wired controllers should be installed in a position that maintains good temperature control:

- Position the thermostat approximately 48 inches above floor level.
- Do not position the thermostat where it can be directly affected by the unit's discharge airstream.
- Avoid external walls and drafts from windows and doors.
- Avoid positioning near shelves and curtains as these restrict air movement.
- Avoid heat sources such as direct sunlight, heaters, dimmer switches, and other electrical devices.

CONTROL WIRING

1. The communication wire should be 2-core stranded shielded cable.
2. For indoor and outdoor unit communication, use P, Q terminals. Shielded core should be used for ground.
3. Wiring should be run according to the wiring diagram.
4. Communication wire must not form a closed loop.
5. Use separate conduit for power and control wiring.
6. See Fig. 14 and Fig. 15.

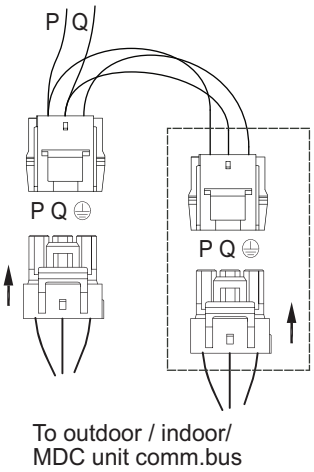

Fig. 14 —Communication Wire Connection

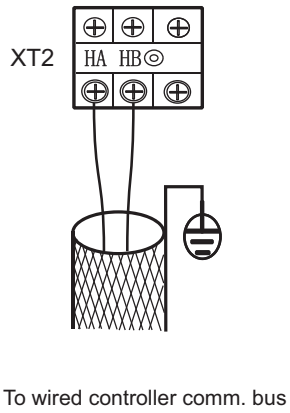

Fig. 15 —Wired Controller Connection

OPTION/EXTENSIONS OF COMMUNICATION WIRING — To extend control wiring or to make terminal connections, use the PQE connection wire supplied in the accessory kit and follow the steps below.

1. Cut the connector on the outdoor unit side as shown in Fig. 16.

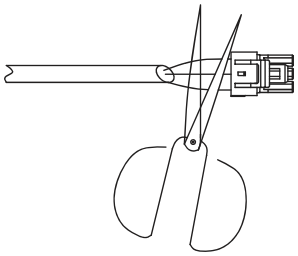

Fig. 16 — Shearing Outdoor Connector

2. Strip a suitable length of the insulation layer as shown in Fig. 17.

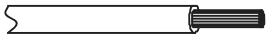

Fig. 17 —Stripping The Wire

3. Use a suitable screwdriver to fix the communication wire on the outdoor unit communication terminal as shown in Fig. 18.

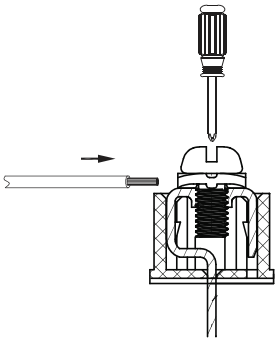

Fig. 18 — Connecting Communication Wire to Outdoor Unit Communication Terminal

If communication wires are used to connect between indoor units, find the corresponding port and plug it in directly as shown in Fig. 19.

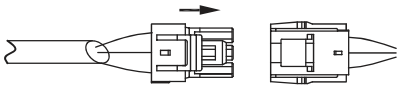

Fig. 19 —Connecting the Communication Wires

If it is not possible to buy communication wires from Carrier, connect the indoor unit side of communication wires using the connector provided with the accessories as shown in Fig. 20. See Fig. 21 and 22 for typical communication wiring of the heat pump and the heat recovery systems.

⚠ CAUTION

Failure to follow these procedures may result in personal injury or damage to equipment.

NEVER CONNECT the main power source to the control or communication terminal block.

USE AN APPROPRIATE SCREWDRIVER for tightening the terminal screws. Do not over tighten the terminal screws.

IMPORTANT: Wiring for communication shall be two inches or more apart from power source wiring to avoid electric noise. Do not insert control/communication and power source wire in the same conduit.

Pay attention to polarity of the communication wire.

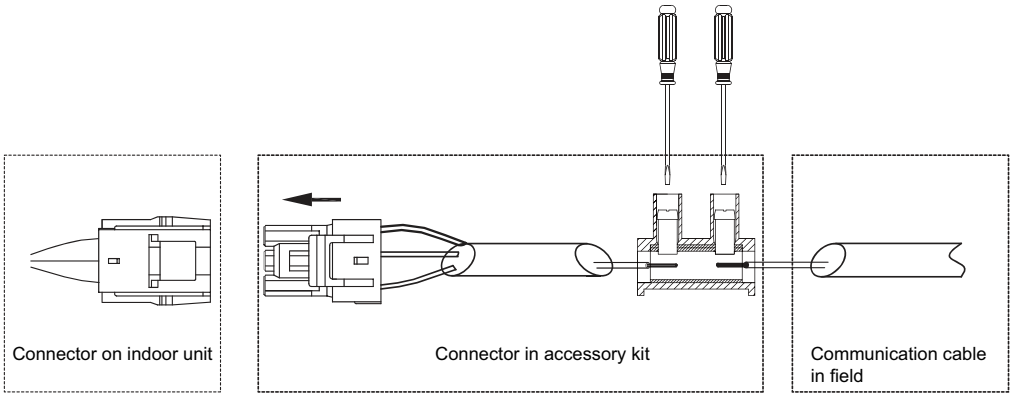

Fig. 20 —Connecting the Communication Cable (Indoor Unit to Outdoor Unit) Using the Supplied Connector

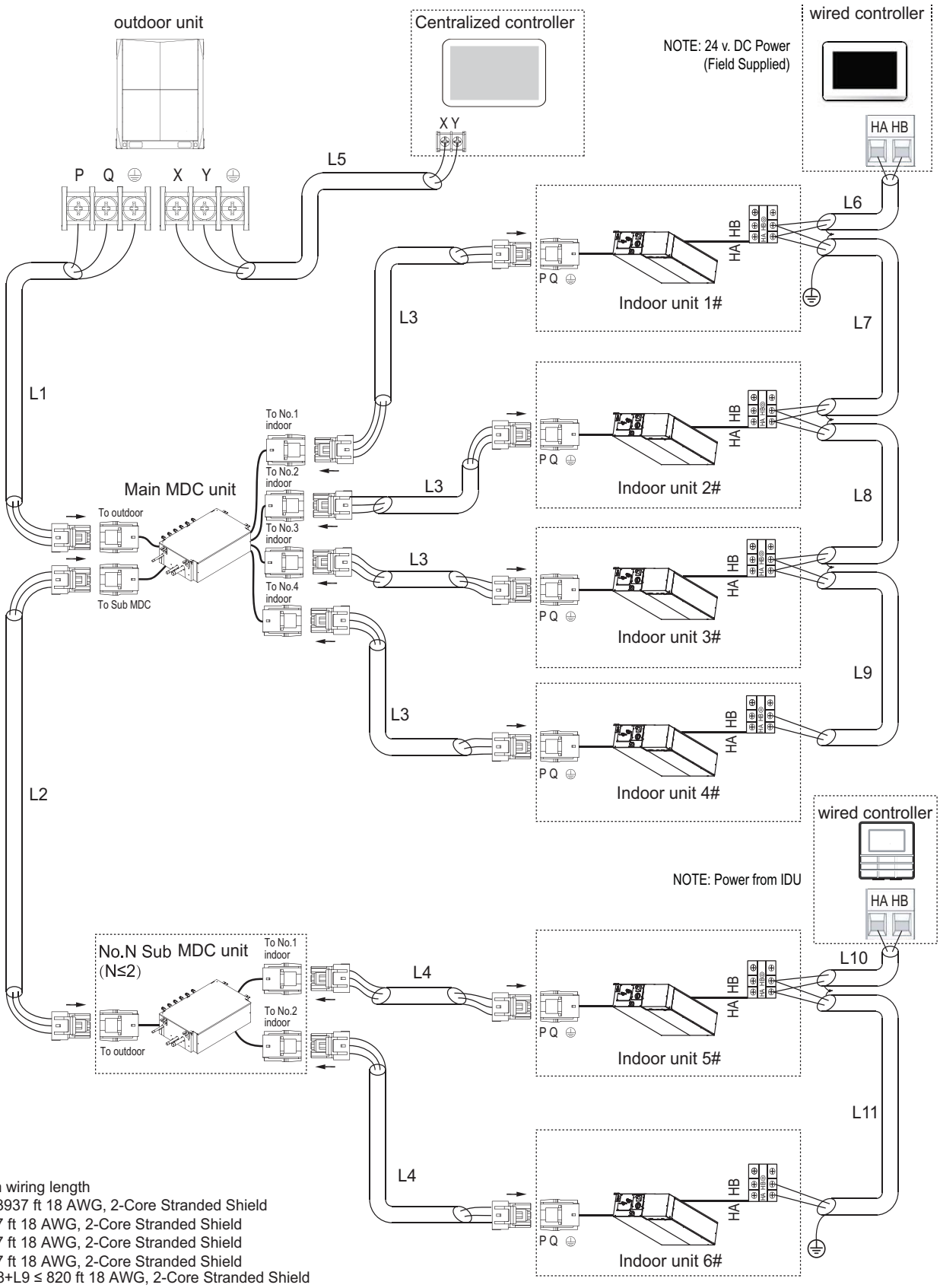

Maximum wiring length
L1+L2 ≤ 3937 ft 18 AWG, 2-Core Stranded Shield
L3 ≤ 3937 ft 18 AWG, 2-Core Stranded Shield
L4 ≤ 3937 ft 18 AWG, 2-Core Stranded Shield
L5 ≤ 3937 ft 18 AWG, 2-Core Stranded Shield
L6+L7+L8+L9 ≤ 820 ft 18 AWG, 2-Core Stranded Shield
L10+L11 ≤ 820 ft 18 AWG, 2-Core Stranded Shield

LEGEND
AWG — American Wire Gage
IDU — Indoor Unit
MDC — Multiport Distribution Controller

Fig. 21 —Typical Communication Wiring of Heat Recovery System

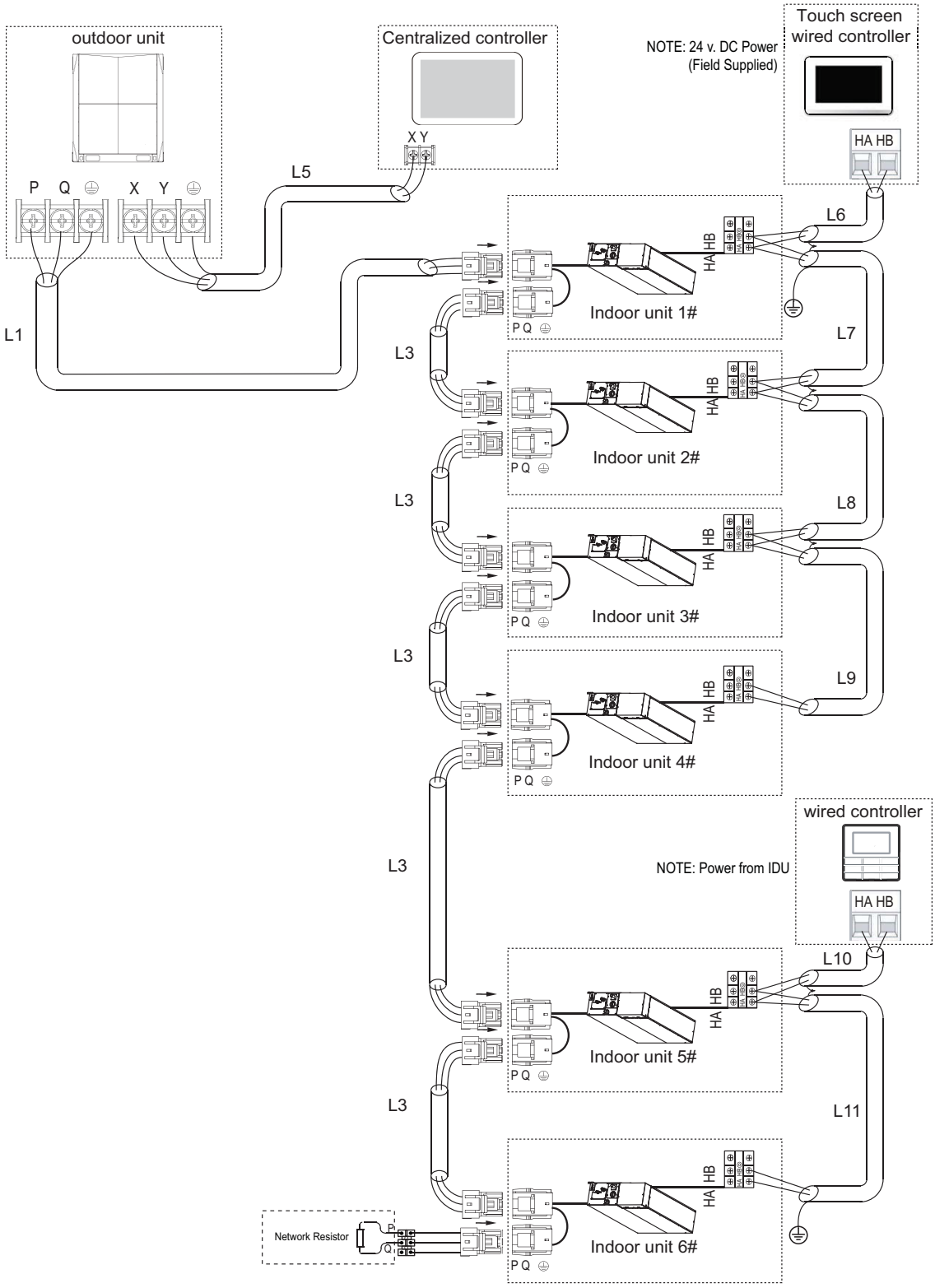

Maximum wiring length
L1+L3 ≤ 3937 ft 18 AWG, 2-Core Stranded Shield
L5 ≤ 3937 ft 18 AWG, 2-Core Stranded Shield
L6+L7+L8+L9 ≤ 820 ft 18 AWG, 2-Core Stranded Shield
L10+L11 ≤ 820 ft 18 AWG, 2-Core Stranded Shield

LEGEND
AWG — American Wire Gage
IDU — Indoor Unit

NOTE: Network resistor is shipped with the outdoor unit for field installation on heat pump systems.

Fig. 22 — Typical Communication Wiring of Heat Pump System

ACB (Auxiliary Control Board) Interface — The ACB interface is a dry contact board that can output up to four signal controlling devices. Refer to Fig. 23 for connecting devices to the ACB interface board

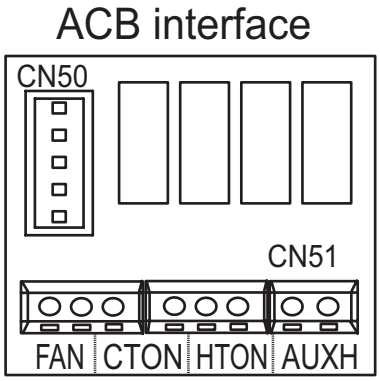

MAX AMPS	1A
MAX VOLTAGE	24V

LEGEND

ACB	– Auxiliary Control Board
FAN	– Output for fan Operation
CTON	– Output for Cooling Operation
HTON	– Output for Heating Operation
AUXH	– Output for Auxiliary Heat

Fig. 23 —ACB Interface

START-UP

Pre-Start Check — Once installation is complete, make the following pre-start checks:

1. All indoor and outdoor units are properly installed.
2. All piping and insulation is complete.
3. All electrical connections (both power and control) are properly terminated.
4. All condensate drains are installed correctly.
5. The power supply is the right voltage and frequency.
6. The units are properly grounded in accordance with current electrical codes.
7. Suction and liquid line service valves are in the open position.

System Operation Check — Once the installation and pre-start checks are complete, perform the following steps:

1. Using the remote controller, select cooling or heating mode to check the operation of the system.
2. While the system is in operation, check the following on the indoor unit:
   a. Switches or buttons on the remote controller are easy to push.
   b. Indicator light is showing normal operation and no error is indicated.
   c. Swing mode of air louvers is working (if applicable to unit).
   d. Drain pump operation is normal (if applicable).
   e. No abnormal vibration or noise.
3. While the system is in operation, check the following on the outdoor unit:
   a. No abnormal vibration or noise is noticed.
   b. Condenser fan is in operation.
   c. Indicator light is showing normal operation and no error is indicated.

NOTE: If the unit is turned off or restarted, there is a time delay of three minutes for the compressor to start from the time the power is restored.

MAINTENANCE

⚠ CAUTION

When servicing or repairing this unit, use only factory-approved service replacement parts. Refer to the rating plate on the unit for complete unit model number, serial number, and company address. Any substitution of parts or controls not approved by the factory will be at the owner's risk and may result in equipment damage.

⚠ CAUTION

To avoid equipment damage, do not attempt to reuse any mechanical or electrical controllers that have been wet. Replace defective controller.

EVERY 3 MONTHS:

- Check the air filter condition. Clean or replace if necessary.

EVERY 6 MONTHS:

Follow the 3-month maintenance schedule. In addition:

- Clean condensate tray with suitable cleaning agent.
- Clean the grille and panel.

EVERY 12 MONTHS:

Follow the 6-month maintenance schedule. In addition:

- Be sure all electrical connections are secure.
- Check condensate pump operation.
- Check the heating and cooling action to confirm proper operation.

INDOOR UNIT ADDRESSING

For proper system operation, each indoor unit must have a unique address set from 0 to 63. When setting an address by remote controller, the outdoor units, indoor units, and MDC must be powered on. If **FE** is displayed on the LED screen or display board, this unit has no address. After setting all indoor unit addresses, turn off the power supply to all indoor units to clear the errors.

Indoor unit addressing can be distributed automatically in the heat pump system. When dip switch "S6" on the outdoor unit's main PCB board is set to 00 (default set in factory), indoor units are set for auto-addressing. When powering on for the first time, it takes six minutes or more to finish auto-addressing each indoor unit. The heat recovery system cannot accomplish this function at this time.

Wireless Remote Controller (40VM900001) — Indoor unit addressing can be performed using the wireless remote controller. When using the wireless controller, the user must maintain a line of sight with the receiver on the indoor unit. See Fig. 24 for a description of the buttons on the wireless remote.

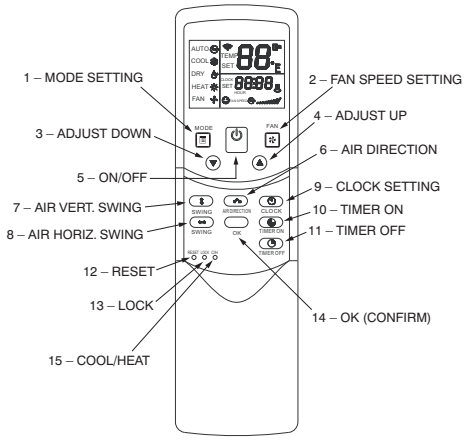

Fig. 24 —Wireless Remote Controller (40VM900001)

1. Use a tool to press and hold the LOCK button for at least ten seconds.
2. Press ⏻ to activate.
3. Click ▲ or ▼ to select an address and press FAN to send the setting.

To display an indoor unit address, use a tool to press and hold the LOCK button for at least ten seconds, and press MODE to query the addresses.

Non-Programmable Controller

When setting an address, connect only one wired controller to an indoor unit.

Press **ROOM TEMP** and **SWING** simultaneously for three seconds. If there is no address for this indoor unit, the display shows **FE# 00**. See Fig. 25. Otherwise, the display shows the current address of the indoor unit.

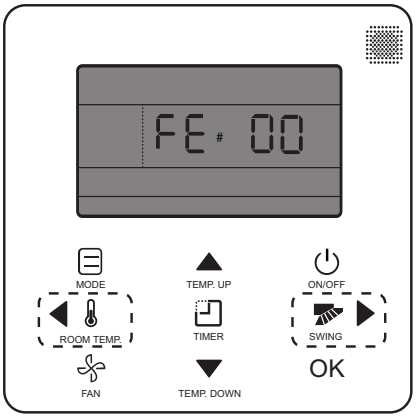

Fig. 25 —Non-Programmable Controller IDU Addressing Menu

Click **TEMP. UP** or **TEMP. DOWN** to change 00 to the desired address as shown in Fig. 26. Press **OK** to confirm and exit the setting interface

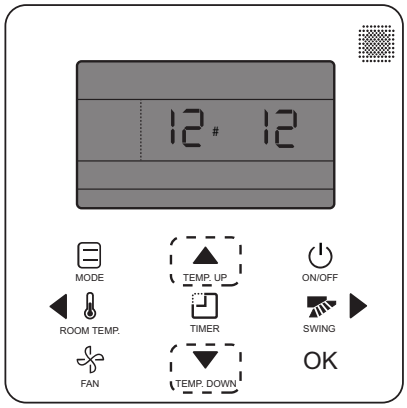

Fig. 26 —Non-Programmable Controller Setting IDU Address

Programmable Controller — When setting an address, connect only one wired controller to an indoor unit.

1. Press **FAN** and **BACK** simultaneously for five seconds to access parameter settings as shown in Fig. 27.

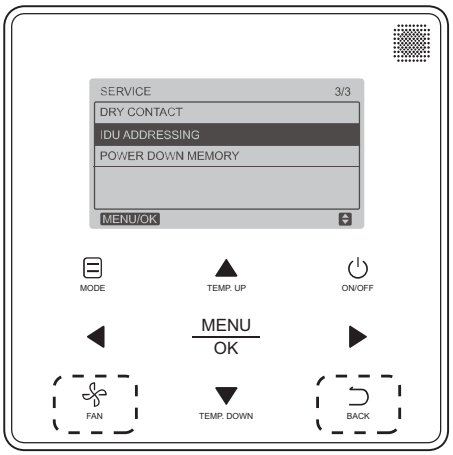

Fig. 27 —Programmable Controller IDU Addressing Menu

2. Press **TEMP. UP** or **TEMP. DOWN** to move the cursor and choose IDU ADDRESSING. Press **MENU/OK** to enter this setting.
3. Press **TEMP. UP** or **TEMP. DOWN** to choose the address you want to set as shown in Fig. 28. Press **MENU/OK** to send this address to the IDU.

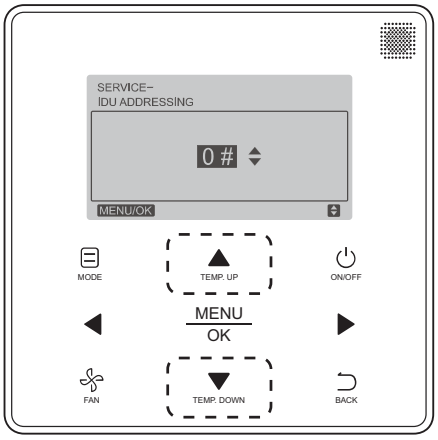

Fig. 28 —Programmable Controller Setting IDU Address

4. Press BACK twice or wait 30 seconds to automatically exit the parameter settings menu.

TROUBLESHOOTING

Figure 29 shows the LED display panel for 40VMR007-024 units. See Table 5 for a summary of display indicators. Table 6 lists problems, possible causes, and possible solutions.

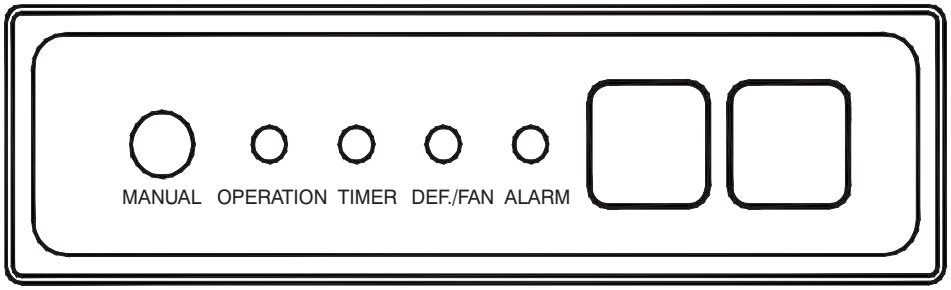

Fig. 29 — 40VMR Display Panel

Table 5 — Display Indicators

TYPE	LED DISPLAY	MODE/STATUS
[NO ERROR]	Setting Temperature	Starting
	"--"	Shutdown
	"--"	Standby
	"--"	Timing ON
	"--"	Timing OFF
	Setting Temperature	System Defrost ON
	Setting Temperature	System Defrost OFF
	Room Temperature	Only fan
ERROR	dd	Heating / Cooling Mode Conflict
	E1	Communication Error Between Indoor and Outdoor Unit
	E2	Check Indoor Temperature Sensor (T1)
	E4	Check Evaporator Outlet Temperature Sensor (T2B)
	E5	Check Evaporator Temperature Sensor (T2A)
	E6	Check DC Fan
	E7	EEPROM Error (Data Storage)
	E9	Communication Error Between Indoor Unit and Wired Controller
	Eb	EEV Error
	Ed	Outdoor Unit Error
	EE	Condensate Overflow
	FE	No Address When Power ON For First Time
	UU	MDC In Auto System-Check Mode

LEGEND
ACB — Auxiliary Control Board
EEPROM — Electronically Erasable Programmable Read-only Memory
EEV — Electronic Expansion Valve
MDC — Multiport Distribution Controller

Table 6 — Troubleshooting

DIGITAL DISPLAY	DESCRIPTION	POSSIBLE CAUSES	POSSIBLE SOLUTIONS
dd	Heating / Cooling Mode Conflict	System is in cooling or fan only mode and heating signal is received from a unit on the system.	All units should be in cooling mode for system to stay in cooling mode.
		System is in heating mode and cooling signal is received from a unit in the system.	All units should be in heating mode.
E1	Communication Error Between Indoor & Outdoor Unit	Signal wires are short-circuited or disconnected.	Check or reconnect signal wire.
		Signal wire close to electromagnetic source.	Distance signal wires from electromagnetic source.
		PC board fault.	Replace PC board.
E2, E4, E5	Check Temperature Sensor	Loose connection at port on PC board.	Tighten the connection at port on PC board.
		Sensor is short-circuited.	Using multi-meter, measure resistance of the sensor. If the resistance is ≤ 100 ohms, change the sensor.
		PC board fault.	Replace PC board.
E6	DC Fan Motor	Operating beyond limits.	Check and correct external static pressure on the unit.
		DC motor fault.	Replace DC motor.
		PC board fault.	Replace PC board.
E7	EEPROM Error (Data Storage)	Chip or PC board fault.	Replace PC board.
E9	Communication Error Between Indoor Unit and Controller	Signal wires are short-circuited or disconnected.	Check or reconnect signal wires.
		Signal wires close to electromagnetic source.	Distance signal wires from electromagnetic source.
		PC board fault.	Replace PC board.
Eb	EEV Error	EEV wires are short-circuited or disconnected.	Check or reconnect signal wire.
		EEV stop.	Replace EEV.
		PC board fault.	Replace PC board.
Ed	Outdoor Unit Error	Outdoor unit fault.	Refer to outdoor unit troubleshooting guide.
EE	Condensate Error	Loose connection or disconnected at port on PC board.	Tighten the connection or reconnect at port on PC board.
		Condensate switch float is stuck.	Inspect the slope.
		Trap slope is too steep.	Adjust the trap slope.
		Drain pipe is too long.	Adjust the length of drain pipe.
		Drain pump faulty.	Replace the drain pump.
FE	No Address When Power ON for first time	Indoor unit without address.	Run automatic addressing option at the outdoor unit.
			Use remote wireless or wired controller to readdress indoor unit.
UU	MDC Auto System-Check Mode	MDC fault	Refer to MDC troubleshooting guide.

LEGEND
EEV — Electronic Expansion Valve
EEPROM — Electronically Erasable Programmable Read-only Memory
MDC — Multiport Distribution Controller
PC — Process Controller

Replacement Parts

Quote the unit model number and unit serial number when ordering replacement parts or contacting the factory about the unit. This information can be found on the serial plate attached to the unit. See Fig. 30.

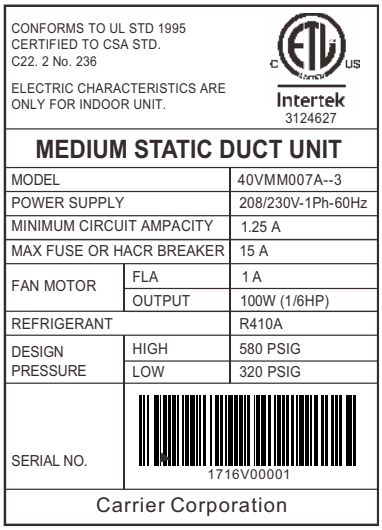

Fig. 30 —Unit Serial Plate (Example)

APPENDIX A — DIP SWITCH SETTINGS

There are two DIP switches on the main board. Figures A and B show the settings for each parameter controlled by a switch. Switches are shown in the default settings.

POSITION 1 — START-UP

OFF — Auto Addressing Mode (Default)
ON — Factory Test Mode

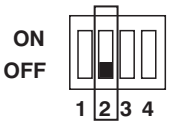

POSITION 2 — MODE

OFF — Normal Mode (default)
ON — Factory Self-Checking Mode

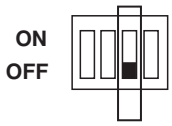

POSITION 3 — NOT USED

POSITION 4 — INDOOR UNIT IDENTIFICATION

OFF — Standard Indoor Unit (Default)
ON — Mode Priority Indoor Unit (HP only)
(IDU address must be 63)

Fig. A — SW1 Settings

POSITION 1, 2 — NOT USED

Fig. B —SW8 Settings

© Carrier Corporation 2020