Installation and Maintenance Instructions

CONTENTS

Page
SAFETY CONSIDERATIONS 1
GENERAL 2
INSTALLATION 5
Step 1 — Unpack and Inspect Units 5
Step 2 — Position the Unit 5
Step 3 — Mount the Unit 5
Step 4 — Connect Piping 6
Step 5 — Complete Electrical Connections 7
Step 6 — Position and Connect Controller 9
ACB (Auxiliary Control Board) Interface 13
START-UP 13
Pre-Start Check 13
System Operation Check 13
MAINTENANCE 13
INDOOR UNIT ADDRESSING 13
Wireless Remote Controller (40VM900001) 13
Non-Programmable Controller (40VM900002) . . . 14
Programmable Controller (40VM900003) 14
TROUBLESHOOTING 16
Replacement Parts 17
APPENDIX A — DIP SWITCH SETTINGS 18

SAFETY CONSIDERATIONS

Improper installation, adjustment, alteration, service, maintenance, or use can cause explosion, fire, electrical shock, or other conditions that may cause death, personal injury or property damage. The qualified installer or agency must use factory-authorized kits or accessories when modifying this product.

Follow all safety codes. Wear safety glasses, protective clothing, and work gloves. Use quenching cloth for brazing operations. Have fire extinguisher available. Read these instructions thoroughly and follow all warnings or cautions included in literature and attached to the unit. Consult local building codes and the current editions of the National Electrical Code (NEC) ANSI/NFPA (American National Standards Institute/National Fire Protection Association) 70. In Canada, refer to the current editions of the Canadian Electrical Code CSA (Canadian Standards Association) C22.1.

Understand the signal words — **DANGER**, **WARNING**, and **CAUTION**. **DANGER** identifies the most serious hazards, which will result in severe personal injury or death. **WARNING** signifies hazards that could result in personal injury or death. **CAUTION** is used to identify unsafe practices, which would result in minor personal injury or product and property damage.

Recognize safety information. This is the safety-alert symbol (⚠). When this symbol is displayed on the unit and in instructions or manuals, be alert to the potential for personal injury.

⚠ WARNING

Electrical shock can cause personal injury and death. Shut off all power to this equipment during installation. There may be more than one disconnect switch. Tag all disconnect locations to alert others not to restore power until work is completed.

⚠ WARNING

When installing the equipment in a small space, provide adequate measures to avoid refrigerant concentration exceeding safety limits due to refrigerant leak. In case of refrigerant leak during installation, ventilate the space immediately. Failure to follow this procedure may lead to personal injury.

⚠ WARNING

DO NOT USE TORCH to remove any component. System contains oil and refrigerant under pressure.

To remove a component, wear protective gloves and goggles and proceed as follows:

a. Shut off electrical power to unit.
b. Recover refrigerant to relieve all pressure from system using both high-pressure and low-pressure ports.
c. Traces of vapor should be displaced with nitrogen and the work area should be well ventilated. Refrigerant in contact with an open flame produces toxic gases.
d. Cut component connection tubing with tubing cutter and remove component from unit. Use a pan to catch any oil that may come out of the lines and as a gage for how much oil to add to the system.
e. Carefully unsweat remaining tubing stubs when necessary. Oil can ignite when exposed to torch flame.

Failure to follow these procedures may result in personal injury or death.

Manufacturer reserves the right to discontinue, or change at any time, specifications or designs without notice and without incurring obligations.

⚠ CAUTION

DO NOT re-use compressor oil or any oil that has been exposed to the atmosphere. Dispose of oil per local codes and regulations. DO NOT leave refrigerant system open to air any longer than the actual time required to service the equipment. Seal circuits being serviced and charge with dry nitrogen to prevent oil contamination when timely repairs cannot be completed. Failure to follow these procedures may result in damage to equipment. For information about replacement oil type and viscosity, see the Installation, Start-Up, and Service Instructions for the 38VMAH and 38VMAR outdoor units.

GENERAL

The 40VMW high wall mount unit provides an efficient way to heat or cool a space and an attractive appearance. The equipment is initially protected under manufacturer's standard warranty; however, warranty is provided under the condition that the steps outlined in this manual for initial inspection, proper installation, regular periodic maintenance, and everyday operation of the unit be followed in detail. This manual should be fully reviewed in advance before initial installation, start-up, and any maintenance. Contact your local sales representative or the factory with any questions BEFORE proceeding.

Table 1 lists physical data for each unit size. See Fig. 1 for model number nomenclature. Figures 2 and 3 show unit dimensions. Table 2 shows components that may or may not be used for a particular installation.

Table 1 — 40VMW Physical Data

UNIT 40VMW	005	007	009	012	015	018	024	030
POWER SUPPLY (V-Ph-Hz)	208/230-1-60							
TOTAL COOLING CAPACITY (Btuh)	5,000	7,500	9,500	12,000	15,000	18,000	24,000	30,000
SENSIBLE COOLING CAPACITY (Btuh)	4,060	5,640	6,520	7,930	10,140	12,040	15,330	18,950
HEATING CAPACITY (Btuh)	6,000	8,500	10,900	13,500	17,000	21,000	27,000	34,000
INDOOR FAN MOTOR								
Type	DC Motor							
Input (W)	11	25	25	30	35	45	75	85
INDOOR COIL								
Number of Rows	2							
Fin Spacing (fins/in.)	17						20	
Fin Type	Hydrophilic Aluminum							
Tube Diameter, OD (in.)	0.276							
Tube Type	Inner Groove							
Number of Circuits	3				4		5	
INDOOR AIRFLOW (cfm)								
Low	245	245		250	380	440	460	480
Medium	245	270		280	420	470	530	600
High	245	320		360	480	560	650	770
INDOOR NOISE LEVEL (dBA)								
Low	31.7	31.2	31.8	32.8	38.4	38.9	36.8	38.1
Medium	31.7	32.2	32.6	34.6	39.6	40.2	42.0	43.6
High	31.7	34.0	34.5	36.4	41.7	41.8	43.2	48.3
UNIT								
Unit Dimensions W x H x D (in.)	36 x 11-3/8 x 9				42-1/4 x 12-3/8 x 9		47 x 13-1/2 x 10-1/8	
Packing Dimensions W x H x D (in.)	40-1/8 x 15-3/8 x 12-3/8				46-1/2 x 17-1/8 x 12-7/8		50-3/4 x 15-1/8 x 18-1/8	
Net/Gross Weight (lb)	28/35				32/40.5		38/50.5	
REFRIGERANT TYPE	R-410A							
EXPANSION DEVICE	EEV							
DESIGN PRESSURE, H/L (psig)	580/320							
REFRIGERANT PIPING (in.)								
Liquid Side, OD	$^1/_4$					$^3/_8$		
Suction Side, OD	$^1/_2$					$^5/_8$		
CONNECTING WIRING								
Power Wiring	Sized per NEC and Local Codes Based on Nameplate Electrical Data							
Signal Wiring	2-Core Stranded Shielded Cable 18 AWG							
DRAINAGE WATER PIPE DIAMETER, OD (in.)	$^3/_4$ NPT							

LEGEND
AWG — American Wire Gage
EEV — Electronic Expansion Valve
NEC — National Electrical Code

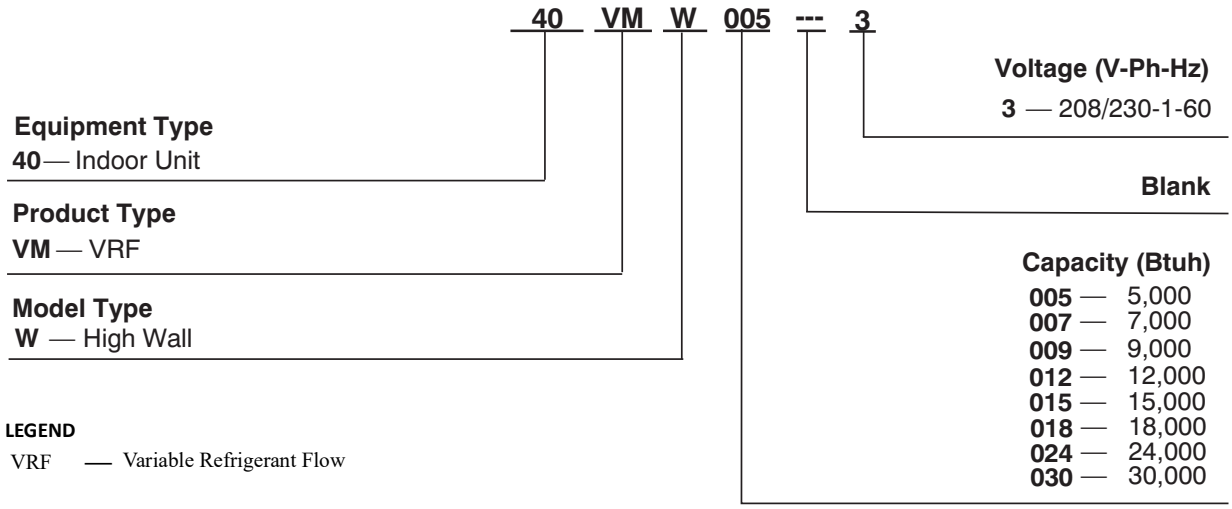

Fig. 1 —Model Number Nomenclature

Table 2 — Components Shipped With Unit

NAME	SHAPE	QUANTITY	FUNCTION
Screw ST3.9x25 for installation board		8	Secure the mounting plate
Plastic screw anchor		8	Anchoring screw
Wrapping tape		1	For routing condensate from right to left
Condensate connection		1	For connecting drain
Sleeve cap		1	Exterior wall opening
Piping sleeve		1	Routing refrigerant pipes
Copper nut		1	Connect piping
Flexible conduit and connectors		1	Routing power lines
PQE connection wire		2	To connect outdoor unit, indoor unit, and sub MDC
Connecting wire		1	For occupancy sensor
No Beep Harness		1	Prevent beeping noise

LEGEND
MDC — Multiport Distribution Controller

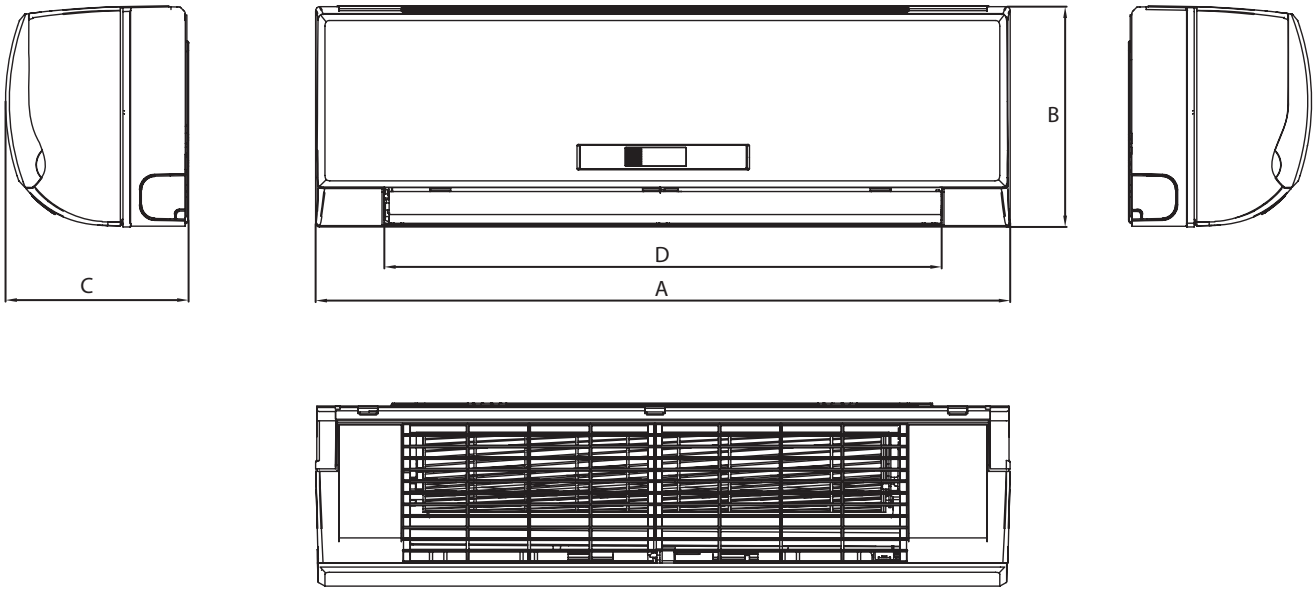

40VMW UNIT SIZE	DIMENSION			
	A	B	C	D
005-012	36	11 3/8	9	28 3/4
015-018	42 1/4	12 3/8	9	35 1/8

NOTE: All dimensions shown in inches.

Fig. 2 —40VMW005-018 Dimensions

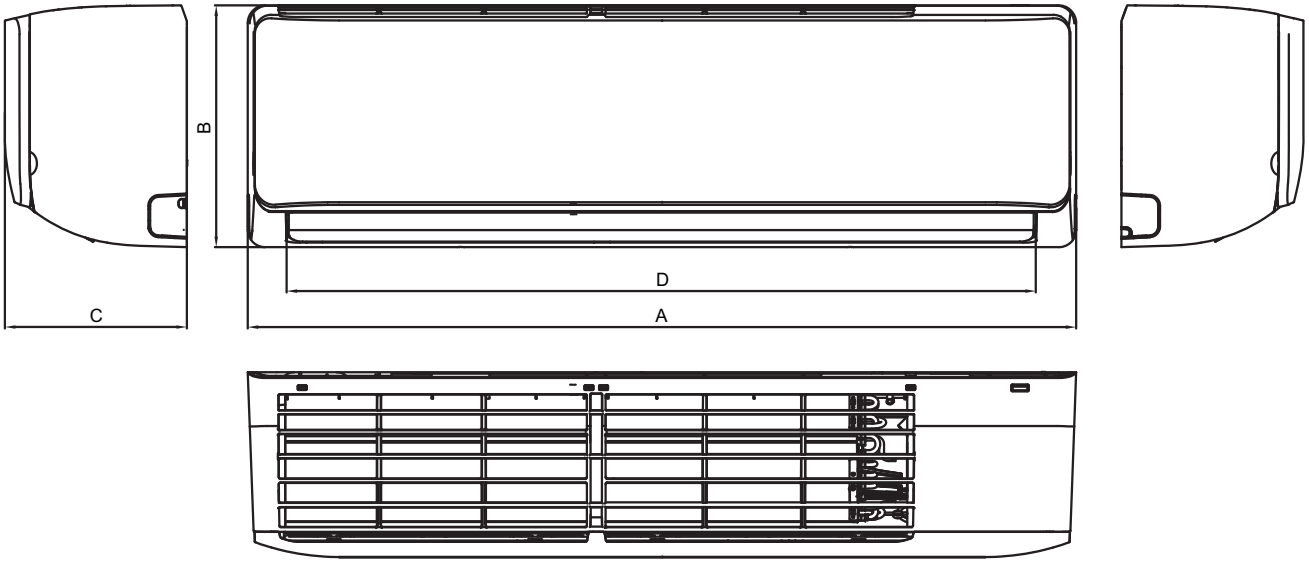

40VMW UNIT SIZE	DIMENSION			
	A	B	C	D
024, 030	47	13 1/2	10 1/8	42 3/8

Fig. 3 —40VMW024, 030 Dimensions

INSTALLATION

Step 1 — Unpack and Inspect Units — Units are packaged for shipment to avoid damage during normal transit and handling. It is the receiving party's responsibility to inspect the equipment upon arrival. Any obvious damage to the carton and/or its contents should be reported on the bill of lading and a claim should be filed with the transportation company and the factory. Unit should always be stored in a dry place, and in the proper orientation as marked on the carton.

⚠ CAUTION

To avoid equipment damage, do not lift unit by the drain pipe or refrigerant piping. Unit should be lifted using the mounting brackets.

After determining the condition of carton exterior, carefully remove each unit from the carton and inspect for hidden damage. Check to make sure that items such as thermostats and controllers are accounted for whether packaged separately or shipped at a later date. Any hidden damage should be recorded, a claim should be filed with the transportation company, and the factory should be notified. In the event a claim for shipping damage is filed, the unit, shipping carton, and all packing must be retained for physical inspection by the transportation company. All units should be stored in the factory shipping carton with internal packaging in place until installation.

PROTECTING UNITS FROM DAMAGE —

Do not apply force or pressure to coil, piping, or drain stub-outs during handling. All units should be handled by the chassis or as close as possible to the unit mounting point locations.

The unit must always be properly supported. Temporary supports used during installation or service must be adequate to hold the unit securely. To maintain warranty, protect units against hostile environments (such as rain, snow or extreme temperature), theft, vandalism, and debris on jobsite. Equipment covered in this manual is not suitable for outdoor installations. Do not allow foreign material to fall into drain pan. Prevent dust and debris from being deposited on motor, fan wheels, and coils. Failure to do so may have serious adverse effects on unit operation, and in the case of motor and blower assembly, may result in immediate or premature failure. Failure of any unit caused by deposits of foreign material on the motor or blower wheels will not be covered by the manufacturer's warranty. Some units and/or job conditions may require some form of temporary covering during construction.

PREPARING JOBSITE FOR UNIT INSTALLATION —

To save time and to reduce the possibility of costly errors, set up a complete sample installation in a typical room at jobsite. Check all critical dimensions such as pipe, wire, and duct connections requirements. Refer to job drawings and product dimension drawings as required. Instruct all trades in their parts of the installation. Units must be installed in compliance with all applicable local code requirements.

IDENTIFYING AND PREPARING UNITS — Be sure power requirements match available power source. Refer to unit nameplate and wiring diagram. In addition:

- Check all tags on unit to determine if shipping screws are to be removed. Remove screws as directed.
- Rotate fan wheel by hand to ensure that fan is unrestricted and can rotate freely. Check for shipping damage and fan obstructions. Adjust blower motor as required.

Step 2 — Position the Unit

⚠ DANGER

Units must not be installed where they may be exposed to potentially explosive or flammable atmosphere. If this instruction is not followed exactly, a fire or explosion may result, causing property damage, injury, or loss of life.

Select the unit position with the following points in mind:

- The unit should be installed on wall studs that are strong enough to support the total weight of the unit, refrigerant piping, and condensate.
- The unit should be mounted eight feet or more from the floor, and if possible, centrally located on the wall from both ends.
- Proper clearance should be provided on the side and top as shown in Fig. 4.

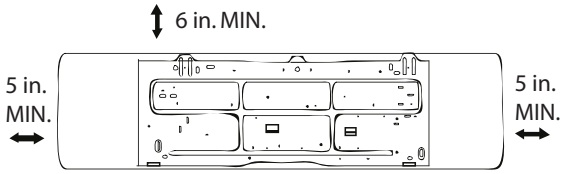

Fig. 4 —Required Clearances

- The unit should not be positioned directly above any obstruction.
- The unit must be installed square and level.
- The condensate drain should have sufficient downward slope in the condensate flow direction.

Step 3 — Mount the Unit

⚠ CAUTION

When determining the unit mounting location, make sure that there are no water, plumbing, or electrical lines running through the wall. Failure to follow this instruction may result in property damage.

1. Detach the mounting plate from the unit.
2. Place mounting plate on wall where unit will be installed and mark the mounting holes. See Fig. 5. Be sure the mounting hole marks are positioned over the wall studs.

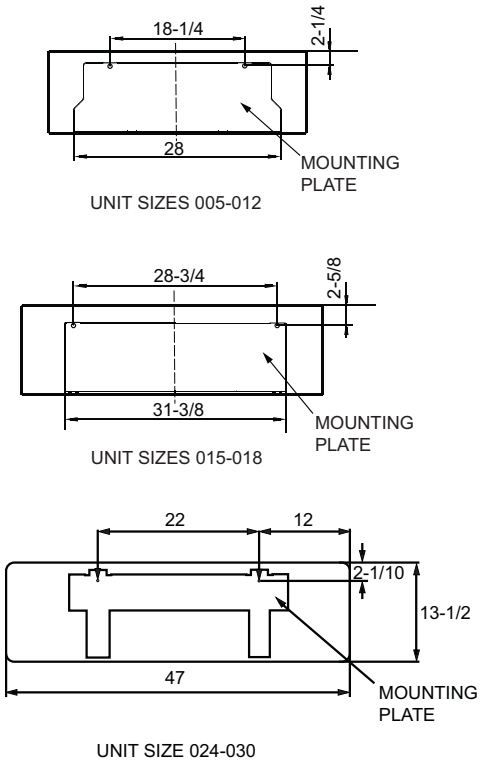

NOTE: All dimensions in inches.

Fig. 5 —Mounting Plate

3. Mark the condensate and refrigerant piping route. If necessary, cut a hole in the wall to route the piping.
4. Secure the mounting plate with screws that can support the weight of the unit. For nominal weight of the unit, see Table 1.
5. Make sure mounting plate is level and flush with the wall.
6. Secure the unit in position by lifting the unit over the mounting plate. Make sure the hook on the mounting plate aligns with the slot on the back of the unit. To ensure proper fit, slide the unit sideways. If the unit is locked in the correct position, it should not move.

Step 4 — Connect Piping

GENERAL —

1. For condensate and refrigerant piping, lift the unit from the bottom making sure the unit is still attached to the mounting plate at the top. See Fig. 6.
2. Introduce temporary cushioning material to maintain the space needed to connect the piping and to avoid damage to the unit and wall. See Fig. 6.

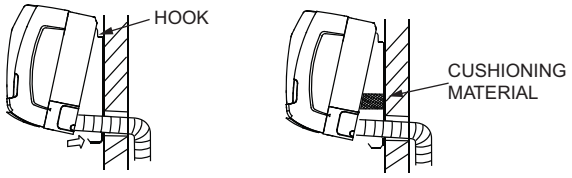

Fig. 6 —Piping Connection

3. When the piping connections are completed, remove the cushioning material and make sure the unit is flush with the wall.

CONDENSATE PIPING — The unit is supplied with a $^3/_4$-in OD drain connection to connect copper or PVC drain piping. When installing condensate piping, follow these recommendations:

- Condensate drain should slope downward in the direction of condensate flow.
- DO NOT install any U bends or dump condensate line in a sump filled with water. See Fig. 7.

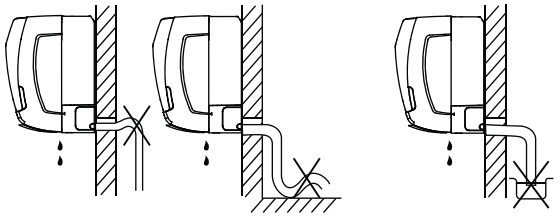

Fig. 7 — Condensate Piping, Poor Installation

- When multiple units are connected to a common condensate drain, ensure that drain is large enough to accommodate the volume of condensate from all units. It is also recommended to have an air vent in the condensate piping to prevent any air locks.
- Condensate piping must not be installed where it may be exposed to freezing temperatures.
- Condensate piping can be routed in one of the four directions shown in Fig. 8.

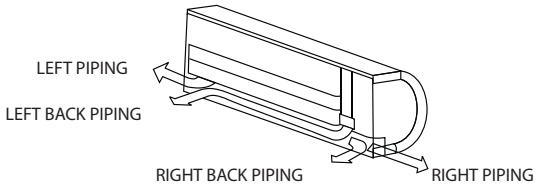

Fig. 8 — Condensate Pipe Routes

- While routing the condensate from right to left, behind the unit, make sure all the piping is wrapped and placed in the piping chase as shown in Fig. 9.

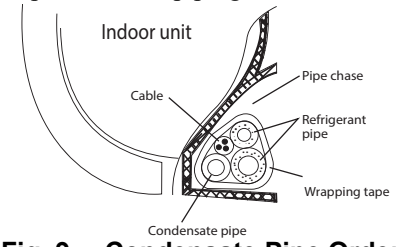

Fig. 9 —Condensate Pipe Ordering

REFRIGERANT PIPING —

⚠ CAUTION

When connecting from an indoor unit to an outdoor unit, the isolation valve at the outdoor unit should be in closed position throughout the refrigerant piping process. Failure to follow this procedure may result in equipment damage.

When connecting from an indoor unit to an outdoor unit, follow these procedures:

- Check maximum height drop and length of refrigerant piping between the indoor and outdoor unit. If the difference between them is more than 33 feet, consider mounting the outdoor unit above indoor unit.
- Refrigerant piping connection between indoor and outdoor units should be performed once the units are secured at their respective installation locations.
- The refrigeration piping starts at the indoor unit and ends at the outdoor unit.
- There should be less than 15 bends in the refrigeration piping.
- The refrigerant piping should be dry and free of dust and other impurities.
- The bending angle of the refrigerant pipe should not exceed 90° and the bending radius should be as large as possible to prevent any breakage in piping.
- Use proper cutting and flaring tools to avoid leakage.
- Use a torque wrench for flare nuts. Refer to Table 3 for flare nut torque recommendations.

Table 3 — Flare Nut Torque Recommendations

OUTSIDE DIAMETER (in.)	RECOMMENDED TORQUE (ft-lb)
1/4	15
3/8	26
1/2	41
5/8	48

- Before insulating the suction and liquid refrigeration pipes, perform pressure and leak tests. For details, see the outdoor unit installation manual. Insulating both suction and liquid refrigerant pipes is recommended.
- Vacuuming and charging of the system should be carried out as described in the outdoor unit installation manual.

Step 5 — Complete Electrical Connections

Installation of wiring must conform to local building codes and with National Electric Code ANSI/NFPA 70, latest editions. Units must be electrically grounded in conformance with the code. In Canada, wiring must comply with CSA C22.1, Electrical Code.

⚠ WARNING

Electrical shock can cause personal injury and death. Disconnect the power supply before making wiring connections. There may be more than one disconnect switch. Tag all disconnect locations to alert others not to restore power until work is completed.

⚠ WARNING

All units must be wired strictly in accordance with the wiring diagram furnished with the unit. Any wiring different from the wiring diagram could result in personal injury and property damage.

⚠ CAUTION

Any original factory wiring that requires replacement must be replaced with wiring material having a temperature rating of at least 105°C.

Ensure supply voltage to the unit, as indicated on the serial plate, is not more than 10% over the rated voltage or 10% under the rated voltage.

Failure to follow these recommendations may result in equipment damage.

This equipment in its standard form is designed for an electrical supply of 208/230-1-60. Any damage to or failure of units caused by incorrect wiring or voltage is not covered by warranty.

Electric wiring must be sized to carry the full load amp draw of the motor, starter, and any other controls that are used with the unit. Refer to Table 4 for electrical data.

Table 4 — 40VMW Electrical Data

UNIT	POWER SUPPLY	
	MCA	MOPD
40VMW005	0.29	15
40VMW007	0.45	15
40VMW009	0.45	15
40VMW012	0.45	15
40VMW015	0.45	15
40VMW018	0.45	15
40VMW024	0.86	15
40VMW030	0.86	15

LEGEND

MCA — Minimum Circuit Amps

MOPD — Maximum Overcurrent Protective Device

After the pipe work is complete, the electrical supply can be connected by routing the cable through the appropriate casing holes or knockouts and connecting the supply and ground cables to the unit's power terminal.

Be sure the power wiring and control wiring do not cross, as this might cause disturbance on the controls side. See Fig. 10 for wiring diagram.

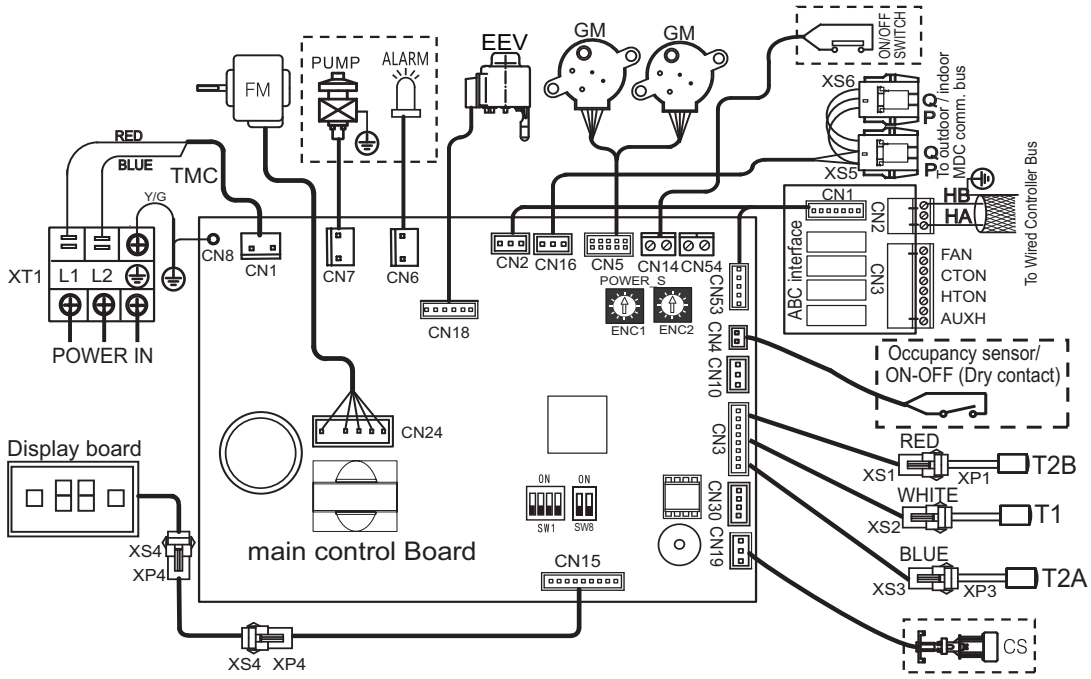

LEGEND

ACB	— Auxiliary Control Board
ALARM	— Warning Lamp (Optional)
CS	— Condensate Switch (Optional)
EEV	— Electronic Expansion Valve
FM	— Indoor Fan Motor
GM	— Swing Motor
MDC	— Multiport Distribution Controller
PUMP	— Pump Motor (Optional)
T1	— Room Temp. Sensor
T2A	— Inlet Pipe Temp. Sensor
T2B	— Outlet Pipe Temp. Sensor
XP1-4/XS1-6	— Connectors
XT1	— Terminal

Fig. 10 — 40VMW005-030 Typical Wiring Diagram

POWER AND CONTROL WIRING —

1. Lift up the front panel and look for the control box cover as shown in Fig. 11.

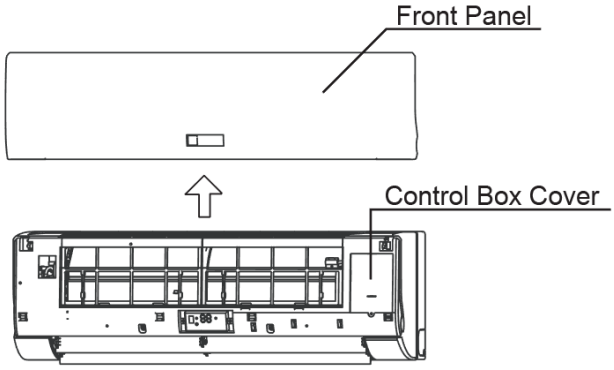

Fig. 11 —Accessing Control Box Cover

2. Remove the control box cover plate and look for the power and control wire holders to route the wires to the proper terminals as shown in Fig. 12.

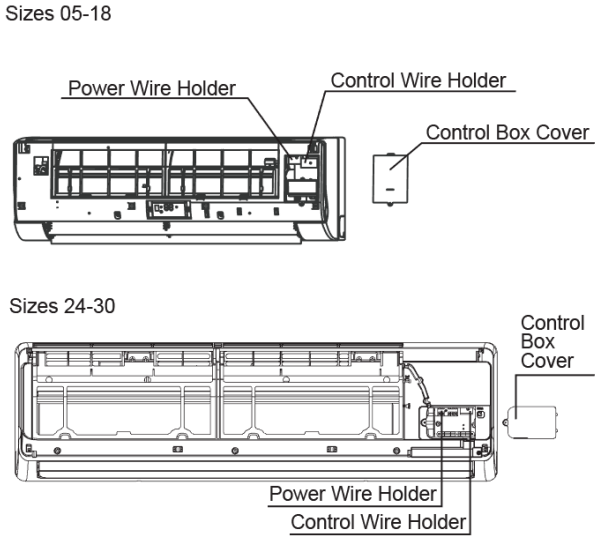

Fig. 12 —Removing Control Box Cover

Step 6 — Position and Connect Controller

NOTE: Controllers are ordered separately.

Wired controllers should be installed in a position that maintains good temperature control:

- Position the thermostat approximately 48 inches above floor level.
- Do not position thermostat where it can be directly affected by the unit's discharge airstream.
- Avoid external walls and drafts from window and doors.
- Avoid positioning near shelves and curtains as these restrict air movement.
- Avoid heat sources such as direct sunlight, heaters, dimmer switches, and other electrical devices.

See Fig. 13 and Fig. 14.

CONTROL WIRING —

1. The communication wire should be 2-core stranded shielded wire.
2. For indoor and outdoor unit communication, use P, Q terminals. Shielded core should be used for ground.
3. Wiring should be done according to wiring diagram.
4. Communication wire must not form a closed loop.
5. Use separate conduit for power and control wiring.

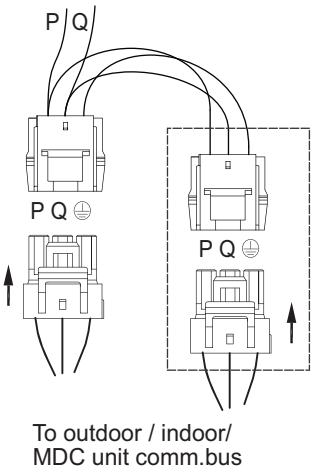

Fig. 13 —Communication Wire Connection

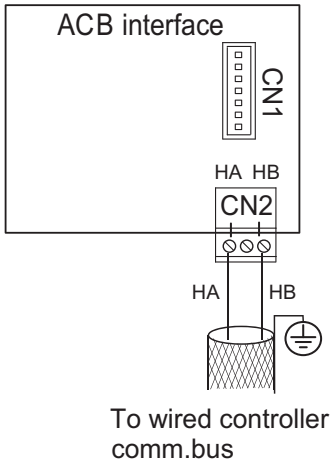

LEGEND

ACB — Auxiliary Control Board

Fig. 14 — ACB Interface Wiring

OPTION/EXTENSIONS OF COMMUNICATION WIRING — To extend control wiring or make terminal connections, use the PQE connection wire supplied in the accessory kit and follow the steps below.

1. Cut the connector on the outdoor unit side as shown in Fig. 15.

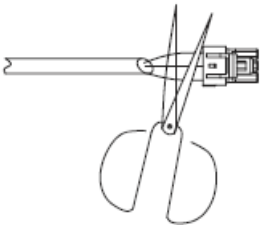

Fig. 15 —Shearing Outdoor Connector

2. Strip a suitable length of the insulation layer as shown in Fig. 16.

Fig. 16 —Stripping the Wire

3. Use a suitable screwdriver to fix the communication wire on the outdoor unit communication terminal as shown in Fig. 17.

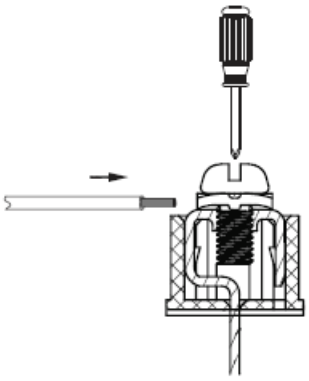

Fig. 17 —Connecting Communication Wire to Outdoor Unit Communication Terminal

If communication wires are used to connect between indoor units, find the corresponding port and plug it in directly as shown in Fig. 18.

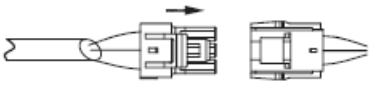

Fig. 18 —Connecting the Communication Wires

If it is not possible to buy communication wires from Carrier, connect the indoor unit side of the communication wires using the connector provided with the accessories as shown in Figs. 19-21.

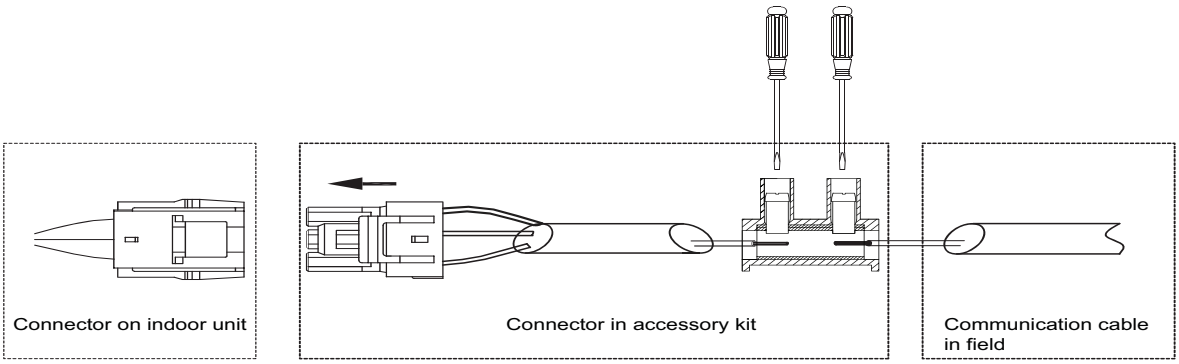

Fig. 19 — Connecting the Communication Cable to Indoor Unit to Outdoor Unit Using the Supplied Connector

⚠ CAUTION

Failure to follow these procedures may result in personal injury or damage to equipment.

NEVER CONNECT the main power source to the control or communication terminal block.

USE AN APPROPRIATE SCREWDRIVER for tightening the terminal screws. Do not over tighten the terminal screws.

IMPORTANT: Wiring for communication shall be two inches or more apart from power source wiring to avoid electric noise. Do not insert control/communication and power source wire in the same conduit.

IMPORTANT: Pay attention to the polarity of the communication wire.

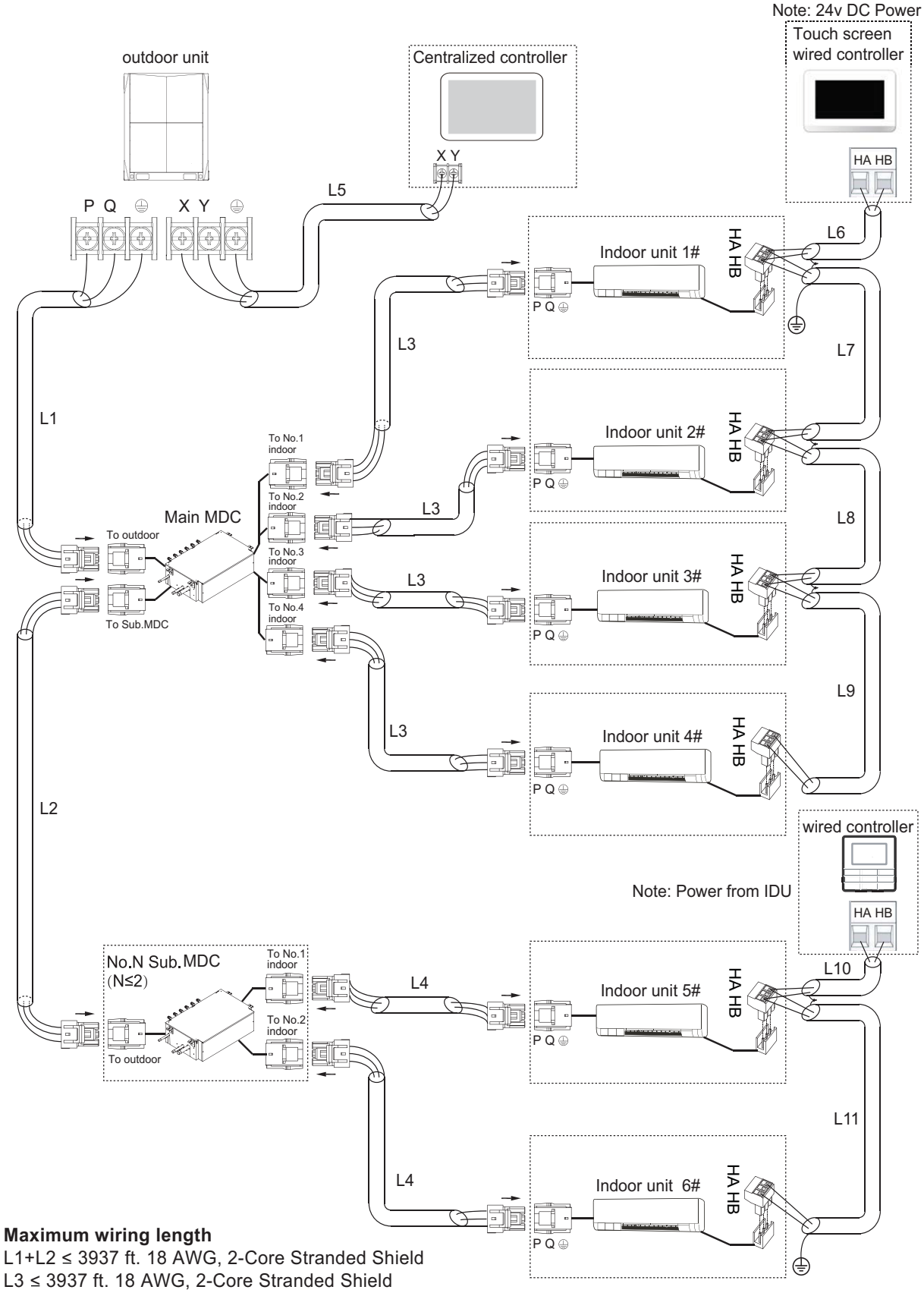

Maximum wiring length

L1+L2 ≤ 3937 ft. 18 AWG, 2-Core Stranded Shield
L3 ≤ 3937 ft. 18 AWG, 2-Core Stranded Shield
L4 ≤ 3937 ft. 18 AWG, 2-Core Stranded Shield
L5 ≤ 3937 ft. 18 AWG, 2-Core Stranded Shield
L6+L7+L8+L9 ≤ 820 ft. 18 AWG, 2-Core Stranded Shield
L10+L11 ≤ 820 ft. 18 AWG, 2-Core Stranded Shield

LEGEND

AWG — American Wire Gage
IDU — Indoor Unit
MDC — Multiport Distribution Controller

Fig. 20 — Typical Communication Wiring of Heat Recovery System

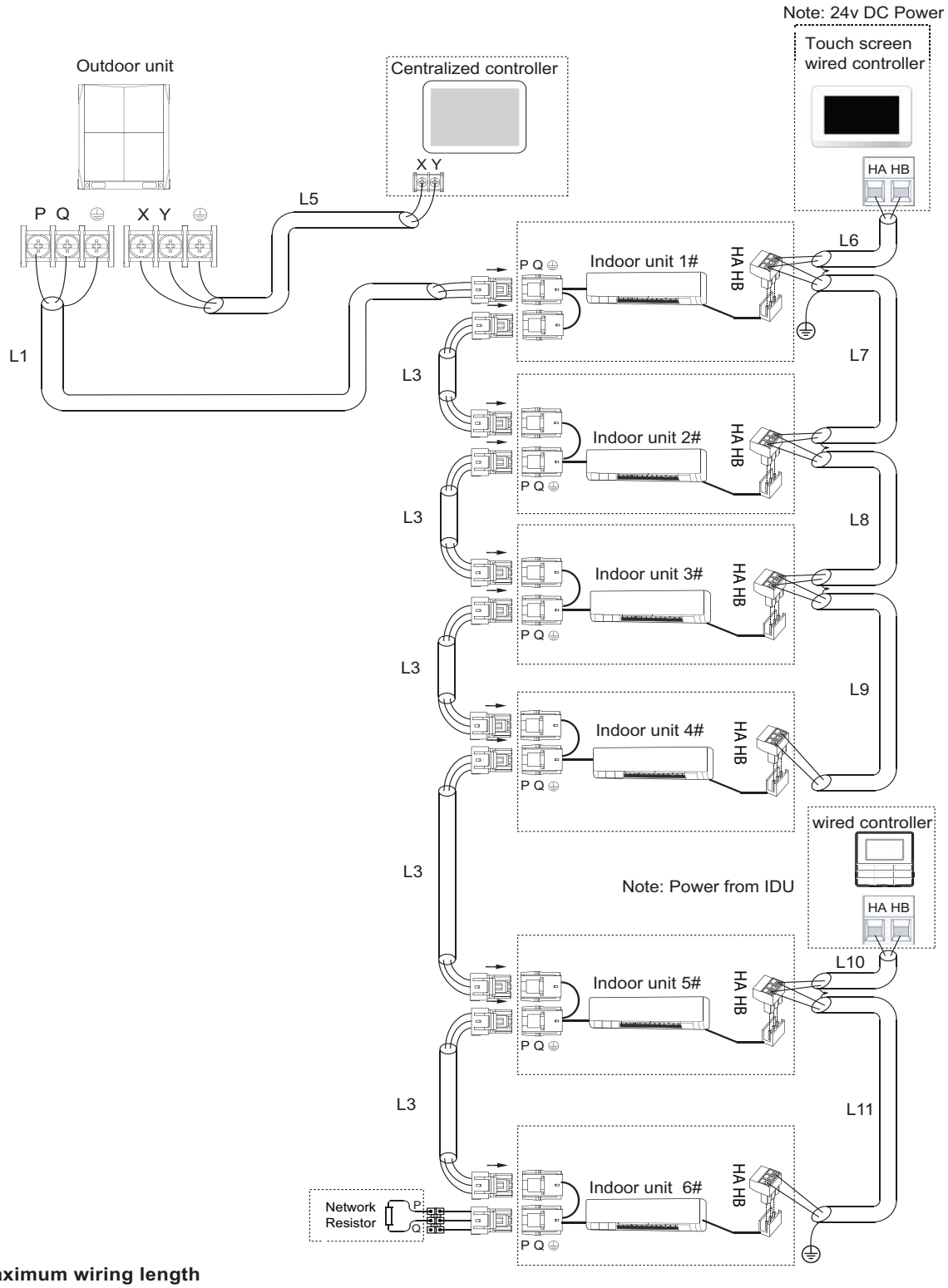

Maximum wiring length

L1+L3 ≤ 3937 ft. 18 AWG, 2-Core Stranded Shield
L5≤ 3937 ft. 18 AWG, 2-Core Stranded Shield
L6+L7+L8+L9≤ 820 ft. 18 AWG, 2-Core Stranded Shield
L10+L11 ≤ 820 ft. 18 AWG, 2-Core Stranded Shield

NOTE: Network resistor is shipped with the outdoor unit for installation on heat pump systems.

LEGEND

AWG __ America Wire Gage
IDU __ Indoor Unit

Fig. 21 —Typical Communication Wiring of Heat Pump System

ACB (Auxiliary Control Board) Interface — The ACB interface is a dry contact board that can output up to four signals controlling devices. Refer to Fig. 22 for connecting devices to the ACB interface board.

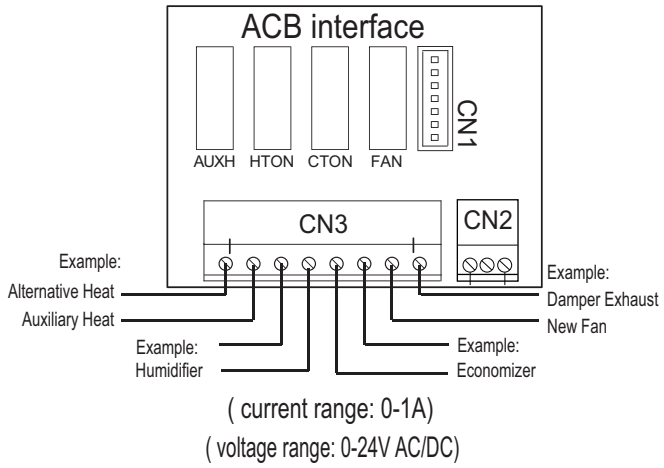

MAX AMPS - 1A
MAX VOLTAGE - 24V

LEGEND

ACB — Auxiliary control board
AUXH — Output for auxiliary heat
CTON — Output for cooling operation
FAN — Output for fan operation
HTON — Output for heating operation

Fig. 22 —ACB Interface

START-UP

Pre-Start Check — Once installation is complete, make the following pre-start checks:

1. All indoor and outdoor units are properly installed.
2. All piping and insulation is complete.
3. All electrical connections (both power and control) are properly terminated.
4. All condensate drains are installed correctly.
5. The power supply is of the right voltage and frequency.
6. The units are properly grounded in accordance with current electrical codes.
7. Suction and liquid line service valves are in open position.

System Operation Check — Once the installation and pre-start checks are completed, follow these steps:

1. Using remote controller, select cooling or heating mode to check the operation of the system.
2. While the system is in operation, check the following on the indoor unit:
   a. Switches or buttons on the remote controller are easy to push.
   b. Indicator light is showing normal operation and no error is indicated.
   c. Swing mode of air louvers is working (if applicable to unit).
   d. Drain pump operation is normal (if applicable).
   e. No abnormal vibration or noise is noticed.
3. While the system is in operation, check the following on outdoor unit:
   a. No abnormal vibration or noise is noticed.
   b. Condenser fan is in operation.
   c. Indicator light is showing normal operation and no error is indicated.

NOTE: If the unit is turned off or restarted, there is a time delay of three minutes for the compressor to start from the time the power is restored.

MAINTENANCE

⚠ CAUTION

When servicing or repairing this unit, use only factory-approved service replacement parts. Refer to the rating plate on the unit for complete unit model number, serial number, and company address. Any substitution of parts or controls not approved by the factory will be at the owner's risk and may result in equipment damage.

⚠ CAUTION

To avoid equipment damage, do not attempt to reuse any mechanical or electrical controllers that have been wet. Replace defective controller.

Every 3 Months:

- Check the air filter condition. Clean or replace if necessary.

Every 6 Months:

Follow 3-month maintenance schedule. In addition:

- Clean condensate tray with suitable cleaning agent.
- Clean the grille and panel.

Every 12 Months:

Follow 6-month maintenance schedule. In addition:

- Be sure all electrical connections are secure.
- Check condensate pump operation.
- Check the heating and cooling action to confirm proper operation.

INDOOR UNIT ADDRESSING

For proper system operation, each indoor unit must have a unique address set from 0 to 63. When setting an address by remote controller; the outdoor units, indoor units, and MDC must be powered on. If **FE** is displayed on the LED screen or display board, this unit has no address. After setting all indoor unit addresses, turn off the power supply to all indoor units to clear errors.

Indoor unit addressing can be distributed automatically in the heat pump system. When dip switch **S6** on the outdoor unit's main PCB board is set to 00 (default set in factory), indoor units are set for auto-addressing. When powering on for the first time, it takes six minutes or more to finish auto-addressing each indoor unit. The heat recovery system cannot accomplish this function at this time.

Wireless Remote Controller (40VM900001) —

Indoor unit addressing can be performed using wireless remote controller. When using wireless controller, user must maintain a line of sight with the receiver on indoor unit. See Fig. 23 for a description of the buttons on the wireless remote.

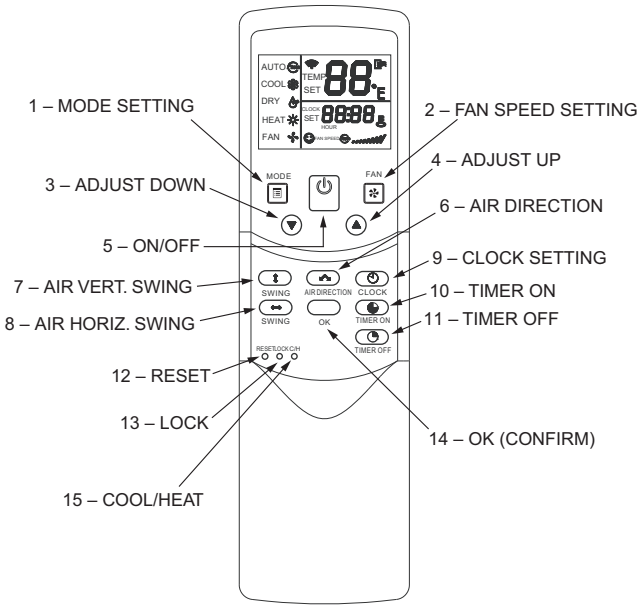

Fig. 23 —Wireless Remote Controller (40VM900001)

Use a tool to press and hold the LOCK button for at least ten seconds, and press ⏻ to activate. Click ▲ or ▼ to select an address and press FAN to send the setting.

To display an indoor unit address, use a tool to press and hold the LOCK button for at least ten seconds, and press MODE to query the addresses.

Non-Programmable Controller —

When setting an address, connect only one wired controller to an indoor unit.

Press **ROOM TEMP** and **SWING** simultaneously for three seconds. If there is no address for this indoor unit, the display shows **FE# 00**. See Fig. 24. Otherwise, the display shows the current address of the indoor unit.

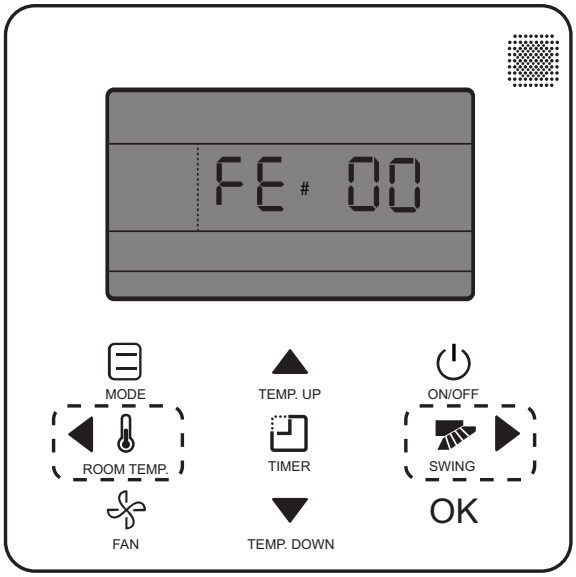

Fig. 24 — Non-Programmable Controller IDU Addressing Menu

Click **TEMP.UP** or **TEMP.DOWN** to change 00 to the desired address as shown in Fig. 25. Press **OK** to confirm and exit the setting interface.

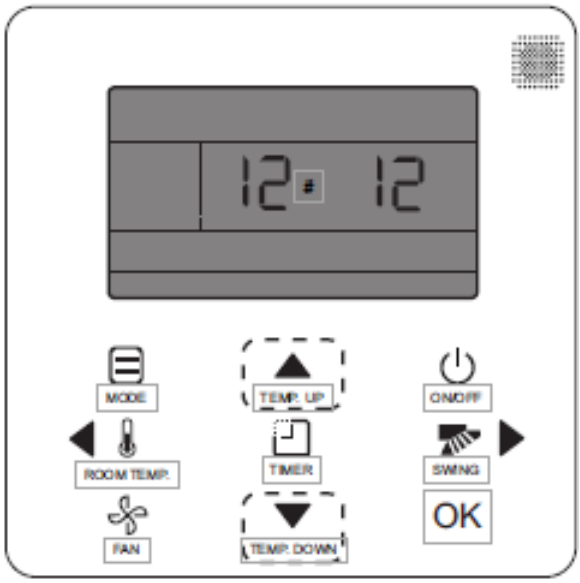

Fig. 25 —Non-Programmable Controller Setting IDU Address

Programmable Controller —

When setting an address, connect only one wired controller to an indoor unit.

1. Press **FAN** and **BACK** simultaneously for five seconds to access parameter settings as shown in Fig. 26.

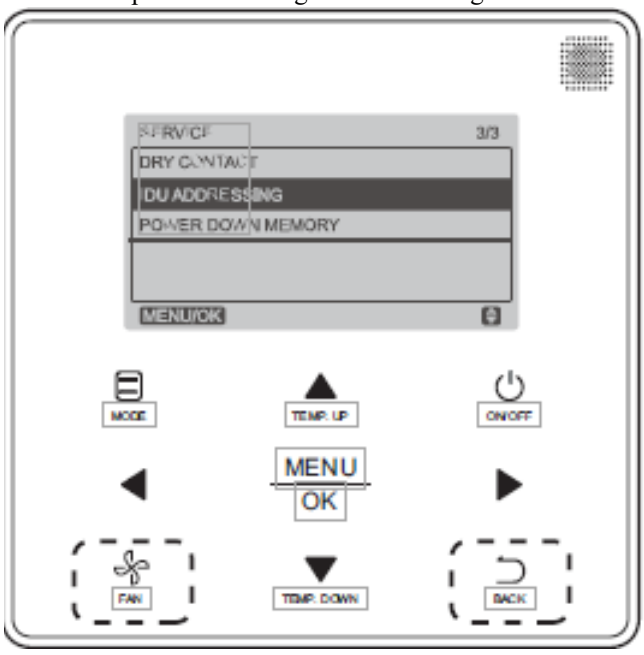

Fig. 26 —Programmable Controller IDU Addressing Menu

2. Press **TEMP.UP** or **TEMP.DOWN** to move the cursor down, choose IDU ADDRESSING and **MENU/OK** to enter this setting.

3. Press **TEMP.UP** or **TEMP.DOWN** to choose the address you want to set as shown in Fig. 27. Press **MENU/OK** to send this address to the IDU.

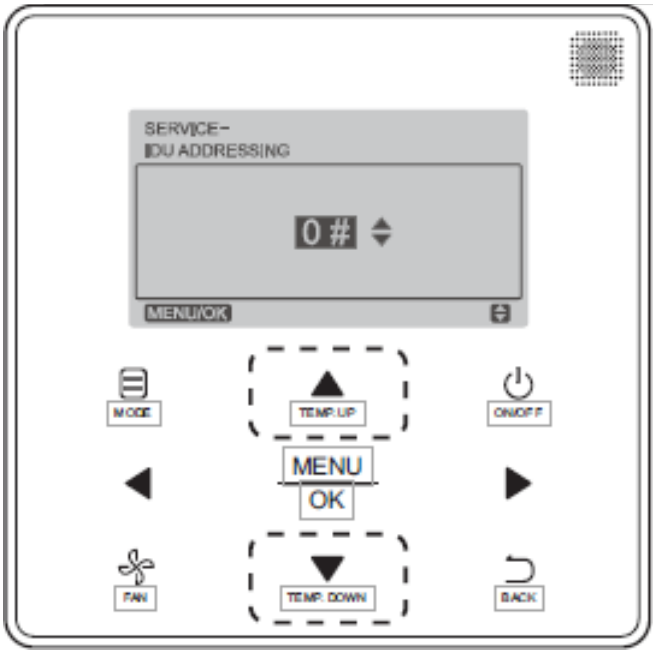

Fig. 27 —Programmable Controller Setting IDU Address

4. Press **BACK** twice or wait 30 seconds to automatically exit the parameter settings menu.

TROUBLESHOOTING

Figure 28 shows the display panels for 40VMW005-018 and 40VMW024-30 units. See Table 5 for a summary of display indicators. Table 6 lists problems, possible causes, and possible solutions.

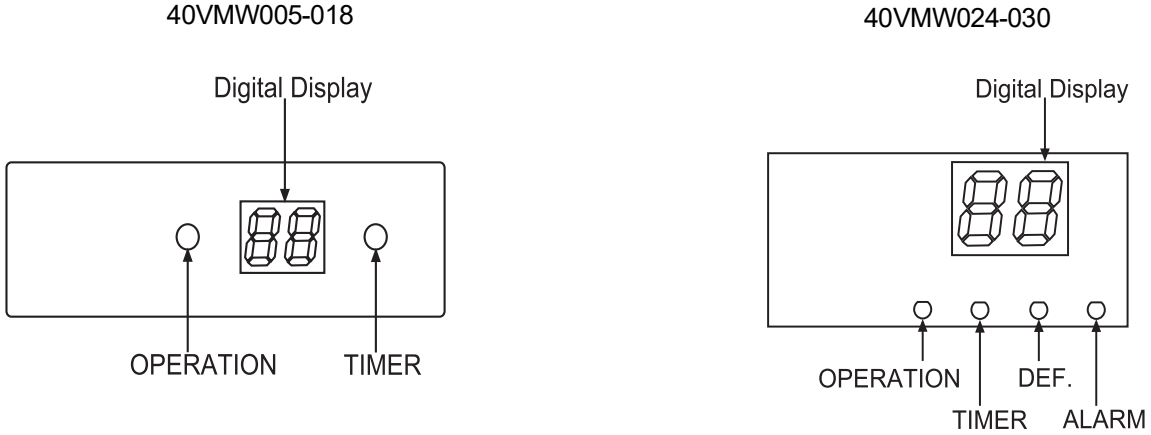

LEGEND

DEF. — Defrost

Fig. 28 —40VMW Display Panel

Table 5 — Display Indicators

TYPE	DIGITAL DISPLAY	MODE/STATUS
[NO ERROR]	Setting Temperature	Starting
	"--"	Shutdown
	"--"	Standby
	"--"	Timing ON
	"--"	Timing OFF
	Setting Temperature	System Defrost ON
	Setting Temperature	System Defrost OFF
	Room Temperature	Only Fan
ERROR	dd	Heating / Cooling Mode Conflict Error
	E1	Communication Error Between Indoor and Outdoor Unit
	E2	Check Indoor Temperature Sensor (T1)
	E4	Check Evaporator Outlet Temperature Sensor (T2B)
	E5	Check Evaporator Temperature Sensor (T2A)
	E6	Check DC Fan
	E7	EEPROM Error (Data Storage)
	E9	Communication Error Between Indoor Unit and Wired Controller.
	Eb	EEV Error
	Ed	Outdoor Unit Error
	EE	Condensate Overflow
	FE	No Address When Powered ON For First Time
	UU	MDC In Auto System-Check Mode.

LEGEND

ACB — Auxiliary Control Board
EEPROM — Electronically Erasable Programmable Read-only Memory
EEV — Electronic Expansion Valve
MDC — Multi-port Distribution Controller

Table 6 — Troubleshooting

DIGITAL DISPLAY	DESCRIPTION	POSSIBLE CAUSES	POSSIBLE SOLUTIONS
dd	Heating/Cooling Mode Conflict	System is in cooling or fan mode only and heating signal is received from a unit in the system.	All units should be in cooling mode for system to stay in cooling mode.
		System is in heating mode and cooling signal is received from a unit in the system.	All units should be in heating mode.
E1	Communication Error Between Indoor and Outdoor Unit	Signal wires are short-circuited or disconnected.	Check or reconnect signal wire.
		Signal wires close to electromagnetic source.	Distance signal wires from electromagnetic source.
		PC board fault.	Replace PC board.
E2, E4, E5	Check Temperature Sensor	Loose connection at port on PC board.	Tighten the connection at port on PC board.
		Sensor is short-circuited.	Using multi-meter, measure resistance of the sensor. If the resistance is ≤ 100 ohms, change the sensor.
		PC board fault.	Replace PC board.
E6	Check DC Fan Motor	Operating beyond limits.	Check and correct external static pressure on the unit.
		DC motor fault.	Replace DC motor.
		PC board fault.	Replace PC board.
E7	EEPROM Error (Data Storage)	Chip or PC board fault.	Replace PC board.
E9	Communication Error Between Indoor Unit and Controller	Signal wires are short-circuited or disconnected.	Check or reconnect signal wires.
		Signal wires close to electromagnetic source.	Distance signal wires from electromagnetic source.
		PC board fault.	Replace PC board.
Eb	EEV Error	EEV wires are short-circuited or disconnected.	Check or reconnect signal wire.
		EEV stop.	Replace EEV.
		PC board fault.	Replace PC board.
Ed	Outdoor Unit Error	Outdoor unit fault.	Refer to outdoor unit troubleshooting guide.
EE	Condensate Overflow	Loose connection or disconnected at port on PC board.	Tighten the connection or reconnect at port on PC board.
		Condensate switch float is stuck.	Inspect the float.
		Trap slope is too steep.	Adjust the trap slope.
		Drain pipe is too long.	Adjust the length of the drain pipe.
		Drain pump faulty.	Replace the drain pump.
FE	No Address When Powered ON For First Time	Indoor unit without address.	Run automatic addressing option at the outdoor unit.
			Use remote wireless or wired controller to readdress the indoor unit.
UU	MDC In Auto System-Check Mode	MDC Fault.	Refer to MDC troubleshooting guide.

LEGEND

EEPROM — Electronically Erasable Programmable Read-only Memory
EEV — Electronic Expansion Valve
MDC — Multiport Distribution Controller
PC — Process Controller

Replacement Parts — Quote the unit model number and unit serial number when ordering replacement parts or contacting the factory about the unit. This information can be found on the serial plate attached to the unit. See Fig. 29.

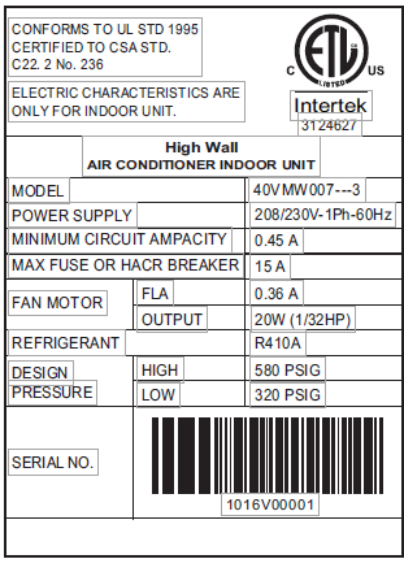

Fig. 29 — Unit Serial Plate (Example)

APPENDIX A — DIP DWITCH SETTINGS

There are two DIP switches on the main board. Figures A and B show the settings for each parameter controlled by a switch. Switches are shown in the default settings.

POSITION 1 — START-UP

OFF — Auto Addressing Mode (Default)
ON — Factory Test Mode

POSITION 2

OFF — Normal Mode (Default)
ON — Factory Self-Checking Mode

POSITION 3 — NOT USED

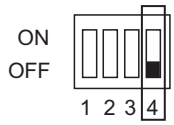

POSITION 4 — INDOOR UNIT IDENTIFICATION

OFF — Standard Indoor Unit (Default)
ON — Mode Priority Indoor Unit (HP Only)
(IDU address must be 63)

Fig. A — SW1 SETTINGS

POSITION 1, 2 — NOT USED

Fig. B —SW8 SETTINGS

© Carrier Corporation 2020