# VRF Indoor Unit
# 40VMW024---3 — High Wall

bryant®
Heating & Cooling Systems

# Submittal Data

Job Name _____ Location _____
Tag _____

**STANDARD FEATURES**

- Dual Guided Air Design Provides Smoother and More Comfortable Air Flow
- Three Fan Speeds - High, Medium and Low
- Front Panel Lifts Up 65 Degrees Providing Ease of Maintenance
- Heating Mode, Swing Angle for Louver is 68 to 110 Degrees in Auto Mode
- Non-Heating Mode, Swing Angle for Louver is 61 to 93 Degrees in Auto Mode
- Manual Setting for Louver, Swing Angle Between 61 and 110 Degrees
- Multi-Refrigerant Outlet Piping Methods - Left, Right or Rear
- Built in EXV (Electronic Expansion Valve) for Installation Ease

| Indoor Unit Model | | 40VMW024---3 |
|---|---|---|
| PERFORMANCE | | |
| Total Cooling Rated Capacity | Btu/h | 24,340 |
| Sensible Cooling Capacity | Btu/h | 15,330 |
| Total Heating Rated Capacity | Btu/h | 27,000 |
| Airflow (H / M / L) | CFM | 650 / 530 / 460 |
| Sound Pressure (H / M / L) | dBA | 43.2 / 42.0 / 36.8 |
| ELECTRICAL | | |
| Power Supply | V/Ph/Hz | 208-230/1/60 |
| Indoor Fan Motor Power Consumption (Input) | W | 75 |
| Minimum Circuit Amps | A | 0.86 |
| Maximum Overcurrent Protection | A | 15 |
| Motor Type | | DC |

| PHYSICAL DATA | | |
|---|---|---|
| Pipe Connection Size - Liquid | in. | 3/8 (OD) |
| Pipe Connection Size - Suction | in. | 5/8 (OD) |
| Pipe Connection Size - Drain | in. | 3/4 NPT (OD) |
| Refrigerant | | R-410A |
| Unit Width | in. | 47 |
| Unit Height | in. | 13-1/2 |
| Unit Depth | in. | 10-1/8 |
| Unit Net Weight | lb | 38 |

**ACCESSORIES (Optional)**

- ☐ Wireless Remote Controller 40VM900001
- ☐ Wired Remote Controller - Non-Prog. 40VM900012
- ☐ Wired Remote Controller - Prog. 40VM900013
- ☐ Touch Screen Wired Controller 40VM900005
- ☐ Touch Screen Central Controller 40VM900006

**Manufacturer reserves the right to discontinue, or change at any time, specifications or designs without notice and without incurring obligations.**

# DIMENSIONAL DRAWING
# INDOOR UNIT HIGH WALL 40VMW024---3

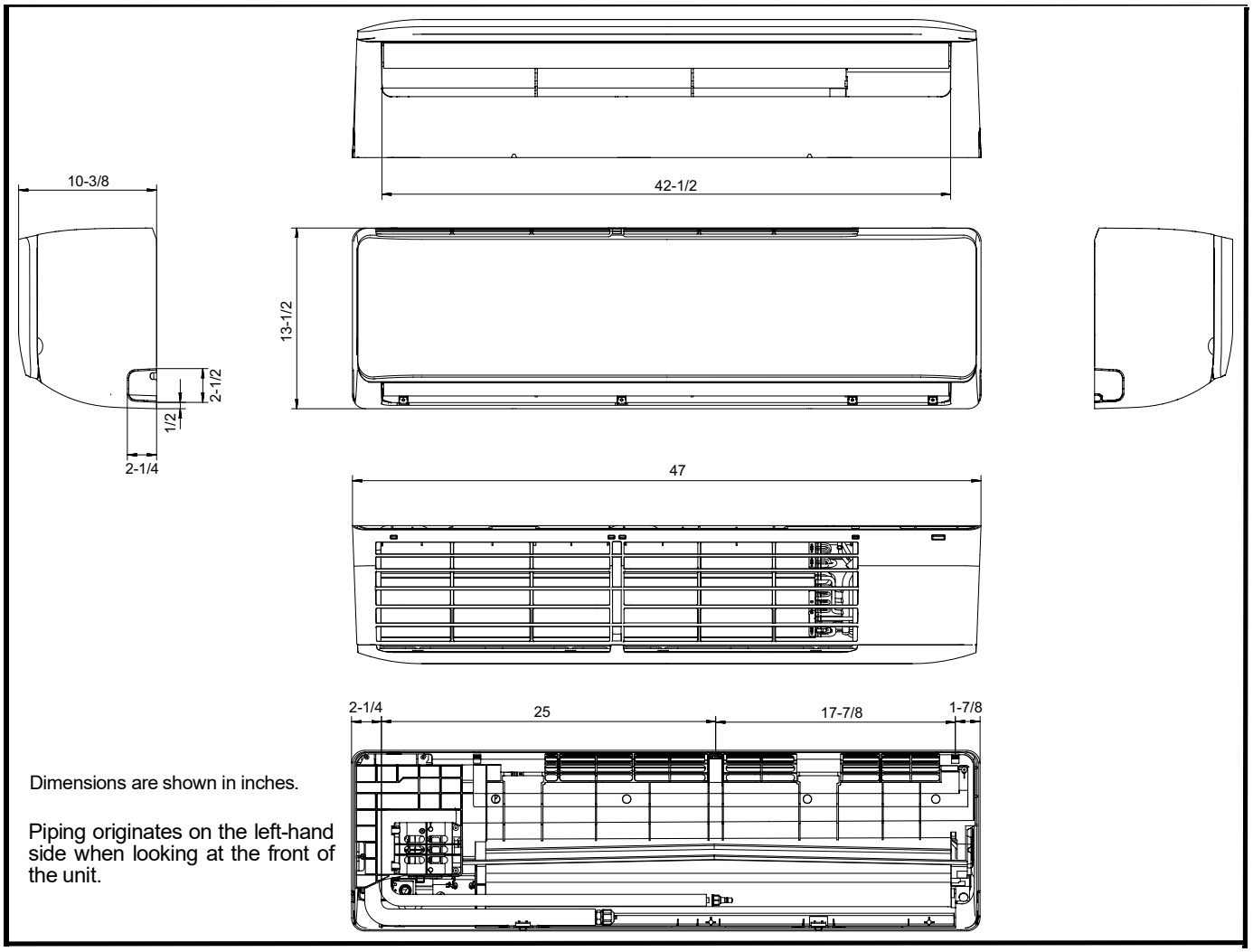


Dimensions are shown in inches.

Piping originates on the left-hand side when looking at the front of the unit.

# MOUNTING PLATE
# INDOOR UNIT HIGH WALL 40VMW024---3

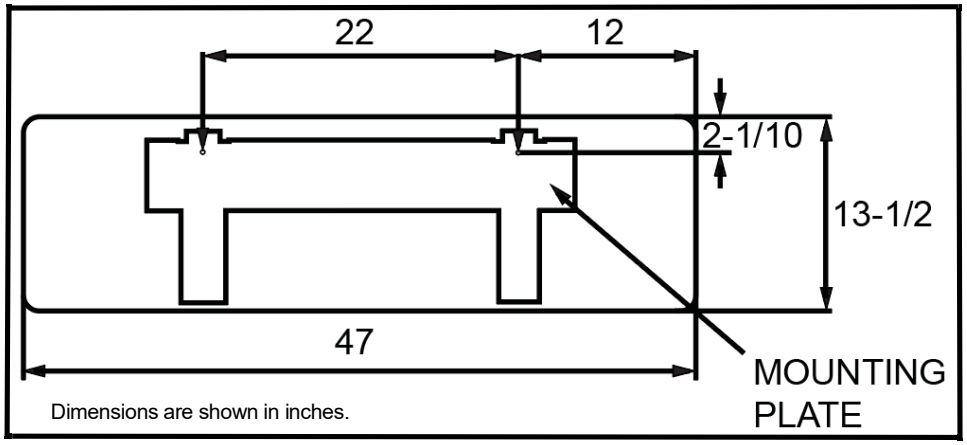


Dimensions are shown in inches.

© Bryant Heating & Cooling Systems 2020