THIS DOCUMENT IS THE PROPERTY OF CARRIER CORPORATION AND IS DELIVERED UPON THE EXPRESS CONDITION THAT THE CONTENTS WILL NOT BE DISCLOSED OR USED WITHOUT CARRIER CORPORATION'S WRITTEN CONSENT.

SUBMISSION OF THESE DRAWINGS OR DOCUMENTS DOES NOT CONSTITUTE PART PERFORMANCE OR ACCEPTANCE OF CONTRACT.

ComfortID™ INTERMITTENT FAN POWERED—WITH PROPORTIONAL ELECTRIC HEAT CARRIER CONTROL PACKAGE NO. 4754

Application:

Intermittent fan powered terminals are designed to provide heating and cooling for perimeter zones. These terminals are also used in interior zones, where a combination of primary air mixed with recirculated air provides increased air movement and improved ventilation. A typical application is shown in Fig. 1. Design, load requirements, downstream (external) static pressure, fan performance and sound level acceptability govern terminal selection and sizing. The terminal fan performance is selected to provide sufficient pressure to overcome the coil pressure drop and external static pressure. (It is important that the correct fan and fan speed be selected to ensure that sufficient airflow is available for the electric heat coil.) The controls provide variable air volume (VAV) control of the primary air for cooling and operate a proportional electric heating coil to supplement fan-induced plenum heat during heating. If enabled, a control option can energize the fan during cooling when the zone's cooling load falls below a user-adjustable minimum airflow set point. This feature prevents cold air 'dumping' from the diffusers, while providing improved ventilation at a lower minimum cooling airflow set points. (The fan set point is set to a CFM value slightly above the minimum cooling CFM set point.) When the primary air source is cooling, should the zone require heat, the fan operates to draw in air from the ceiling plenum to provide heat to the zone. The fan operates to provide ceiling plenum heat, and in addition, the proportional electric heat operates as required to supplement this heat. A wall-mounted space temperature (SPT) sensor located in each zone will sense load requirements and activate the control sequence to accommodate cooling or heating. This control package provides the following sequences of operation:

A. Cooling:

   Refer to numbers on flow diagram. See Fig. 2.

   1. Between 1 and 2, the maximum primary airflow is established by the user-defined maximum cooling airflow set point until the zone comes under control at 2. The fan is disabled.
   2. Beginning at 2, the primary airflow is regulated over a throttling range by the damper until the minimum cooling airflow set point is reached at 3. (It must be noted that the minimum cooling airflow set point could be set to zero by the user. In this case, the damper will fully close if the zone temperature continues to fall.) Optionally, as the primary airflow is reduced, the fan operates to increase air circulation and improve ventilation when the primary airflow falls below the user-defined airflow set point.
   3. Between 3 and 4, should the zone temperature continue to fall, the damper will hold the user-defined minimum cooling airflow set point.

B. Auxiliary electric heating when the primary air source is providing cooling:

   Refer to numbers on flow diagram. See Fig. 2.

   1. Should the zone temperature fall below the occupied heating set point, the Occupied Heating mode is in effect at 4.

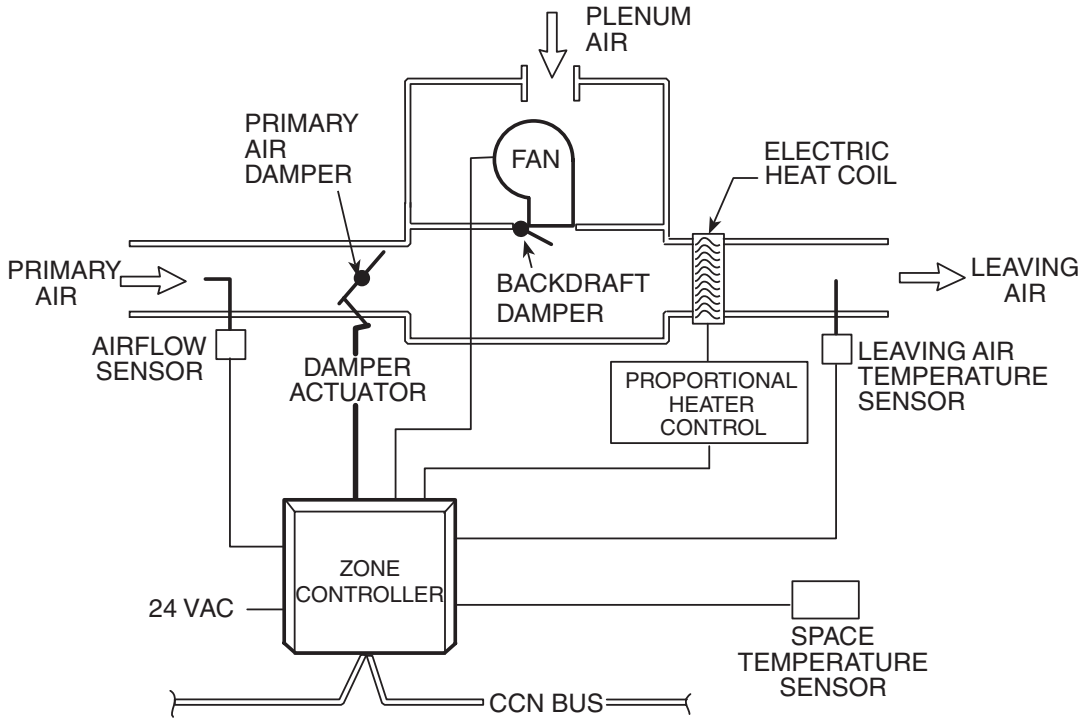

Figure 1 — Intermittent Fan Powered Air Terminal with Proportional Electric Heat

2. The fan is energized to induce heated plenum air to warm the zone.
3. After supplying plenum heat for the user-specified heat delay, if the heat was insufficient to raise the zone's temperature, then at 5, the proportional electric heat will modulate to provide the necessary heat to the zone. The heater is controlled so as not to exceed the maximum discharge temperature. During the Heating mode, the primary airflow is maintain at the user-defined minimum cooling airflow set point.
4. When the zone temperature rises above the occupied heating set point, the heater output is reduced to zero. After an adjustable delay has expired, the fan is disabled and the Ventilation mode is activated at 4.

C. Heating when the primary air source is providing heated air:

Refer to numbers on flow diagram. See Fig. 2.

1. Upon receiving a heating signal generated by the air source equipped with CCN (Carrier Comfort Network®) controls (or a primary air temperature sensor is installed to detect that the air source is heating), should the zone temperature fall below the occupied heating set point, the Heating mode is in effect at 4'.
2. The damper will maintain the minimum heating airflow set point at 4'. The fan will be energized and the proportional electric heat will modulate as required to supplement the induced air heat from the ceiling plenum.
3. The control may be configured to provide variable volume heating. In that case the damper is throttled between the user-defined minimum heating airflow set point at 4' and the user-defined maximum heating airflow set point at 6. The fan will operate during this cycle. If VAV heating is enabled, it is important to limit the maximum heating set point so that the combined airflow of both the fan and the maximum heating set point do not exceed the maximum for the zone's diffusers.

D. Morning warm-up (configured to provide constant volume heating):

Upon receiving a morning warm-up signal generated by the air source equipped with CCN controls, the primary air damper will maintain the minimum heating airflow set point. The terminal fan will operate to provide plenum air to the space and the proportional electric heat will modulate as required to supplement the plenum heat. The heater is controlled so as not to exceed the maximum discharge temperature. The control may be configured to provide variable volume heating. In that case the damper is throttled between the user-defined minimum heating airflow set point at 4' and the user-defined maximum heating airflow set point at 6. The fan will operate during this cycle. If VAV heating is enabled, it is important to limit the maximum heating set point so that the combined airflow of both the fan and the maximum heating set point do not exceed the maximum for the zone's diffusers.

E. Unoccupied time period (cooling):

When the unoccupied period is reached, the user-defined occupied cooling set point is reset upward to a user-defined unoccupied cooling set point. If the primary air source is operating, the primary air damper will throttle in the same manner (as per A) during the unoccupied period, using the unoccupied cooling set point.

F. Unoccupied time period (auxiliary electric heating when the air source is off):

When the unoccupied period is reached, the user-defined occupied heating set point is reset downward to a user-defined unoccupied heating set point. If the zone's temperature falls below the unoccupied heating set point, the Unoccupied Heating mode is in effect. The terminal fan will start and the primary air damper will fully close. The proportional electric heat will modulate to supplement the plenum air heat as required. When the zone's temperature rises above the unoccupied heating set point, the heater output is reduced to zero. After the user-defined fan delay has expired, the fan will be disabled. The primary air damper will then be

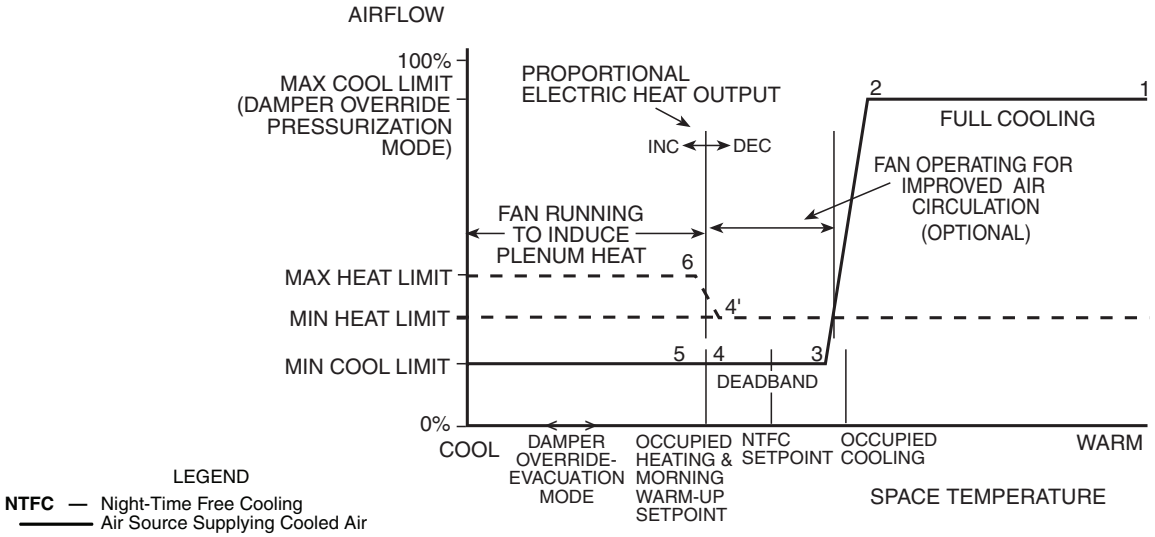

Figure 2 — Sequence of Operation for Intermittent Fan Powered Air Terminal with Proportional Electric Heat

opened to at least 50% to allow the primary air source to properly start.

G. Unoccupied time period (heating):

When the unoccupied period is reached, the user-defined occupied heating set point is reset downward to a userdefined unoccupied heating set point. The primary air damper will operate in the same manner (as per C) during the unoccupied period, using the unoccupied heating set point.

H. Demand controlled ventilation (option):

This mode is initiated when the zone is occupied and the air source is not heating. It occurs when the CCN control receives a cooling signal from the air source equipped with CCN controls, or when a primary air temperature sensor is installed to detect the air source operation is cooling. The control will monitor a CO_2 sensor (optional) and determine if ventilation is adequate. The zone CO_2 level is compared to the ventilation set point. If the CO_2 level is above the set point (insufficient ventilation), the airflow set point is increased appropriately to maintain proper ventilation. Should the zone's temperature fall below the heating set point, the control will suspend ventilation override until the zone's temperature recovers. If after supplying plenum heat for the user-specified heat delay, the heat was insufficient to raise the zone's temperature, then heating will be enabled and will operate as per B.

I. Humidity control (option):

This mode is initiated when the zone is occupied and the primary air source is cooling. It occurs when the CCN control receives a cooling signal from the air source equipped with CCN controls, or when a primary air temperature sensor is installed to detect the air source operation is cooling. The control will monitor a relative humidity (RH) sensor (optional) and determine if the zone's RH is above the humidity set point. If the RH level is above the RH set point, the airflow control point is increased to displace the humid air in the space with air from the primary air source (which has a lower dew point). To ensure non-simultaneous operation of both heating and cooling, should the increased airflow cause the zone's temperature to fall below the heating set point, the control will first suspend the airflow override and reduce the airflow to the minimum cooling set point. The fan will operate to induce plenum air heat to warm the zone. If after supplying plenum heat for the user-specified heat delay, the heat was insufficient to raise the zone's temperature, then heating will be enabled and will operate as per B. The airflow override will resume when the zone's temperature recovers and be disabled once the zone's RH level falls below the zone's RH set point.

J. Damper override:

The damper override function is energized through the use of a field-supplied smoke control panel connected to the air source equipped with CCN controls. The smoke control panel and installation must be in accordance with UL864 and local codes. The damper override function overrides the airflow setting used by the logic. It will cause the terminal to provide the configured maximum cooling airflow when the air source is in the Pressurization mode, and to disable the fan (if operating) and fully close the primary air damper when the air source is in the Evacuation mode.

K. Nighttime free cooling:

The logic calculates a nighttime free cooling (NTFC) temperature set point halfway between the occupied heating and occupied cooling temperature set points. Upon receiving a NTFC signal generated by the air source equipped with CCN controls (or a primary air temperature sensor is installed to detect the air source is operating in the NTFC mode), the primary air damper will modulate between the maximum and minimum cooling airflow set points to maintain the zoneís NTFC temperature set point. The terminal fan will remain off.

L. Primary air source shuts off:

1. The fan will be disabled unless the zone temperature falls below the heating set point (refer to C).
2. The damper will fully close and the control will recalibrate the airflow transducer.
3. If the primary air source remains off (no primary air), the damper will be repositioned to 50% open to allow the air source to restart.

CODE	Carrier A United Technologies Company	THIS DOCUMENT IS THE PROPERTY OF CARRIER CORPORATION AND IS DELIVERED UPON THE EXPRESS CONDITION THAT THE CONTENTS WILL NOT BE DISCLOSED OR USED WITHOUT CARRIER CORPORATION'S WRITTEN CONSENT.	SUBMISSION OF THESE DRAWINGS OR DOCUMENTS DOES NOT CONSTITUTE PART PERFORMANCE OR ACCEPTANCE OF CONTRACT.	**ComfortID™ INTERMITTENT FAN**	**45 MC,NC, RC**
CATALOG #					

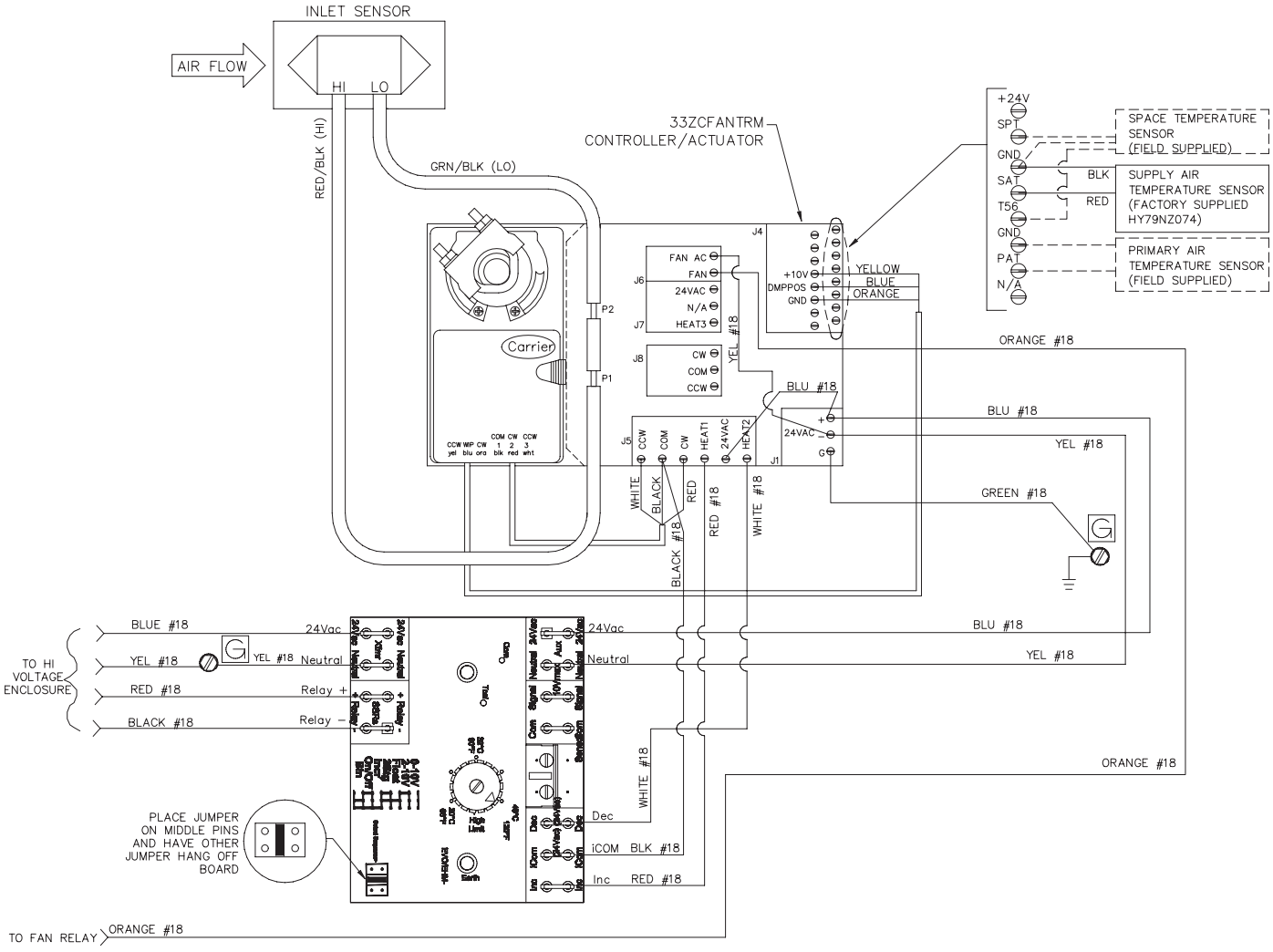

LEGEND

CCW	—	Counterclockwise
COM	—	Common
CW	—	Clockwise
DMPPOS	—	Damper Position
GND	—	Ground
PAT	—	Primary Air Temperature Sensor
SAT	—	Supply Air Temperature Sensor
SPT	—	Space Temperature Sensor
– – – –		Field-Supplied Wiring
———		Factory Wiring

NOTES:

1. For 45M/N units, the actuator is configured CW to close. For 45R units, the actuator is configured CCW to close.
2. CAUTION: Electric shock may result. Disconnect prior to servicing unit.
3. These controls have been wired to comply with UL-1995.

PRODUCT INFORMATION IS SUBJECT TO CHANGE WITHOUT NOTICE. 06/15/2007

JOB NAME	JOB NUMBER	LOCATION	PAGE NUMBER	DRAWING NUMBER
BUYER	BUYER #	SHEET	**4 OF 4**	**45M/N/R-C-4754**