VRF Multiport Distribution Controller (MDC) 40VMD008S--3 — Sub MDC

bryant
Heating & Cooling Systems

Submittal Data

Job Name _____ Location _____
Tag _____

STANDARD FEATURES

- Allows the connection of multiple indoor units to the Heat Recovery VRF system
- MDC allows up to 8 zones
- Main MDCs have refrigerant ports that feed sub MDCs (if used)
- Heat Recovery VRF System can support one Main MDC and two sub MDCs, maximum
- Separate 208-230/1/60 power required
- MDC ports may be twinned to serve high-capacity units (sizes greater than 54 kBtu/h)
- MDC has individual “home run” communication port plugs for each indoor unit
- Liquid and gas pipe adapters are provided with MDCs to accommodate various indoor unit capacities
- High-pressure, low-pressure, and gas pipe adapters are provided with Sub MDCs to accommodate various MDC total capacities

MDC UNIT MODEL		40VMD008S--3
NUMBER OF PORTS		8
MAX CAPACITY PER INDOOR UNIT PORT	**kBtu/h**	54
ELECTRICAL		
Power Supply	**V-Ph-Hz**	208/230-1-60
Minimum Circuit Amps	**A**	0.85
Maximum Overcurrent Protection	**A**	15
Motor Type		DC
Power Wiring		Sized per NEC and local codes based on nameplate electrical data
Signal Wiring		2-core shielded twisted pair cable 18 AWG
DESIGN PRESSURE, HIGH/LOW	**psig**	580/320
DRAINAGE WATER PIPE DIAMETER, OD	**in.**	1
PIPE SIZE - MAIN MDC TO SUB MDC		
High Pressure (Gas)	**in.**	5/8 - 7/8
Low Pressure (Gas)	**in.**	3/4 - 1-1/8
Liquid	**in.**	3/8 - 5/8

PIPE SIZE - SUB MDC TO IDU		
Liquid	**in.**	1/4 - 3/8
Gas	**in.**	1/2 - 7/8
PHYSICAL DATA		
Refrigerant		R-410A
Unit Dimensions (W x H x D)	**in.**	37 x 12-7/8 x 22-5/8
Packing Dimensions (W x H x D)	**in.**	44-1/2 x 18 x 33-1/8
Net Weight	**lb**	130

LEGEND
AWG — American Wire Gage
IDU — Indoor Unit
MDC — Multiport Distribution Controller
NEC — National Electrical Code
ODU — Outdoor Unit

Manufacturer reserves the right to discontinue, or change at any time, specifications or designs without notice and without incurring obligations.

DIMENSIONAL DRAWING
SUB MDC 40VMD008S--3

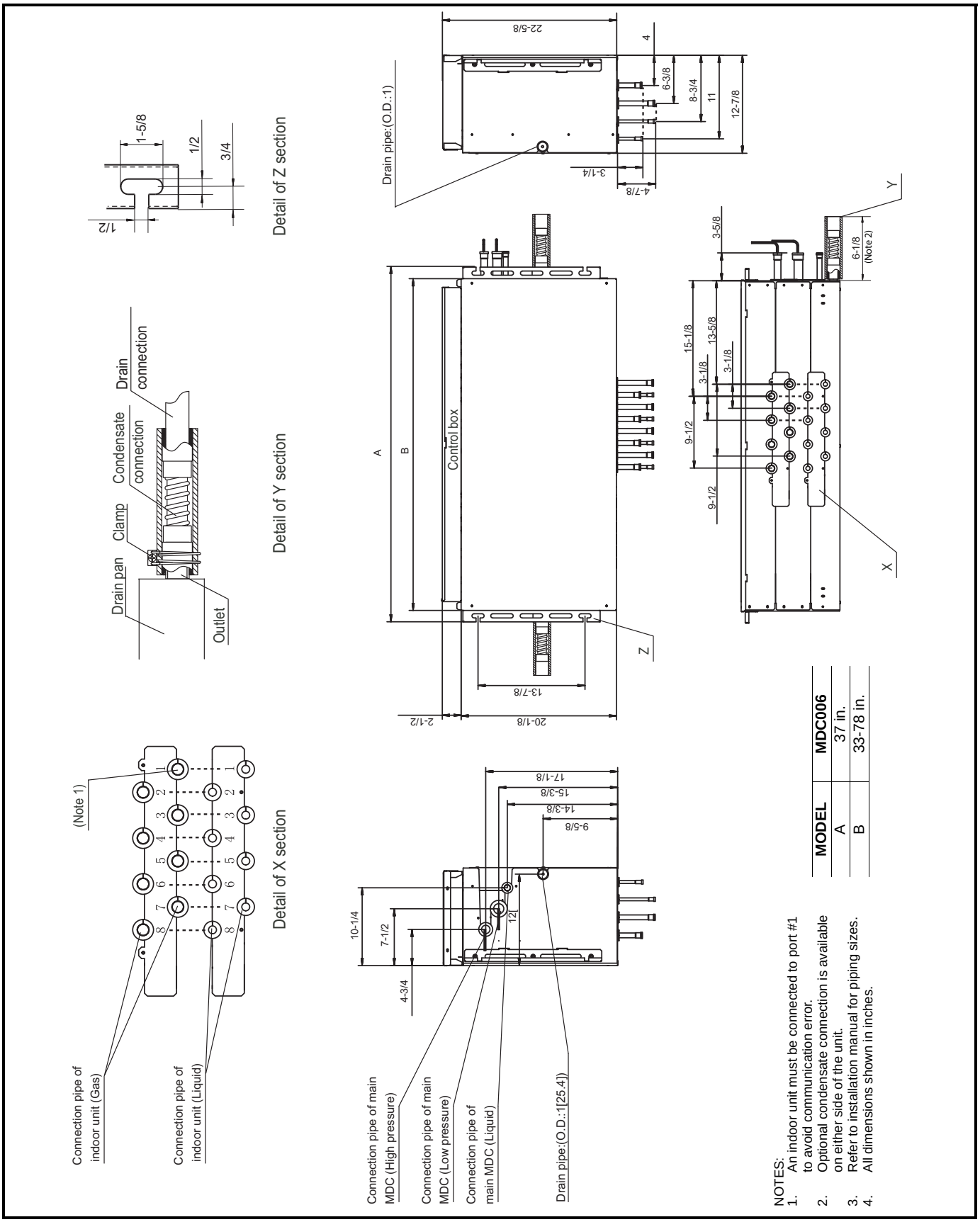

RECOMMENDED SERVICE CLEARANCE

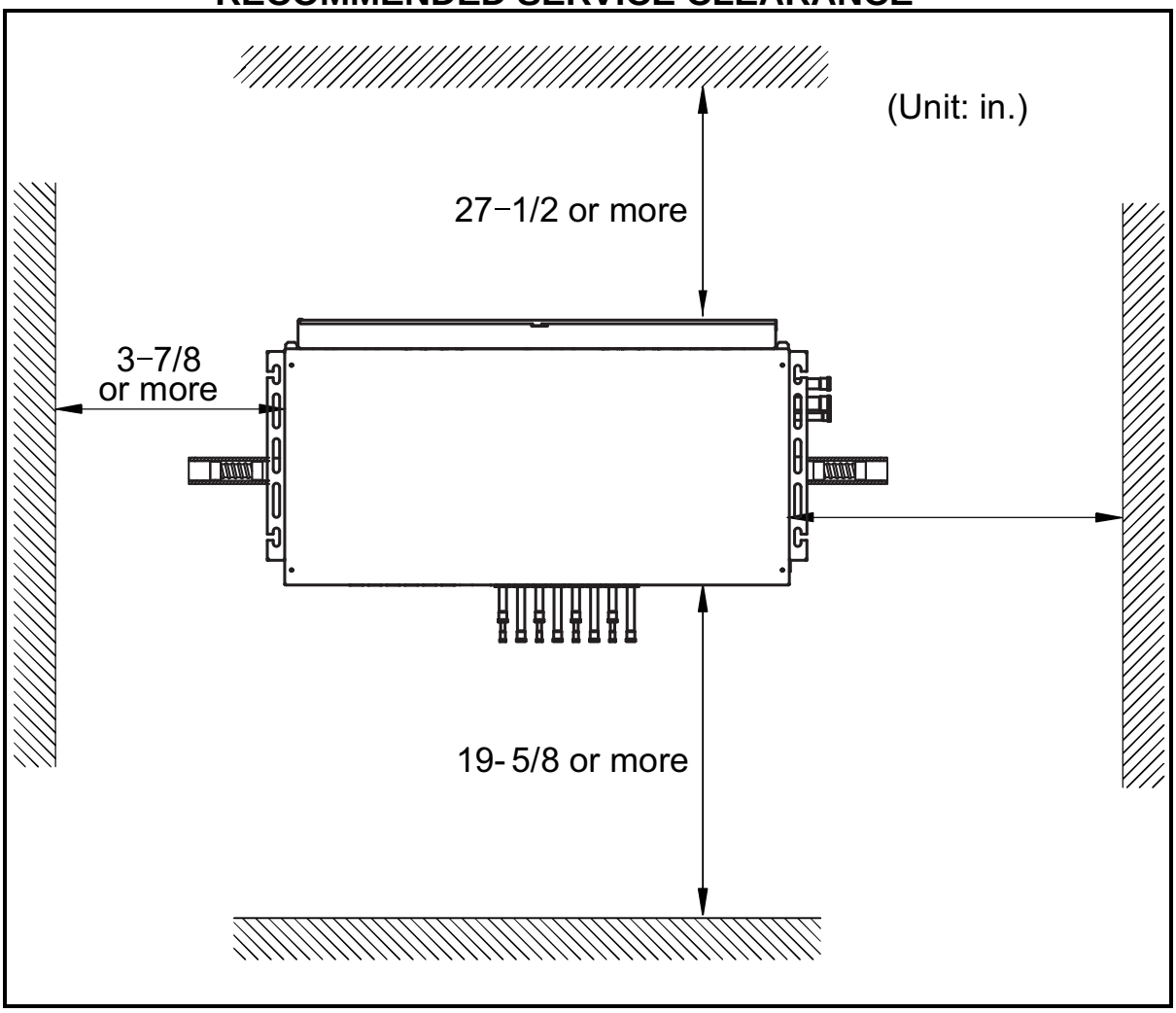

RECOMMENDATION FOR GRAVITY DRAIN INSTALLATION

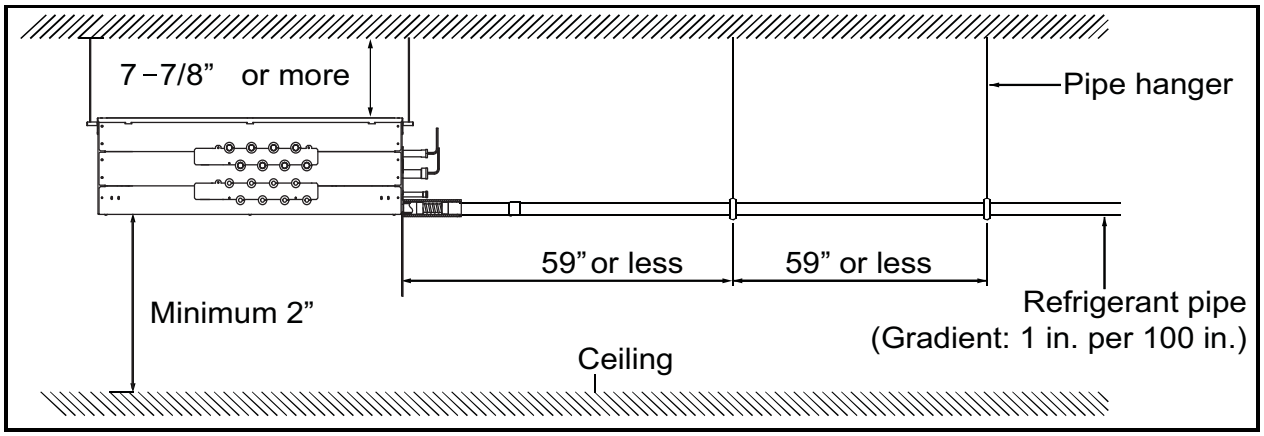

© Bryant Heating & Cooling Systems 2019