REVISIONS				
SYM	E C O NUMBER	BY	DATE	APPVD
A	K0001583	BSR	1/07	BSR

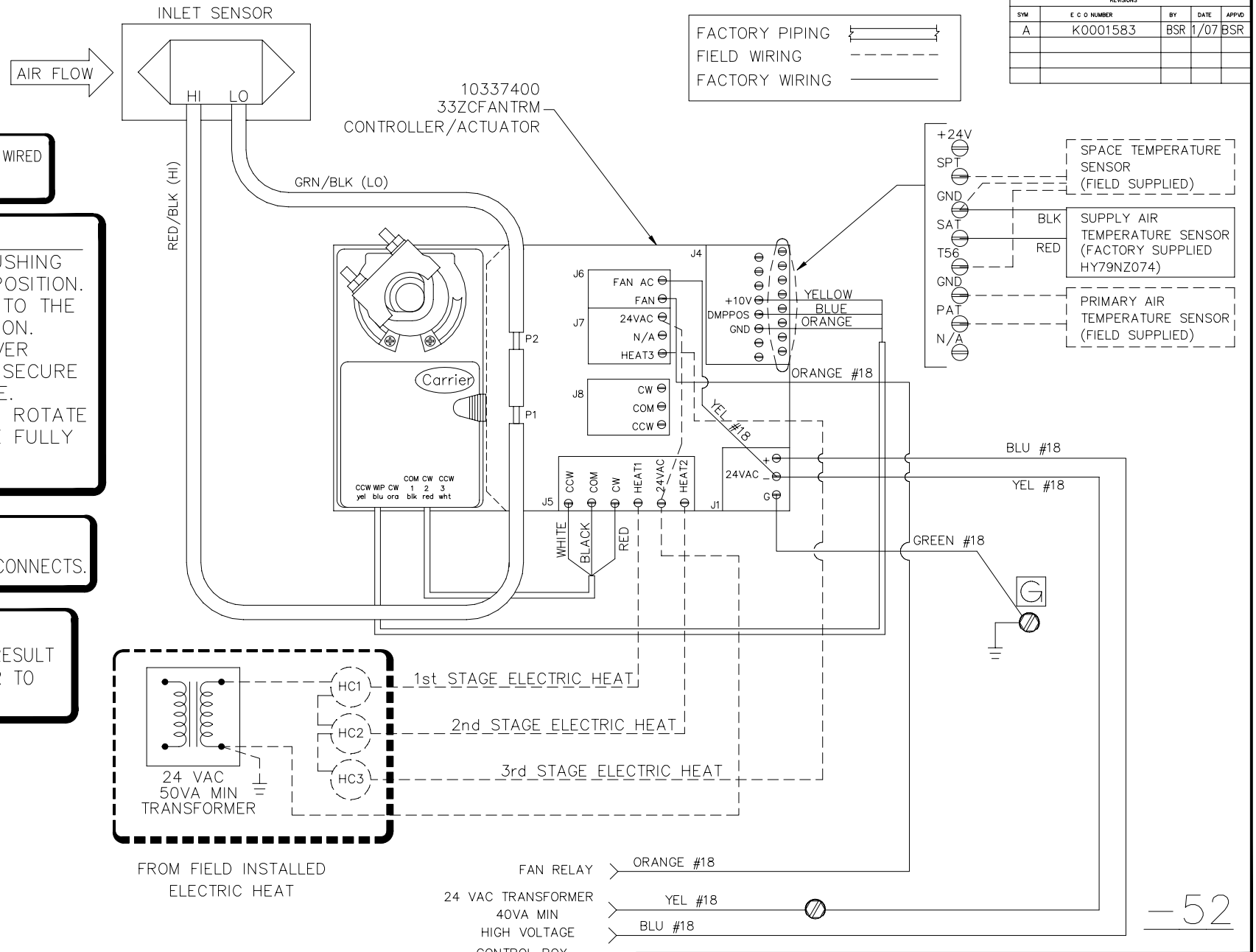

THESE CONTROLS HAVE BEEN WIRED TO COMPLY WITH UL-1995.

ACTUATOR NOTE:

VERIFY ACTUATOR BUSHING IS IN THE FULL CW POSITION. ROTATE DAMPER CW TO THE FULLY CLOSED POSITION. MOUNT ACTUATOR OVER DAMPER SHAFT AND SECURE TO SHAFT ENCLOSURE. ENGAGE CLUTCH AND ROTATE DAMPER CCW TO THE FULLY OPEN POSITION.

SHOP NOTE:

USE INSULATED QUICK CONNECTS.

CAUTION:

ELECTRIC SHOCK MAY RESULT DISCONNECT UNIT PRIOR TO SERVICING UNIT.

-52

THIS DOCUMENT AND ITS CONTENTS REMAIN THE EXCLUSIVE PROPERTY OF CARRIER CORPORATION AND IS DELIVERED UPON THE THE EXPRESS CONDITION THAT THE CONTENTS WILL NOT BE DISCLOSED OR USED WITH CARRIER CORPORATION'S WRITTEN CONSENT

MATERIAL

BLANK SIZE

FINISH

NEXT ASSY | USED ON

APPLICATION

DRAWN BY BSR DATE 1/07

CKD

APPVD BSR

UNLESS OTHERWISE SPECIFIED

ALL DIMENSIONS IN INCHES
[ ] = MILLIMETERS
TOLERANCES
FRACTIONAL ± 1/32 [.794]
DECIMAL ± .010 [.254]
ANGULAR ± 1°
REMOVE BURRS AND SHARP EDGES

DO NOT SCALE THIS DRAWING

UNITED TECHNOLOGIES CARRIER
PO BOX 4808
SYRACUSE, NY 13221

TITLE 45M,N,R WIRING DIAGRAM
4752 DIGITAL VAR. VOL.
UP TO 3 STAGE EH-HEAT

SCALE	SIZE	DRAWING NO	REV	SHEET
NA	C	775005-52	A	1/4