VRF Indoor Unit
40VMM015---3 — Medium Static Duct

bryant
Heating & Cooling Systems

Submittal Data

Job Data _____ Location _____
Buyer _____ Buyer PO # _____ Carrier # _____
Unit Number _____ Model Number _____
Performance Data Certified By _____ Date _____

STANDARD FEATURES

- Rear Return Air Opening is Standard and Bottom Return is optional
- Three Fan Speeds – High, Medium and Low
- Knockout for Outside Air
- Built-in Condensate Lift Mechanism
- Built-in EXV (Electronic Expansion Valve) for Installation

Indoor Unit Model		40VMM015---3
PERFORMANCE		
Cooling Rated Capacity	Btu/h	15,000
Heating Rated Capacity	Btu/h	17,000
Airflow (H / M / L)	CFM	462 / 385 / 326
Sound Pressure (H / M / L)	dBA	38.5 / 34.5 / 31.6
ELECTRICAL		
Power Supply	V/Ph/Hz	208-230/1/60
Indoor Fan Motor Power Consumption (Input)	W	140
Minimum Circuit Amps	A	3.13
Maximum Overcurrent Protection	A	15
Motor Type		DC

PHYSICAL DATA		
Pipe Connection Size - Liquid	in.	1/4 (OD)
Pipe Connection Size - Suction	in.	1/2 (OD)
Pipe Connection Size - Drain	in.	3/4 (OD)
Maximum External Static Pressure (ESP)	in. wg	0.6
Refrigerant		R-410A
Unit Width	in.	39-3/4
Unit Height	in.	10-5/8
Unit Depth	in.	25
Unit Net Weight	lbs.	76

ACCESSORIES (Optional)

- ☐ Wireless Remote Controller 40VM900001
- ☐ Wired Remote Controller - Non-Prog. 40VM900002
- ☐ Wired Remote Controller - Prog. 40VM900003
- ☐ Centralized Controller 40VM900004
- ☐ Touch Screen Wired Controller 40VM900005
- ☐ Touch Screen Central Controller 40VM900006

Manufacturer reserves the right to discontinue, or change at any time, specifications or designs without notice and without incurring obligations.

DIMENSIONAL DRAWING
INDOOR UNIT MEDIUM STATIC DUCT 40VMM015---3

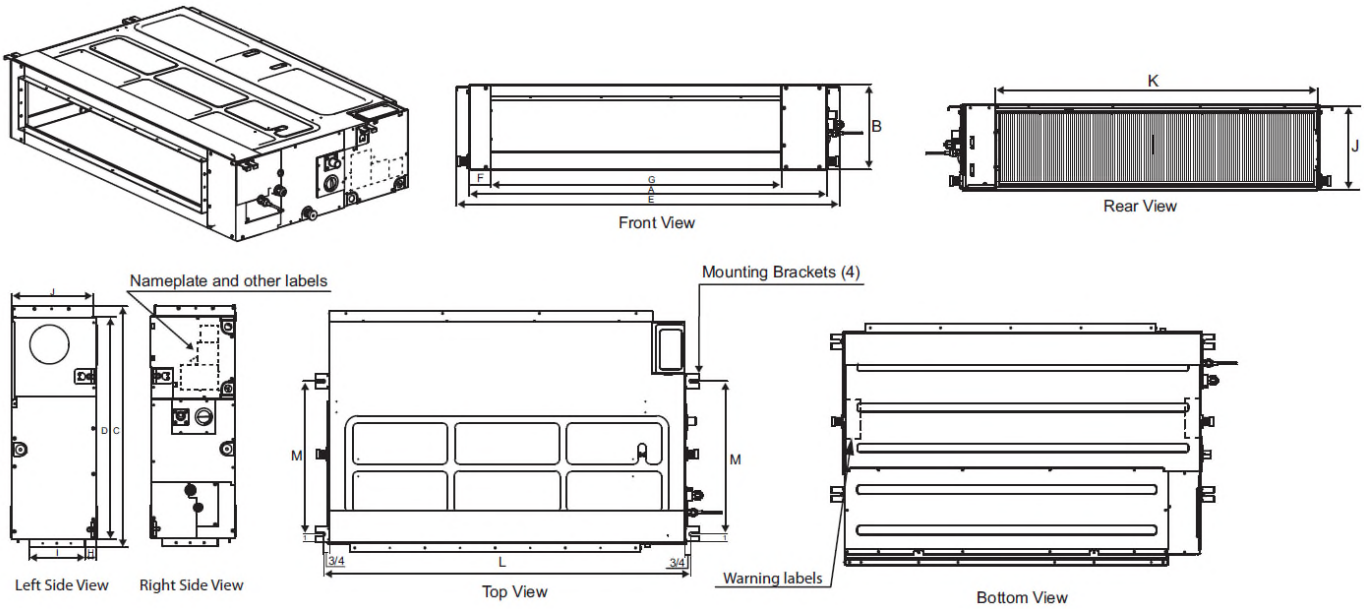

40VMM UNIT SIZE	DIMENSION (in.)												
	A	B	C	D	E	F	G	H	I	J	K	L	M
015	36-1/4	10-5/8	25	22-1/2	39-3/4	2-5/8	28	1-3/8	7	10-1/4	32	37-3/4	13-3/4

NOTE: All dimensions shown in inches.

© Bryant Heating & Cooling Systems