38VMH072-432
Outdoor Unit for
Variable Refrigerant Flow (VRF) Systems

Service Manual

© 2021 Carrier. All rights reserved.
Edition Date: 07/21
Form No: 38VMH-4SM
A Carrier Company
Printed in USA
Replaces: 38VMH-3SM

Manufacturer reserves the right to discontinue, or change at any time, specifications or designs without notice and without incurring obligations.

TABLE OF CONTENTS

GENERAL INFORMATION....3
Model Number Nomenclature....3
Capacity Range....4
External Appearance....5
Refrigerant Charge Calculation....6
REFRIGERANT CIRCUIT....7
Refrigerant Circuit Diagram....7
Functional Parts Layout....10
Refrigerant Flow for Each Operational Mode....12
FUNCTION AND CONTROL....20
Operation Mode....20
Basic Control....21
SPECIAL CONTROL....30
Startup Control....30
Oil Return Operation....30
Overload Control....32
Stopping Operation....32
PROTECTION CONTROL....34
High Pressure Protection Control....34
Low Pressure Protection Control....34
Discharge Pipe Protection Control....34
Inverter Protection Control....35
OTHER CONTROL....36
FIELD SETTINGS....37
Instruction on Advanced Operation Mode....38
How to Set Advanced Mode Codes....38
TROUBLESHOOTING....41
APPENDIX....76
Wiring Diagram....76
Electronic Control Box Layout....80
BILL OF MATERIAL (BOM)....91
38VMA072HDS5-1, 38VMA096HDS5-1, 38VMA120HDS5-1....91
38VMA144HDS5-1....95
38VMA072HDS6-1, 38VMA096HDS6-1, 38VMA120HDS6-1....100
38VMA144HDS6-1....104

GENERAL INFORMATION

Model Number Nomenclature

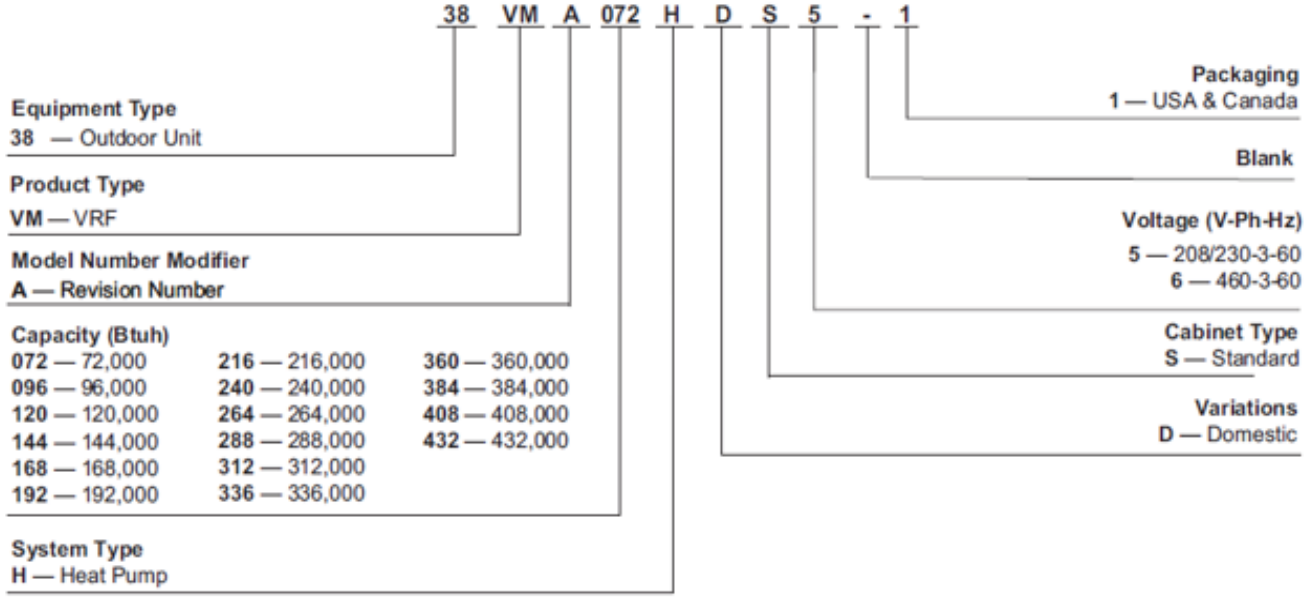

Fig. 1 —Model Number (Outdoor Units)

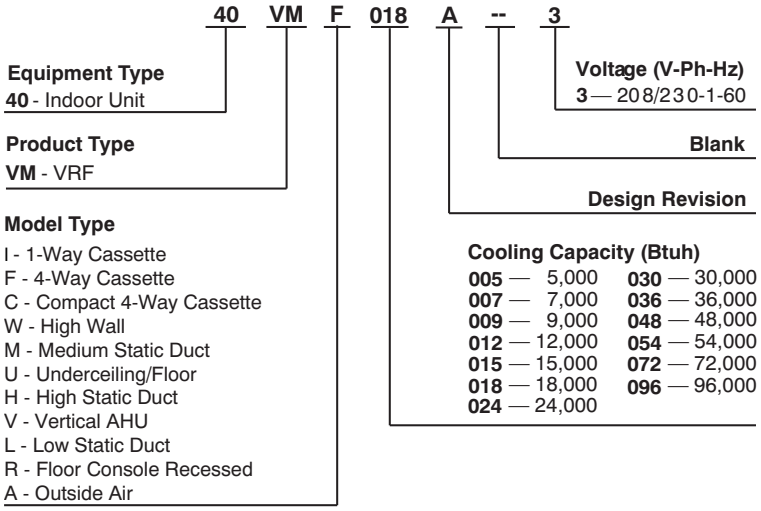

Fig. 2 —Model Number (Indoor Units)

Table 1 —Indoor Unit Capacity Chart

CONNECTABLE INDOOR UNIT CAPACITY INDEX *		5	7	9	12	15	18	24	30	36	48	54	72	96
Outside air	40VMA									•	•	•	•	•
1-way cassette	40VMI	•	•	•	•	•	•	•						
4-way cassette	40VMF			•	•	•	•	•	•	•	•			
Compact 4-way cassette	40VMC	•	•	•	•	•								
High wall	40VMW	•	•	•	•	•	•	•	•					
Low static duct	40VML		•	•	•	•	•	•						
Medium static duct	40VMM		•	•	•	•	•	•	•	•	•			
High static duct	40VMH							•	•	•	•	•	•	•
Vertical AHU	40VMV				•		•	•	•	•	•	•		
Underceiling/floor	40VMU				•	•	•	•	•	•	•			
Floor console recessed	40VMR		•	•	•	•	•	•						

* For example: The capacity index of 40VMF009A--3 and 40VMV024 is 9 and 24 respectively.

Capacity Range

$$\text{Connected Capacity Ratio} = \frac{\text{Total capacity index of the indoor units}}{\text{Capacity index of the outdoor units}}$$

Keep a proper connected capacity ratio for the entire system.

Table 2 —Connected Capacity Ratio

MINIMUM COMBINATION RATIO	MAXIMUM COMBINATION RATIO			
	40VMH for all IDUs *1, 40VMV for all IDUs	40VMA connected with other IDUs	At least one 40VMH*1 or 40VMV connected	Other indoor unit models
50%	100%	100%*2	130%*3	135%

NOTES:

*1 When 40VMH048, 054, 072, 096---3 is installed.

*2 When outside air units (40VMA) and standard indoor units are connected, the total capacity index of the 40VMA must be limited to 30% or less of the capacity index of the outdoor unit.

External Appearance

OUTDOOR UNITS LINEUP

Outdoor unit capacity range is from 6 to 36 Ton. Maximum number of connectable indoor unit is 64 with connected capacity ratio up to 135%.

Fig. 3 —6-12 Ton (Single Module)

Fig. 4 —14-24 Ton (Dual Module)

Fig. 5 —26-36 Ton (Triple Module)

INDOOR UNITS LINEUP

Fig. 6 —4-Way Cassette (40VMF)

Fig. 7 —Compact 4-Way Cassette (40VMC)

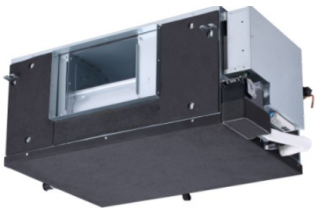

Fig. 8 —High Static Duct (40VMH)

Fig. 9 —High Wall (40VMW)

Fig. 10 —Low Static Duct (40VML)

Fig. 11 —Medium Static Duct (40VMM)

Fig. 12 —Underceiling / Floor (40VMU)

Fig. 13 —Floor Console Recessed (40VMR)

Fig. 14 —Vertical AHU (40VMV)

Fig. 15 —Outside Air (40VMA)

One-Way Cassette (40VMI)

Table 2 —Combination Table

CAPACITY (TON)	STANDARD COMBINATION			MAXIMUM QUANTITY OF CONNECTABLE INDOOR UNITS
	MODEL (208/230V-3PH-60HZ)	MODEL (460V-3PH-60HZ)	COMBINATION TYPE	
6	38VMA072HDS5-1	38VMA072HDS6-1	6	13
8	38VMA096HDS5-1	38VMA096HDS6-1	8	16
10	38VMA120HDS5-1	38VMA120HDS6-1	10	20
12	38VMA144HDS5-1	38VMA144HDS6-1	12	26
14	38VMA168HDS5-1	38VMA168HDS6-1	6 + 8	29
16	38VMA192HDS5-1	38VMA192HDS6-1	8 + 8	33
18	38VMA216HDS5-1	38VMA216HDS6-1	8 + 10	36
20	38VMA240HDS5-1	38VMA240HDS6-1	10 + 10	39
22	38VMA264HDS5-1	38VMA264HDS6-1	12 + 10	46
24	38VMA288HDS5-1	38VMA288HDS6-1	12 + 12	50
26	38VMA312HDS5-1	38VMA312HDS6-1	10 + 8 + 8	53
28	38VMA336HDS5-1	38VMA336HDS6-1	10 + 10 + 8	56
30	38VMA360HDS5-1	38VMA360HDS6-1	10 + 10 + 10	59
32	38VMA384HDS5-1	38VMA384HDS6-1	12 + 10 + 10	63
34	38VMA408HDS5-1	38VMA408HDS6-1	12 + 12 + 10	64
36	38VMA432HDS5-1	38VMA432HDS6-1	12 + 12 + 12	64

Refrigerant Charge Calculation

Based on the field installed refrigerant pipe and system layout, additional refrigerant charge may be required. Add additional refrigerant based on the calculation below.

R*= [Total length of liquid pipe size at 7/8 in. (ft) × 0.255 (lbs/ft)] + [Total length of liquid pipe size at 3/4 in. (ft) × 0.181 (lbs/ft)] + [Total length of liquid pipe size at 5/8 in. (ft) × 0.120 (lbs/ft)]

+ [Total length of liquid pipe size at 1/2 in. (ft) × 0.080 (lbs/ft)] + [Total length of liquid pipe size at 3/8 in. (ft) × 0.040 (lbs/ft)] + [Total length of liquid pipe size at 1/4 in. (ft) × 0.015 (lbs/ft)]

+ [Number of Y-joints × Equivalent pipe length of 1.6 ft.]

Fig. 1 —Calculating Refrigerant Charge

R* Amount of additional refrigerant to be charged.

REFRIGERANT CIRCUIT

Refrigerant Circuit Diagram

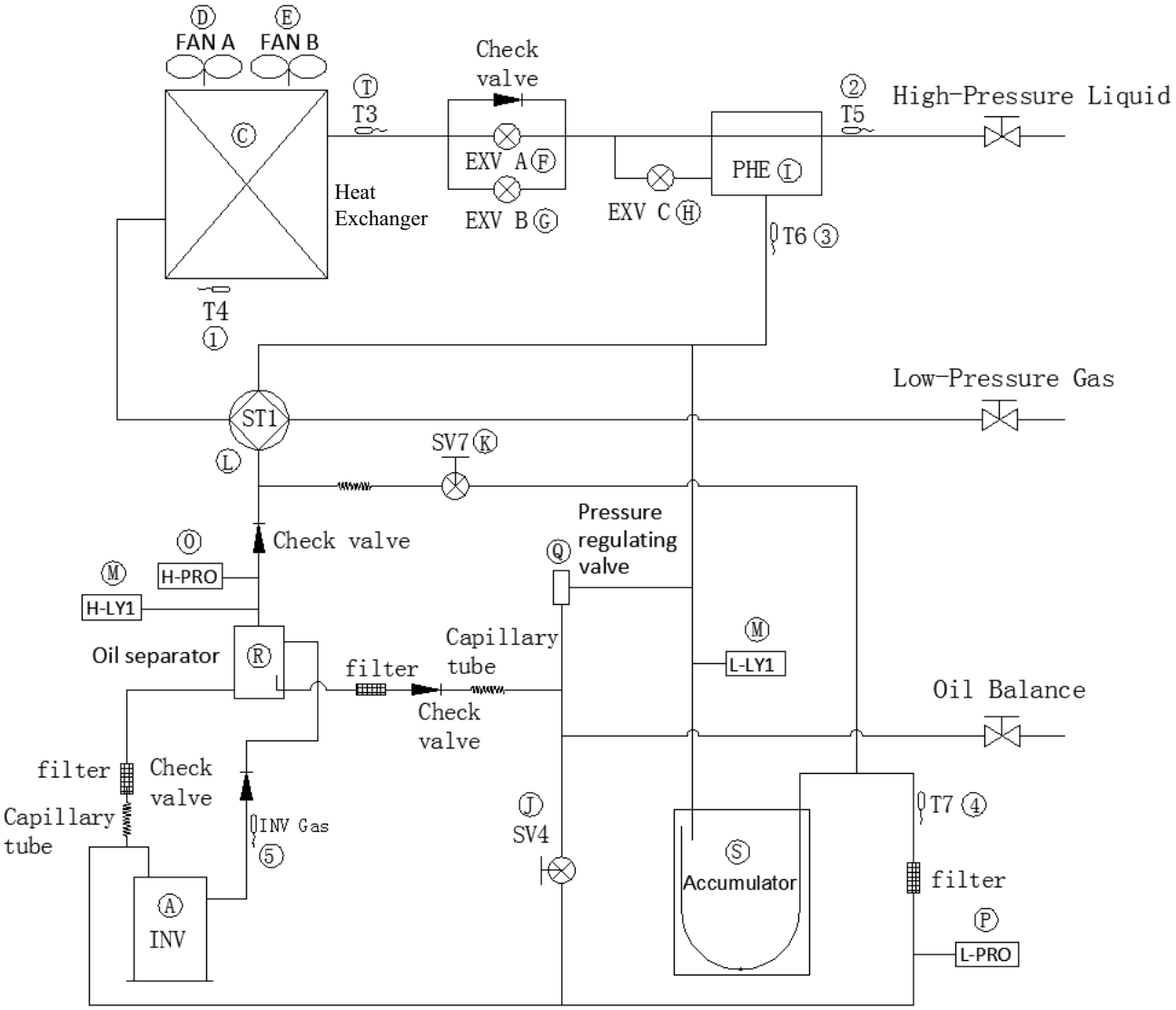

Fig. 17 —38VMA072, 096, 120HDS

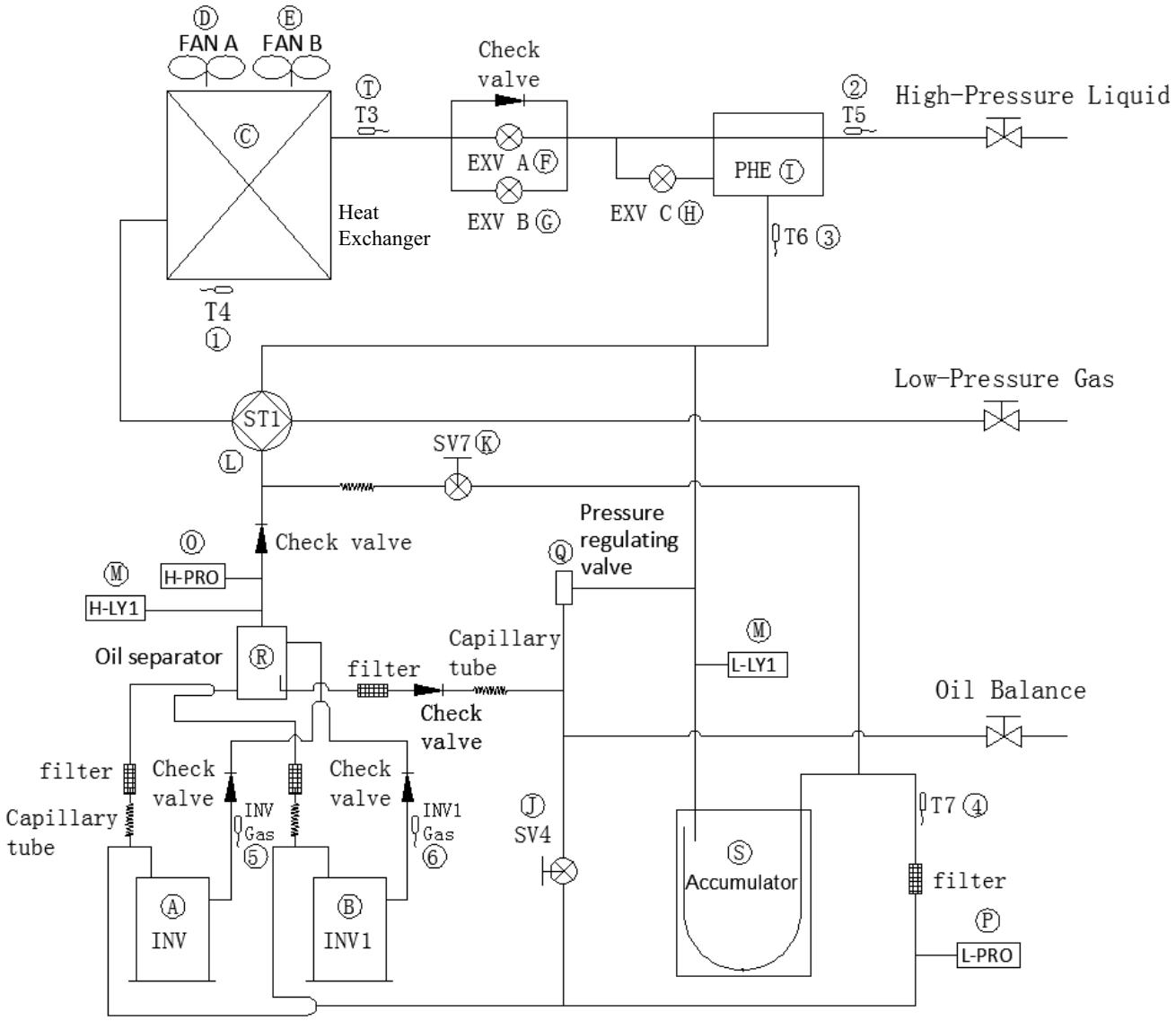

Fig. 18 —38VMA144HDS

Table 4 —38VMA072, 096, 120,144HDS

NUMBER IN REFRIGERANT SYSTEM DIAGRAM	SYMBOL	NAME	MAJOR FUNCTION
A	INV	Inverter compressor	Inverter compressor is operated on frequencies between 20 Hz and 100 Hz.
B	INV1	Inverter compressor	
C		Heat exchanger	To exchange heat with ambient environment.
D	FAN A	Left Inverter fan	The fan is operated at 13-step rotation speed by using the inverter.
E	FAN B	Right Inverter fan	The fan is operated at 13-step rotation speed by using the inverter.
F	EXV A	Electronic expansion valve	Used to adjust refrigerant volume.
G	EXV B	Electronic expansion valve	Used to adjust refrigerant volume.
H	EXV C	Electronic expansion valve	Used to adjust sub-cooling.
I	PHE	Plate Heat Exchanger	Used for sub-cooling liquid refrigerant from the electronic expansion valve.
J	SV4	Solenoid valve	Used to balance the oil between modules.
K	SV7	Solenoid valve	This valve opens at a pressure of 565.6 psi to prevent pressure from increasing.
L	ST1	4-way valve	Used to switch the operation mode between cooling and heating.
M	H-LY1	High pressure sensor	Used to detect high pressure.
N	L-LY1	Low pressure sensor	Used to detect low pressure.
O	H-PRO	High pressure switch	Used to protect the system pressure. When system pressure is too high, the pressure switch will open. Once the pressure switch is open, compressor will stop and will restart after twelve minutes.
P	L-PRO	Low pressure switch	Used to protect the system pressure. When the system pressure is too low, the pressure switch will open. Once the pressure switch is open, compressor will stop, and will restart after twelve minutes.
Q		Pressure regulating valve	This valve opens at a pressure of 580 psig to prevent pressure from increasing, thus resulting in no damage to functional parts due to the increase of pressure in transportation or storage.
R		Oil separator	Used to separate oil from high pressure and high temperature refrigerant, which is pumped out during compression.
S		Accumulator	Used to store the liquid refrigerant and oil. It can protect the compressor from liquid slugging.
T	T3	Thermistor (outdoor coil deicer)	Used to detect liquid pipe temperature of ODU heat exchanger, determine defrosting operation, and others.
1	T4	Thermistor (Outdoor air)	Used to detect outdoor / ambient temperature.
2	T5	Thermistor (liquid pipe)	Detects temperature of liquid pipe after Plate Heat Exchanger.
3	T6	Thermistor (Plate Heat Exchanger gas pipe)	Detects temperature of gas pipe on the evaporation side of Plate Heat Exchanger. Used to maintain constant control on superheated of the Plate Heat Exchanger.
4	T7	Thermistor (Accumulator outlet)	Used to detect gas pipe temperature at the accumulator outlet.
5	INV Gas	Thermistor (INV discharge pipe)	Used to detect discharge pipe temperature. Enables the temperature protection control of compressor, and others.
6	INV1 Gas	Thermistor (INV1 discharge pipe)	Used to detect discharge pipe temperature. Enables the temperature protection control of compressor, and others.

Functional Parts Layout

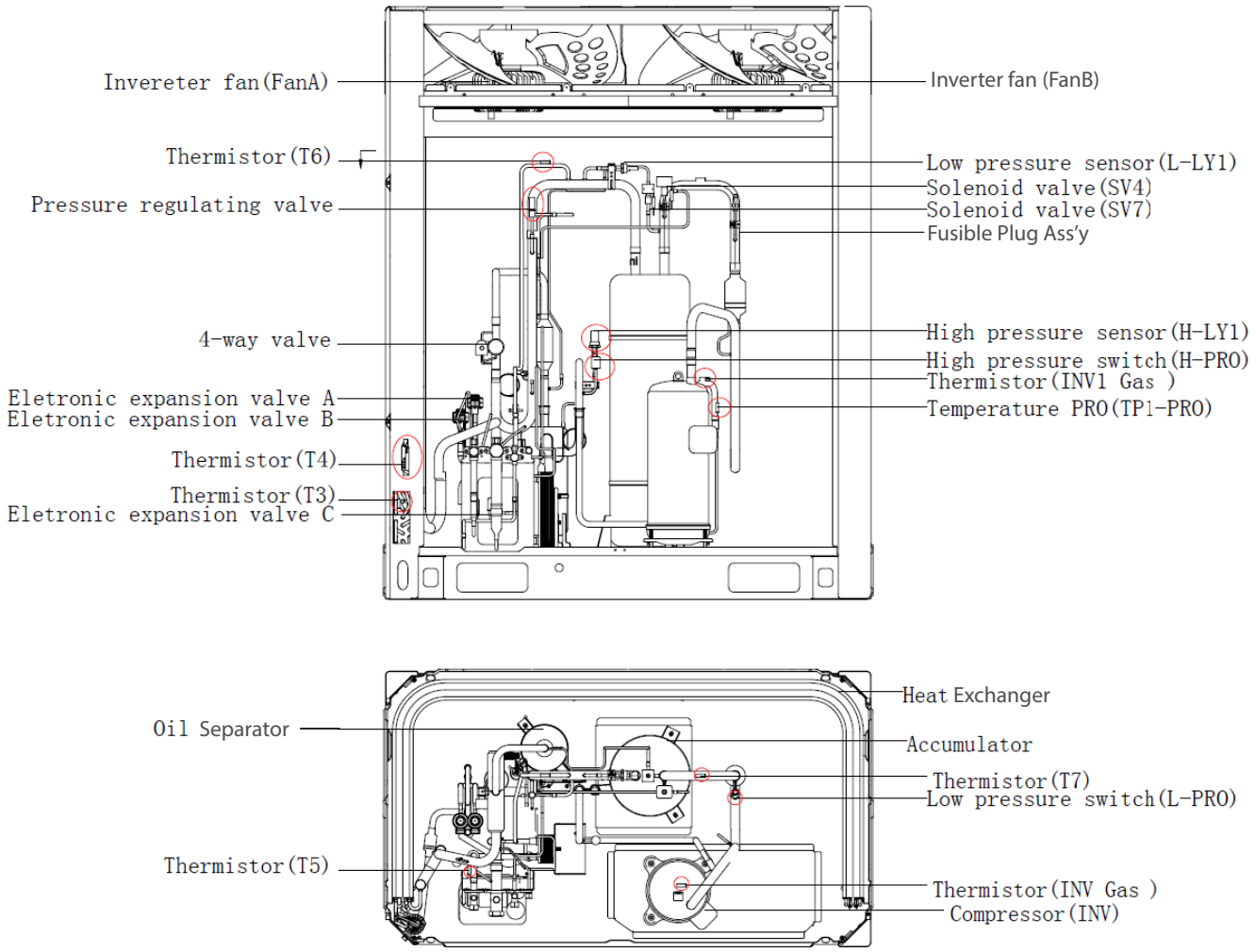

Fig. 19 —38VMA072, 096, 120HDS

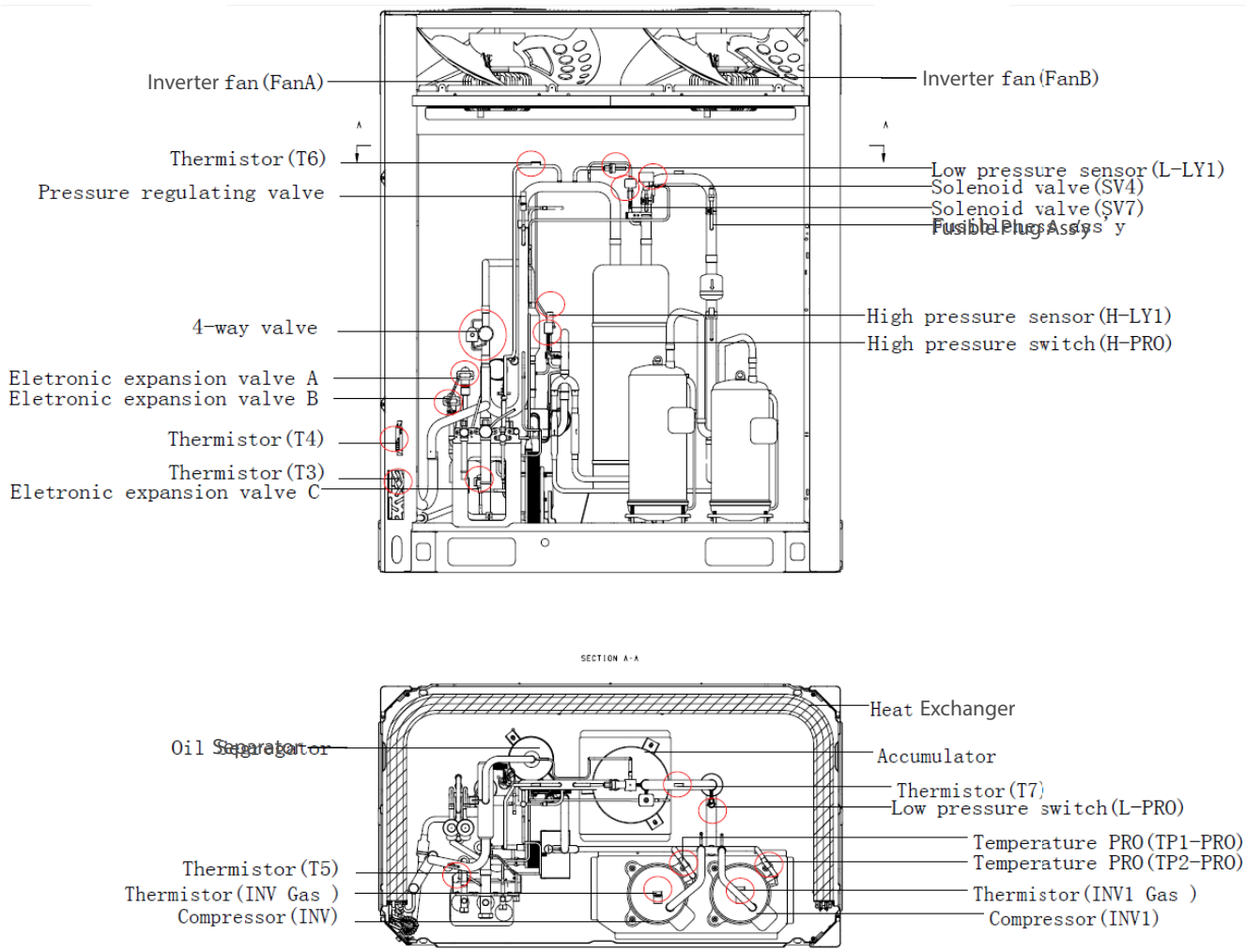

Fig. 20 —38VMA0144HDS

Refrigerant Flow for Each Operational Mode

38VMA072, 096, 120HDS

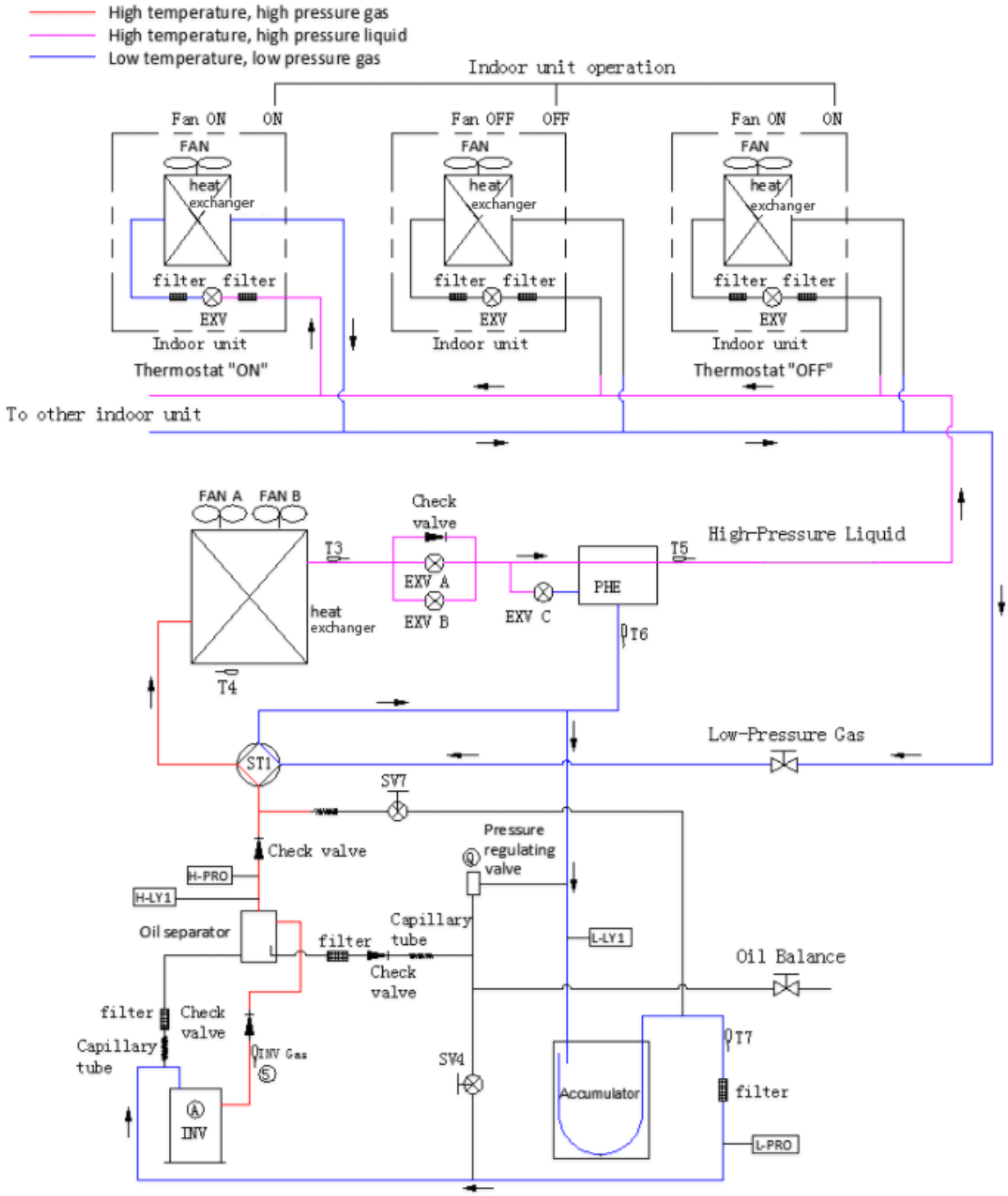

Fig. 21 —Cooling Operation

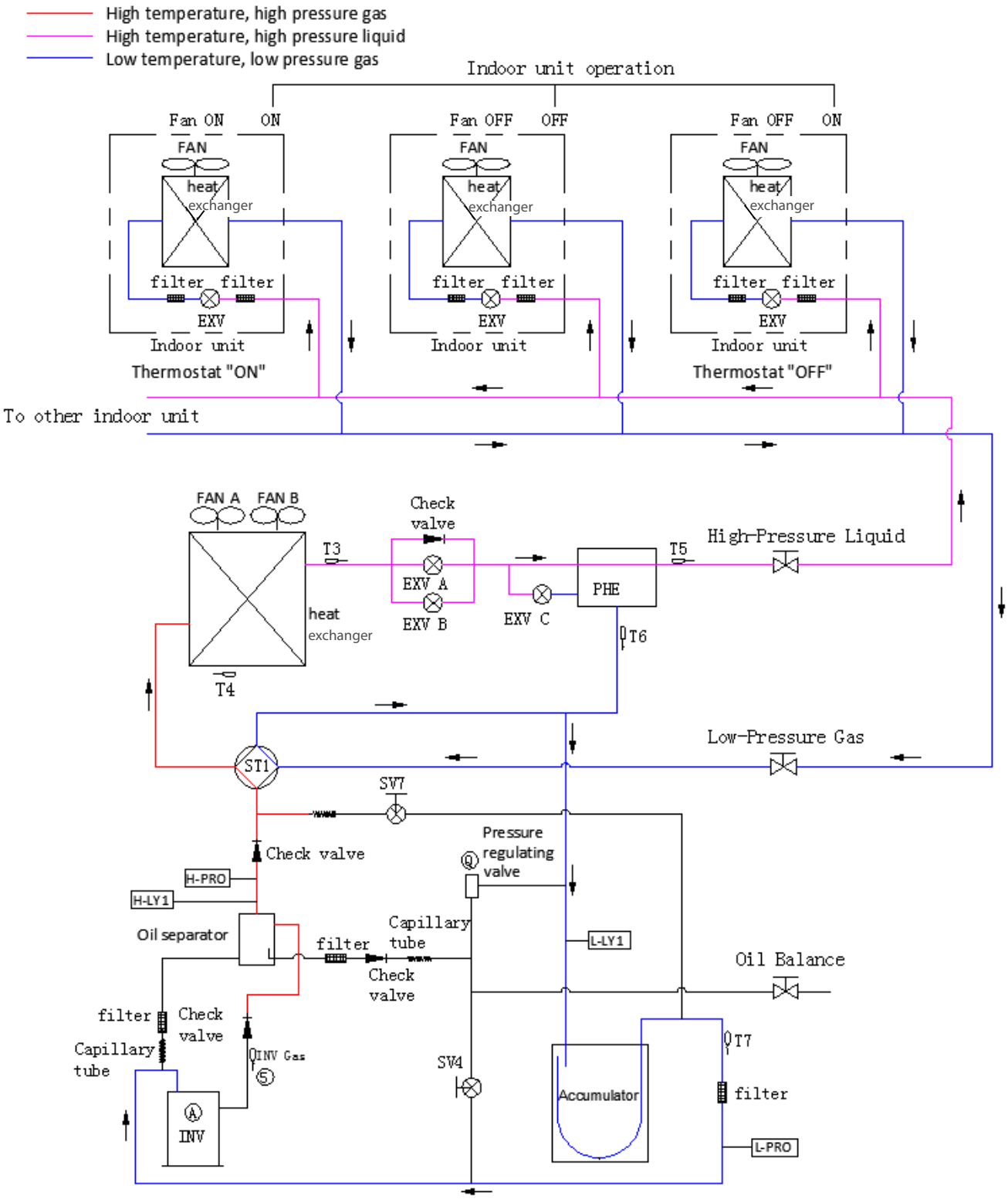

Fig. 22 —Cooling Oil Return

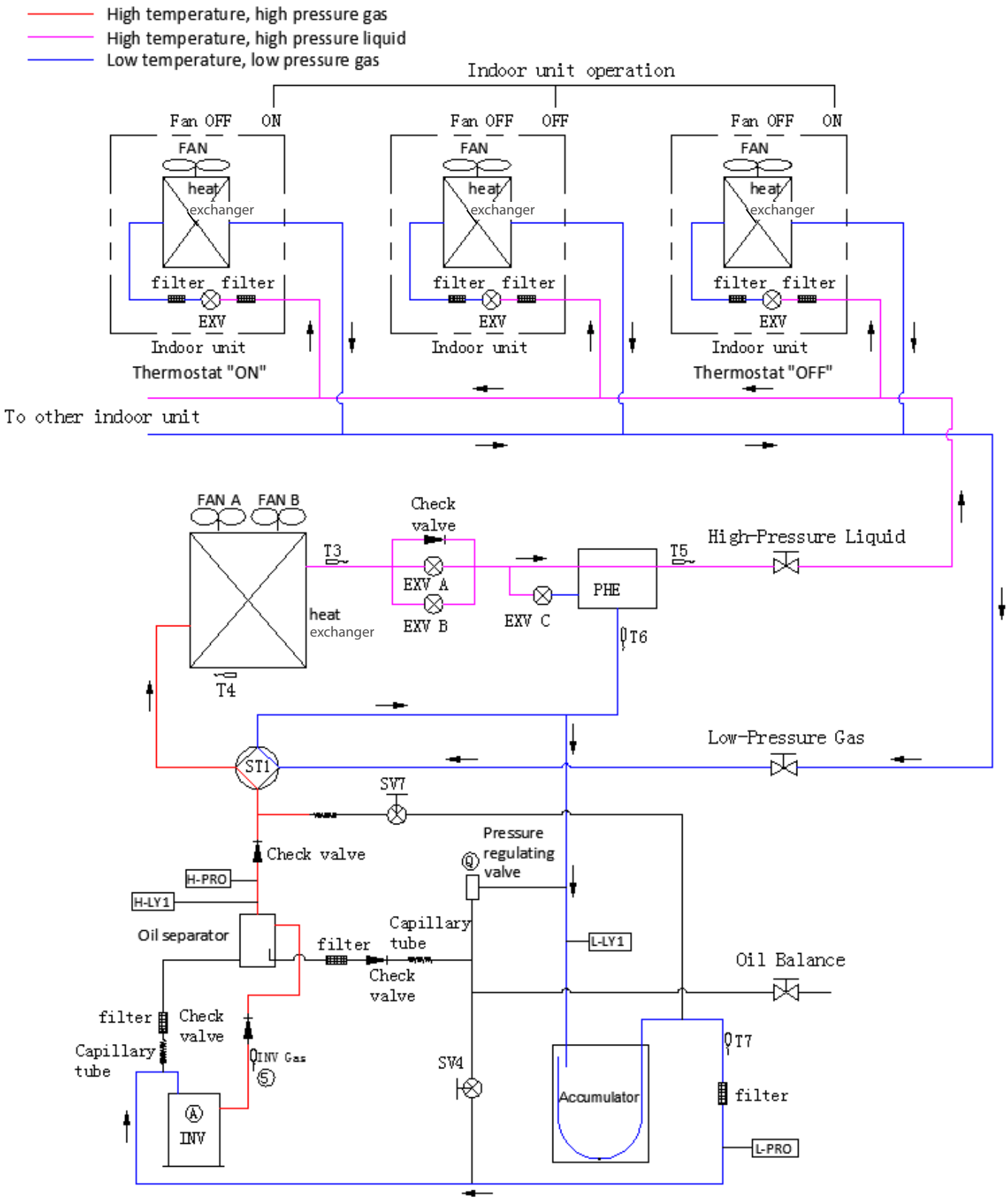

Fig. 23 —Heating Oil Return and Defrost

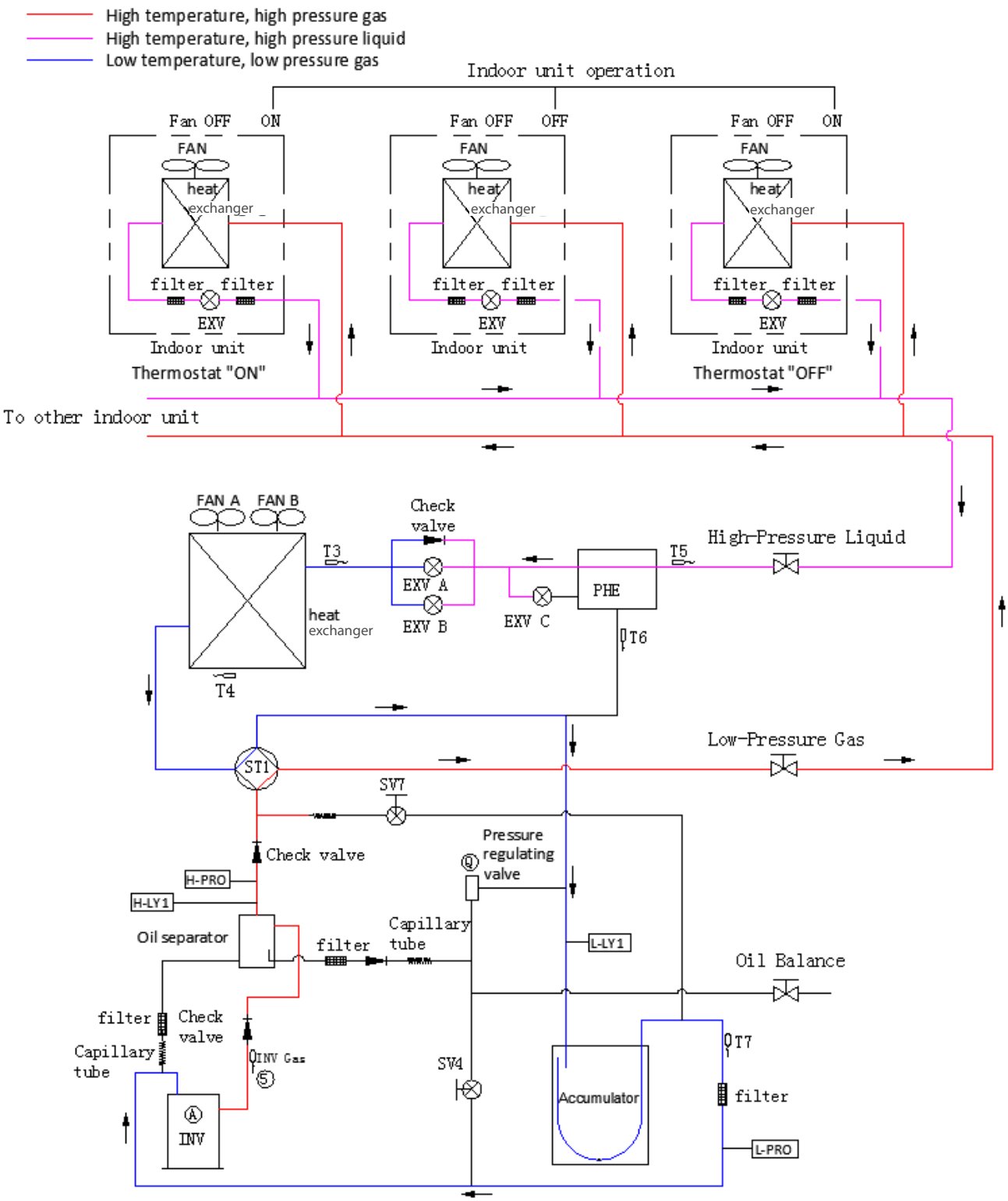

Fig. 24 —Heating Operation

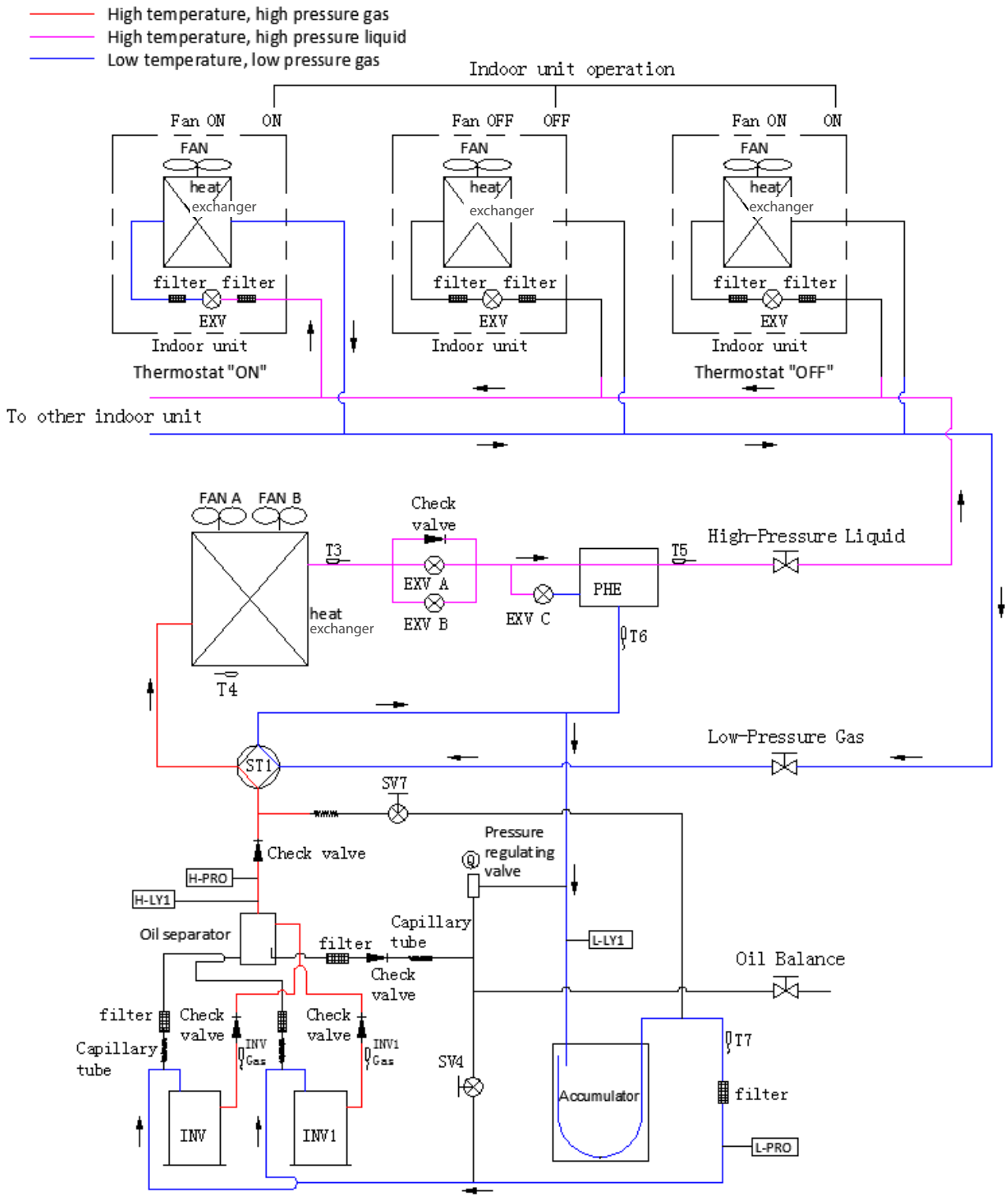

Fig. 25 —Cooling Operation

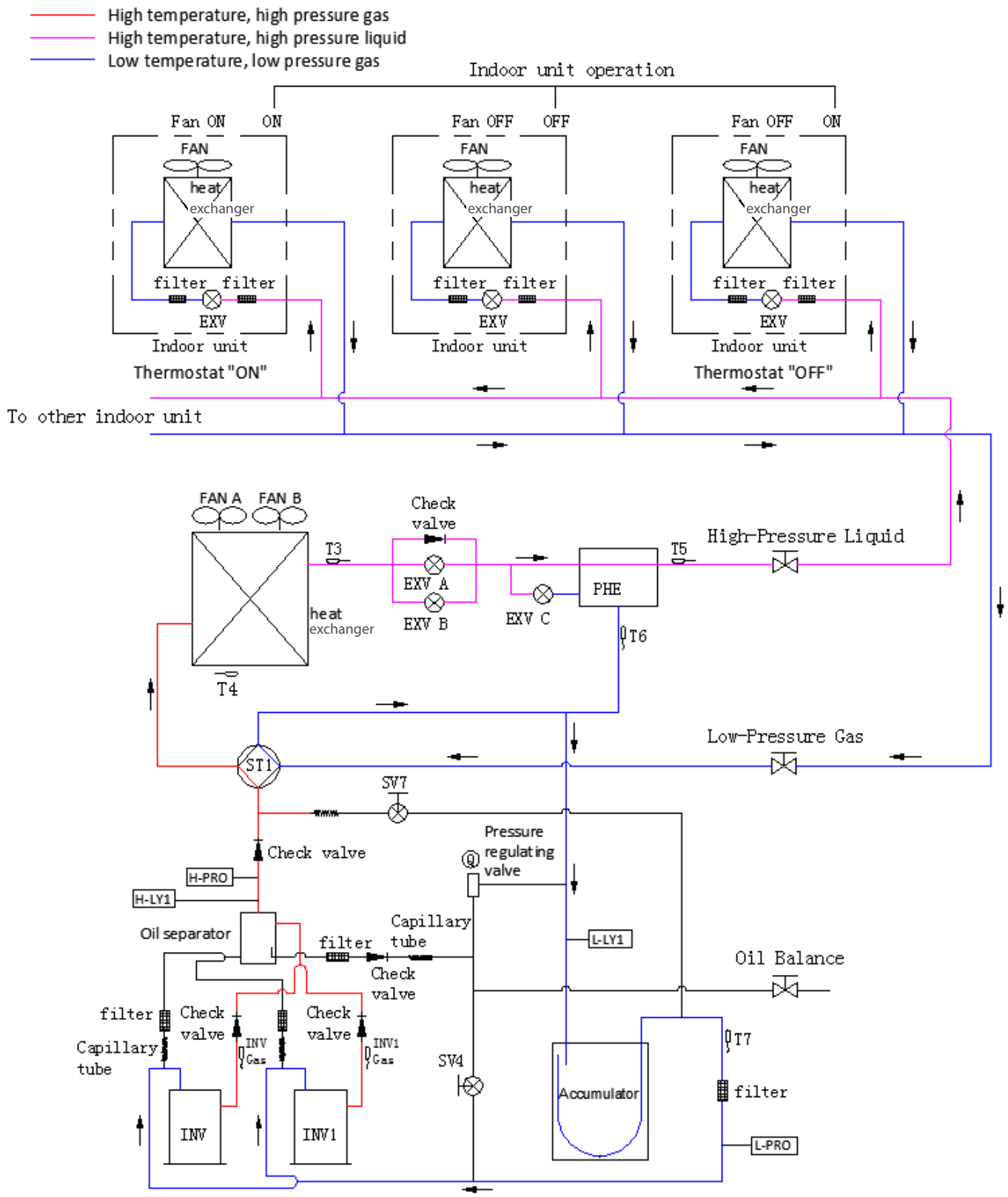

Fig. 26 —Cooling Oil Return

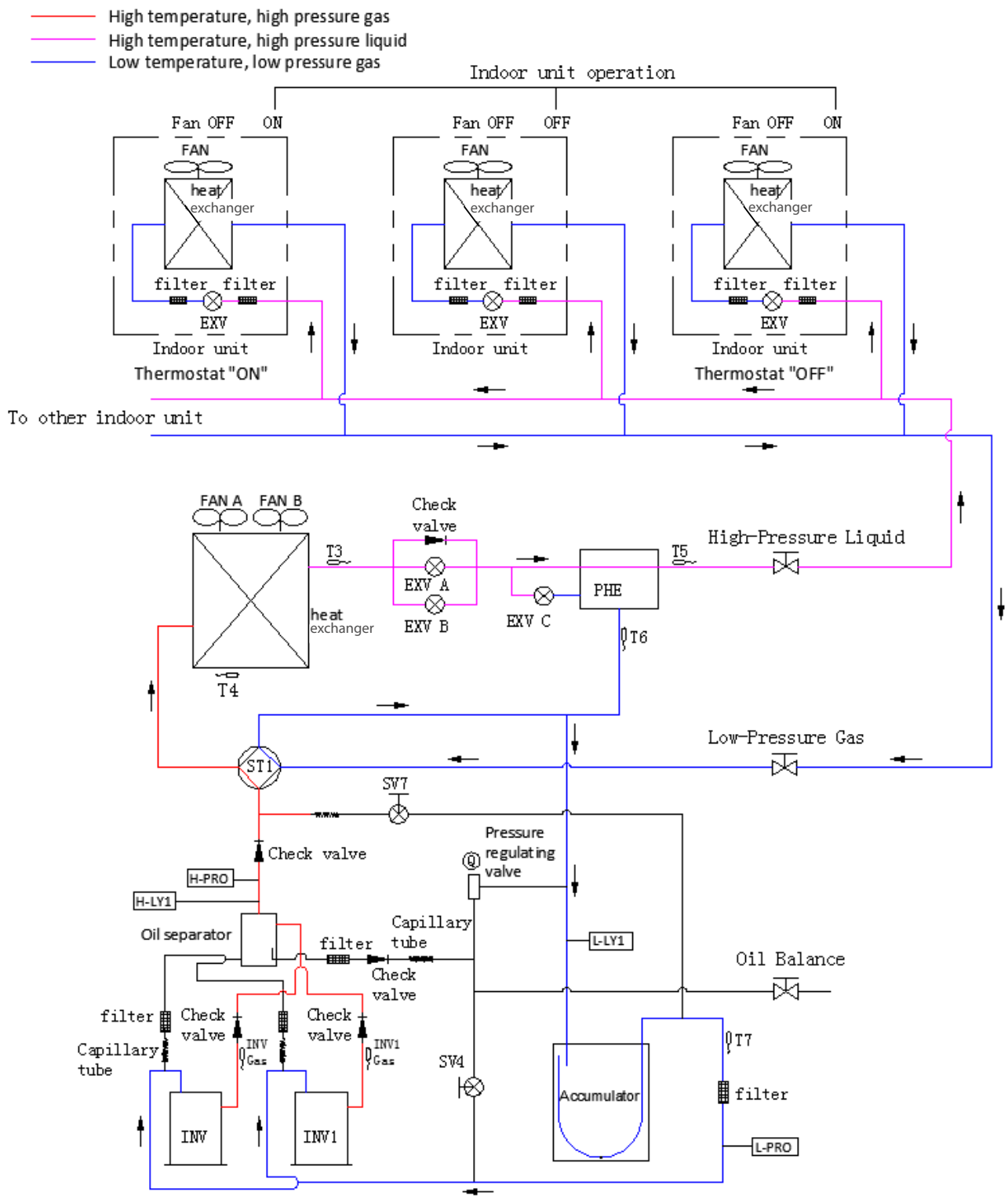

Fig. 27 —Heating Oil Return and Defrost

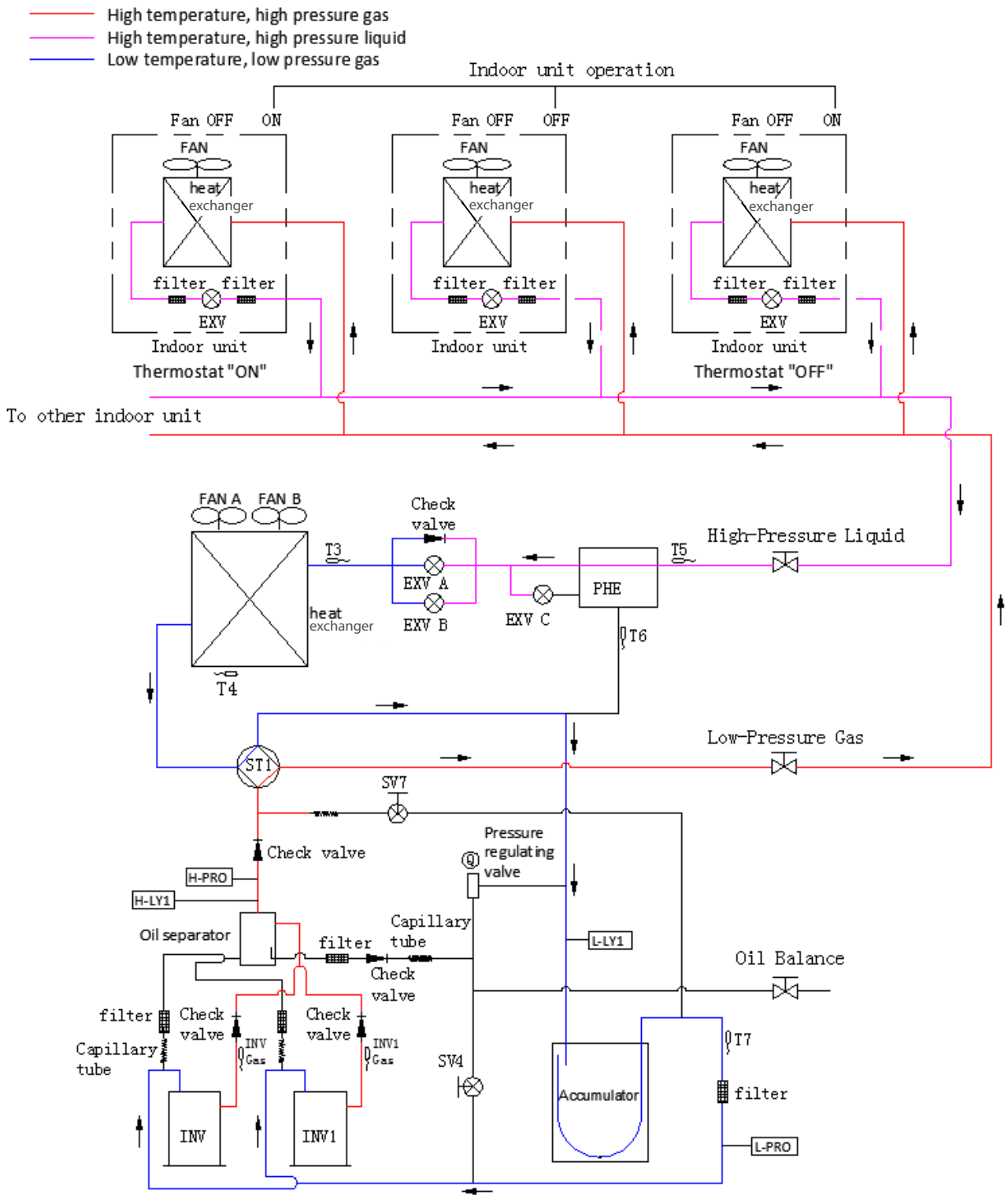

Fig. 28 —Heating Operation

FUNCTION AND CONTROL

Operation Mode

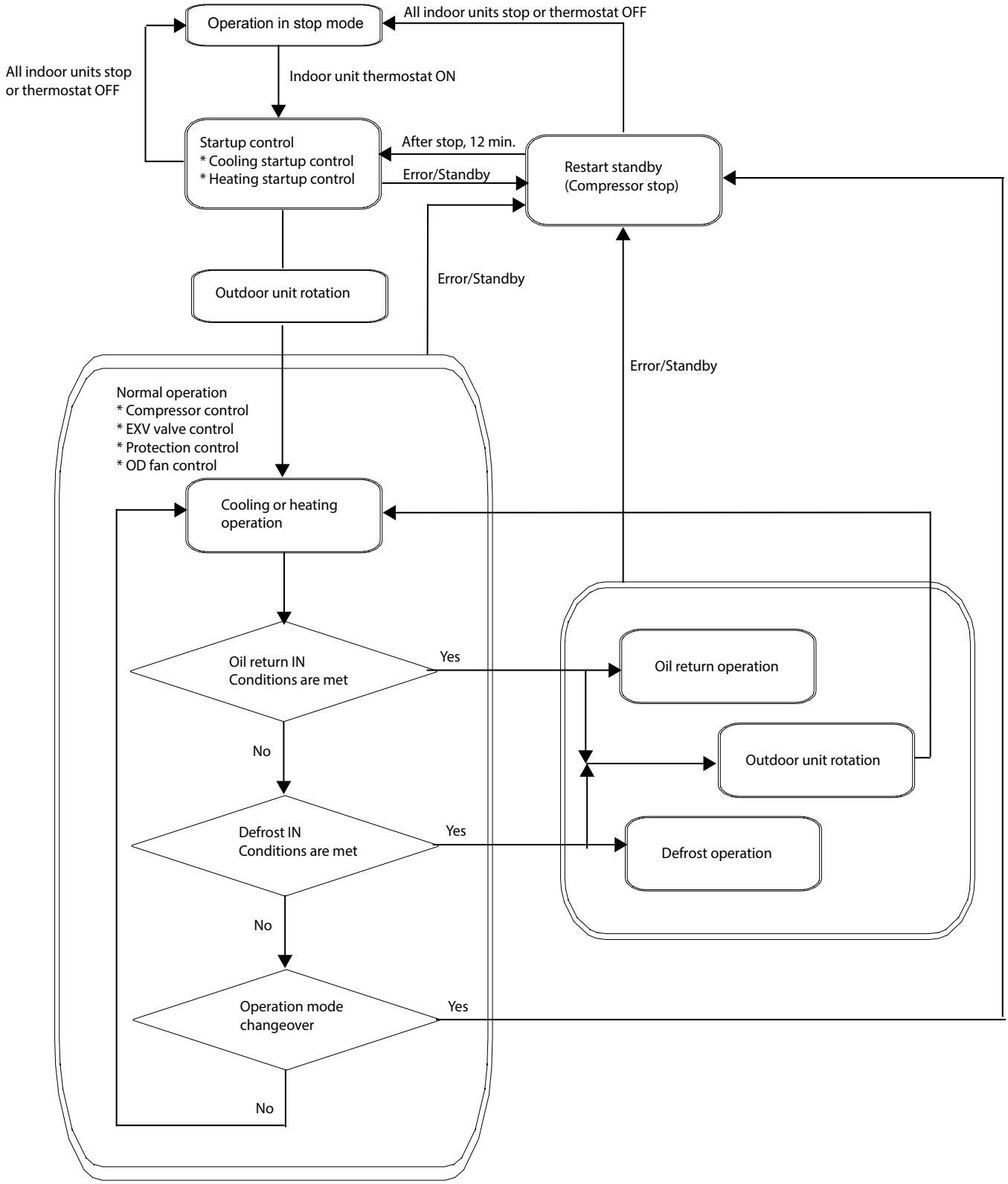

Fig. 29 —Operation Mode

Basic Control

NORMAL OPERATION

Table 5 —Cooling Operation

COMPONENT	OPERATION	REMARKS
Compressor	Cooling Compressor control	Used for high pressure protection control, discharge pipe temperature protection control, and compressor operating frequency upper limit control with inverter protection control.
Outdoor unit fan (FAN A)	Cooling fan control	
Outdoor unit fan (FAN B)	Cooling fan control	
Four way valve (ST1)	OFF	
Electronic expansion valve (EXV A)	350P	
Electronic expansion valve (EXV B)	350P	
Electronic expansion valve (EXV C)	PI control	
Solenoid valve (SV4)	17 minutes OFF, 3 minutes ON	
Solenoid valve (SV7)	Pc ≥ 536.6 psi ON, Pc < 478.6 psi OFF	

Table 6 —Heating Operation

COMPONENT	OPERATION	REMARKS
Compressor	Heating Compressor control	Used for high pressure protection control, low pressure protection control, discharge pipe temperature protection control, and compressor operating frequency upper limit control with inverter protection control.
Outdoor unit fan (FAN A)	Heating fan control	
Outdoor unit fan (FAN B)	Heating fan control	
Four way valve (ST1)	ON	
Electronic expansion valve (EXV A)	Heating EXV control	
Electronic expansion valve (EXV B)	Heating EXV control	
Electronic expansion valve (EXV C)	0P	
Solenoid valve (SV4)	17 minutes OFF, 3 minutes ON	
Solenoid valve (SV7)	Pc ≥ 507.6 psi ON, Pc < 420.6 psi OFF	

NOTE: Heating operation is not functional at an outdoor air temperature of 77°F or more.

CAPACITY CALCULATION

Table 7 —Cooling Calculation

INDOOR UNIT CAPACITY (BTU)	INDOOR UNIT CAPACITY X 100W	INDOOR UNIT CAPACITY (HP) A	INDOOR UNIT CAPACITY (BTU)	INDOOR UNIT CAPACITY X 100W	INDOOR UNIT CAPACITY (HP) A
6000	15, 17	0.5	36000	112	4.0
7000	22, 25	0.8	42000	125	4.5
9000	28	1.0	48000	140	5.0
12000	32, 36	1.2	54000	160	6.0
13000	40	1.4	60000	180	6.5
15000	45, 50	1.7	66000	200	7.0
18000	56	2.0	72000	224, 252	8.0
21000	63	2.2	96000	280	10.0
24000	71	2.5	120000	335	12.0
27000	80	3.0	144000	400	14.0
30000	90	3.2	168000	450	16.0
33000	100	3.6	192000	560, 580	20.0

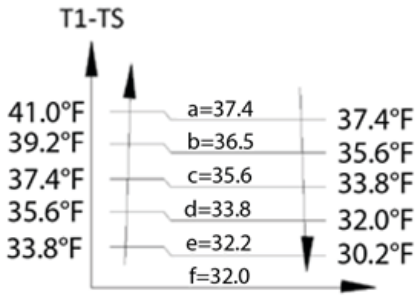

Capacity Zone	a	b	c	d	e	f
Factor B	3	2.5	2	1	0.1	0

Ambient temperature T4	T4 ≥ 86^{0}F	75^{0}F ≤ T4 < 86^{0}F	63^{0}F ≤ T4 < 75^{0}F
T4 correction factor C	100%	90%	80%
Ambient temperature T4	54^{0}F ≤ T4 < 63^{0}F	45^{0}F ≤ T4 < 54^{0}F	36^{0}F ≤ T4 < 45^{0}F
T4 correction factor C	50%	40%	30%
Ambient temperature T4	5^{0}F ≤ T4 < 36^{0}F	T4 < 5^{0}F OR T4≥131^{0}F	
T4 correction factor C	30%	0	

QCi: Total cooling capacity for indoor units

QCi = ∑(AxB) x C (Round number)

Table 8 —Outdoor Unit Cooling Capacity Calculation

OUTDOOR UNIT CAPACITY X 1000BTU	OUTDOOR UNIT CAPACITY (HP) D
72	8
96	10
120	12
144	14

QCo: Outdoor unit cooling capacity

QCo = QCix D/∑D (Round number)

T2B correction factor E

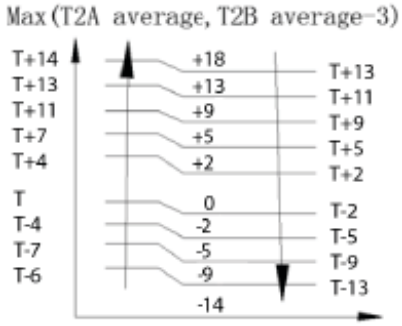

T = 47ºF (default)

QCr: outdoor unit real cooling Capacity

QCr = QCo + E

For example:

outdoor unit 72 + 96, cooling indoor unit (12K x 6) + (18K x 6), T1 = 81ºF, TS = 70ºF, T4 = 82ºF

Max (T2A average, T2B average - 3) = 55ºF

T1 – TS = 81 – 70 = 11, so B = 3

T4 = 82, so C = 90%

Max (T2A average, T2B average = 55ºF, so E = 3

QCi = ∑ (AxB) x C= (1.2 x 3 x 6 + 2.0 x 3 x 6) x 90% = 51.84, Round number: 52

72 outdoor unit cooling capacity: QCo = QCix D / ∑D = 52 x 8 / (8 + 10) = 23.1, Round number: 24

96 outdoor unit cooling capacity: QCo = QCix D / ∑D = 52 x 10 / (8 + 10) = 28.8, Round number: 29

72 outdoor unit actual cooling capacity: QCr = QCo + E = 24 + 3 = 27, From the frequency table: 70Hz

96 outdoor unit actual cooling capacity: QCr = QCo + E = 29 + 3 = 32, From the frequency table: 80Hz

Table 9 —Heating capacity calculation

INDOOR UNIT CAPACITY (BTU)	INDOOR UNIT CAPACITY X 100W	INDOOR UNIT CAPACITY (HP) A	INDOOR UNIT CAPACITY (BTU)	INDOOR UNIT CAPACITY X 100W	INDOOR UNIT CAPACITY (HP) A
6000	15, 17	0.5	36000	112	4.0
7000	22, 25	0.8	42000	125	4.5
9000	28	1.0	48000	140	5.0
12000	32, 36	1.2	54000	160	6.0
13000	40	1.4	60000	180	6.5
15000	45, 50	1.7	66000	200	7.0
18000	56	2.0	72000	224, 252	8.0
21000	63	2.2	96000	280	10.0
24000	71	2.5	120000	335	12.0
27000	80	3.0	144000	400	14.0
30000	90	3.2	168000	450	16.0
33000	100	3.6	192000	560, 580	20.0

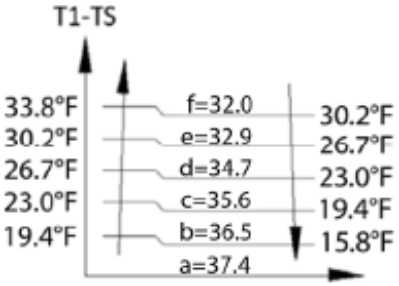

Capacity Zone	a	b	c	d	e	f
Factor B	3	2.5	2	1.5	0.5	0

Ambient temperature T4	T4 < 20^{0}F	20^{0}F ≤ T4 < 32^{0}F	32^{0}F ≤ T4 < 50^{0}F
T4 correction factor C	140%	120%	100%
Ambient temperature T4	50^{0}F ≤ T4 < 63^{0}F	63^{0}F ≤ T4 < 77^{0}F	77^{0}F ≤ T4
T4 correction factor C	80%	60%	0

QHi: Total heating capacity of indoor units

QHi=∑(AxB) x C (Round number)

Table 10 —Outdoor unit heating capacity calculation

OUTDOOR UNIT CAPACITY X 1000 BTU	OUTDOOR UNIT CAPACITY (HP) D
72	8
96	10
120	12
144	14

QHo: Outdoor Unit Heating Capacity

QHo = QHi x D/∑D（Round number）

T2A correction factor E

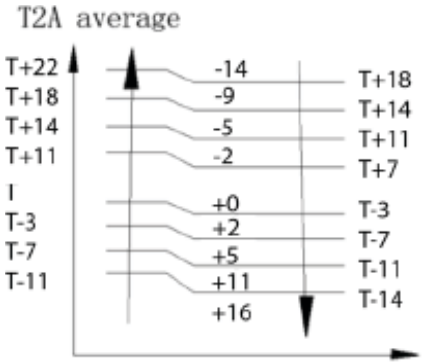

T = 102ºF (default)

QHr: Outdoor Unit Real Heating Capacity

QHr = QHo + E

For example:

Outdoor Unit 72 + 96, Heating Indoor Unit (12K x 6) + (18K x 6), T1 = 63ºF, TS = 70ºF, T4 = 45ºF, T2A (average) = 93ºF

T1 – TS = 63 – 70 = -7, so B = 2

T4 = 45, so C = 100%

T2A (average) = 93ºF, so E = 6

QHi = ∑(AxB) x C = (1.2 x 2 x 6 + 2.0 x 2 x 6) x 100% = 38.4, Round number: 39

72 outdoor unit capacity: QHo = QHix D / ∑D = 39 x 8 / (8 + 10) = 17.3, Round number: 18

96 outdoor unit capacity: QHo = QHix D / ∑D = 39 x 10 / (8 + 10) = 21.6, Round number: 22

72 outdoor unit actual capacity: QHr = QHo + E =18 + 6 = 24, From the frequency table: 70Hz

96 outdoor unit actual capacity: QHr = QHo + E = 22 + 6 = 28, From the frequency table: 78Hz

NOTES:

TS: Indoor unit setting temperature

T1: Room temperature

T2A: Temperature of evaporator inlet

T2B: Temperature of evaporator outlet

T4: Ambient temperature

COMPRESSOR CONTROL

Compressor Operating Priority

Each compressor operates in the following order of priority.

38VMA072, 096, 120HDS **38VMA144HDS**

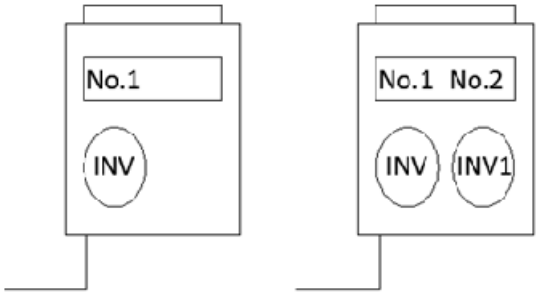

INV: Inverter compressor

Table 11 —Cooling Compressor Control (38VMA072, 096, 120HDS)

CAPACITY QCR	FREQUENCY		
	38VMA072	38VMA096	38VMA120
1	20Hz	20Hz	20Hz
2	20Hz	20Hz	20Hz
3	20Hz	20Hz	20Hz
4	20Hz	20Hz	20Hz
5	20Hz	20Hz	20Hz
6	20Hz	20Hz	20Hz
7	20Hz	20Hz	20Hz
8	22Hz	22Hz	22Hz
9	24Hz	24Hz	24Hz
10	26Hz	26Hz	26Hz
11	28Hz	28Hz	28Hz
12	32Hz	32Hz	32Hz
13	36Hz	36Hz	36Hz
14	39Hz	39Hz	39Hz
15	42Hz	42Hz	42Hz
16	44Hz	44Hz	44Hz
17	46Hz	46Hz	46Hz
18	48Hz	48Hz	48Hz
19	52Hz	52Hz	52Hz
20	54Hz	54Hz	54Hz

CAPACITY QCR	FREQUENCY		
	38VMA072	38VMA096	38VMA120
21	56Hz	56Hz	56Hz
22	58Hz	58Hz	58Hz
23	60Hz	60Hz	60Hz
24	62Hz	62Hz	62Hz
25	64Hz	64Hz	64Hz
26	68Hz	68Hz	68Hz
27	70Hz	70Hz	70Hz
28		72Hz	72Hz
29		74Hz	74Hz
30		76Hz	76Hz
31		78Hz	78Hz
32		80Hz	80Hz
33		82Hz	82Hz
34			84Hz
35			84Hz
36			86Hz
37			86Hz
38			86Hz
39			86Hz

Table 12 —Cooling Compressor Control (38VMA144HDS)

CAPACITY QCR	FREQUENCY		CAPACITY QCR	FREQUENCY		CAPACITY QCR	FREQUENCY	
	38VMA144(1)	38VMA144(2)		38VMA144(1)	38VMA144(2)		38VMA144(1)	38VMA144(2)
1	20Hz		20	54Hz	38 + 36	39		74 + 72
2	20Hz		21	56Hz	39 + 38	40		76 + 74
3	20Hz		22	58Hz	42 + 40	41		78 + 76
4	20Hz		23	60Hz	44 + 42	42		80 + 78
5	20Hz		24	62Hz	46 + 44	43		82 + 80
6	20Hz		25	64Hz	48 + 46	44		84 + 82
7	20Hz		26	68Hz	52 + 46	45		86 + 84
8	22Hz		27	70Hz	52 + 48	46		86 + 84
9	24Hz		28		54 + 52	47		86 + 84
10	26Hz		29		56 + 54	48		86 + 84
11	28Hz		30		58 + 56	49		86 + 84
12	32Hz		31		60 + 58	50		86 + 84
13	36Hz		32		62 + 60	51		86 + 84
14	39Hz		33		63 + 61	52		86 + 84
15	42Hz		34		64 + 62	53		86 + 84
16	44Hz		35		66 + 64	54		86 + 84
17	46Hz		36		68 + 66	55		86 + 84
18	48Hz		37		70 + 68	56		86 + 84
19	52Hz		38		72 + 70			

Table 13 — Heating Compressor Control (38VMA072, 096, 120HDS)

CAPACITY QHR	FREQUENCY		
	38VMA072	38VMA096	38VMA120
1	20Hz	20Hz	20Hz
2	20Hz	20Hz	20Hz
3	21Hz	21Hz	21Hz
4	22Hz	22Hz	22Hz
5	23Hz	23Hz	23Hz
6	24Hz	24Hz	24Hz
7	26Hz	26Hz	26Hz
8	28Hz	28Hz	28Hz
9	32Hz	32Hz	32Hz
10	36Hz	36Hz	36Hz
11	39Hz	39Hz	39Hz
12	42Hz	42Hz	42Hz
13	44Hz	44Hz	44Hz
14	46Hz	46Hz	46Hz
15	48Hz	48Hz	48Hz
16	52Hz	52Hz	52Hz
17	54Hz	54Hz	54Hz
18	56Hz	56Hz	56Hz
19	58Hz	58Hz	58Hz
20	60Hz	60Hz	60Hz

CAPACITY QHR	FREQUENCY		
	38VMA072	38VMA096	38VMA120
21	62Hz	62Hz	62Hz
22	64Hz	64Hz	64Hz
23	68Hz	68Hz	68Hz
24	70Hz	70Hz	70Hz
25	72Hz	72Hz	72Hz
26	74Hz	74Hz	74Hz
27	76Hz	76Hz	76Hz
28		78Hz	78Hz
29		80Hz	80Hz
30		82Hz	82Hz
31		84Hz	84Hz
32		86Hz	86Hz
33		86Hz	86Hz
34			88Hz
35			88Hz
36			90Hz
37			90Hz
38			92Hz
39			92Hz

Table 14 —Heating Compressor Control (38VMA144HDS)

CAPACITY QHR	FREQUENCY		CAPACITY QHR	FREQUENCY		CAPACITY QHR	FREQUENCY	
	38VMA144(1)	38VMA144(2)		38VMA144(1)	38VMA144(2)		38VMA144(1)	38VMA144(2)
1	20Hz		20	60Hz	42 + 40	39		73 + 71
2	20Hz		21	62Hz	44 + 42	40		74 + 72
3	21Hz		22	64Hz	46 + 44	41		75 + 73
4	22Hz		23	68Hz	48 + 45	42		76 + 74
5	23Hz		24	70Hz	48 + 46	43		78 + 76
6	24Hz		25	72Hz	52 + 46	44		80 + 78
7	26Hz		26	74Hz	52 + 48	45		81 + 79
8	28Hz		27	76Hz	54 + 52	46		82 + 80
9	32Hz		28		56 + 54	47		83 + 81
10	36Hz		29		58 + 56	48		84 + 82
11	39Hz		30		60 + 58	49		85 + 83
12	42Hz		31		62 + 60	50		86 + 84
13	44Hz		32		63 + 61	51		87 + 85
14	46Hz		33		64 + 62	52		88 + 86
15	48Hz		34		66 + 64	53		89 + 87
16	52Hz		35		67 + 65	54		90 + 88
17	54Hz		36		68 + 66	55		92 + 90
18	56Hz		37		70 + 68	56		92 + 90
19	58Hz		38		72 + 70			

NOTES:

- Compressors are operated in the order of descending priorities.
- Compressors may operate in a pattern other than those listed in above tables subject to the operating conditions.

ELECTRONIC EXPANSION VALVE CONTROL

Cooling Electronic Expansion Valve Control

ELECTRONIC EXPANSION VALVE	EXV A	EXV B	EXV C
Normal control	350P	350P	PI control

Heating Electronic Expansion Valve Control

Table 15 —EXV A, EXV B (38VMA072, 096, 120HDS)

CAPACITY	1—15	16—30	31—48
INITIAL PULSE STEP	256P	352P	480P
Normal control	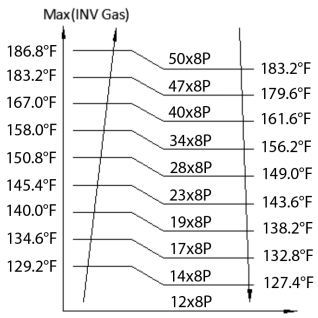	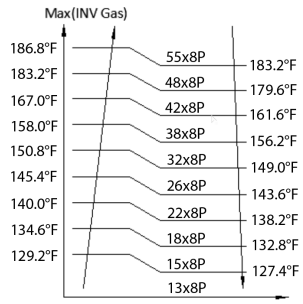	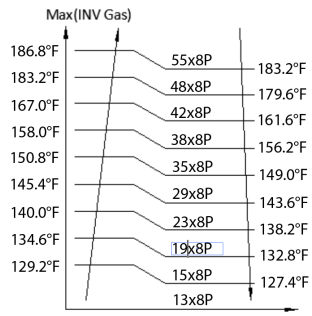

Table 16 —EXV A, EXV B (38VMA144HDS)

CAPACITY	1—15	16—30	31—48
INITIAL PULSE STEP	120P	250P	380P
Normal Control	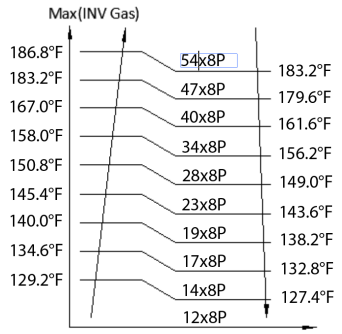	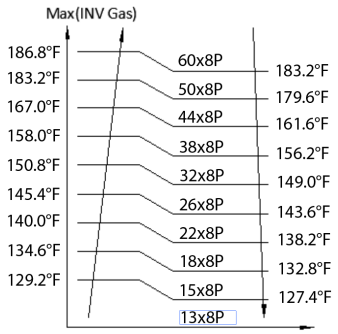	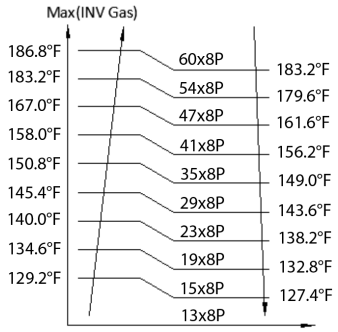

Table 17 —EXV C

Electronic Expansion Valve	EXV C
Normal Control	0P

NOTE:

Completely open position of electronic expansion valve (EXV) is 480P.

When the compressor ramps up, EXV will be at initial pulse step for four minutes, and then the EXV will be adjusted according to the maximum discharge temperature.

The system will check the maximum discharge temperature every two minutes.

FAN CONTROL

Table 18 —Fan Steps

FAN STEPS	ROTATING SPEED		
	38VMA072, 096HDS	38VMA120HDS	38VMA144HDS
0	0 / 0	0 / 0	0 / 0
1	250 / 0	250 / 0	250 / 0
2	330 / 0	330 / 0	330 / 0
3	250 / 250	250 / 250	250 / 250
4	330 / 330	330 / 330	330 / 330
5	410 / 410	410 / 410	410 / 410
6	460 / 460	460 / 460	460 / 460
7	530 / 530	530 / 530	530 / 530
8	580 / 580	580 / 580	580 / 580
9	660 / 660	660 / 660	660 / 660
10	710 / 710	710 / 710	710 / 710
11	760 / 760	800 / 800	800 / 800
12 (standard 0pa)	800 / 800	850 / 850	980 / 890
13 (20pa)	870 / 870	870 / 870	980 / 890
14 (40pa)	980 / 890	980 / 890	980 / 890
15 (60pa)	1010 / 930	1010 / 930	1010 / 930

Cooling Fan Control

Table 19 —Cooling Fan Control

Ambient Temperature T4(°F)	T4 < 32	32 ≤ T4 < 41	41 ≤ T4 < 50	50 ≤ T4 < 59	59 ≤ T4 < 68	68 ≤ T4 < 77	77 ≤ T4 < 86	T4 ≥ 86
Fan Initial Step	1	3	4	6	7	10	11	12

Fan Control Process

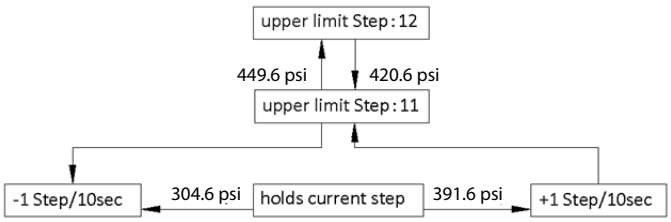

NOTE: When compressor ramps up, fan speed will be at the initial step for 90 seconds. Then the fan will be controlled per the fan control process.

HEATING FAN CONTROL

Table 20 —Heating Fan Control

AMBIENT TEMPERATURE T4°F	T4 < 27	27 ≤ T4 < 50	50 ≤ T4 < 59
Fan Steps	Step 13	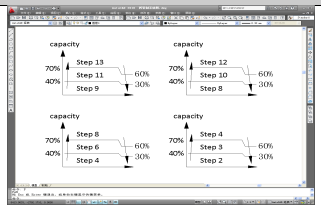	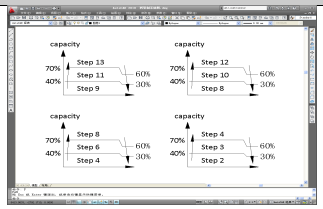
AMBIENT TEMPERATURE T4°F	**59 ≤ T4 < 68**	**68 ≤ T4 < 77**	**77 ≤ T4**
Fan Steps	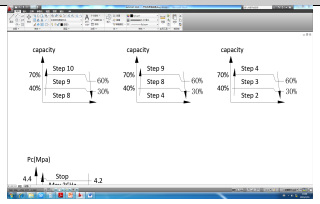	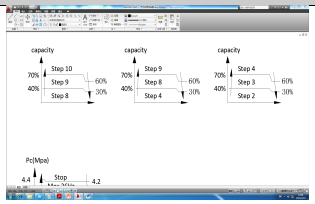	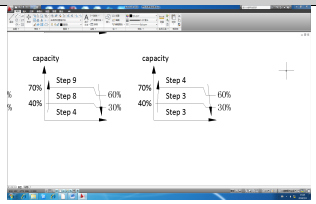

SPECIAL CONTROL

Startup Control

Table 21 —Startup Control in Cooling Operation

COMPONENT	OPERATION	REMARKS
Compressor	Capacity control	Compressor operational frequency increases by 1 step / 1 second
Outdoor unit fan (FAN A)	High pressure control	Initial step for 90 seconds 1-step increase with Pc > 392 psi 1-step decrease with Pc < 305 psi
Outdoor unit fan (FAN B)	High pressure control	Initial step for 90 seconds 1-step increase with Pc > 392 psi 1-step decrease with Pc < 305 psi
Four way valve (ST1)	OFF	
Electronic expansion valve (EXV A)	350P	
Electronic expansion valve (EXV B)	350P	
Electronic expansion valve (EXV C)	PI control	
Solenoid valve (SV4)	1000 seconds ON	After, Normal control
Solenoid valve (SV7)	Normal control	
Ending conditions	1000 seconds	

Table 22 —Startup Control in Heating Operation

COMPONENT	OPERATION	REMARKS
Compressor	Capacity control	Compressor operating frequency increases by 1 step / 1 second
Outdoor unit fan (FAN A)	T4 and capacity control	
Outdoor unit fan (FAN B)	T4 and capacity control	
Four way valve (ST1)	ON	
Electronic expansion valve (EXV A)	Heating EXV control	
Electronic expansion valve (EXV B)	Heating EXV control	
Electronic expansion valve (EXV C)	0P	
Solenoid valve (SV4)	200 seconds OFF?800 seconds ON	After, Normal control
Solenoid valve (SV7)	Normal control	
Ending conditions	1000 seconds	

Oil Return Operation

Table 23 —Oil Return Operation in Cooling Mode

OUTDOOR UNIT COMPONENT	PRE OIL RETURN OPERATION	OIL RETURN OPERATION	POST OIL RETURN OPERATION
Compressor	22 Hz + 20 Hz	68 Hz + 66 Hz	Normal control
Outdoor unit fan (FAN A)	Normal control	Normal control	Normal control
Outdoor unit fan (FAN B)	Normal control	Normal control	Normal control
Four way valve (ST1)	OFF	OFF	OFF
Electronic expansion valve (EXV A)	350P	480P	350P
Electronic expansion valve (EXV B)	350P	480P	350P
Electronic expansion valve (EXV C)	Normal control	Min 80P, PI control	Normal control
Solenoid valve (SV4)	Normal control	Normal control	Normal control
Solenoid valve (SV7)	Normal control	Normal control	Normal control
Ending conditions	75 seconds	120 seconds	

Table 23 — Indoor Unit Operation

STATUS	FAN	ELECTRONIC EXPANSION VALVE
Thermal ON	ON	ON
OFF	OFF	300P
Thermal OFF	OFF	300P

NOTE:

1. First, oil return operation will occur after 140 minutes from turning the power on to the system.
2. Next, oil return operation will occur after eight hours of cumulative compressor operation time.

Table 24 —Oil Return Operation in Heating Mode

OUTDOOR UNIT COMPONENT	PRE OIL RETURN OPERATION	OIL RETURN OPERATION	POST OIL RETURN OPERATION
Compressor	22 Hz + 20 Hz	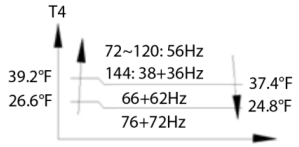	22 Hz + 20 Hz
Outdoor unit fan (FAN A)	Normal control	High pressure control	Normal control
Outdoor unit fan (FAN B)	Normal control	High pressure control	Normal control
Four way valve (ST1)	ON	OFF	ON
Electronic expansion valve (EXV A)	Normal control	480P	Normal control
Electronic expansion valve (EXV B)	Normal control	480P	Normal control
Electronic expansion valve (EXV C)	0P	80P	0P
Solenoid valve (SV4)	Normal control	Normal control	Normal control
Solenoid valve (SV7)	Normal control	Normal control	Normal control
Ending conditions	75 seconds	120 seconds	55 seconds

Table 25 —Indoor Unit Operation

STATUS	FAN	ELECTRONIC EXPANSION VALVE
Thermal ON	ON	480P
OFF	OFF	480P
Thermal OFF	OFF	480P

NOTES:

1. Oil return operation will occur after 140 minutes from turning the power on to the system.
2. Next, oil return operation will occur after eight hours of cumulative compressor operation time.

Table 26 —Defrost Operation

OUTDOOR UNIT COMPONENT	PRE DEFROST OPERATION	DEFROST OPERATION	POST DEFROST OPERATION
Compressor	30Hz + 28Hz	78Hz + 76Hz	30Hz + 28Hz
Outdoor unit fan (FAN A)	Normal control	OFF	Normal control
Outdoor unit fan (FAN B)	Normal control	OFF	Normal control
Four way valve (ST1)	ON	OFF	ON
Electronic expansion valve (EXV A)	Normal control	480P	Normal control
Electronic expansion valve (EXV B)	Normal control	480P	Normal control
Electronic expansion valve (EXV C)	0P	480P	0P
Solenoid valve (SV4)	Normal control	Normal control	Normal control
Solenoid valve (SV7)	Normal control	Normal control	Normal control
Ending conditions	75 seconds	T3 > 59°, or T > 600 seconds, or T4 < 32° or T3 > 50°F 120 seconds.	10 seconds

INDOOR UNIT OPERATION		COOLING OIL RETURN OPERATION
Status	Fan	Electronic Expansion Valve
Thermal ON	OFF	480P
OFF	OFF	480P
Thermal OFF	OFF	480P

Defrost starting condition: Defrost operation is started when the outdoor heat exchanger temperature becomes lower than threshold temperature. Defrost operation is conducted once in a maximum of two hours.

Table 27 —Restart Standby

COMPONENT	COOLING OPERATION	HEATING OPERATION
Compressor	OFF	OFF
Outdoor unit fan (FAN A)	OFF OFF	OFF OFF
Outdoor unit fan (FAN B)	OFF	OFF
Four way valve (ST1)	OFF OFF	Holds
Electronic expansion valve (EXV A)	350P	Initial pulse step
Electronic expansion valve (EXV B)	350P	Initial pulse step
Electronic expansion valve (EXV C)	0P	0P
Solenoid valve (SV4)	OFF	OFF
Solenoid valve (SV7)	OFF	OFF
Ending conditions	12 minutes	12 minutes

Overload Control

To maintain the required set point, the air flow of all indoor units are set to low speed if the connected capacity of the indoor units is > 120%. However, the air flow of the indoor units will return to normal once the connected capacity of indoor unit is < 105%.

Stopping Operation

Table 28 —When System is in Stop Mode

COMPONENT	OPERATION
Compressor	OFF
Outdoor unit fan (FAN A)	OFF OFF
Outdoor unit fan (FAN B)	OFF
Four way valve (ST1)	OFF OFF
Electronic expansion valve (EXV A)	350P
Electronic expansion valve (EXV B)	350P
Electronic expansion valve (EXV C)	0P
Solenoid valve (SV4)	OFF
Solenoid valve (SV7)	OFF
Ending conditions	Indoor unit thermostat is turned ON

Stop operation of follower units while header unit is still in operation in a modular system.

Table 29 —In Cooling Operation

COMPONENT	FOLLOWER UNIT OPERATION
Compressor	OFF
Outdoor unit fan (FAN A)	OFF
Outdoor unit fan (FAN B)	OFF
Four way valve (ST1)	ON
Electronic expansion valve (EXV A)	0 P
Electronic expansion valve (EXV B)	0 P
Electronic expansion valve (EXV C)	0 P
Solenoid valve (SV4)	OFF
Solenoid valve (SV7)	OFF
Ending conditions	Follower unit is required to operate.

Table 30 —In Heating Operation

COMPONENT	FOLLOWER UNIT OPERATION
Compressor	OFF
Outdoor unit fan (FAN A)	OFF
Outdoor unit fan (FAN B)	OFF
Four way valve (ST1)	ON
Electronic expansion valve (EXV A)	0 P
Electronic expansion valve (EXV B)	0 P
Electronic expansion valve (EXV C)	0 P
Solenoid valve (SV4)	OFF
Solenoid valve (SV7)	OFF
Ending conditions	Follower unit is required to operate.

PROTECTION CONTROL

High Pressure Protection Control

This high pressure protection control is used to protect the compressor from abnormal increase of high pressure in the system. When Pc ≥ 566 psi, outdoor unit will stop and the error code “P1” is displayed.

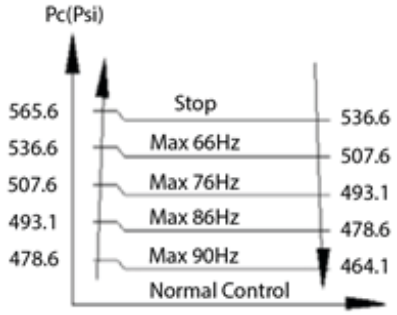

Fig. 30 —Cooling Operation

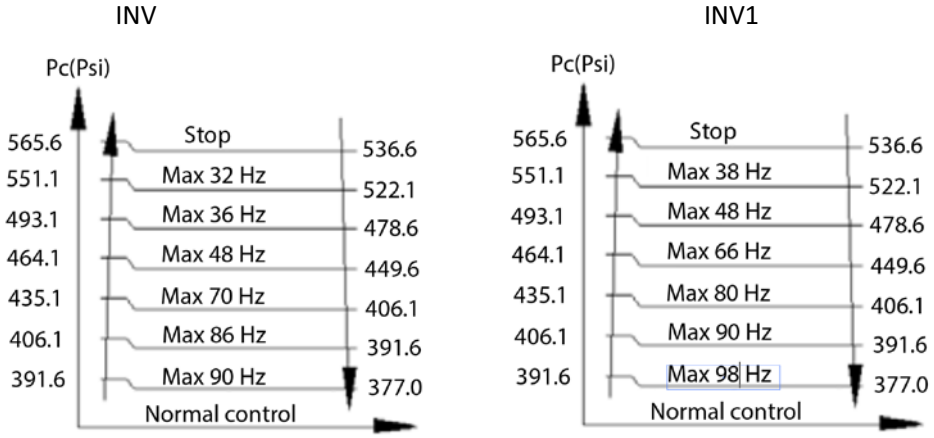

Fig. 31 —Heating Operation

Low Pressure Protection Control

When Pe < 7.25 psi, outdoor unit will stop and the error code “P2” is displayed.

Discharge Pipe Protection Control

This discharge pipe protection control is used to protect the compressor from abnormal increase of discharge temperature. When the discharge temperature > 248ºF, the outdoor unit will stop and the error code “P4” is displayed.

NOTE:

Each compressor has its own discharge pipe temperature protection control and operates individually in the following sequence.

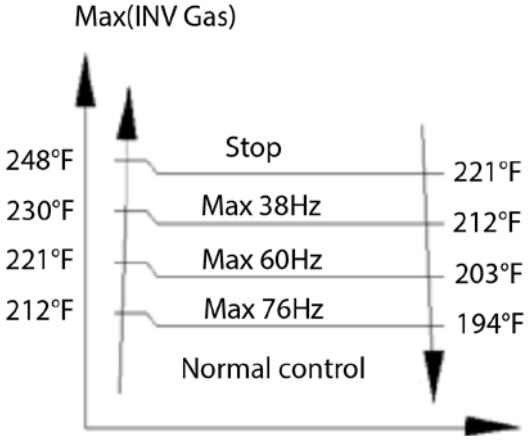

Fig. 32 —Cooling Operation

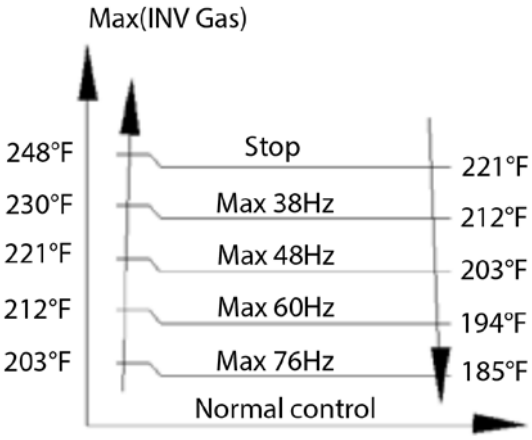

Fig. 33 —Heating Operation

Inverter Protection Control

Inverter protection control includes protection against abnormal overcurrent drawn by the invertor and abnormal increase of the inverter module heat exchanger fin temperature.

INVERTER OVERCURRENT PROTECTION CONTROL

If CF > 82Hz and CA ≥ A, the compressor operates down to 82Hz. After three minutes, if CA < A', the compressor operates normally.

If 72Hz < CF ≤ 82Hz and CA ≥ B, the compressor operates down to 72Hz. After three minutes, if CA < B', the compressor operates normally.

If 62Hz < CF ≤ 72Hz and CA ≥ C, the compressor operates down to 62Hz. After three minutes, if CA < C', the compressor operates normally.

If 48Hz < CF ≤ 62Hz and CA ≥ D, the compressor operates down to 48Hz. After three minutes, if CA < D', the compressor operates normally.

If CA ≥ E, the compressor operates down to 48Hz.

If CA ≥ F, the outdoor unit stops and displays error code "P3"

MODEL	A	A'	B	B'	C	C'	D	D'	E	F
38VMA072~120HDS5-1	33A	30A	32A	29A	30A	25A	27A	24A	33.5A	35A
38VMA144HDS5-1(INV)	31A	29A	30A	27A	28A	24A	25A	22A	31.5A	35A
38VMA144HDS5-1(INV1)	20A	18A	18A	16A	17A	15A	16A	14A	20.5A	22A
38VMA072~120HDS6-1	18A	15A	17A	14A	16A	13A	15A	12A	18.5A	21A
38VMA144HDS6-1(INV)	16A	13A	15A	12A	14A	11A	13A	10A	16.5A	19A
38VMA144HDS6-1(INV1)	11A	9A	9A	7A	8A	6.5A	7A	5.5A	11.5A	14A

NOTES:

CF is the operating rotational speed (Hz) of inverter compressor.

CA is the operating current of inverter compressor.

INVERTER FIN TEMPERATURE CONTROL

If Tfin ≥ 172.5^{0}F: 4Hz / two minutes down from current compressor frequency.

If fin ≥ 167^{0}F: 2Hz / two minutes down from current compressor frequency.

If Tfin < 163.5^{0}F continues for three minutes or more: 2 Hz / two minutes up from current compressor frequency is allowed.

If 163.5^{0}F ≤ Tfin < 167^{0}F: increase in compressor frequency is not allowed.

If Tfin > 174^{0}F outdoor unit stop, the error code " PL " is displayed.

NOTE: Tfin is the temperature of inverter module heat exchanger fin.

OTHER CONTROL

OUTDOOR UNIT ROTATION

In the case of modular systems, the outdoor unit rotation is used to prevent the compressor from burning out due to unbalanced oil level between compressors.

SEQUENCE OF OUTDOOR UNIT ROTATION

In the case of modular systems, each outdoor unit is given an operating priority.
Outdoor unit rotation makes it possible to change the operating priority of outdoor units. With the outdoor unit rotation control, the system ensures that every outdoor unit has equal run hour making sure the oil is balanced between the individual outdoor unit.

TIMING OF OUTDOOR UNIT ROTATION

After oil return operation, after defrosting operation, or at system startup.

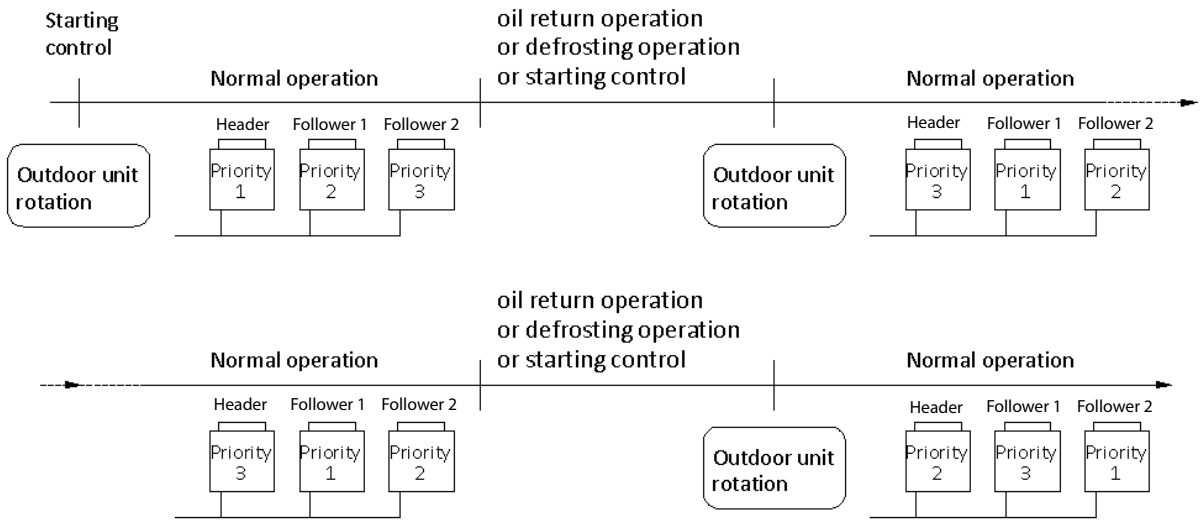

COOLING OPERATION PROHIBITION

Cooling operation is prohibited above 131ºF ambient temperature. Cooling operation is prohibited below 5ºF ambient temperature.

HEATING OPERATION PROHIBITION

Heating operation is prohibited above 77ºF ambient temperature.

FIELD SETTINGS

Table 31 —Switch Function Setting

SYMBOL	SWITCH	STATUS	FUNCTION	REMARK
S1	ON 1	0	Reserved	
S2	ON 1 2 3	000	Reserved	
S3	ON 1 2	00	Reserved	
S4	ON 1 2	00	Reserved	
S5	ON 1 2 3	000	Auto mode (Default)	
		001	Cooling priority mode	
		010	Indoor unit priority mode (IUD # 63) or Majority Mode	
		011	Heating mode only	
		100	Cooling mode only	
S6	ON 1 2	00	Automatic search address (Default)	
		01	Manual search address	
		10	Clear indoor units address	
S7	ON 1	0	Reserved	
S8	ON 1	0	Reserved	
S10	ON 1 2	00	Reserved	
S13	ON 1 2	00	Reserved	
S16	ON 1 2	00	Balance mode (Default)	
		01	High efficiency mode	
		10	Full power mode	
		11	Super power mode	
S17	ON 1 2	00	Balance mode (Default)	For heating mode
		01	High efficiency mode	
		10	Super high efficiency mode	
		11	Full power mode	
S18	ON 1 2	00	Balance mode (Default)	For cooling mode
		01	Full power mode	
		10	Dehumidification mode	
		11	High efficiency mode	
S22	ON 1 2	00	Reserved	

SYMBOL	SWITCH	STATUS	FUNCTION	REMARK
ENC1		0	Header unit	Outdoor unit address dial switch
		1	Follower unit	
		2	Follower unit	
ENC2		0-3	Reserved	
ENC4		0~7	Network address setting 0~7	Network address dial switch
ENC3 +S12		0~F	Setting the number of indoor units 0~15	
		000		
		0~F	Setting the number of indoor units 16~31	
		001		
		0~F	Setting the number of indoor units 32~47	
		010		
		0~F	Setting the number of indoor units 48~63	
		011		
		0	Setting the number of indoor units 64	
		100		

Instruction on Advanced Operation Mode

Advanced operation mode includes:

- Auto system check
- Forced cooling
- Forced heating
- Refrigerant recycle
- Refrigerant amount check
- Automatic refrigerant charging.

How to Set Advanced Mode Codes

1. Press and hold SW4 button for five seconds, and the LED will display "_n12"
2. To change the advance mode code (symbol), press SW5 (up) or SW6 (down) to scroll through the symbol list mentioned in the following table.
3. To set the advance mode code (symbol), press SW3 to confirm.
4. To change advance mode code (item), press SW5 (up) or SW6 (down) to scroll through item list mentioned in the following table.
5. To set the advance mode code (item), and press SW3 to confirm.
6. To exit the advance mode code anytime, press and hold SW3 button for five seconds.

Table 32 —List of Advanced Mode Codes

SYMBOL	FUNCTION	ITEM	DESCRIPTION
_n1_	Special function for debug	_n12	Forced cooling (62.6°F of IDU)
		_n13	Forced heating (86°F of IDU)
		_n14	Cooling test
		_n15	Heating test
_n2_	Refrigerant recycle function	_n21	Refrigerant recycle to outdoor units
		_n22	Refrigerant recycle to indoor units
		_n23	Refrigerant recycle to piping
		_n26	Maintenance operation
_n3_	Error query	_n31	Historical error query
		_n32	Clear the historical errors
_n4_	Night time setting	_n41	6/10h (default)
		_n42	6/12h
		_n43	8/10h
		_n44	8/12h
_n5_	Silent mode setting	_n51	Night silent mode
		_n52	Silent mode
		_n53	Super silent mode
		_n54	None silent mode (default)
_n8_	Static pressure mode setting	_n81	Standard static pressure mode (Default)
		_n82	Low static pressure mode (Reserved)
		_n83	Medium static pressure mode (Reserved)
		_n84	High static pressure mode (Reserved)
_nb_	Temperature unit setting	_nb1	Temperature unit: °C
		_nb2	Temperature unit: °F (Default)
_NC_	T4 sensor (outdoor temperature) threshold to enable Auxiliary Heat. Aux heat will enable when outdoor temperature falls 1.8 F below this temperature.	_nC1	Auxiliary heat disabled
		_nC2	5°F
		_nC3	15°F
		_nC4	25°F
		_nC5	35°F
		_nC6	45°F
		_nC7	55°F
		_nC8	65°F

NOTE: All codes are only available for master unit.

INSTRUCTION FOR ADVANCED MODE

Special function for debug:

“_n12” Forced Cooling

Enter “Forced cooling (_n12)” mode. All indoor units will run in cooling mode, and the forced cooling mode will be exited automatically after running 60 minutes.

“_n13” Forced Heating

Enter “Force heating (_n13)”mode. All indoor units will run in heating mode, and the forced heating mode will be exited automatically after running 60 minutes.

REFRIGERANT RECYCLING OPERATION

"_n21" Refrigerant recycles to outdoor units

1. Close the liquid stop valve.
2. Enter "Refrigerant recycle to outdoor units (_n21)" mode.
3. Let the unit run for a while, and then close the gas valve quickly.

"_n22" Refrigerant recycles to indoor units

1. Close the liquid stop valve.
2. Enter "Refrigerant recycle to indoor units (_n22)" mode.
3. Let the unit run for a while, and then close the gas valve quickly.

"_n23" Refrigerant recycled to piping

Enter "Refrigerant recycle to piping (_n23)" mode and all indoor valves will open.

SNOW-BLOWING FUNCTION

1. Press SW5 button on spot check box of the header outdoor unit to enter the snow-blowing function.
   It will display **"Sn0"** for fifteen seconds.
2. Press SW5 button again to exit the snow-blowing function.
   It will display **"Sn1"** for fifteen seconds.
   The snow-blowing modes can be selected through S11 dip switch on spot check box.

MODE	HEAVY SNOW MODE	LIGHT SNOW MODE
S11		

If the unit receives a startup signal, it will exit the snow-blowing function.

TROUBLESHOOTING

⚠ CAUTION

Make sure power is disconnected from the unit before connecting or disconnecting any port/connector on the PC board to avoid any potential damage.

Table 33 —Troubleshooting Codes

CODE	DEFINITION
0E0	Communication error between ODUs (Displayed on the follower unit only)
0E2	Communication error between ODU and IDU
0E4	T3 or T4 temperature sensor error
0E5	Voltage protection
0E8	Incorrect ODU address
10H0 20H0	Communication error between main control chip and compressor drive chip
0H1	Communication error between main control chip and communication chip
0H2/0H3	Incorrect number of ODUs (Displayed on the header unit only)
0H7	Incorrect number of IDUs
0H8	High pressure sensor error
0Hb	Low pressure sensor error
10F1 20F1	PTC error
0F3	Temperature sensor (T5) error
0F4	Temperature sensor (T6) error
0F5	Temperature sensor (T7) error
0F6	Electronic expansion valve error
10Hd 20Hd	Follower unit error
0P1	Current leakage, Discharge temperature switch or High pressure protection
0P2 0H5	Low pressure protection
0P3	Over current protection for compressor
0P4 0H6	Discharge temperature protection
0P5	High temperature protection for pipe temperature
0P9 0H9	DC fan protection
0PL 0C7	High module temperature protection
L0~L9 10H4/20H4	Compressor INV module protection
A tL	Ambient temperature limit operation

0E0: Communication Error Between ODUs

1. Error display:
   ODU display: 0E0
2. Applicable models:
   38VMA***HDS5-1 (208/230V-3Ph-60Hz)
   38VMA***HDS6-1 (460V-3Ph-60Hz)
3. Error Definition
   Communication error between header unit and follower unit (display on follower unit).
4. Possible causes:
   - Incorrect address setting of ODU
   - Communication lines between ODUs is not installed correctly
   - Wiring between main board and communication adapter is not installed correctly
   - Damaged main board or communication terminal block of ODU

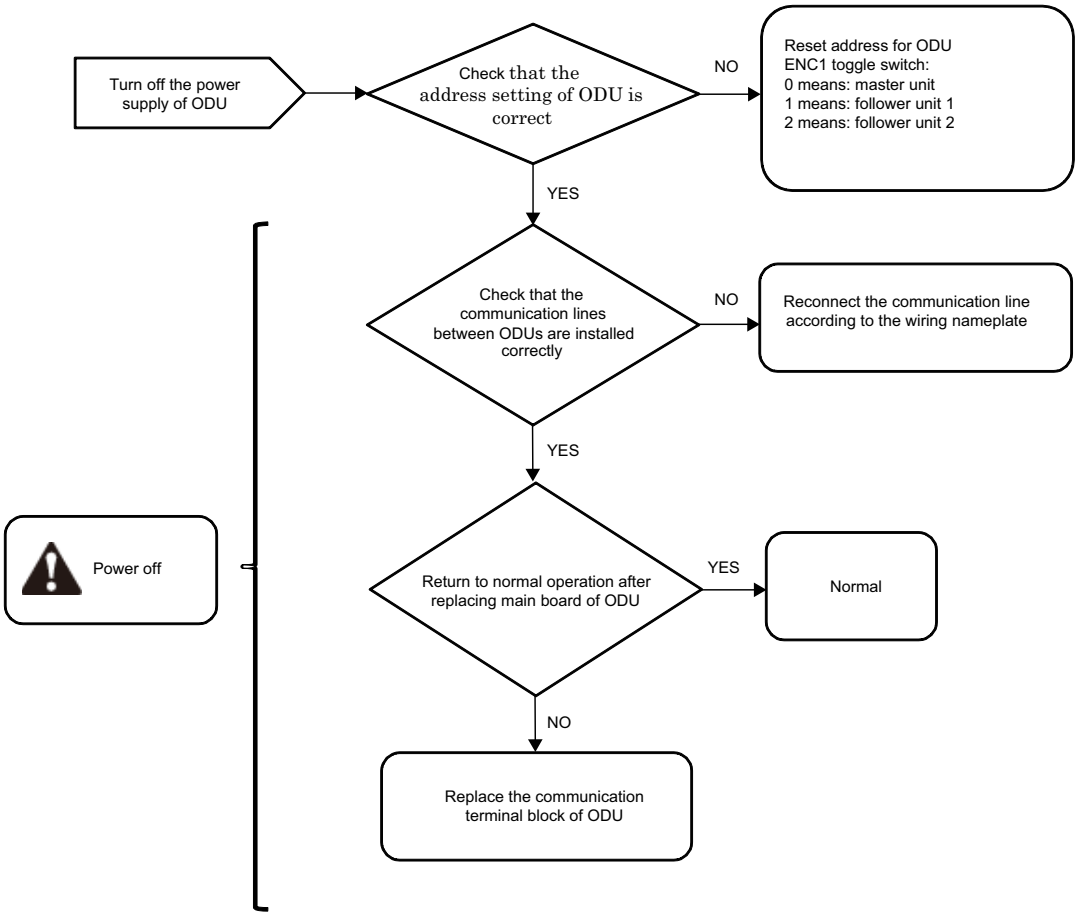

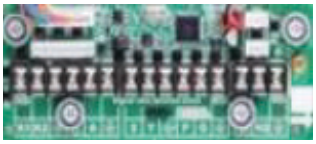

Fig. 34 —Communication Terminal Block of ODU

0E2: Communication Error Between ODU and IDU

1. Error display:
   ODU display: 0E2
2. Applicable models:
   38VMA***HDS5-1 (208/230V-3Ph-60Hz)
   38VMA***HDS6-1 (460V-3Ph-60Hz)
3. Error definition:
   Communication Error between ODU and IDU
4. Possible causes:
   - Communication lines between ODU and IDU are installed incorrectly
   - Improper power supply for IDU
   - Damaged communication adapter and main board of ODU
   - Communication line over 3937 feet
   - External interference (e.g. electromagnetic)

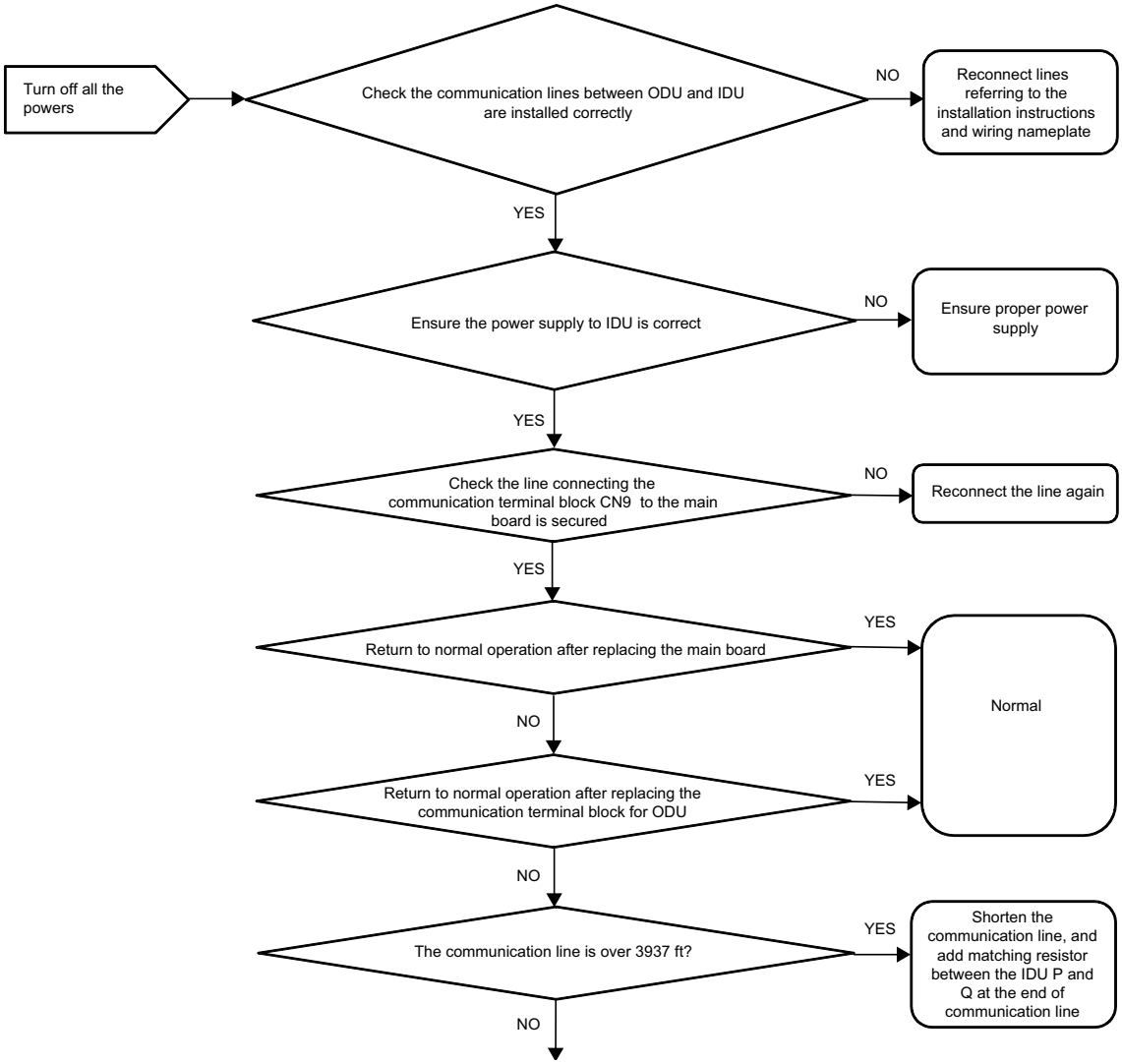

Fig. 35 —Communication Terminal Block of ODU

0E4: T3 or T4 Temperature Sensor Error

1. Error display:
   ODU display: 0E4
2. Applicable models:
   38VMA***HDS5-1 (208/230V-3Ph-60Hz)
   38VMA***HDS6-1 (460V-3Ph-60Hz)
3. Error definition and inspection:
   The temperature sensor (T3 or T4) on main board is short or damage. The test voltage should be > 4.95V or < 0.05V.
4. Possible causes:
   - Loose connection at port on main control board
   - Damaged sensor
   - Damaged main board

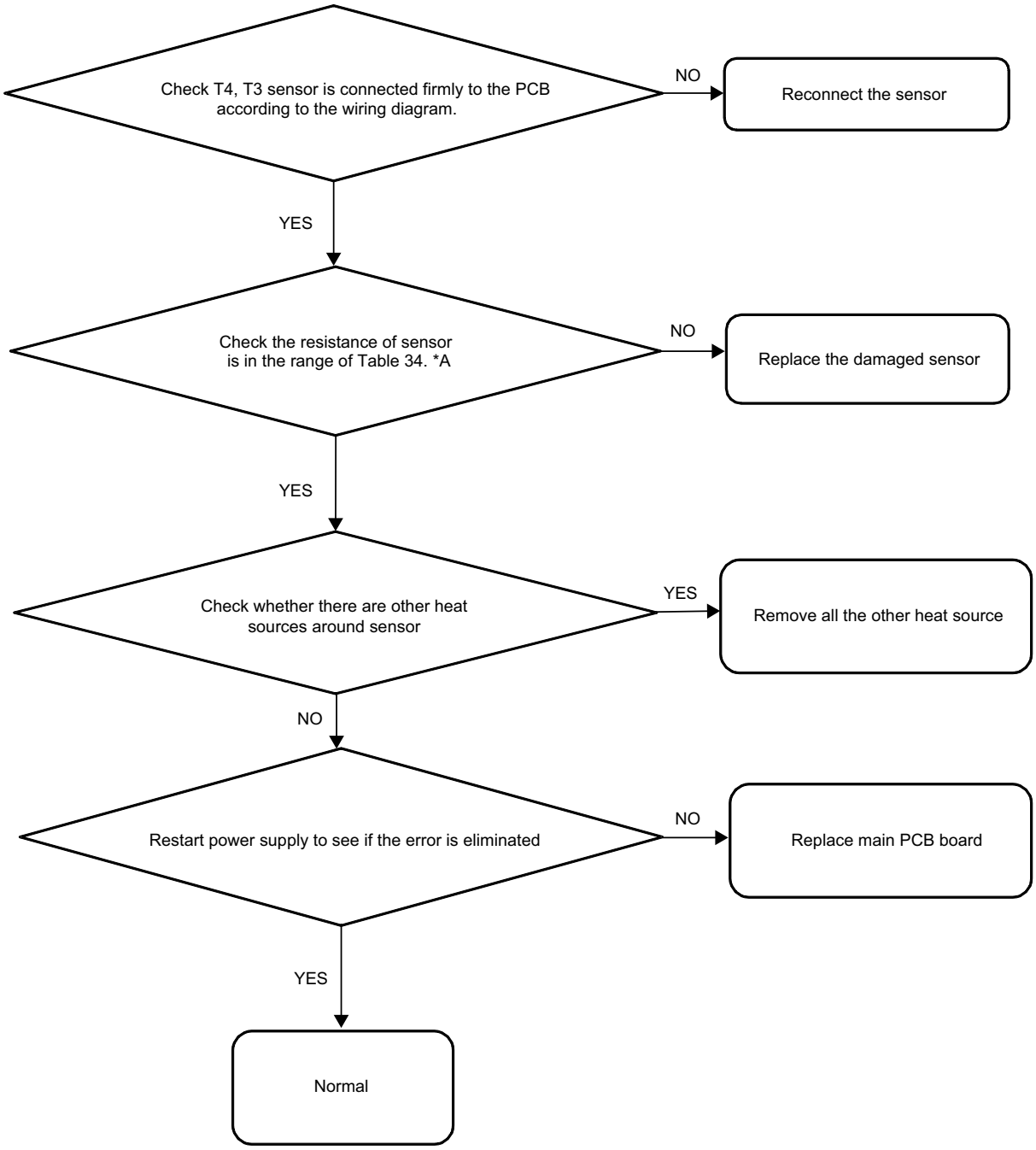

*A Refers to Resistant of Temperature sensor in Appendix.

0E5: Voltage Protection

1. Error display:
   ODU display: 0E5
2. Applicable models:
   38VMA***HDS5-1 (208/230V-3Ph-60Hz)
   38VMA***HDS6-1 (460V-3Ph-60Hz)
3. Error definition:
   Voltage of the ODU is not within the acceptable range.
4. Possible causes:
   - Improper voltage
   - Lack of power supply phase for the ODU
   - Improper wiring within electric control box
   - Damaged main board of ODU

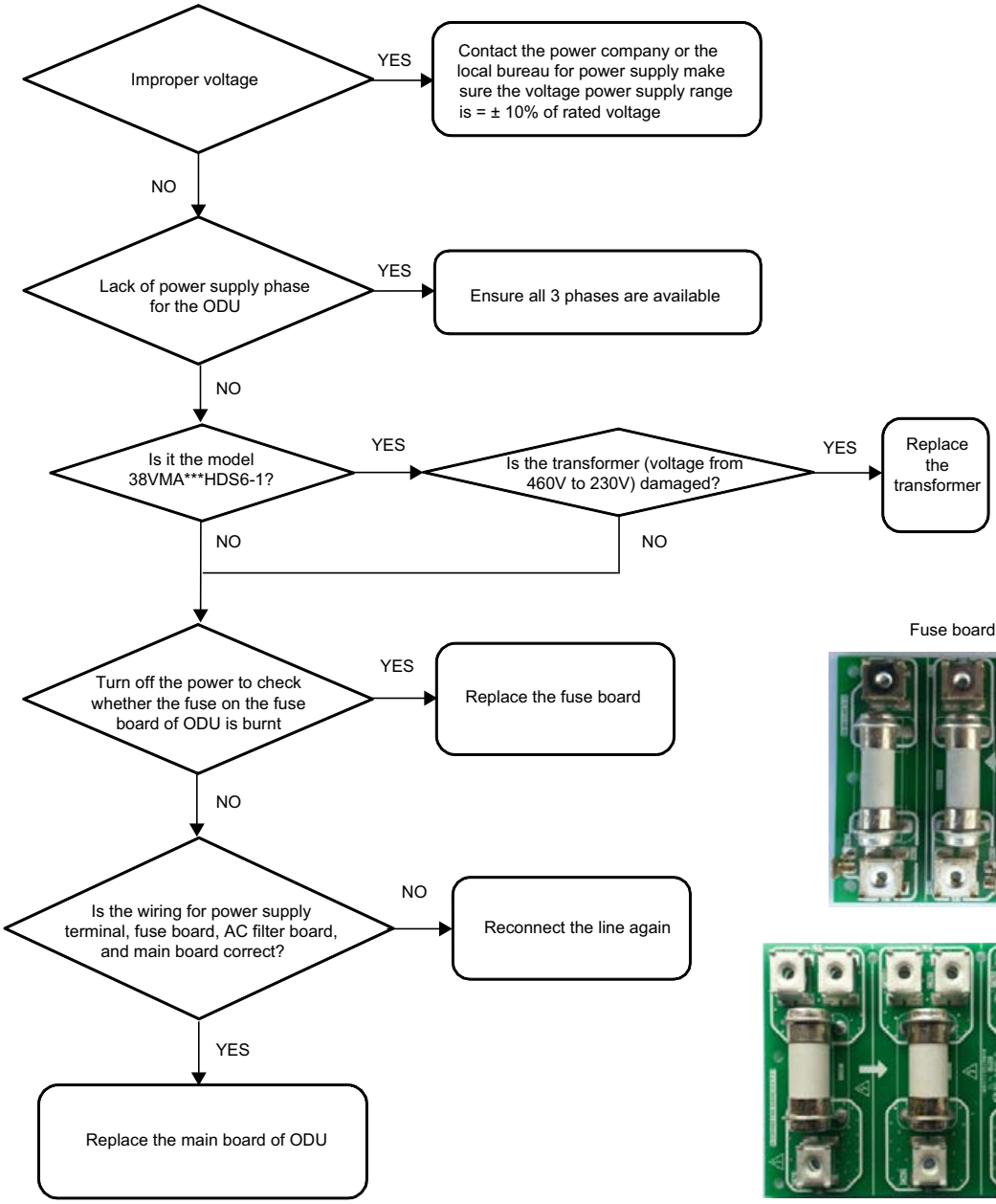

Fuse board

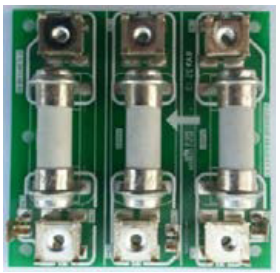

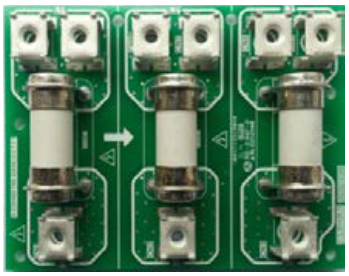

0E8: Incorrect ODU Address

1. Error display:

   ODU display: 0E8

2. Applicable models:

   38VMA***HDS5-1 (208/230V-3Ph-60Hz)

   38VMA***HDS6-1 (460V-3Ph-60Hz)

3. Error definition:

   The address of ODU is > 2.

4. Possible causes:
   - Incorrect address setting for ODU
   - Damaged main board of ODU

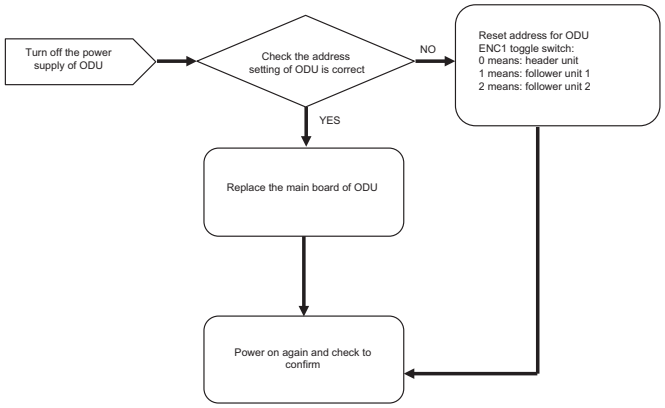

20HO 10H0: Communication Error Between Main Control Board Chip and Compressor Drive Chip

1. Error display:

   ODU display: 10H0 20HO

2. Applicable models:

   38VMA***HDS5-1 (208/230V-3Ph-60Hz)

   38VMA***HDS6-1 (460V-3Ph-60Hz)

3. Error definition:

   10H0: Communication error of main control chip and drive chip of compressor. A20H0: Communication error of main control chip and drive chip of compressor B.

4. Possible causes:
   - Improper power supply
   - Damaged transformer
   - Damaged main board

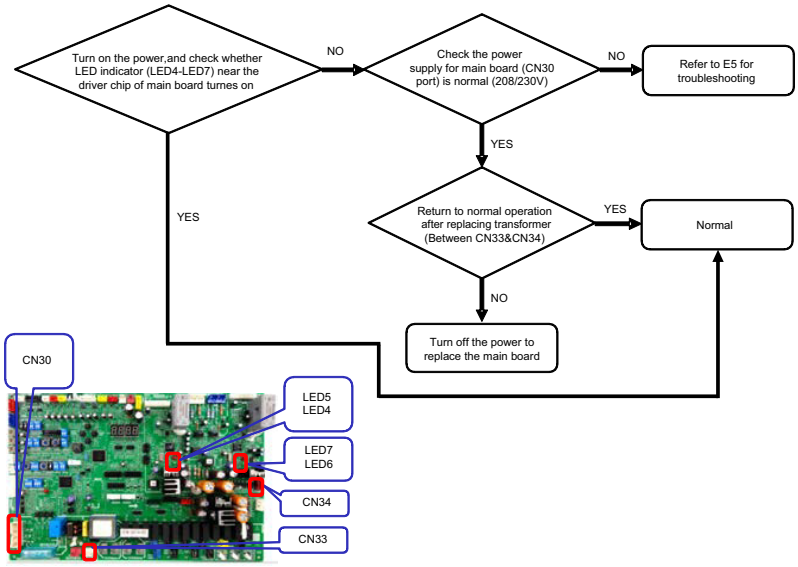

0H1: Communication Error Between Main Control Chip and Communication Chip

1. Error display:

   ODU display: 0H1

2. Applicable models:

   38VMA***HDS5-1 (208/230V-3Ph-60Hz)

   38VMA***HDS6-1 (460V-3Ph-60Hz)

3. Error definition:

   Communication error of main control chip IC55 and communication chip IC33 on main board.

4. Possible causes:
   - Improper power supply
   - Damaged transformer
   - Damaged main board

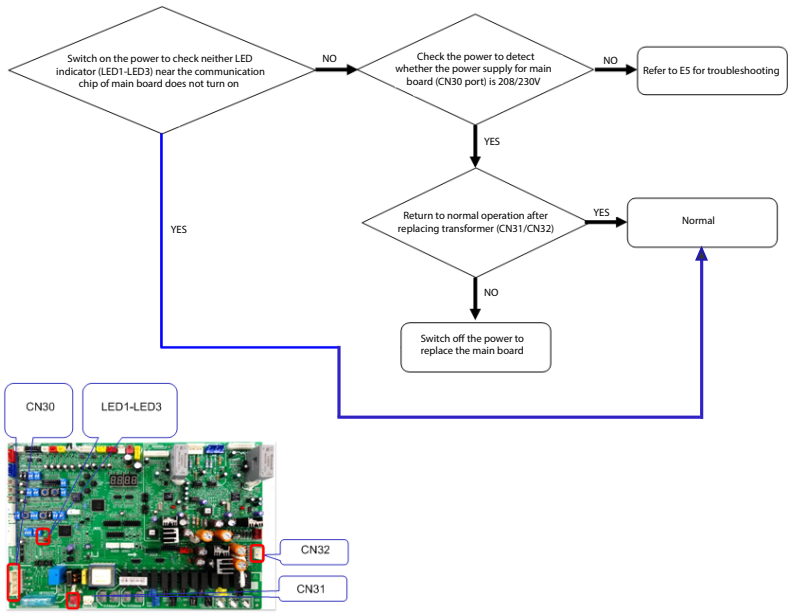

0H2~0H3: Incorrect Number of ODUs

1. Error display:

   ODU display: 0H2 or 0H3 (displayed on header unit only)

2. Applicable models:

   38VMA***HDS5-1 (208/230V-3Ph-60Hz)

   38VMA***HDS6-1 (460V-3Ph-60Hz)

3. Error definition:

   0H2 -- The number of physical connected follower units to master unit is less than ENC1 rotary switch setting. 0H3 -- The number of physical connected follower units to master units is more than ENC1 rotary switch setting.

4. Possible causes:
   - Improper power supply for ODU
   - Duplicated address setting for ODU
   - Communication lines between ODUs are installed incorrectly
   - Damaged communication terminal block or main board for ODU

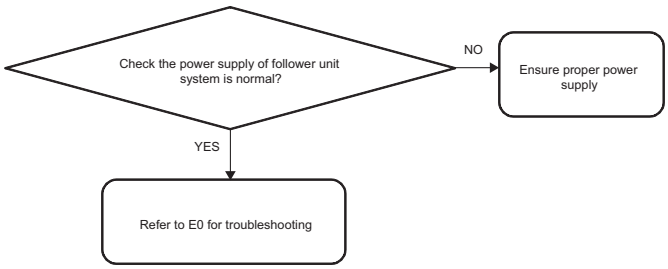

0H7: Incorrect Number of IDUs

1. Error display:

   ODU display: 0H7
2. Applicable models:

   38VMA***HDS5-1 (208/230V-3Ph-60Hz)

   38VMA***HDS6-1 (460V-3Ph-60Hz)
3. Error definition:

   The number of physically connected indoor units to an outdoor unit does not match the ENC3 + S12 setting.
4. Possible causes:
   - Incorrect number of IDUs set for the main board of the ODU
   - Duplicated addresses exist for the IDUs in the system
   - IDU power is OFF
   - The communication line between IDU and ODU or some IDUs are installed incorrectly
   - Damaged individual main board of IDU
   - Damaged main board of ODU

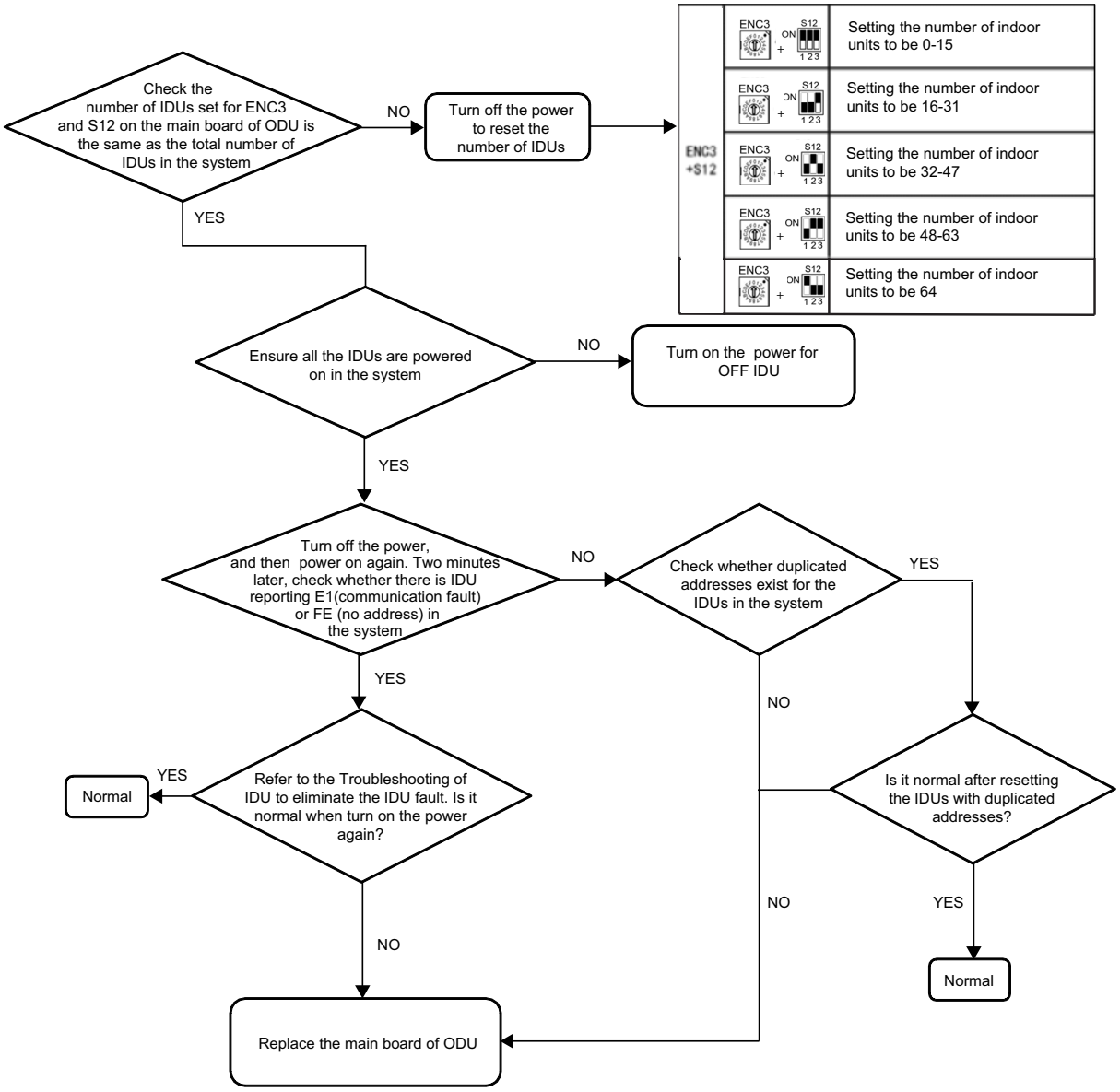

0H8: High Pressure Sensor Error

1. Error display:

   ODU display: 0H8
2. Applicable models:

   38VMA***HDS5-1 (208/230V-3Ph-60Hz)

   38VMA***HDS6-1 (460V-3Ph-60Hz)
3. Error definition:
4. In the condition of unit operation or T4 > -10°C, when the detected HIGH PRESS < 0.3MPa lasts for twenty seconds, the high pressure sensor error is reported.
5. Possible causes:
   - The high pressure error is caused by lack of refrigerant in the system
   - Damaged sensor
   - Damaged main board

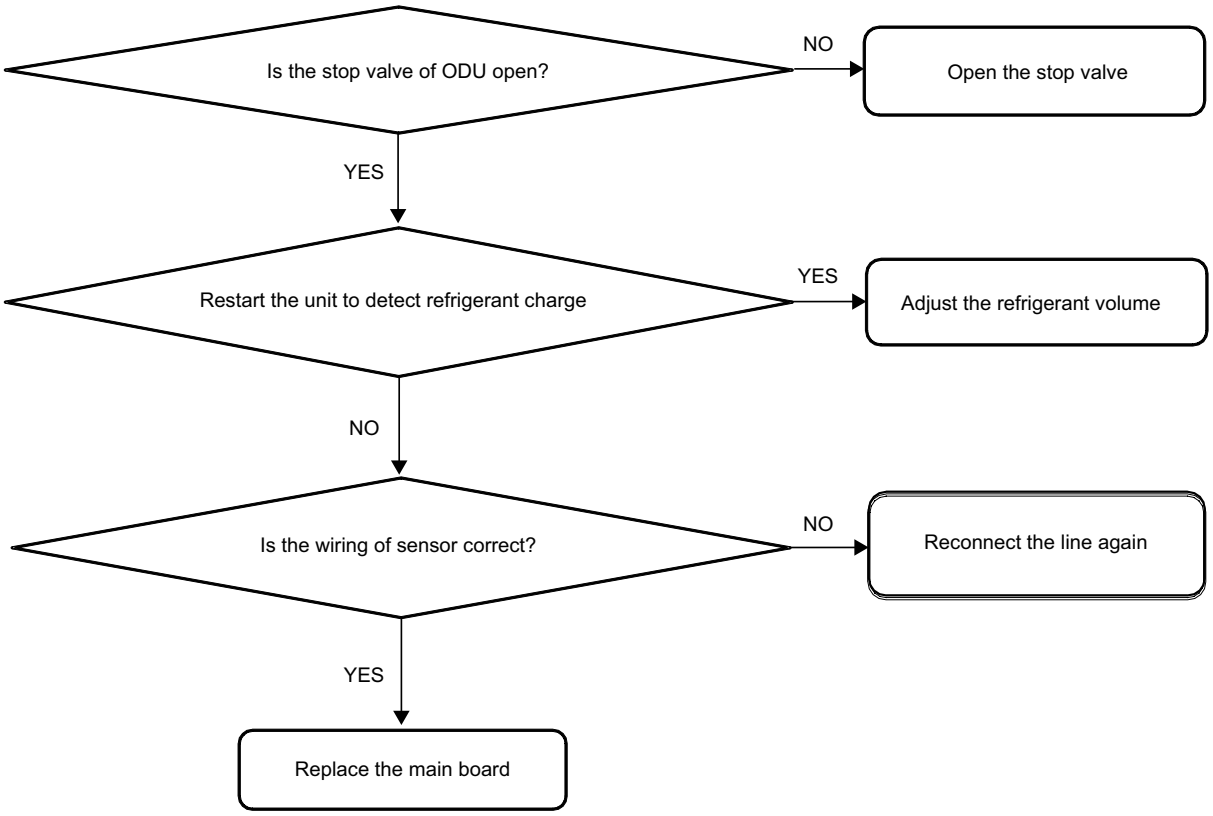

0Hb: Low Pressure Sensor Error

1. Error display:
   ODU display: 0Hb
2. Applicable models:
   38VMA***HDS5-1 (208/230V-3Ph-60Hz)
   38VMA***HDS6-1 (460V-3Ph-60Hz)
3. Error definition:
   Detect the voltage value of low pressure sensor for open or short circuit. If so, an error will be reported.
4. Possible causes:
   - The low pressure error is caused by lack of refrigerant in the system
   - Damaged sensor
   - Damaged main board

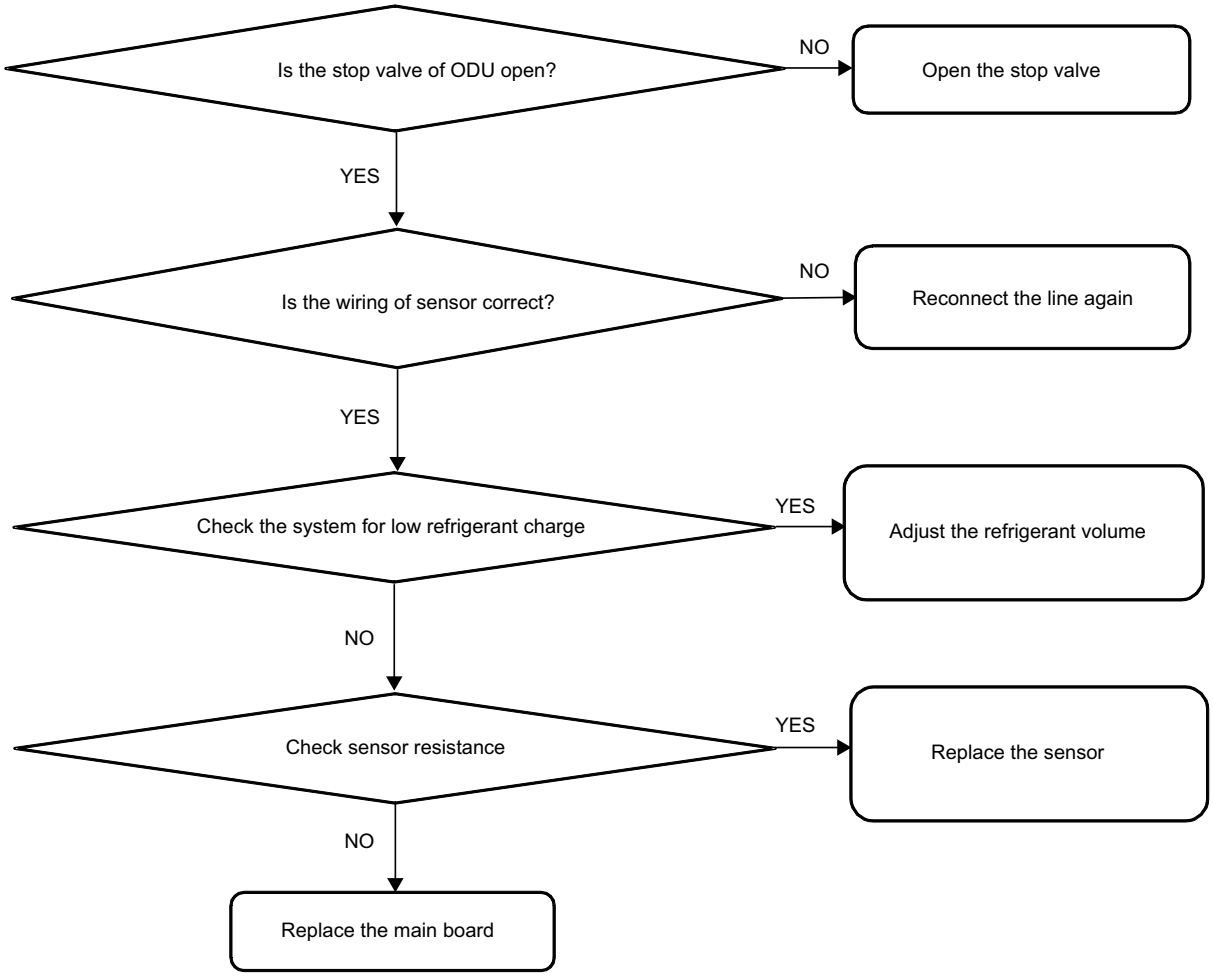

10F1 20F1: PTC Error

1. Error display:

   ODU display: 10F1 20F1

2. Applicable models:

   38VMA***HDS5-1 (208/230V-3Ph-60Hz)

   38VMA***HDS6-1 (460V-3Ph-60Hz)

3. Error definition:
4. After turning the system power on, the DC bus voltage is outside the allowable range for more than ten seconds.

   38VMA***HDS5-1(208/230V-3Ph-60Hz): 150-500V

   38VMA***HDS6-1 (460V-3Ph-60Hz): 300-900V

5. Possible causes:
   - Improper, disconnected, or damaged wiring from the inverter module to the main board CN36/CN39
   - Improper or disconnected wiring at PTC of DC filter board
   - Damaged PTC on the DC filter board
   - Damaged main board

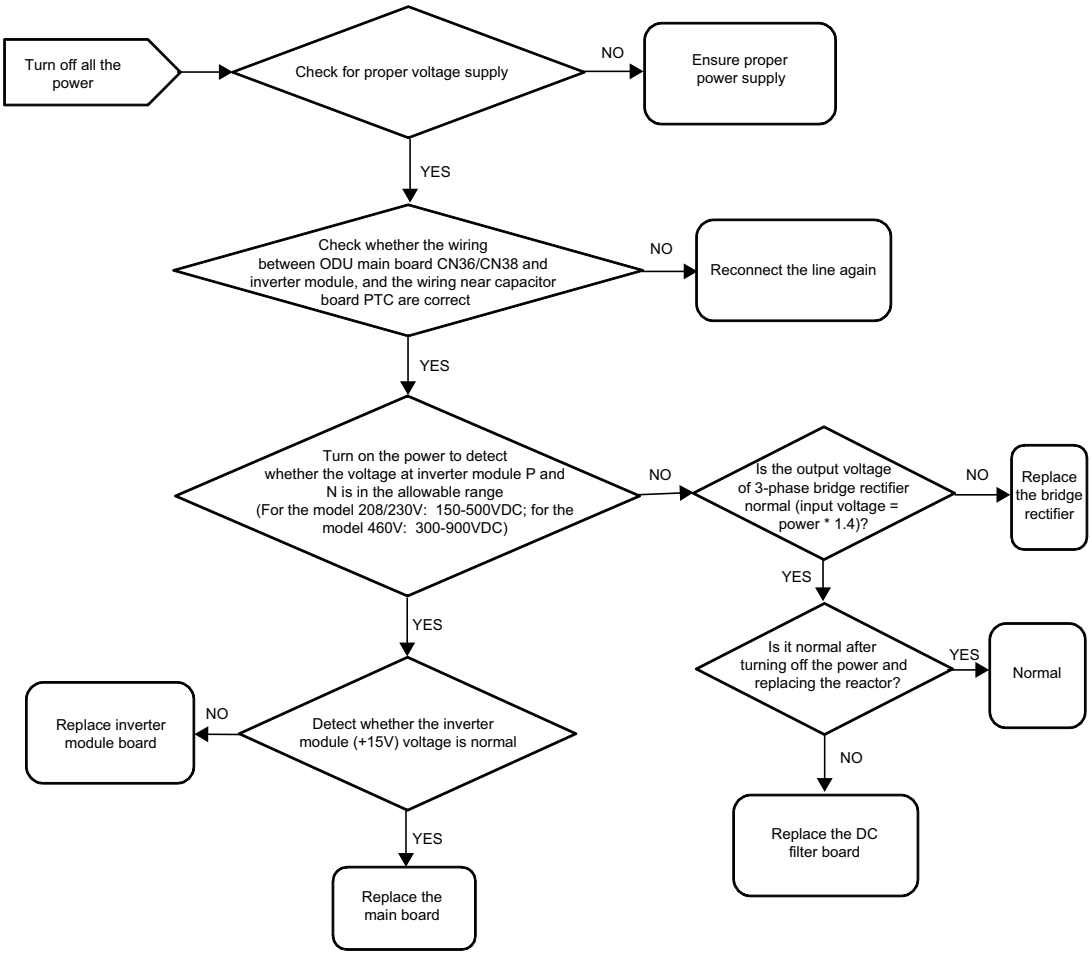

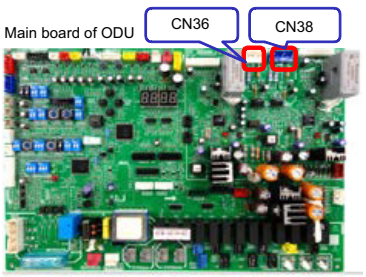

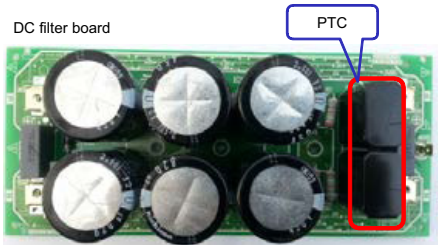

0F3~0F5: Temperature Sensor Error

1. Error display:
   ODU display: 0F3/0F4/0F5
2. Applicable models:
   38VMA***HDS5-1 (208/230V-3Ph-60Hz)
   38VMA***HDS6-1 (460V-3Ph-60Hz)
3. Error definition:
   The sensor is damaged or shorted. The test voltage is > 4.95V or < 0.05V
   0F3: T5- Liquid tube temperature sensor error
   0F4: T6- Sub-cooler outlet temperature sensor error
   0F5: T7- Compressor return gas temperature sensor error
4. Possible causes:
   - Improper connection between sensor and main board
   - Damaged sensor
   - Damaged main board

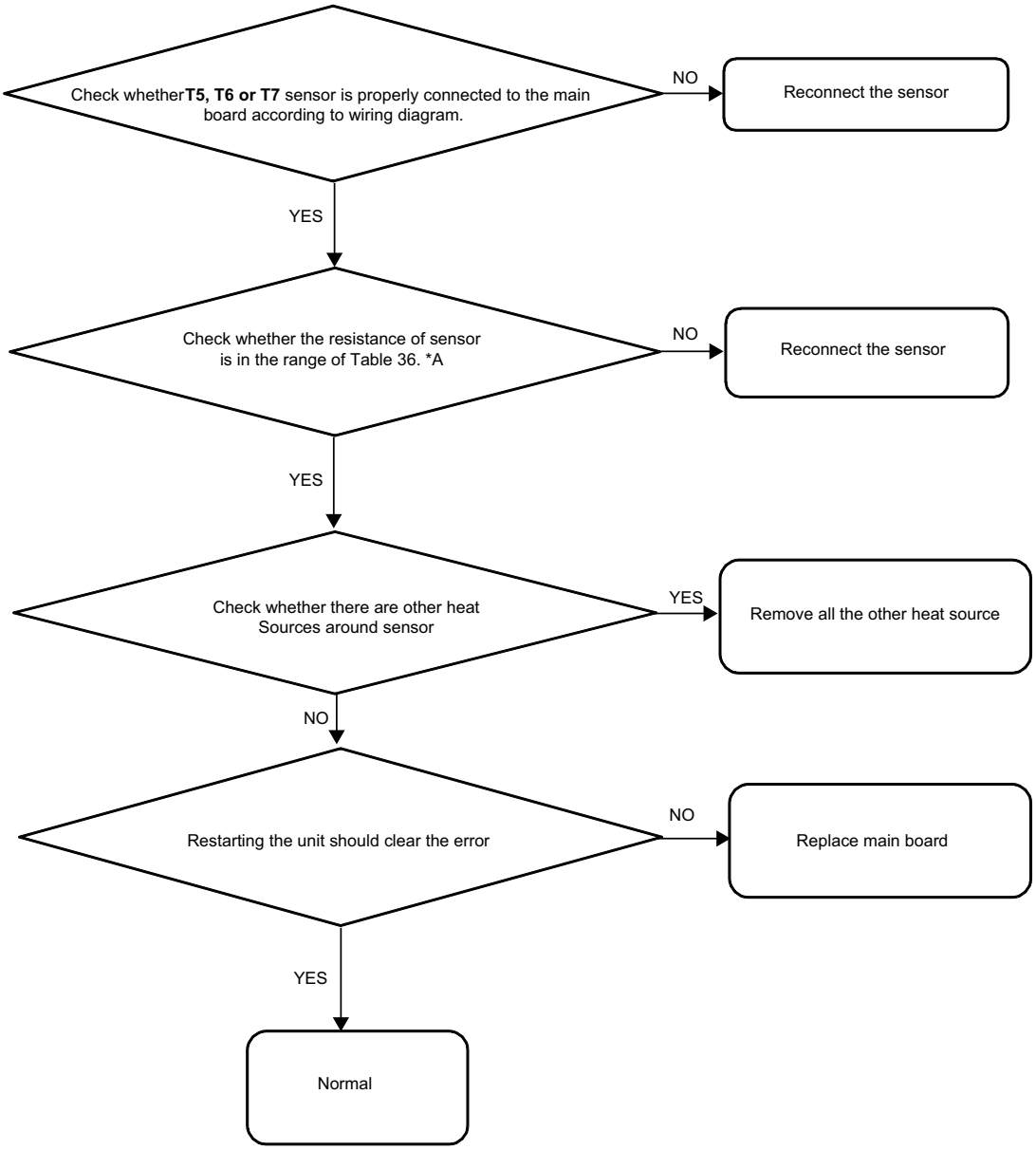

*A Refer to Resistant of Temperature sensor in Appendix.

0F6: Electronic Expansion Valve Error

1. Error display:
   ODU display: F6
2. Applicable models:
   38VMA***HDS5-1 (208/230V-3Ph-60Hz)
   38VMA***HDS6-1 (460V-3Ph-60Hz)
3. Error definition:
   Abnormal feedback signal detected for the electronic expansion valve in the system.
4. Possible causes:
   - Solenoid coil for electronic expansion valve is installed incorrectly
   - Improper wiring of the solenoid coil for electronic expansion valve
   - Damaged electronic expansion valve or solenoid coil
   - Damaged main board

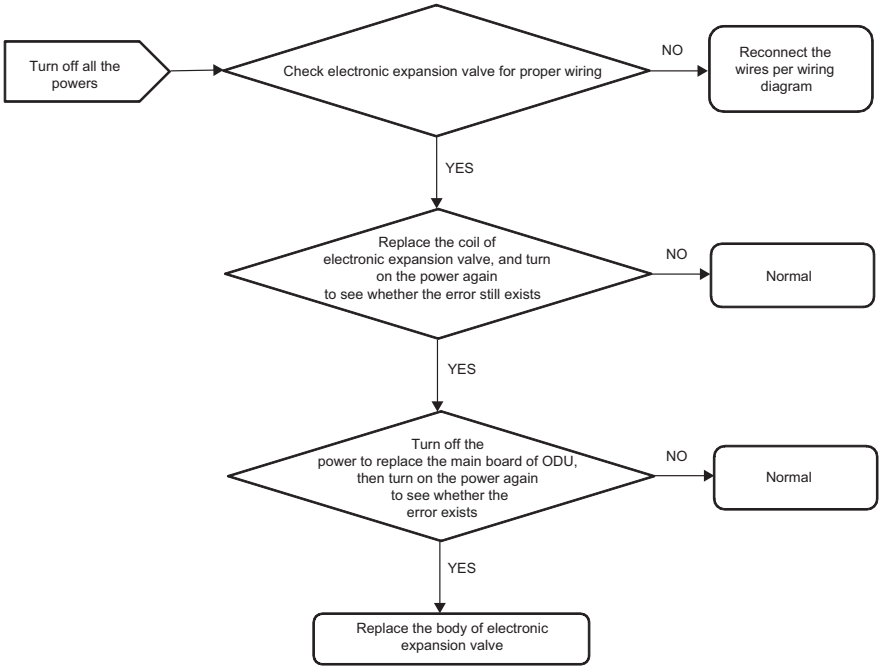

10Hd 20Hd: Follower Unit Error

1. Error display:
   ODU display: 10Hd 20Hd (displayed on header unit only)
2. Applicable models:
   38VMA***HDS5-1 (208/230V-3Ph-60Hz)
   38VMA***HDS6-1 (460V-3Ph-60Hz)
3. Error definition:
   Error on follower unit is reported on the header unit.
4. Possible causes:
   Error on follower unit

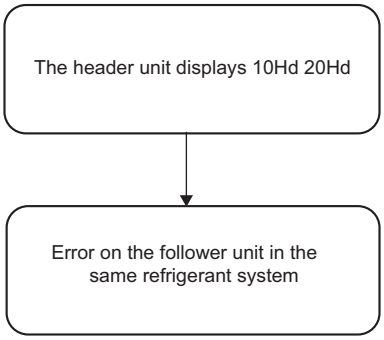

0P1: Current Leakage Error

1. Error display:
   ODU display: 0P1
2. Applicable models:
   38VMA***HDS5-1 (208/230V-3Ph-60Hz)
   38VMA***HDS6-1 (460V-3Ph-60Hz)
3. Error definition:
   Current leakage on ODU > 90–100mA and LED1 flashes on the leakage protection board.
4. Possible causes:
   - Abnormal insulation resistance and leakage for unit parts
   - Damaged leakage current transformer
   - Damaged main board

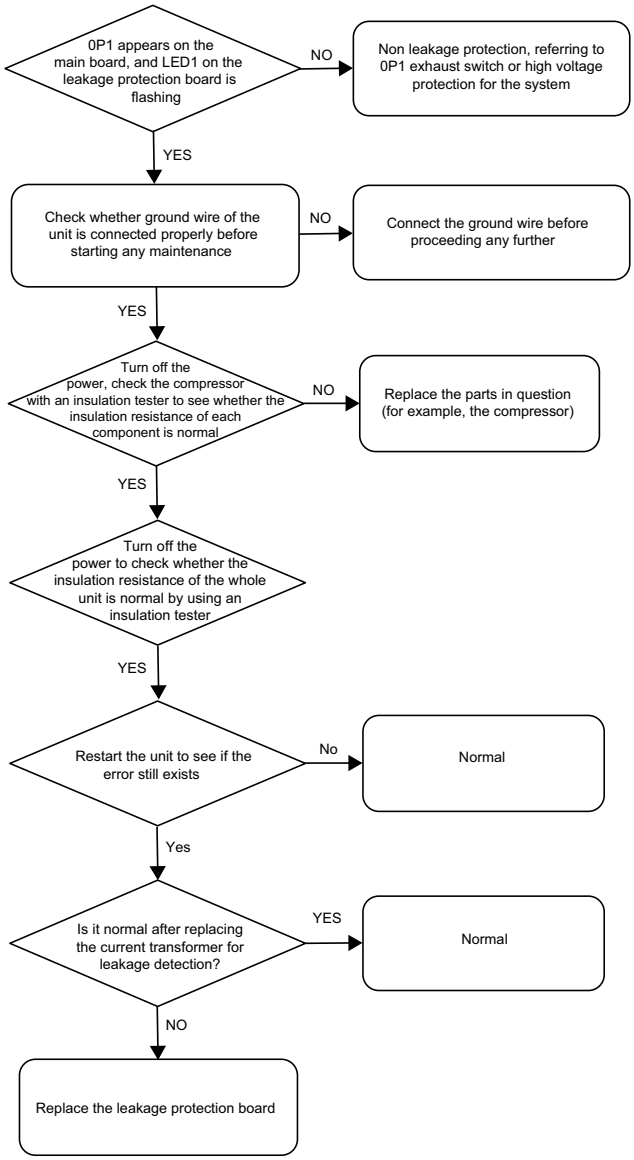

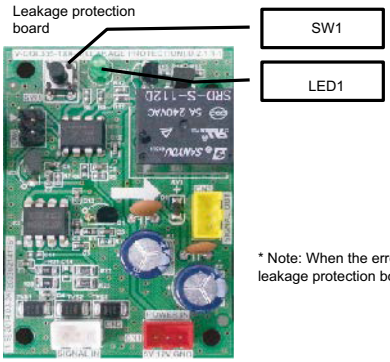

* Note: When the error of leakage protection is triggered, it is necessary to press the leakage protection board SW1 for 3 seconds and then the error can be recovered.

0P1: Discharge Temperature Switch or High Pressure Protection

1. Error display:
   ODU display: 0P1
2. Applicable models:
   38VMA***HDS5-1 (208/230V-3Ph-60Hz)
   38VMA***HDS6-1 (460V-3Ph-60Hz)
3. Error definition:
   - Operation of discharge temperature switch (the detected discharge temperature ≥ 239 °F)
   - The detected pressure of high pressure sensor ≥ 565.6 psi
4. Possible causes:
   - High pressure due to excess refrigerant in the system
   - High compressor discharge temperature caused by lack of refrigerant in the system
   - Damaged main board
   - Improper operation of sub-cooler valve resulting in the loss of cooling function
   - Low pressure resulted due to refrigerant blockage on high pressure side resulting in solenoid valve error (IDU, ODU)
   - Improper operation of relief valve on the refrigerant system due to the solenoid valve error (IDU, ODU)
   - The high pressure is too high and the low pressure is too low because of blockage in the system

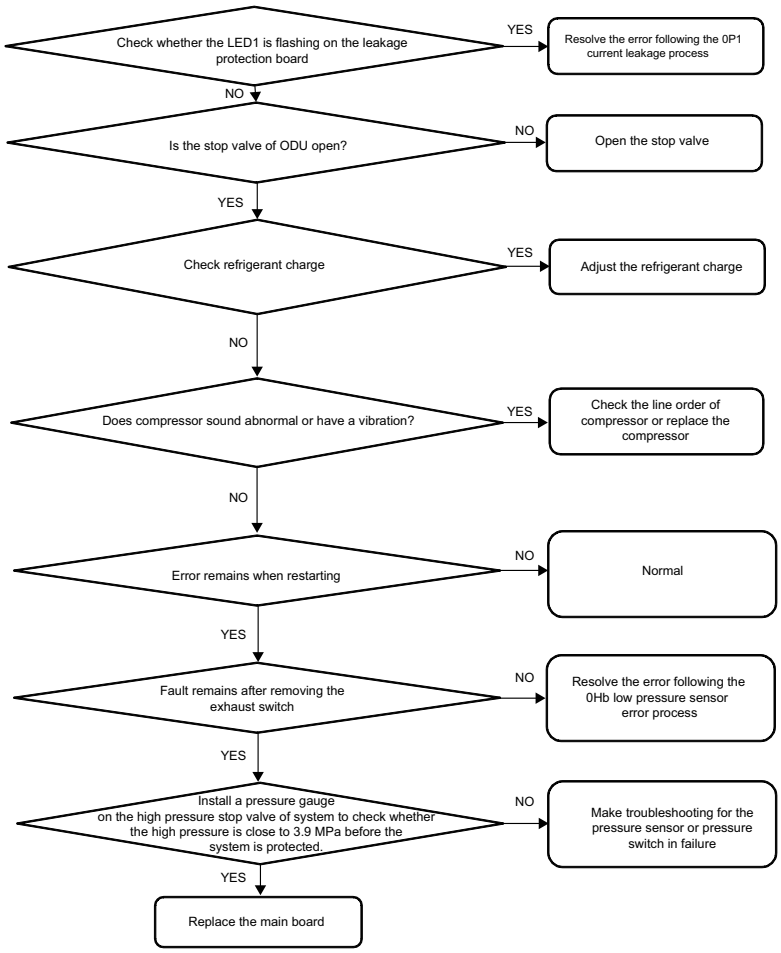

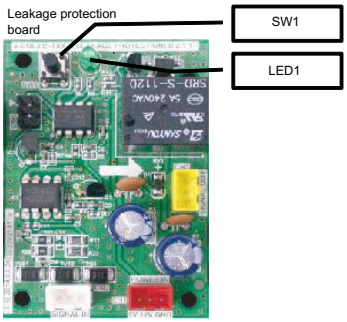

0P2 0H5: Low Pressure Protection

1. Error display:
   ODU display: 0H5/0P2
2. Applicable models:
   38VMA***HDS5-1 (208/230V-3Ph-60Hz)
   38VMA***HDS6-1 (460V-3Ph-60Hz)
3. Error definition:
   0P2 error is reported when the registered value of low pressure sensor on the main board is < 1.45 psi.
   0H5 error is reported when 0P2 occurs five times with in a period of 100 minutes.
4. Possible causes:
   - The low pressure error is caused by lack of refrigerant in the system
   - Damaged sensor
   - Damaged main board
   - Low pressure because of refrigerant blockage on the high pressure side due to improper operation of the solenoid valve (IDU, ODU)

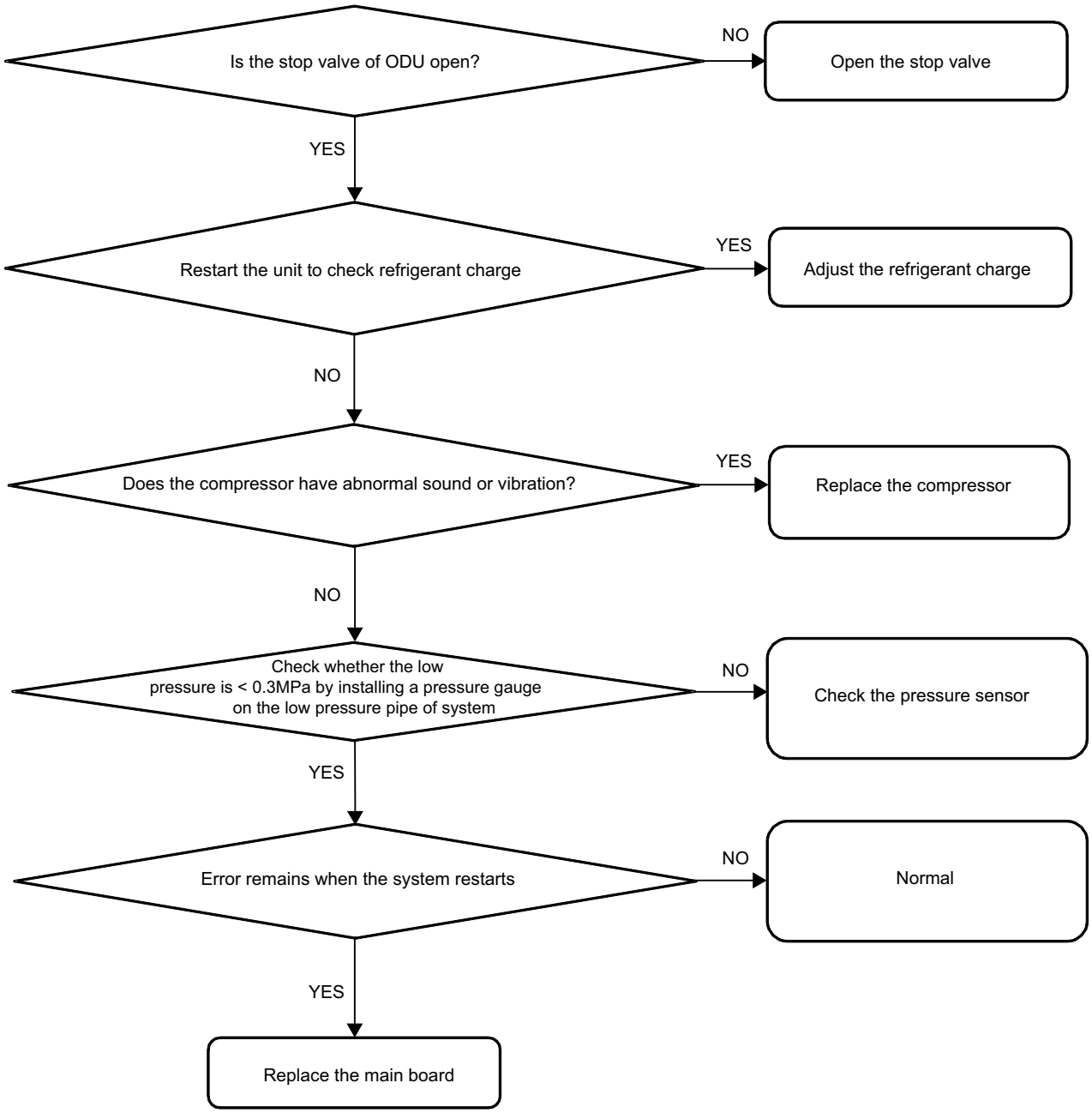

0P3: Over Current Protection for Compressor

1. Error display:
   ODU display: 0P3
2. Applicable models:
   38VMA***HDS5-1 (208/230V-3Ph-60Hz)
   38VMA***HDS6-1 (460V-3Ph-60Hz)
3. Error definition:
   Compressor current out of allowable range.
4. Possible causes:
   - Stop valve is closed
   - Improper power supply voltage
   - Incorrect wiring for the solenoid valve
   - Damaged electromagnetic valve
   - Damaged main board
   - Damaged module board
   - Damaged compressor
   - Sudden interruption of power for IDU
   - Excess refrigerant in the system resulting in liquid slugging in the compressor
   - Damaged electronic expansion valve in the IDU

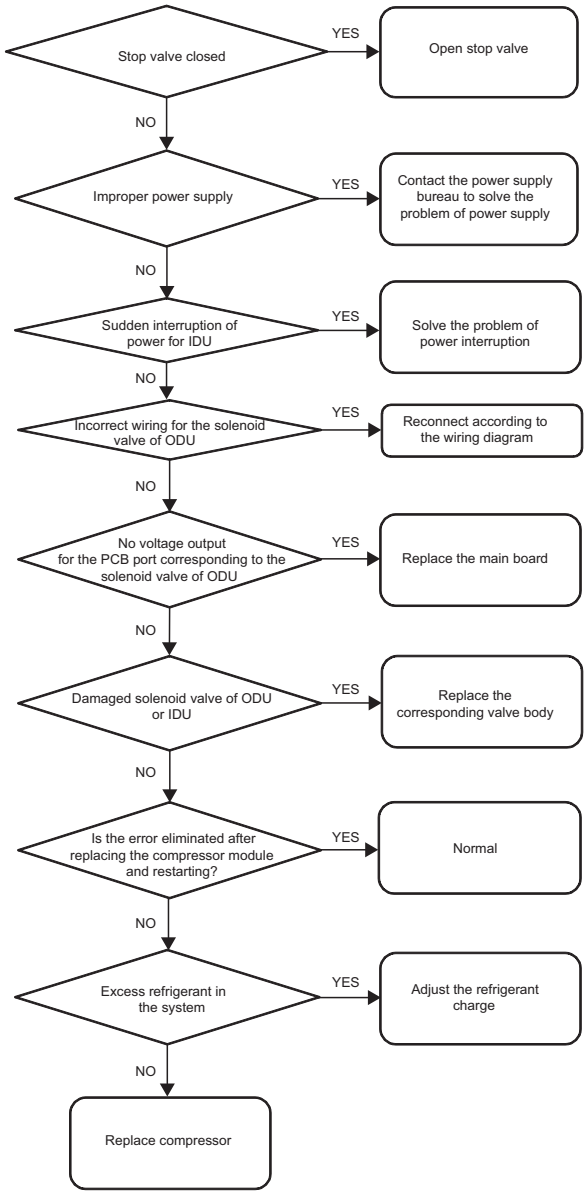

0P4 0H6: Discharge Temperature Protection

1. Error display:
   ODU display: 0P4/0H6
2. Applicable models:
   38VMA***HDS5-1 (208/230V-3Ph-60Hz)
   38VMA***HDS6-1 (460V-3Ph-60Hz)
3. Error definition:
   0P4 is reported when the maximum value registered for discharge temperature sensor on the main board is ≥ 239°F.
   0H6 is reported when 0P4 occur three times within a 100 minute period.
4. Possible causes:
   - High discharge temperature caused by lack of refrigerant in the system
   - Damaged sensor
   - Damaged main board
   - Lack of spray cooling function caused by a spray valve improper operation
   - Low pressure resulting from refrigerant blockage on the high pressure side due to solenoid valve error (IDU, ODU)

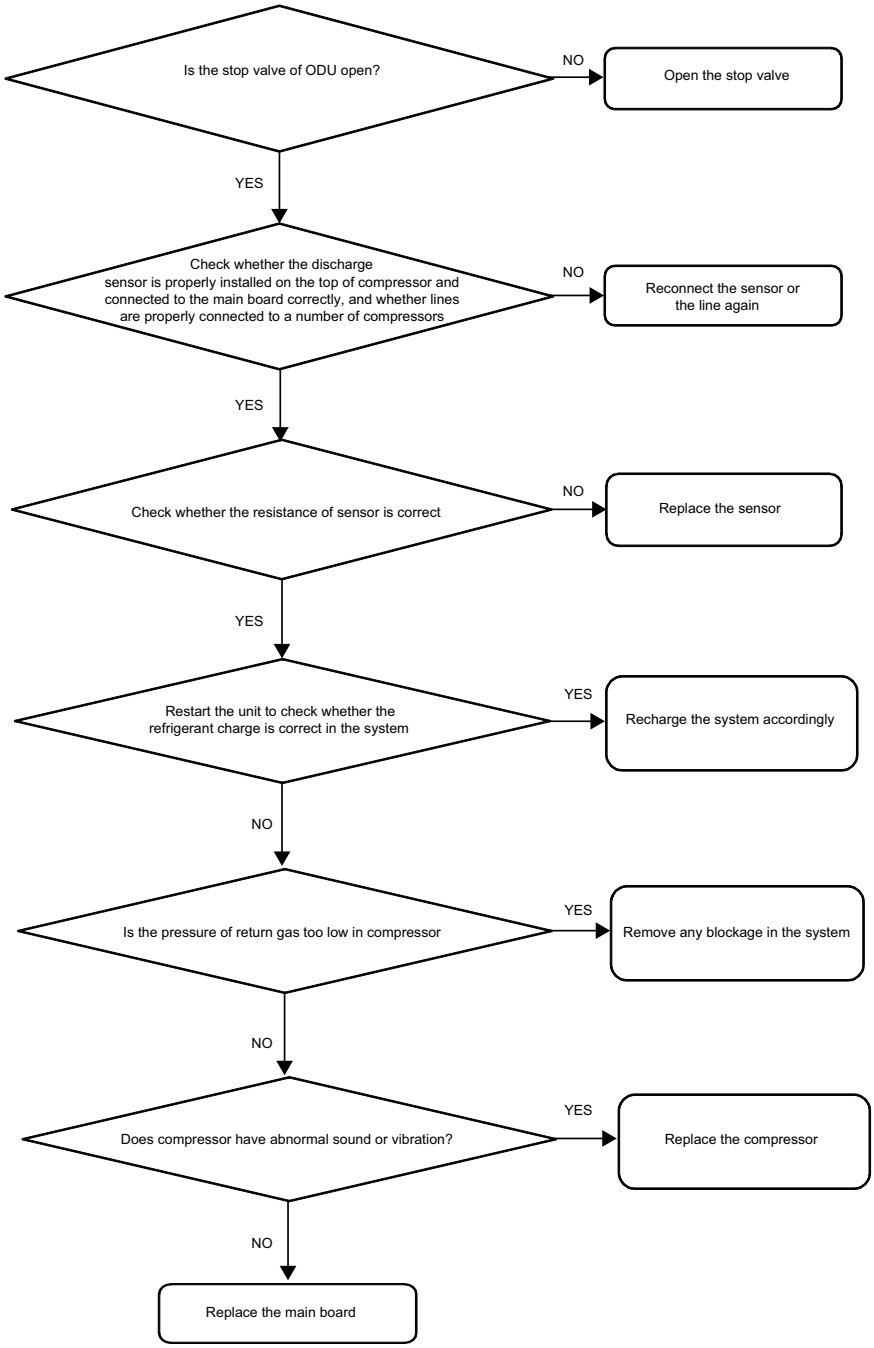

0P5: High Temperature Protection for Pipe Temperature

1. Error display:
   ODU display: 0P5
2. Applicable models:
   38VMA***HDS5-1 (208/230V-3Ph-60Hz)
   38VMA***HDS6-1 (460V-3Ph-60Hz)
3. Error definition:
   Error is reported when the maximum value registered by the tube temperature sensor (T3) on the main board is > 149°F, (normal value for T3 < 131°F).
4. Possible causes:
   - High temperature for the refrigerant in the system
   - Misjudgment caused by resistance drift of sensor
   - Damaged main board
   - Sensor affected by other nearby heat sources

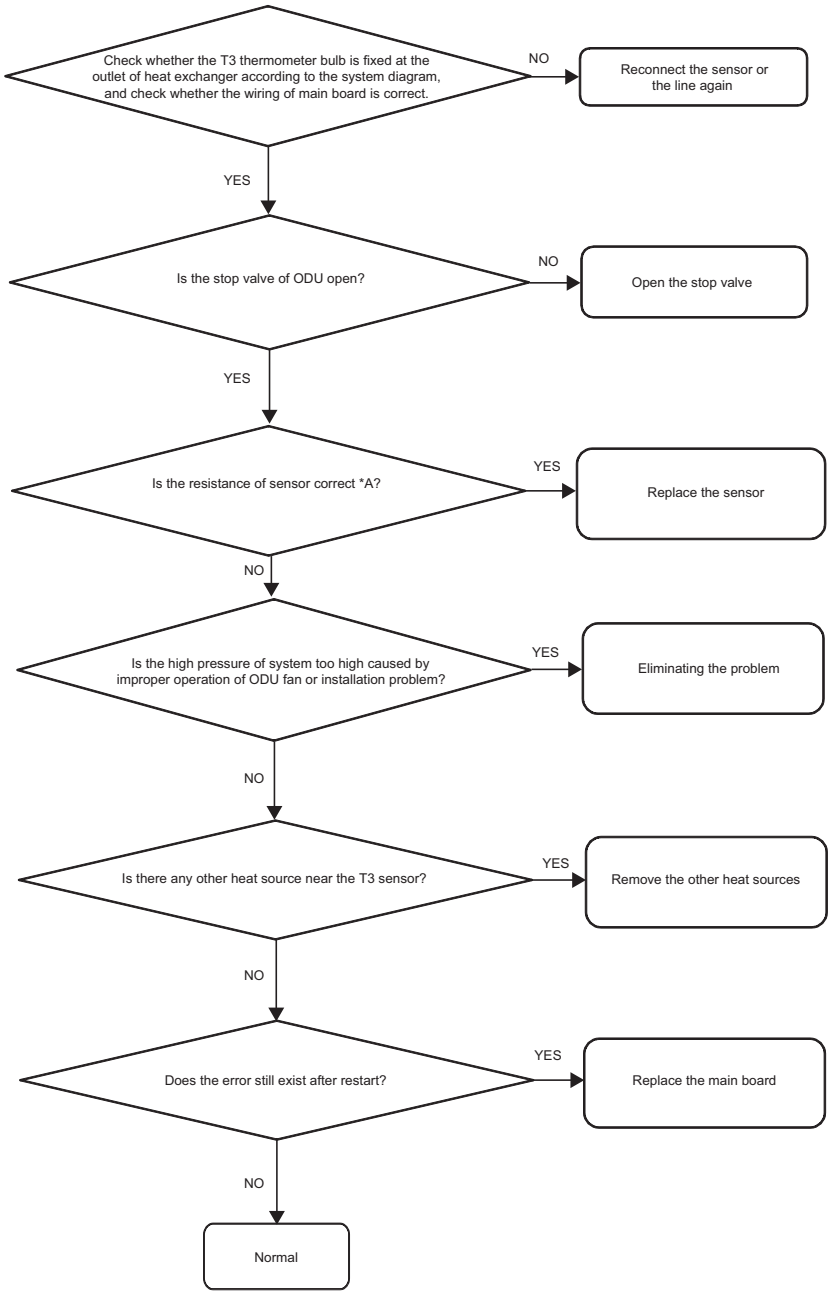

*A Refer to Resistant of Temperature sensor in Appendix.

0H9 0P9: DC Fan Protection

1. Error display:
   ODU display: 0H9 0P9
   Display on line controller: 0H9 0P9
2. Applicable models:
   38VMA***HDS5-1
   38VMA***HDS6-1
3. Error definition:
   Multiple errors related to ODU fan motor and fan motor driver.
   Check whether the following are normal:
   - Fan motor of ODU
   - Fan board
   - Power supply of fan board
   - Signals between fan board and main board
4. Possible causes:
   - Check wiring between the main board to the fan board, power lines from the power supply circuit to the fan board, wires from the fan motor to the fan board
   - Check DIP-IPM screws on the fan board
   - Damaged power circuit of fan board
   - Damaged fan board
   - Damaged fan motor
   - Damaged main board

Suitable for the Model 38VMA***HDS5-1

⚠ CAUTION

Turn off the power switch before connecting or disconnecting the connector. Failure to do so could damage the board.

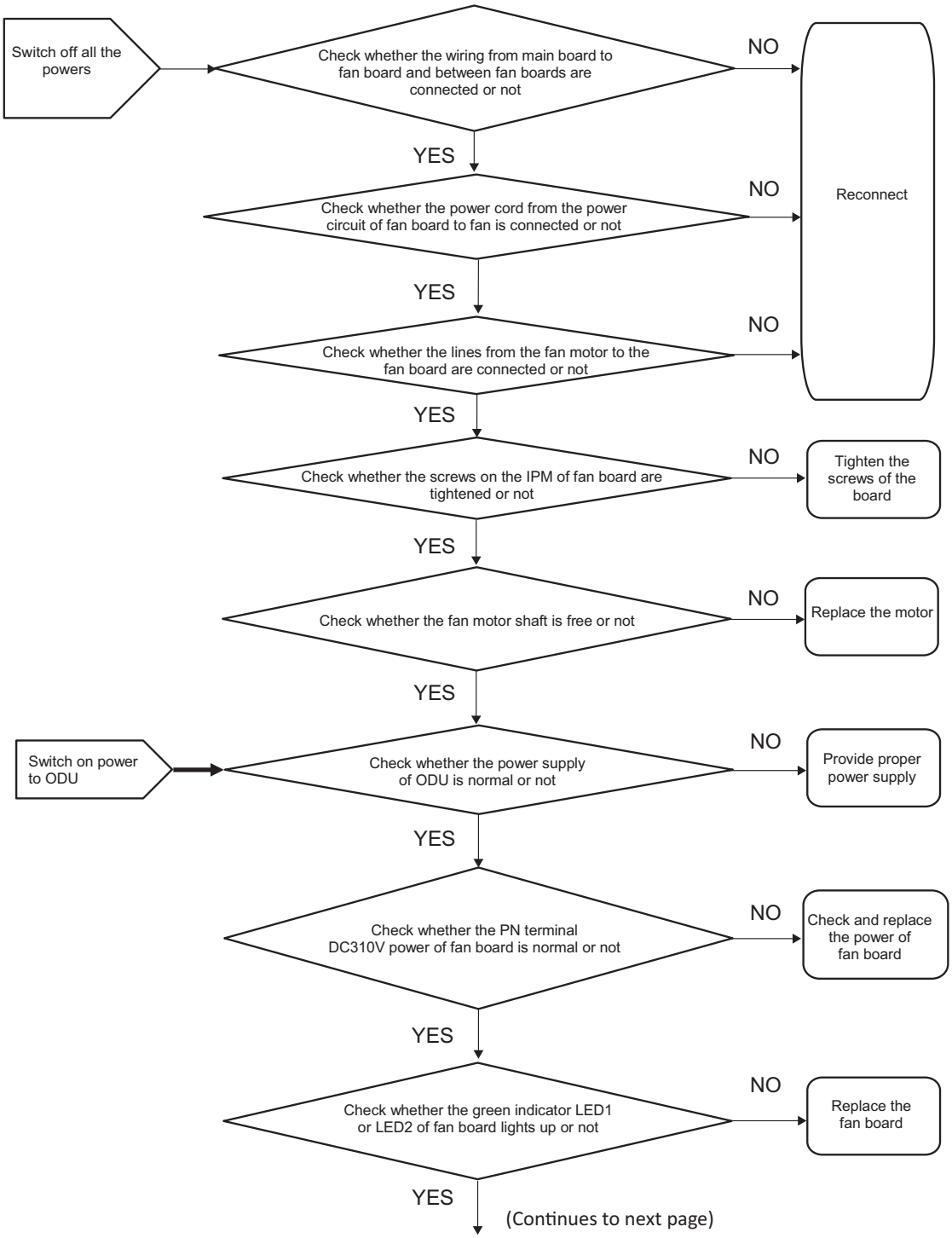

⚠ CAUTION

Turn off the power switch before connecting or disconnecting the connector. Failure to do so could damage the board.

Switch on the power to check whether the fan begins to run or not. Check whether the red indicator LED2 of fan board is lighted or not.

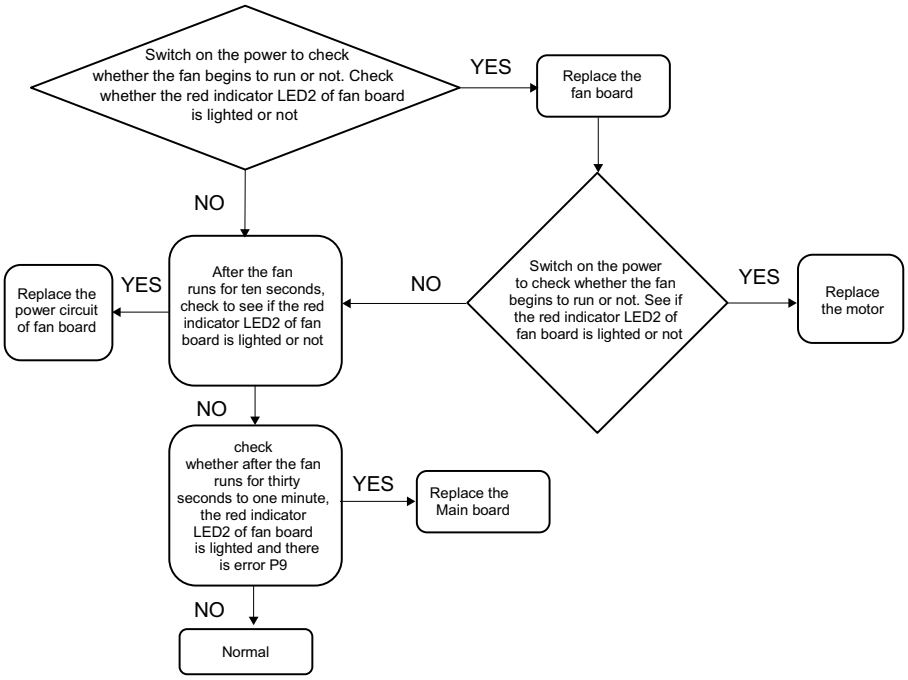

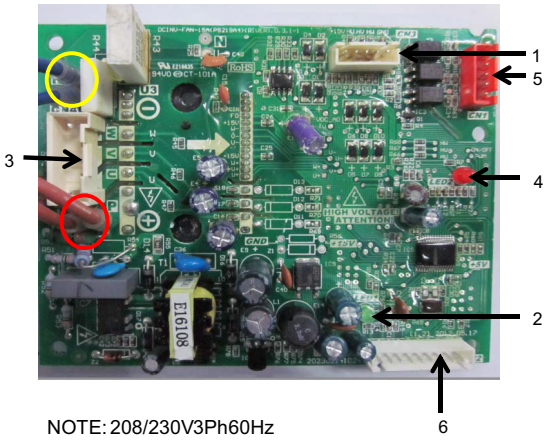

1. Motor signal feedback port
2. Power supply indicator lamp
3. Fan motor U, V, W output port
4. Error indicating lamp
5. PCB control signal input port
6. Program input port

* The normal value of output voltage between P and N terminal on fan module is DC 310V for 208-230V ODU.

NOTE: 208/230V3Ph60Hz

Suitable for the Model 38VMA***HDS6-1

⚠ CAUTION

Turn off the power switch before connecting or disconnecting the connector. Failure to do so could damage the board.

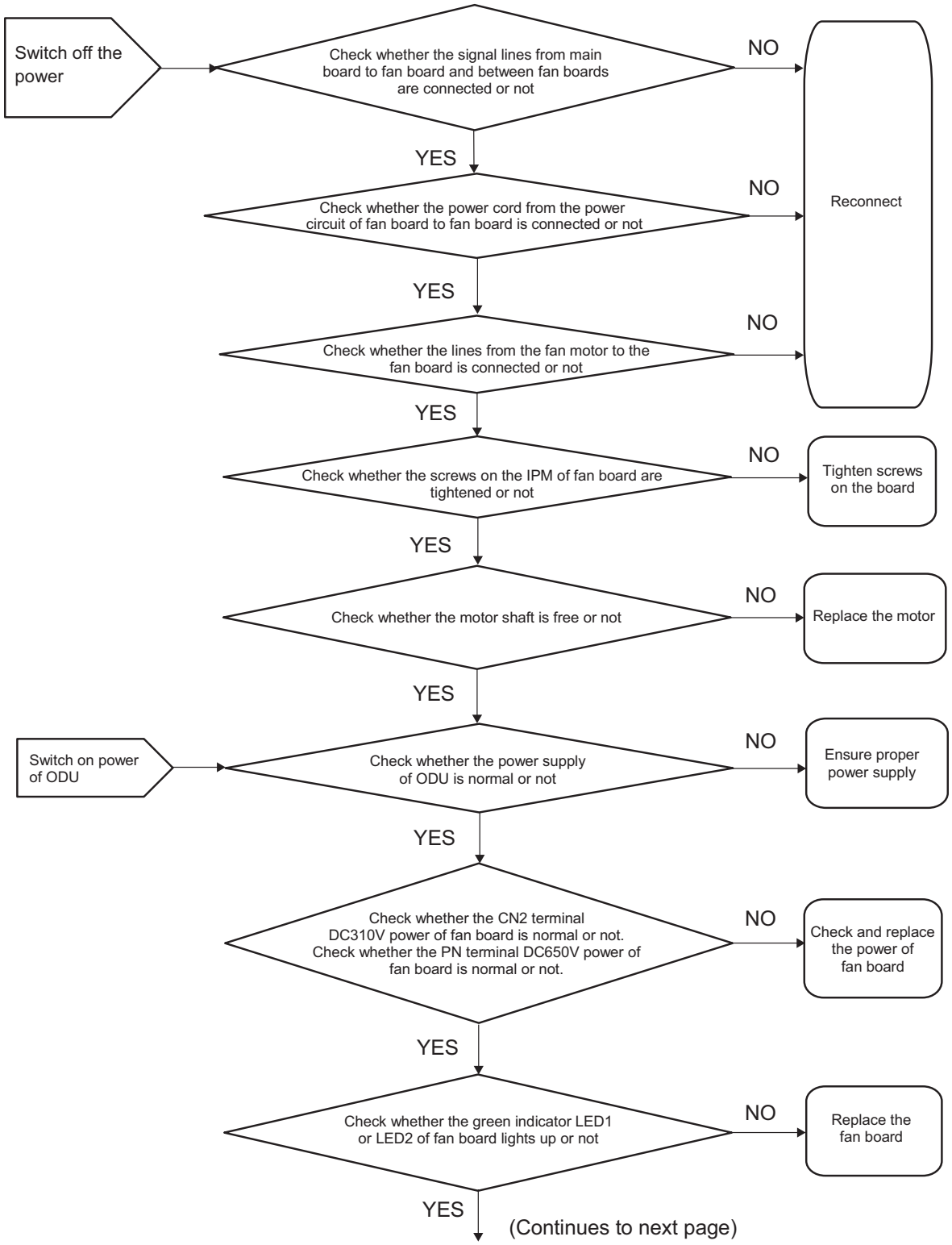

⚠ CAUTION

Turn off the power switch before connecting or disconnecting the connector. Failure to do so could damage the board.

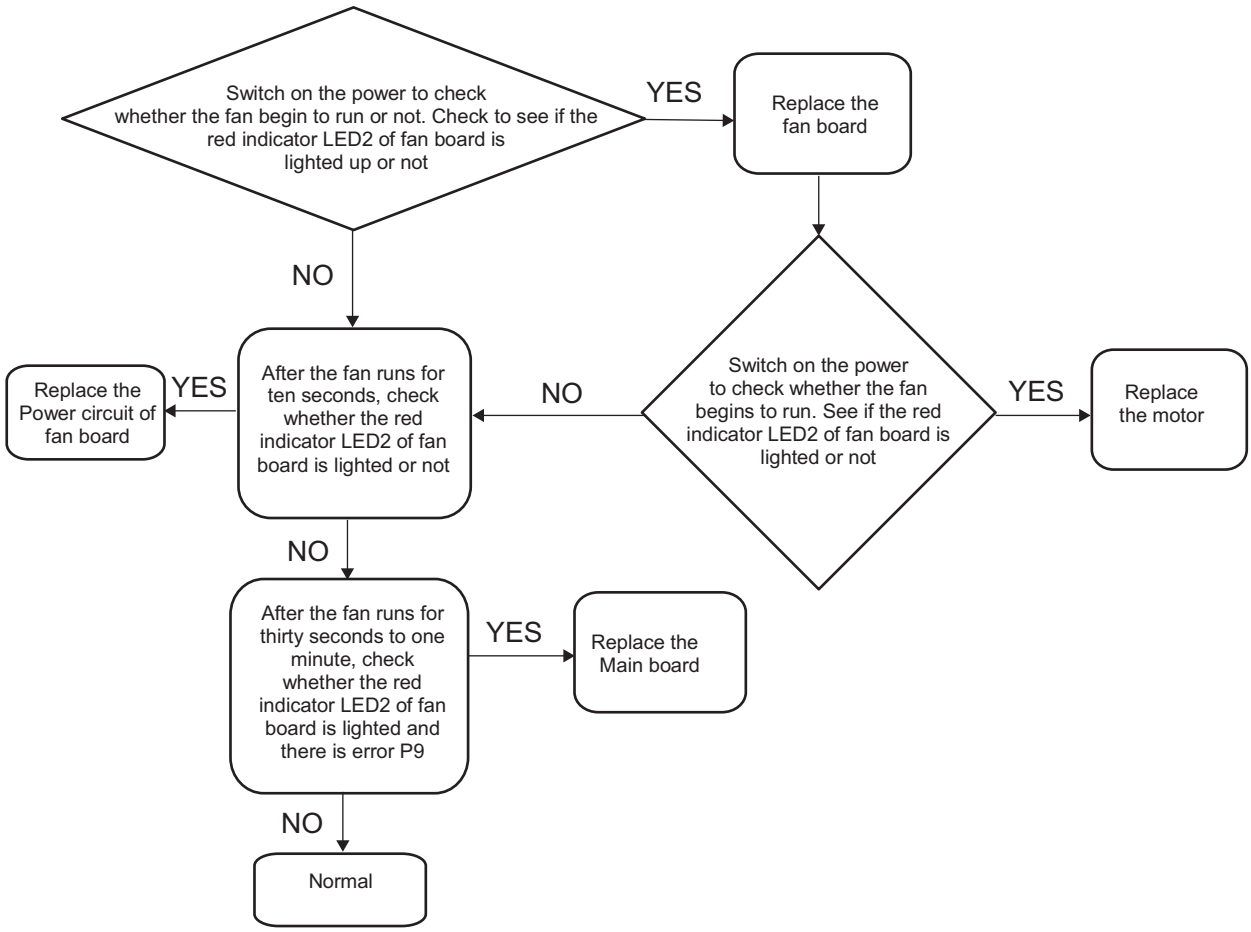

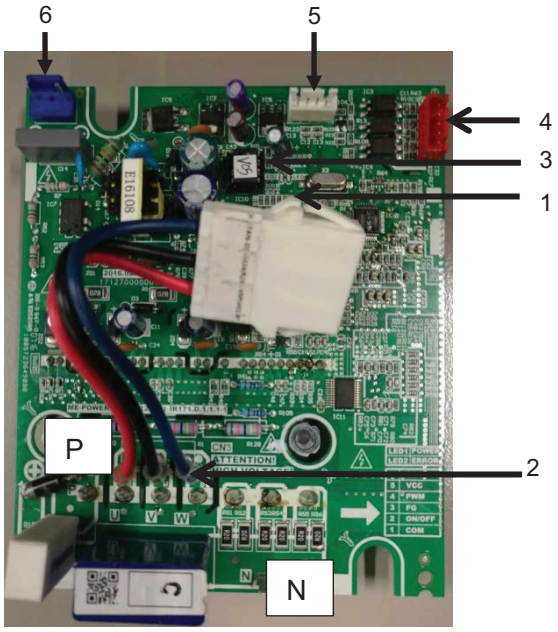

1. Power supply indicator lamp
2. Fan motor U, V, W output port
3. Error indicating lamp
4. PCB control signal input port
5. Program input port
6. Switching power DC power input

* The normal value of output voltage between P and N terminal on fan module is DC 650V for 460V ODU.

0C7 0PL: High Module Temperature Protection

1. Error display:
   ODU display: 0PL/0C7
2. Applicable models:
   38VMA***HDS5-1 (208/230V-3Ph-60Hz)
   38VMA***HDS6-1 (460V-3Ph-60Hz)
3. Error definition:
   Error is reported when the temperature of the module is registered on the main board Tf > 172.4°F, and 0C7 is reported when 0PL occur three times within 100 minutes.
4. Possible causes:
   - Clogged fin of radiator resulting in poor heat transfer
   - Left/right fan connected in reverse order during maintenance
   - Damaged ambient temperature sensor for the module
   - Damaged main board

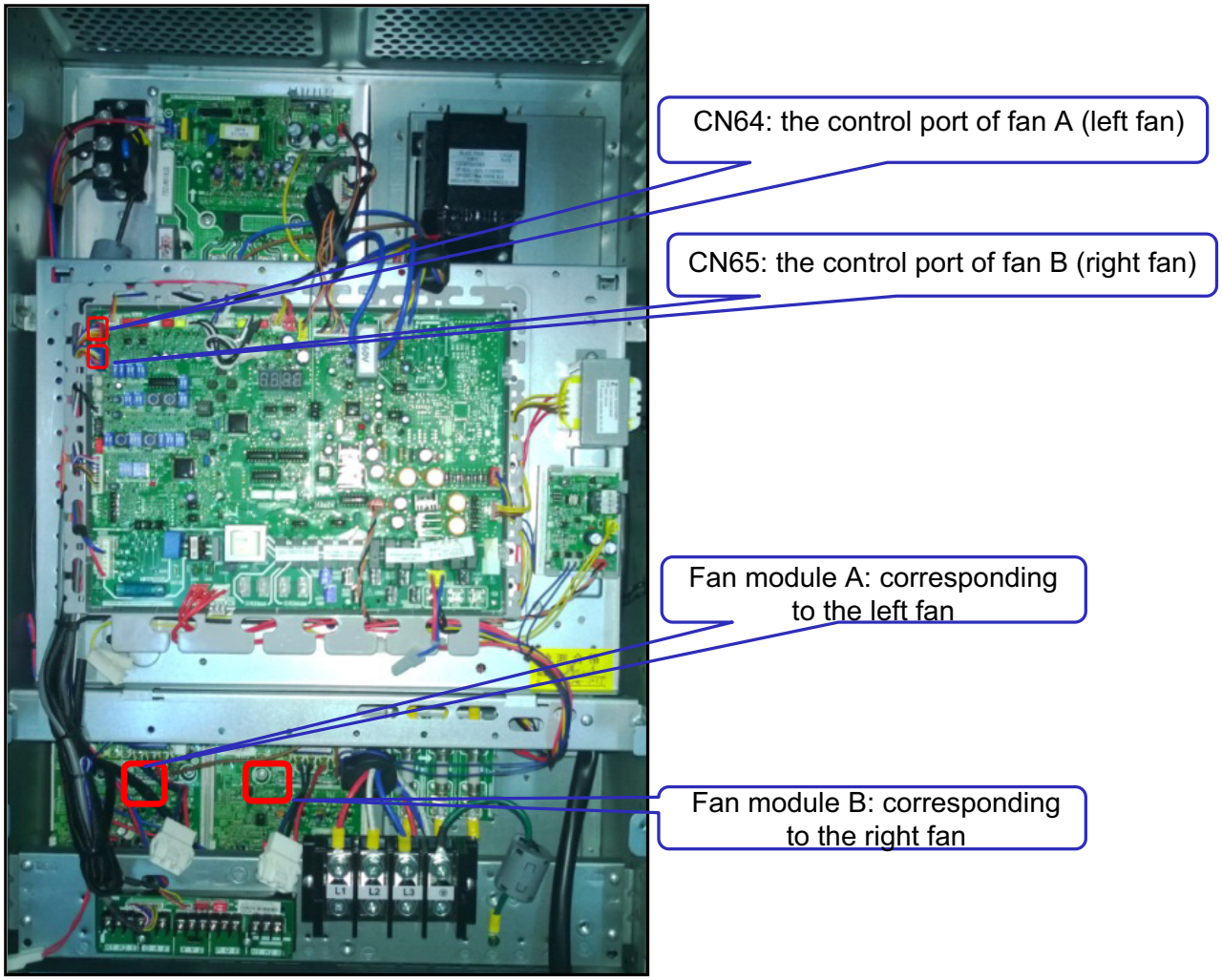

⚠ CAUTION

Turn off the power switch before connecting or disconnecting the connector. Failure to do so could damage the board.

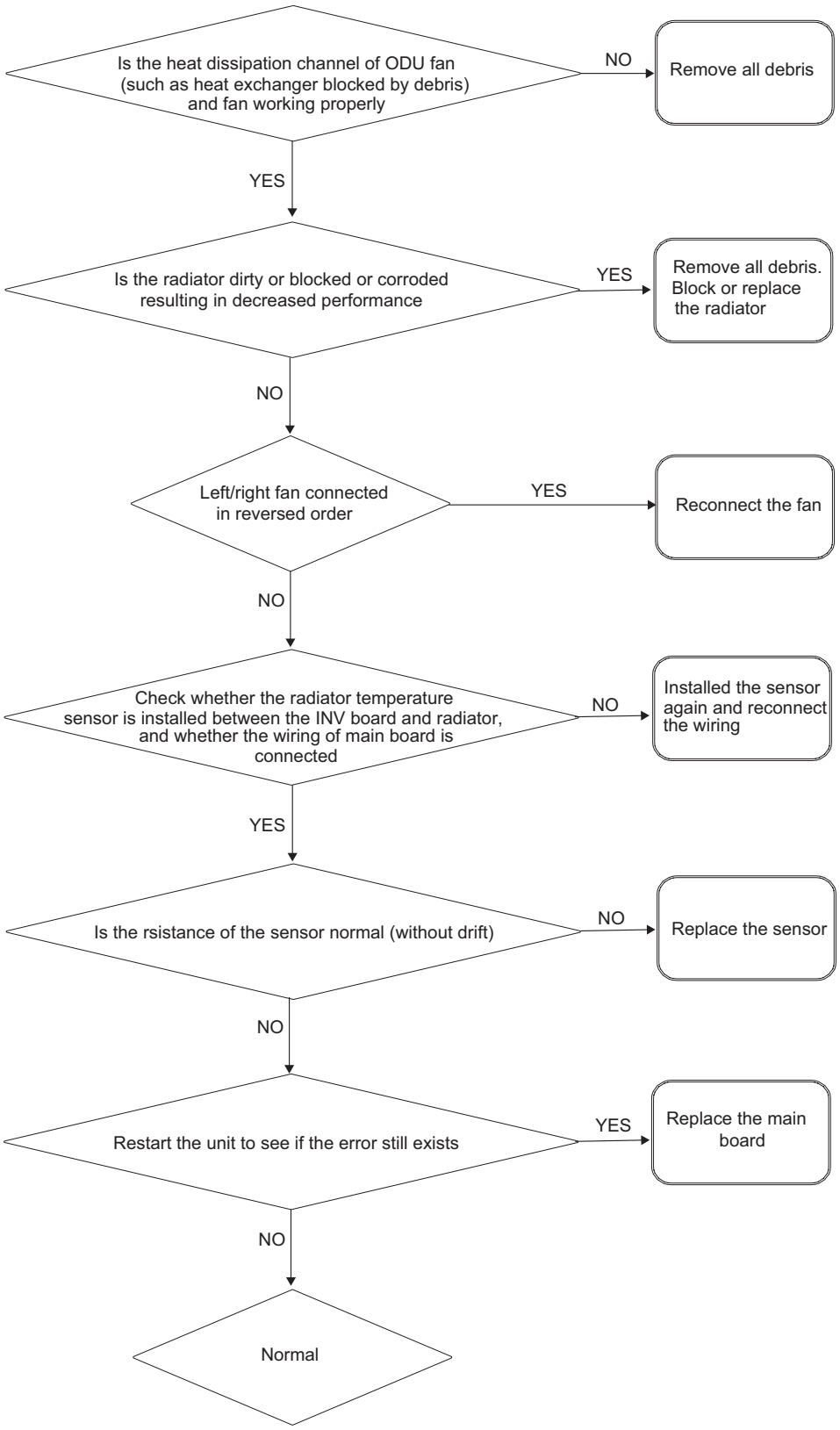

L0~L9 10H4 / 20H4: Compressor INV Module Protection

ERROR DISPLAY:

For the L0~L9 error, the digital display on the main board is identical to that in standby status. Check to see each error code. See the following table for more information.

If L0~L9 protection occurs 3 times within 60 minutes, 10H4 or 20H4 will be reported on the digital display of the main board.

COMPRESSOR A MODULE PROTECTION		COMPRESSOR B MODULE PROTECTION	
Red LED always lights on	Green LED flashes quickly	Red LED always lights on	Green LED flashes quickly
LED5	LED4	LED7	LED6

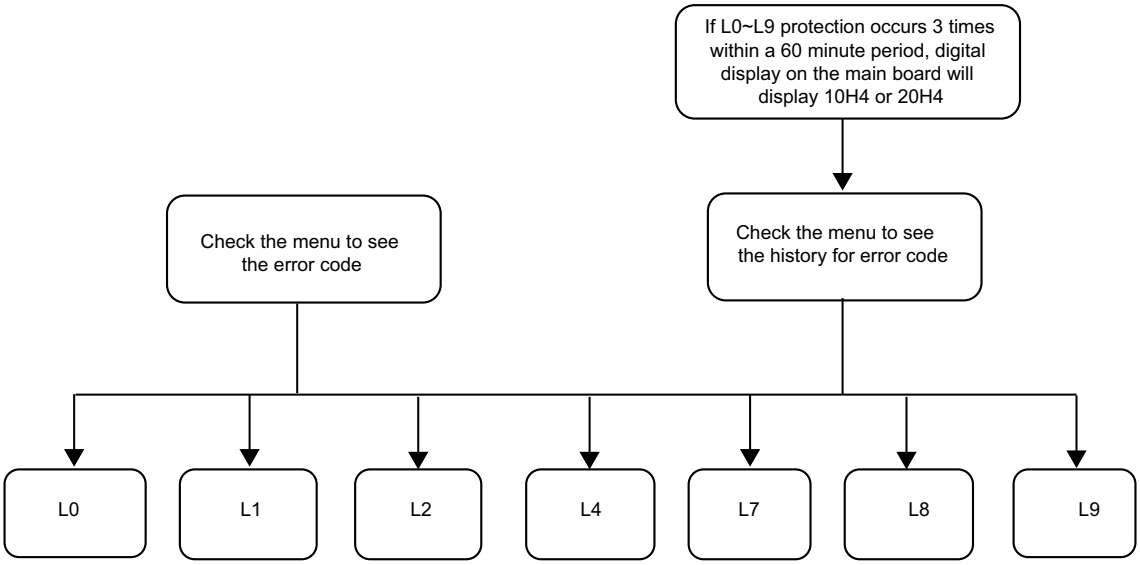

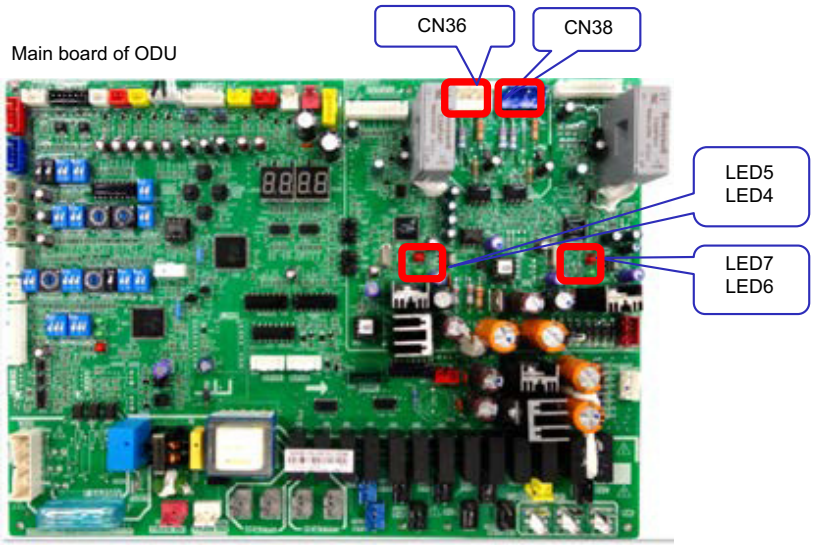

APPLICABLE MODELS:

38VMA***HDS5-1 (208/230V-3Ph-60Hz)

38VMA***HDS6-1 (460V-3Ph-60Hz)

ERROR DEFINITION:

ERROR	DETAILED DEFINITION	GREEN LED (NUMBER OF FLASHES)	RED LED
Compressor module protection	L0: Error in compressor module	8	Light on for long time
	L1: DC bus under-voltage protection	9	
	L2: DC bus over-voltage protection	10	
	L4: MCE error / synchronization / closed loop	12	
	L7: Phase lacking protection for 3-phase lines U, V, W in compressor	15	
	L8: Protection for transient variation >15Hz between the former moment (2S) and the next moment	16	
	L9: Protection for setting speed difference between transient variation and actual operation > 15Hz	17	

POSSIBLE CAUSES:

- Improper heat transfer by ODU system
- Improper heat transfer by IPM, and IPM thermal protection
- Improper input voltage for power supply
- Improper connection for 3-phase U, V, W lines to compressor
- Damaged compressor module
- Damaged compressor
- Improper refrigerant charge in the system

Drive module of compressor

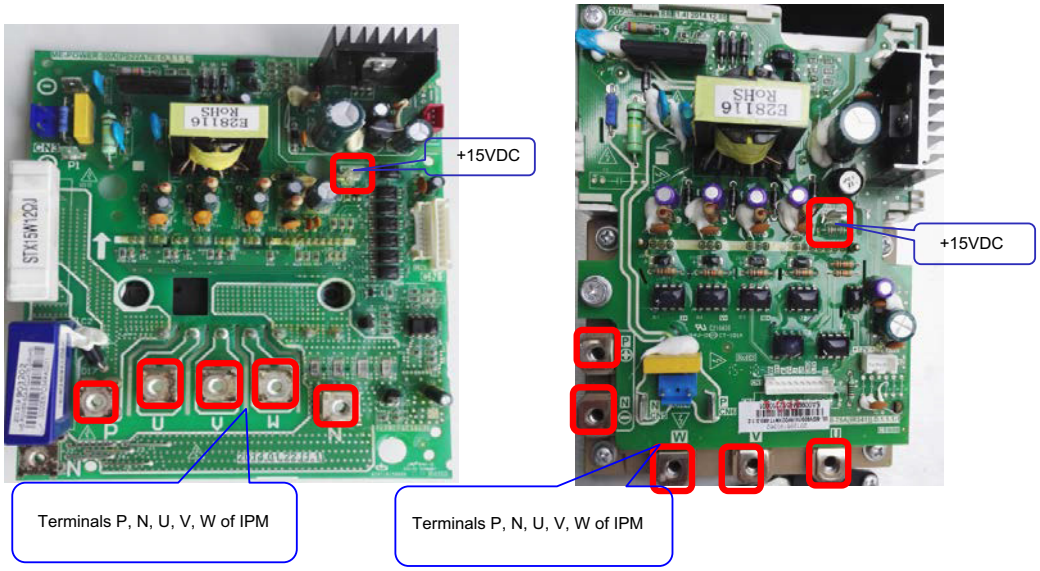

⚠ CAUTION

Turn off the power switch before connecting or disconnecting the connector. Failure to do so could damage the board.

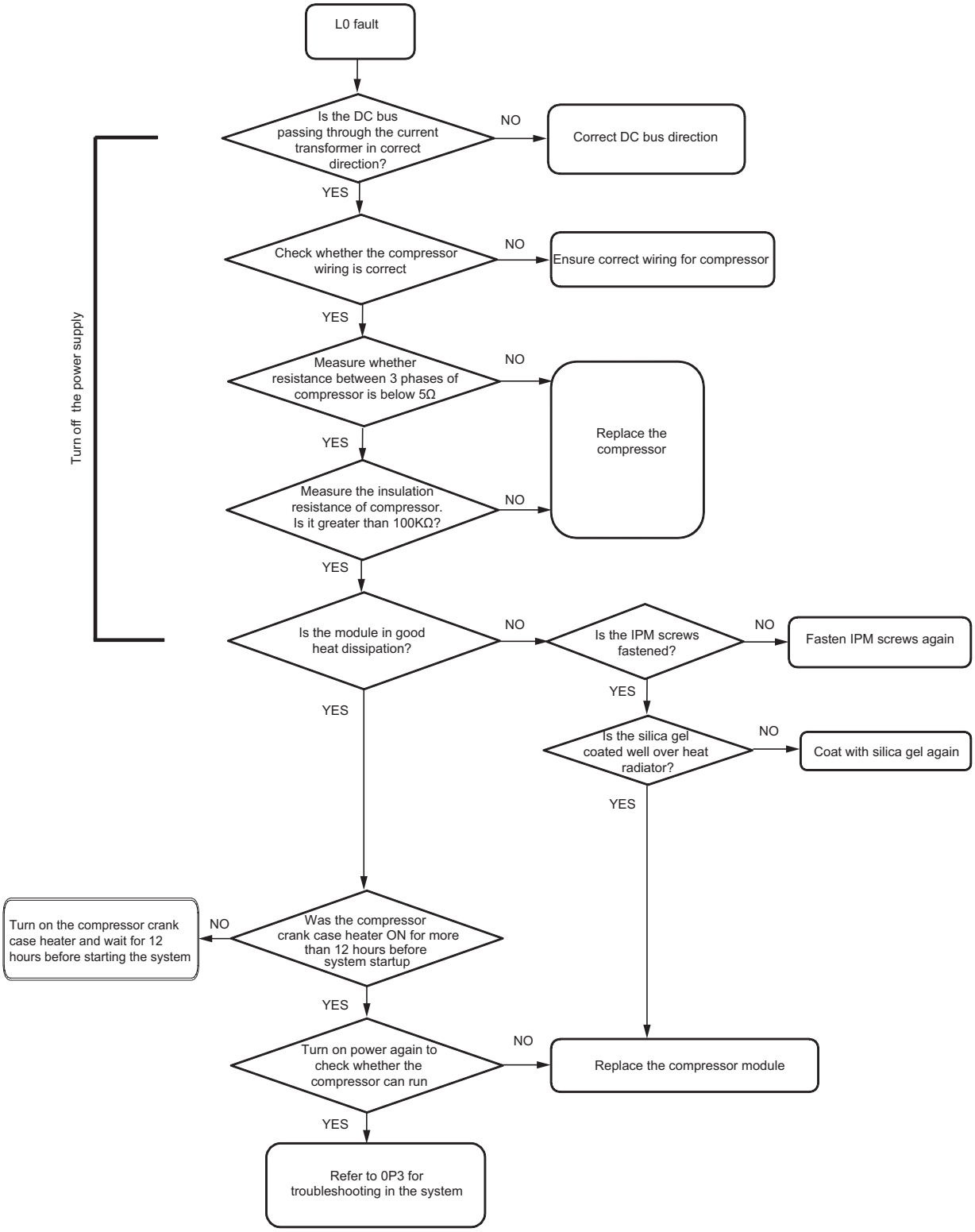

⚠ CAUTION

Turn off the power switch before connecting or disconnecting the connector. Failure to do so could damage the board.

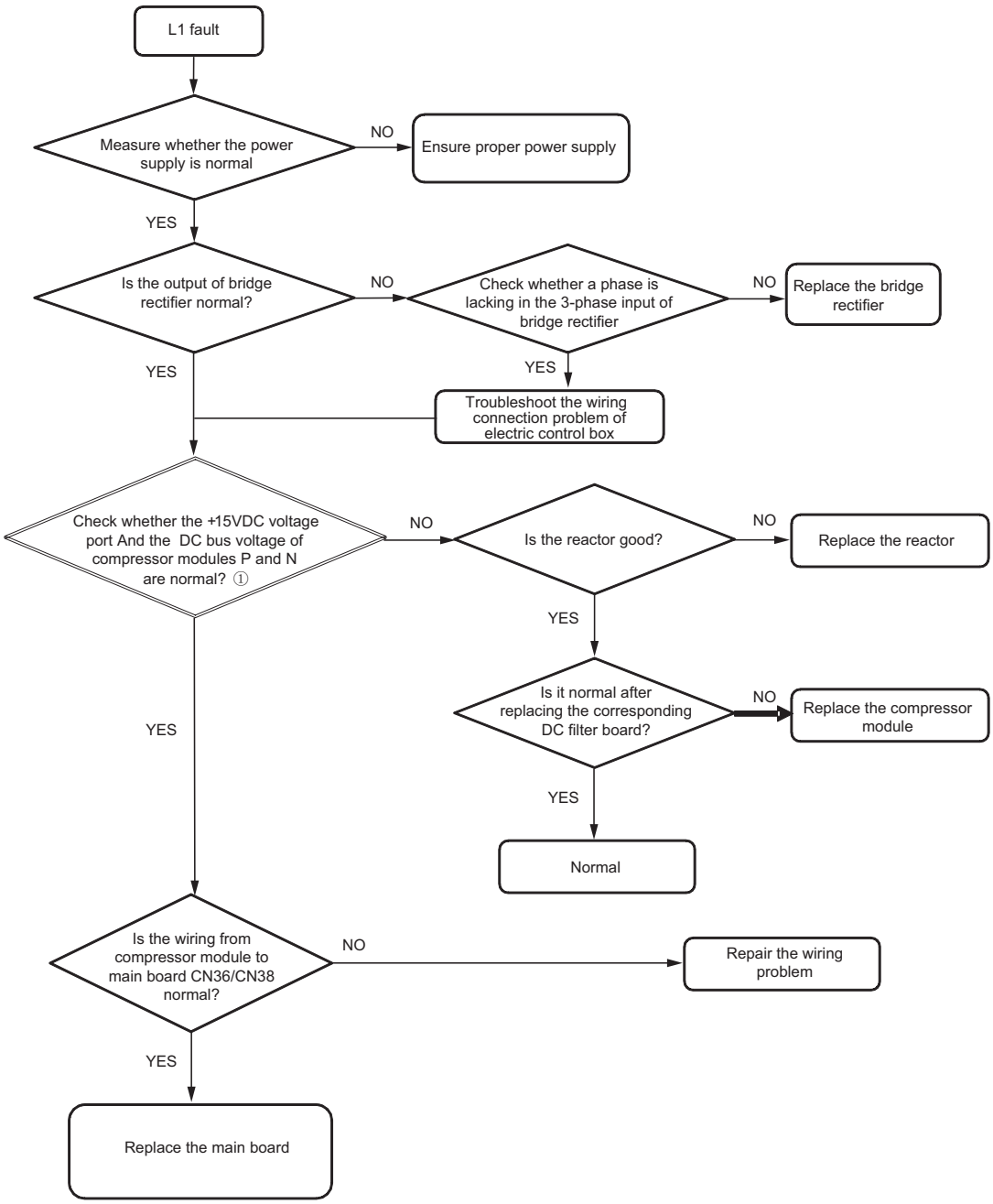

NOTES:

1. Model 38VMA***HDS5-1 (208/230V-3Ph-60Hz):
   L1 Error will be reported when it is lower than 150VDC, the under-voltage setting value for DC bus.
2. Model 38VMA***HDS6-1 (460V-3Ph-60Hz):
   L1 Error will be reported when it is lower than 400VDC, the under-voltage setting value for DC bus.

⚠CAUTION

Turn off the power switch before connecting or disconnecting the connector. Failure to do so could damage the board.

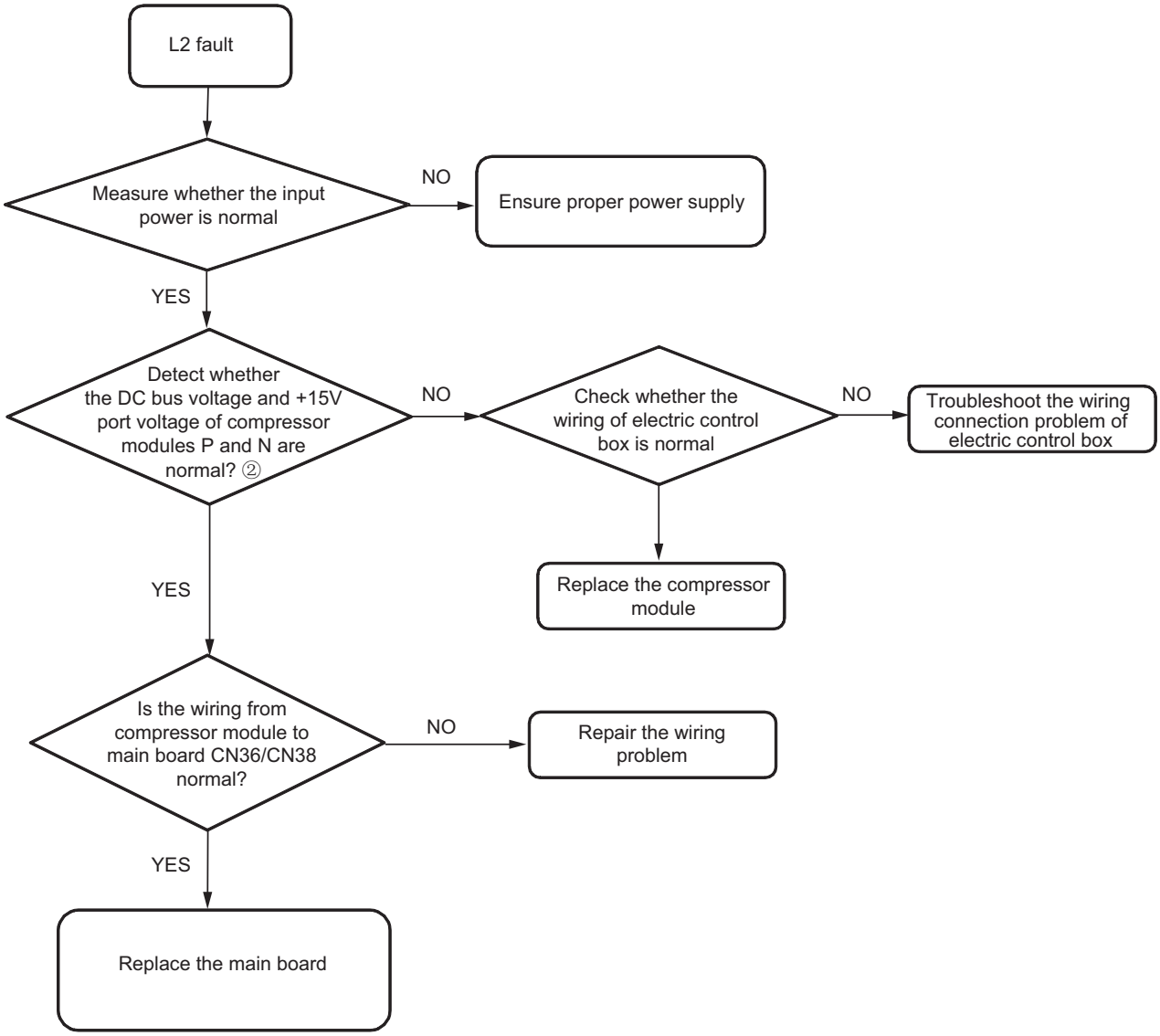

NOTES:

1. Model 38VMA***HDS5-1 (208/230V-3Ph-60Hz):
   L2 Error will be reported when it is higher than 500VDC, the over-voltage setting value for DC bus.
2. Model 38VMA***HDS6-1 (460V-3Ph-60Hz):
   L2 Error will be reported when it is higher than 800VDC, the over-voltage setting value for DC bus.

⚠ CAUTION

Turn off the power switch before connecting or disconnecting the connector. Failure to do so could damage the board.

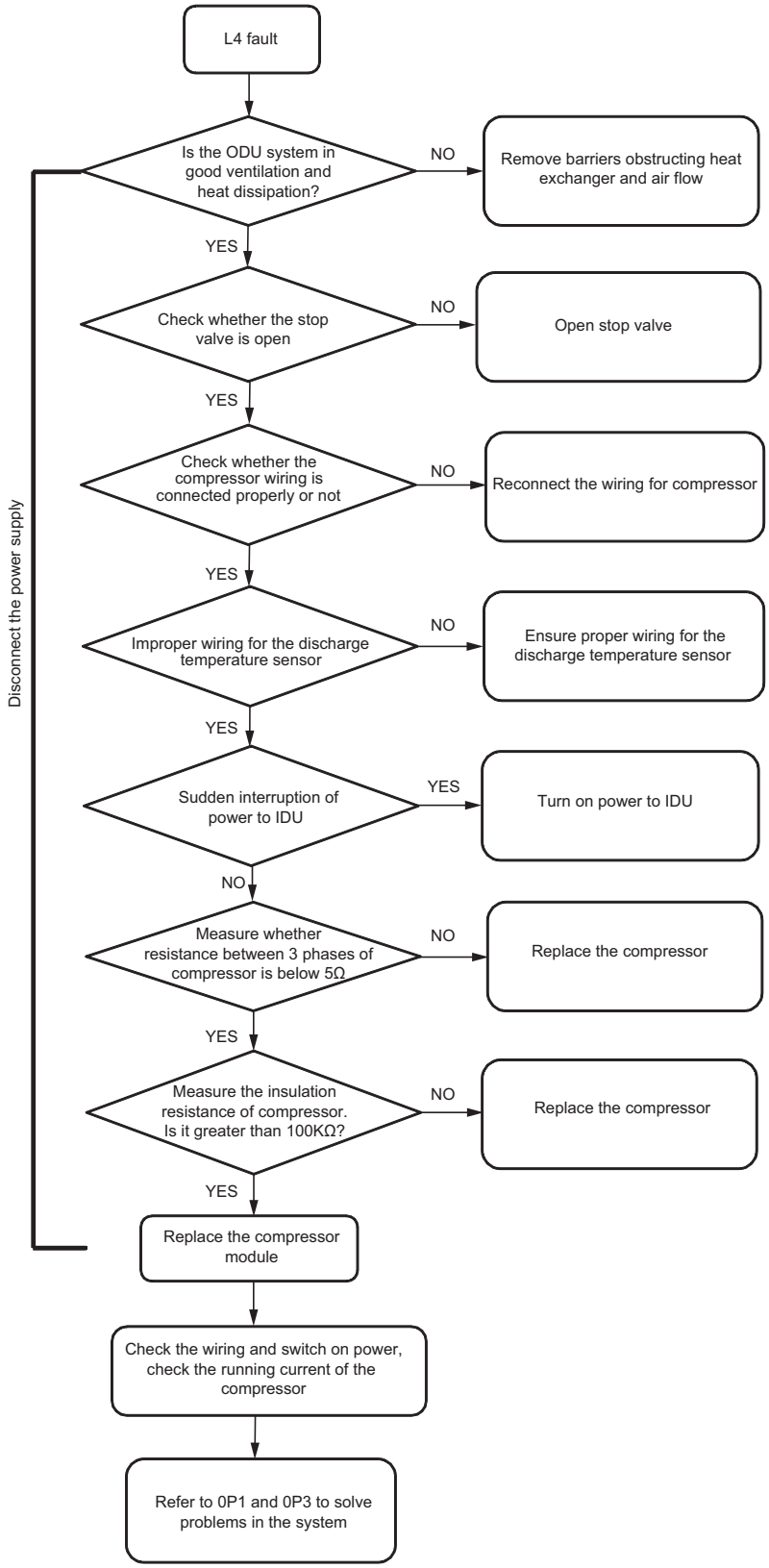

⚠ CAUTION

Turn off the power switch before connecting or disconnecting the connector. Failure to do so could damage the board.

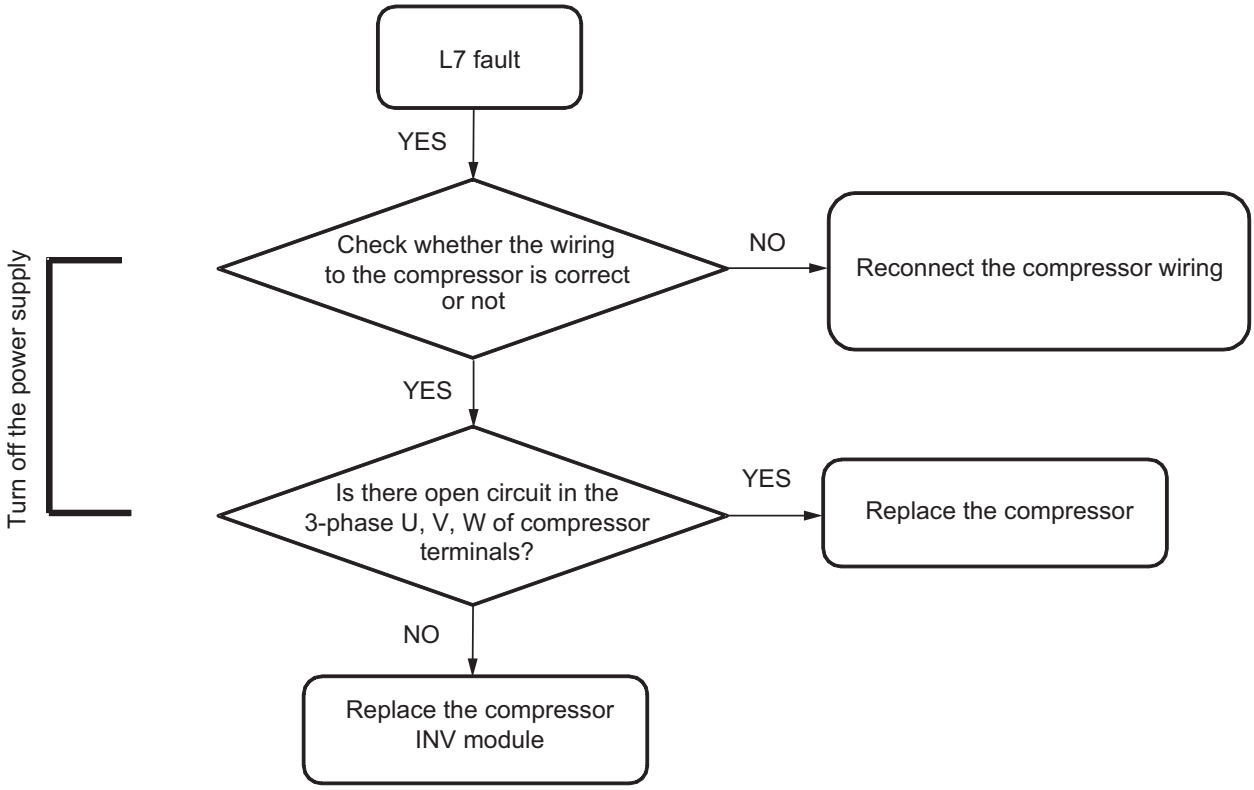

⚠ CAUTION

Turn off the power switch before connecting or disconnecting the connector. Failure to do so could damage the board.

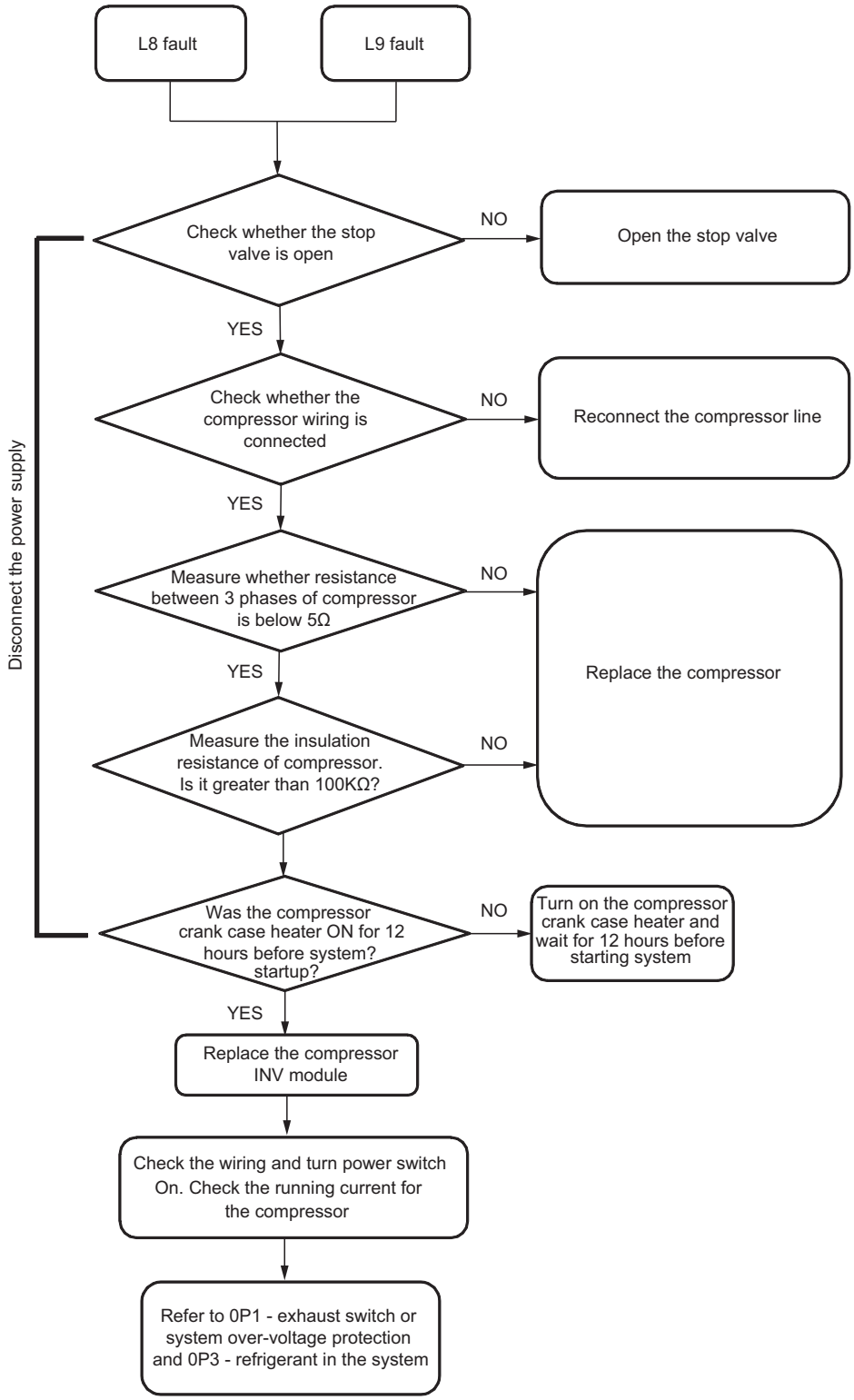

AtL: Ambient Temperature Limit Operation

1. Error display:
   ODU display: AtL ODU display only
2. Applicable models:
   38VMA***HDS5-1 (208/230V-3Ph-60Hz)
   38VMA***HDS6-1 (460V-3Ph-60Hz)
3. Error definition:
   ODU operating outside the allowable limits (allowable limits: cooling 5~125FDB, heating -4~64FWB)
4. Possible causes:
   - The ODU ambient temperature exceeds the allowable operational limit
   - Improper connection at the sensor terminal
   - Damaged ambient temperature sensor
   - Damaged main board

⚠ CAUTION

Turn off the power switch before connecting or disconnecting the connector. Failure to do so could damage the board.

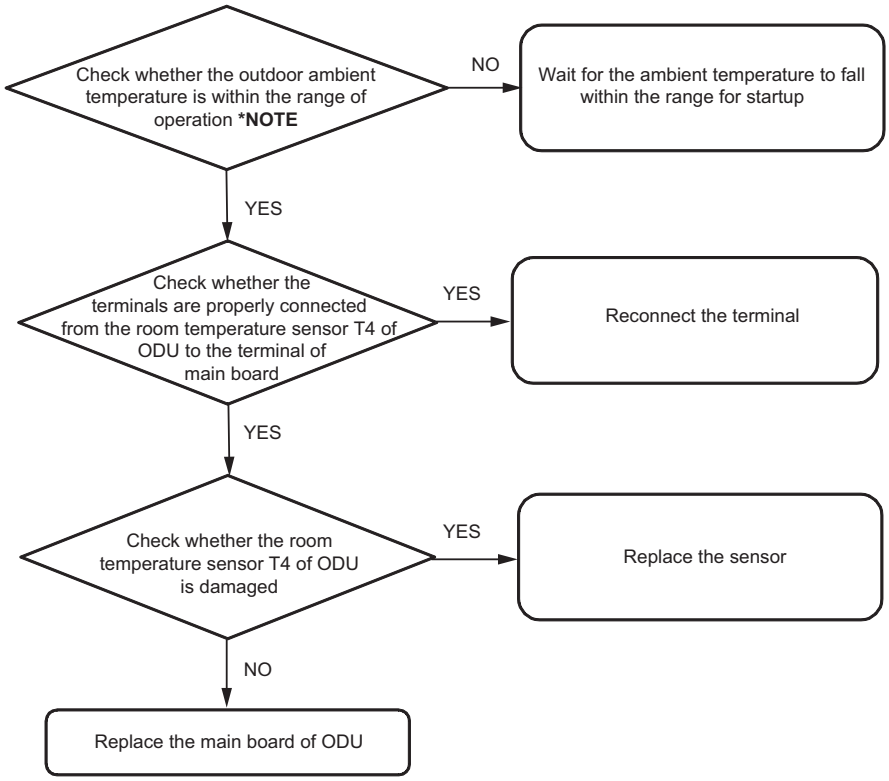

NOTE
Before starting the compressor, make it in the range of cooling T4 < 5°F and heating T4 ≥ 77°F with a difference of 3.6°F.
In order to protect its reliability, the upper limit of cooling temperature should be 131°F (shut down when T4 ≥ 131°F) and the recovery temperature is 125.6°F, the lower limit of heating temperature is -22°F, and the recovery temperature is -13°F.

APPENDIX

WIRING DIAGRAMS

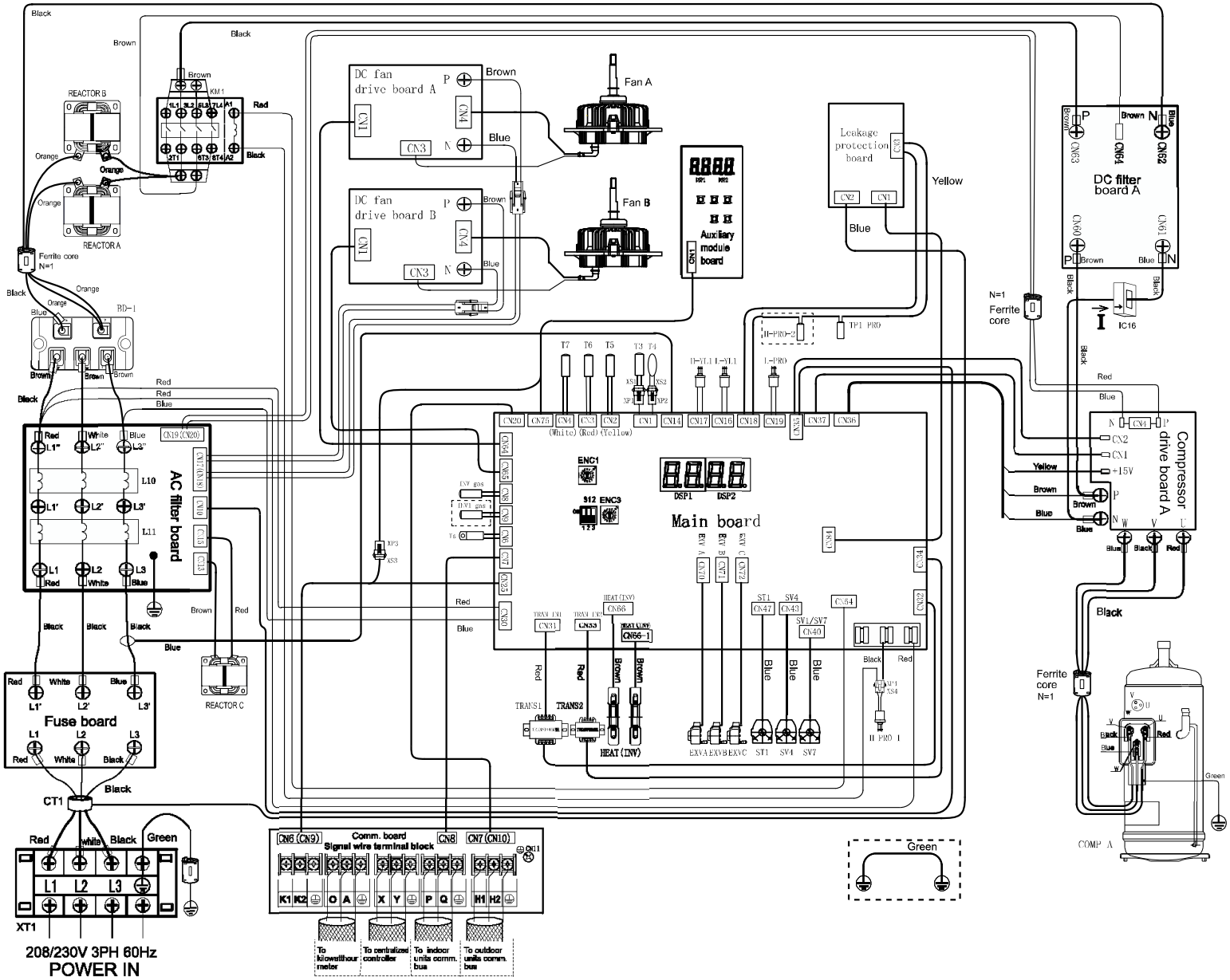

CODE	NAME
COMP A	Inverter compressor
Fan A/Fan B	DC fan
ST1	4-way valve
XT1	Terminal block
L-PRO	**Low pressure ON/OFF switch**
H-PRO-1 **H-PRO-2**	**High pressure ON/OFF switch**
TP1-PRO	**Discharge temperature ON/OFF switch**
EXV A/EXV B **EXV C**	**Electronic expansion valve**
XS1-XS4	Plug
XP1-XP4	Jack
T3/T5/T6/T7	Condenser temperature sensor
T4	Outdoor ambient temperature sensor
Ts	Heat sink temperature sensor
INV gas INV1 gas	Discharge temperature sensor
L-YL1	Low pressure sensor
H-YL1	High pressure sensor
Reactor A Reactor B Reactor C	Inductor
CT1/CT2/IC16	Current sensor
TRANS1/TRANS2	Power transformer
BD-1	3-phase bridge rectifier
SV4/SV7	Solenoid valve
HEAT(INV/INV1)	Crankcase heater
KM1	Contactor

The **wiring picture** shown is **for reference** only, actual **product** may vary.

Fig. 36 —38VMA072, 096, 120HDS5-1

Wiring Diagrams (Cont.)

CODE	NAME
COMP A COMP B	Inverter compressor
Fan A/Fan B	DC fan
ST1	4-way valve
Contactor A Contactor B	Contactor
XT1-XT5	Terminal block
L-PRO	Low pressure ON/OFF switch
H-PRO-1 H-PRO-2	High pressure ON/OFF switch
TP1-PRO TP2-PRO	Discharge temperature ON/OFF switch
EXV A/EXV B EXV C	Electronic expansion valve
XS1-XS6	Plug
XP1-XP6	Jack
T3/T5/T6/T7	Condenser temperature sensor
T4	Outdoor ambient temperature sensor
Ts	Heat sink temperature sensor
INV gas INV1 gas	Discharge temperature sensor
L-YL1	Low pressure sensor
H-YL1	High pressure sensor
Reactor A Reactor B	Inductor
CT1-CT3 IC16-IC17	Current sensor
TRANS1/TRANS2	Power transformer
BD-1/BD-2	3-phase bridge rectifier
SV4/SV7	Solenoid valve
HEAT(INV/INV1)	Crankcase heater

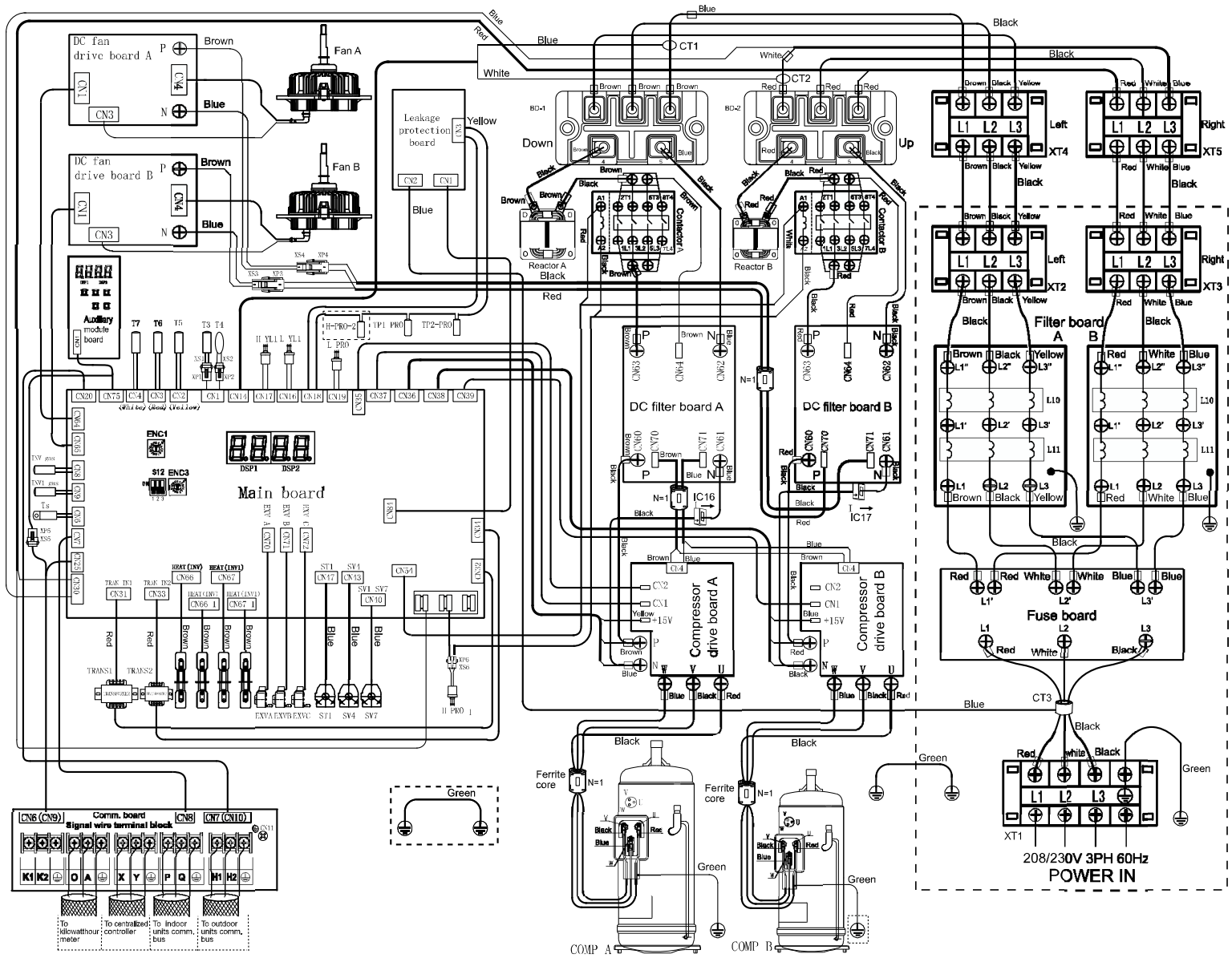

The wiring picture shown is for reference only, actual product may vary.

Fig. 37 —38VMA144HDS5-1

Wiring Diagrams (Cont.)

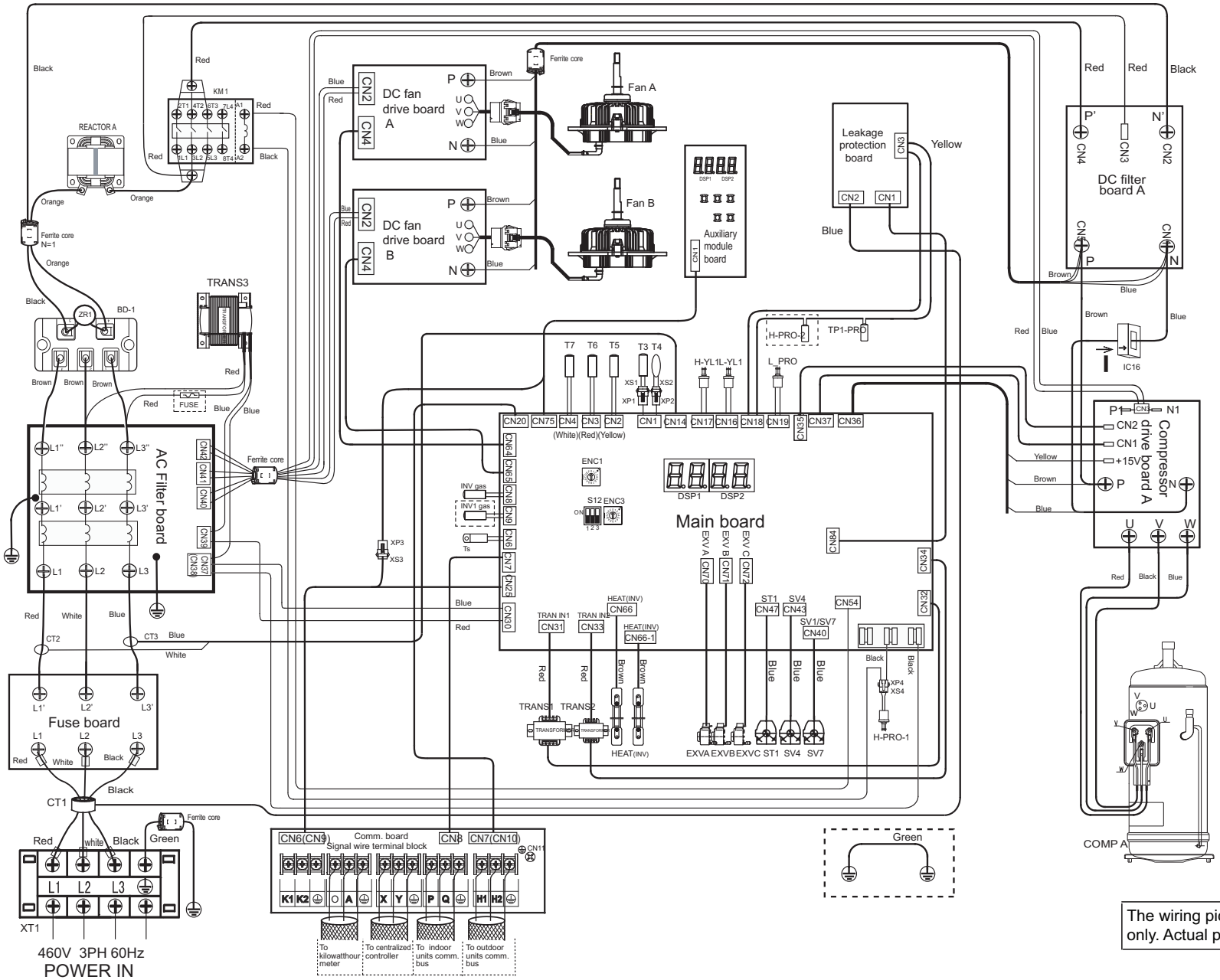

CODE	NAME
COMP A	Inverter compressor
Fan A/Fan B	DC fan
ST1	4-way valve
XT1	Terminal block
L-PRO	Low pressure ON/OFF switch
H-PRO-1 H-PRO-2	High pressure ON/OFF switch
TP1-PRO	Discharge temperature ON/OFF switch
EXV A/EXV B EXV C	Electronic expansion valve
XS1-XS4	Plug
XP1-XP4	Jack
T3/T5/T6/T7	Condenser temperature sensor
T4	Outdoor ambient temperature sensor
Ts	Heat sink temperature sensor
INV gas INV1 gas	Discharge temperature sensor
L-YL1	Low pressure sensor
H-YL1	High pressure sensor
Reactor A	Inductor
CT1-CT3/IC16	Current sensor
TRANS1-TRANS3	Power transformer
BD-1	3-phase bridge rectifier
SV4/SV7	Solenoid valve
HEAT(INV/INV1)	Crankcase heater
KM1	Contactor
ZR1	Varistor

The wiring picture shown is for reference only. Actual product may vary.

Fig. 38 —Wiring Diagram (38VMA072HDS6-1, 38VMA096HDS6-1, 38VMA120HDS6-1)

Wiring Diagrams (Cont.)

CODE	NAME
COMP A COMP B	Inverter compressor
Fan A/Fan B	DC fan
ST1	4-way valve
Contactor A Contactor B	Contactor
XT1-XT5	Terminal block
L-PRO	Low pressure ON/OFF switch
H-PRO-1 H-PRO-2	High pressure ON/OFF switch
TP1-PRO TP2-PRO	Discharge temperature ON/OFF switch
EXV A/EXV B EXV C	Electronic expansion valve
XS1-XS6	Plug
XP1-XP6	Jack
T3/T5/T6/T7	Condenser temperature sensor
T4	Outdoor ambient temperature sensor
Ts	Heat sink temperature sensor
INV gas INV1 gas	Discharge temperature sensor
L-YL1	Low pressure sensor
H-YL1	High pressure sensor
Reactor A Reactor B	Inductor
CT1-CT3 IC16-17	Current sensor
TRANS1-TRANS3	Power transformer
BD-1/BD-2	3-phase bridge rectifier
ZR1,ZR2	Voltage Dependent Resistor
SV4/SV7	Solenoid valve
HEAT(INV,INV1)	Crankcase heater

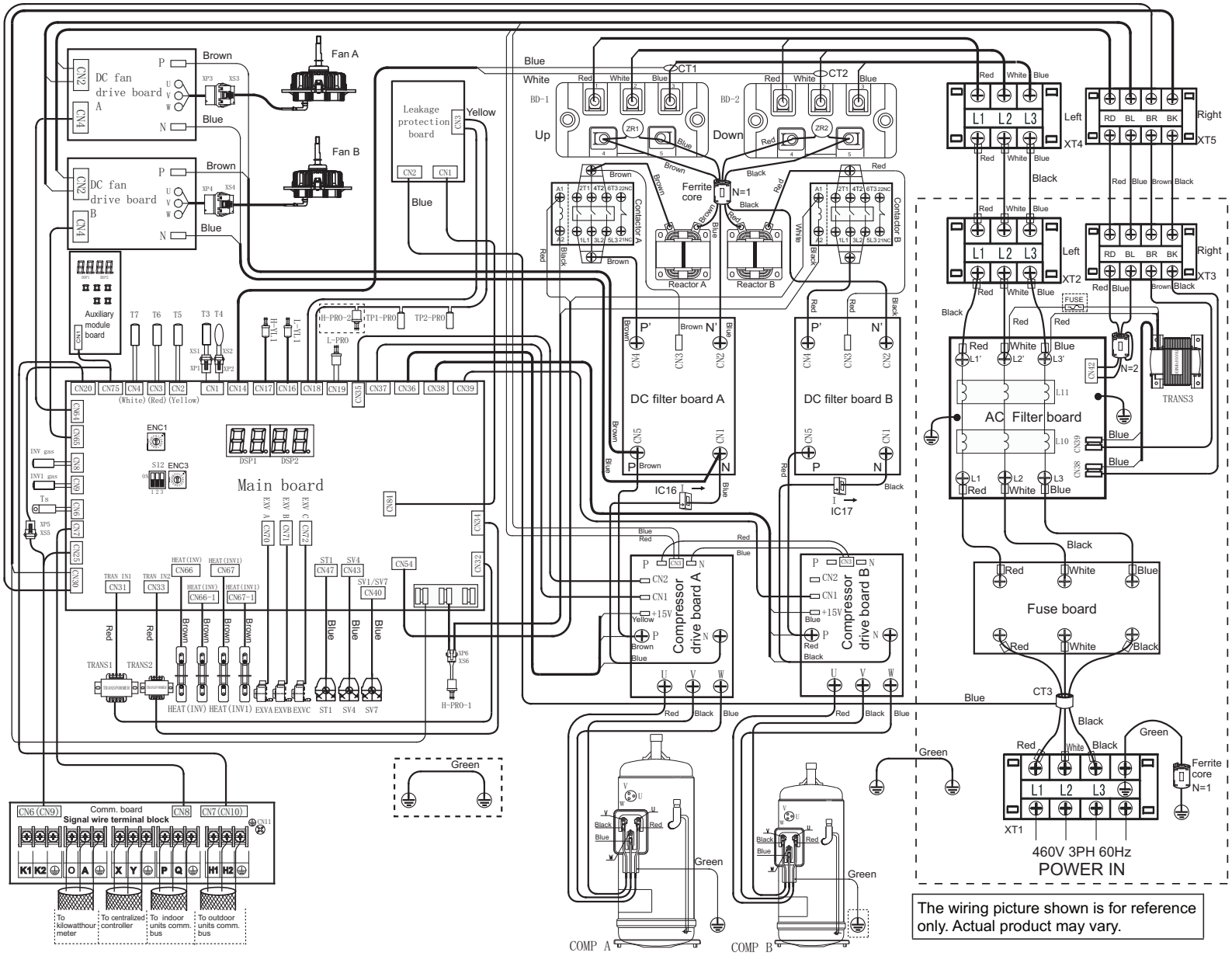

Fig. 39 —Wiring Diagram (38VMA144HDS6-1)

Electronic Control Box Layout

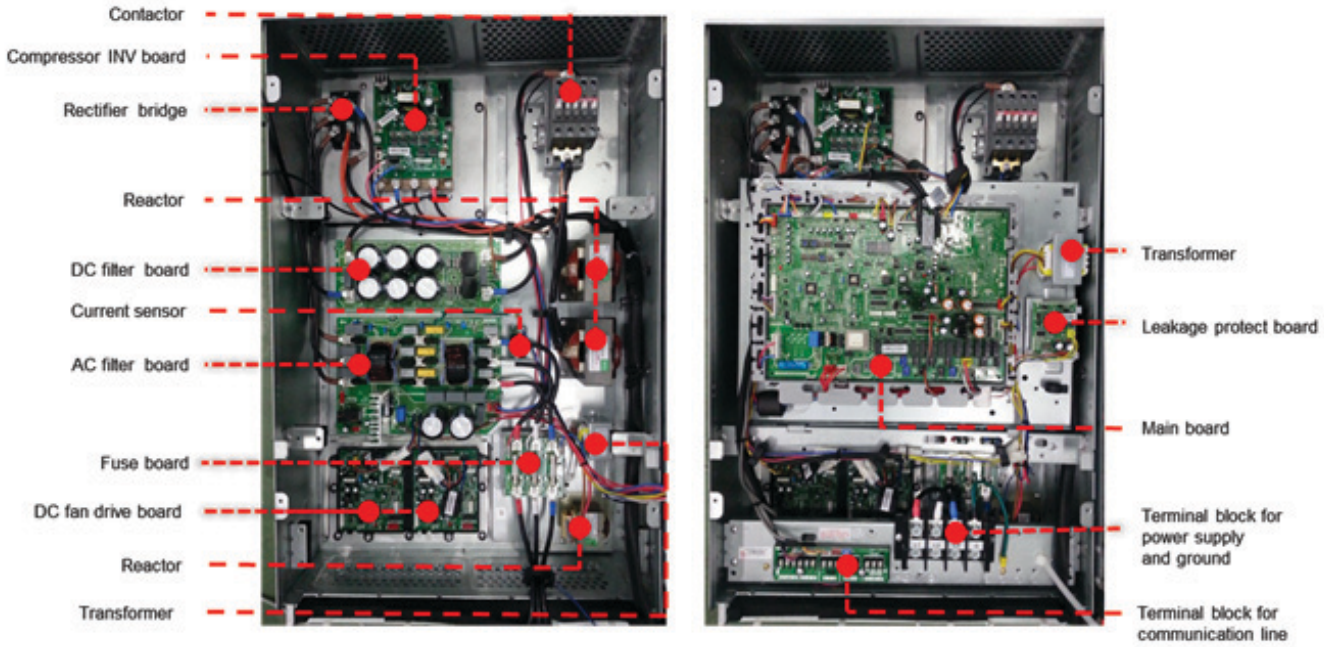

Fig. 40 —38VMA072, 096, 120HDS5-1

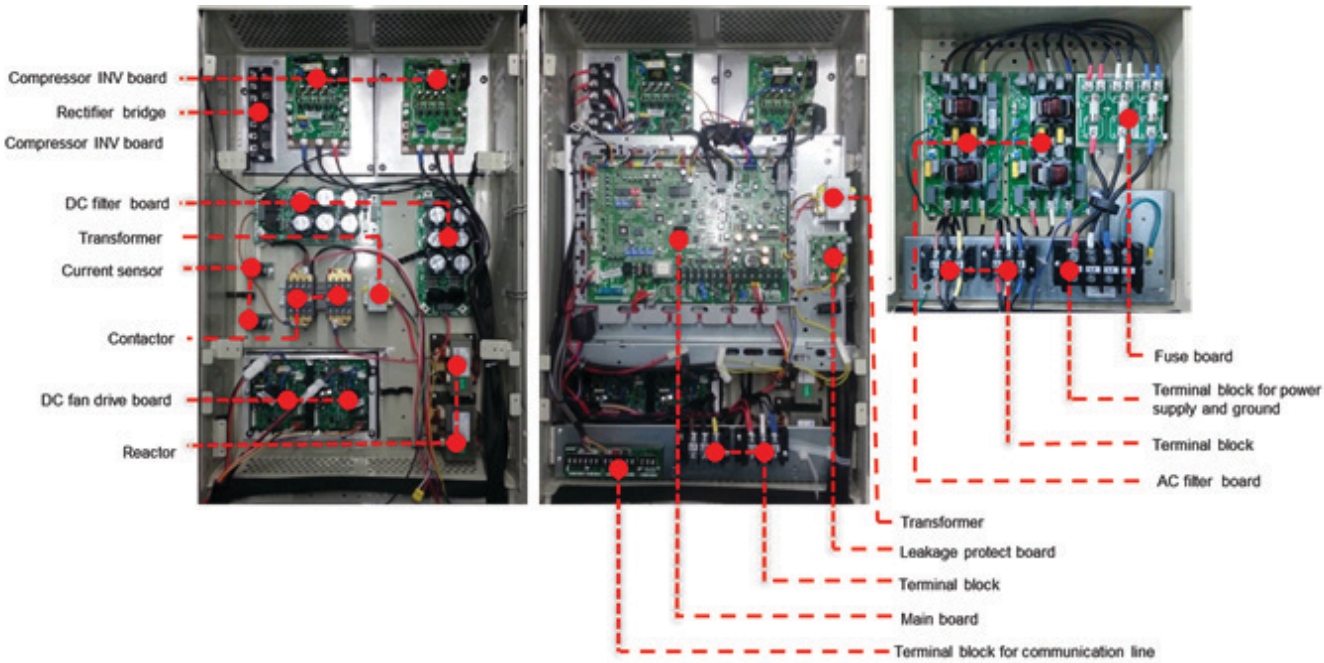

Fig. 41 —38VMA144HDS5-1

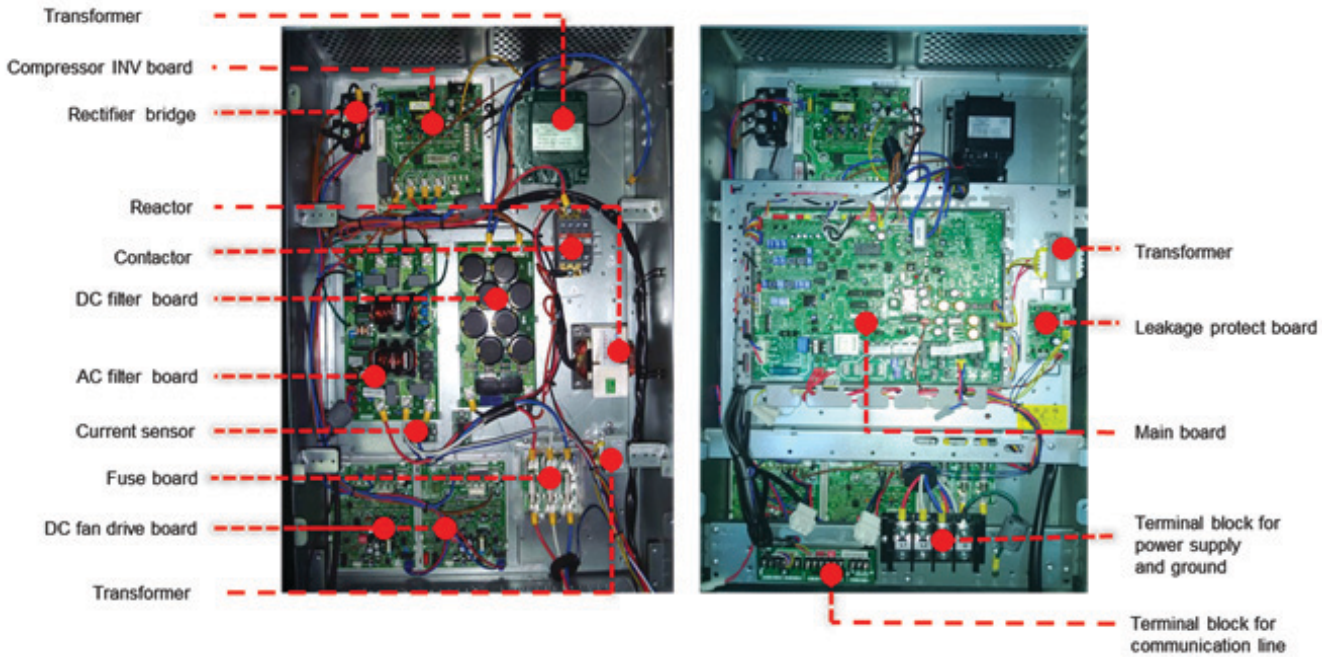

Fig. 42 —38VMA072, 096, 120HDS6-1

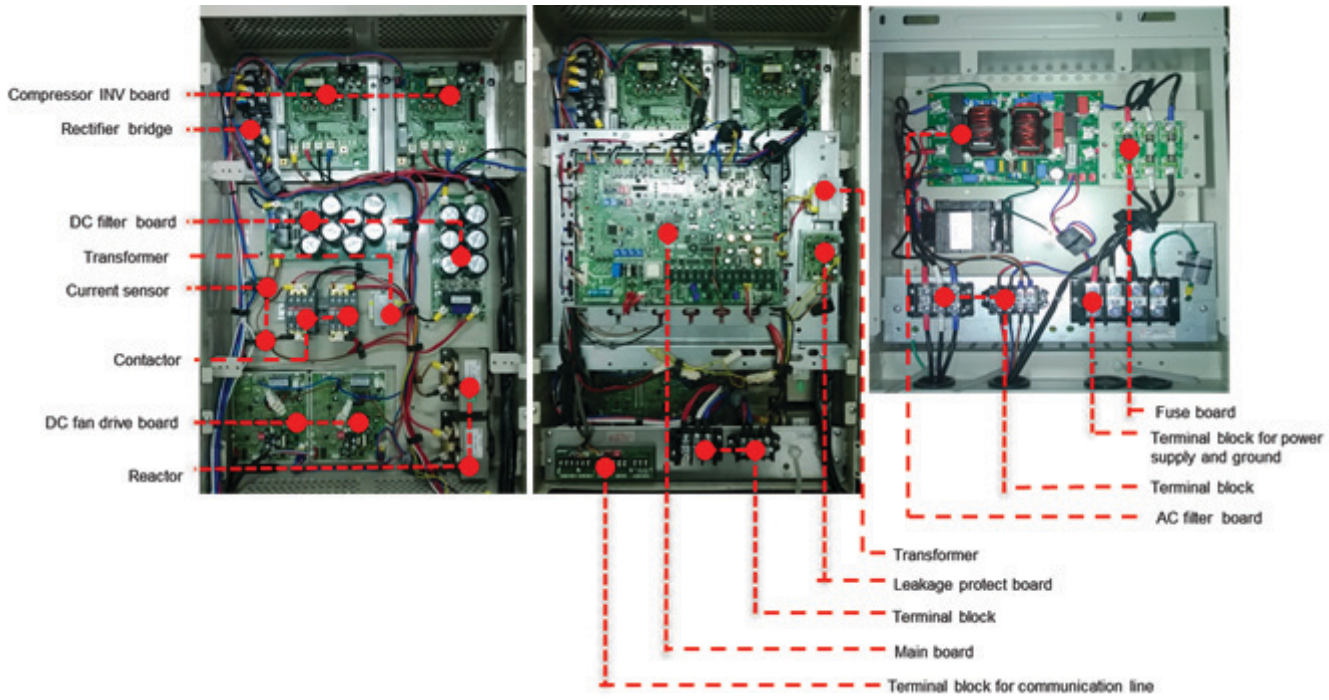

Fig. 43 —38VMA144HDS6-1

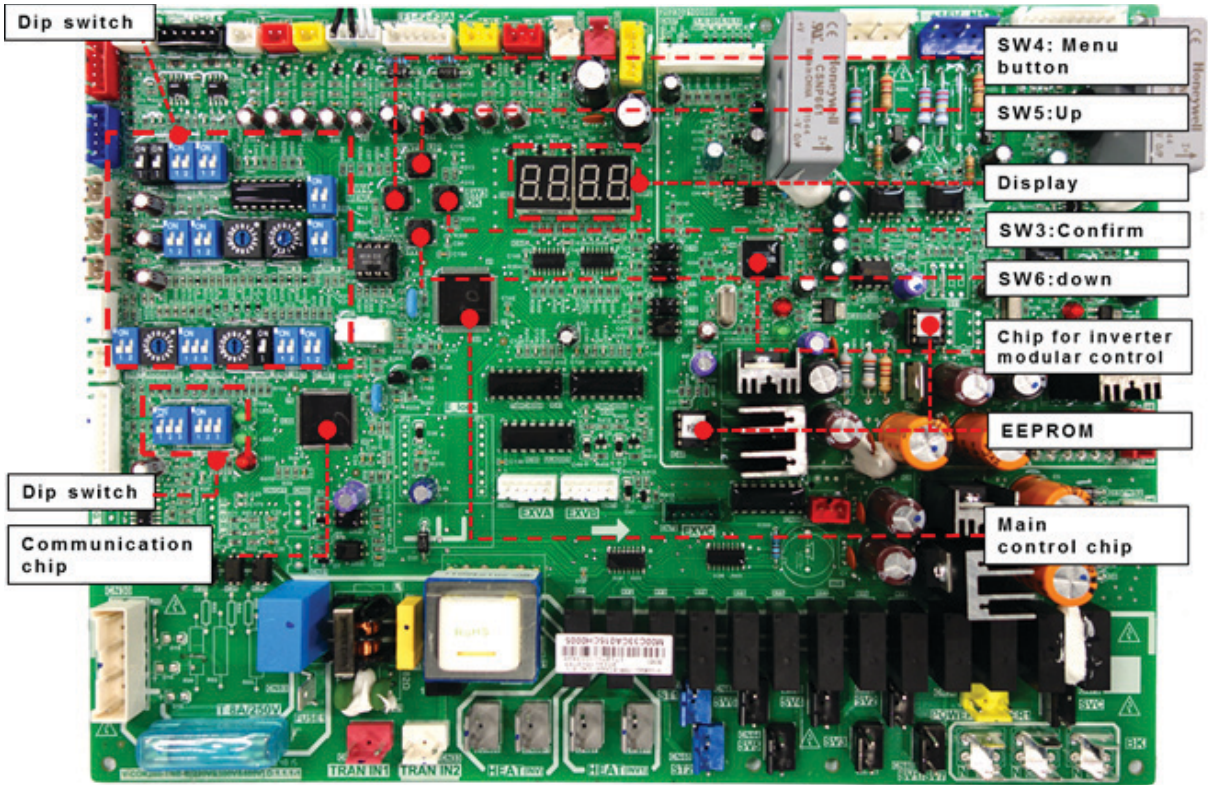

Fig. 44 —Main Control Board Layout

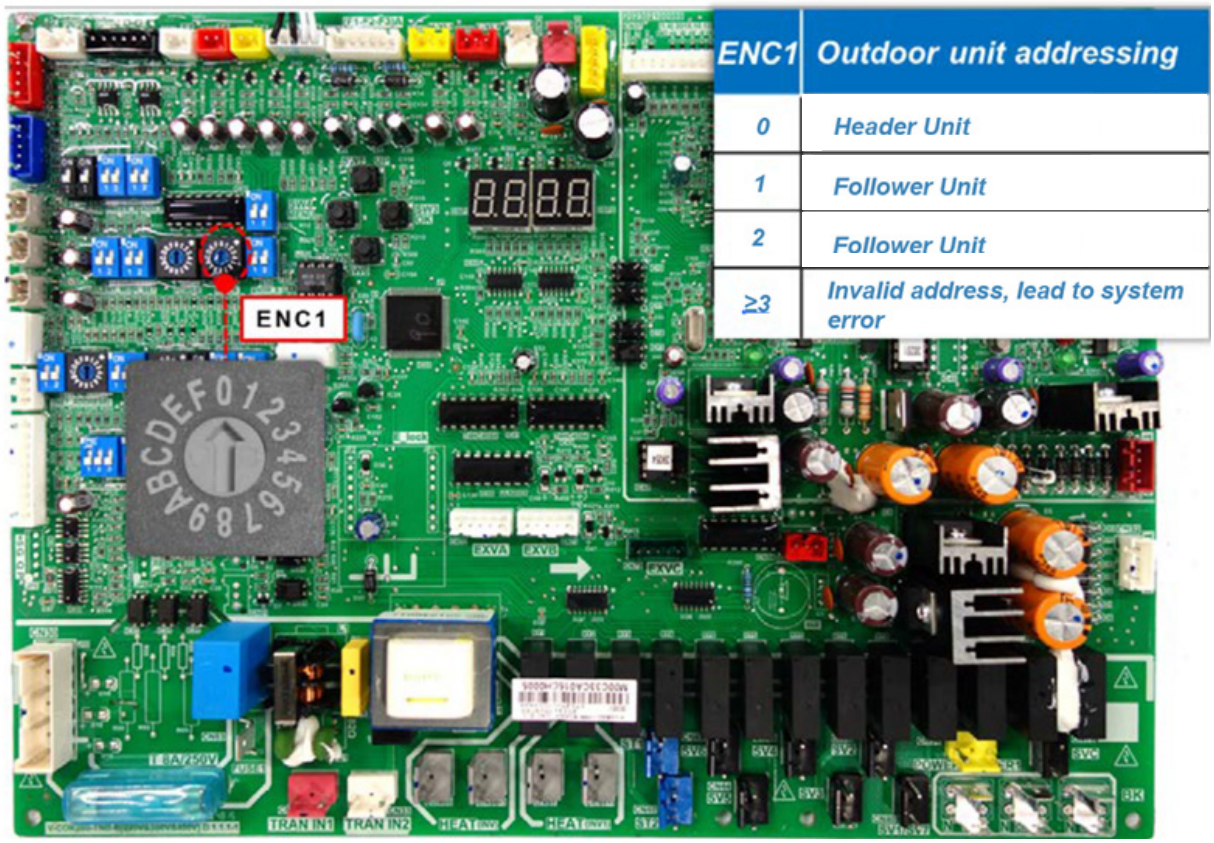

ENC1	Outdoor unit addressing
0	Header Unit
1	Follower Unit
2	Follower Unit
≥3	Invalid address, lead to system error

Fig. 45 —ENC1-Outdoor Unit Addressing

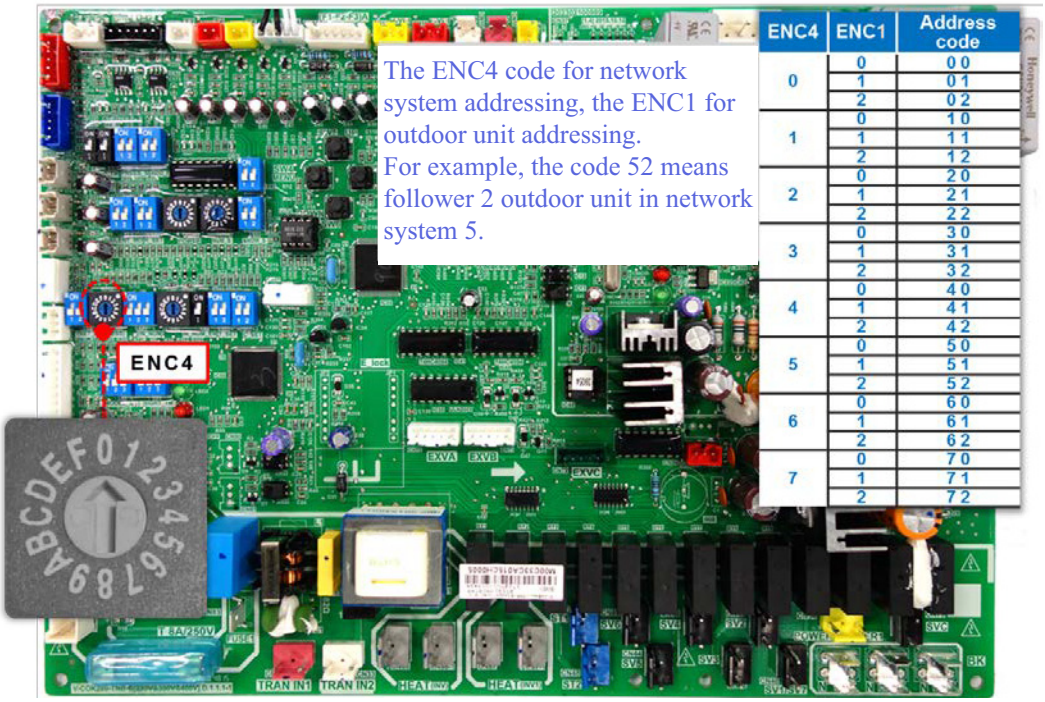

Fig. 46 —ENC4-Network Addressing

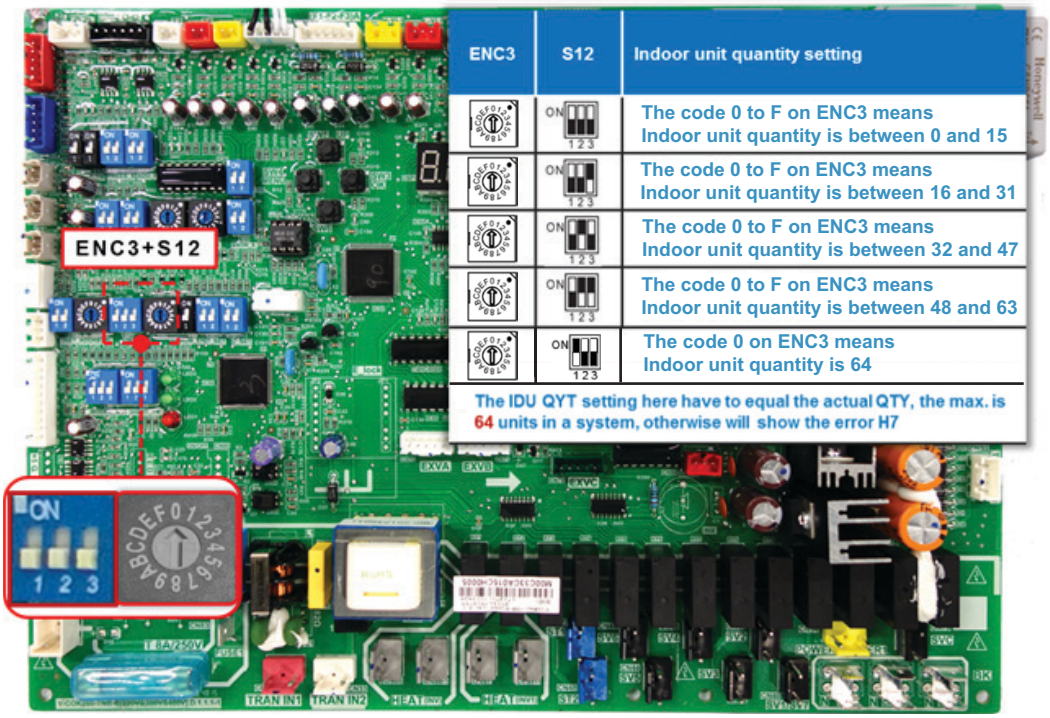

Fig. 47 —ENC3 + 12 Indoor Unit Quantity Setting

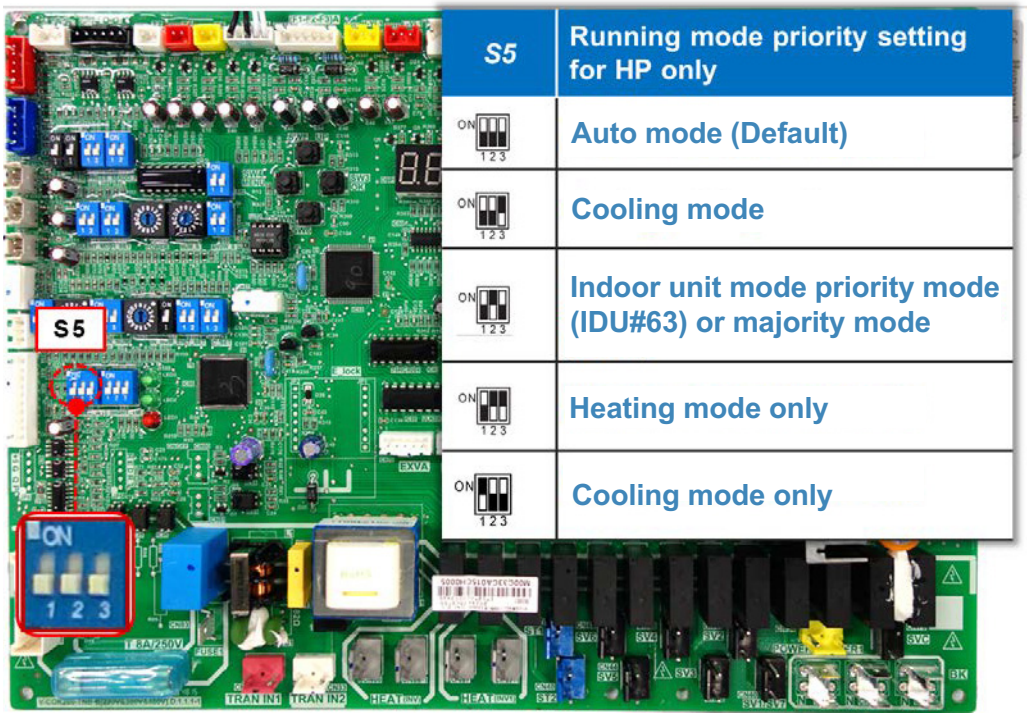

S5	Running mode priority setting for HP only
ON 1 2 3	Auto mode (Default)
ON 1 2 3	Cooling mode
ON 1 2 3	Indoor unit mode priority mode (IDU#63) or majority mode
ON 1 2 3	Heating mode only
ON 1 2 3	Cooling mode only

Fig. 48 —Running Mode Priority Setting

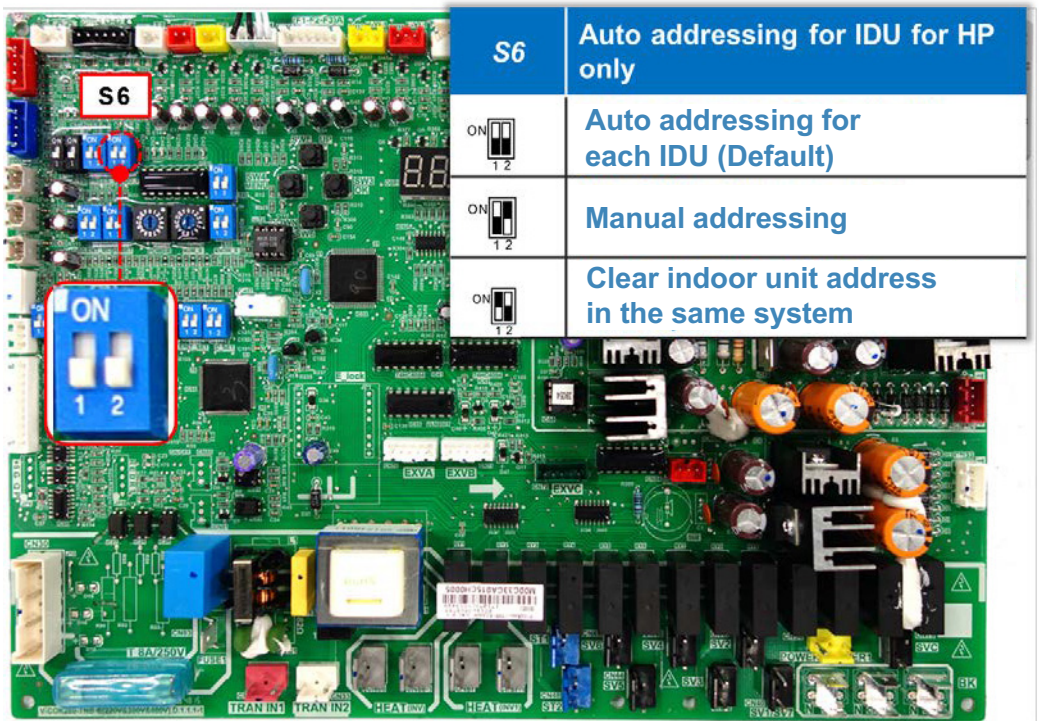

S6	Auto addressing for IDU for HP only
ON 1 2	Auto addressing for each IDU (Default)
ON 1 2	Manual addressing
ON 1 2	Clear indoor unit address in the same system

Fig. 49 —S6-Auto Addressing

$$= \frac{8.06}{8.06+R}$$

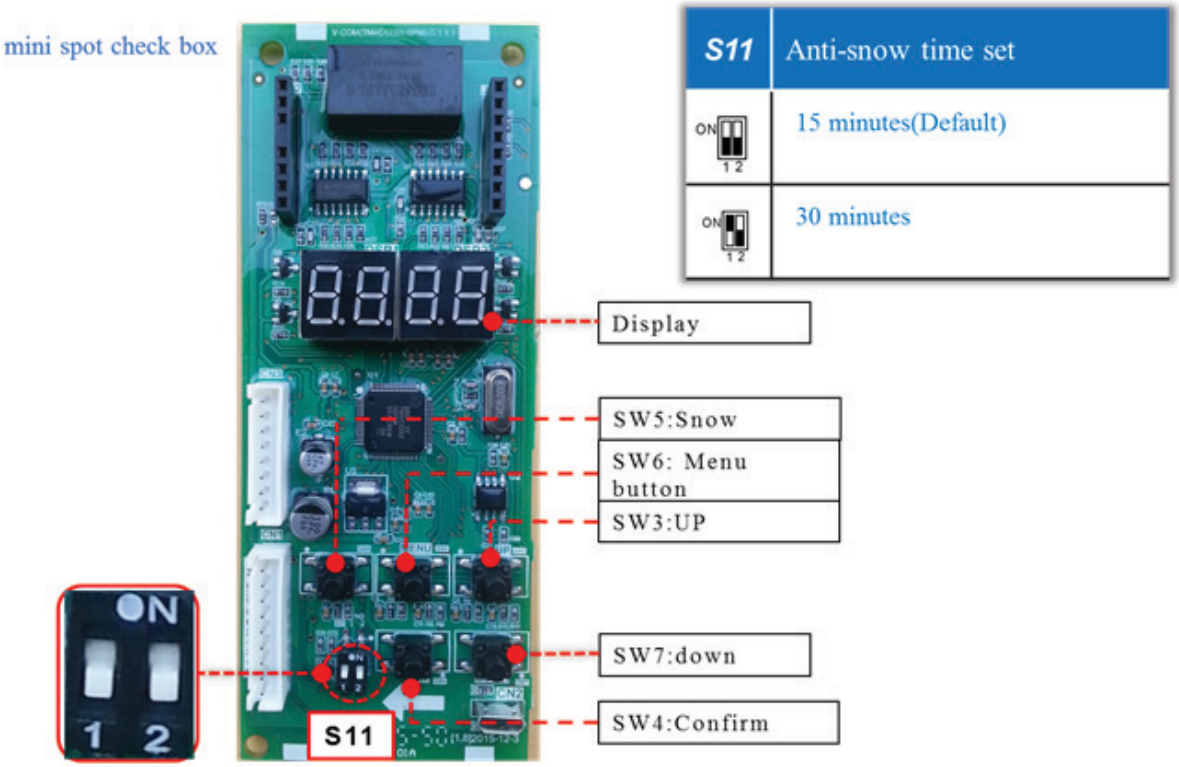

Fig. 50 —S11- Anti-Snow Setting

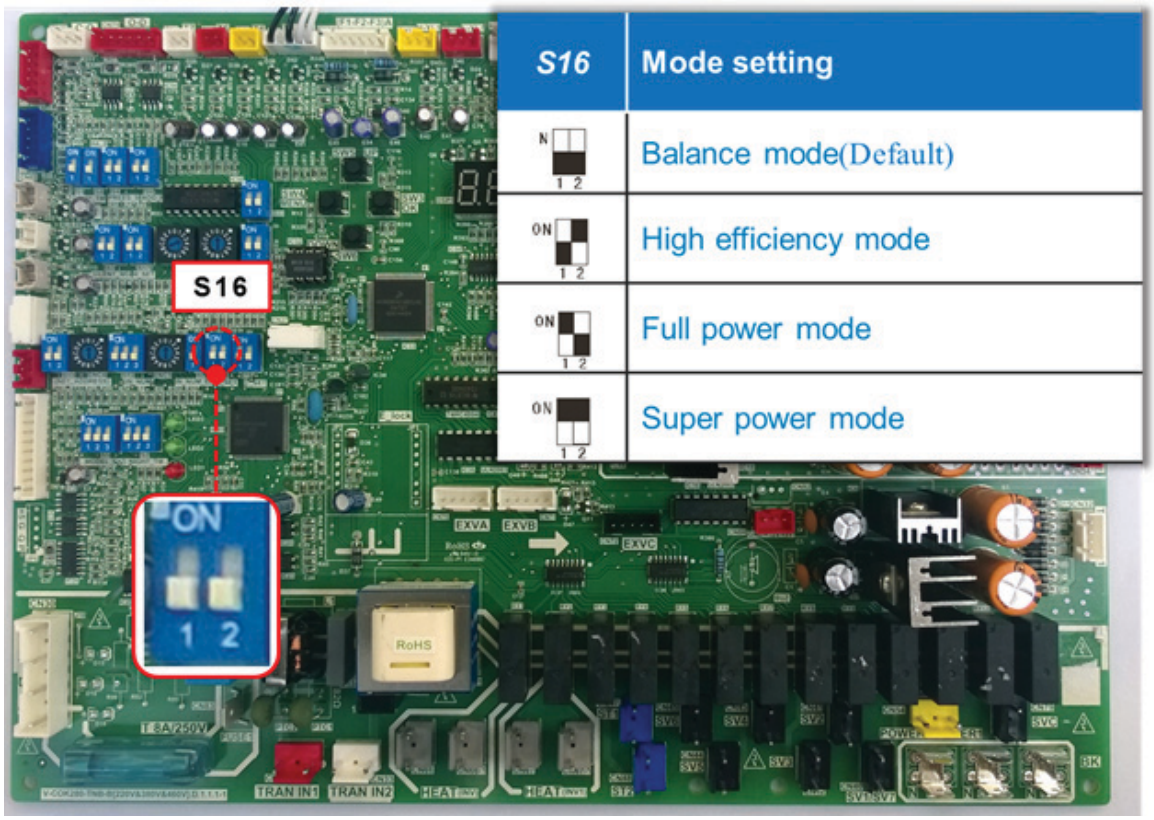

Fig. 51 —S16 - Mode Setting

$$= \frac{8.06}{8.06+R}$$

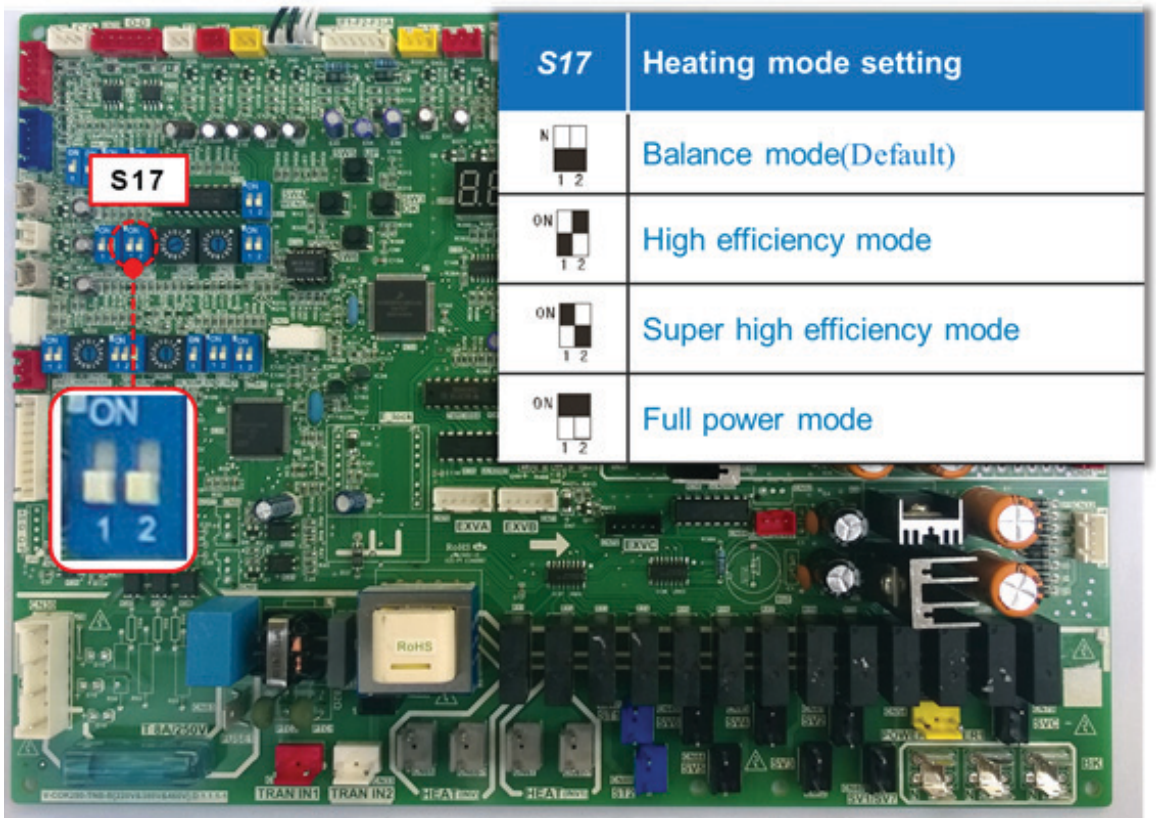

S17	Heating mode setting
N 1 2	Balance mode(Default)
ON 1 2	High efficiency mode
ON 1 2	Super high efficiency mode
ON 1 2	Full power mode

Fig. 52 —S17 - Heating Mode Setting

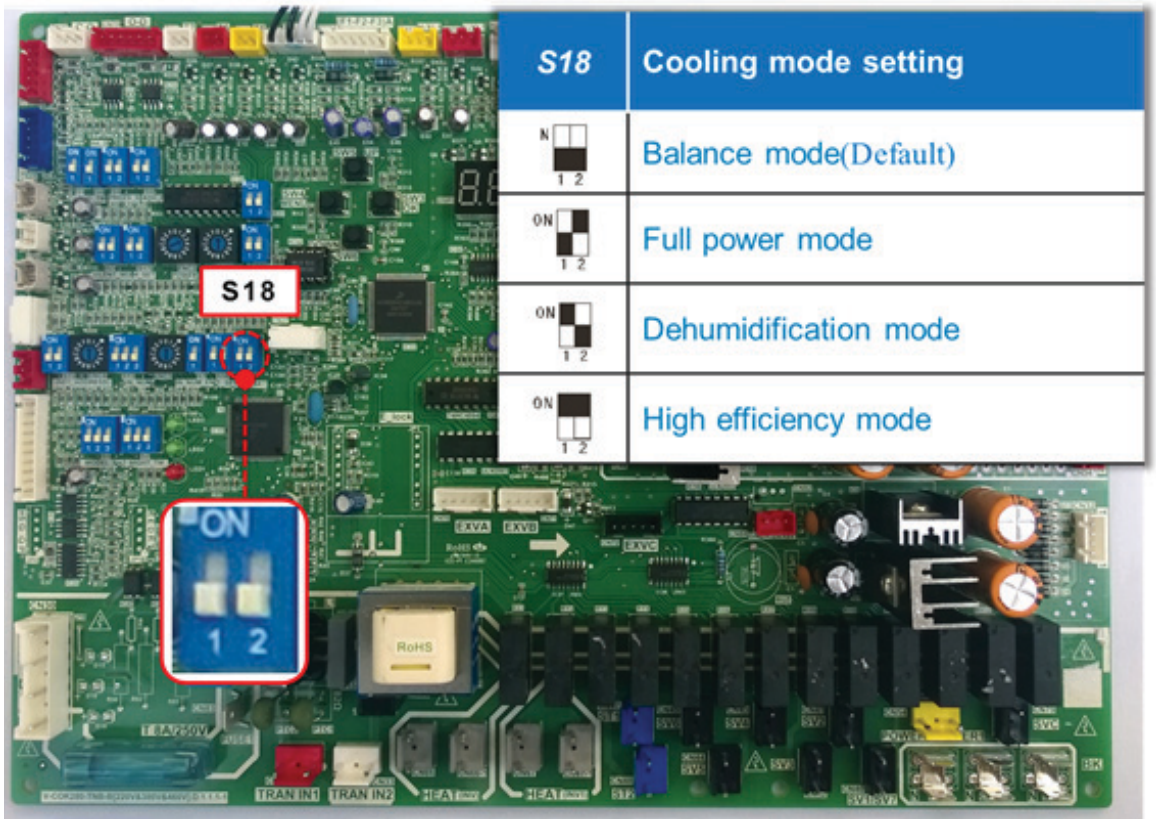

S18	Cooling mode setting
N 1 2	Balance mode(Default)
ON 1 2	Full power mode
ON 1 2	Dehumidification mode
ON 1 2	High efficiency mode

Fig. 53 —S18 - Cooling Mode Setting

Table 34 —Resistance of Temperature Sensor A*

TEMP. (°F)	RESISTANCE (KΩ)	VOLTAGE (V)
-38.2	387.1	0.10
-36.4	360.9	0.11
-34.6	336.7	0.17
-32.8	314.2	0.12
-31.0	293.4	0.13
-29.2	274.0	0.14
-27.4	256.0	0.15
-25.6	239.4	0.16
-23.8	223.9	0.17
-22.0	209.5	0.18
-20.2	196.1	0.20
-18.4	183.7	0.21
-16.6	172.1	0.22
-14.8	161.4	0.24
-13.0	151.3	0.25
-11.2	142.0	0.27
-9.4	133.3	0.28
-7.6	125.2	0.30
-5.8	117.7	0.32
-4.0	110.6	0.34
-2.2	104.0	0.36
-0.4	97.9	0.38
1.4	92.1	0.40
3.2	86.7	0.42
5.0	81.7	0.45
6.8	77.0	0.47
8.6	72.6	0.50
10.4	68.4	0.53
12.2	64.6	0.55
14.0	60.9	0.58
15.8	57.5	0.61
17.6	54.3	0.64
19.4	51.3	0.68
21.2	48.5	0.71
23.0	45.9	0.75
24.8	43.4	0.78
26.6	41.0	0.82
28.4	38.9	0.86
30.2	36.8	0.90
32.0	34.8	0.94
33.8	33.0	0.98
35.6	31.3	1.02
37.4	29.7	1.07
39.2	28.1	1.11
41.0	26.7	1.16
42.8	25.3	1.21
44.6	24.0	1.25
46.4	22.9	1.30
48.2	21.7	1.35
50.0	20.6	1.40

TEMP. (°F)	RESISTANCE (KΩ)	VOLTAGE (V)
51.8	19.62	1.46
53.6	18.66	1.51
55.4	17.75	1.56
57.2	16.90	1.61
59.0	16.08	1.67
60.8	15.31	1.72
62.6	14.59	1.78
64.4	13.90	1.83
66.2	13.25	1.89
68.0	12.63	1.95
69.8	12.05	2.00
71.6	11.50	2.06
73.4	10.97	2.12
75.2	10.47	2.17
77.0	10.00	2.23
78.8	9.55	2.29
80.6	9.13	2.34
82.4	8.72	2.40
84.2	8.34	2.46
86.0	7.97	2.51
87.8	7.63	2.57
89.6	7.30	2.62
91.4	6.98	2.68
93.2	6.69	2.73
95.0	6.40	2.79
96.8	6.13	2.84
98.6	5.88	2.89
100.4	5.63	2.94
102.2	5.40	2.99
104.0	5.18	3.04
105.8	4.97	3.10
107.6	4.76	3.14
109.4	4.57	3.19
111.2	4.39	3.24
113.0	4.21	3.28
114.8	4.05	3.33
116.6	3.89	3.37
118.4	3.73	3.42
120.2	3.59	3.46
122.0	3.45	3.50
123.8	3.32	3.54
125.6	3.19	3.58
127.4	3.07	3.62
129.2	2.95	3.66
131.0	2.84	3.70
132.8	2.74	3.73
134.6	2.64	3.77
136.4	2.54	3.80
138.2	2.45	3.83
140.0	2.36	3.87

TEMP. (°F)	RESISTANCE (KΩ)	VOLTAGE (V)
141.8	2.27	3.90
143.6	2.19	3.93
145.4	2.11	3.96
147.2	2.04	3.99
149.0	1.97	4.02
150.8	1.90	4.05
152.6	1.83	4.07
154.4	1.77	4.10
156.2	1.71	4.13
158.0	1.65	4.15
159.8	1.59	4.17
161.6	1.54	4.20
163.4	1.49	4.22
165.2	1.44	4.24
167.0	1.39	4.26
168.8	1.34	4.28
170.6	1.30	4.30
172.4	1.26	4.32
174.2	1.22	4.34
176.0	1.18	4.36
177.8	1.14	4.38
179.6	1.10	4.40
181.4	1.07	4.41
183.2	1.03	4.43
185.0	1.00	4.45
186.8	0.97	4.46
188.6	0.94	4.48
190.4	0.91	4.49
192.2	0.88	4.51
194.0	0.86	4.52
195.8	0.83	4.53
197.6	0.80	4.54
199.4	0.78	4.56
201.2	0.76	4.57
203.0	0.73	4.58
204.8	0.71	4.59
206.6	0.69	4.60
208.4	0.67	4.61
210.2	0.65	4.62
212.0	0.63	4.63
213.8	0.61	4.64
215.6	0.60	4.65
217.4	0.58	4.66
219.2	0.56	4.67
221.0	0.55	4.68

* Outdoor unit: T3, T4, T5, T6, T7

Indoor unit: T1, T2a, T2b

The Resistance of 77°F is 10 KΩ±1%. The relation between voltage and resistance is: V *5

Table 35 —Resistance of Temperature sensor B **

TEMP. (°F)	RESISTANCE (KΩ)	VOLTAGE (V)
-4.0	542.70	0.07
-2.2	511.90	0.08
-0.4	483.00	0.08
1.4	455.90	0.09
3.2	430.50	0.09
5.0	406.70	0.10
6.8	384.30	0.10
8.6	363.30	0.11
10.4	343.60	0.11
12.2	325.10	0.12
14.0	307.70	0.13
15.8	291.30	0.13
17.6	275.90	0.14
19.4	261.40	0.15
21.2	247.80	0.16
23.0	234.90	0.16
24.8	222.80	0.17
26.6	211.40	0.18
28.4	200.70	0.19
30.2	190.50	0.20
32.0	180.90	0.21
33.8	171.90	0.22
35.6	163.30	0.23
37.4	155.20	0.25
39.2	147.60	0.26
41.0	140.40	0.27
42.8	133.50	0.28
44.6	127.10	0.30
46.4	121.00	0.31
48.2	115.20	0.33
50.0	109.80	0.34
51.8	104.60	0.36
53.6	99.69	0.37
55.4	95.05	0.39
57.2	90.66	0.41
59.0	86.49	0.43
60.8	82.54	0.44
62.6	78.79	0.46
64.4	75.24	0.48
66.2	71.86	0.50
68.0	68.66	0.52
69.8	65.62	0.55
71.6	62.73	0.57
73.4	59.98	0.59
75.2	57.37	0.61
77.0	54.89	0.64
78.8	52.53	0.66
80.6	50.28	0.69
82.4	48.14	0.72
84.2	46.11	0.74
86.0	44.17	0.77
87.8	42.33	0.80

TEMP. (°F)	RESISTANCE (KΩ)	VOLTAGE (V)
89.6	40.57	0.83
91.4	38.89	0.86
93.2	37.30	0.89
95.0	35.78	0.92
96.8	34.32	0.95
98.6	32.94	0.98
100.4	31.62	1.01
102.2	30.36	1.05
104.0	29.15	1.08
105.8	28.00	1.12
107.6	26.90	1.15
109.4	25.86	1.19
111.2	24.85	1.22
113.0	23.89	1.26
114.8	22.89	1.30
116.6	22.10	1.34
118.4	21.26	1.37
120.2	20.46	1.41
122.0	19.69	1.45
123.8	18.96	1.49
125.6	18.26	1.53
127.4	17.58	1.57
129.2	16.94	1.61
131.0	16.32	1.65
132.8	15.73	1.69
134.6	15.16	1.73
136.4	14.62	1.78
138.2	14.09	1.82
140.0	13.59	1.86
141.8	13.11	1.90
143.6	12.65	1.94
145.4	12.21	1.99
147.2	11.79	2.03
149.0	11.38	2.07
150.8	10.99	2.11
152.6	10.61	2.16
154.4	10.25	2.20
156.2	9.90	2.24
158.0	9.57	2.29
159.8	9.25	2.33
161.6	8.94	2.37
163.4	8.64	2.41
165.2	8.36	2.45
167.0	8.08	2.50
168.8	7.82	2.54
170.6	7.57	2.58
172.4	7.32	2.62
174.2	7.09	2.66
176.0	6.86	2.70
177.8	6.64	2.74
179.6	6.43	2.78
181.4	6.23	2.82

TEMP. (°F)	RESISTANCE (KΩ)	VOLTAGE (V)
183.2	6.03	2.86
185.0	5.84	2.90
186.8	5.66	2.94
188.6	5.49	2.97
190.4	5.32	3.01
192.2	5.16	3.05
194.0	5.00	3.08
195.8	4.85	3.12
197.6	4.70	3.16
199.4	4.56	3.19
201.2	4.43	3.23
203.0	4.29	3.26
204.8	4.17	3.30
206.6	4.04	3.33
208.4	3.93	3.36
210.2	3.81	3.39
212.0	3.70	3.43
213.8	3.59	3.46
215.6	3.49	3.49
217.4	3.39	3.52
219.2	3.30	3.55
221.0	3.20	3.58
222.8	3.11	3.61
224.6	3.02	3.63
226.4	2.94	3.66
228.2	2.86	3.69
230.0	2.78	3.72
231.8	2.70	3.74
233.6	2.63	3.77
235.4	2.56	3.79
237.2	2.49	3.82
239.0	2.42	3.84
240.8	2.36	3.87
242.6	2.29	3.89
244.4	2.23	3.91
246.2	2.17	3.94
248.0	2.12	3.96
249.8	2.06	3.98
251.6	2.01	4.00
253.4	1.95	4.02
255.2	1.90	4.04
257.0	1.86	4.06
258.8	1.81	4.08
260.6	1.76	4.10
262.4	1.72	4.12
264.2	1.67	4.14
266.0	1.63	4.15

** Outdoor unit: INV Gas, INV1 Gas

The Resistance of 194°F is 5KΩ±3%. The relation between voltage and resistance is: V *5

Table 36 — Low Pressure Sensor Voltage Characteristics*

LOW PRESSURE (PSI)	RESISTANCE (KΩ)	OUTPUT VOLTAGE(V)	RESISTANCE (KΩ)	OUTPUT VOLTAGE(V)
14.5	49.51	0.70	13.61	1.86
16.0	47.91	0.72	13.15	1.90
17.4	46.40	0.74	12.50	1.96
18.9	44.97	0.76	11.89	2.02
20.3	43.61	0.78	11.50	2.06
21.8	42.31	0.80	10.95	2.12
23.2	41.09	0.82	10.43	2.18
24.7	39.92	0.84	9.93	2.24
26.1	38.80	0.86	9.46	2.30
27.6	37.73	0.88	9.02	2.36
30.5	35.74	0.92	8.59	2.42
31.9	34.81	0.94	8.19	2.48
33.4	33.92	0.96	7.81	2.54
34.8	33.06	0.98	7.32	2.62
37.7	31.45	1.02	6.98	2.68
39.2	30.69	1.04	6.54	2.76
42.1	29.25	1.08	6.23	2.82
43.5	28.58	1.10	5.84	2.90
46.4	27.29	1.14	5.46	2.98
47.9	26.68	1.16	5.20	3.04
50.8	25.52	1.20	4.86	3.12
53.7	24.44	1.24	4.53	3.20
55.1	23.92	1.26	4.23	3.28
58.0	22.94	1.30	3.93	3.36
60.9	22.015	1.34	3.59	3.46
63.8	21.14	1.38	3.32	3.54
66.7	20.32	1.42	3.07	3.62
69.6	19.54	1.46	2.77	3.72
72.5	18.81	1.50	2.54	3.80
75.4	18.11	1.54	2.27	3.90
78.3	17.45	1.58	2.01	4.00
81.2	16.82	1.62	1.77	4.10
84.1	16.22	1.66	1.53	4.20
88.5	15.37	1.72	1.31	4.30
91.4	14.84	1.76	1.10	4.40
94.3	14.33	1.80	0.89	4.50

* Outdoor unit: Low pressure sensor

Table 37 —High Pressure Sensor Voltage Characteristics**

HIGH PRESSURE (PSI)	RESISTANCE (KΩ)	OUTPUT VOLTAGE (V)
14.5	60.60	0.59
29.0	51.74	0.67
43.5	44.90	0.76
58.0	39.47	0.85
72.5	35.05	0.93
87.0	31.38	1.02
101.5	28.29	1.11
116.0	25.64	1.19
130.5	23.36	1.28
145.0	21.36	1.37
159.5	19.61	1.46
174.0	18.05	1.54
188.5	16.66	1.63
203.0	15.40	1.72
217.5	14.27	1.80
232.0	13.25	1.89
246.5	12.31	1.98
261.0	11.45	2.06
275.5	10.66	2.15
290.0	9.94	2.24
304.5	9.26	2.33
319.0	8.64	2.41
333.5	8.06	2.50
348.0	7.52	2.59
362.5	7.01	2.68
377.0	6.54	2.76
391.5	6.09	2.85
406.0	5.67	2.93
420.5	5.28	3.02
435.0	4.90	3.11
449.5	4.55	3.19
464.0	4.22	3.28
478.5	3.90	3.37
493.0	3.60	3.46
507.5	3.31	3.54
522.0	3.04	3.63
536.5	2.78	3.72
551.0	2.53	3.80
565.5	2.30	3.89
580.0	2.07	3.98
594.5	1.85	4.06
609.0	1.64	4.15
623.5	1.45	4.24
638.0	1.25	4.33
652.5	1.07	4.41
667.0	0.89	4.50
681.5	0.72	4.59
696.0	0.56	4.67
710.5	0.40	4.76

** Outdoor unit: high pressure sensor

BILL OF MATERIAL

38VMA072HDS5-1, 38VMA096HDS5-1, 38VMA120HDS5-1

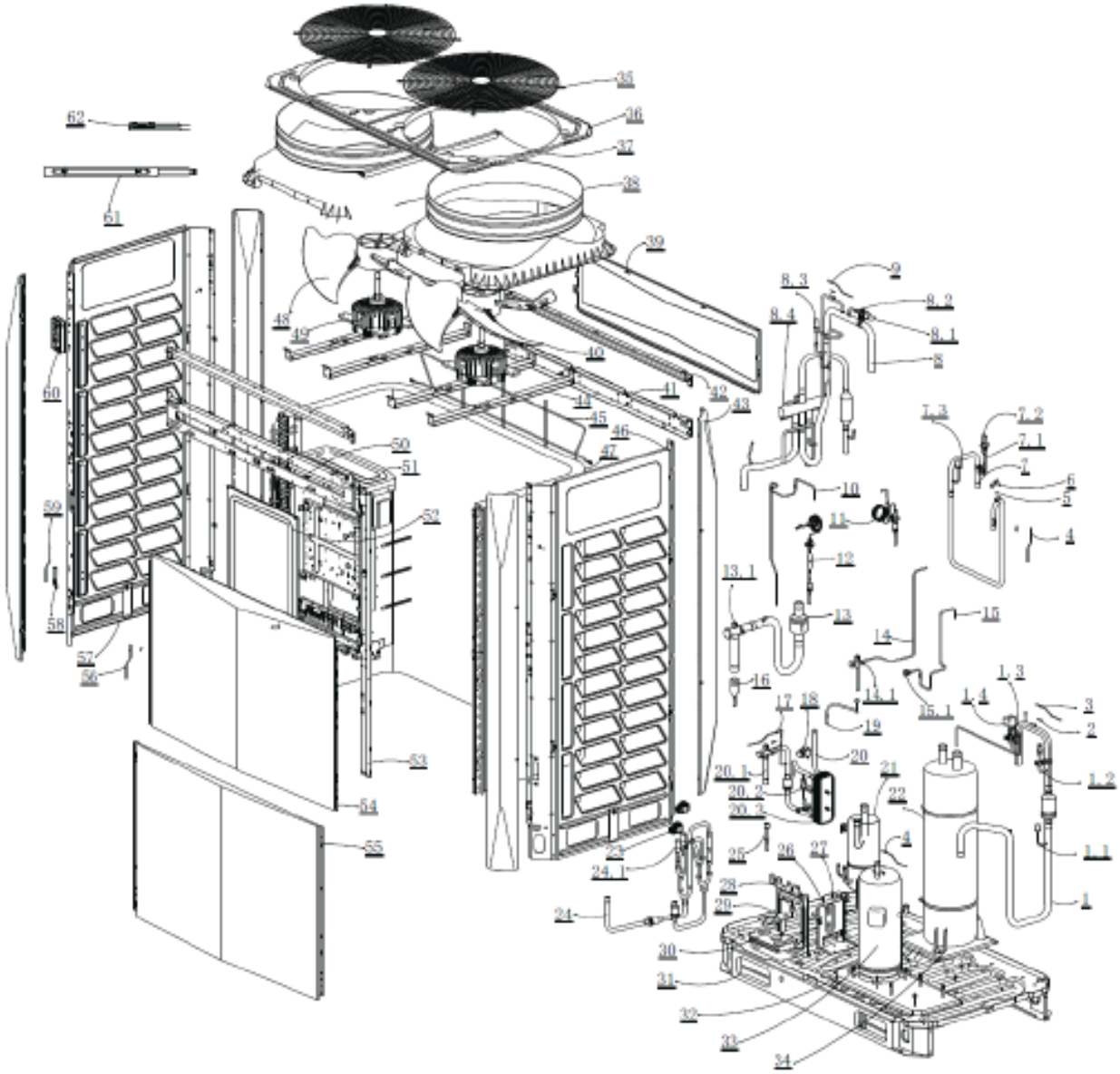

Fig. 54 —3 Phase Heat Pump Exploded View

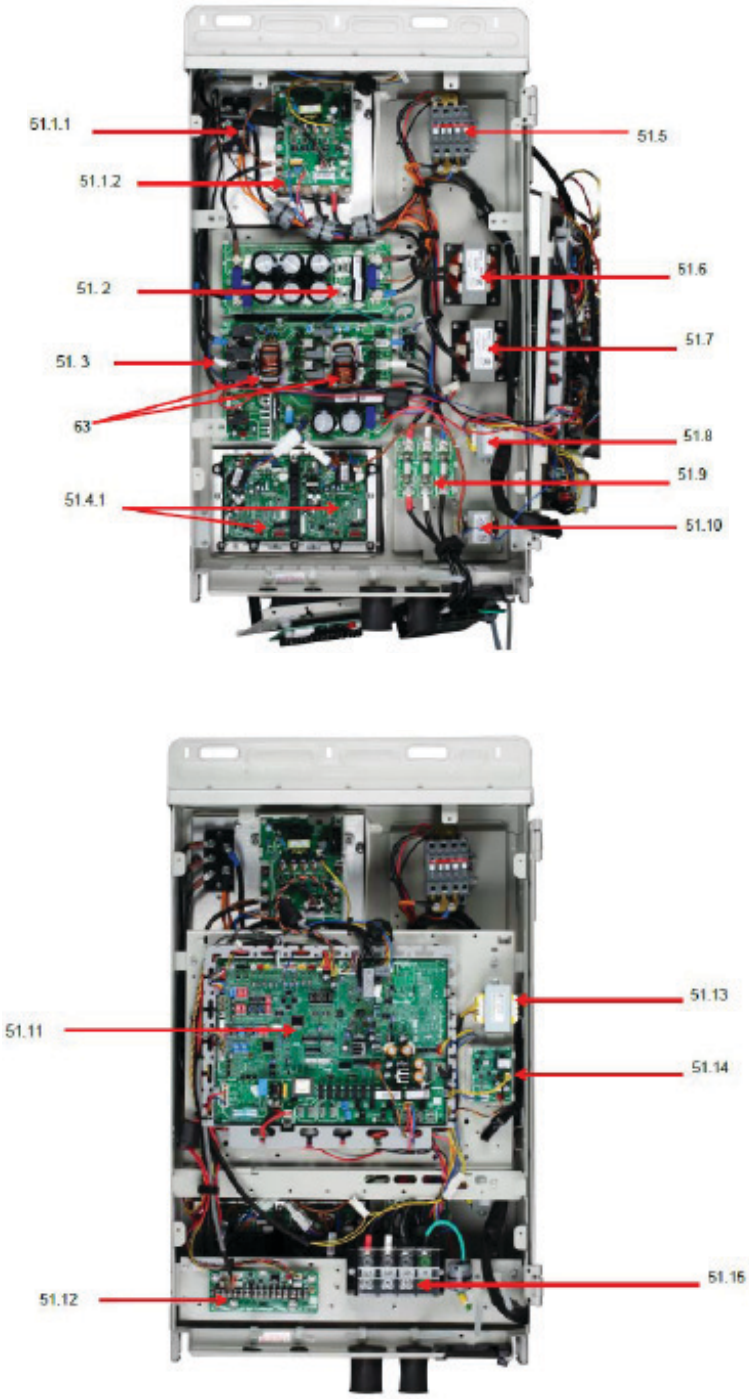

Fig. 55 —Control Board Views

Table 38 —3 Phase Heat Pump Parts Breakdown

NUMBER	PART NAME	QUANTITY	BOM CODE
1	Suction pipe assembly of compressor	1	15427000001920
1.1	Pressure switch	1	17400516000035
1.2	Fusible plug assembly	1	15427000001439
1.3	Solenoid valve assembly	1	15500205000010
1.4	Solenoid valve assembly	1	15500205000031
2	Temperature sensor clipper	6	12900102000005
3	Pipe temperature sensor assembly	1	11201007000252
4	Discharge temperature sensor assembly	2	11201007000308
5	Temperature sensor clipper	1	12900103000008
6	Temperature controller of discharge pipe side	1	17400513000066
7	Discharge pipe assembly of compressor	1	15427000001919
7.1	Needle valve	1	15500301000008
7.2	Pressure sensor	1	11201008000026
7.3	Pressure switch	1	17400516000428
8	4-way valve assembly	1	15427000001922
8.1	Pressure sensor	1	11201008000006
8.2	Needle valve	1	15500301000008
8.3	Pressure release valve	1	15500217000009
8.4	4-way valve	1	15500216000123
9	Pipe temperature sensor assembly	1	11201007000277
10	Connecting pipe assembly	1	15127000005498
11	Oil return capillary assembly	1	15427000000282
12	Oil balance pipe assembly	1	15427000000925
13	Low pressure valve assembly	1	15427000002220
13.1	Oil balance valve	1	15500204000088
14	Oil balance valve assembly	1	15427000001921
14.1	Low pressure valve	1	15500204000114
15	Needle valve assembly	1	15127000005138
15.1	Needle valve	1	15500301000011
16	Connection pipe assembly	1	15127000005158
17	Pipe Temp. sensor assembly	1	11201007000302
18	Solenoid coil	1	17400302000037
19	Connection pipe assembly	1	15127000005878
20	Liquid Service Valve Assembly	1	15427000001646
20.1	Liquid Service Valve	1	15500204000130
20.2	Solenoid valve	1	15500213000037
20.3	Plate heat exchanger	1	15700101000042
21	Oil separator	1	15500501000005
22	Gas-liquid separator	1	15500501000036
23	Solenoid coil	2	17400302000032
24	EXV assembly	1	15427000000364
24.1	Electric expansive valve (EEV)	2	15500213000144
25	Connecting pipe assembly	1	15127000005538
26	Fixed plate	1	12227000002772
27	Plate to fix pipe	1	12227000001124
28	Fixing panel of valve	1	12227000001085
29	Fixed plate	1	12227000004706
30	Seal pad	1	12627000000286
31	Bottom	1	12227000003336
32	Compressor support plate assembly	1	12227000003345
33	DC inverter compressor	1	11102020000021
34	fixed plate assembly	1	12227000002336
35	Fan guard	2	12927000000020
36	Cover	1	12227000000419
37	Cover supporter	1	12227000001263
38	Air outlet guide assembly	2	12127000000061
39	Rear upper panel	1	12227000000855

NUMBER	PART NAME	QUANTITY	BOM CODE
40	Propeller fan	1	12100105000383
41	Rear beam assembly	1	12227000001064
42	Cover supporter	2	12227000001212
43	Corner supporter	4	12227000001036
44	Motor supporter assembly	4	12227000001279
45	Rear grille	1	12927000000041
46	Right panel assembly	1	12227000003813
47	Condenser assembly	1	15827000000124
48	Propeller fan	1	12100105000384
49	Brushless DC motor	2	11002015000086
50	Front beam	1	12227000001065
51	E-part box assembly	1	17227000000800
51.1.1	Three phase bridge	1	11201418000002
51.1.2	Frequency converter module drive board brush glue components	1	17127000004776
51.2	Power module assembly	1	17127000001700
51.3	Power module assembly (filter board brush coating components)	1	17127000003430
51.4.1	Module assembly (fan module drive board brush coating components)	2	17127000004779
51.5	Contactor	1	11203502000083
51.6	Reactor	1	17400306000319
51.7	Reactor	1	17400306000310
51.8	Power transformer	1	11203103000137
51.9	Protector tube plate assembly	1	17127000002120
51.10	Reactor	1	17400306000323
51.11	Brush glue components	1	17127000005600
	Brush glue components	1	17127000005580
	Brush glue components	1	17127000005596
51.12	Wiring board brush glue assembly	1	17127000005136
51.13	Power transformer	1	11203103000178
51.14	Intermediate adapter board brush glue assembly	1	17127000001689
51.15	Wire joint, 4p	1	17400401001496
52	E-Part box cover	1	12227000006853
53	Supporter assembly	1	12227000005986
54	Top front cover	1	12227000000850
55	Lower front panel	1	12227000000779
56	Pipe temperature sensor assembly	1	11201007001786
57	Left panel assembly	1	12227000006792
58	Temperature sensor clipper	1	12127000000013
59	Room temperature sensor assembly	1	11201007000195
60	Network Controller	1	17211200000381
61	Compressor electric heater	2	17402001000033
62	Network resistor	2	17401204001127
63	Inductor	2	11201106000053

38VMA144HDS5-1

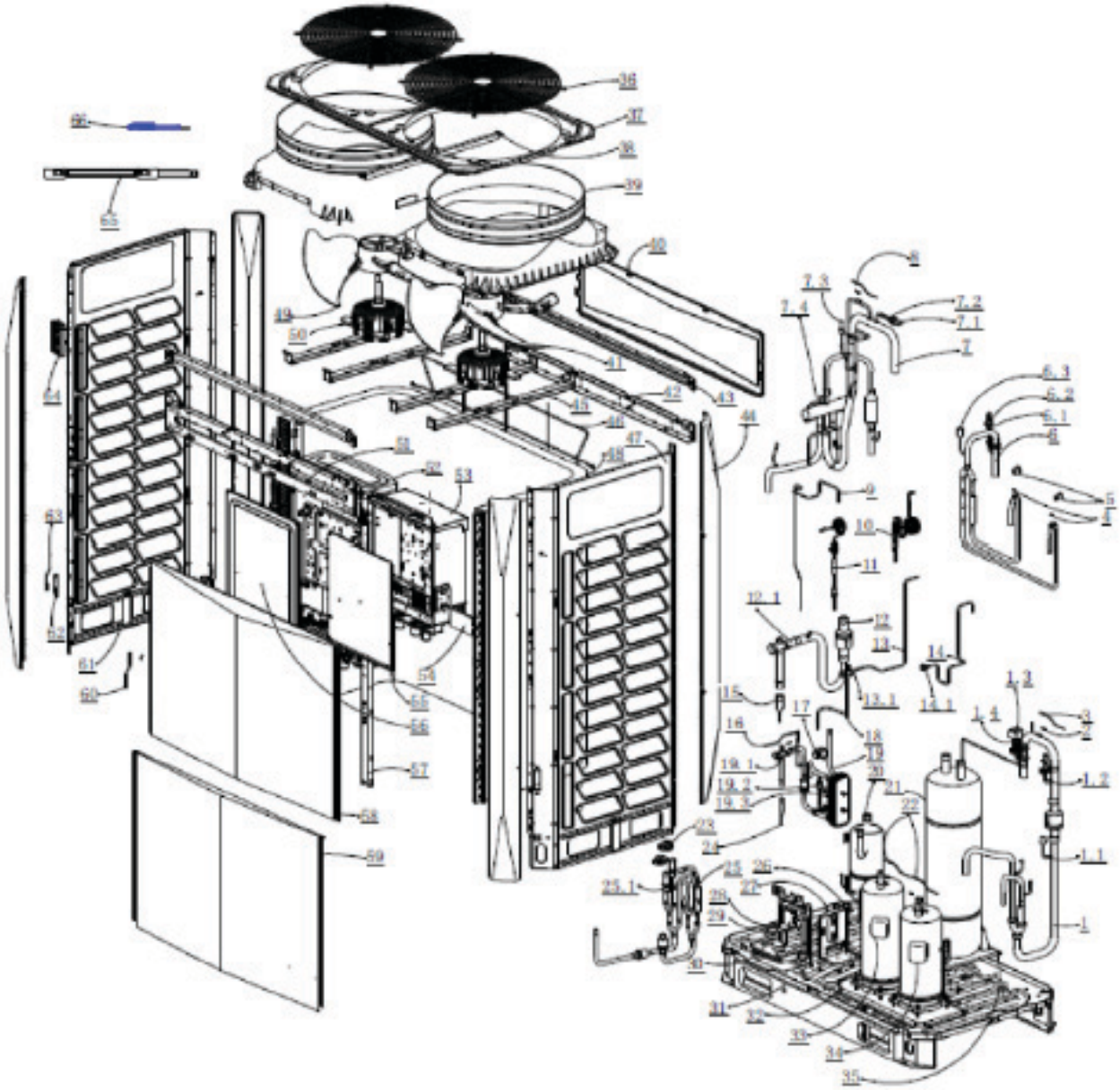

Fig. 56 —3 Phase Heat Pump Exploded View

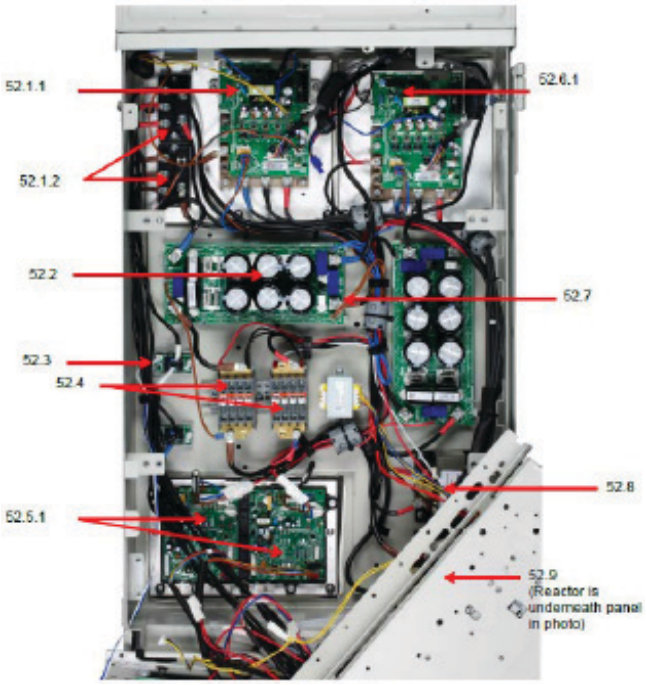
52.1.1
52.1.2
52.2
52.3
52.4
52.5.1
52.6.1
52.7
52.8
52.9
(Reactor is
underneath panel
in photo)

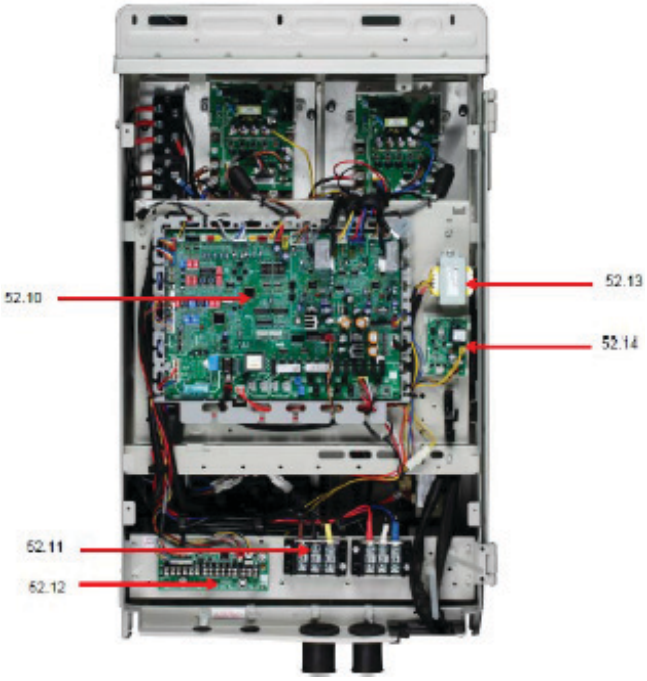
52.10
52.11
52.12
52.13
52.14

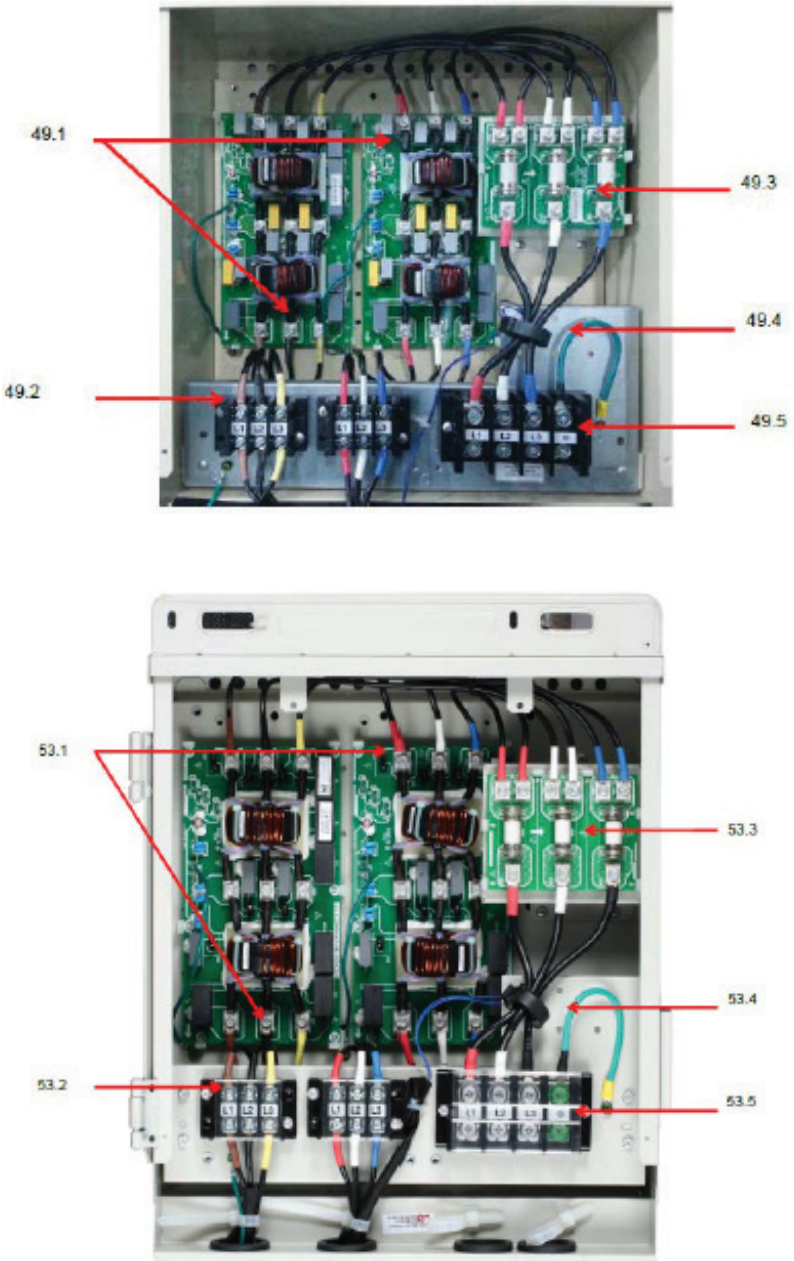

Fig. 57 —Control Board Views

Table 39 —3-Phase Heat Pump Parts Breakdown

NUMBER	PART NAME	QUANTITY	BOM CODE
1	Suction pipe assembly of compressor	1	15427000001923
1.1	Pressure switch	1	17400516000035
1.2	Fusible plug assembly	1	15427000001439
1.3	Solenoid valve assembly	1	15500205000010
1.4	Solenoid valve assembly	1	15500205000031
2	Temperature sensor clipper	6	12900102000005
3	Pipe temperature sensor assembly	1	11201007000252
4	Temperature sensor clipper	1	12900103000008
5	Temperature controller of discharge pipe side	2	17400513000066
6	Discharge pipe assembly of compressor	1	15427000001924
6.1	Needle valve	1	15500301000008
6.2	Pressure sensor	1	11201008000026
6.3	Pressure switch	1	17400516000428
7	4-way valve assembly	1	15427000001736
7.1	Pressure sensor	1	11201008000006
7.2	Needle valve	1	15500301000008
7.3	Pressure release valve	1	15500217000009
7.4	Four way valve	1	15500216000123
8	Pipe temperature sensor assembly	1	11201007000277
9	Connecting pipe assembly	1	15127000005498
10	Oil return capillary assembly	1	15427000000006
11	Oil balance pipe assembly	1	15427000000925
12	Suction service valve assembly	1	15427000002219
12.1	Suction service valve	1	15500204000088
13	Oil balance valve assembly	1	15427000001921
13.1	Oil balance valve	1	15500204000114
14	Needle valve assembly	1	15127000005138
14.1	Needle valve	1	15500301000011
15	Connecting pipe assembly	1	15127000005158
16	Pipe temperature sensor assembly	1	11201007000302
17	Solenoid coil	1	17400302000037
18	Connecting pipe assembly	1	15127000005878
19	Liquid Service Valve Assembly	1	15427000001646
19.1	Liquid Service Valve	1	15500204000130
19.2	Electronic expansion valve	1	15500213000037
19.3	Plate heat exchanger	1	15700101000042
20	Oil separator	1	15500501000005
21	Gas-liquid separator	1	15500501000069
22	Discharge temperature sensor assembly	2	11201007000308
23	Solenoid	2	15500213000156
24	Connecting pipe assembly	1	15127000005538
25	EXV assembly	1	15427000001703
25.1	Solenoid	2	15500213000156
26	Plate to fix pipe	1	12227000001124
27	Fixed plate	1	12227000002772
28	Fixing panel of valve	1	12227000001085
29	Fixed plate	1	12227000004706
30	Seal pad	1	12627000000286
31	Bottom	1	12227000003336
32	Compressor support plate assembly	1	12227000003345
33	DC inverter compressor	1	11102020000002
34	DC inverter compressor	1	11102020000017
35	Fixed plate assembly	1	12227000002336
36	Fan guard	2	12927000000020
37	Cover	1	12227000000419
38	Cover supporter	1	12227000001263
39	Air outlet guide assembly	2	12127000000061

NUMBER	PART NAME	QUANTITY	BOM CODE
40	Rear upper panel	1	12227000000855
41	Propeller fan	1	12100105000383
42	Rear beam assembly	1	12227000001064
43	Cover supporter	2	12227000001212
44	Corner supporter	4	12227000001036
45	Motor supporter assembly	4	12227000001279
46	Rear grille	1	12927000000041
47	Right panel assembly	1	12227000003813
48	Condenser assembly	1	15827000000124
49	Propeller fan	1	12100105000384
50	Brushless DC motor	2	11002015000086
51	Front beam	1	12227000001065
52	E-part box assembly	1	17227000000799
52.1.1	Three phase bridge	2	11201418000002
52.1.2	Inverter module assembly	1	17127000004776
52.2	Filter board assembly	2	17127000001705
52.3	Current detecting board assembly	2	17127000004756
52.4	AC contactor	2	11203502000093
52.5.1	Fan motor module assembly	2	17127000004778
52.6.1	Inverter module assembly	1	17127000004776
52.7	Power transformer	1	11203103000137
52.8	Reactor	1	17400306000303
52.9	Reactor	1	17400306000320
52.10	Main control board assembly	1	17127000005541
52.11	Wire joint	2	17400401000169
52.12	Wiring board brush glue assembly	1	17127000005136
52.13	Power transformer	1	11203103000178
52.14	Terminal block board	1	17127000001689
53	E-part box assembly	1	17227000000802
53.1	Filter board assembly	2	17127000003436
53.2	Wire joint	2	17400401000169
53.3	Insurance tube sheet components	1	17127000001708
53.4	Current transformer	1	17427000000022
53.5	Wire joint, 4p	1	17400401001496
54	Right hanging board	1	12227000004073
55	E-Part box cover	1	12227000006134
56	E-Part box cover	1	12227000006853
57	Supporter assembly	1	12227000005986
58	Top front cover	1	12227000000850
59	Front lower panel	1	12227000000779
60	Pipe temperature sensor assembly	1	11201007001786
61	Left panel assembly	1	12227000006792
62	Temperature sensor clipper	1	12127000000013
63	Room temperature sensor assembly	1	11201007000195
64	Network Controller	1	17211200000381
65	Compressor electric heater	4	17402001000033
66	Network resistor	2	17401204001127
67	Inductor	4	11201106000053

38VMA072HDS6-1, 38VMA096HDS6-1, 38VMA120HDS6-1

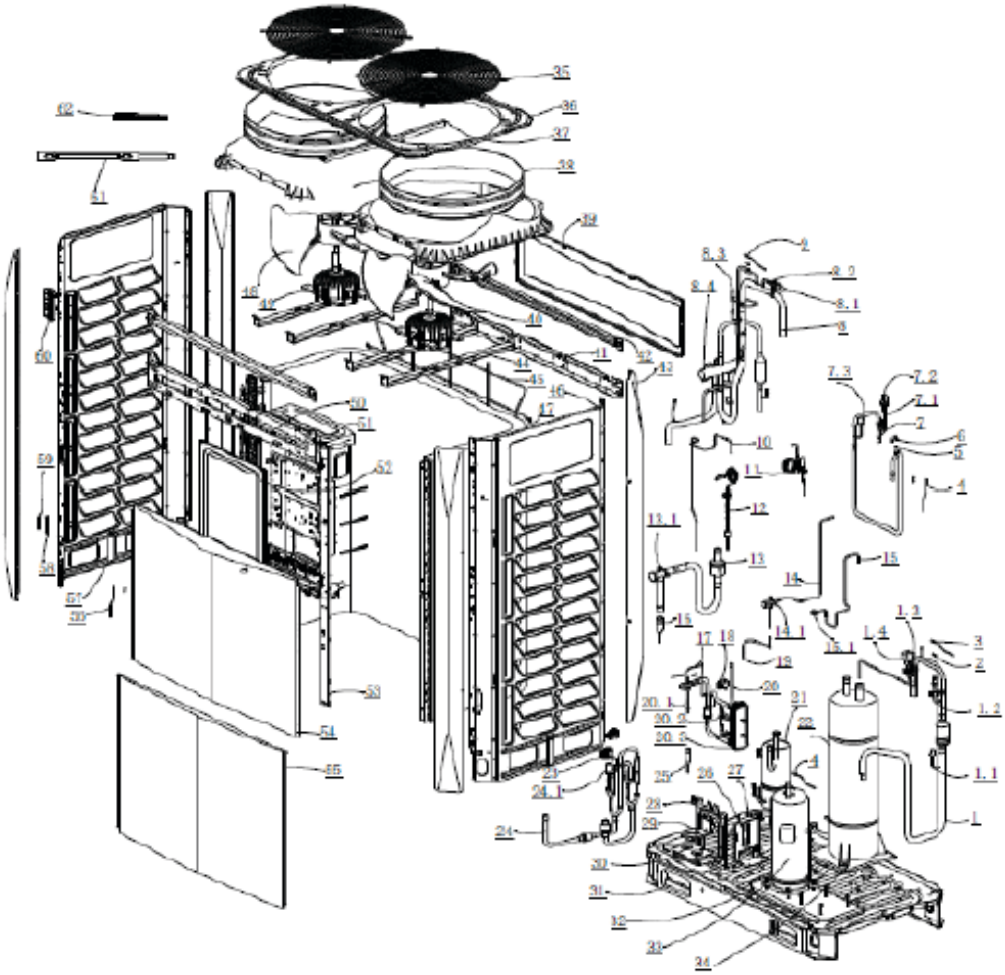

Fig. 58 —3 Phase Heat Pump Exploded View

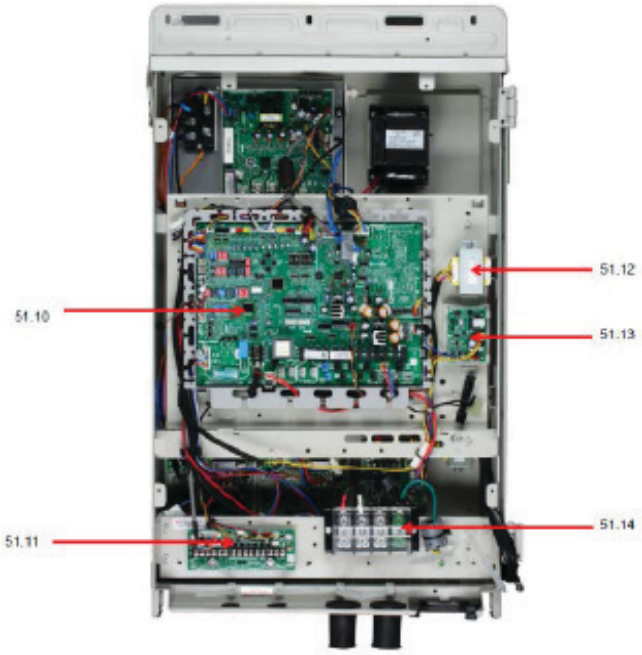

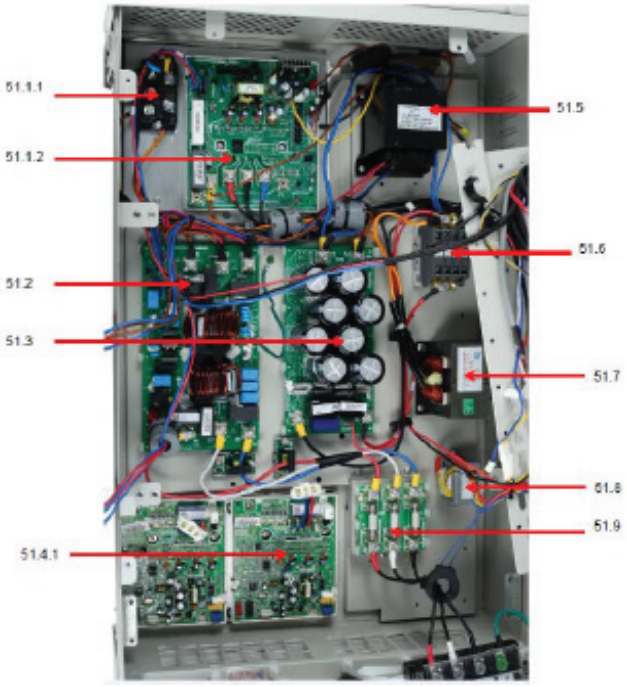

Fig. 59 —Control Board Views

Table 40 —3-Phase Heat Pump Parts Breakdown

NUMBER	PART NAME	QUANTITY	BOM CODE
1	Suction pipe assembly of compressor	1	15427000001920
1.1	Pressure switch	1	17400516000035
1.2	Fusible plug assembly	1	15427000001439
1.3	Solenoid valve assembly	1	15500205000010
1.4	Solenoid valve assembly	1	15500205000031
2	Temperature sensor clipper	6	12900102000005
3	Pipe Temp. sensor assembly	1	11201007000252
4	Discharge temperature sensor assembly	2	11201007000308
5	Temperature sensor clipper	1	12900103000008
6	Temperature controller of discharge pipe side	1	17400513000066
7	Discharge pipe assembly of compressor	1	15427000001919
7.1	Needle valve	1	15500301000008
7.2	Pressure sensor	1	11201008000026
7.3	Pressure switch	1	17400516000428
8	4-way valve assembly	1	15427000001922
8.1	Pressure sensor	1	11201008000006
8.2	Needle valve	1	15500301000008
8.3	Pressure release valve	1	15500217000009
8.4	4-way valve	1	15500216000123
9	Pipe Temp. sensor assembly	1	11201007000277
10	Connecting pipe assembly	1	15127000005498
11	Oil return capillary assembly	1	15427000000282
12	Oil balance pipe assembly	1	15427000000925
13	Low pressure valve assembly	1	15427000002220
13.1	Oil balance valve	1	15500204000088
14	Oil balance valve assembly	1	15427000001921
14.1	Low pressure valve	1	15500204000114
15	Needle valve assembly	1	15127000005138
15.1	Needle valve	1	15500301000011
16	Connection pipe assembly	1	15127000005158
17	Pipe temperature sensor assembly	1	11201007000302
18	Solenoid coil	1	17400302000037
19	Connection pipe assembly	1	15127000005878
20	Liquid service valve assembly	1	15427000001646
20.1	Liquid Service Valve	1	15500204000130
20.2	Solenoid valve	1	15500213000037
20.3	Plate heat exchanger	1	15700101000042
21	Oil separator	1	15500501000005
22	Gas-liquid separator	1	15500501000036
23	Solenoid coil	2	17400302000032
24	EXV assembly	1	15427000000364
24.1	Solenoid	2	15500213000144
25	Connecting pipe assembly	1	15127000005538
26	Fixed plate	1	12227000002772
27	Plate to fix pipe	1	12227000001124
28	Fixing panel of valve	1	12227000001085
29	Fixed plate	1	12227000004706
30	Seal pad	1	12627000000286
31	Bottom	1	12227000003336
32	Compressor support plate assembly	1	12227000003345
33	DC inverter compressor	1	11102020000012
34	Fixed plate assembly	1	12227000002336
35	Fan guard	2	12927000000020
36	Cover	1	12227000000419
37	Cover supporter	1	12227000001263
38	Air outlet guide assembly	2	12127000000061
39	Rear upper panel	1	12227000000855

NUMBER	PART NAME	QUANTITY	BOM CODE
40	Propeller fan	1	12100105000383
41	Rear beam assembly	1	12227000001064
42	Cover supporter	2	12227000001212
43	Corner supporter	4	12227000001036
44	Motor supporter assembly	4	12227000001279
45	Rear grille	1	12927000000041
46	Right panel assembly	1	12227000003813
47	Condenser assembly	1	15827000000124
48	Propeller fan	1	12100105000384
49	Brushless DC motor	2	11002015000316
50	Front beam	1	12227000001065
51	E-part box assembly	1	17227000000798
51.1.1	Three phase bridge	1	11201418000002
51.1.2	Frequency conversion module drive board brush glue components	1	17127000004076
51.2	Outdoor unit power supply board brush glue assembly	1	17127000001685
51.3	Filter board brush glue assembly	1	17127000003956
51.4.1	Fan module drive board brush glue components	2	17127000004069
51.5	Power transformer	1	11203103000148
51.6	AC contactor	1	11203502000058
51.7	Reactance	1	17400306000306
51.8	Power transformer	1	11203103000137
51.9	Fuse	1	17127000003421
51.10	Brush glue components	1	17127000005553
	Brush glue components	1	17127000005588
	Brush glue components	1	17127000005586
51.11	Wiring board brush glue assembly	1	17127000005136
51.12	Power transformer	1	11203103000178
51.13	Intermediate adapter board brush glue assembly	1	17127000001689
51.14	Wire joint, 4p	1	17400401001496
52	E-Part box cover	1	12227000006853
53	Supporter assembly	1	12227000005986
54	Top front cover	1	12227000000850
55	Front lower panel	1	12227000000779
56	Pipe temperature sensor assembly	1	11201007001786
57	Left panel assembly	1	12227000006792
58	Temperature sensor clipper	1	12127000000013
59	Room temperature sensor assembly	1	11201007000195
60	Network Controller	1	17211200000381
61	Compressor electric heater	2	17402001000033
62	Network resistor	2	17401204001127

38VMA144HDS6-1

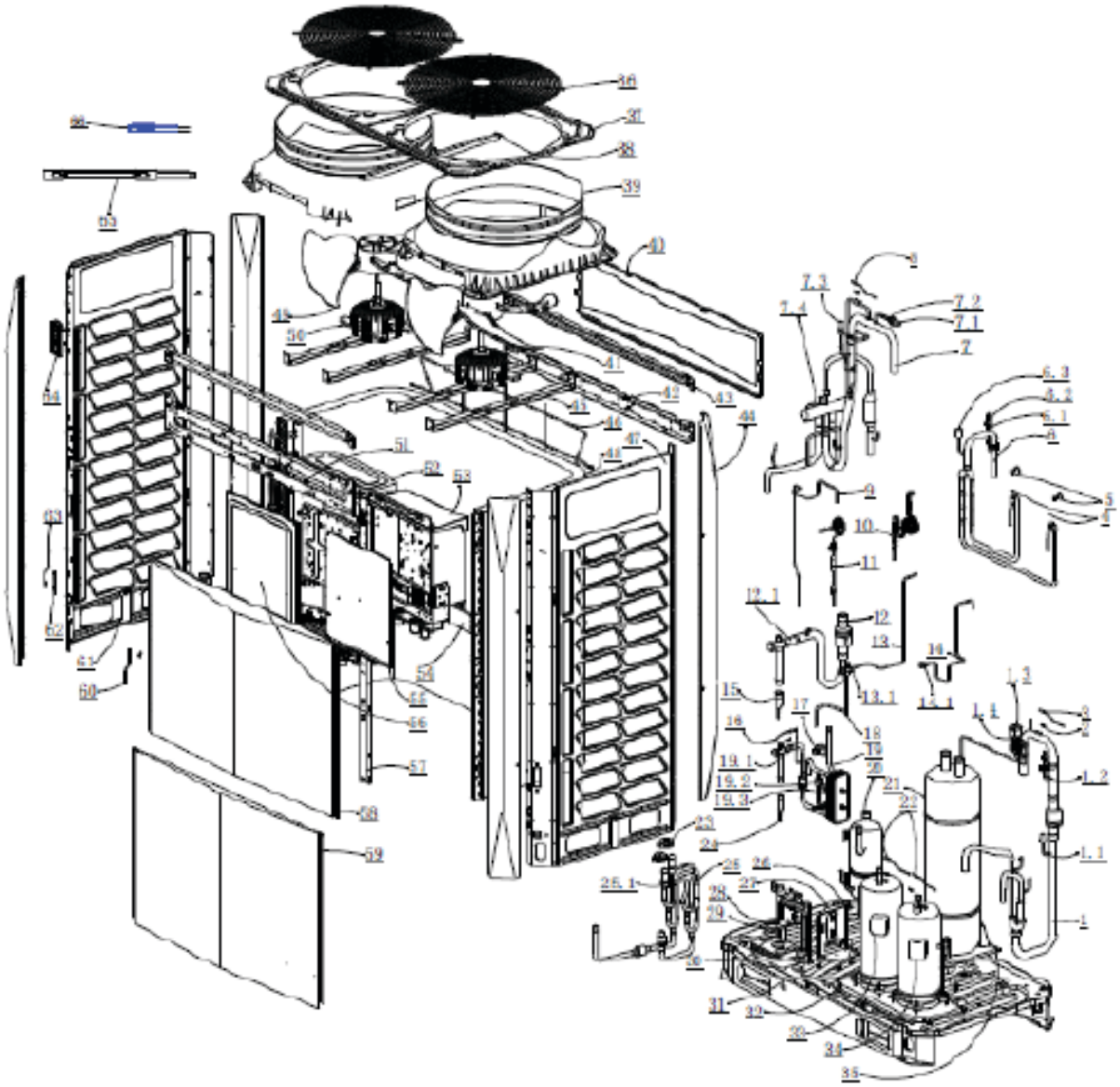

Fig. 60 —3 Phase Heat Pump Exploded View

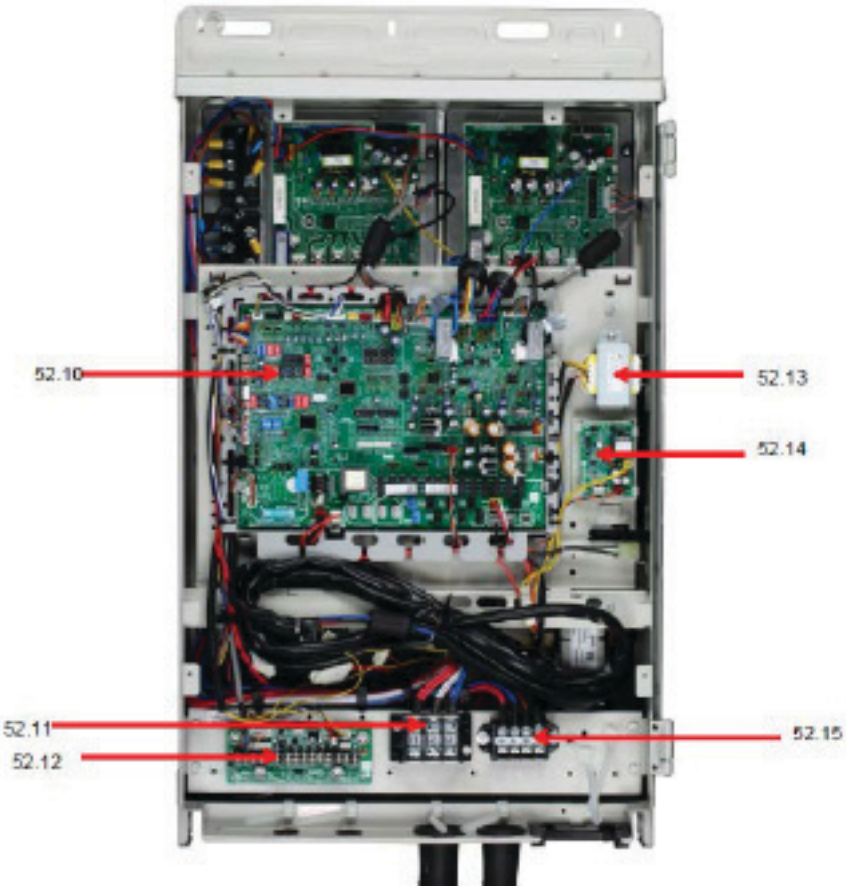
52.10
52.13
52.14
52.11
52.12
52.15

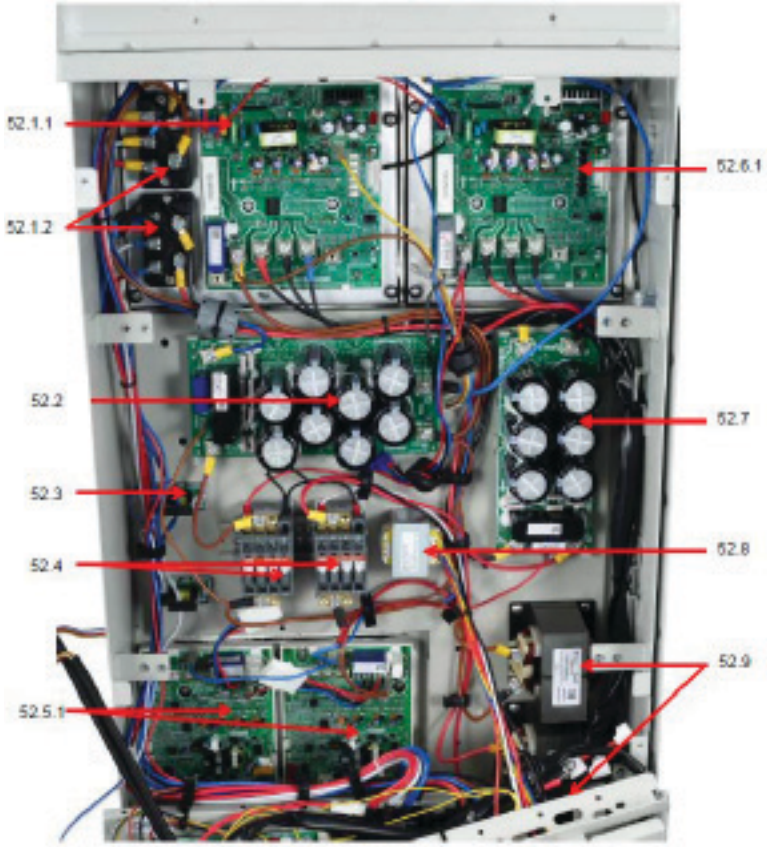
52.1.1
52.6.1
52.1.2
52.2
52.7
52.3
52.4
52.8
52.9
52.5.1

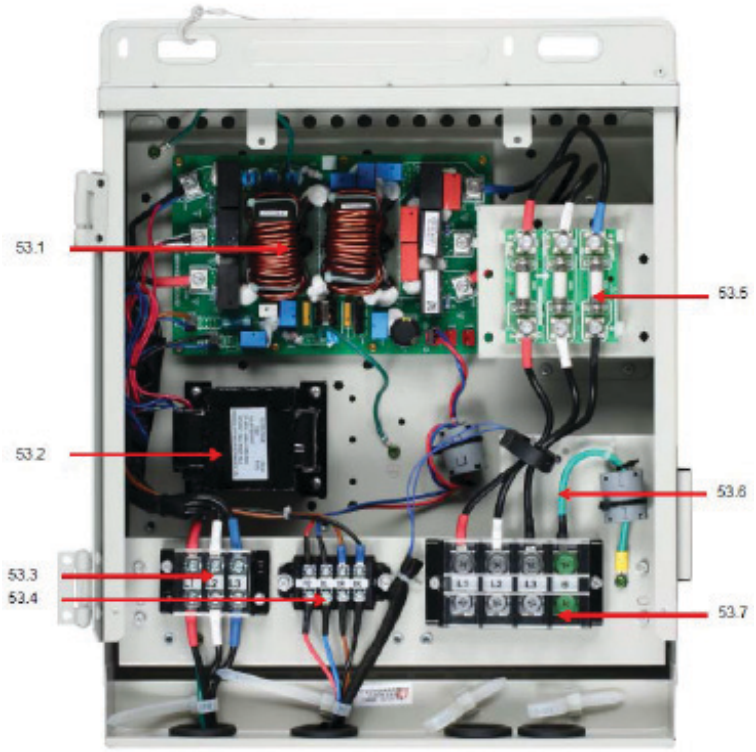

NUMBER	PART NAME	QUANTITY	BOM CODE
1	Suction pipe assembly of compressor	1	15427000001923
1.1	Pressure switch	1	17400516000035
1.2	Fusible plug assembly	1	15427000001439
1.3	Solenoid valve assembly	1	15500205000010
1.4	Solenoid valve assembly	1	15500205000031
2	Temperature sensor clipper	6	12900102000005
3	Pipe temperature sensor assembly	1	11201007000252
4	Temperature sensor clipper	1	12900103000008
5	Temperature controller of discharge pipe side	2	17400513000066
6	Discharge pipe assembly of compressor	1	15427000001924
6.1	Needle valve	1	15500301000008
6.2	Pressure sensor	1	11201008000026
6.3	Pressure switch	1	17400516000428
7	4-way valve assembly	1	15427000001736
7.1	Pressure sensor	1	11201008000006
7.2	Needle valve	1	15500301000008
7.3	Pressure release valve	1	15500217000009
7.4	Four way valve	1	15500216000123
8	Pipe Temp. sensor assembly	1	11201007000277
9	Connecting pipe assembly	1	15127000005498
10	Oil return capillary assembly	1	15427000000006
11	Oil balance pipe assembly	1	15427000000925
12	Suction service valve assembly	1	15427000002219
12.1	Suction service valve	1	15500204000088
13	Oil balance valve assembly	1	15427000001921
13.1	Oil balance valve	1	15500204000114
14	Needle valve assembly	1	15127000005138
14.1	Needle valve	1	15500301000011
15	Connecting pipe assembly	1	15127000005158
16	Pipe temperature sensor assembly	1	11201007000302
17	Solenoid coil	1	17400302000037
18	Connecting pipe assembly	1	15127000005878

NUMBER	PART NAME	QUANTITY	BOM CODE
19	Liquid Service Valve Assembly	1	15427000001646
19.1	Liquid Service Valve	1	15500204000130
19.2	Solenoid valve	1	15500213000037
19.3	Plate heat exchanger	1	15700101000042
20	Oil separator	1	15500501000005
21	Gas-liquid separator	1	15500501000069
22	Discharge Temp. sensor assembly	2	11201007000308
23	Solenoid	2	15500213000156
24	Connecting pipe assembly	1	15127000005538
25	EXV assembly	1	15427000001703
25.1	Electric expansive valve (EEV)	2	15500213000156
26	Plate to fix pipe	1	12227000001124
27	Fixed plate	1	12227000002772
28	Fixing panel of valve	1	12227000001085
29	Fixed plate	1	12227000004706
30	Seal pad	1	12627000000286
31	Bottom	1	12227000003336
32	Compressor support plate assembly	1	12227000003345
33	DC inverter compressor	1	11102020000011
34	DC inverter compressor	1	11102020000003
35	Fixed plate assembly	1	12227000002336
36	Fan guard	2	12927000000020
37	Cover	1	12227000000419
38	Cover supporter	1	12227000001263
39	Air outlet guide assembly	2	12127000000061
40	Rear upper panel	1	12227000000855
41	Propeller fan	1	12100105000383
42	Rear beam assembly	1	12227000001064
43	Cover supporter	2	12227000001212
44	Corner supporter	4	12227000001036
45	Motor supporter assembly	4	12227000001279
46	Rear grille	1	12927000000041
47	Right panel assembly	1	12227000003813
48	Condenser assembly	1	15827000000124
49	Propeller fan	1	12100105000384
50	Brushless DC motor	2	11002015000316
51	Front beam	1	12227000001065
52	E-part box assembly	1	17227000000797
52.1.1	Inverter module assembly	1	17127000004076
52.1.2	Three phase bridge	2	11201418000002
52.2	Filter board brush glue assembly	1	17127000003956
52.3	Current detection board assembly	2	17127000004257
52.4	AC contactor	2	11203502000058
52.5.1	Fan motor module assembly	2	17127000004069
52.6.1	Inverter module assembly	1	17127000004076
52.7	Filter board assembly	1	17127000003957
52.8	Power transformer	1	11203103000137
52.9	Reactor	2	17400306000318
52.10	Main control board assembly	1	17127000005547
52.11	Wire joint	1	17400401000169
52.12	Wiring board brush glue assembly	1	17127000005136
52.13	Power transformer	1	11203103000178
52.14	Terminal block board	1	17127000001689
52.15	Wire joint	1	17400401000190
53	E-part box assembly	1	17227000000801
53.1	Filter board assembly	1	17127000001702
53.2	Power transformer	1	11203103000148
53.3	Wire joint	1	17400401000169

NUMBER	PART NAME	QUANTITY	BOM CODE
53.4	Wire joint	1	17400401000190
53.5	Fuse	3	17127000003421
53.6	Current transformer	1	17427000000022
53.7	Wire joint, 4p	1	17400401001496
54	Right hanging board	1	12227000004073
55	E-Part box cover	1	12227000006134
56	E-Part box cover	1	12227000006853
57	Supporter assembly	1	12227000005986
58	Top front cover	1	12227000000850
59	Front lower panel	1	12227000000779
60	Pipe Temp. sensor assembly	1	11201007001786
61	Left panel assembly	1	12227000006792
62	Temperature sensor clipper	1	12127000000013
63	Room Temp. sensor assembly	1	11201007000195
64	Network Controller	1	17211200000381
65	Compressor electric heater	4	17402001000033
66	Network resistor	2	17401204001127

© 2021 Carrier. All rights reserved.

Manufacturer reserves the right to discontinue, or change at any time, specifications or designs without notice and without incurring obligations.