38VMR072-336
Outdoor Unit for
Variable Refrigerant Flow (VRF) Heat Recovery System

Installation and Maintenance Instructions

CONTENTS

Page

SAFETY CONSIDERATIONS 1
GENERAL 2
DIMENSIONS 10
INSTALLATION 13
Step 1 — Unpack and Inspect Units 13
Step 2 — Position the Unit 15
Step 3 — Connect Refrigerant Piping 23
Step 4 — Pressure and Vacuum Test System . . 26
Step 5 — Adjust Refrigerant Charge 26
Step 6 — Complete Electrical Connections 28
START-UP 34
Snow Blowing Function 36
Pre-Start Check 36
MAINTENANCE 36

SAFETY CONSIDERATIONS

Improper installation, adjustment, alteration, service, maintenance, or use can cause explosion, fire, electrical shock, or other conditions that may cause death, personal injury, or property damage. The qualified installer or agency must use factory-authorized kits or accessories when modifying this product.

Follow all safety codes. Wear safety glasses, protective clothing, and work gloves. Use quenching cloth for brazing operations. Have a fire extinguisher available. Read these instructions thoroughly, and follow all warnings or cautions included in the literature and attached to the unit. Consult local building codes and the current editions of the National Electrical Code (NEC) ANSI/NFPA (American National Standards Institute/National Fire Protection Association) 70. In Canada, refer to the current editions of the Canadian Electrical Code CSA (Canadian Standards Association) C22.1.

Understand the signal words — **DANGER**, **WARNING**, and **CAUTION**. **DANGER** identifies the most serious hazards, which will result in severe personal injury or death. **WARNING** signifies hazards that could result in personal injury or death. **CAUTION** is used to identify unsafe practices, which would result in minor personal injury or product and property damage.

Recognize the safety information. This is the safety-alert symbol (⚠). When this symbol is displayed on the unit and in instructions or manuals, be alert to the potential for personal injury. Installing, starting up, and servicing equipment can be hazardous due to system pressure, electrical components, and equipment location.

⚠ WARNING

Electrical shock can cause personal injury and death. Shut off all power to this equipment during installation. There may be more than one disconnect switch. Tag all disconnect locations to alert others not to restore power until work is completed.

⚠ WARNING

When installing the equipment in a small space, provide adequate measures to avoid refrigerant concentration exceeding safety limits due to refrigerant leak. In case of refrigerant leak during installation, ventilate the space immediately. Failure to follow this procedure may lead to personal injury.

⚠ WARNING

DO NOT USE A TORCH to remove any component. The system contains oil and refrigerant under pressure. To remove a component, wear protective gloves and goggles and proceed as follows:

a. Shut off electrical power to the unit.
b. Recover refrigerant to relieve all pressure from the system using both the high-pressure and low-pressure ports.
c. Traces of vapor should be displaced with nitrogen, and the work area should be well ventilated. Refrigerant in contact with an open flame produces toxic gases.
d. Cut the component connection tubing with a tubing cutter and remove component from the unit. Use a pan to catch any oil that may come out of the lines and as a gage for how much oil to add to the system.
e. Carefully unsweat the remaining tubing stubs when necessary. Oil can ignite when exposed to a torch flame.

Failure to follow these procedures may result in personal injury or death.

⚠ CAUTION

DO NOT re-use compressor oil or any oil that has been exposed to the atmosphere. Dispose of oil per local codes and regulations.

DO NOT leave refrigerant system open to air any longer than the actual time required to service the equipment. Seal circuits being serviced and charge with dry nitrogen to prevent oil contamination when timely repairs cannot be completed. Failure to follow these procedures may result in damage to equipment.

GENERAL

The VRF (variable refrigerant flow) heat recovery system offers a variety of indoor unit types and sizes, ranging from 0.5 to 8 tons. The 38VMR heat recovery outdoor units are available in three different cabinet sizes. The system has the capability to operate between 50% and 150% connected capacity, allowing the system to be tailored to the needs of the customer and the application.

The equipment is initially protected under the manufacturer's standard warranty; however, the warranty is provided under the condition that the steps outlined in this manual for initial inspection, proper installation, regular periodic maintenance, and everyday operation of the unit be followed in detail. This manual should be fully reviewed in advance before initial installation, start-up, and any maintenance. Contact your local sales representative or the factory with any questions BEFORE proceeding.

See Fig. 1 for model number nomenclature. Table 1 shows components that may or may not be used for a particular installation. Tables 2-7 lists physical data for each unit size. Figs. 4-6 show the unit dimensions.

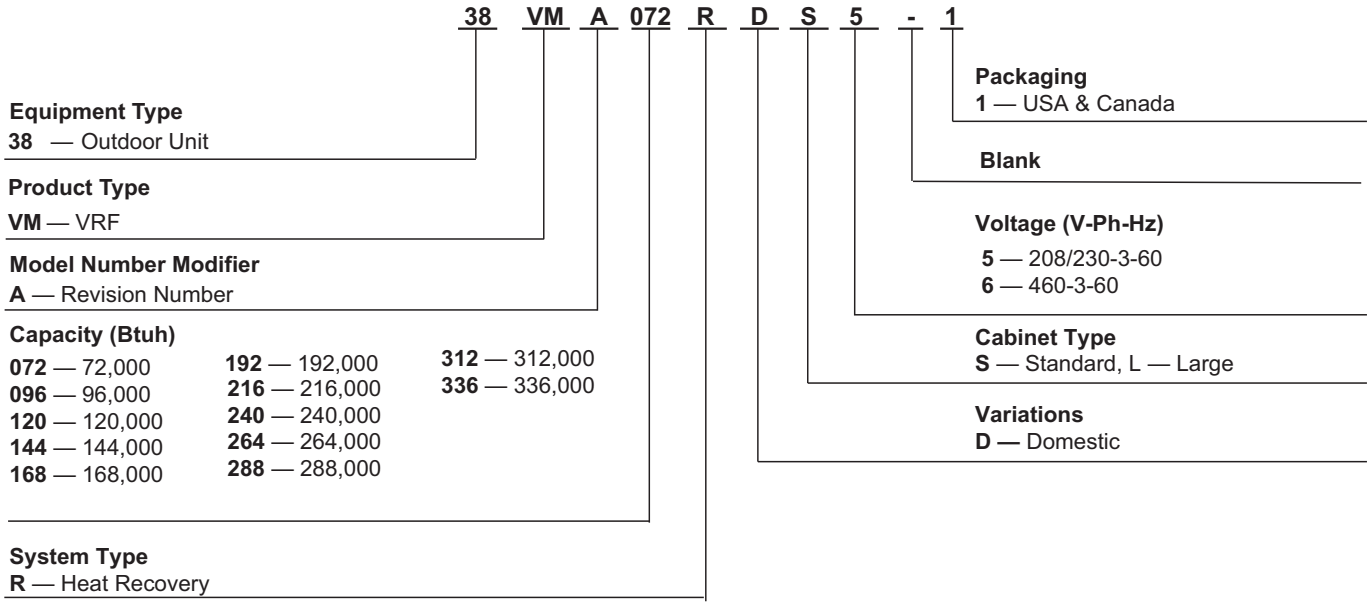

Fig. 1 — Model Number Nomenclature

Table 1 — Components Shipped with Unit

NAME	SHAPE	QUANTITY	FUNCTION
Seal plug		8	For maintenance
Simple wrench		1	For removing the side plate screws
90 degree elbow		2 (Sizes 072 to 120 only)	For outdoor unit and refrigerant pipe connection
Connective pipe accessories		2 (Sizes 144 to 240 only)	
		2	
		2	For MDC and refrigerant pipe connection
Large Outdoor Unit Pressure Test Parts		(Sizes 240L to 336 only) Pressure test pipes (see Figs. 2 and 3)	
Screw bag		1	For mounting pressure test pipes (See Figs. 2 and 3)
Ring terminal		4	For connecting the power and grounding cables

The pressure test pipes and screws are shipped inside the outdoor unit in a bag. Fig. 2 shows the location of this bag inside the front panel of the unit.

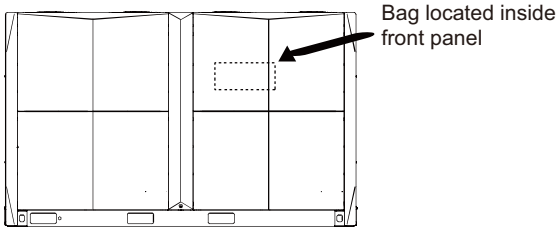

Fig. 2 —Pressure test pipes and screw bag location

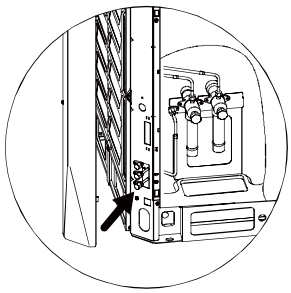

Fig. 3 —Pressure test pipes (Sizes 240L-336)

Table 2 — 38VMR Physical Data

UNIT		072	096	120
NOMINAL TONS (Ton)		6	8	10
POWER SUPPLY (V-Ph-Hz)*		208/230-3-60		
COOLING CAPACITY WITH NON-DUCTED and DUCTED INDOOR UNITS†				
Nominal (kBtu/h)		70.0	96.0	119.7
Rated (kBtu/h)		69.0	92.0	114.0
HEATING CAPACITY WITH NON-DUCTED and DUCTED INDOOR UNITS†				
Nominal (kBtu/h)		80.0	108.0	126.0
Rated (kBtu/h)		77.0	103.0	120.0
ELECTRICAL CHARACTERISTICS WITH NON-DUCTED INDOOR UNITS				
Cooling	Power Consumption (kW)	4.20	6.20	9.30
	IEER (Btu/W)	24.60	23.70	22.80
Heating	Power Consumption (kW)	4.40	7.20	9.50
	COP (W/W)	4.37	3.82	3.45
SCHE (Simultaneous Cooling & Heating Efficiency)		30.00	30.00	30.00
ELECTRICAL CHARACTERISTICS WITH DUCTED INDOOR UNITS				
Cooling	Power Consumption (kW)	5.00	7.10	9.50
	IEER (Btu/W)	24.20	24.30	23.20
Heating	Power Consumption (kW)	5.70	8.00	9.80
	COP (W/W)	3.85	3.63	3.45
SCHE (Simultaneous Cooling & Heating Efficiency)		27.40	27.70	26.70
UNIT DIMENSIONS (W x H x D) (in.)		52-3/4 x 64-3/8 x 31-1/8		
UNIT NET WEIGHT (lb)		672		
COMPRESSOR				
Type		INVERTER-driven Scroll Hermetic		
Motor Output (kW)		23.25		
FAN UNIT				
Air Volume (cfm)		6900	7600	8100
Motor Output (W)		180 x 2	210 x 2	250 x 2
CONDENSER COIL	Coil Qty.	1		
	Ft^2	30-1/2		
	Rows	3		
	FPI	17		
REFRIGERANT SHIPPING CHARGE (lb)††		26.5		
REFRIGERANT CONNECTING PORT DIAMETER				
Gas Side (in.)		3/4	7/8	1-1/8
Liquid Side (in.)		5/8	3/4	
OPERATION TEMPERATURE RANGE				
Cooling (F db)		5~125		
Heating (F wb)		-13~64		
MAX ESP (in. wg)		0.24 Max.		
MAX NUMBER OF CONNECTED INDOOR UNITS		15	20	24
MAXIMUM CAPACITY OF COMBINED INDOOR UNITS		50% to 150%		
SOUND PRESSURE LEVEL (db(A))†††		58.40	61.70	62.70

LEGEND
COP — Coefficient of Performance
db — Dry Bulb
IEER — Integrated Energy Efficiency Ratio
ESP — External Static Pressure
wb — Wet Bulb

* The source of voltage must not fluctuate more than ± 10%.
† Rated conditions:
Cooling: Indoor air temperature 80°F dry bulb / 67°F wet bulb, Outdoor air temperature 95°F dry bulb.
Heating: Indoor air temperature 70°F dry bulb, Outdoor air temperature 47°F dry bulb / 43°F wet bulb.
†† The amount does not consider extra piping length. Refrigerant must be added on site in accordance with the actual piping length.
††† These values, measured in anechoic chamber, at a point 1 m in front of the unit at a height of 1.4 m.
During actual operation, these values are normally somewhat higher as a result of ambient conditions.

Table 3 — 38VMR Physical Data

UNIT		144	168	192	216	240RDS
NOMINAL TONS (Ton)		12	14	16	18	20
POWER SUPPLY (V-Ph-Hz)*		208/230-3-60				
COOLING CAPACITY WITH NON-DUCTED and DUCTED INDOOR UNITS†						
Nominal (kBtu/h)		142.8	165.9	191.1	214.2	231.0
Rated (kBtu/h)		136.0	158.0	182.0	204.0	220.0
HEATING CAPACITY WITH NON-DUCTED and DUCTED INDOOR UNITS†						
Nominal (kBtu/h)		160.0	188.0	215.0	243.0	257.0
Rated (kBtu/h)		150.0	180.0	204.0	222.0	236.0
ELECTRICAL CHARACTERISTICS WITH NON-DUCTED INDOOR UNITS						
Cooling	Power Consumption (kW)	9.00	11.90	14.70	16.80	19.70
	IEER (Btu/W)	24.40	23.10	23.90	23.00	22.40
Heating	Power Consumption (kW)	9.60	13.30	16.20	18.00	20.20
	COP (W/W)	3.98	3.59	3.38	3.34	3.20
SCHE (Simultaneous Cooling & Heating Efficiency)		26.50	27.00	28.20	27.30	27.00
ELECTRICAL CHARACTERISTICS WITH DUCTED INDOOR UNITS						
Cooling	Power Consumption (kW)	10.60	13.30	15.90	17.90	20.40
	IEER (Btu/W)	24.00	22.90	23.60	21.70	21.00
Heating	Power Consumption (kW)	11.80	14.40	17.40	19.10	20.90
	COP (W/W)	3.60	3.54	3.33	3.29	3.20
SCHE (Simultaneous Cooling & Heating Efficiency)		26.50	25.20	25.50	26.50	26.50
UNIT DIMENSIONS (W x H x D) (in.)		78-3/8 x 64-3/8 x 31-1/8				
UNIT NET WEIGHT (lb)		1137				
COMPRESSOR						
Type		INVERTER-Driven Scroll Hermetic				
Motor Output (kW)		23.25				
FAN UNIT						
Air Volume (cfm)		10,100	10,100	11,300	12,300	12,300
Motor Output (W)		260 x 2	260 x 2	340 x 2	440 x 2	440 x 2
CONDENSER COIL	Coil Qty.	2				
	Ft^2	26				
	Rows	3				
	FPI	17				
REFRIGERANT SHIPPING CHARGE (lb)††		44.20				
REFRIGERANT CONNECTING PORT DIAMETER						
Gas Side (in.)		1-1/8				1-3/8
Liquid Side (in.)		7/8			1-1/8	
OPERATION TEMPERATURE RANGE						
Cooling (F db)		5~125				
Heating (F wb)		-13~64				
MAX ESP (in. wg)		0.24 Max.				
MAX NUMBER OF CONNECTED INDOOR UNITS		29	34	39	44	49
MAXIMUM CAPACITY OF COMBINED INDOOR UNITS		50% to 150%				
SOUND PRESSURE LEVEL (db(A)†††		63.30	63.30	64.90	67.10	67.10

LEGEND
COP — Coefficient of Performance
db — Dry Bulb
IEER — Integrated Energy Efficiency Ratio
ESP — External Static Pressure
wb — Wet Bulb

* The source of voltage must not fluctuate more than ± 10%.
† Rated conditions:
Cooling: Indoor air temperature 80°F dry bulb / 67°F wet bulb, Outdoor air temperature 95°F dry bulb.
Heating: Indoor air temperature 70°F dry bulb, Outdoor air temperature 47°F dry bulb / 43°F wet bulb.
†† The amount does not consider extra piping length. Refrigerant must be added on site in accordance with the actual piping length.
††† These values, measured in anechoic chamber, at a point 1 m in front of the unit at a height of 1.4 m.
During actual operation, these values are normally somewhat higher as a result of ambient conditions.

Table 4 — 38VMR Physical Data

UNIT		240RDL	264	288	312	336
NOMINAL TONS (Ton)		20	22	24	26	28
POWER SUPPLY (V-Ph-Hz)*		208/230-3-60				
COOLING CAPACITY WITH NON-DUCTED and DUCTED INDOOR UNITS†						
Nominal (kBtu/h)		239.4	260.4	287.7	310.8	323.4
Rated (kBtu/h)		228.0	248.0	274.0	296.0	308.0
HEATING CAPACITY WITH NON-DUCTED and DUCTED INDOOR UNITS†						
Nominal (kBtu/h)		270.0	295.0	323.0	343.0	353.0
Rated (kBtu/h)		256.0	282.0	298.0	314.0	322.0
ELECTRICAL CHARACTERISTICS WITH NON-DUCTED INDOOR UNITS						
Cooling	Power Consumption (kW)	20.36	23.18	26.35	31.83	33.12
	IEER (Btu/W)	22.40	22.00	21.00	20.20	19.50
Heating	Power Consumption (kW)	20.22	23.48	25.84	28.85	29.58
	COP (W/W)	3.71	3.52	3.38	3.20	3.20
SCHE (Simultaneous Cooling & Heating Efficiency)		30.00	29.60	29.30	28.50	28.00
ELECTRICAL CHARACTERISTICS WITH DUCTED INDOOR UNITS						
Cooling	Power Consumption (kW)	20.73	23.18	27.96	31.16	33.12
	IEER (Btu/W)	21.10	21.00	20.50	19.80	19.00
Heating	Power Consumption (kW)	21.02	23.68	25.54	27.39	29.22
	COP (W/W)	3.57	3.49	3.42	3.36	3.23
SCHE (Simultaneous Cooling & Heating Efficiency)		28.0	27.5	27.0	26.50	25.50
UNIT DIMENSIONS (W x H x D) (in.)		105-7/8 x 64-3/8 x 31-1/8				
UNIT NET WEIGHT (lb)		1627				
COMPRESSOR						
Type		INVERTER-Driven Scroll Hermetic				
Motor Output (kW)		23.25				
FAN UNIT						
Air Volume (cfm)		14,500	15,500	15,500	16,500	16,500
Motor Output (W)		225 x 4	265 x 4	265 x 4	310 x 4	310 x 4
CONDENSER COIL	Coil Qty.	2				
	Ft^2	28-3/4				
	Rows	3				
	FPI	16				
REFRIGERANT SHIPPING CHARGE (lb)††		77.20				
REFRIGERANT CONNECTING PORT DIAMETER						
Gas Side (in.)		1-3/8			1-5/8	
Liquid Side (in.)		1-1/8				
OPERATION TEMPERATURE RANGE						
Cooling (F db)		5~125				
Heating (F wb)		-13~64				
MAX ESP (in. wg)		0.24 Max.				
MAX NUMBER OF CONNECTED INDOOR UNITS		49	54	59	64	64
MAXIMUM CAPACITY OF COMBINED INDOOR UNITS		50% to 150%				
SOUND PRESSURE LEVEL (db(A)†††		63.90	64.80	64.80	66.40	67.20

LEGEND
COP — Coefficient of Performance
db — Dry Bulb
IEER — Integrated Energy Efficiency Ratio
ESP — External Static Pressure
wb — Wet Bulb

* The source of voltage must not fluctuate more than ± 10%.
† Rated conditions:
Cooling: Indoor air temperature 80°F dry bulb / 67°F wet bulb, Outdoor air temperature 95°F dry bulb.
Heating: Indoor air temperature 70°F dry bulb, Outdoor air temperature 47°F dry bulb / 43°F wet bulb.
†† The amount does not consider extra piping length. Refrigerant must be added on site in accordance with the actual piping length.
††† These values, measured in anechoic chamber, at a point 1 m in front of the unit at a height of 1.4 m.
During actual operation, these values are normally somewhat higher as a result of ambient conditions.

Table 5 — 38VMR Physical Data

UNIT		072	096	120
NOMINAL TONS (Ton)		6	8	10
POWER SUPPLY (V-Ph-Hz)*		460-3-60		
COOLING CAPACITY WITH NON-DUCTED AND DUCTED INDOOR UNITS†				
Nominal (kBtu/h)		72.0	96.0	119.7
Rated (kBtu/h)		69.0	92.0	114.0
HEATING CAPACITY WITH NON-DUCTED AND DUCTED INDOOR UNITS†				
Nominal (kBtu/h)		80.0	108.0	126.0
Rated (kBtu/h)		77.0	103.0	120.0
ELECTRICAL CHARACTERISTICS WITH NON-DUCTED INDOOR UNITS				
Cooling	Power Consumption (kW)	4.20	6.20	9.30
	IEER (Btu/W)	24.60	23.70	22.80
Heating	Power Consumption (kW)	4.40	7.20	9.50
SCHE (Simultaneous Cooling & Heating Efficiency)		30.00		
ELECTRICAL CHARACTERISTICS WITH DUCTED INDOOR UNITS				
Cooling	Power Consumption (kW)	5.00	7.10	9.60
	IEER (Btu/W)	24.20	24.30	23.20
Heating	Power Consumption (kW)	5.70	8.00	9.80
SCHE (Simultaneous Cooling & Heating Efficiency)		27.40	27.70	26.70
UNIT DIMENSIONS (W x H x D) (in.)		52-3/4 x 64-3/8 x 31-1/8		
UNIT NET WEIGHT (lb)		672		
COMPRESSOR				
Type		INVERTER-driven Scroll Hermetic		
Motor Output (kW)		23.25		
FAN UNIT				
Air Volume (cfm)		6900	7600	8100
Motor Output (W)		180 x 2	210 x 2	250 x 2
CONDENSER COIL	Coil Qty.	1		
	Ft^2	30-1/2		
	Rows	3		
	FPI	17		
REFRIGERANT SHIPPING CHARGE (lb)††		26.50		
REFRIGERANT CONNECTING PORT DIAMETER				
Gas Side (in.)		3/4	7/8	1-1/8
Liquid Side (in.)		5/8	3/4	
OPERATION TEMPERATURE RANGE				
Cooling (F db)		5~125		
Heating (F wb)		-13~64		
MAX ESP (in. wg)		0.24 Max.		
MAX NUMBER OF CONNECTED INDOOR UNITS		15	20	24
MAXIMUM CAPACITY OF COMBINED INDOOR UNITS		50%~150%		
SOUND PRESSURE LEVEL (db(A)†††		58.40	61.70	62.70

LEGEND
COP — Coefficient of Performance
db — Dry Bulb
IEER — Integrated Energy Efficiency Ratio
ESP — External Static Pressure
wb — Wet Bulb

* The source of voltage must not fluctuate more than ± 10%.
† Rated conditions:
Cooling: Indoor air temperature 80°F dry bulb / 67°F wet bulb, Outdoor air temperature 95°F dry bulb.
Heating: Indoor air temperature 70°F dry bulb, Outdoor air temperature 47°F dry bulb / 43°F wet bulb.
†† The amount does not consider extra piping length. Refrigerant must be added on site in accordance with the actual piping length.
††† These values, measured in anechoic chamber, at a point 1 m in front of the unit at a height of 1.4 m.
During actual operation, these values are normally somewhat higher as a result of ambient conditions.

Table 6 — 38VMR Physical Data

UNIT		144	168	192	216	240RDS
NOMINAL TONS (Ton)		12	14	16	18	20
POWER SUPPLY (V-Ph-Hz)*		460-3-60				
COOLING CAPACITY WITH NON-DUCTED AND DUCTED INDOOR UNITS†						
Nominal (kBtu/h)		142.8	165.9	191.1	214.2	231.0
Rated (kBtu/h)		136.0	158.0	182.0	204.0	220.0
HEATING CAPACITY WITH NON-DUCTED AND DUCTED INDOOR UNITS†						
Nominal (kBtu/h)		160.0	188.0	215.0	243.0	257.0
Rated (kBtu/h)		150.0	180.0	204.0	222.0	236.0
ELECTRICAL CHARACTERISTICS WITH NON-DUCTED INDOOR UNITS						
Cooling	Power Consumption (kW)	9.00	11.90	14.70	16.80	19.70
	IEER (Btu/W)	24.40	23.10	23.90	23.00	22.40
Heating	Power Consumption (kW)	9.60	13.30	16.20	18.00	20.20
SCHE (Simultaneous Cooling & Heating Efficiency)		26.50	27.00	28.20	27.30	27.00
ELECTRICAL CHARACTERISTICS WITH DUCTED INDOOR UNITS						
Cooling	Power Consumption (kW)	10.60	13.30	15.90	17.90	20.40
	IEER (Btu/W)	24.00	22.90	23.60	21.70	21.00
Heating	Power Consumption (kW)	11.80	14.40	17.40	19.10	20.90
SCHE (Simultaneous Cooling & Heating Efficiency)		26.50	25.20	25.50	26.50	26.50
UNIT DIMENSIONS (W x H x D) (in.)		78-3/8 x 64-3/8 x 31-1/8				
UNIT NET WEIGHT (lb)		1137				
COMPRESSOR						
Type		INVERTER-driven Scroll Hermetic				
Motor Output (kW)		23.25				
FAN UNIT						
Air Volume (cfm)		10,100	10,100	11,300	12,300	12,300
Motor Output (W)		260 x 2	260 x 2	340 x 2	440 x 2	440 x 2
CONDENSER COIL	Coil Qty.	2				
	Ft^2	26				
	Rows	3				
	FPI	17				
REFRIGERANT SHIPPING CHARGE (lb)††		44.20				
REFRIGERANT CONNECTING PORT DIAMETER						
Gas Side (in.)		1-1/8				1-3/8
Liquid Side (in.)		7/8			1-1/8	
OPERATION TEMPERATURE RANGE						
Cooling (F db)		5~125				
Heating (F wb)		-13~64				
MAX ESP (in. wg)		0.24 Max.				
MAX NUMBER OF CONNECTED INDOOR UNITS		29	34	39	44	49
MAXIMUM CAPACITY OF COMBINED INDOOR UNITS		50%~150%				
SOUND PRESSURE LEVEL (db(A)†††		63.30	63.30	64.90	67.10	67.10

LEGEND
COP — Coefficient of Performance
db — Dry Bulb
IEER — Integrated Energy Efficiency Ratio
ESP — External Static Pressure
wb — Wet Bulb

* The source of voltage must not fluctuate more than ± 10%.
† Rated conditions:
Cooling: Indoor air temperature 80°F dry bulb / 67°F wet bulb, Outdoor air temperature 95°F dry bulb.
Heating: Indoor air temperature 70°F dry bulb, Outdoor air temperature 47°F dry bulb / 43°F wet bulb.
†† The amount does not consider extra piping length. Refrigerant must be added on site in accordance with the actual piping length.
††† These values, measured in anechoic chamber, at a point 1 m in front of the unit at a height of 1.4 m.
During actual operation, these values are normally somewhat higher as a result of ambient conditions.

Table 7 — 38VMR Physical Data

UNIT		240RDL	264	288	312	336
NOMINAL TONS (Ton)		20	22	24	26	28
POWER SUPPLY (V-Ph-Hz)*		460-3-60				
COOLING CAPACITY WITH NON-DUCTED AND DUCTED INDOOR UNITS†						
Nominal (kBtu/h)		239.4	260.4	287.7	310.8	323.4
Rated (kBtu/h)		228.0	248.0	274.0	296.0	308.0
HEATING CAPACITY WITH NON-DUCTED AND DUCTED INDOOR UNITS†						
Nominal (kBtu/h)		270.0	295.0	323.0	343.0	357.0
Rated (kBtu/h)		256.0	282.0	298.0	314.0	322.0
ELECTRICAL CHARACTERISTICS WITH NON-DUCTED INDOOR UNITS						
Cooling	Power Consumption (kW)	20.36	23.18	26.35	31.83	33.12
	IEER (Btu/W)	22.40	22.00	21.00	20.20	19.50
Heating	Power Consumption (kW)	20.22	23.48	25.84	28.85	29.58
SCHE (Simultaneous Cooling & Heating Efficiency)		30.00	29.60	29.30	28.50	28.00
ELECTRICAL CHARACTERISTICS WITH DUCTED INDOOR UNITS						
Cooling	Power Consumption (kW)	20.73	23.94	27.96	31.16	33.23
	IEER (Btu/W)	21.10	21.00	20.50	19.80	19.00
Heating	Power Consumption (kW)	21.02	23.68	25.54	27.39	29.22
SCHE (Simultaneous Cooling & Heating Efficiency)		28.00	27.50	27.00	26.50	25.50
UNIT DIMENSIONS (W x H x D) (in.)		105-7/8 x 64-3/8 x 31-1/8				
UNIT NET WEIGHT (lb)		1627				
COMPRESSOR						
Type		INVERTER-driven Scroll Hermetic				
Motor Output (kW)		23.25				
FAN UNIT						
Air Volume (cfm)		14,500	15,500	15,500	16,500	16,500
Motor Output (W)		225 x 4	280 x 4	280 x 4	330 x 4	330 x 4
CONDENSER COIL	Coil Qty.	2				
	Ft^2	28-3/4				
	Rows	3				
	FPI	16				
REFRIGERANT SHIPPING CHARGE (lb)††		77.20				
REFRIGERANT CONNECTING PORT DIAMETER						
Gas Side (in.)		1-3/8			1-5/8	
Liquid Side (in.)		1-1/8				
OPERATION TEMPERATURE RANGE						
Cooling (F db)		5~125				
Heating (F wb)		-13~64				
MAX ESP (in. wg)		0.24 Max.				
MAX NUMBER OF CONNECTED INDOOR UNITS		49	54	59	64	64
MAXIMUM CAPACITY OF COMBINED INDOOR UNITS		50%~150%				
SOUND PRESSURE LEVEL (db(A)†††		64.00	65.80	65.80	66.70	67.20

LEGEND
COP — Coefficient of Performance
db — Dry Bulb
IEER — Integrated Energy Efficiency Ratio
ESP — External Static Pressure
wb — Wet Bulb

* The source of voltage must not fluctuate more than ± 10%.
† Rated conditions:
Cooling: Indoor air temperature 80°F dry bulb / 67°F wet bulb, Outdoor air temperature 95°F dry bulb.
Heating: Indoor air temperature 70°F dry bulb, Outdoor air temperature 47°F dry bulb / 43°F wet bulb.
†† The amount does not consider extra piping length. Refrigerant must be added on site in accordance with the actual piping length.
††† These values, measured in anechoic chamber, at a point 1 m in front of the unit at a height of 1.4 m.
During actual operation, these values are normally somewhat higher as a result of ambient conditions.

DIMENSIONS

NOTE: All dimensions are in inches.

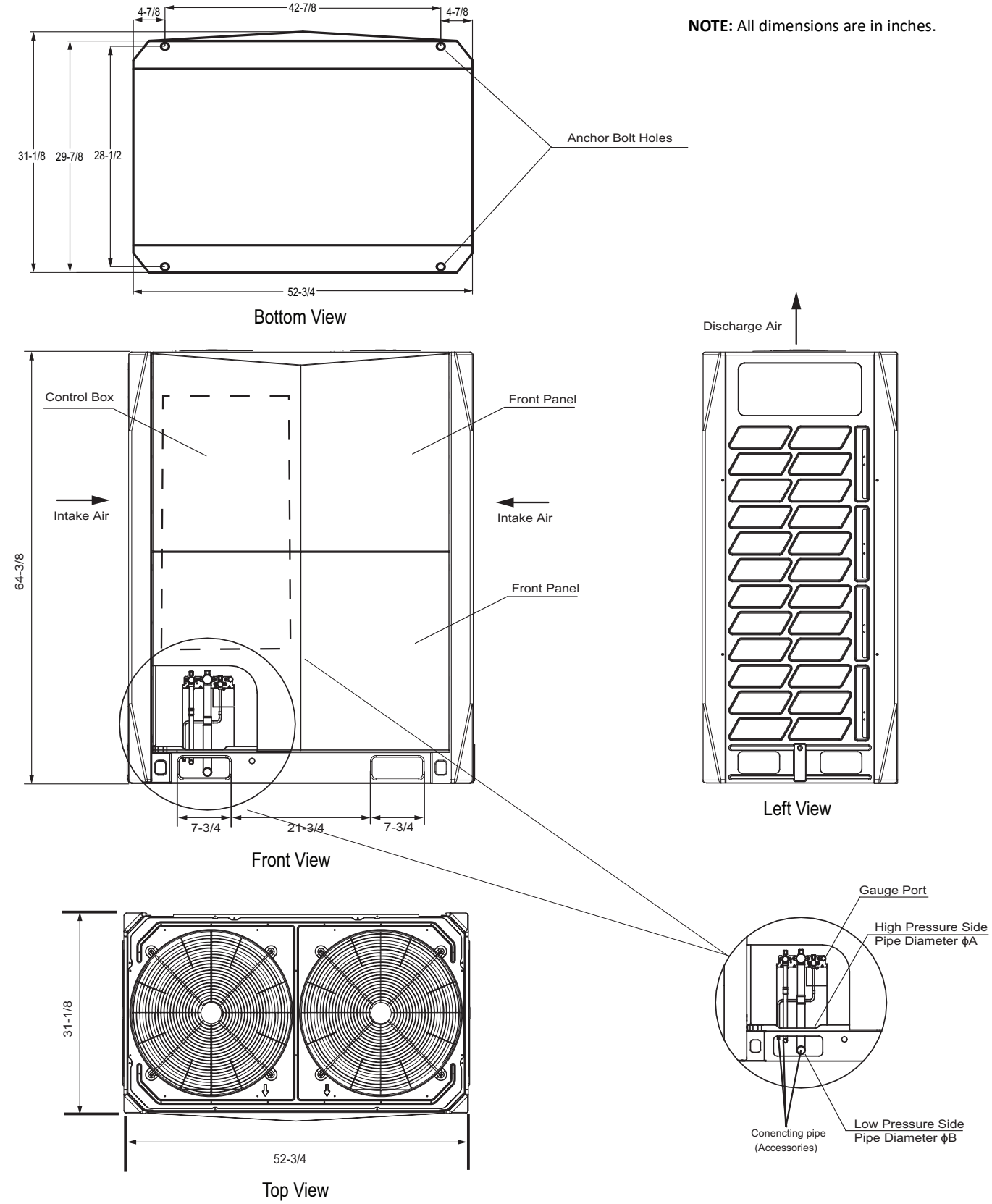

Fig. 4 —38VMR Dimensions (6 - 10 Tons)

Table 8 — Dimensions (in inches)

MODEL	ϕA	ϕB
072	5/8	3/4
096	3/4	7/8
120	3/4	1-1/8

DIMENSIONS (CONT.)

NOTE: All dimensions are in inches.

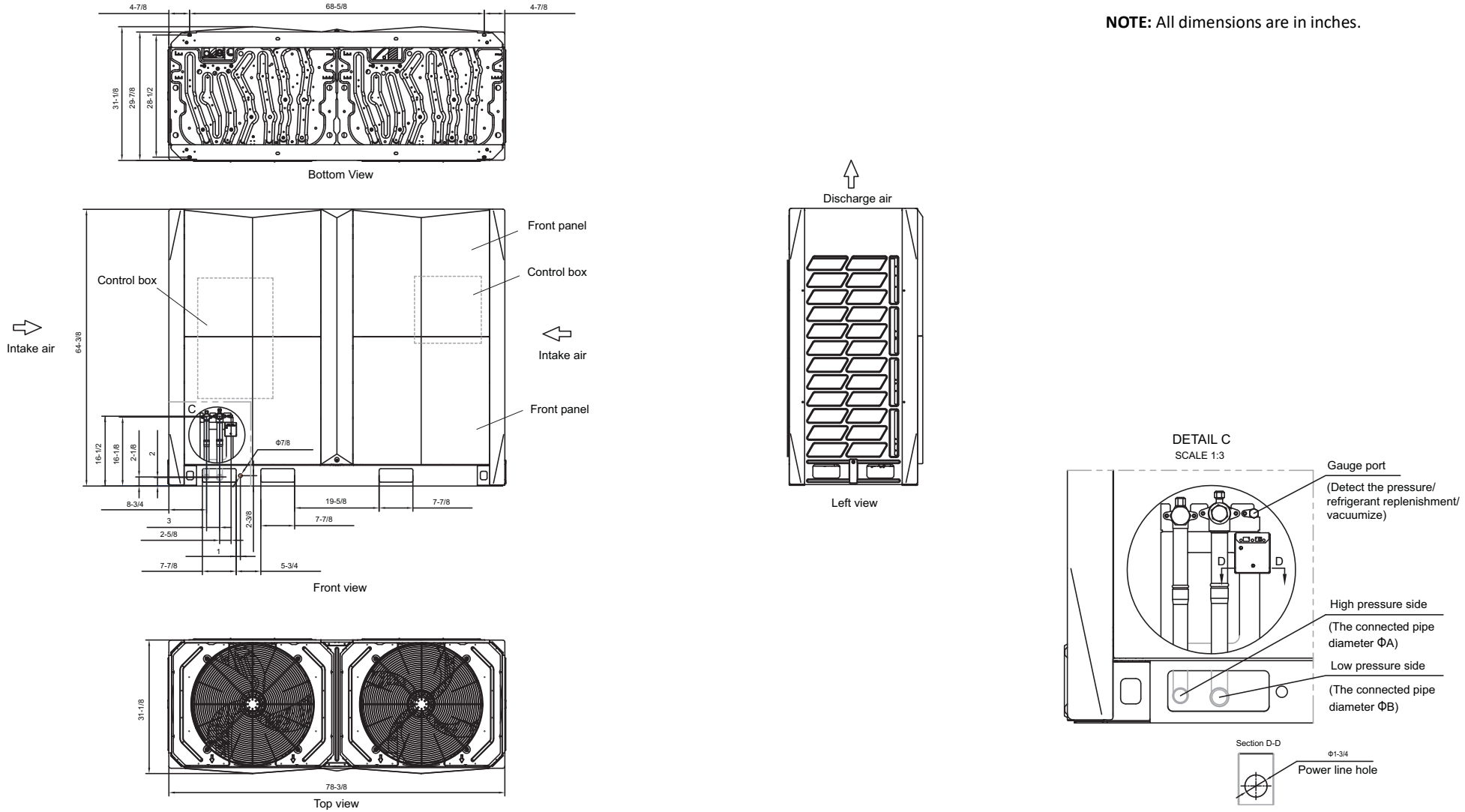

Fig. 5 —38VMR Dimensions (12 - 20S Tons)

Table 9 — Dimensions (in inches)

MODEL	ϕA	ϕB
144	7/8	1-1/8
168	7/8	1-1/8
192	7/8	1-1/8
216	1-1/8	1-1/8
240	1-1/8	1-3/8

DIMENSIONS (CONT.)

NOTE: All dimensions are in inches.

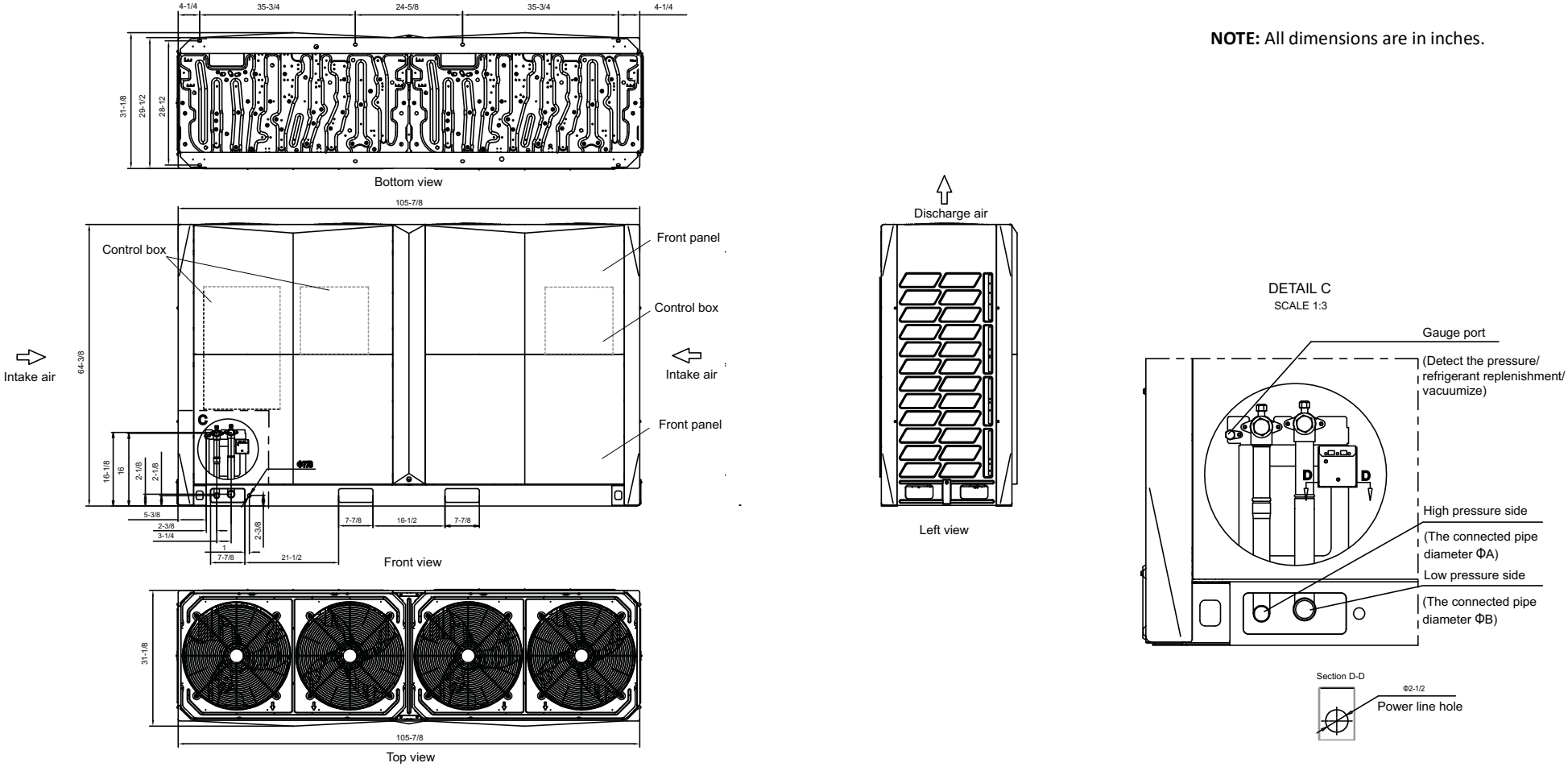

Fig. 6 —38VMR Dimensions (20L-28 Tons)

Table 10 — Dimensions (in inches)

MODEL	ϕA	ϕB
240	1-1/8	1-3/8
264	1-1/8	1-3/8
288	1-1/8	1-3/8
312	1-1/8	1-5/8
336	1-1/8	1-5/8

INSTALLATION

Step 1 — Unpack and Inspect Units — Units are packaged for shipment to avoid damage during normal transit and handling. It is the receiving party's responsibility to inspect the equipment upon arrival. Any obvious damage to the carton and/or its contents should be reported on the bill of lading and a claim should be filed with the transportation company and the factory. The unit should always be stored in a dry place and in the proper orientation as marked on the carton.

After determining the condition of the unit exterior, carefully remove the packaging and inspect for hidden damage. Check to ensure that items such as thermostats and controllers are accounted for whether packaged separately or shipped at a later date. Any hidden damage should be recorded, a claim should be filed with the transportation company, and the factory should be notified. In the event a claim for shipping damage is filed, the unit, shipping carton, and all packing must be retained for physical inspection by the transportation company. All units should be stored in the factory shipping carton with internal packaging in place until installation.

PROTECTING UNITS FROM DAMAGE — Do not apply force or pressure to the coil, piping, or drain stub-outs during handling. All units should be handled using the proper forklift holes or lifting locations.

The unit must always be properly supported. Temporary supports used during installation or service must be adequate to hold the unit securely. To maintain warranty, protect units against hostile environments, theft, vandalism, and debris on job site. Do not allow foreign material to fall into the unit. Failure to do so may have serious adverse effects on unit operation. Failure of any unit caused by deposits of foreign material inside the unit will not be covered by the manufacturer's warranty. Some units and/or job conditions may require some form of temporary covering during construction.

PREPARING JOB SITE FOR UNIT INSTALLATION —

To save time and to reduce the possibility of costly errors, set up a complete sample installation in a typical location at the job-site. Check all critical dimensions such as pipe and wire connection requirements. Refer to job drawings and product dimension drawings as required. Instruct all trades in their parts of the installation. Units must be installed in compliance with all applicable local code requirements.

IDENTIFYING AND PREPARING UNITS — Be sure the power requirements match the available power source. Refer to the unit nameplate and the wiring diagram.

In addition:

- Check all tags on unit to determine if shipping screws are to be removed. Remove screws as directed.
- Rotate the fan blade by hand to ensure that the fan is unrestricted and can rotate freely. Check for shipping damage and fan obstructions.

PRESSURE TEST PIPE CONNECTIONS (SIZES 240L - 336 ONLY) —

1. Use screws provided in Screw Bag to secure the three Pressure Test Pipes to corner panel of unit.

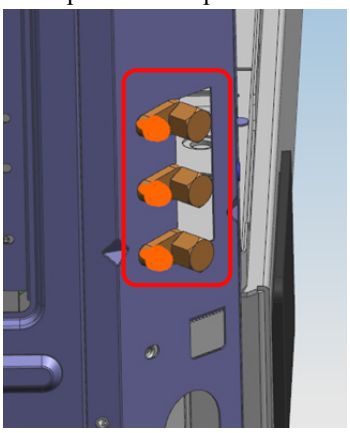

2. Remove the caps on the three service ports.
3. Connect the three pressure test pipes to their respective service ports.

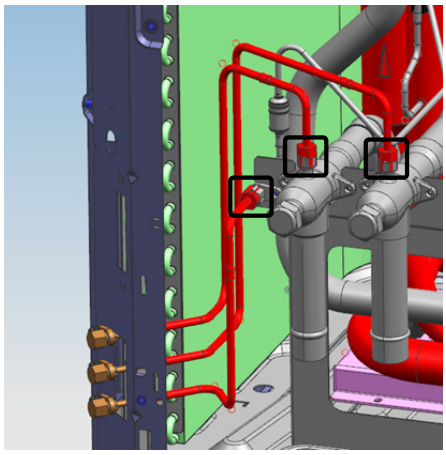

REFRIGERANT PIPING MEASUREMENTS

Figure 7 and Table 11 show permitted piping lengths and height differences for system. Equivalent length of the Y joint is 1.64 feet.

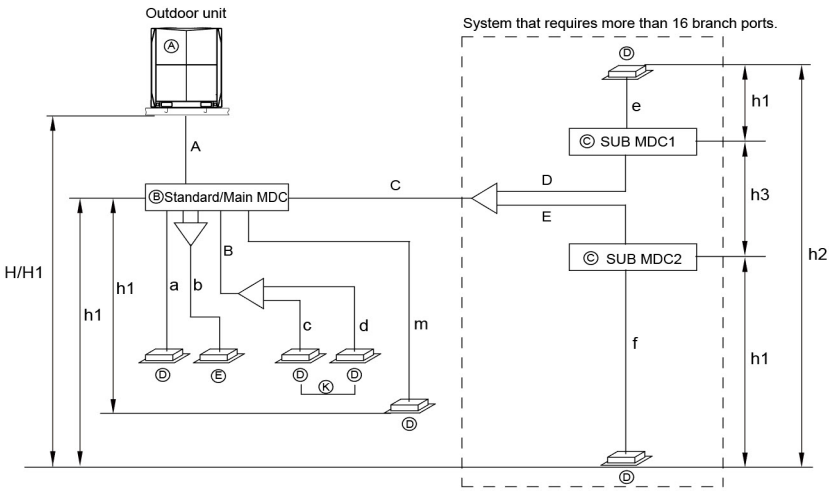

Fig. 7 —Piping Lengths and Heights

Table 11 — Permitted Pipe Lengths and Drop Heights

DESCRIPTION			ALLOWABLE VALUE (ft)	PIPES
Piping Length	Total Extension of Pipe (Liquid Pipe)	Actual Length	≤ 3280	A+B+C+D+E+a+b+c+d+e+f+m
	Furthest Piping Length	Equivalent Length	≤ 623	A+C+E+f
		Actual Length	≤ 541	
	Distance Between Outdoor Unit & Main MDC	Actual Length	≤ 360	A
	Distance Between MDC & Indoor Unit		≤ 131*	B+d, C+D+e, C+E+f, m
Piping Height Difference	Height Between Outdoor & Indoor Unit	Outdoor Unit Above	≤ 164	H
		Outdoor Unit Below	≤ 131	H1
	Height Between MDC & Indoor Unit		≤ 49**	h1
	Height Between Indoor Units		≤ 98***	h2
	Height Between MDCs		≤ 49	h3

* If no indoor unit size 72K or 96K are connected to the MDC port, and if the Height between MDC and Indoor Unit is ≤49 ft, the distance between MDC and Indoor Unit can be extended up to 197 feet. Refer to 38VMR Engineering Manual for details.

** The maximum piping height difference allowable for indoor unit capacity 72K or more is 32 feet.

*** The maximum piping height difference allowable for indoor unit capacity 72K or more is 64 feet.

The Y-joint must be installed parallel to the ground, and the angle of the joint should not be greater than 10°. Positioning the Y-joint more than 10° from parallel can cause malfunctions. See Fig. 30.

Step 2 — Position the Unit — Units are recommended for outdoor use. For single unit installation, see Fig. 8. For multiple or parallel unit installation, see Fig. 9. The unit should be mounted on concrete and fastened to anchor bolts to prevent the unit from tipping. Units installed in areas that are exposed to ambient temperatures below freezing (32°F) should be installed on a snow/ice stand as defined by local codes.

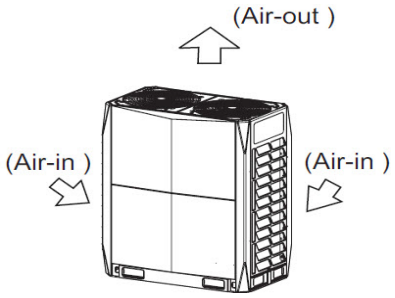

Fig. 8 —Single Unit Installation

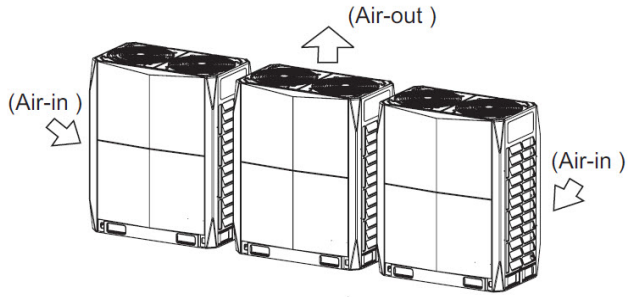

Fig. 9 —Multiple or Parallel Unit Installation

HANDLING THE UNIT — The angle of inclination should not be more than 15° when carrying the unit to avoid overturn of the unit.

Forklift handling: When using a forklift for lifting or transporting the unit, insert the prongs of the forklift into the rectangular holes as shown in Figs. 10-12.

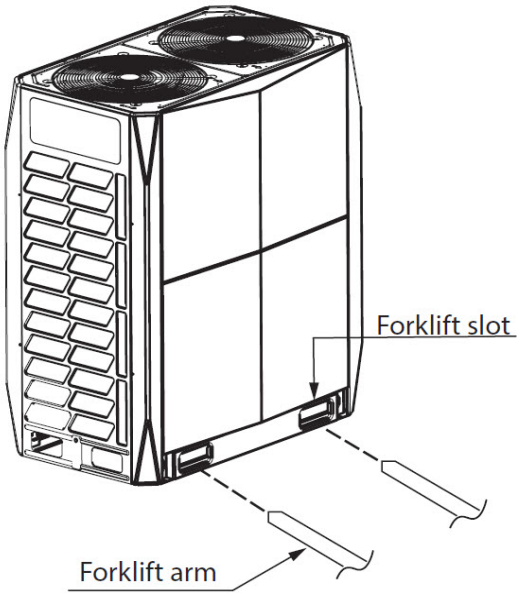

Fig. 10 — Handling the Unit Using a Forklift

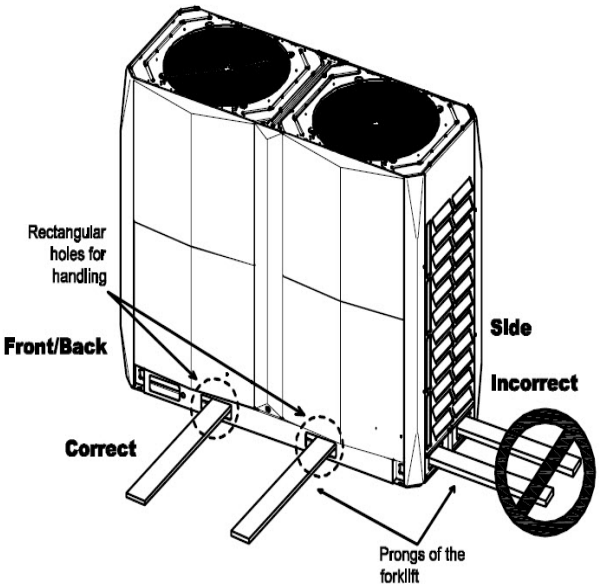

Fig. 11 — Handling the Unit Using a Forklift

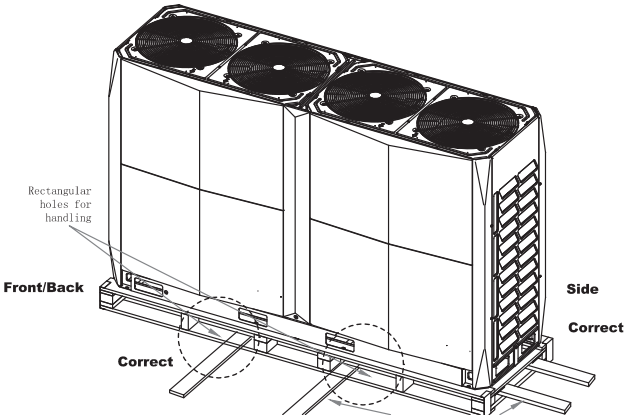

Fig. 12 —Handling Large Cabinet Using a Forklift

LIFTING THE UNIT — Make sure the lifting cable is able to withstand the unit's weight. Connect the cables to the bottom rigging hole locations shown in Fig. 13. Use 2 cables, each connected diagonally to the bottom rigging hole locations. Make sure each cable is long enough to avoid excess tension and force on the surfaces of the unit. To avoid damage to the unit from lifting cables, 2-inch thick wood, cloth, or cardboard spacers should be installed between the cables and contact surfaces of the unit.

⚠DANGER

Do not stand below the unit while it is suspended in the air. If the unit were to fall, it will lead to severe personal injury or death.

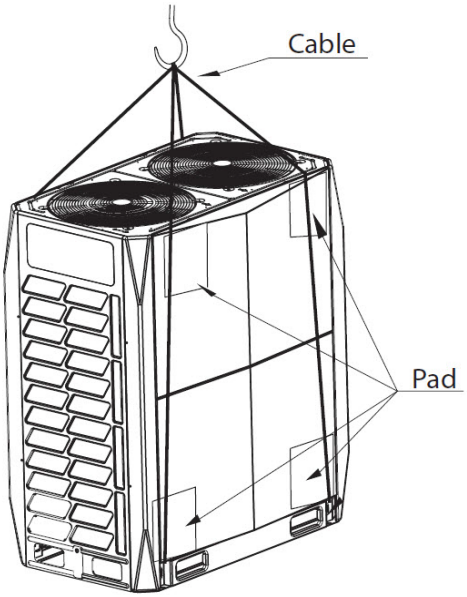

Fig. 13 — Lifting the Unit with Cables

SOLID BASE REQUIREMENTS —

- The unit's base must be made of solid structure (e.g. concrete).
- Ensure that the base is level and that the unit's weight is distributed evenly.
- Create an outlet near the base for drainage.
- Ensure the roof can handle the unit's weight if mounted on the roof.
- When piping from the bottom of the unit, the base height should be no less than 8 inches. See Figs. 14-16 for additional specifications.

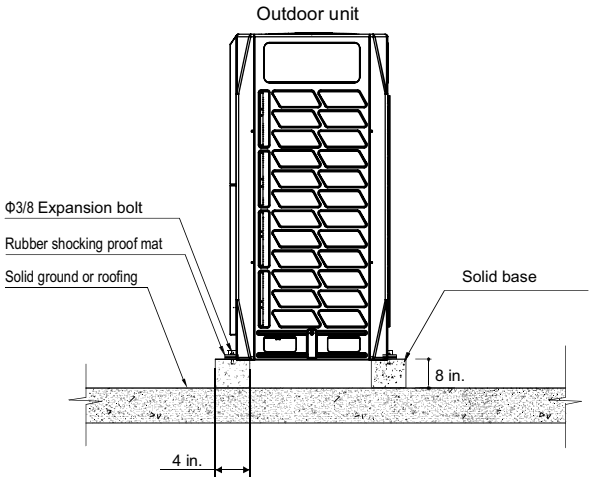

Fig. 14 —Solid Base (Side View)

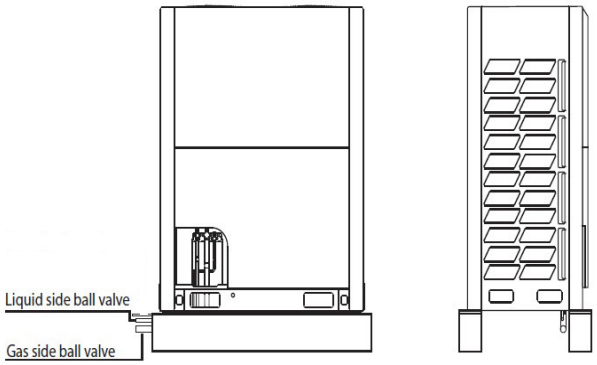

Fig. 15 — Solid Base (Front and Side View)

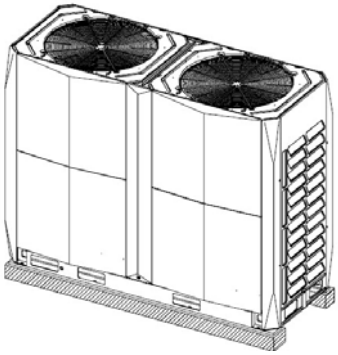

Fig. 16 —Concrete Base (Front and Side View)

SPACE REQUIRED FOR INSTALLATION AND MAINTENANCE — Ensure there is enough space provided for installation and maintenance. See Fig. 17.

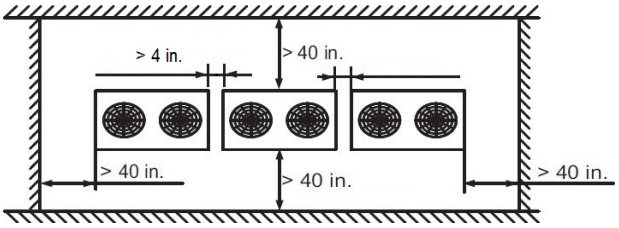

Fig. 17 —Space Required for Maintenance

If the outdoor unit is higher than the surrounding obstacle, follow Fig. 18-20.

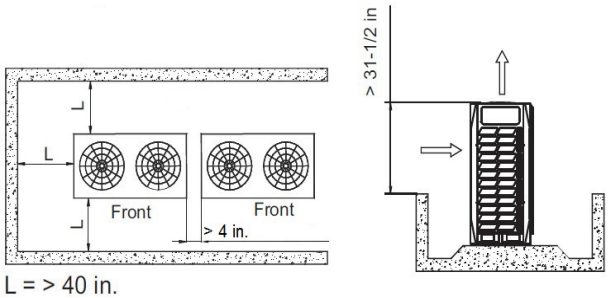

Fig. 18 —Space Required for One Row

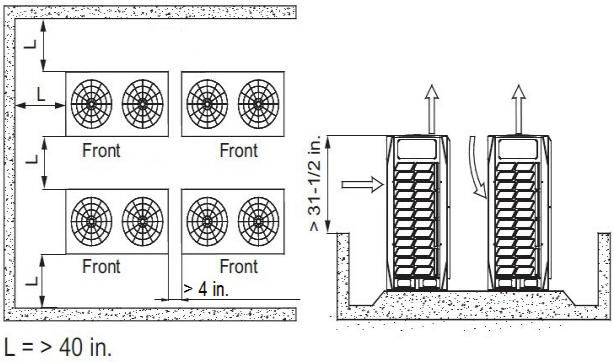

Fig. 19 — Space Required for Two Rows

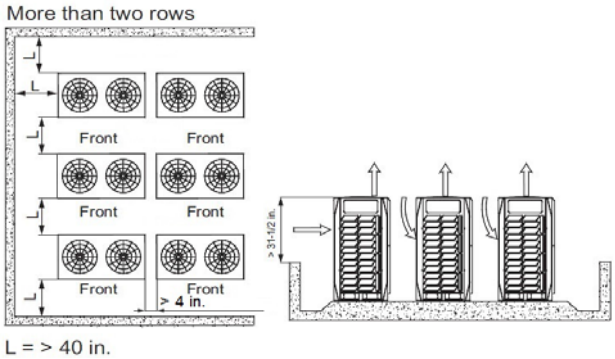

Fig. 20 —Space Required for More Than Two Rows

If the outdoor unit is lower than the surrounding obstacles, add a field-supplied duct to deflect condenser air flow as shown in Fig. 21.

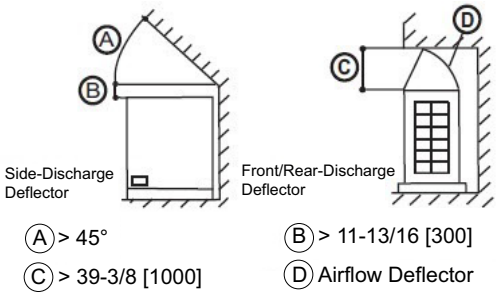

Fig. 21 —Condenser Air Flow Deflector

NOTE: A discharge air deflector is needed if vertical separation, C, from the top of the unit to any obstruction above the ODU is less than 8 feet.

MOUNT THE AIR DEFLECTOR —
Model 072-120 Installation Instructions

Example A

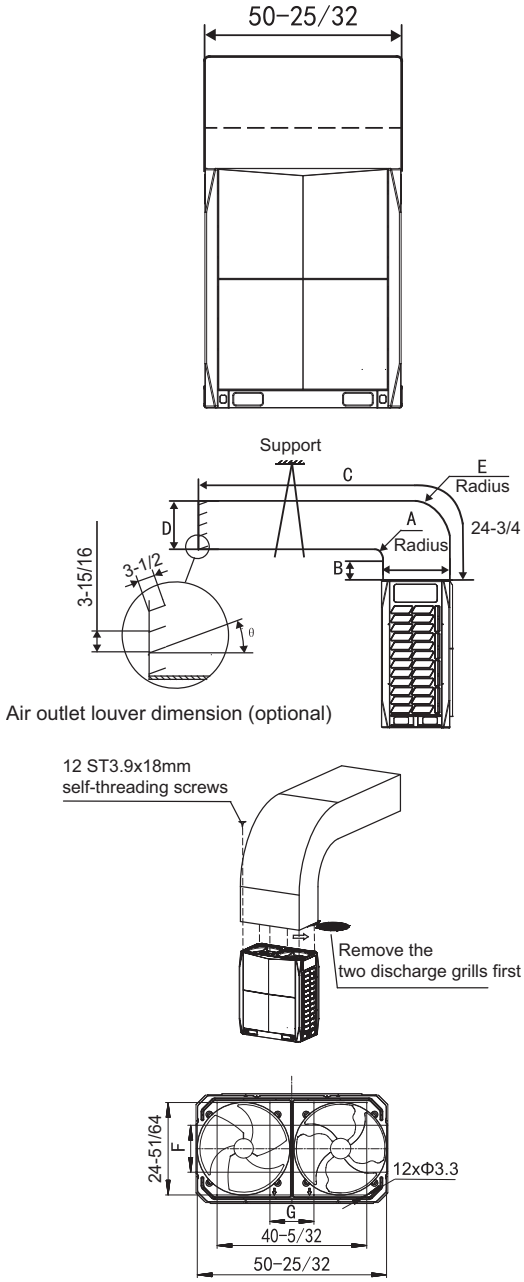

A	A≥11-7/8
B	B≥9-7/8
C	C≤118-1/8
D	24-3/4≤D≤26
E	E=A+24-3/4
F	12-5/8
G	11-7/8
Θ	Θ≤15°

NOTE: All dimensions are shown in inches.

Fig. 22 —072-120 Model Installation Instruction (Example A)

Example B

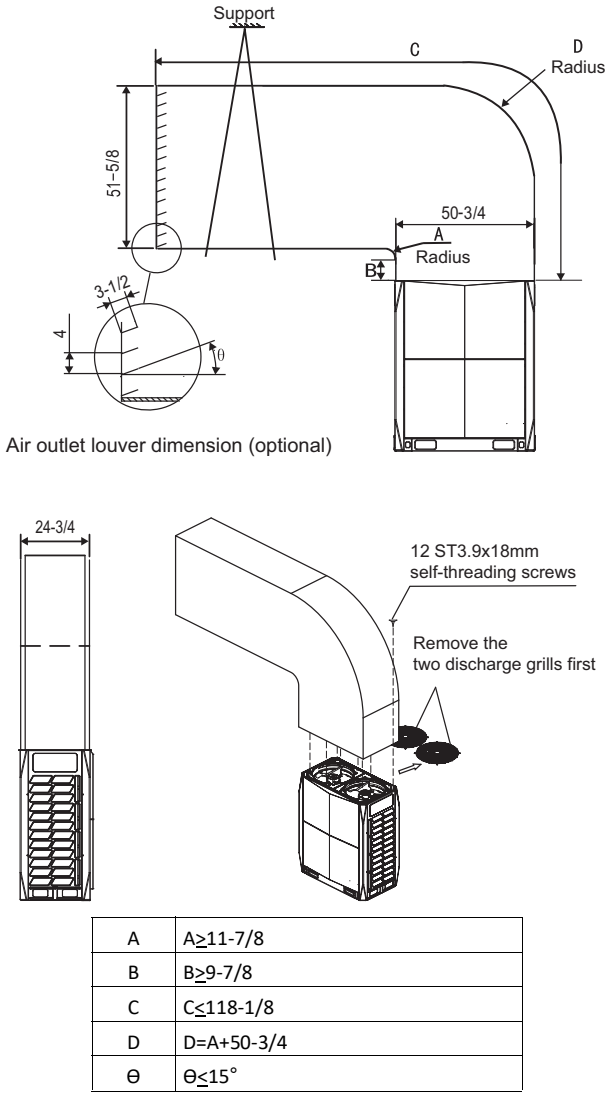

A	A≥11-7/8
B	B≥9-7/8
C	C≤118-1/8
D	D=A+50-3/4
Θ	Θ≤15°

NOTE: All dimensions are shown in inches.

Fig. 23 —072-120 Model Installation Instruction (Example B)

Model 144-240S Installation Instructions

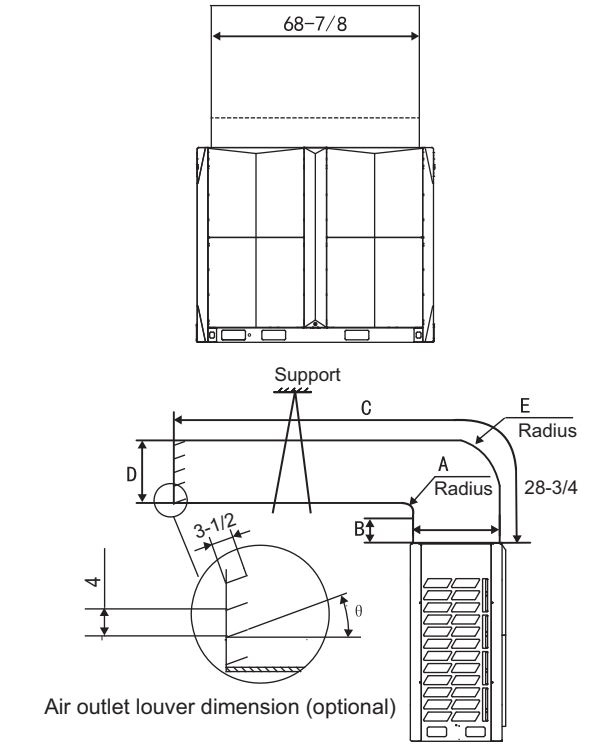

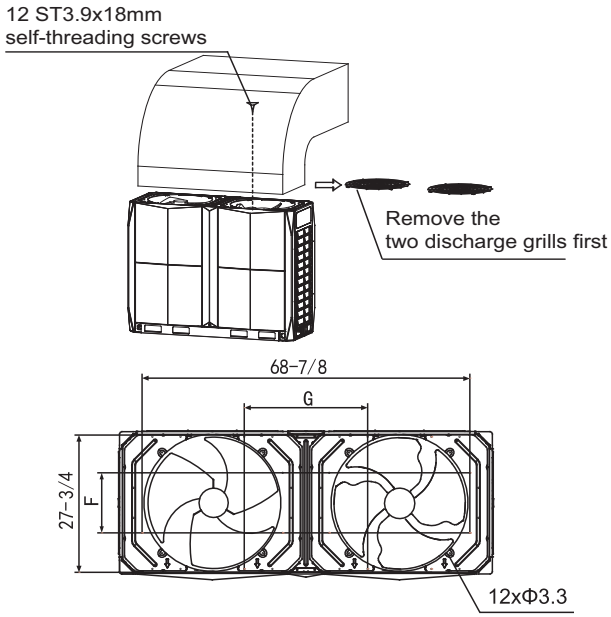

A	A≥11-7/8
B	B≥9-7/8
C	C≤118-1/8
D	28-3/4≤D≤30-5/16
E	E=A+28-3/4
F	12-5/8
G	25-7/8
Θ	Θ≤15°

NOTE: All dimensions are shown in inches.

Fig. 24 —144-240S Model Installation Instruction (Example A)

Model 240L-336 Installation Instructions

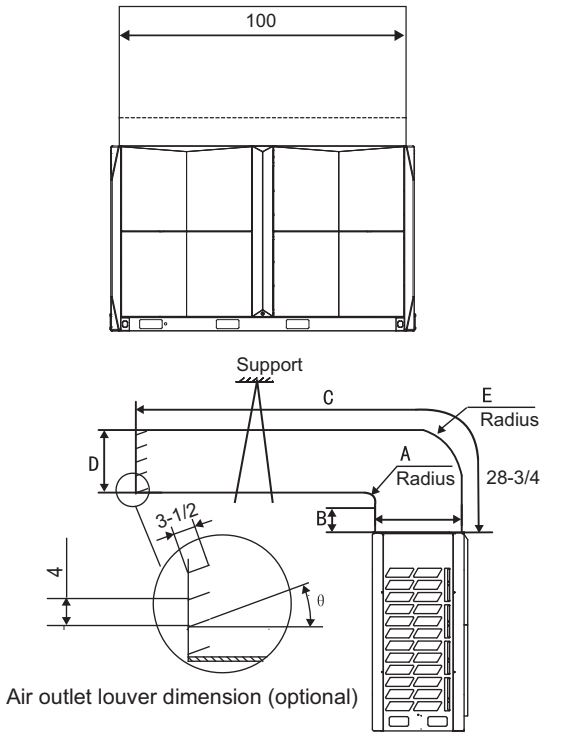

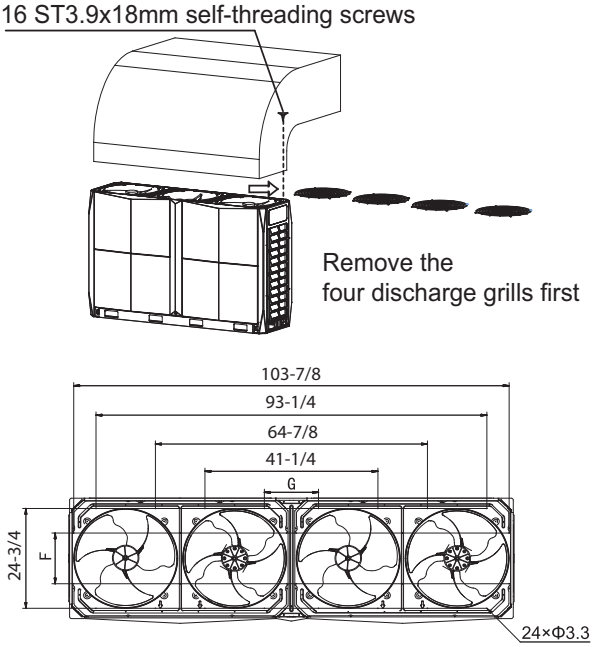

A	A≥11-7/8
B	B≥9-7/8
C	C≤118-1/8
D	28-3/4≤D≤30-5/16
E	E=A+28-3/4
F	12-5/8
G	12-7/8
Θ	Θ≤15°

NOTE: All dimensions are shown in inches.

Fig. 25 —240L-336 Model Installation Instruction (Example A)

Table 11 — Static Pressure

Static Pressure	Remark
0Pa	Factory default
0~20Pa	Remove discharge grille and connect to the wind duct which is less than 3 meters.
Above 20Pa	To enable operation for high static pressure, set the function setting as shown in Table 12.

Table 12 — High Static Pressure Function Settings

Setting	Pressure
n 82	0.08 in.WG [20Pa]
n 83	0.16 in.WG [20Pa]
n 84	0.24 in.WG [20Pa]

NOTES:

- Before installing the air deflector, ensure the discharge air grille has been taken off, otherwise the air supply efficiency would be reduced.
- Once mounting the air outlet louver to the duct, air volume, cooling and heating capacity, and efficiency may be reduced. Thus, it is not recommended to mount an air outlet louver. If use is necessary, adjust the air outlet louver to no more than 15°
- Only one bend is allowed in the air duct to avoid operational issues.
- Install a soft connection between the air duct and the unit to reduce noise.
- The discharge air duct should be flush with the top of the unit and not fit over it. This could obstruct unit side panels.
- Discharge air ducts must be installed independently. Discharge air deflectors cannot be combined between units. The following figure shows improper installation.

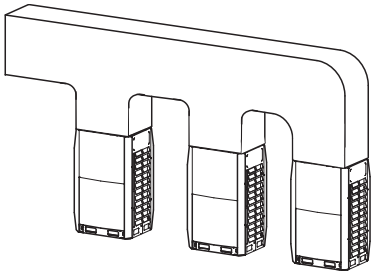

Fig. 26 —Improper installation of discharge air deflectors

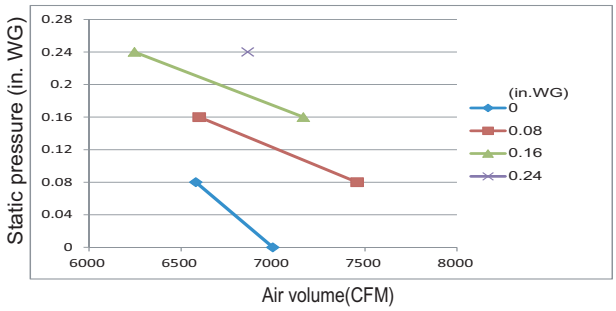

Fig. 27 —Static Pressure vs. Airflow (072 Model)

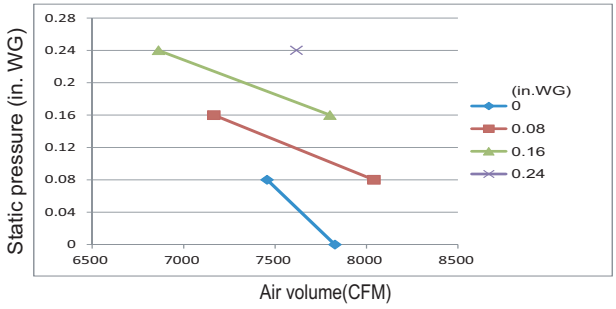

Fig. 28 —Static Pressure vs. Airflow (096 Model)

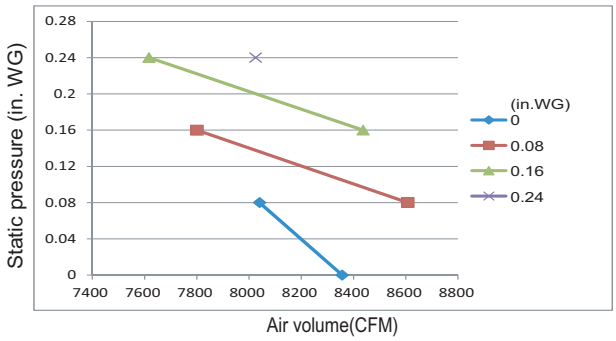

Fig. 29 —Static Pressure vs. Airflow (120 Model)

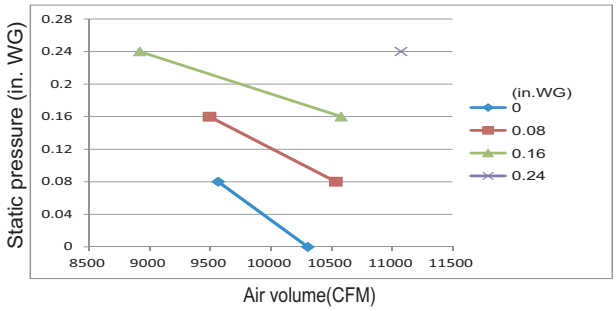

Fig. 30 —Static Pressure vs. Airflow (144 and 168 Models)

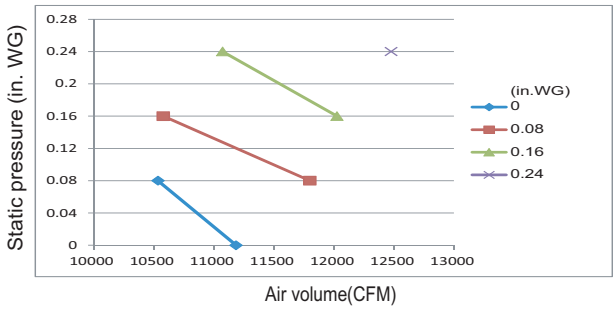

Fig. 31 —Static Pressure vs. Airflow (192 Model)

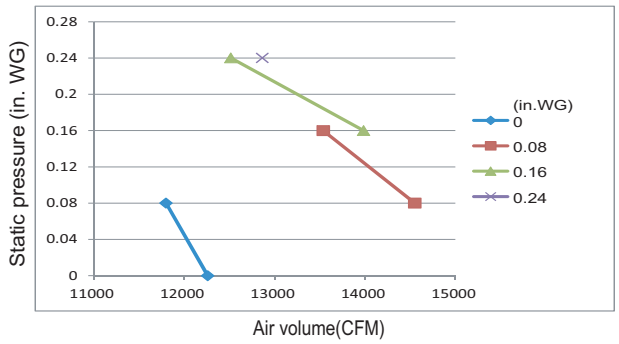

Fig. 32 —Static Pressure vs. Airflow (216 and 240S Models)

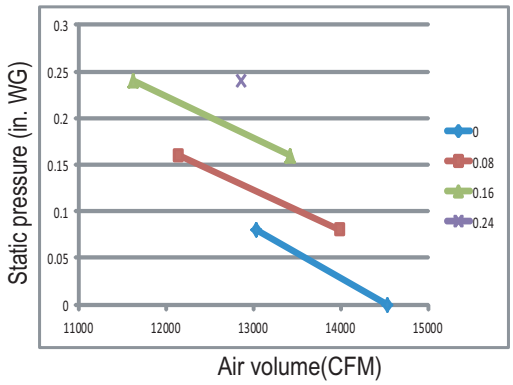

Fig. 33 —Static Pressure vs. Airflow (240L Model)

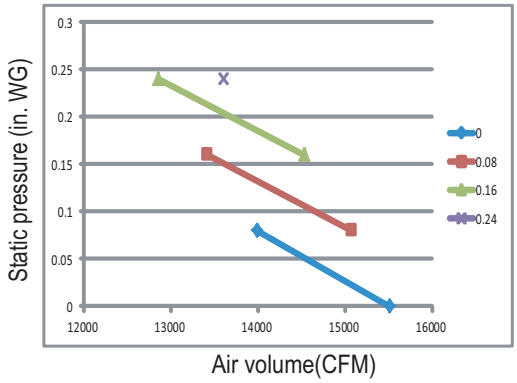

Fig. 34 —Static Pressure vs. Airflow (264 and 288 Models)

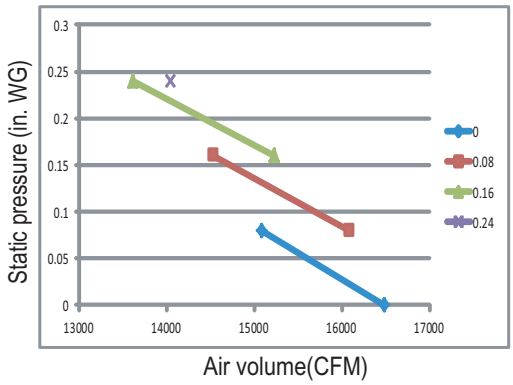

Fig. 35 —Static Pressure vs. Airflow (312 and 336 Models)

SNOW GUARD INSTALLATION — To protect the outdoor unit coil from snow accumulation in certain climates, snow guards are recommended to be installed in the field.

Refer to the snow guard installation manual for dimensional drawings for field fabrication and additional information on snow guards.

The outdoor unit must be mounted at least 12 inches off the ground or 12 inches above the average snow accumulation depth, whichever is greater. Refer to the snow guard installation manual for more details.

Clearances for sides and back of outdoor unit must be at least 16 inches greater than standard installation guidelines.

REMOVING THE UPRIGHT POSTS —

Remove the four screws from the left and right upright posts as shown in Fig. 36

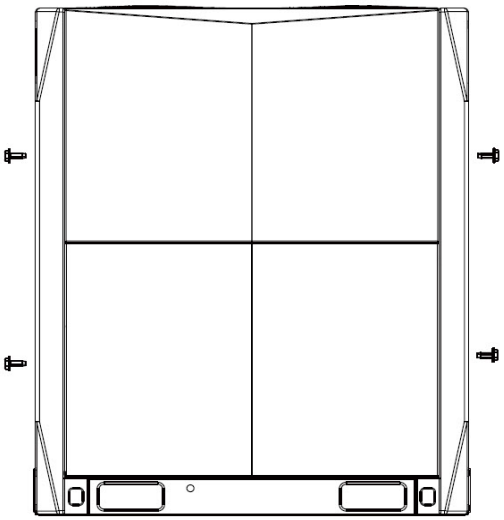

Fig. 36 —Removing the Upright Post Screws

For medium and large cabinets, remove screw at the bottom of the center panel as shown in Fig. 37 before removing the screws shown in Fig. 36.

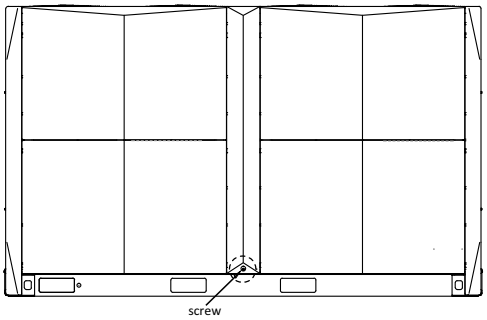

Fig. 37 —Removing the Center Panel Screw for Medium and Large Cabinets

Rotate the upright posts 5° to 10°, and lift them up about 0.079 inches (2 mm) to remove. See Fig. 38.

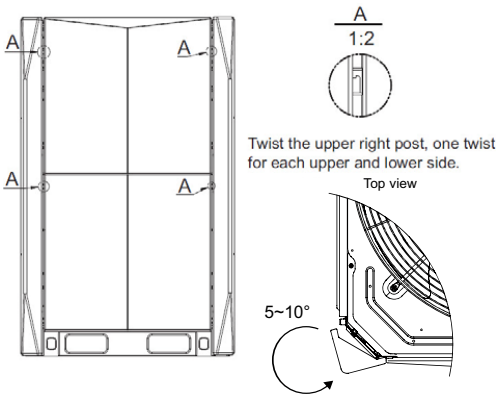

Fig. 38 —Removing the Upright Posts

REMOVING THE FRONT PANELS — Remove the four screws on the top and bottom front panels. Lift them up about 0.12 inches (3mm) and remove as shown in Fig. 25.

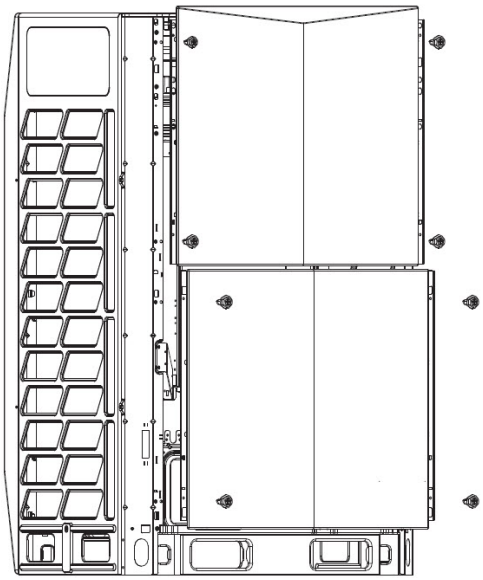

Fig. 25 —Removing the Front Panel

Step 3 — Connect Refrigerant Piping

REFRIGERANT PIPING CONNECTIONS — Fig. 26 describes each refrigerant pipe. When making the refrigerant piping connections, follow these steps:

1. Remove the valve caps and ensure the valves are closed.
2. Use a pipe cutter to remove small pipe caps.
3. Use a torch to remove the large pipe caps.
4. Create a small hole in the rubber gasket and feed the connecting pipes through the hole as shown in Fig. 27.
5. Wrap a wet cloth around the valves before brazing.
6. Braze each connecting pipe to its corresponding valve. See Fig. 27.
7. Brazing should be performed under a constant flow of high-purity nitrogen to prevent oxidation and contamination within the piping.

NOTE: The rubber gasket helps prevent animal nesting.

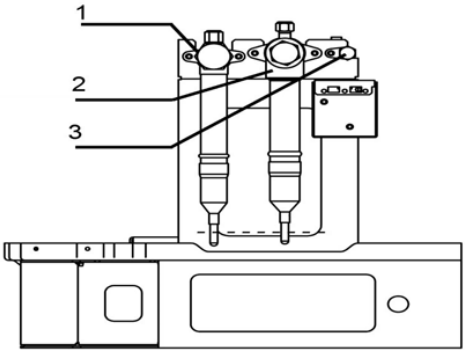

LEGEND

1 — Mixed-phase side ball valve (high pressure)

2 — Gas side ball valve (low pressure)

3 — Service port (for pressure testing and refrigerant charging)

Fig. 26 —Pipe Description

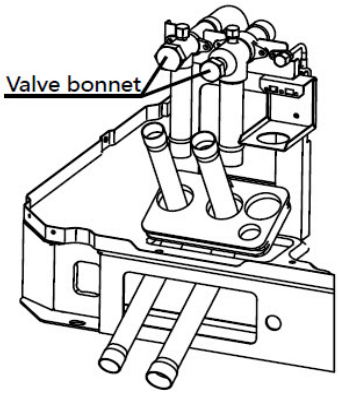

Fig. 27 —Rubber Gasket Locations

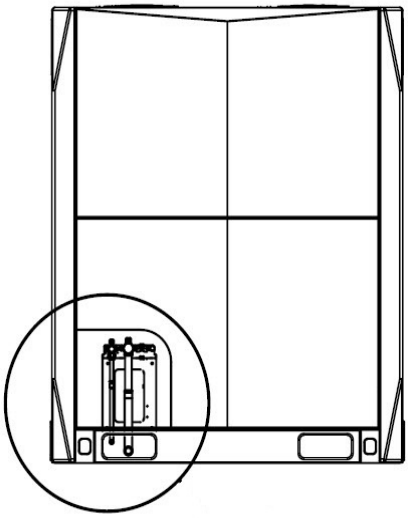

Fig. 27 —Main Pipe Connections

Table 13 — Main Pipe Selection (A)

OUTDOOR UNIT CAPACITY (kBtu/h)	HIGH PRESSURE SIDE (in.)	LOW PRESSURE SIDE (in.)
72	5/8	3/4
96	3/4	7/8
120	3/4	1-1/8
144	7/8	1-1/8
168	7/8	1-1/8
192	7/8	1-1/8
216	1-1/8	1-1/8
240	1-1/8	1-3/8
240L	1-1/8	1-3/8
264	1-1/8	1-3/8
288	1-1/8	1-3/8
312	1-1/8	1-5/8
336	1-1/8	1-5/8

Table 14 — Grouped Indoor Unit Pipe Selection (B)

TOTAL CAPACITY CODE OF DOWNSTREAM INDOOR UNITS (kBth/h)	LIQUID SIDE (in.)	GAS SIDE (in.)
≤54	3/8	5/8

Table 15 — Selection of Pipes Between MDCs (C,D,E)

TOTAL CAPACITY OF DOWNSTREAM INDOOR UNITS (kBtu/h)	HIGH PRESSURE SIDE (in.)	LOW PRESSURE SIDE (in.)	LIQUID SIDE (in.)
≤72	5/8	3/4	3/8
73-108	3/4	7/8	3/8
109-126	3/4	1-1/8	1/2
127-144	7/8	1-1/8	1/2
145-168	7/8	1-1/8	5/8

Table 16 — Indoor Unit Pipe Selection (a, b, c, d, e, f)

INDOOR UNIT CAPACITY (kBtu/h)	LIQUID SIDE (in.)	GAS SIDE (in.)
07, 09, 12, 15	1/4	1/2
18, 24, 30, 36, 48, 54	3/8	5/8
72	3/8	3/4
96	3/8	7/8

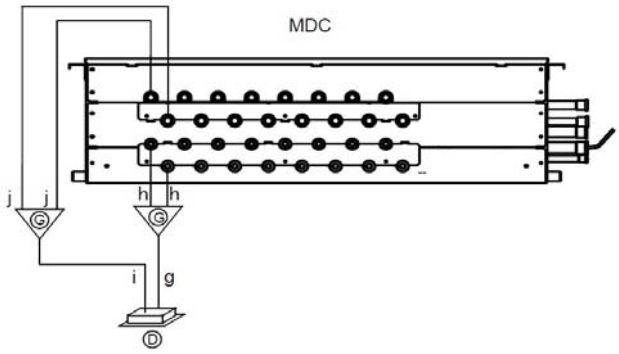

Fig. 29 —Merge the two ports

Table 17 — Twinned Port Indoor Unit Pipe Selection (g,h,i,j)

INDOOR UNIT CAPACITY (kBtu/h)	Y JOINT MODEL	LIQUID SIDE (in.)		GAS SIDE (in.)	
		g	h	i	j
72	40VM900043	3/8	3/8	5/8	5/8
96		3/8	3/8	7/8	5/8

Table 18 — Y Joint Selection

TOTAL CAPACITY DOWNSTREAM INDOOR UNITS (kBtu/h)	Y JOINT MODEL	HIGH PRESSURE SIDE (in.)	LOW PRESSURE SIDE (in.)	LOW PRESSURE SIDE (in.)
<72	40VM900041	5/8	3/4	3/8
73-108		3/4	7/8	3/8
109-126	40VM900042	3/4	1- 1/8	1/2
127-144		7/8	1-1/8	1/2
145-168		7/8	1-1/8	5/8

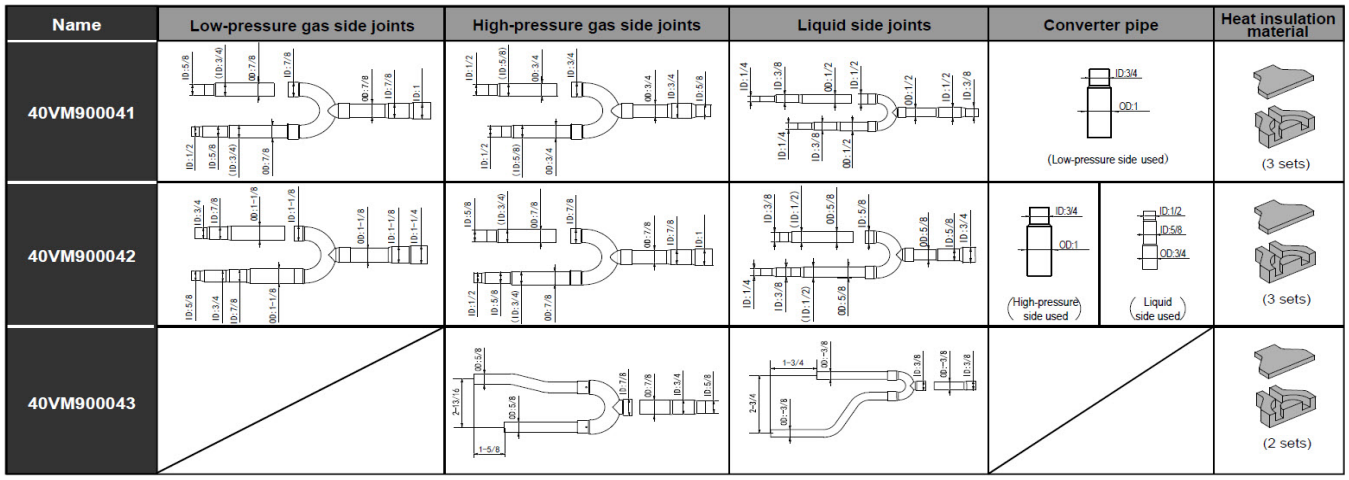

Fig. 30 —Y Joint

Step 4 — Pressure and Vacuum Test System

After completing the refrigerant piping, perform the following pressure test:

1. Connect the nitrogen canister to the system through the high-pressure gas side valve from the meter connector.
2. Gradually apply nitrogen pressure to 540 psig.
3. If the pressure decreases rapidly, locate and repair the leak, and pressurize the system again.
4. Repeat steps 1-3 until the system remains at 540 psig for 24 hours.

After completing the pressure test, perform the following vacuum test:

1. Relieve the system of the nitrogen gas.
2. Connect a vacuum pump capable of achieving 500 microns or lower absolute pressure.
3. Vacuum the system to 500 microns or lower and check for rapid pressure change.
4. Repeat steps 1-3 until the system remains at 500 microns or lower for one hour.

When finished, replace the vacuum pump with the R-410A refrigeration canister.

Step 5 — Adjust Refrigerant Charge

Calculate the amount of refrigerant to add using Tables 19 through 23 and Fig. 31.

Table 19 — Refrigerant to Add per High Pressure Pipe

HIGH PRESSURE (MIXED-PHASE) PIPE DIAMETER Ø (in.)	REFRIGERANT TO BE ADDED PER FOOT (lb/ft)
1 -1/8	0.254
7/8	0.141
3/4	0.094
5/8	0.061

Table 20 — Refrigerant to Add per Liquid Pipe

LIQUID PIPE DIAMETER Ø (in.)	REFRIGERANT TO BE ADDED PER FOOT (lb/ft)
5/8	0.114
1/2	0.074
3/8	0.038
1/4	0.015

Table 21 — Refrigerant to Add for Main MDCs

Main MDC Model Name	Charge Amount per Unit (lbs)
40VMD006M--3	11.0
40VMD008M--3	11.0
40VMD010M--3	11.0
40VMD016M--3	11.0
40VMD016ML--3	15.4

Table 22 — Refrigerant to Add for Sub MDCs

Sub MDC Model Name	Charge Amount per Unit (lbs)
40VMD006S--3	2.2
40VMD008S--3	2.2
40VMD010S--3	4.4
40VMD016S--3	4.4

Table 23 — Refrigerant to Add for Connected Capacity

Total Connected Capacity of Indoor Units	Charge Amount per Unit (lbs)
50%~100%	0
100%~120%	1.1
120%~130%	2.2
130%~	3.3

R = (HP x RHP) + (LP x RLP) + MM + SM + CC

Legend:
R = Refrigerant (lbs)
HP = Actual length of high pressure at diameter Ø (ft)
RHP = Refrigerant to add per high pressure pipe (lbs/ft) (Table 15)
LP = Actual length of liquid pipes at diameter Ø (ft)
RLP = Refrigerant to add per liquid pipe (lbs/ft) (Table 16)
MM = Refrigerant to add for Main MDCs (lbs/ft) (Table 17)
SM = Refrigerant to add for Sub MDCs (lbs/ft) (Table 18)
CC = Refrigerant to add for connected capacity (lbs/ft) (Table 19)

Fig. 31 —Calculating the Amount of Refrigerant to Add

MAXIMUM REFRIGERANT CHARGE — There is a limit to the amount of refrigerant that can be charged into a unit regardless of the amount yielded by the formula in Fig. 31. Observe the maximum refrigerant charge in Table 24.

Table 24 — Max Refrigerant Charge

Outdoor Unit Model Name	72	96	120	144	168	192	216	240	264	288	312	336
Max *1 Refrigerant Charge	57.32	61.73	66.14	121.25	121.25	143.30	165.34	165.34	165.34	165.34	165.34	165.34

* 1 maximum refrigerant charge: the amount of refrigerant to be added on site.

All service valves on the outdoor units should remain fully closed.

R-410A refrigerant should be added (in liquid state) at the liquid line service port on the unit.

If the total calculated amount of refrigerant can be added to the system, the charging process is finished.

If the total calculated amount of refrigerant cannot be added to the system, close the valve on the refrigerant bottle, and move the charging house from the liquid line service port to the suction line service port.

Open the suction and liquid service valves on the unit and start the system in cooling mode.

Slowly open the valve on the refrigerant bottle and carefully release the liquid refrigerant into the suction service port.

The charging process is finished when the total calculated charge amount is added completely to the system.

Step 6 — Complete Electrical Connections

⚠ WARNING

Electrical shock can cause personal injury and death. Disconnect the power supply before making wiring connections. There may be more than one disconnect switch. Tag all disconnect locations to alert others not to restore power until work is completed.

⚠ WARNING

All units must be wired strictly in accordance with the wiring diagram furnished with the unit. Any wiring different from the wiring diagram could result in personal injury and property damage.

⚠ CAUTION

Any original factory wiring that requires replacement must be replaced with wiring material having a temperature rating of at least 105 C.

Ensure supply voltage to the unit, as indicated on the serial plate, is not more than 10% over the rated voltage or 10% under the rated voltage.

Failure to follow these recommendations may result in equipment damage.

POWER SUPPLY — Electrical characteristics of the available power supply must agree with the unit nameplate rating. Circuit breaker size and supply voltage must be as shown in Table 25.

⚠ WARNING

Operating unit on improper supply voltage or with excessive phase imbalance may result in equipment damage and can affect the manufacturer's warranty.

Table 25 — 38VMR Electrical Data

Supply Voltage Power Supply (V-Ph-Hz)	38VMR Unit Size	POWER SUPPLY	
		MCA	Recommended Fuse Size
208/230-3-60	072	43	50
	096	45	50
	120	46	50
	144	70	80
	168	70	80
	192	71	80
	216	81	100
	240	81	100
	240L	101	110
	264	104	110
	288	104	110
	312	106	110
	336	106	110
460-3-60	072	20	30
	096	22	30
	120	22	30
	144	35	40
	168	35	40
	192	35	40
	216	38	40
	240	38	40
	240L	52	60
	264	54	60
	288	54	60
	312	55	60
	336	55	60

LEGEND

MCA — Minimum Circuit Amps

OPENING AND CLOSING THE ELECTRICAL COMPONENT BOX — Open and close the electric control box cover as shown in Fig. 32. Do not apply excessive force to the cover. Use a screwdriver to unscrew a short distance, but do not remove the screw.

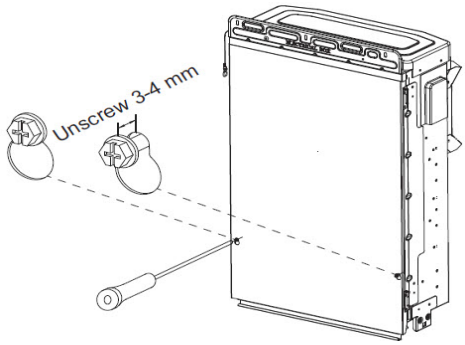

Fig. 32 —Removing Screws From the Panel

While holding the cover plate from the bottom, lift it slightly so that the screws clear their keyholes. Tilt it outwards and remove as shown in Fig. 33 and 34.

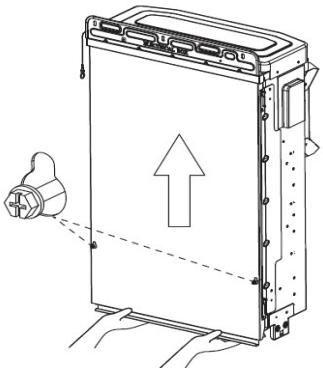

Fig. 33 —Lift the Cover Plate Up

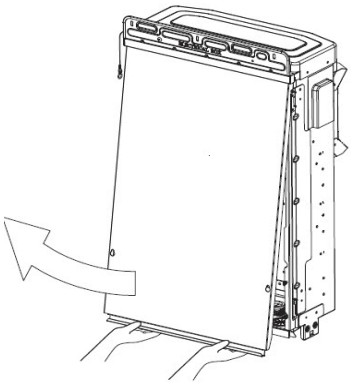

Fig. 34 —Remove the Cover Plate

POWER WIRING — Installation of wiring must conform with the local codes and with NEC ANSI/NFPA 70, current editions. Units must be electrically grounded in conformance with the code. In Canada, wiring must comply with the CSA C22.1, Electrical Code.

Fig. 35 shows the location of the outdoor units power terminal block.

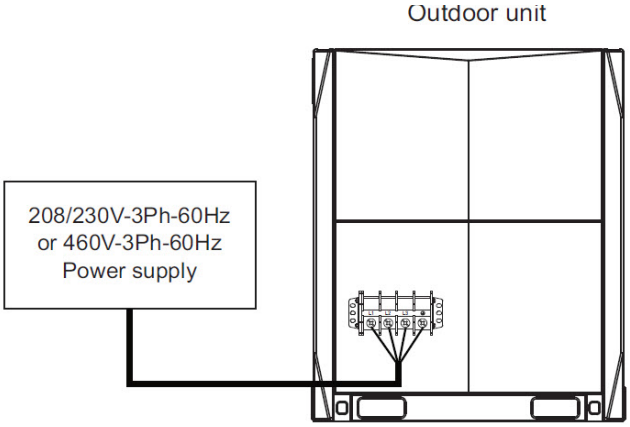

Fig. 35 —Outdoor Unit Power Terminal Block

After selecting the power wire, strip a suitable length of insulation and attach the ring terminal using the proper crimping tool. Use the ring terminals provided to connect the power wiring as shown in Fig. 36.

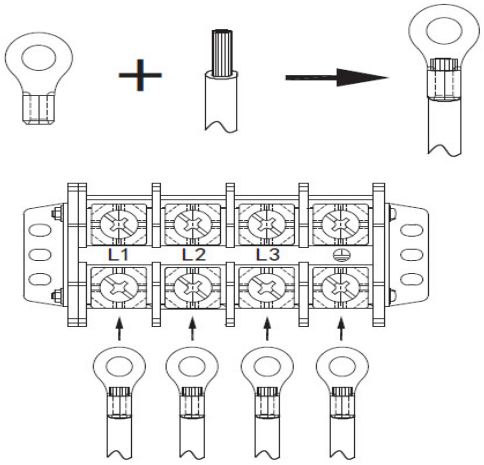

Fig. 36 —Stripping and Attaching the Power Wire

Fig. 37 shows the arrangement of the power wires.

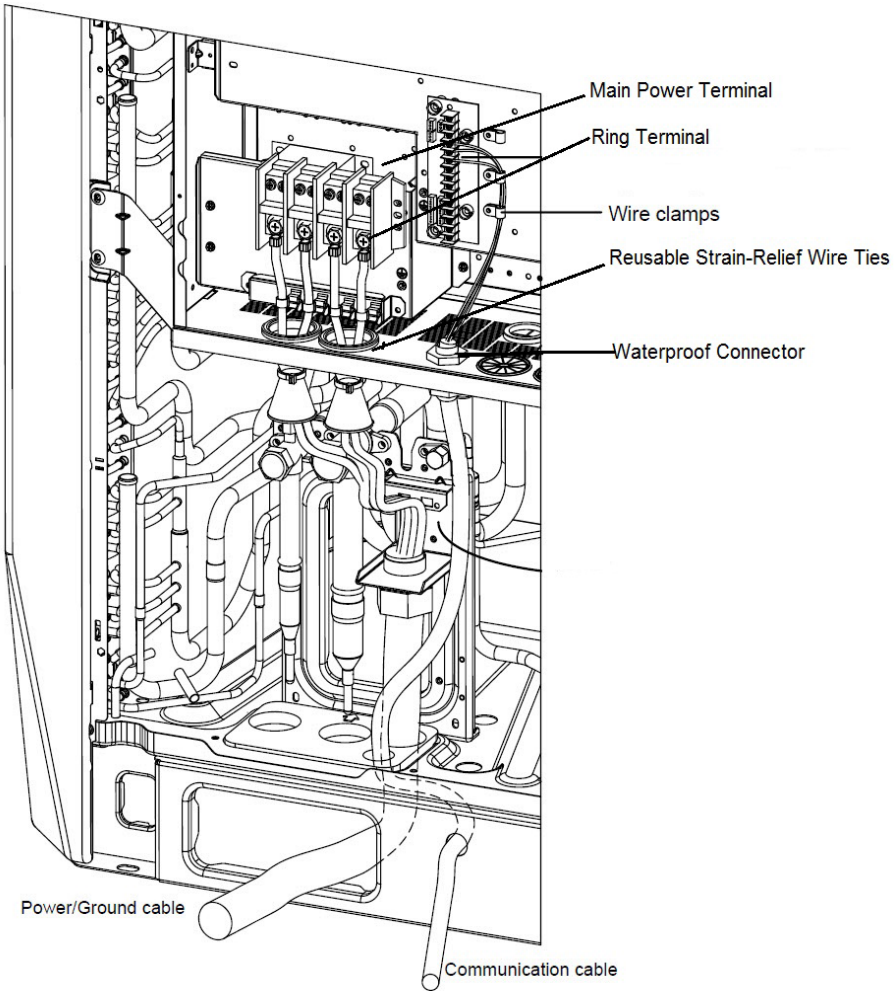

Fig. 37 — Outdoor Unit Power Wiring Arrangement

WIRING COMMUNICATION TERMINAL BLOCK —

Figure 37 is the communication port diagram for the outdoor unit.

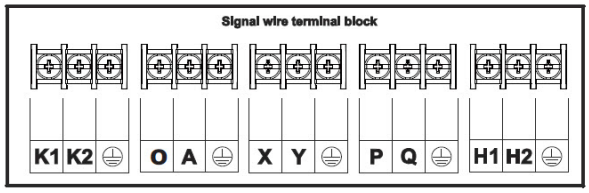

LEGEND

K1, K2 — Reserved

O,A — To kWh Meter

X,Y — To Centralized Controller

P,Q — To MDC Communication Bus

H1, H2 — Reserved

Fig. 37 —Outdoor Unit Communication Port Diagram

COMMUNICATION CABLE —

The communication cable must be a 2-core stranded shielded cable. The diameter of the wire should be AWG 18. The maximum wire length should be within 3,937 feet between the outdoor and indoor units and within 820 feet between the wired controller and indoor units. The communication wires are sold separately; however, they can be obtained through Carrier.

Figure 38 shows a typical communication wire from Carrier.

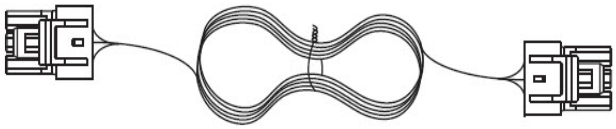

Fig. 38 —Typical Communication Wire

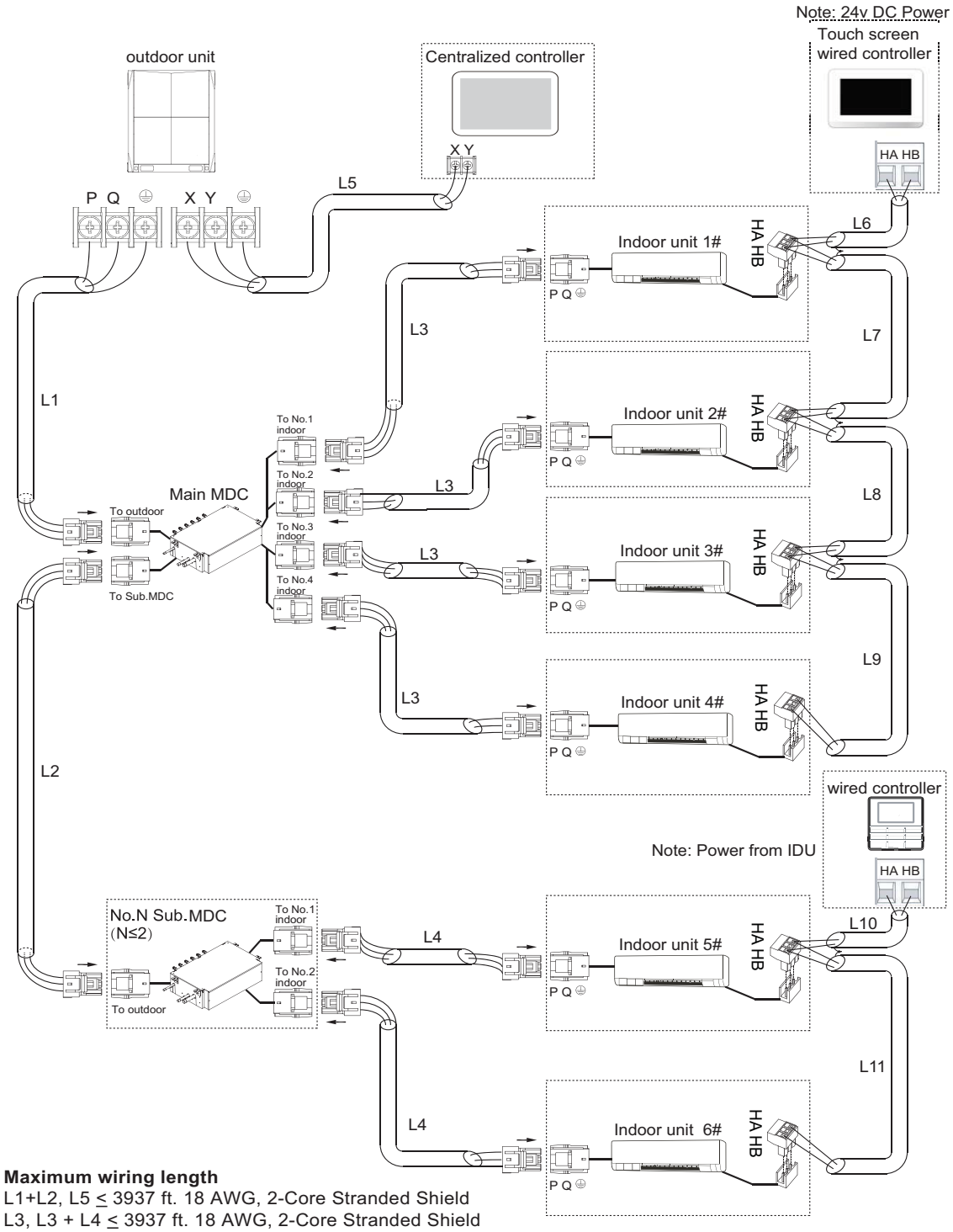

Maximum wiring length

L1+L2, L5 ≤ 3937 ft. 18 AWG, 2-Core Stranded Shield

L3, L3 + L4 ≤ 3937 ft. 18 AWG, 2-Core Stranded Shield

L6+L7+L8+L9, L10 + L11 ≤ 820 ft. 18 AWG, 2-Core Stranded Shield

LEGEND

MDC — Multiport Distribution Controller

Fig. 39 —Typical Communication Wiring Diagram

NOTE: Field wire must use copper conductors only.

Network Communication Wiring for Combination of Touch Screen Central Controller and BACnet

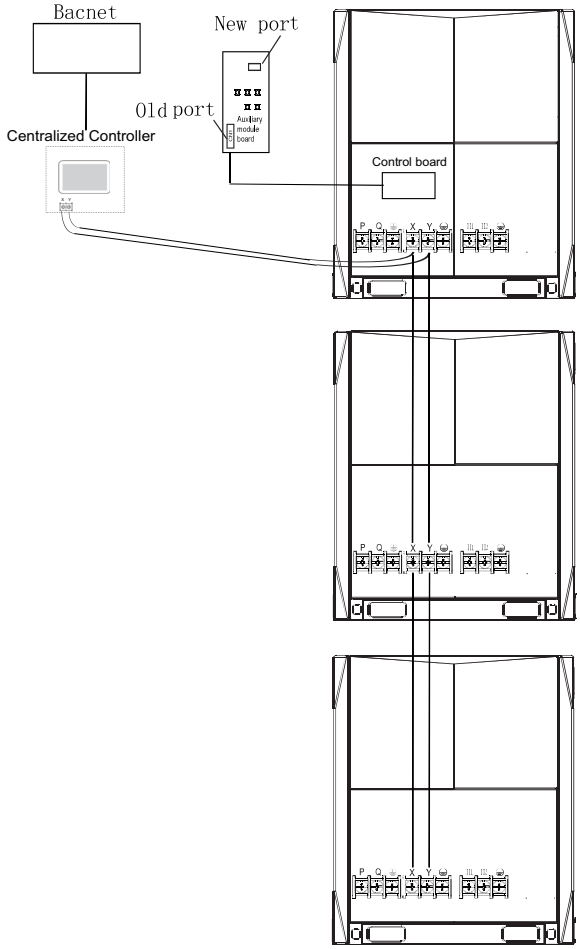

Fig. 40 —Wiring for Touch Screen Central Controller and BACnet

NOTE: When an X,Y daisy chain from multiple ODU's is connected to a single port on the central controller device, a linear address structure must be applied to all connected IDU's (1-64) with no duplicating IDU addresses. The central controller will not recognize ODU the address if there are duplicates.

For jobs where both touch screen central controller and BACnet are required, the network communication wiring should be as shown in Figure 40. Figure 40 shows a multiple refrigerant system with touch screen central controller and BACnet. Follow the guidelines below when combining a touch screen central controller and BACnet.

- BACnet only: set BACnet to Polling mode.
- BACnet + TSCC: set BACnet to Listen Only mode.
- TSCC + BACnet and STT cannot be used at same time. Only 1 “Polling” control can be used at a time.
  - STT is a Polling control
  - TSCC is a Polling control
  - BACnet is either a Polling control or a Listen Only control

Refer to Fig. 38 for how to change the mode of each interface’s X/Y/E buses. For additional details, Refer to the BACnet Interface IOM.

CONTROLLER CONFIGURATION — In the dropdown menus, you can select the mode of each of the four X/Y/E buses. Buses can be set to Polling Mode, Listening Mode, or Idle. Click “Apply” after making desired changes.

Fig. 41 —Configuring the Controller

COMMUNICATION WIRING — Do not route communication wire with high voltage power wire or allow it to come in contact with non-insulated piping and sharp edges.

> IMPORTANT: Wiring for communication shall be 2 inches or more apart from power source wiring to avoid electric noise. Do not insert control/communication and power source wire in the same conduit.
>
> Pay attention to the polarity of the communication wire.

OPTION/EXTENSIONS OF COMMUNICATION WIRING — To extend the control wiring or establish terminal connections, use the PQE connection wire supplied in the accessory kit and use the following steps.

1. Cut connector on outdoor unit side as shown in Fig. 42.

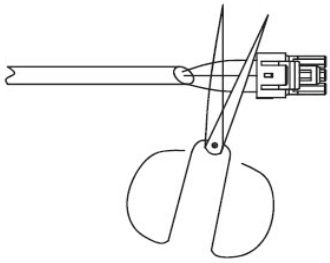

Fig. 42 —Shearing Outdoor Connector

2. Strip a suitable length of the insulation layer as shown in Fig. 43.

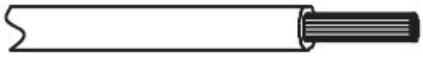

Fig. 43 —Stripping The Wire

3. Use a screwdriver to secure the communication wire on the outdoor unit communication terminal as shown in Fig. 44.

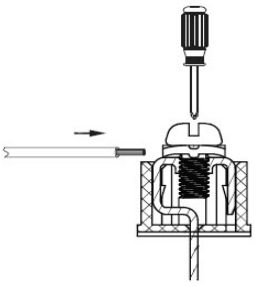

Fig. 44 —Connecting Communication Wire To Outdoor Unit Communication Terminal

If communication wires are used to connect MDC and the indoor unit, locate the corresponding port and plug it directly as shown in Fig. 45.

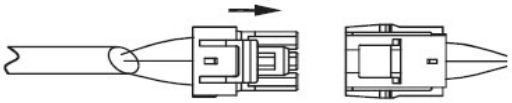

Fig. 45 — Connecting The Communication Wires

If it is not possible to buy communication wires from Carrier, connect the indoor unit and MDC of the communication wires using the connector provided with the accessories. See Fig. 46.

> **⚠ CAUTION**
>
> NEVER CONNECT the main power source to the control or communication terminal block.
>
> USE AN APPROPRIATE SCREWDRIVER for tightening the terminal screws. Do not over tighten the terminal screws.
>
> Failure to follow these procedures may result in personal injury or damage to equipment.

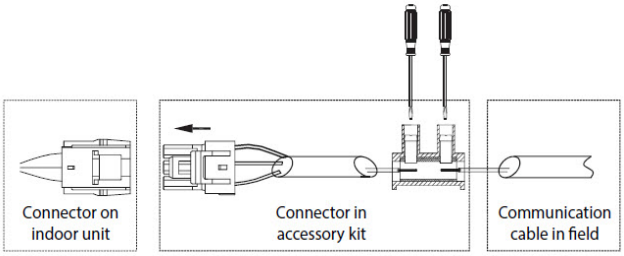

Fig. 46 — Connecting Communication Cable to Indoor Unit to Outdoor Unit using Supplied Connector

START-UP

TRIAL RUN

Set a different address for each indoor unit. The addresses can range from 0 to 63. The addresses are set manually using the wireless remote or wired controller. Set the total number of indoor units on the main board.

Set the total number of indoor units on the main board.

Table 26 — Unit Settings

Symbol	Switch	Status	Function	Remarks
S10		10	Skip test operation (Factory default)	
		00	Test operation (The system can run normally on a successful auto-commissioning operation)	
ENC3+S12		0-F	Setting the number of indoor units 0-15. 0-9 on ENC3 refer to 0-9 indoor units; A-F on ENC3 refer to 10-15 indoor units.	
		000		
		0-F	Setting the number of indoor units 16-31. 0-9 on ENC3 refer to 16-25 indoor units; A-F on ENC3 refer to 26-31 indoor units.	
		001		
		0-F	Setting the number of indoor units 32-47. 0-9 on ENC3 refer to 32-41 indoor units; A-F on ENC3 refer to 42-47 indoor units.	
		010		
		0-F	Setting the number of indoor units 48-63. 0-9 on ENC3 refer to 48-57 indoor units; A-F on ENC3 refer to 58-63 indoor units.	
		011		
		0	Setting the number of indoor units 64.	
		100		
ENC4 + ENC1		0-7	The quantity of outdoor unit. 0-7 on ENC4 and 0 on ENC1.	
		0		

UNIT SETTING

1. Hold the **MENU(SW4)** button down for five seconds to enter the menu.
2. Press **UP(SW5)** / **DOWN(SW6)** button to select and set the item. When the number is chosen, the number will flash. Press **OK(SW3)** to confirm and set the next number. Use Table 27 as a reference.
3. Hold **OK(SW3)** again to exit the main menu.

Table 27 — List of Menu Functions

Symbol	Function	Item	Description
n1_	Special function for debugging	n11	Test operation mode
		n14	Forced cooling
		n15	Forced heating
		n16	Forced defrosting
n2_	Refrigerant recycle function	n21	Refrigerant recycled to outdoor unit
		n22	Refrigerant recycled to indoor units
		n23	Refrigerant recycled to piping
n3_	Error and version query	n31	Historical malfunction query
		n32	Clear the historical malfunction
		n33	Version of fan inverter module
n4_	Night time setting	n41	6/10H (default)
		n42	6/12H
		n43	8/10H
		n44	8/12H
n5_	Silent mode setting	n51	Night silent mode
		n52	Silent mode
		n53	Super silent mode
		n54	Silent mode off (default)
n6_	Defrost mode setting	n61	Easy to defrost
		n62	Standard mode (default)
		n63	Hard to defrost
n7_	Demand control setting	n71	Level demand 1 (No limitation) (default)
		n72	Level demand 2
		n73	Level demand 3
		n74	Level demand 4
		n75	Level demand 5
		n76	Level demand 6
n8_	Static pressure mode setting	n81	Standard static pressure mode (default)
		n82	Low static pressure mode
		n83	Medium static pressure mode
		n84	High static pressure mode
n9_	Tes setting	n91	Tes0=37°F), Tes automatically adjusts (default)
		n92	Tes0=32°F, Tes automatically adjust
		n93	Tes0=43°F, automatically adjust
		n94	Low level 1 (Tes=48°F),locked
		n95	Low level 2 (Tes=43°F),locked
		n96	Medium level 1 (Tes=37°F),locked
		n97	Medium level 2 (Tes=32°F),locked
		n98	High level (Tes=27°F),locked
nA_	Tcs setting	nA1	Tcs=118°F, Tsc automatically adjust (default)
		nA2	Tcs=122°F, Tsc automatically adjust
		nA3	Tcs=113°F, Tsc automatically adjust
		nA4	Low level 1 (Tcs=118°F),locked
		nA5	Low level 2 (Tcs=111°F),locked
		nA6	Medium level 1 (Tcs=115°F),locked
		nA7	Medium level 2 (Tcs=118°F),locked
		nA8	High level (Tcs=124°F),locked
nb_	Temperature unit setting	nb1	Temperature unit (Celsius)
		nb2	Temperature unit (Fahrenheit) (default)
nC_	T4 sensor (outdoor temperature) threshold to enable Auxiliary Heat. Aux heat will enable when outdoor temperature falls 1.8°F below this temperature.	nC1	Auxiliary heat disabled
		nC2	5°F
		nC3	15°F
		nC4	25°F
		nC5	35°F
		nC6	45°F
		nC7	55°F
		nC8	65°F

Snow-Blowing Function

1. Press SW5 button on spot check box of the outdoor unit to enter the snow-blowing function. It will display “Sn0” for 15 seconds.
2. Press SW5 button again to exit the snow-blowing function. It will display “Sn1” for 15 seconds.

The snow-blowing modes can be selected through S11 dip switch on spot check box.

Mode	Heavy Snow Mode	Light Snow Mode
S11		

If the unit receives a startup signal, it will exit the snow-blowing function.

Pre-Start Check

- Check that the refrigerant pipe line and communication wire with indoor and outdoor unit have been connected to the same refrigeration system.
- Outdoor units require either 208/230-3-60 or 460-3-60 power. Verify that the power and phase requirements are correct and all three legs are present.
- Check that power source’s voltage is within 10% of the rated voltage.
- Check and confirm that the power and control wire are correctly connected.
- Check that the wired controllers are properly connected.
- Before powering on, confirm there is no short circuit for each line.
- Check that all units have passed a nitrogen pressure test for 24 hours.
- Provide the customer accurate “as-built” drawings and documents, including actual piping lengths and locations, unit addresses, settings, etc.
- Ensure additional refrigerant charge calculations are correct and that the system is charged accordingly.
- Energize the outdoor units for at least 24 hours before system startup to ensure proper oil temperature has been achieved.
- Ensure all refrigerant valves on the outdoor units are fully open. Ensure the oil balancing valves are open for 2 and 3-module systems. If these valves are not fully open equipment damage may occur.

PRE-START CHECK

- Make sure the refrigerant pipe line and communication wire with the indoor and outdoor unit are connected to the same refrigeration system.
- Outdoor units require either 208/230-3-60 or 460-3-60 power. Verify that the power and phase requirements are correct and all three legs are present.
- Check that the power source’s voltage is within 10% of the rated voltage.
- Check and confirm that the power and control wire are correctly connected.
- Check that the wired controllers are properly connected.
- Before powering on, confirm there are no short circuits for each line.
- Check that all units have passed a nitrogen pressure test for 24 hours.
- Provide the customer accurate “as-built” drawings and documents, including actual piping lengths and locations, unit addresses, settings, etc.
- Ensure additional refrigerant charge calculations are correct and that the system is charged accordingly.
- Energize the outdoor units for at least 24 hours before system startup to ensure proper oil temperature has been achieved.
- Ensure all refrigerant valves on the outdoor units are fully open; ensure the oil balancing valves are open for 2 and 3-module systems. If these valves are not fully open equipment damage may occur.

MAINTENANCE

⚠CAUTION

When servicing or repairing this unit, use only factory-approved service replacement parts. Refer to the rating plate on the unit for complete unit model number, serial number and company address. Any substitution of parts or controls not approved by the factory will be at the owner’s risk and may result in equipment damage.

⚠CAUTION

To avoid equipment damage, do not attempt to reuse any mechanical or electrical controllers that have been wet. Replace defective controller.

The following are recommended guidelines. Job site conditions may dictate that the maintenance schedule be performed more often than recommended here.

EVERY 3 MONTHS:

- Check the coil condition. Clean the coil if necessary.

EVERY 6 MONTHS:

Follow the 3-month maintenance schedule. In addition:

- Check for and remove debris that may have settled around the base of the outdoor unit.
- Check for proper condensate drainage (clear basepan).
- Eliminate any standing water inside the outdoor unit.

EVERY 12 MONTHS:

Follow 6-month maintenance schedule. In addition:

- Ensure all electrical connections are secure.
- Check the heating and cooling action to confirm proper operation.

© Carrier Corporation 2020