VRF Indoor Unit
40VMF018---3 — 4-Way Cassette

bryant
Heating & Cooling Systems

Submittal Data

Job Data _____ Location _____
Buyer _____ Buyer PO # _____ Carrier # _____
Unit Number _____ Model Number _____
Performance Data Certified By _____ Date _____

STANDARD FEATURES

- Delivers air in all four directions
- Knock Out for OA Opening
- Louver Control (Fixed or Swing)
- Three Fan Speeds – High, Medium and Low
- Built-in Condensate Lift Mechanism
- Built-in EXV (Electronic Expansion Valve) for Installation Ease

Indoor Unit Model		40VMF018---3
PERFORMANCE		
Cooling Rated Capacity	Btu/h	18,000
Heating Rated Capacity	Btu/h	21,000
Airflow (H / M / L)	CFM	650 / 500 / 400
Sound Pressure (H / M / L)	dBA	40.8 / 35.2 / 31.3
ELECTRICAL		
Power Supply	V/Ph/Hz	208-230/1/60
Indoor Fan Motor Power Consumption (Input)	W	35
Minimum Circuit Amps	A	0.98
Maximum Overcurrent Protection	A	15
Motor Type		DC

PHYSICAL DATA		
Pipe Connection Size - Liquid	in.	3/8 (OD)
Pipe Connection Size - Suction	in.	5/8 (OD)
Pipe Connection Size - Drain	in.	1-1/4 (OD)
Refrigerant		R-410A
Unit Width	in.	33-1/8
Unit Height	in.	9
Unit Depth	in.	33-1/8
Unit Net Weight	lbs.	54
Panel Width	in.	37-3/8
Panel Height	in.	1-3/4
Panel Depth	in.	37-3/8
Panel Net Weight	lbs.	13.2

ACCESSORIES (Optional)

- ☐ Wireless Remote Controller 40VM900001
- ☐ Wired Remote Controller - Non-Prog. 40VM900002
- ☐ Wired Remote Controller - Prog. 40VM900003
- ☐ Centralized Controller 40VM900004
- ☐ Touch Screen Wired Controller 40VM900005
- ☐ Touch Screen Central Controller 40VM900006

Manufacturer reserves the right to discontinue, or change at any time, specifications or designs without notice and without incurring obligations.

DIMENSIONAL DRAWING
INDOOR UNIT 4-WAY CASSETTE 40VMF018---3

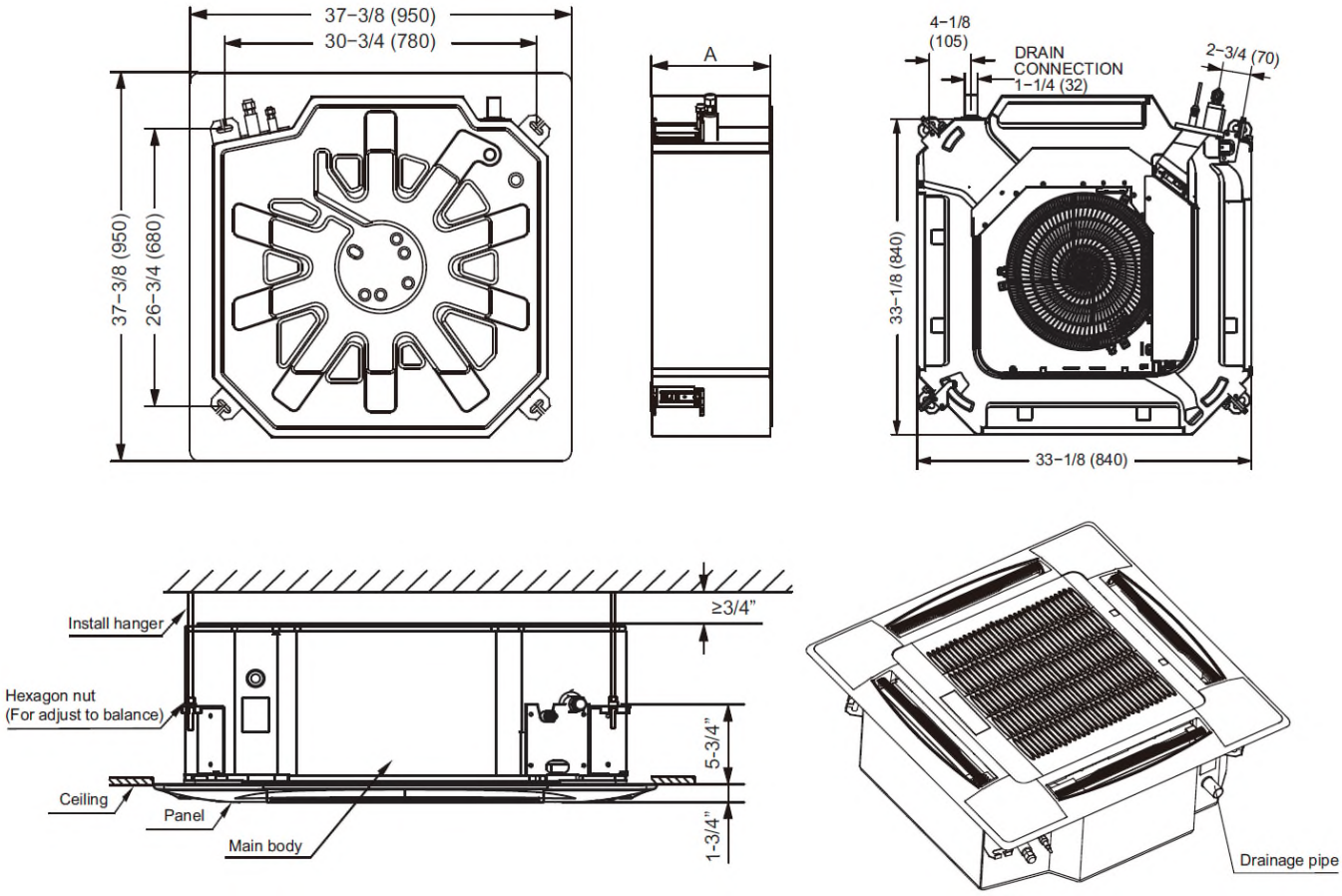

40VMF UNIT SIZE	DIMENSION (in.)
	A
018	9

NOTE: All dimensions shown in inches.

© Bryant Heating & Cooling Systems