VRF Indoor Unit
40VMI015---3—1-Way Cassette

bryant
Heating & Cooling Systems

Submittal Data

Job Name _____ Location _____
Tag _____

STANDARD FEATURES

- Three fan speeds - high, medium, and low
- Built-in condensate lift mechanism
- Condensate lift 27-1/2 inches
- Built in EXV (Electronic Expansion Valve) for installation ease
- Outside air connection
- Panel/grill (40VMI002----) - ordered separately

INDOOR UNIT MODEL		40VMI015---3
PERFORMANCE		
Total Cooling Rated Capacity	Btu/h	15,210
Sensible Cooling Capacity	Btu/h	10,660
Total Heating Rated Capacity	Btu/h	17,000
Airflow (H / M / L)	CFM	379 / 345 / 309
Sound Pressure (H / M / L)	dBA	40.7 / 38.1 / 36.3
ELECTRICAL		
Power Supply	V/Ph/Hz	208-230/1/60
Indoor Fan Motor Power Consumption (Input)	W	20
Minimum Circuit Amps (MCA)	A	0.44
Maximum Overcurrent Protection	A	15.0
Motor Type		DC

PHYSICAL DATA		
Pipe Connection Size - Liquid	in.	1/4 (OD)
Pipe Connection Size - Suction	in.	1/2 (OD)
Pipe Connection Size - Drain	in.	1 (OD)
Refrigerant		R-410A
Unit Width	in.	51-1/2
Unit Height	in.	7-1/2
Unit Depth	in.	18
Unit Net Weight	lbs.	38.8
Panel Width	in.	53
Panel Height	in.	1
Panel Depth	in.	19-3/4
Panel Net Weight	lbs.	8.82

ACCESSORIES

- ☐ Wireless Remote Controller 40VM900001
- ☐ Wired Remote Controller - Non-Prog. 40VM900012
- ☐ Wired Remote Controller - Prog. 40VM900013
- ☐ Touch Screen Wired Controller 40VM900005
- ☐ 24V Controller 40VM900008
- ☐ Button Sensor 40VM900009

Manufacturer reserves the right to discontinue, or change at any time, specifications or designs without notice and without incurring obligations.

DIMENSIONAL DRAWING
INDOOR UNIT 1-WAY CASSETTE 40VMI015---3

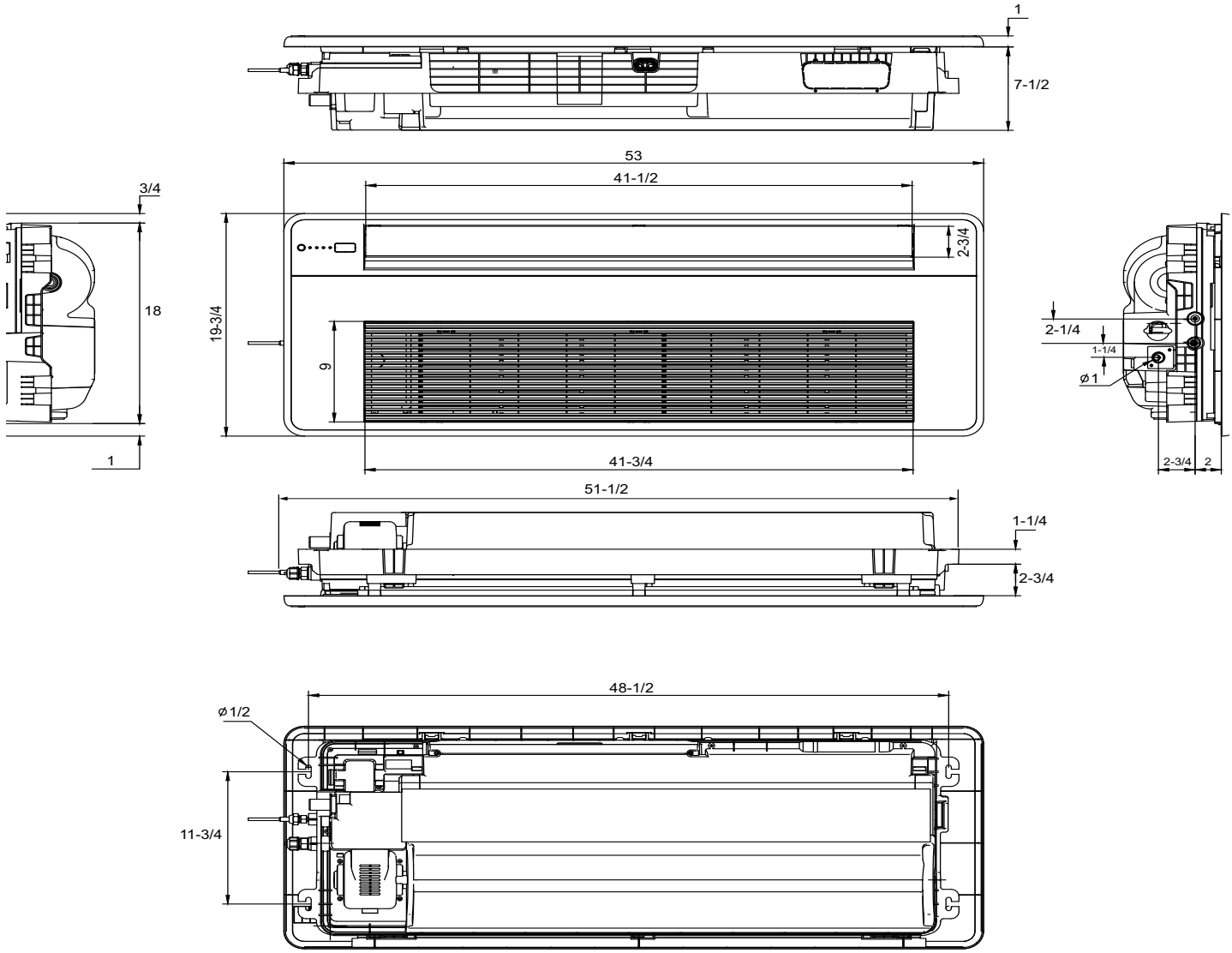

Dimensions are shown in inches.

Recommended Service / Maintenance Clearances

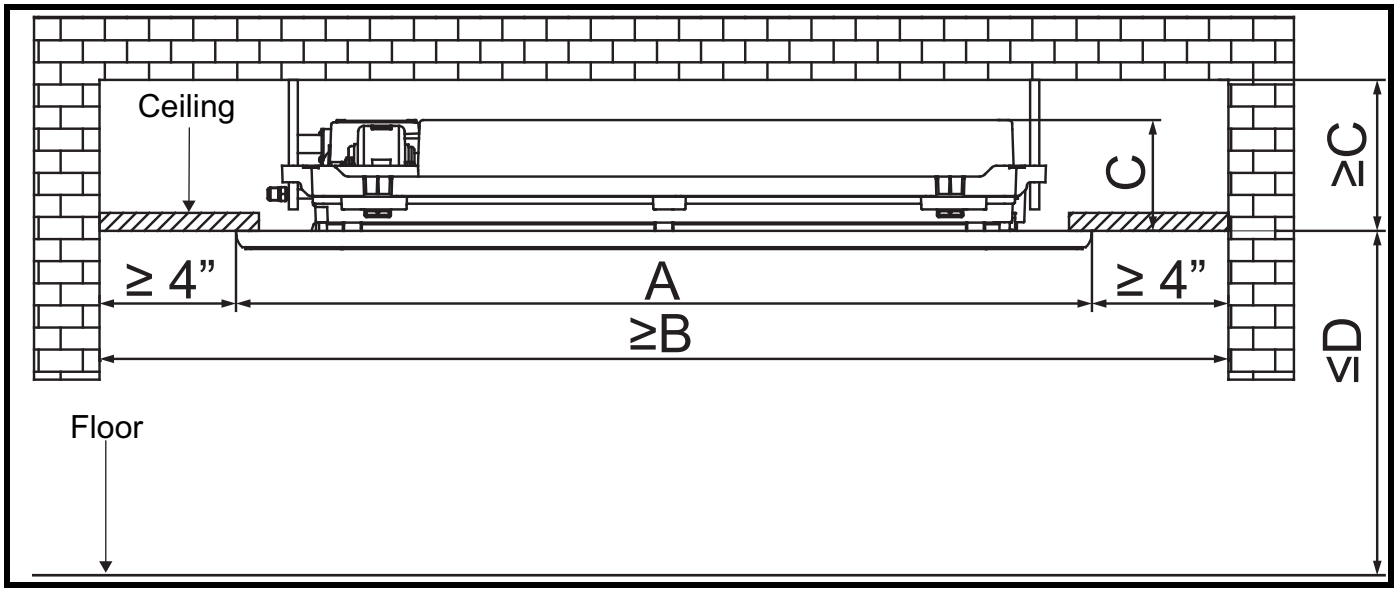

A	53
B	61
C	7-1/2
D	157-1/2

Distance from Wall or Obstruction

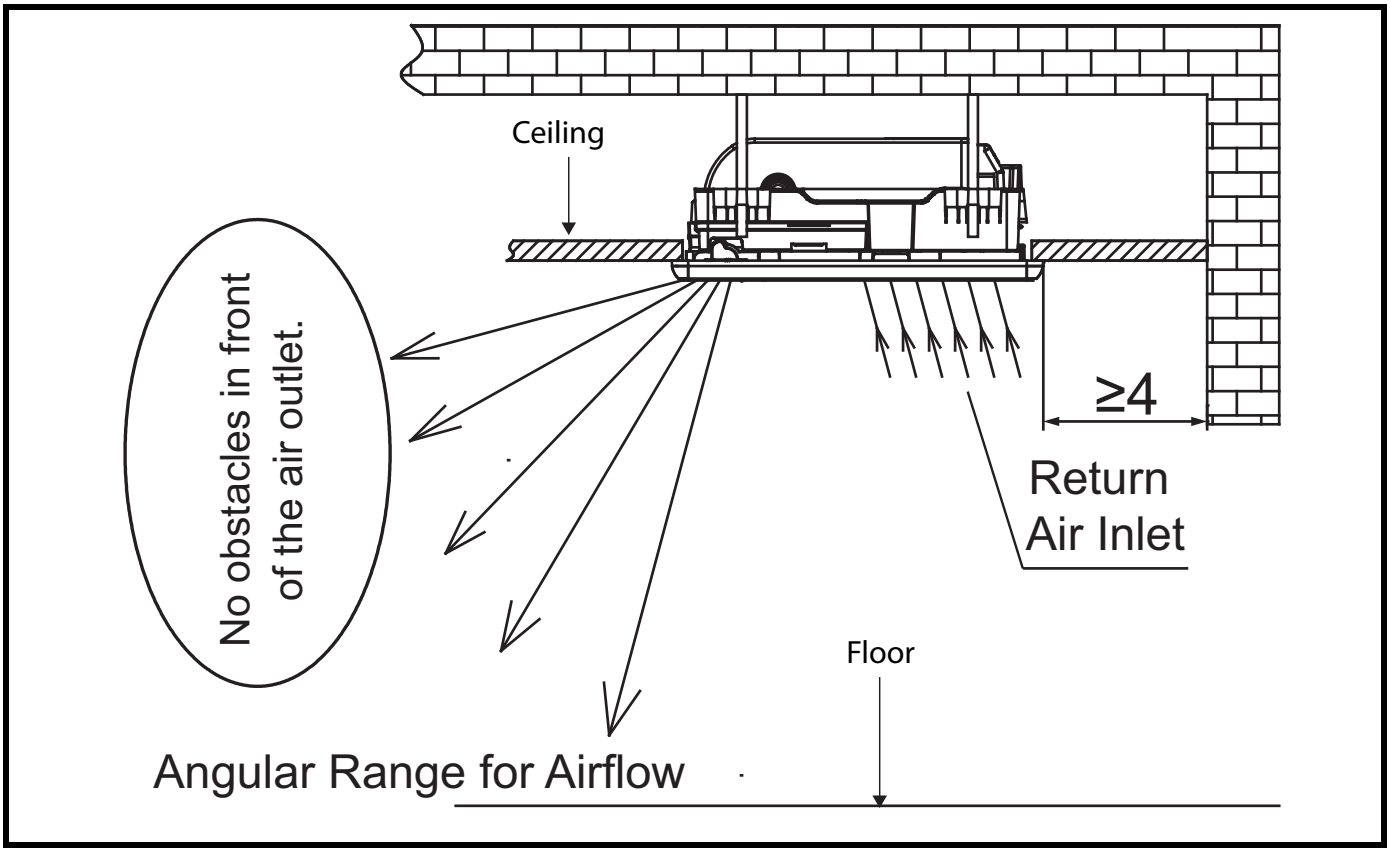

© Bryant Heating & Cooling Systems 2019