CUSTOMER: CARRIER CORPORATION

CUSTOMER ORDER NUMBER:

DISTRIBUTOR:

DISTRIBUTOR ORDER NUMBER:

PROJECT:

PROJECT ORDER NUMBER:

ROCKWELL AUTOMATION ORDER NUMBER: CARRIER

NOTE: SPECIFIC DRAWINGS WILL BE SUPPLIED TO EACH PARTICULAR ORDER.

SERIES NUMBER	UNIT NUMBER	EQUIPMENT DESCRIPTION	PAGE DESCRIPTION	SHEET
			PROJECT TITLE AND DRAWING INDEX	1
			GENERAL NOTES AND DEVICE DESIGNATIONS	2
			ONE LINE DIAGRAM AND KEY INTERLOCKING	3
			POWER WIRING INTERCONNECTIONS	4
			CONTROL WIRING INTERCONNECTIONS AND TERMINAL BLOCK LAYOUTS	5-6
XXXXXXX-XXX-13E	1A-2A	MEDIUM VOLTAGE AC DRIVE	LINE AND LOAD CONNECTIONS	7
			RECTIFIER, INVERTER AND COMMON MODE CHOKE	8
			MAIN COOLING FAN	9
			CONTROL POWER DISTRIBUTION	10
			GATE DRIVER POWER SUPPLIES	11
			OPTICAL INTERFACE BOARDS	12
			ANALOG CONTROL BOARD	13-14
			EXTERNAL I/O BOARD	15
			SYMBOL TABLE	16

THIS DRAWING IS THE PROPERTY OF ROCKWELL AUTOMATION, INC. OR ITS SUBSIDIARIES AND MAY NOT BE COPIED, USED OR DISCLOSED FOR ANY PURPOSE EXCEPT AS AUTHORIZED IN WRITING BY ROCKWELL AUTOMATION, INC.

CERTIFIED	DATE	REV	REVISION	INT	DATE
M.VARGAS		1	PRELIMINARY	JF	2013-06-28
DRAWN: JFILIPOVIC	DATE: 2013-06-28				

CUSTOMER: CARRIER CORPORATION
DISTRIBUTOR:
PROJECT:
ORDER NO.:

DESCRIPTION: DRAWING INDEX

BULLETIN: 7000A
SIZE: XXXA
Rockwell Automation
REV: 1
DWG. NO.: CARRIER-003-13E
SHEET 1 OF 16

Allen-Bradley

E-DH-C AutoCAD®

GENERAL NOTES

/1 REMOTE EQUIPMENT

/2 INTELLIVAC NOTES:
OUTPUT RELAY CONTACTS SHOWN WITHOUT CONTROL POWER APPLIED.
THE FOLLOWING FACTORY INSTALLED CONFIGURATION/POWER-UP STATES ARE IN EFFECT:
CONTACTOR STATUS - FAIL SAFE
MODULE STATUS - FAIL SAFE
DO NOT ADJUST DIP SWITCH SETTINGS
A LOAD RESISTOR MAY BE REQUIRED TO PREVENT A FALSE-TRUE CONDITION IF INPUTS ARE SOURCED FROM A TRIAC OUTPUT - SEE USER MANUAL.

/6 FOR CUSTOMER USE.

/7 MECHANICAL INTERLOCK

/8 CURRENT LIMITING

/66 CARRIER ISM TO BE PROGRAMMED BY CARRIER BEFORE START-UP.
RELAY CONTACTS SHOWN WITHOUT SIGNAL POWER APPLIED.

/67 COMPONENTS SIZED FOR LOAD DATA PROVIDED.

/72 WIRING SHOULD BE #12 AWG.

/100 WARNING:
GROUND MUST BE CONNECTED TO PREVENT HIGH VOLTAGES FROM BEING APPLIED TO DRIVE CONTROL BOARDS.

/101 LV CONTROL WIRING WITHIN THE VFD ENCLOSURE SHALL BE #16 AWG UNLESS OTHERWISE NOTED.

/102 LV CONTROL WIRING WITHIN THE VFD ENCLOSURE SHALL BE #16 AWG UNLESS OTHERWISE NOTED.
LV CONTROL WIRING WITHIN THE AUXILIARY UNITS SHALL BE #14 AWG UNLESS OTHERWISE NOTED.
LV CONTROL WIRING BETWEEN THE UNITS SHALL BE #14 AWG UNLESS OTHERWISE NOTED.

/104 LOCATED IN DRIVE LOW VOLTAGE CONTROL SECTION.

/105 DEVICE IS MOUNTED ON THE LOW VOLTAGE DOOR OF THE DRIVE.

/110 PROVISION FOR REMOTE EMERGENCY STOP, CUSTOMER SUPPLIED. REMOVE JUMPER WHEN INSTALLING REMOTE EMERGENCY STOP. WHEN THERE IS MORE THAN ONE REMOTE EMERGENCY STOP CUSTOMER MUST WIRE IN SERIES. EMERGENCY STOP PUSH BUTTON MUST HAVE A MAINTAINED CONTACT.

/158 LOOP WIRE ONCE THROUGH FERRITE.

DEVICE DESIGNATIONS

1M	START RELAY
ACB	ANALOG CONTROL BOARD
APx	AIR PRESSURE DIFFERENTIAL TRANSDUCER
CBx	CIRCUIT BREAKER
CMC	COMMON MODE CHOKE
CPTx	CONTROL POWER TRANSFORMER
CTx	CURRENT TRANSFORMER
DI	DRIVE INPUT CONTACTOR
DI-IV	DRIVE INPUT CONTACTOR INTELLIVAC MODULE
DIC	DRIVE INPUT CONTROL RELAY
DICR1	DRIVE INPUT CONTACTOR PILOT RELAY
DIIS	DRIVE INPUT ISOLATING SWITCH
DILR	DRIVE INPUT LINE REACTOR
DIM	DRIVE IDENTITY MODULE
DITB	DRIVE INPUT CONTACTOR TERMINAL BLOCKS
DPM	DRIVE PROCESSOR MODULE
DTBx	DRIVE TERMINAL BLOCKS
EMC	ELECTRO-MAGNETIC CHOKE
ES	ETHERNET SWITCH
FLT	FAULT RELAY
FPT	FAN POWER TRANSFORMER
Fx	FUSE
GFC	GATE FIRING CIRCUIT
GFCT	GROUND FAULT CURRENT TRANSFORMER
HECSDC1	HALL EFFECT CURRENT SENSOR (DC LINK)
HECSU	HALL EFFECT CURRENT SENSOR (U PHASE)
HECSW	HALL EFFECT CURRENT SENSOR (W PHASE)
HPR	HIGH PRESSURE RELAY
IFM	INTERFACE MODULE
IGDPSx	ISOLATED GATE DRIVE POWER SUPPLY
INV	INVERTER
ISM	INTEGRATED STARTER MODULE
LFC	LINE FILTER CAPACITORS
LRFN	LINE REACTOR FAN
MFC	MOTOR FILTER CAPACITORS
MFN1	MAIN COOLING FAN
MFN1C	MAIN FAN CONTACTOR
MFN1MP	MAIN FAN MOTOR PROTECTOR
MOV	METAL OXIDE VARISTOR
MSR	MONITORING SAFETY RELAY
MSRXx	MONITORING SAFETY RELAY AUXILIARY RELAY x
MTR	MOTOR
NR	NEUTRAL RESISTOR
OI	OPERATOR INTERFACE
OIBBI	OPTIC INTERFACE BASE BOARD (INVERTER SIDE)
OIBBR	OPTIC INTERFACE BASE BOARD (RECTIFIER SIDE)
OIBI	OPTIC INTERFACE BOARD (INVERTER SIDE)
OIBR	OPTIC INTERFACE BOARD (RECTIFIER SIDE)
PFNI	POWERFLEX INTERFACE BOARD
PP	CARRIER POWER PANEL
PS1A	AC/DC CONVERTER
PS2	DC/DC CONVERTER
PS4	AC/DC CONVERTER
REC	RECTIFIER
RJ45	ETHERNET PORT
RUN	RUN RELAY
Rx	RESISTOR
SA	SURGE ARRESTOR
SN	SNUBBER NETWORK
SS	SURGE SUPPRESSOR
ST	SHUNT TRIP RELAY
SWx	SWITCH

TFBx	TEMPERATURE FEEDBACK BOARD
VSBx	VOLTAGE SENSING BOARD
WRN	WARNING RELAY
XIOx	EXTERNAL INPUTS/OUTPUTS

COLOUR DESIGNATIONS

A	AMBER
BLK	BLACK
B	BLUE
BR	BROWN
C	CLEAR
G	GREEN
ORG	ORANGE
R	RED
W	WHITE
Y	YELLOW

ABBREVIATIONS

AC	ALTERNATING CURRENT
DC	DIRECT CURRENT
GND	GROUND
LV	LOW VOLTAGE
MV	MEDIUM VOLTAGE
PE	EARTH GROUND
SG	SAFETY GROUND
TE	SIGNAL GROUND

WIRE NUMBERING FOR SINGLE PHASE CIRCUITS

CIRCUIT OR DEVICE	DESIGNATED NUMBERS	LAST NUMBER USED
DRIVE ASSOCIATED STARTERS	1-199	160B
AC POWER SUPPLY CIRCUIT AND Ø1 FANS	200-299	215A
DC POWER SUPPLY CIRCUIT	300-399	311
AC CONTROL CIRCUIT	400-499	405A
ACB I/O	500-599	507A
XIO1 I/O	600-699	638B
XIO2 I/O	700-799	N/A
XIO3 I/O	800-899	N/A
PLC	900-999	N/A
SPACE HEATER(S)	1000-1099	N/A
MISC	1100-1199	1111A

ALL INTERCONNECTIONS BETWEEN DRIVE AND ASSOCIATED UNITS WILL BE TAGGED WITH IDENTICAL NUMBERS AT EACH END.
CONTROL INTERCONNECTIONS WILL BE PREFIXED WITH THE DESTINATION DESIGNATION.
POWER INTERCONNECTIONS WILL BE PREFIXED WITH THE SOURCE DESIGNATION.

D-300
DESIGNATION WIRE NUMBER

THIS DRAWING IS THE PROPERTY OF ROCKWELL AUTOMATION, INC. OR ITS SUBSIDIARIES AND MAY NOT BE COPIED, USED OR DISCLOSED FOR ANY PURPOSE EXCEPT AS AUTHORIZED IN WRITING BY ROCKWELL AUTOMATION, INC.

CERTIFIED	DATE	REV	REVISION	INT	DATE
M.VARGAS		1	PRELIMINARY	JF	2013-06-28
DRAWN J.FILIPOVIC	DATE 2013-06-28				

CUSTOMER: CARRIER CORPORATION
DISTRIBUTOR:
PROJECT:
ORDER NO.

DESCRIPTION: GENERAL NOTES AND DEVICE DESIGNATIONS

BULLETIN 7000A
SIZE XXXA
REV 1
Rockwell Automation
DWG. NO. CARRIER-003-13E
SHEET 2 OF 16

Allen-Bradley

E-DH-C AutoCAD®

KEY INTERLOCK SYSTEM SUPPLIED BY ROCKWELL AUTOMATION

DANGER

SYSTEM INTEGRITY DEPENDS ON HAVING ONLY ONE KEY FOR EACH INTERCHANGE DESIGNATION. IF MORE KEYS ARE AVAILABLE THE INTERLOCKING INTEGRITY IS LOST. SAFETY OF PERSONNEL AND EQUIPMENT WILL BE AFFECTED.

THE CUSTOMER MUST ENSURE THAT HIS CONFIGURATION OF THIS EQUIPMENT INTO HIS SYSTEM DOES NOT RESULT IN DAMAGE TO THIS EQUIPMENT. THE SYSTEM SHOWN HERE IS DESIGNED TO ACHIEVE THE FUNCTION DESCRIBED BELOW.

DANGER

OBSERVE CAPACITOR DANGER LABELS ON DOORS. EXTERNAL CONTROL VOLTAGES WILL BE PRESENT. SEE DIAGRAMS.

FUNCTION

THE KEY INTERLOCK SYSTEM PREVENTS ACCESS TO THE MEDIUM VOLTAGE SECTIONS OF THE POWERFLEX 7000 DRIVE UNTIL THE MEDIUM VOLTAGE SUPPLY IS LOCKED OFF AT THE DRIVE INPUT CONTACTOR UNIT.

TO GAIN ACCESS TO THE DRIVE MEDIUM VOLTAGE SECTIONS

1) IF THE DRIVE IS RUNNING THE MOTOR, FIRST STOP THE MOTOR.
2) OPEN THE INPUT CONTACTOR BY PRESSING DRIVE EMERGENCY STOP.
3) OPEN THE INPUT ISOLATING SWITCH. LOCK IT OPEN AND REMOVE KEY K1.
4) INSERT KEY K1 INTO THE KEY DOOR LOCK IN THE DRIVE INVERTER/RECTIFIER SECTION. THIS DOOR CAN NOW BE UNLOCKED.
5) TO RESTORE EQUIPMENT TO ORIGINAL SERVICE POSITION, REVERSE THE ABOVE STEPS.

CABLE INSULATION REQUIREMENTS FOR 'DIRECT TO DRIVE' TECHNOLOGY

SYSTEM VOLTAGE	CABLE INSULATION RATING (kV) (MAXIMUM PEAK LINE-TO-GROUND)	
	LINE SIDE	MACHINE SIDE
2400	> 2.2	> 2.2
3000	> 2.75	> 2.75
3300	> 3.0	> 3.0
4160	> 3.8	> 3.8
6000	> 5.5	> 5.5
6300	> 5.8	> 5.8
6600	> 6.0	> 6.0

LEGEND

L-O LOCKED OPEN

L-C LOCKED CLOSED

(K) KEY INTERLOCK ON ISOLATION SWITCH

[K] KEY INTERLOCK ON MV DOOR

(K)(K) MULTIPLE BARREL KEY INTERLOCK ON ISOLATION SWITCH

[K][K] MULTIPLE BARREL KEY INTERLOCK ON MV DOOR

[K][K][K][K] TRANSFER BLOCK

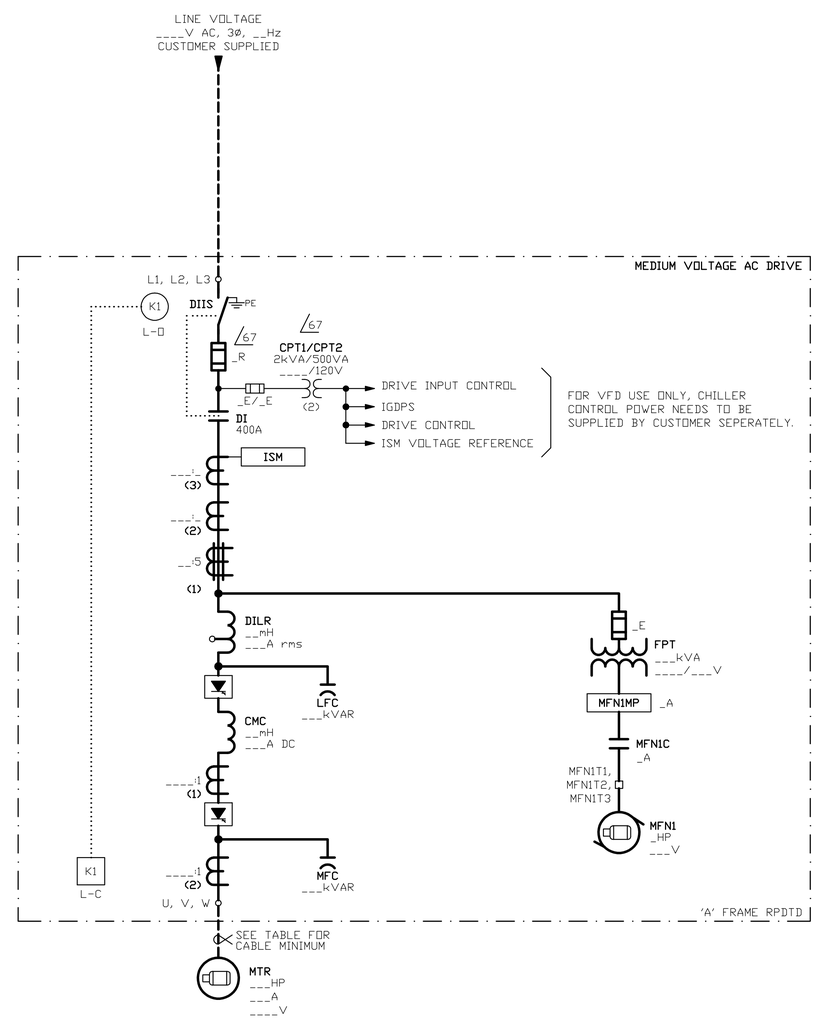

THIS DRAWING IS THE PROPERTY OF ROCKWELL AUTOMATION, INC. OR ITS SUBSIDIARIES AND MAY NOT BE COPIED, USED OR DISCLOSED FOR ANY PURPOSE EXCEPT AS AUTHORIZED IN WRITING BY ROCKWELL AUTOMATION, INC.

CERTIFIED	DATE	REV	REVISION	INT	DATE
M.VARGAS		1	PRELIMINARY	JF	2013-06-28
DRAWN JFILIPOVIC	DATE 2013-06-28				

CUSTOMER: CARRIER CORPORATION
DISTRIBUTOR
PROJECT
ORDER NO.

DESCRIPTION: ONE LINE DIAGRAM

BULLETIN 7000A
SIZE XXXA
Rockwell Automation
REV 1
DWG. NO. CARRIER-003-13E
SHEET 3 OF 16

Allen-Bradley

E-DH-C AutoCAD®

MEDIUM VOLTAGE AC DRIVE
7000A-____D_-RPDTD
SERIES XXXXXXX-XXX-13E

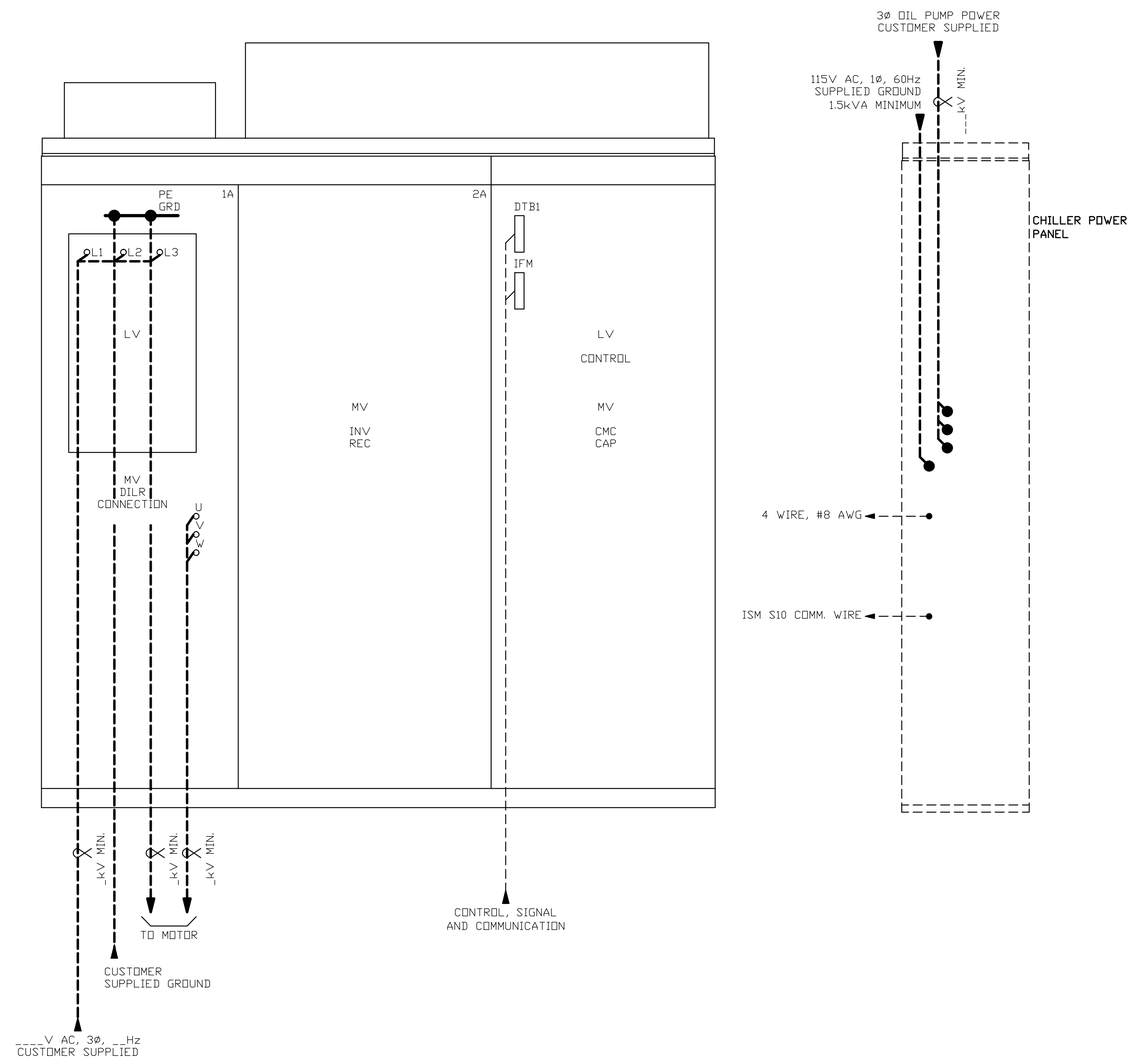

THIS DRAWING IS THE PROPERTY OF ROCKWELL AUTOMATION, INC. OR ITS SUBSIDIARIES AND MAY NOT BE COPIED, USED OR DISCLOSED FOR ANY PURPOSE EXCEPT AS AUTHORIZED IN WRITING BY ROCKWELL AUTOMATION, INC.

CERTIFIED	DATE	REV	REVISION	INT	DATE
M.VARGAS		1	PRELIMINARY	JF	2013-06-28
DRAWN: JFILIPOVIC	DATE: 2013-06-28				

CUSTOMER: CARRIER CORPORATION
DISTRIBUTOR:
PROJECT:
ORDER NO.

DESCRIPTION: POWER WIRING INTERCONNECTIONS AND KEY INTERLOCKING

BULLETIN: 7000A
SIZE: XXXA
REV: 1
DWG. NO.: CARRIER-003-13E
SHEET 4 OF 16

Allen-Bradley
Rockwell Automation

E-DH-C
AutoCAD®

MEDIUM VOLTAGE DRIVE

SERIES XXXXXXX-XXX-13E

NOTE: WIRING BETWEEN DRIVE INPUT STARTER AND DRIVE TO BE DONE BY CUSTOMER.

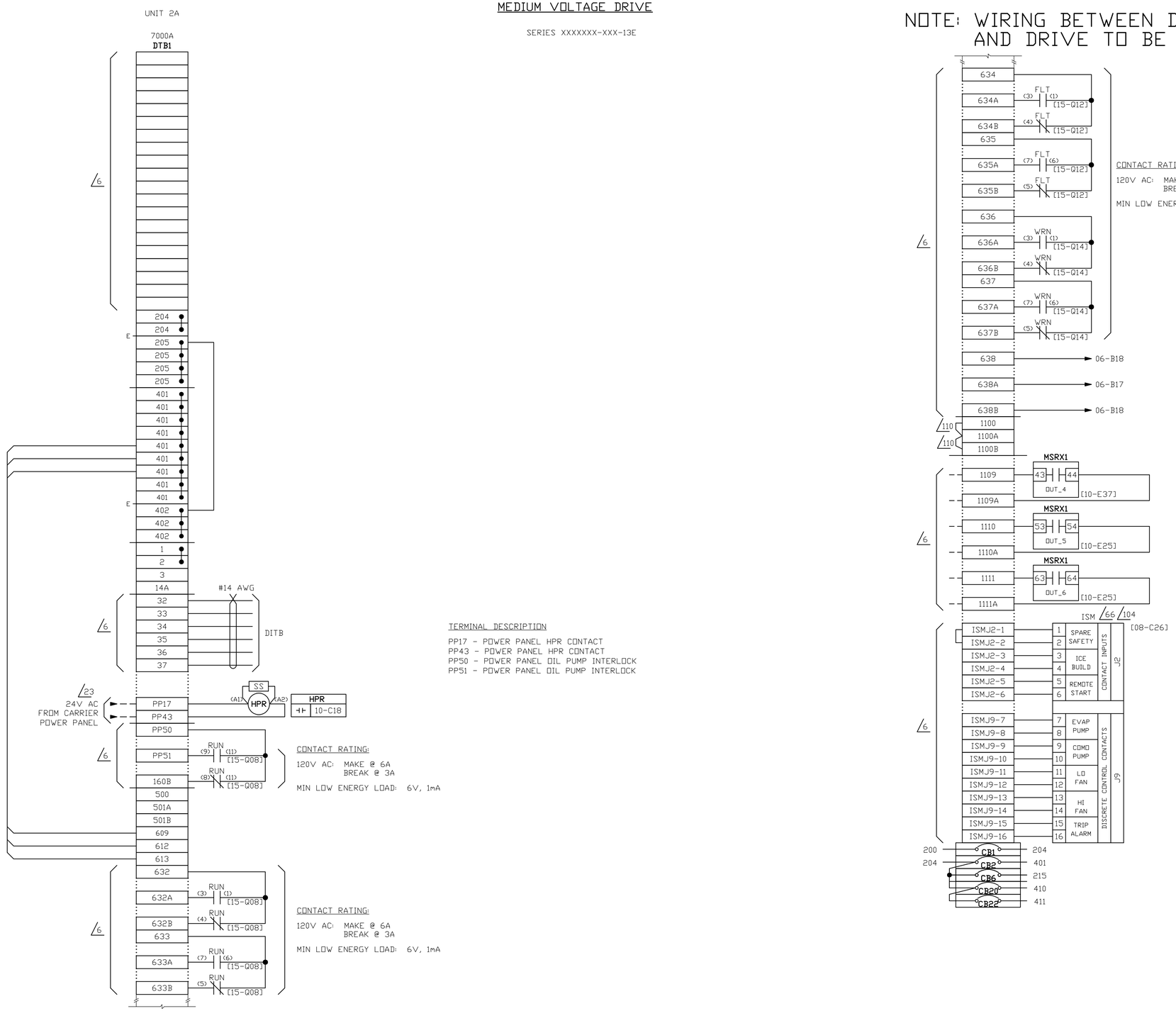

TERMINAL DESCRIPTION

PP17 - POWER PANEL HPR CONTACT
PP43 - POWER PANEL HPR CONTACT
PP50 - POWER PANEL OIL PUMP INTERLOCK
PP51 - POWER PANEL OIL PUMP INTERLOCK

THIS DRAWING IS THE PROPERTY OF ROCKWELL AUTOMATION, INC. OR ITS SUBSIDIARIES AND MAY NOT BE COPIED, USED OR DISCLOSED FOR ANY PURPOSE EXCEPT AS AUTHORIZED IN WRITING BY ROCKWELL AUTOMATION, INC.

CERTIFIED	DATE	REV	REVISION	INT	DATE
M.VARGAS		1	PRELIMINARY	JF	2013-06-28
DRAWN JFILIPOVIC	DATE 2013-06-28				

CUSTOMER: CARRIER CORPORATION
DISTRIBUTOR:
PROJECT:
ORDER NO.

DESCRIPTION: CONTROL WIRING INTERCONNECTIONS AND TERMINAL BLOCK LAYOUTS

BULLETIN 7000A
SIZE XXXA
Rockwell Automation
REV 1
DWG. NO. CARRIER-003-13E
SHEET 5
OF 16

Allen-Bradley

E-IM-C

AutoCAD®

MEDIUM VOLTAGE DRIVE

SERIES XXXXXXX-XXX-13E

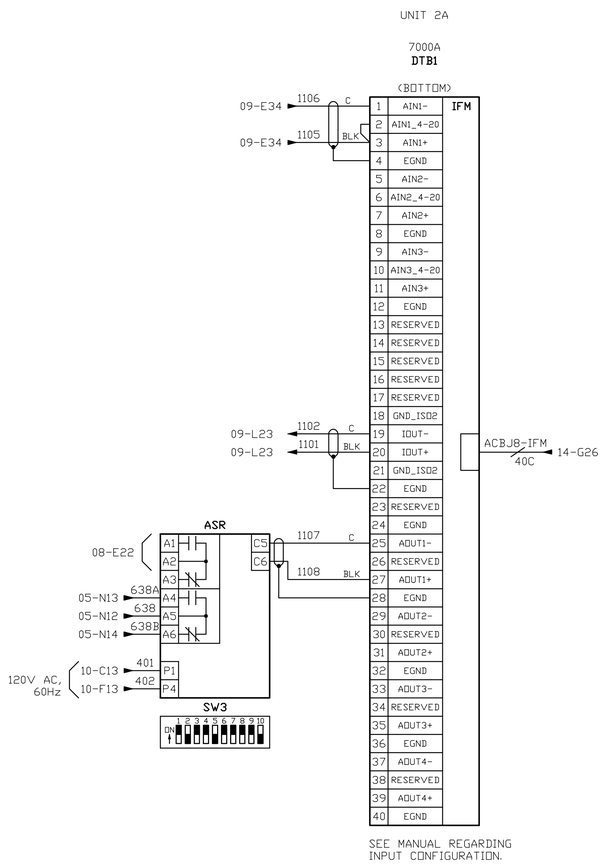

SEE MANUAL REGARDING INPUT CONFIGURATION.

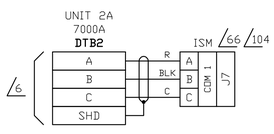

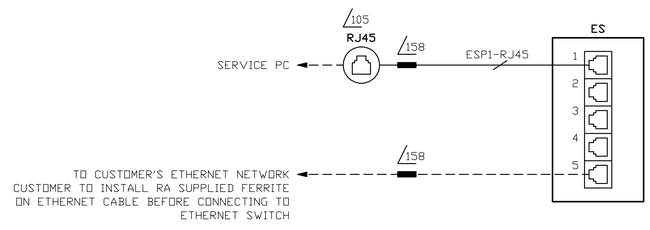

/ SEE SHT.2

ROCKWELL AUTOMATION USE TERMINAL BLOCKS

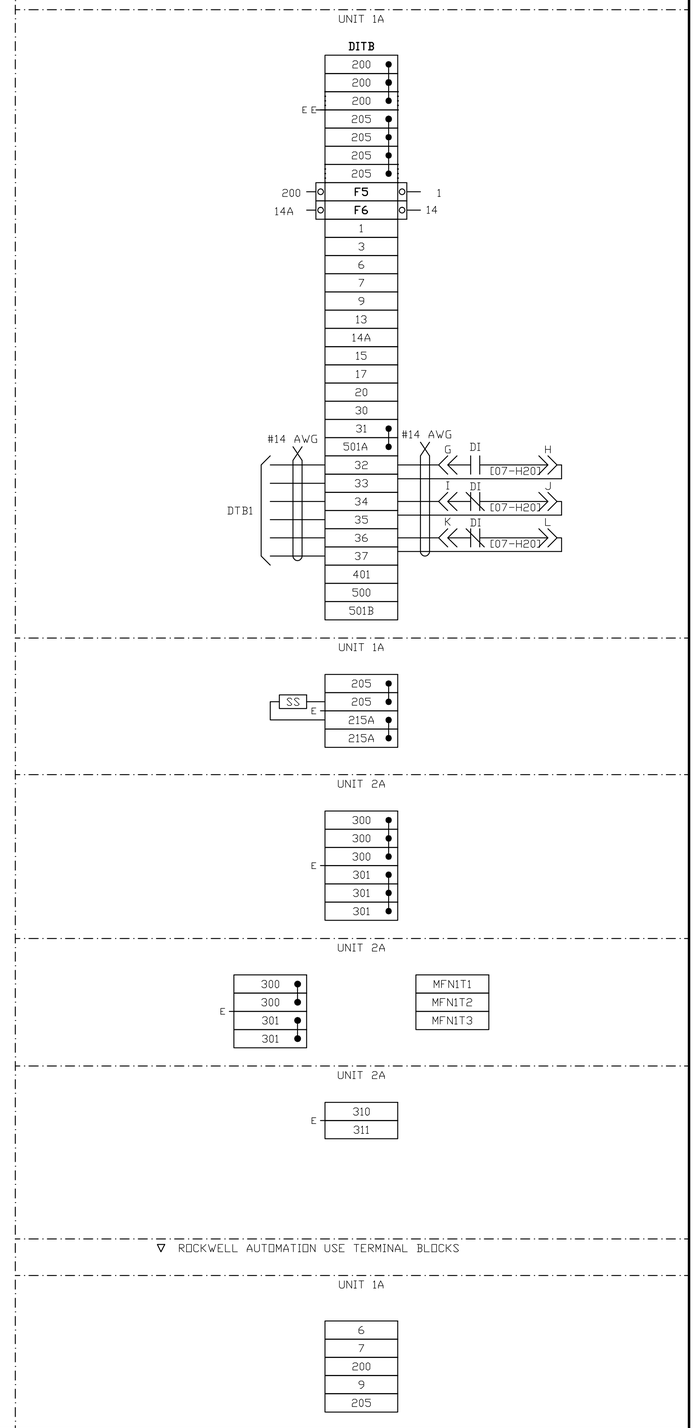

THIS DRAWING IS THE PROPERTY OF ROCKWELL AUTOMATION, INC. OR ITS SUBSIDIARIES AND MAY NOT BE COPIED, USED OR DISCLOSED FOR ANY PURPOSE, EXCEPT AS AUTHORIZED IN WRITING BY ROCKWELL AUTOMATION, INC.

CERTIFIED	DATE	REV	REVISION	INT	DATE
M.VARGAS		1	PRELIMINARY	JF	2013-06-28
DRAWN JFILIPOVIC	DATE 2013-06-28				

CUSTOMER: CARRIER CORPORATION
DISTRIBUTOR:
PROJECT:
ORDER NO.

DESCRIPTION: CONTROL WIRING INTERCONNECTIONS AND TERMINAL BLOCK LAYOUTS

BULLETIN 7000A
SIZE XXXA
REV 1
DWG. NO. CARRIER-003-13E
SHEET 6 OF 16

Rockwell Automation — Allen-Bradley

E-DH-C AutoCAD®

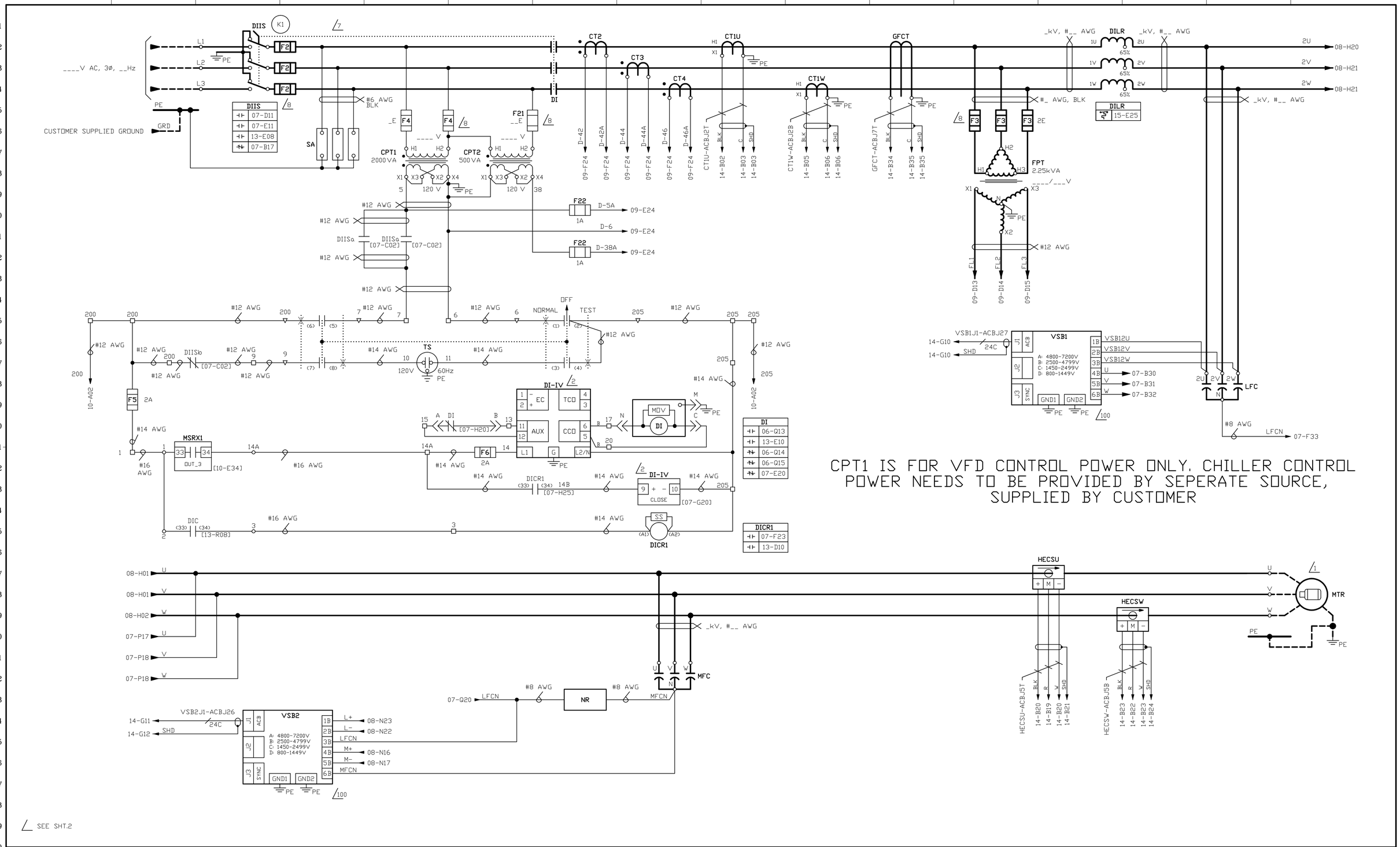

THIS DRAWING IS THE PROPERTY OF ROCKWELL AUTOMATION, INC. OR ITS SUBSIDIARIES AND MAY NOT BE COPIED, USED OR DISCLOSED FOR ANY PURPOSE EXCEPT AS AUTHORIZED IN WRITING BY ROCKWELL AUTOMATION, INC.

CERTIFIED	DATE	REV	REVISION	INT	DATE
M.VARGAS		1	PRELIMINARY	JF	2013-06-28
DRAWN: JFILIPOVIC	DATE: 2013-06-28				

CUSTOMER: CARRIER CORPORATION
DISTRIBUTOR:
PROJECT:
ORDER NO.

DESCRIPTION: MEDIUM VOLTAGE AC DRIVE

BULLETIN: 7000A
SIZE: XXXA
Rockwell Automation
REV: 1
DWG. NO.: CARRIER-003-13E
SHEET 7 OF 16

Allen-Bradley

E-DH-C AutoCAD®

NOTE: NO CUSTOMER WIRING ON THIS PAGE

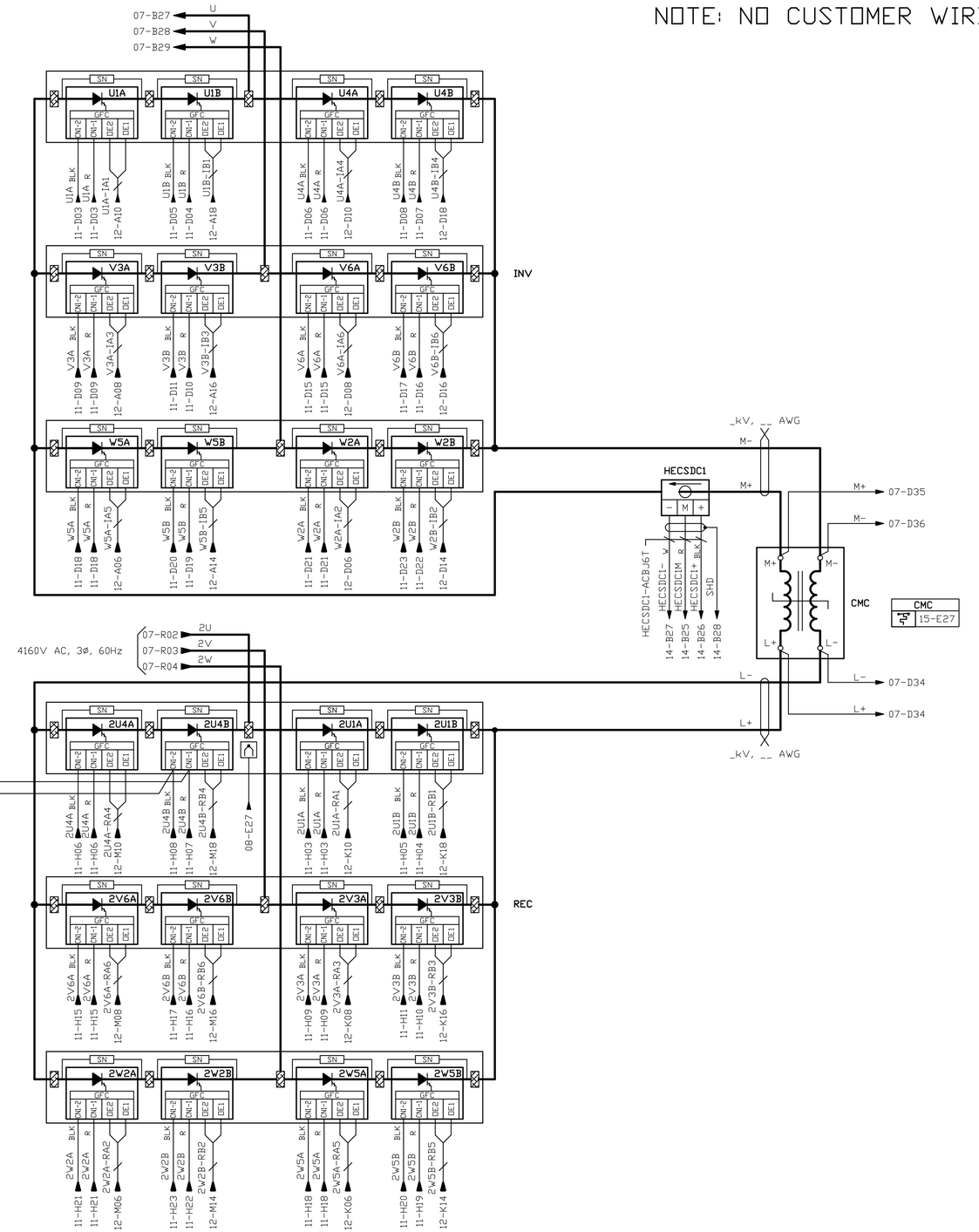

THIS DRAWING IS THE PROPERTY OF ROCKWELL AUTOMATION, INC. OR ITS SUBSIDIARIES AND MAY NOT BE COPIED, USED OR DISCLOSED FOR ANY PURPOSE EXCEPT AS AUTHORIZED IN WRITING BY ROCKWELL AUTOMATION, INC.	CERTIFIED M.VARGAS	DATE	REV 1	REVISION PRELIMINARY	INT JF	DATE 2013-06-28	CUSTOMER CARRIER CORPORATION	ORDER NO.	DESCRIPTION MEDIUM VOLTAGE AC DRIVE	BULLETIN 7000A	Allen-Bradley	
	DRAWN JFILIPOVIC	DATE 2013-06-28					DISTRIBUTOR			SIZE XXXA		
							PROJECT			Rockwell Automation	REV 1	DWG. NO. CARRIER-003-13E	SHEET 8 OF 16

E-DH-C

AutoCAD®

NOTE: NO CUSTOMER WIRING ON THIS PAGE

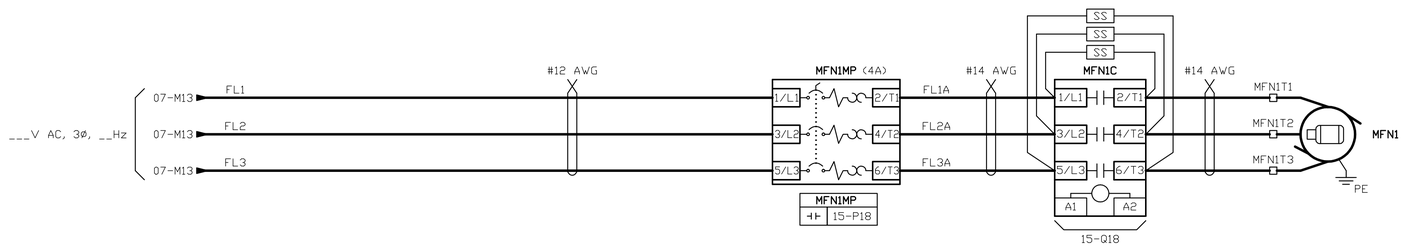

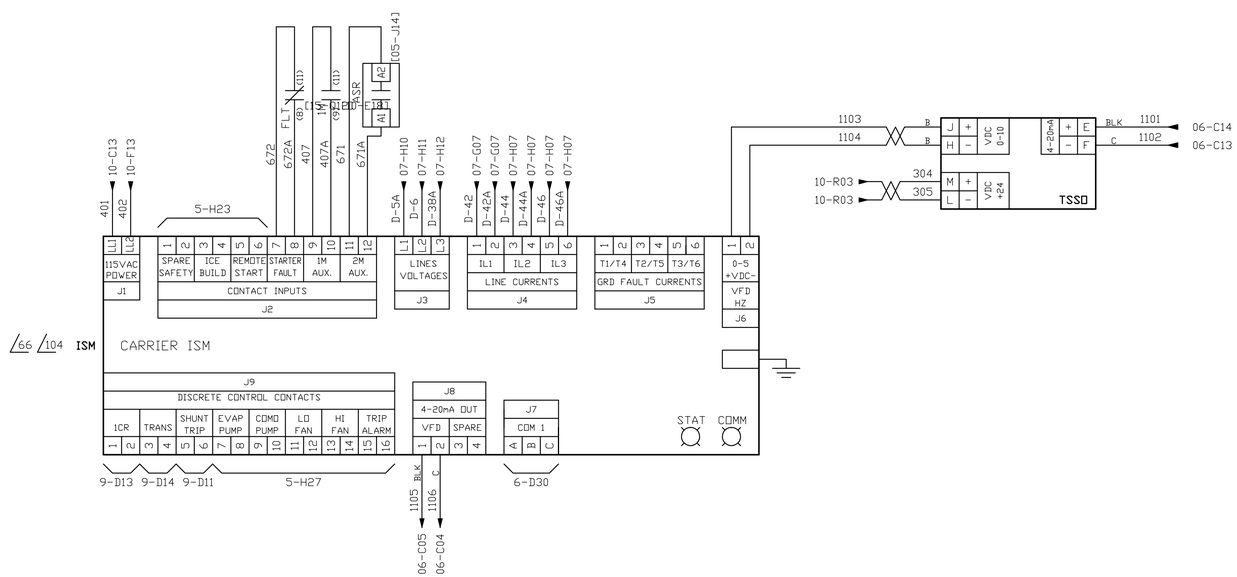

SEE SHT.2

THIS DRAWING IS THE PROPERTY OF ROCKWELL AUTOMATION, INC. OR ITS SUBSIDIARIES AND MAY NOT BE COPIED, USED OR DISCLOSED FOR ANY PURPOSE EXCEPT AS AUTHORIZED IN WRITING BY ROCKWELL AUTOMATION, INC.

CERTIFIED	DATE	REV	REVISION	INT	DATE
M.VARGAS		1	PRELIMINARY	JF	2013-06-28
DRAWN JFILIPOVIC	DATE 2013-06-28				

CUSTOMER: CARRIER CORPORATION
DISTRIBUTOR:
PROJECT:
ORDER NO.

DESCRIPTION: MEDIUM VOLTAGE AC DRIVE

BULLETIN 7000A
SIZE XXXA
Rockwell Automation
REV 1
DWG. NO. CARRIER-003-13E
SHEET 9
OF 16

Allen-Bradley

E-DH-C AutoCAD®

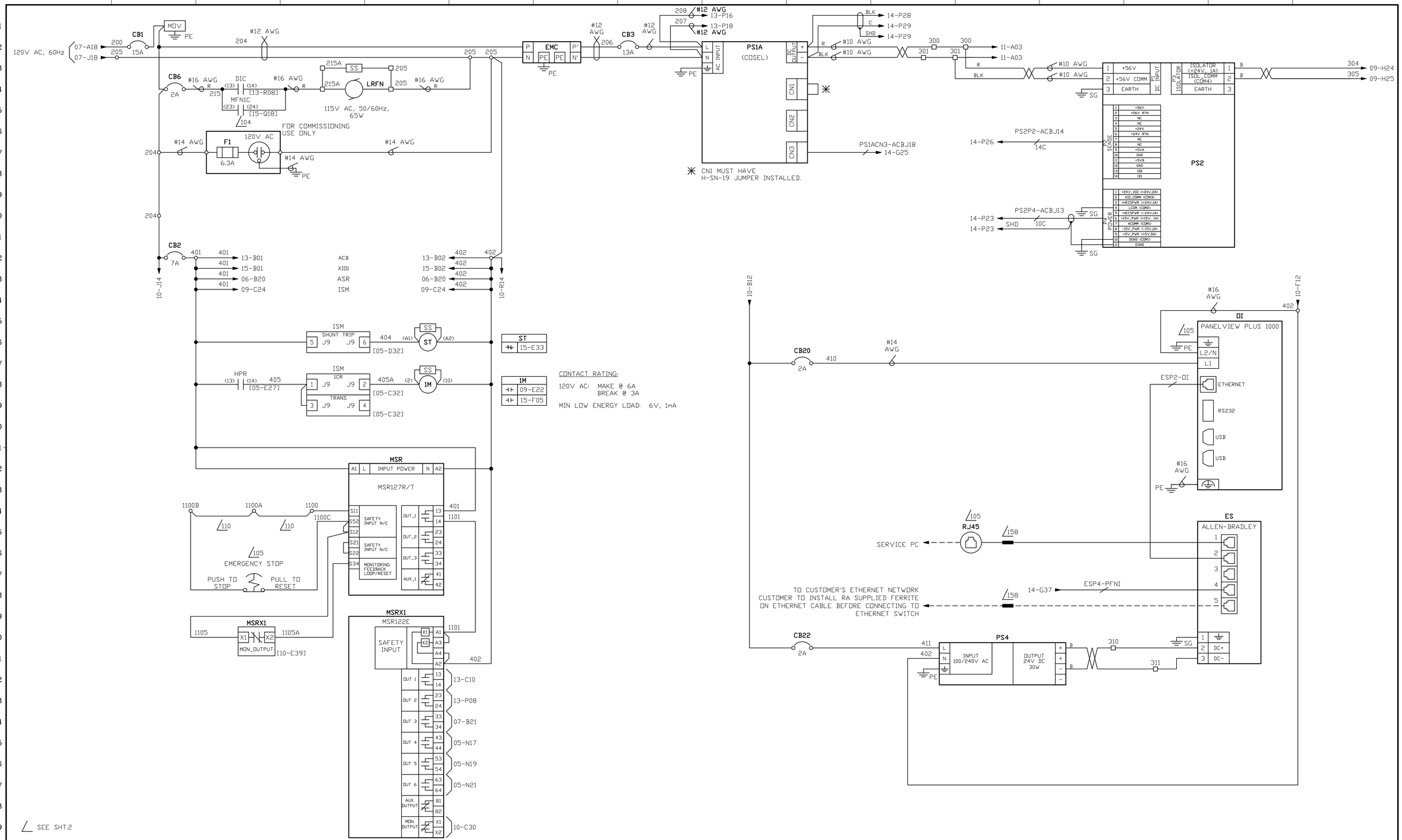

THIS DRAWING IS THE PROPERTY OF ROCKWELL AUTOMATION, INC. OR ITS SUBSIDIARIES AND MAY NOT BE COPIED, USED OR DISCLOSED FOR ANY PURPOSE EXCEPT AS AUTHORIZED IN WRITING BY ROCKWELL AUTOMATION, INC.

CERTIFIED	DATE	REV	REVISION	INT	DATE
M.VARGAS		1	PRELIMINARY	JF	2013-06-28
DRAWN: JFILIPOVIC	DATE: 2013-06-28				

CUSTOMER: CARRIER CORPORATION
DISTRIBUTOR:
PROJECT:
ORDER NO.

DESCRIPTION: MEDIUM VOLTAGE AC DRIVE

BULLETIN 7000A
SIZE XXXA
Rockwell Automation
REV 1
DWG. NO. CARRIER-003-13E
SHEET 10 OF 16

Allen-Bradley

E-DH-C

AutoCAD®

NOTE: NO CUSTOMER WIRING ON THIS PAGE

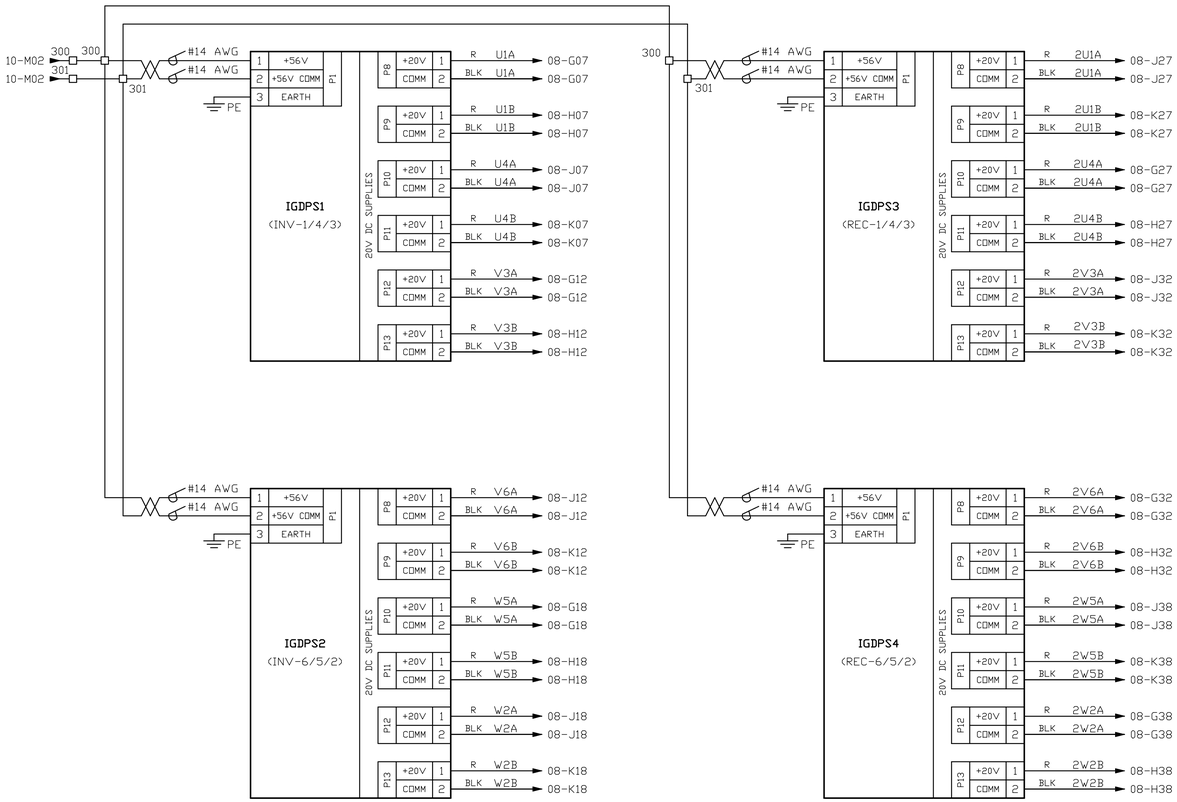

THIS DRAWING IS THE PROPERTY OF ROCKWELL AUTOMATION, INC. OR ITS SUBSIDIARIES AND MAY NOT BE COPIED, USED OR DISCLOSED FOR ANY PURPOSE EXCEPT AS AUTHORIZED IN WRITING BY ROCKWELL AUTOMATION, INC.

CERTIFIED	DATE	REV	REVISION	INT	DATE
M.VARGAS		1	PRELIMINARY	JF	2013-06-28
DRAWN: JFILIPOVIC	DATE: 2013-06-28				

CUSTOMER: CARRIER CORPORATION
DISTRIBUTOR:
PROJECT:
ORDER NO.:

DESCRIPTION: MEDIUM VOLTAGE AC DRIVE

BULLETIN: 7000A
SIZE: XXXA
Rockwell Automation
REV: 1
DWG. NO.: CARRIER-003-13E
SHEET 11 OF 16

Allen-Bradley

E-DH-C AutoCAD®

NOTE: NO CUSTOMER WIRING ON THIS PAGE

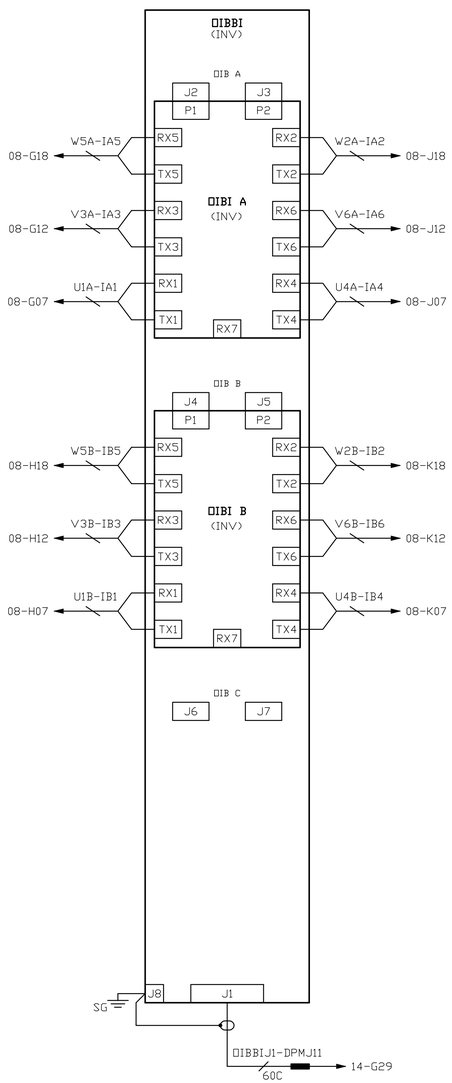

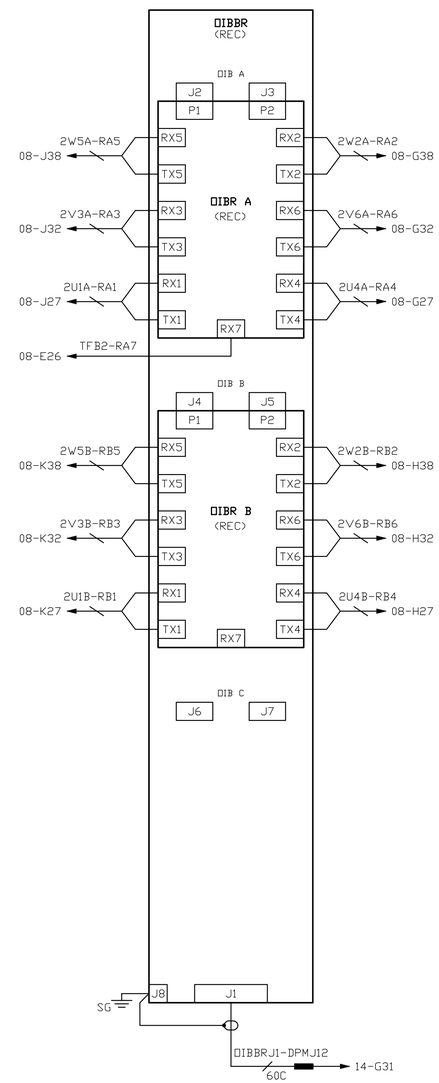

THIS DRAWING IS THE PROPERTY OF ROCKWELL AUTOMATION, INC. OR ITS SUBSIDIARIES AND MAY NOT BE COPIED, USED OR DISCLOSED FOR ANY PURPOSE EXCEPT AS AUTHORIZED IN WRITING BY ROCKWELL AUTOMATION, INC.

CERTIFIED	DATE	REV	REVISION	INT	DATE
M.VARGAS		1	PRELIMINARY	JF	2013-06-28
DRAWN JFILIPOVIC	DATE 2013-06-28				

CUSTOMER: CARRIER CORPORATION
DISTRIBUTOR:
PROJECT:
ORDER NO.

DESCRIPTION: MEDIUM VOLTAGE AC DRIVE

BULLETIN 7000A
SIZE XXXA
Rockwell Automation
REV 1
DWG. NO. CARRIER-003-13E
SHEET 12
OF 16

Allen-Bradley

E-DH-C AutoCAD®

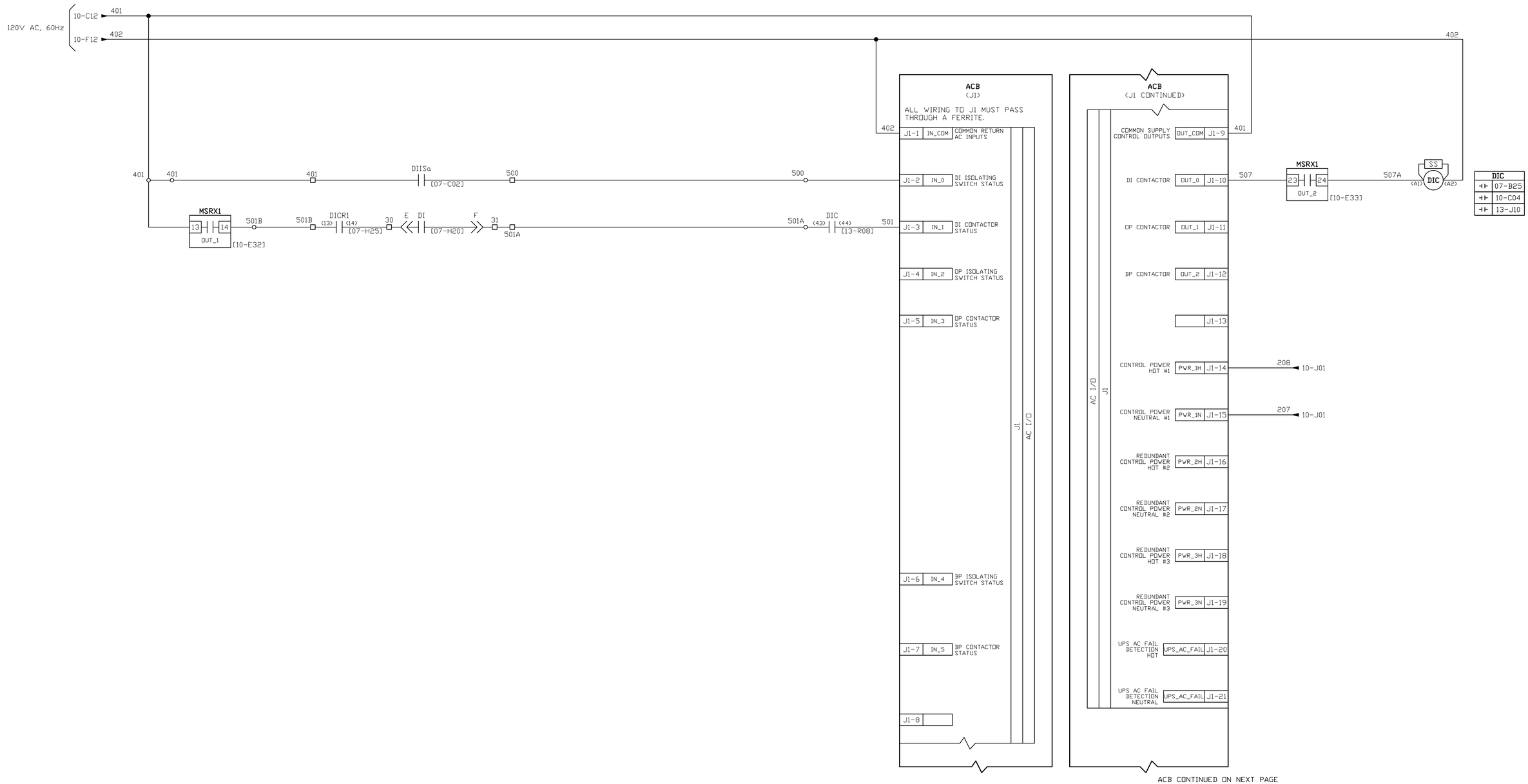

NOTE: NO CUSTOMER WIRING ON THIS PAGE

SEE SHT.2

THIS DRAWING IS THE PROPERTY OF ROCKWELL AUTOMATION, INC. OR ITS SUBSIDIARIES AND MAY NOT BE COPIED, USED OR DISCLOSED FOR ANY PURPOSE EXCEPT AS AUTHORIZED IN WRITING BY ROCKWELL AUTOMATION, INC.

CERTIFIED	DATE	REV	REVISION	INT	DATE
M.VARGAS		1	PRELIMINARY	JF	2013-06-28
DRAWN: JFILIPOVIC	DATE: 2013-06-28				

CUSTOMER: CARRIER CORPORATION
DISTRIBUTOR:
PROJECT:
ORDER NO.:

DESCRIPTION: MEDIUM VOLTAGE AC DRIVE

BULLETIN: 7000A
SIZE: XXXA
Rockwell Automation
REV: 1
DWG. NO.: CARRIER-003-13E
SHEET 13 OF 16

Allen-Bradley

E-DH-C AutoCAD®

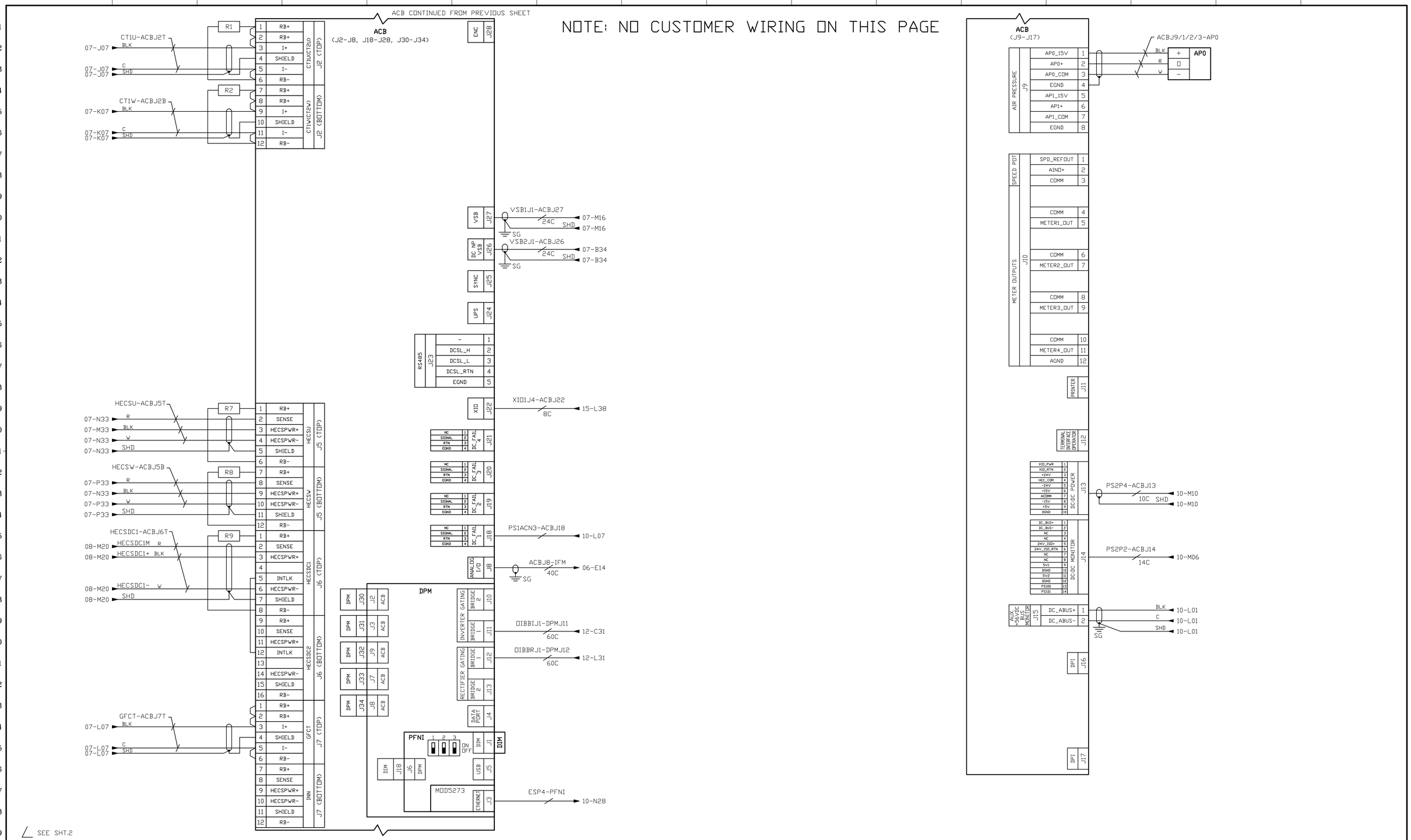

THIS DRAWING IS THE PROPERTY OF ROCKWELL AUTOMATION, INC. OR ITS SUBSIDIARIES AND MAY NOT BE COPIED, USED OR DISCLOSED FOR ANY PURPOSE EXCEPT AS AUTHORIZED IN WRITING BY ROCKWELL AUTOMATION, INC.	CERTIFIED M.VARGAS	DATE	REV 1	REVISION PRELIMINARY	INT JF	DATE 2013-06-28	CUSTOMER CARRIER CORPORATION	ORDER NO.	DESCRIPTION MEDIUM VOLTAGE AC DRIVE
	DRAWN JFILIPOVIC	DATE 2013-06-28					DISTRIBUTOR		
							PROJECT		

BULLETIN 7000A
SIZE XXXA
Rockwell Automation
REV 1
DWG. NO. CARRIER-003-13E
SHEET 14 OF 16

Allen-Bradley

E-DH-C AutoCAD®

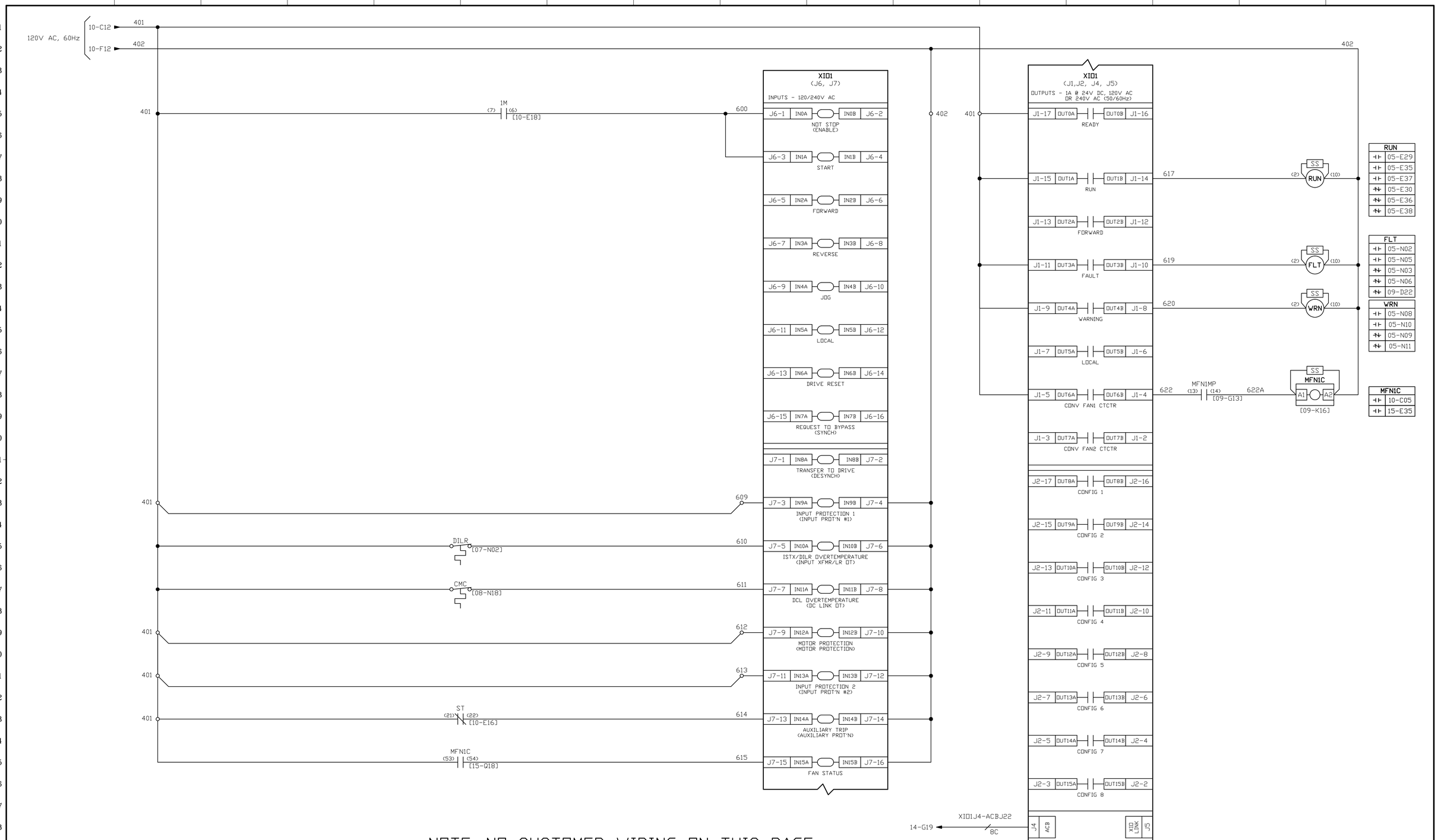

NOTE: NO CUSTOMER WIRING ON THIS PAGE

THIS DRAWING IS THE PROPERTY OF ROCKWELL AUTOMATION, INC. OR ITS SUBSIDIARIES AND MAY NOT BE COPIED, USED OR DISCLOSED FOR ANY PURPOSE EXCEPT AS AUTHORIZED IN WRITING BY ROCKWELL AUTOMATION, INC.

CERTIFIED	DATE	REV	REVISION	INT	DATE
M.VARGAS		1	PRELIMINARY	JF	2013-06-28
DRAWN JFILIPOVIC	DATE 2013-06-28				

CUSTOMER: CARRIER CORPORATION
DISTRIBUTOR:
PROJECT:
ORDER NO.

DESCRIPTION: MEDIUM VOLTAGE AC DRIVE

BULLETIN 7000A
SIZE XXXA
Rockwell Automation
REV 1
DWG. NO. CARRIER-003-13E
SHEET 15 OF 16

Allen-Bradley

E-DH-C AutoCAD®

WIRING

	NEMA	IEC
CONDUCTOR, OR CONDUCTIVE PATH	OR	
CONDUCTOR, ASSOCIATED OR FUTURE (NOT SUPPLIED BY ROCKWELL AUTOMATION)	OR	
TEMPORARY WIRING		
COPPER BUS BAR		
MECHANICALLY CONNECTED		
CABLE, MULTICONDUCTOR	4	4
CONDUCTOR, CROSSING OF PATHS OR CONDUCTORS NOT CONNECTED		
CONDUCTOR, JUNCTION OF CONNECTED PATHS, CONDUCTORS OR WIRES		
CONDUCTOR, SHIELDED SINGLE OR MULTICONDUCTOR		
CONDUCTORS, TWISTED		
WIRE GAUGE MARKER		
CONNECTOR, SEPARABLE OR JACKS ENGAGED		
TERMINAL		
TERMINAL (ROCKWELL AUTOMATION USE ONLY)		
TERMINAL BLOCKS — BARRIER E – END BARRIER	E	
WIRED TO / FROM DESTINATION (ARROW DIRECTION RELATIVE TO FLOW OF DRAWING ONLY)	2-A01 OR 2-A01 ZONE SHEET	

SWITCHES AND INPUT DEVICES

	NEMA	IEC
SWITCH, SINGLE THROW		
SWITCH, TOGGLE (MAINTAINED POSITION) TRANSFER, SINGLE POLE	DOOR INTERLOCK	
PUSHBUTTON NORMALLY OPEN (MAKE) / NORMALLY CLOSED (BREAK)		
SWITCH, MUSHROOM HEAD, (MAINTAINED)		
CONTACT NORMALLY OPEN (MAKE) / NORMALLY CLOSED (BREAK)		
ON-DELAY TIMED CONTACT NORMALLY OPEN (MAKE) / NORMALLY CLOSED (BREAK)		
OFF-DELAY TIMED CONTACT NORMALLY OPEN (MAKE) / NORMALLY CLOSED (BREAK)		
SWITCH, FLOW - ACTUATED, CLOSES ON INCREASE IN FLOW		
SWITCH, LIQUID LEVEL ACTUATED (FLOAT) CLOSING ON RISING LEVEL		
SWITCH, PRESSURE OR VACUUM OPERATED CLOSING ON RISING PRESSURE		P
SWITCH, TEMPERATURE ACTUATED, OPENING ON RISING TEMPERATURE		
SWITCH, SELECTOR (MULTIPOSITION) WITH CONTACT CLOSED INDICATOR X - INDICATES CONTACTS CLOSE		1 2
SWITCH, SELECTOR (MULTIPOSITION) WITH PUSHBUTTON TYPE CONTACT MECHANISM X - INDICATES CONTACTS CLOSED		1 2 3
PLC INPUT	IN	

OUTPUT DEVICES

	NEMA	IEC
COIL, OPERATING		
COIL, BLOWOUT		
FAN (3Ø INDUCTION MOTOR)		F 3~
FAN (1Ø INDUCTION MOTOR)		F 1~
INDUCTION MACHINE		M 3~
INDUCTION MACHINE (SYNCHRONOUS)		MS 3~
LIGHT, INDICATING (PILOT, SIGNALLING, OR SWITCHBOARD)		
LIGHT, INDICATING PUSH-TO-TEST		
LIGHT, INDICATING (LED TYPE)		
METER (* = METER'S FUNCTION)	*	*
RECEPTACLE		
PLC OUTPUT	OUT	
GENERATOR		

RESISTORS, CAPS, WINDINGS AND GROUND

	NEMA	IEC
CAPACITOR		
RESISTOR, GENERAL		
RESISTOR, ADJUSTABLE (POTENTIOMETER)		
REACTOR, SATURABLE CORE	DC WINDING	
WINDING		
TRANSFORMER, WITH MAGNETIC CORE		
TRANSFORMER, CURRENT		
HALL EFFECT CURRENT SENSOR	+ M –	+ M –
GROUND ** PE - EARTH GROUND SG - SAFETY GROUND TE - SIGNAL GROUND	**	
FERRITE		
GROUNDING BALL		

POWER ELECTRONIC DEVICES

	NEMA	IEC
DIODE, SEMICONDUCTOR		
RECTIFIER SILICON CONTROLLED		
SYMMETRICAL GATE-COMMUTATED THYRISTOR AND GATE DRIVER BOARD		
RECTIFIER, FULL WAVE BRIDGE	+ –	

PROTECTION

	NEMA	IEC
CIRCUIT BREAKER, CONTROL/POWER		
FUSE, CONTROL/POWER		
OVERLOAD RELAY, THERMAL		
SURGE SUPPRESSOR	SS	
SWITCH, DISCONNECT (FUSED)		
SWITCH, DISCONNECT (NON FUSED)		
VARISTOR		U
THERMOCOUPLE		
HEATSINK		

MISCELLANEOUS

IEEE NUMBER FOR PROTECTIVE DEVICE	#
KEY INTERLOCK ON ISOLATION SWITCH OR BREAKER	K
KEY INTERLOCK ON MV DOOR	K
NOTE NUMBER INDICATOR	#
SWITCH ON – INDICATES SWITCH POSITION OFF	1 2 ON
CONTACT LOCATION DESCRIPTION	RELAY 02-A01 CONTACT TYPE SHEET ZONE
RELAY LOCATION DESCRIPTION	(2-A01) SHEET ZONE

THIS DRAWING IS THE PROPERTY OF ROCKWELL AUTOMATION, INC. OR ITS SUBSIDIARIES AND MAY NOT BE COPIED, USED OR DISCLOSED FOR ANY PURPOSE EXCEPT AS AUTHORIZED IN WRITING BY ROCKWELL AUTOMATION, INC.

CERTIFIED	DATE	REV	REVISION	INT	DATE
M.VARGAS		1	PRELIMINARY	JF	2013-06-28
DRAWN: J.FILIPOVIC	DATE: 2013-06-28				

CUSTOMER: CARRIER CORPORATION
DISTRIBUTOR:
PROJECT:
ORDER NO.:

DESCRIPTION: SYMBOL TABLE

BULLETIN: 7000A
SIZE: XXXA
REV: 1
DWG. NO.: CARRIER-003-13E
SHEET 16 OF 16

Rockwell Automation — Allen-Bradley

E-IM-C

AutoCAD®