TOSHIBA
Carrier

ERV Control Interface

Installation / Operation manual

Model name: **For Commercial Use**

TCB-IFVN1UL ERV Control Interface

ENGLISH

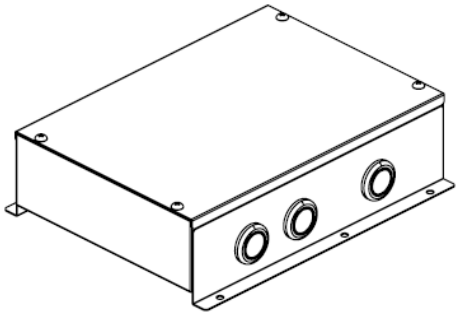

Thank you for purchasing TOSHIBA / Carrier ERV Control Interface. This manual explains how to install and use this interface. There should be a link to the installation and owner's manuals. This interface can be used with TOSHIBA / Carrier control system. For detailed instructions on installing and using this interface, refer to the installation manual and owner's manual.

- Please follow the manual(s) for local supplied products which connect this interface.
- Toshiba Carrier does not take any responsibility on the local design and application.

Contents

1 SAFETY PRECAUTIONS 2

2 INTRODUCTION 3

3 SUPPLIED PARTS 4

4 INSTALLATION 4

5 ELECTRICAL WORK 5

6 INSATLLATION METHOD FOR EACH SYSTEM CONFIGURATION. 11

7 ADVANCED CONTROL. 18

8 TEST RUN 22

9 OPERATION 24

10 TROUBLESHOOTING. 29

1 SAFETY PRECAUTIONS

- Read these “Safety precautions” carefully before installation.
- The precautions include important safety information. Make sure you follow the instructions and understand these details (indications and symbols) before reading the body text.
- Once the installation is completed, perform a test run to identify for any problems. Make sure the customer understands how to use and maintain the unit.
- Make sure this manual is always accessible for future reference.

Indication	Meaning of Indication
WARNING	WARNING signifies hazards that could result in serious bodily harm (*1) or death.
CAUTION	CAUTIONS is used to identify unsafe practices, which would result in minor personal injury or product and property damage (*3).

*1: Serious bodily harm refers to loss of eyesight, injury, burns, electric shock, bone fracture, and other injuries that require hospitalization or long-term treatment as an outpatient.
*2 : Personal injury (*2) refers to injury, burns, electric shock, and other injuries which do not require hospitalization or long-term treatment as an outpatient.
*3 : Property damage refers to damage extending to buildings, household effects, domestic livestock, and pets.

Indication	Meaning of Symbols
	This indicates prohibited items. The actual contents of the prohibition are indicated by a picture or text placed inside or next to the graphic symbol.
	This indicates compulsory (mandatory) items. The actual contents of the obligation indicated by a picture or text placed inside or next to the graphic.

WARNING	
	●**Ask an authorized dealer or qualified installation professional to install or reinstall this unit.** Inappropriate installation may result in electric shock or fire. ●**Electrical work must be performed by a qualified electrician in accordance with this installation manual. This work must satisfy all local, national and international regulations.** Inappropriate work may result in electric shock or fire. ●**Be sure to turn off all main power supply switches before starting any electrical work.** Failure to do so may result in electric shock.
	●**Do not modify the unit.** A fire or an electric shock may occur.

CAUTION	
	●**Do not install the unit where flammable liquids may leak.** If a flammable liquid leaks and accumulates around the unit, it may cause a fire.
	●**Perform wiring correctly in accordance with specified current capacity.** Failure to do so may result in short-circuiting, overheating or fire. ●**Use the predefined cable and connect them certainly. Keep the connecting terminal free from external force.** It may cause a fire.

2 INTRODUCTION

■Applications / functions / specifications

Applications

ERV Control Interface is used to connect and operate 3rd party Energy Recovery Ventilation).

Functions

The ERV Control Interface enables third-party ERV ON/OFF and fan speed by TOSHIBA / Carrier remote control, which is connected to the TOSHIBA/Carrier control system. The external signal input also enables ON/OFF and fan speed control.

Specifications

Specification		TCB-IFVN1UL	
Power supply V/Hz/Ph		208/230VAC / 60Hz / 1Ph	
Power consumption W		7	
MIN CKT AMP (MCA) A		15	
Ambient Operating Temperature Range		32 to 104F	
Ambient Operating Humidity Range		10 to 90% (Non-condensing)	
Net Weight lbs		3.5 (1.6kg)	
Shipping Weight lbs		4.4 (2.0kg)	
Height X Width X Depth in		2.82” (71.6mm) X 10.43” (265mm) X 8.78” (223mm)	
Digital output	ON/OFF	Non-voltage relay contact (DC12V COM)	Up to 75mA a rated current of operation relay coil.
	High tap	Non-voltage relay contact (DC12V COM)	
	Low tap	Non-voltage relay contact (DC12V COM)	
	Alarm	Non-voltage relay contact (DC12V COM)	
Digital input	ON/OFF	Non-voltage a contact (0V COM)	External signal by contact point only. Up to 16ft from PCB connector to contact.
	High tap	Non-voltage a contact (0V COM)	
	Low tap	Non-voltage a contact (0V COM)	
	Alarm	Non-voltage a contact (0V COM)	
Number of connect devices		Max. 8 as one ERV group control	
Control ERV with air conditioner		Available	
Installation environment		For indoor use only	
Connectable remote control		RBC-AMS54E-UL / RBC-AMT32UL	
Control pollution degree		Degree 1	

■ External view

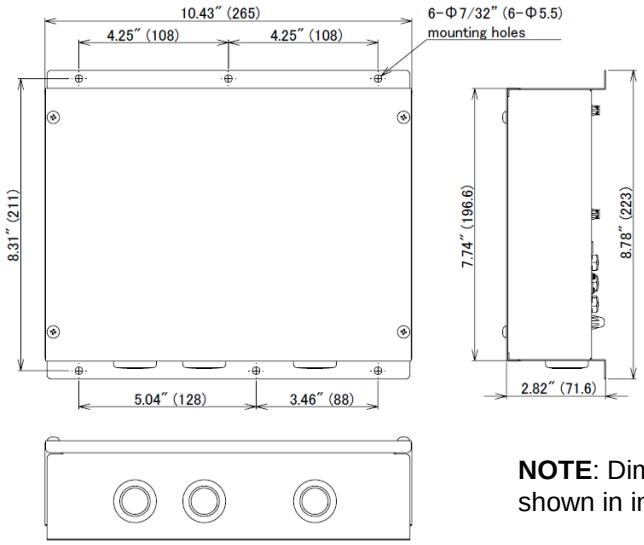

NOTE: Dimensions are shown in inches (mm).

3 SUPPLIED PARTS

Check the following package contents.

No.	Item	Quantity	Remarks
1	ERV Control Interface	1	
2	Installation Manual	1	
3	Screw	4	5/32” X 0.47” tapping screws
4	CN60 Wire harness assembly	1	For digital output (ON/OFF, High/Low, Alarm)
5	CN61 Wire harness assembly	1	For digital input (High, Low)
6	CN70 Wire harness assembly	1	For digital input (Alarm)
7	CN73 Wire harness assembly	1	For digital input (ON/OFF)

4 INSTALLATION

■Installation method and orientation

There are four installation methods (surface and wall mounts) for this interface as shown below, Use the screws included with the unit. Be sure to use the appropriate conduit if requires on site. Mounting surface temperature limit is 140F.

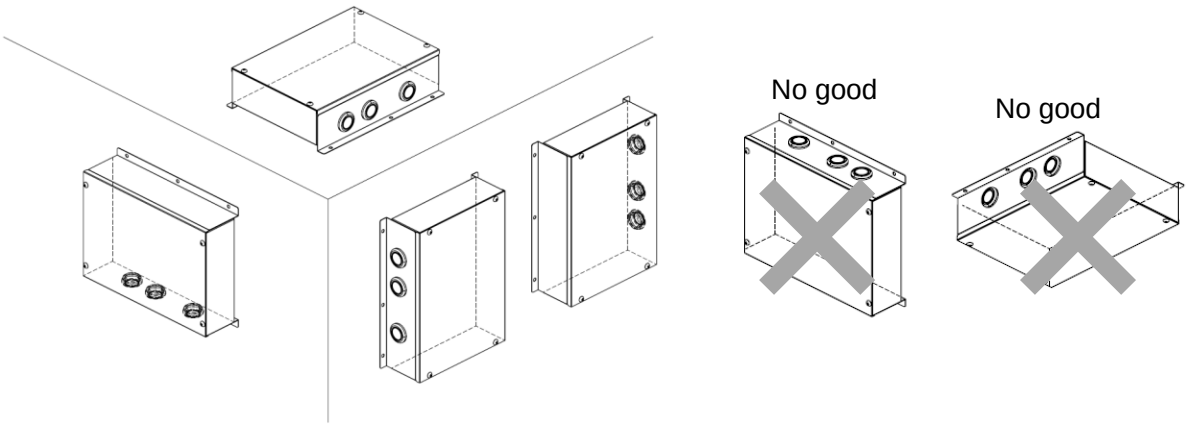

REQUIREMENT

Do not install the unit in any of the following places.

- Humid or wet area
- Dusty area
- Area exposed to direct sunlight
- Where there is a TV set or radio within one meter
- Where the unit will be exposed to rain (outdoors, under eaves, etc)

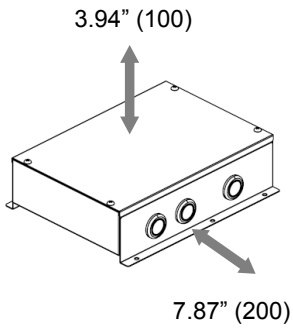

■Installation space and maintenance space

Leave space on the sides for connecting cables through inlets.

Leave space on the top for maintenance.

The other sides can be adjacent to surrounding objects.

5 ELECTRICAL WORK

⚠ WARNING

- **Securely connect the specified wires so that the external tension does not affect the terminal connectors.** Improper connection may cause an electric shock or a fire.
- **Connect earth grounding wire.**
  Incomplete grounding will cause an electric shock. Do not connect ground wires to gas pipes, water pipes, lightning rods, or the grounding wires of telephone lines.
- **Appliance shall be installed in accordance with national wiring regulations.**
  Capacity shortage of power circuit or incomplete installation may cause an electric shock or a fire.

⚠ CAUTION

- If wiring is incorrect or incomplete, it may cause an electrical fire.
- Install an earth leakage breaker that is not tripped by shock waves.
  If an earth leakage breaker is not installed, an electric shock may occur.
- Use the cord clamps attached to the product.
- Do not damage or scratch the conductive core, power inner insulator, or inter connecting wires when stripping them.
- Use the power cord and inter connecting wire of specified type and thickness, protective devices required.
- Never connect 208-230V power to the terminal blocks (U1/U2, A/B, etc) for control wiring, or the system will fail.
- Wiring connection in this box must be rated at least 300V.

REQUIREMENT

- For power supply wiring, strictly conform to the Local Regulation for each country.
- After connecting wires to the terminal blocks, provide a trap and secure wires with cable clamps.

■ Power supply wires and communication wires specifications

Power supply wires and communication wires are procured locally.
Follow to the table below for the power supply specifications. If capacity is small overheating or seizure is likely. For the power capacity of the outdoor unit and the power supply wires specifications, refer to the outdoor unit's installation manual.

ERV control interface power supply

- Make sure the ERV control interface power supply is separated from that of the outdoor unit's power supply.
- Arrange the power supply, earth leakage breaker, and main switch of the ERV control interface so they are connected to the same outdoor unit.

▼ Power supply

Power supply	208 / 230V 1ph 60Hz	
Power supply switch / Earth leakage breaker or power supply wirings / fuse rating for ERV control interface should be selected by the accumulated total current values of the ERV control interface.		
Power supply wiring	Up to 164'1" (50m)	MCA: 0.4A, MOCP: 15A

▼Control wiring, Central control wiring

- 2-core shielded wires (non-polarity) are used for the control wiring between the indoor and outdoor units and central control wiring.
- The length of the communication line is the total length of the inter unit wire between the indoor and outdoor units added to the central control system wire length.

▼ VRF Communication Line (U1/U2)

VRF Control wiring between ERV control interface and outdoor unit (2-core shield wire)	Wire Size	(Up to 3280'10"(1000m)) AWG16 (Up to 6561'8" (2000m)) AWG14
Central control line wiring (2-core shield wire)	Wire Size	(Up to 3280'10" (1000m)) AWG16 (Up to 6561'8" (2000m)) AWG14

▼ Remote controller wiring (A/B)

Remote control wiring, remote controller inter-unit wiring	2-core, non-polarity, Wire size: AWG20

Total wire length of remote control wiring and remote control inter-unit wiring = L + L1 + L2 + … Ln	In case of wired type only	Up to 1650'5" (500m) Up to 984'3" (300m) in case of two remote control by RBC-AMS54E-UL
	In case of wireless type included	Up to 1312'4" (400m)
Total wire length of remote control inter-unit wiring = L1 + L2..Ln		Up to 656'2" (200m)

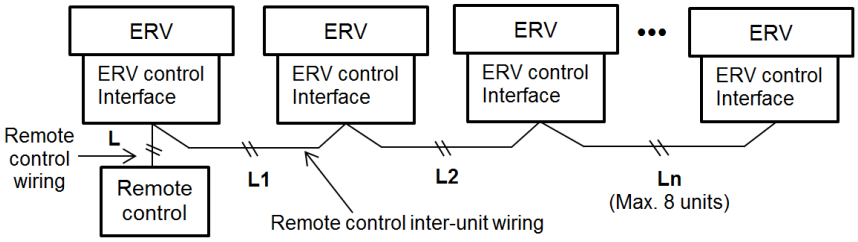

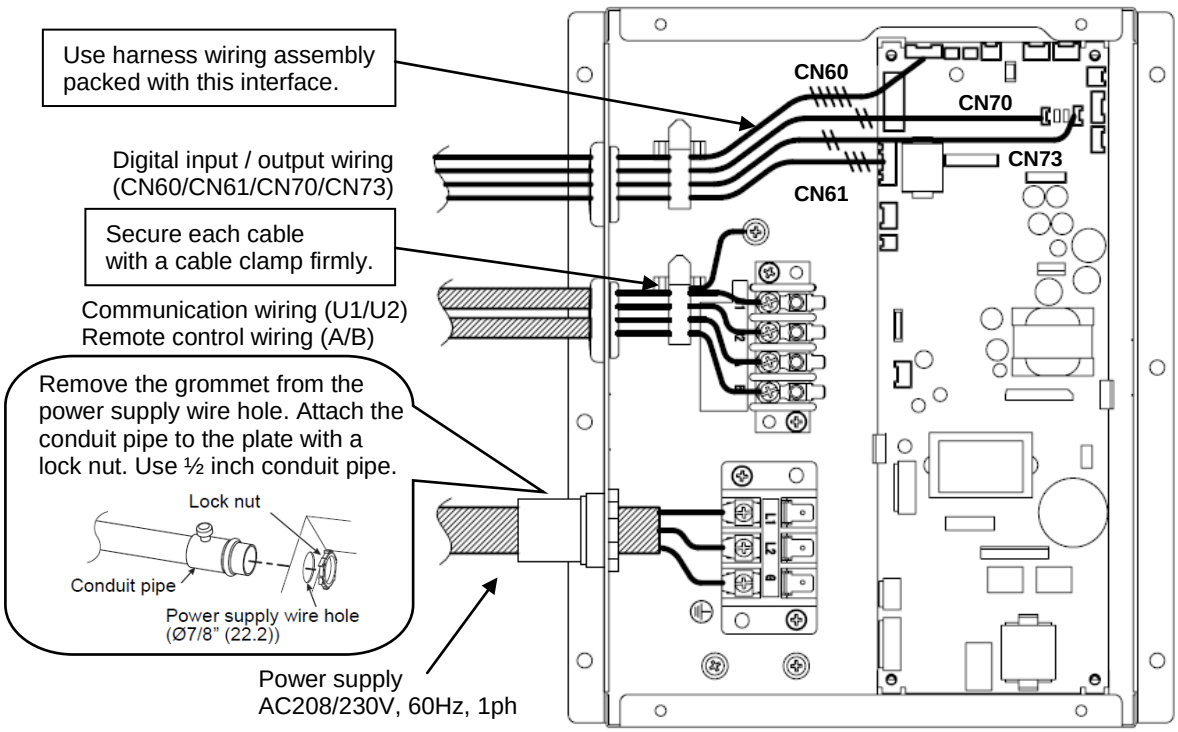

(NOTE) For field wiring, use copper conductors only.

■ Connection diagram

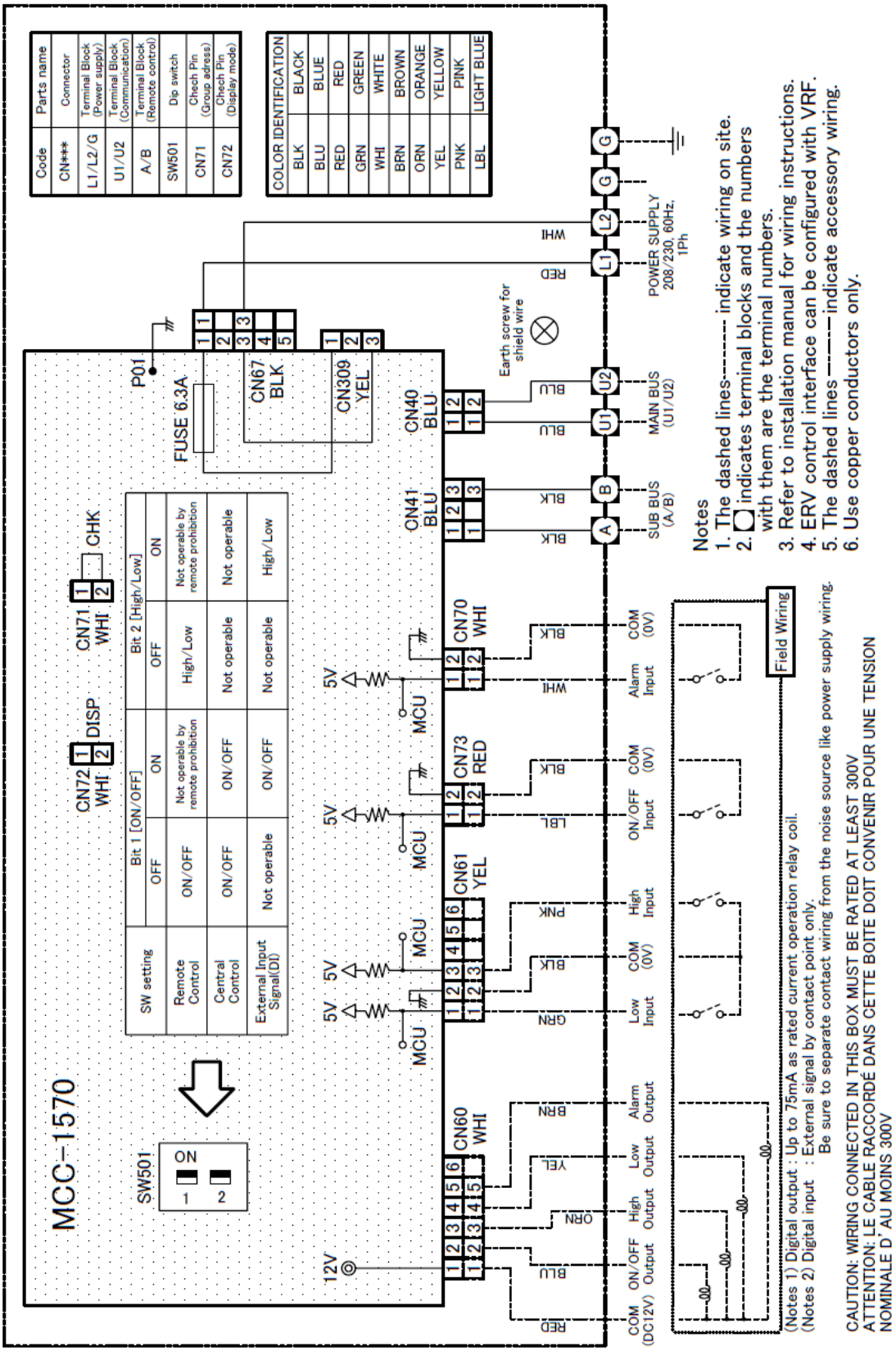

Code	Parts name	Code	Parts name
CN***	Connector	SW501	Dip Switch
L1/L2/G	Terminal Block (Power supply)	CN71	Check Pin (Group address)
U1/U2	Terminal Block (Communication)	CN72	Check Pin (No usage)
A/B	Terminal Block (Remote control)		

1. The dotted line represents locally procured wire, and the dashed line represents accessories packed in the ERV control interface.
2. Digital input and output signals can be connected via the harness wiring assembly, which is packed with products.

■ Connection wiring

Connect power cables, earth wires, and communication cables to the specified terminals on the terminal block.

■ Power supply wiring and ground wire

1. Strip the wire ends.
   Power supply wire : 0.4” (10mm)
2. Match the wire colors with the terminal numbers on the ERV units’ and circuit breakers’ terminal block,s and firmly screw the wires to the corresponding terminals.
3. Secure the ground wire with the ground screw.

■ Communication cables (U1/U2)

In a central control system, connect the copper braid shield of central control wire (2-core shielded wire).

1. Strip the wire ends
   Communication cable (U1/U2) : 0.4” (10mm)
2. Connect shield wire to the screw terminal.

⚠ CAUTION

The remote control wire (communication line) and AC208/230V wires cannot be run in parallel, make contact stored in the same conduits, or noise may be caused in the control system.

■ Remote control wiring

- Since the remote control wire has non-polarity, the connections to ERV control interface terminal blocks A and B maybe reversed.
- For wiring and installation, refer to the installation manual enclosed to in the remote control.

▼ Wiring diagram

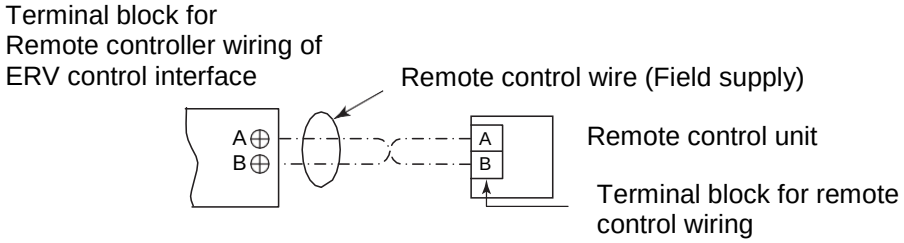

■ Digital input / output wiring

By using the provided accessory harness wiring assembly, digital input (external ON/OFF, Fan speed setting, Alarm) and external output to control ERV (ON/OFF, Fan speed, Alarm) are available.

Connector	Housing color	Harness assembly	Function
CN60 (Digital output)	White	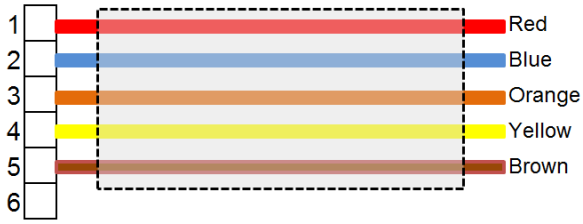	COM(DC12V) ON/OFF output High tap output Low tap output Alarm output
CN61 (Digital input)	Yellow	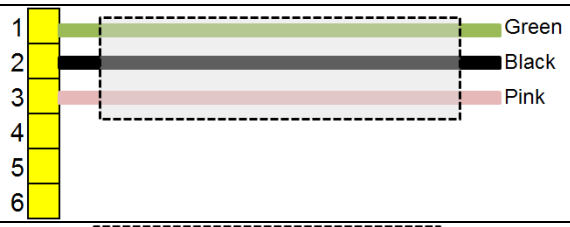	Low tap input COM(0V) High tap input
CN73 (Digital input)	Red	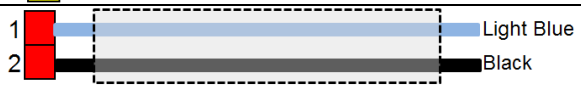	ON/OFF input COM (0V)
CN70 (Digital input)	White		Alarm input COM(0V)

(Note 1) Digital input : External signal by contact point only. Up to 16ft from PCB to contact.
(Note 2) Digital output : Up to 75mA a rated current of operation relay coil.

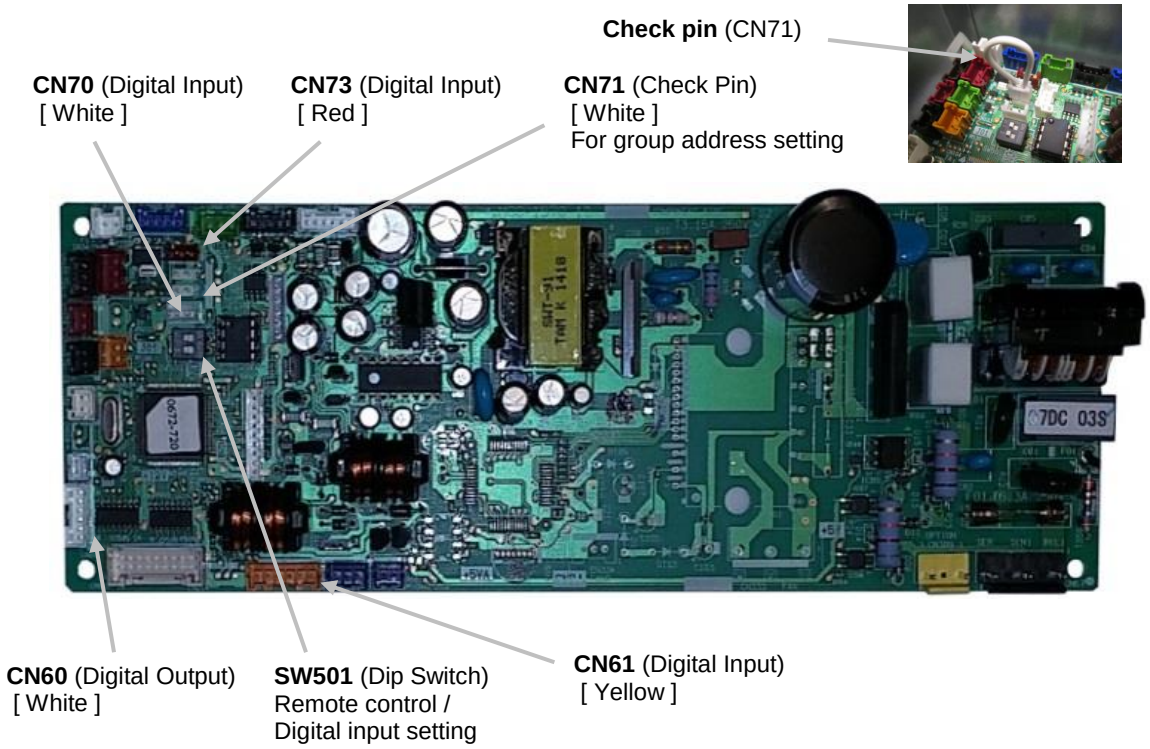

■P.C. Board Connector specification (MCC-1570: TCB-IFVN1UL)

Connector	Pin	Function	Standard / Option
CN60 (WHITE)	1	DC12V (COM)	-
	2	**ON/OFF output**	Standard
	3	**High tap output**	Standard
	4	**Low tap output**	Standard
	5	**Alarm output**	Standard
	6	(No function)	Standard
CN61 (YELLOW)	1	**Low tap input**	Standard
	2	0V (COM) for pin 1, 3	-
	3	**High tap input**	Standard
	4	(No function)	-
	5	DC12V (COM) for pin 4, 6	-
	6	(No function)	-
CN70 (WHITE)	1	**Alarm input**	Standard
	2	0V (COM)	-
CN73 (RED)	1	**ON/OFF input**	Standard
	2	0V (COM)	-
CN71 (WHITE)	Group address setting (Factory shipment : Connect)		Standard
CN72 (WHITE)	(No use)		

[NOTE]

- The Alarm generates when the alarm input signal continues for more than 1 minute.

6 INSTALLATION METHOD FOR EACH SYSTEM CONFIGURATION

Setting and electrical wiring differ depending on the system configuration. Perform electric wiring according to the system examples shown in the table below.

System example	Operation
[A] ERV individual system (One ERV is used.) 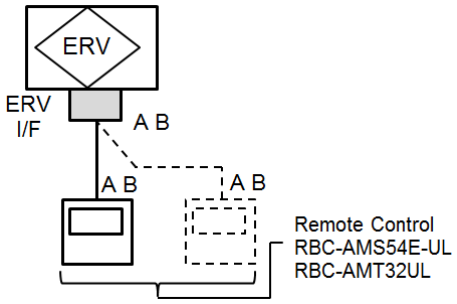 	• Remote control (RBC-AMS54E-UL,RBC-AMT32UL) enables ERV's ON/OFF and fan speed change. •When two remote controls are used, the remote control's indications always reflect the result of the latter operation. The latter operation overrides the former.
[B] ERV group control system (Multiple ERV are used.) 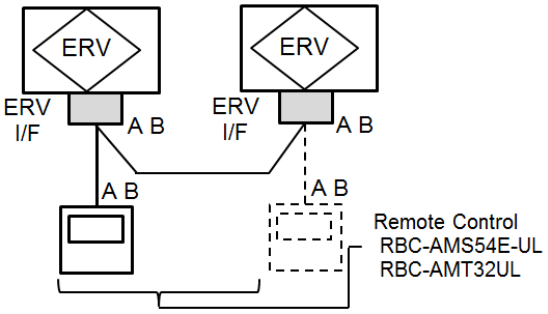 	•Remote control (RBC-AMS54E-UL,RBC-AMT32UL) enables ERV's ON/OFF, fan speed change. •When two remote control are used, the remote control's indications always reflect the result of the latter operation and the settings of header unit. The latter operation overrides the former. •Up to 8 ERV is available in one group control.
[C] ERV system linked with air conditioners 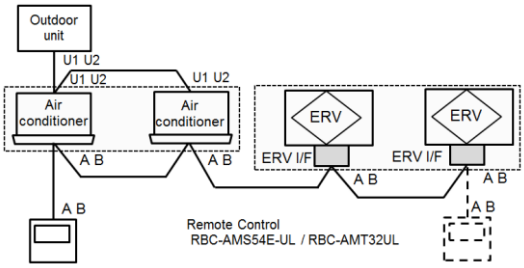 	•The remote control for air conditioner or ERV can be used to ON/OFF the entire system. •The remote control (RBC-AMS54E-UL) can control the fan speed of ERV. •The remote control (RBC-AMT32UL) cannot change the fan speed of ERV. •The remote control (RBC-AMS54E-UL, RBC-AMT32UL) can operate ON/OFF control of ERV separately. *Setting on site is required for separate ON/OFF control. Refer to "Advanced control" section. •When two remote controls are used, the remote control's indications always reflect the result of the latter operation. The latter operation overrides the former. In addition, the indications of ERV always reflect setting the of unit with the smallest indoor address number. •Up to total 8 units are available in one group control.

System example	Operation
[D] Central control system (When controlling ERV only) 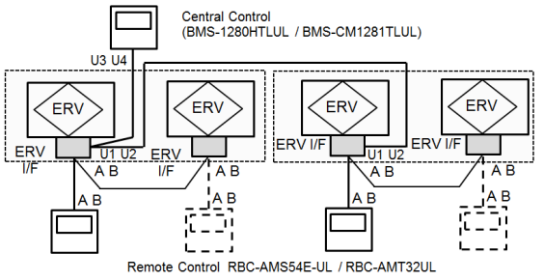 	•The central control can perform the ON/OFF function for the entire system and separate ON/OFF groups of ERV. •The central control cannot control the ERV fan speed. •If central control and remote control are used, the latter operation overrides the former. • Remote control (RBC-AMS54E-UL, RBC-AMT32UL) can control ERV ON/OFF and fan speed.
[E] Central control system (When controlling the air conditioner and ERV separately) 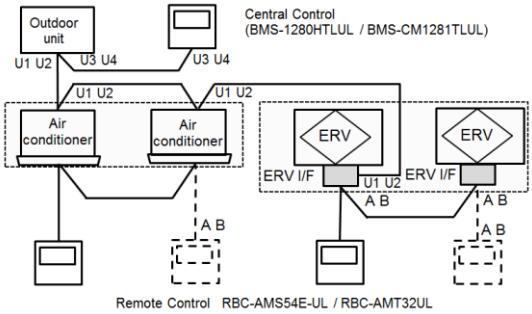 	•The central control can perform the ON/OFF the entire system and separate ON/OFF groups of air conditioners and ERV. Air conditioner and ERV are not linked in this system. •The central control cannot change the ERV fan speed. •The operation of the central control overrides The operation of the remote control and air conditioners. However, the operation of the remote control for ERV does not affect the operation of the remote control for the air conditioner, and vice versa. • ERV remote control (RBC-AMS54E-UL, RBC-AMT32UL) can operate ON/OFF and fan speed.
[F] Central control system (When controlling the air conditioner and ERV together) 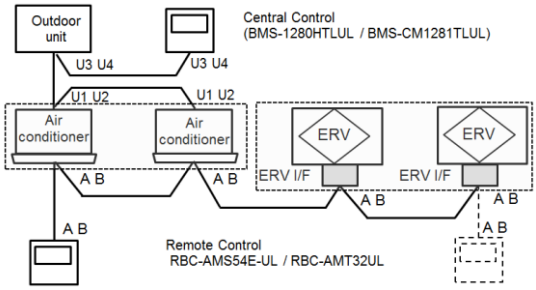 	•The central control can perform the ON/OFF function of the entire system. It can be used to ON/OFF of the ERV separately (*). •The central control cannot be used to control the ERV fan speed. •If three control devices are used ; (1) the central control, and (2) remote controls for ERV, (3) air conditioner; the latter operation overrides the former regardless of which device is used. •The remote control (RBC-AMS54E-UL) can change ERV fan speed. •The remote control (RBC-AMT32UL) cannot change the ERV fan speed. •The remote control for air conditioner or ERV can be used to ON/OFF of ERV separately. *Setting on site are required for separate control. Refer to “Advanced control” section.

	ERV system		ERV system linked with air conditioners	
System example	**[A]**	**[B]**	-	**[C]**
Central control	None			
No. of ERV	1	Multiple	1	Multiple
Operation with indoor unit	No		Yes	
Remote control inter-unit wiring	Not necessary	Necessary		
Central control wiring	Not necessary			
Line address (DN code : 12)	Fixed *The line (system) address is fixed as 31 for ERV control interface			
Indoor address (DN code : 13)	Not necessary (Factory default : 1)	Necessary No duplication (Factory default : 1)	Not necessary (Factory default :1)	Necessary No duplication (Factory default : 1)
Group address (DN code : 14) (Factory default : short circuit)	CN71=short circuit	CN71=short circuit at header unit / CN71=open at follower unit	CN71=short circuit	CN71=open at all follower unit : ERV control interface
Central control address (DN code : 03)	Not necessary (Factory default : 99 (Unfixed))			
Check before turning on the power	Complete the settings of ERV control interface and wiring.		•Complete the settings of ERV control interface and wiring. •Refer to the installation manual of air conditioner for setting and wiring.	
Turning on the power	Turn on the breaker of all ERV control interfaces.		Turn on ERV control interface at first. Refer to the installation manual of air conditioner for its power supply.	
Central control address setting	Not necessary			

	Central control system				
System example	**[D]**	-	**[E]**	-	**[F]**
Central control	One ERV interface used.	When controlling air conditioner and ERV separately		When controlling the air conditioner and ERV together	
No. of ERV	Multiple	1	Multiple	1	Multiple
Operation with air conditioners	No			Yes	
Remote control inter-unit wiring	Necessary	Not necessary	Necessary		
Central control wiring	Necessary (Header unit only)			Not necessary	
Line address (DN code : 12)	Fixed. *The line (system) address is fixed as 31 for ERV control interface.				
Indoor address (DN code : 13)	Necessary No duplication (Factory default : 1)	Not necessary (Factory default : 1)	Necessary No duplication (Factory default : 1)	Not necessary (Factory default : 1)	Necessary No duplication (Factory default : 1)
Group address (DN code : 14) (Factory default : short circuit)	CN71=Short circuit at header unit / CN71 = Open at follower unit	CN71=Short circuit (Header unit)	CN71=Short circuit at header unit / CN71 = Open at follower unit	CN71=Open (Follower unit)	CN71=Open for all (Follower unit)
Central address (DN code : 03)	Necessary (Header unit)			Not necessary	
Check before turning on the power	Complete the settings for ERV control interface and wiring	•Complete the settings of ERV control interface and wiring. •Refer to the installation manual of air conditioner for setting and wiring.			
Turning in the power	Turn on breaker of all ERV control interfaces.	Turn on ERV control interface at first. Refer to the installation manual of air conditioner for its power supply.			
Central control address setting	Refer to the installation manual of the central control device.				

■Settings for each system configuration

NOTE

The line (system) address is fixed as 31 for ERV control interface.

[A] ERV system (One ERV is used, not connected with air conditioner indoor units)

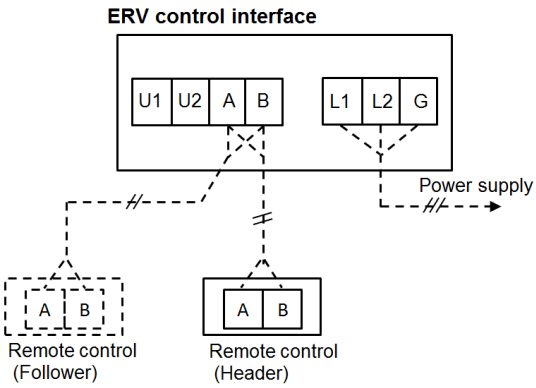

•For ERV-only applications the Group address (DN14) is set automatically by the status of CN71. There is no need to manually set DN14 in these applications. To activate CN71 setting, power ON/OFF is necessary.

<Setting example>

Unit	DN code	Unit 1
Line address	DN12	31 (Fixed)
Indoor address	DN13	1
Group address	DN14	0
CN71 (Check Pin)		Closed (Default)

[B] ERV system (multiple ERV are used)

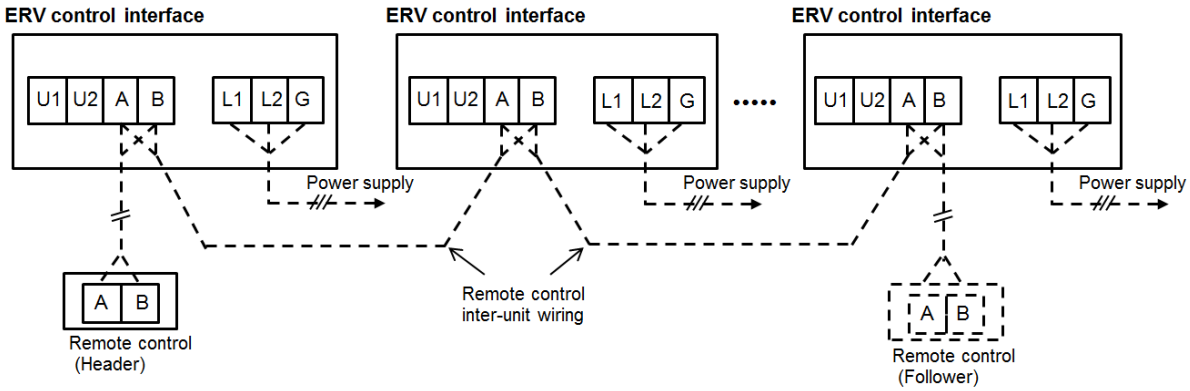

<Setting example>

Unit	DN code	Unit 1	Unit 2	Unit 3
Line address	DN 12	31 (Fixed)	31 (Fixed)	31 (Fixed)
Indoor address	DN 13	1	2	3
Group address	DN 14	1	2	2
CN71 (Check Pin)		Closed (Default)	Open	Open

- Group address set by CN71 automatically when there is remote control inter-unit wiring.
- Be sure to set CN71 s “Open” at all of the follower ERV.
- To activate the CN71 setting, power supply ON/OFF is necessary.
- For group control, install remote control inter-unit wiring between the units.
- Up to 8 units can be installed for group control.
- Be sure to set different indoor addresses among units in group control.

[C] ERV system linked with air conditioners' indoor unit

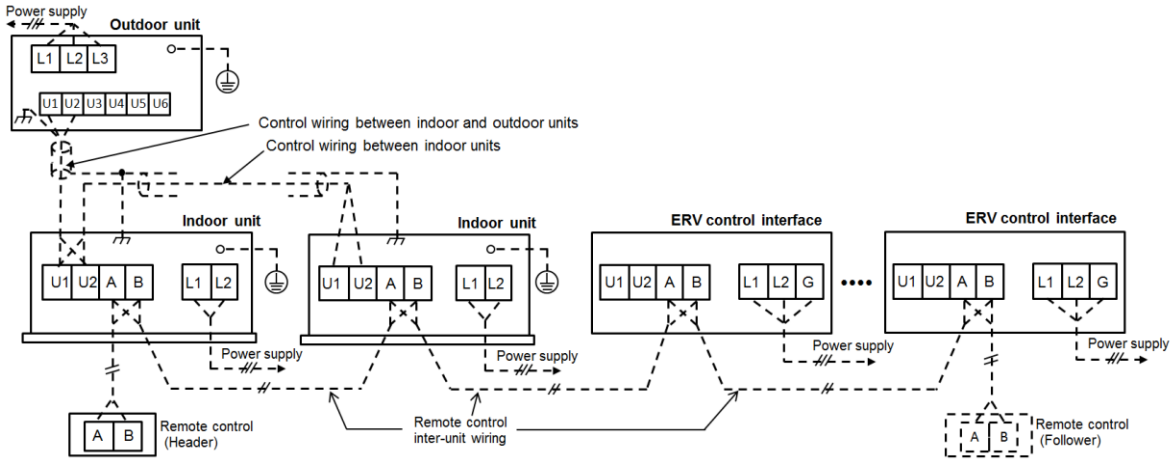

<Setting example>

Unit	DN code	Unit 1 (AC)	Unit 2 (AC)	Unit 3 (ERV)	Unit 4 (ERV)
Line address	DN 12	1	1	31 (Fixed)	31 (Fixed)
Indoor address	DN 13	1	2	1	2
Group address	DN 14	1 (Header)	2 (Follower)	2 (Follower)	2 (Follower)
CN71 (Check Pin)		-	-	Open	Open

- Be sure to set CN71 as "Open" on ERV control interface so that ERV becomes follower.
- For group control, install remote control inter-unit wiring between the units.
- Up to 8 units can be installed for group control among air conditioners and ERV.
- Be sure to set different indoor address among ERV control interfaces.

[D] Central control system (When controlling ERV only)

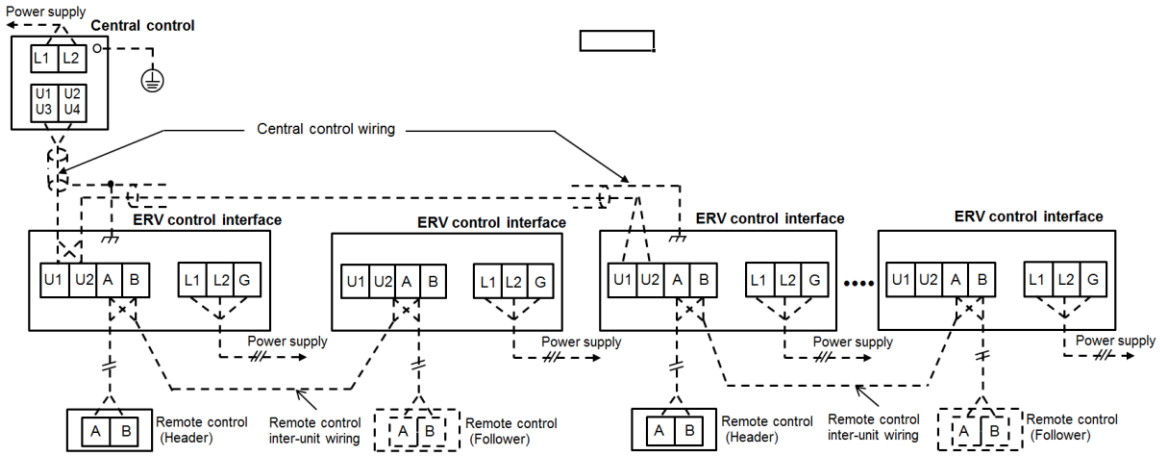

<Setting example>

Unit	DN code	Unit 1	Unit 2	Unit 3	Unit 4
Central address	DN 03	1	1	2	2
Line address	DN 12	31 (Fixed)	31 (Fixed)	31 (Fixed)	31 (Fixed)
Indoor address	DN 13	1	2	3	4
Group address	DN 14	1 (Header)	2 (Follower)	1 (Header)	2 (Follower)
CN71 (Check Pin)		Closed (Default)	Open	Closed (Default)	Open

- Group address set by CN71 automatically when there is remote control inter-unit wiring.
- Be sure to set the central control address in the header unit so that central control enables ERV ON/OFF.

[E] Central control system (When controlling air conditioner and ERV separately)

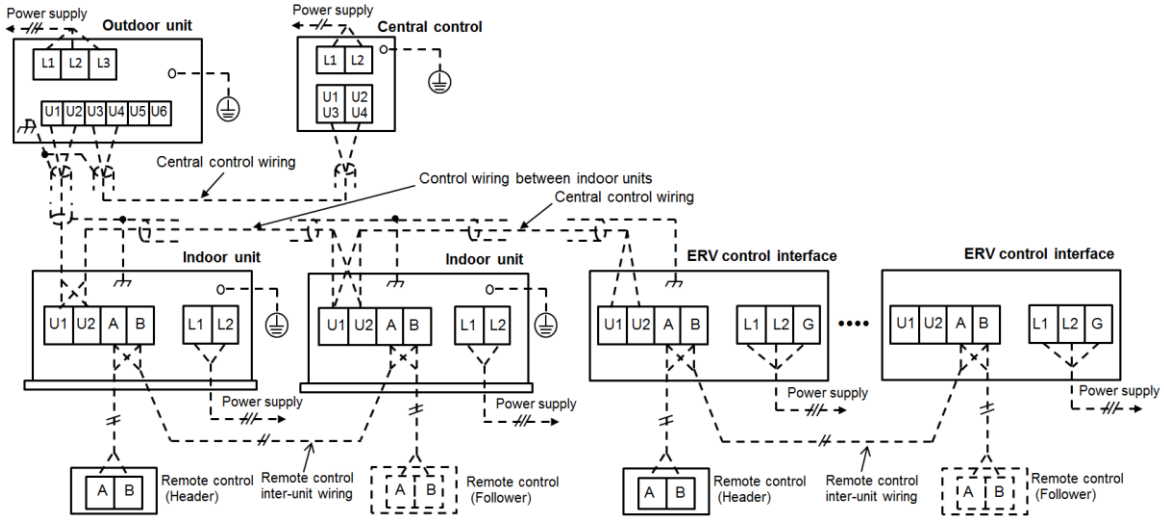

<Setting example>

Unit	DN code	Unit 1 (AC)	Unit 2 (AC)	Unit 3 (ERV)	Unit 4 (ERV)
Central address	DN 03	1	2	3	3
Line address	DN 12	1	1	31 (Fixed)	31 (Fixed)
Indoor address	DN 13	1	2	1	2
Group address	DN 14	1 (Header)	2 (Follower)	1 (Header)	2 (Follower)
CN71 (check Pin)		-	-	Closed (Default)	Open

•Be sure to set central control address in header unit so that central control enables operation.

[F] Central control system (When controlling air conditioner and ERV together)

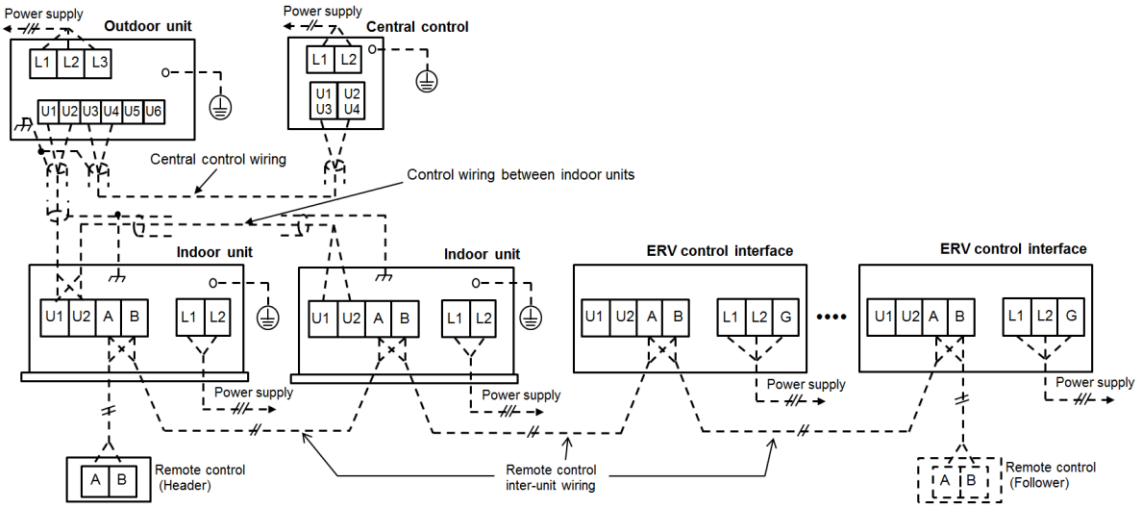

<Setting example>

Unit	DN code	Unit 1 (AC)	Unit 2 (AC)	Unit 3 (ERV)	Unit 4 (ERV)
Central address	DN 03	1	1	1	1
Line address	DN 12	1	1	31 (Fixed)	31 (Fixed)
Indoor address	DN 13	1	2	1	2
Group address	DN 14	1 (Header)	2 (Follower)	2 (Follower)	2 (Follower)
CN71 (Check Pin)		-	-	Open	Open

•Be sure to set central control address in header unit so that central control enables operation.

•Be sure to set as “Open” at CN71 on ERV control interface so that ERV becomes as follower.

■System configuration and setting for RAV (Light commercial)

ERV can be linked with the RAV series 1:1 ductless systems.

•The remote control for air conditioner or ERV can be used to ON/OFF the entire system.
•The remote control (RBC-AMS54E-UL) can control the fan speed of ERV.
•The remote control (RBC-AMT32UL) cannot change the fan speed of ERV.
•The remote control (RBC-AMS54E-UL, RBC- AMT32UL) can operate the ON/OFF control of ERV separately.
*Setting on site is required for separate ON/OFF control. Refer to “Advanced control” section.
•When two remote controls are used, the latter operation overrides the former and their indications always reflect the result of the latter operation. In addition, the indications of ERV always reflect the setting of the unit with the smallest indoor unit address number.
•Up to total 8 units of ERV and RAV indoor units are available in one group control.

[System example]

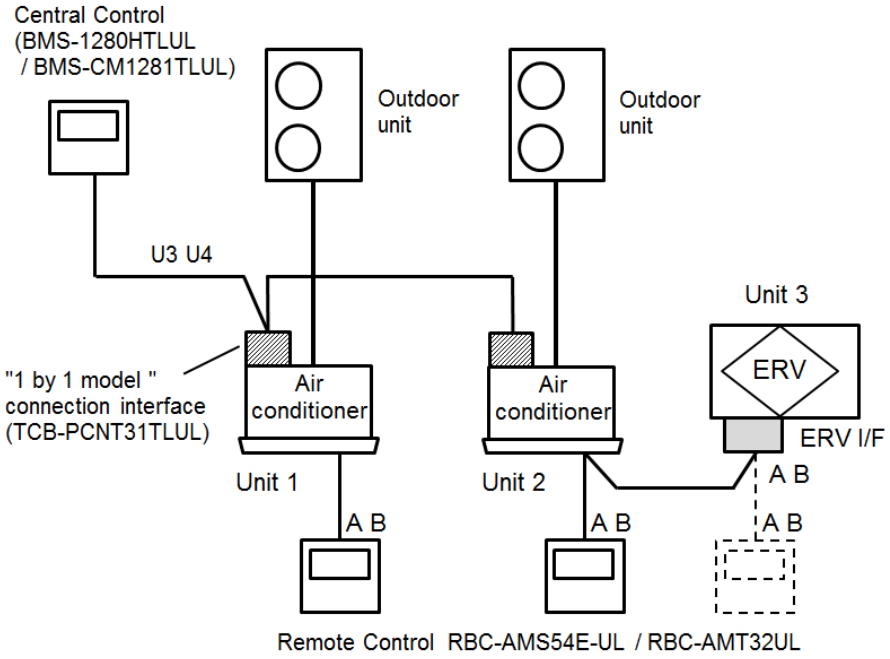

(Address setting example)

Unit	DN code	Unit 1 (RAV)	Unit 2 (RAV)	Unit 3 (ERV)
Central address	DN 03	1	2	2
Line address	DN 12	1	2	31 (Fixed)
Indoor address	DN 13	1	2	1
Group address	DN 14	1 (Header)	1 (Header)	2 (Follower)
CN71 (Check Pin)		-	-	Open

7 ADVANCED CONTROL

REQUIREMENT

- NOTE : Powering on the unit and interface for the first time, it takes time for the remote control to recognize the operation input. This is not a malfunction.
- For details on the auto address setting of air conditioners when operating together with VRF system (adjust the auto address setting on the circuit board of the outdoor interface)..
- Turn on the ERV system first. Refer to the installation manual of the air conditioner about its power supply.
- When shipped from the factory, all of the setting are set to [Factory default]. Change the setting using the main remote control (wired remote control).
- The settings cannot be changed using the wireless remote control, the sub remote control, or a system without a remote control (system with only the central remote control). Therefore, prepare the main remote control and install.

■External signal input / Remote control priority setting

Dip switch setting [SW501] enables ERV control by external signal input and priority setting between remote control and digital input signal.

Factory default : Bit1 / Bit2 = OFF / OFF

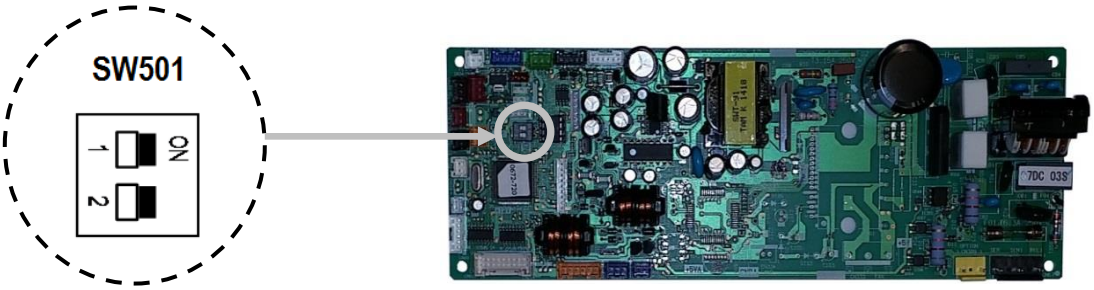

Input	SW501			
	Bit 1 (ON/OFF)		Bit 2 (Fan tap)	
	OFF	ON	OFF	ON
Remote control	ON/OFF	Not operable by remote prohibition	Fan speed setting	Not operable by remote prohibition
Central control	ON/OFF	ON/OFF	Not operable	Not operable
External Input	Not operable	ON/OFF	Not operable	Fan speed setting

(NOTE)

- This dip switch setting is in active once the power supply is reset.
- External signal input is active on header ERV or individual ERV system.
- External signal input is not active into the follower ERV interface.
  Be sure to input the external signal to header ERV or individual ERV system.

■ Functional setting by DN code

■ Changing of settings for applicable controls (DN code setting)

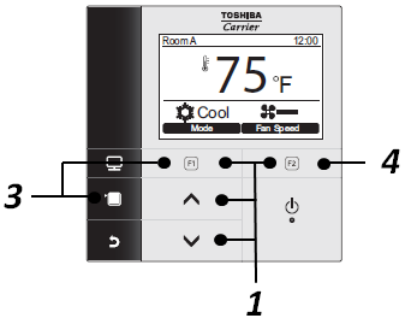

Basic procedure for changing settings
Change the settings while the air conditioner and ERV are not working.
(Be sure to stop the air conditioner before making settings).

Procedure 1

1. Push the **[∧] / [∨]** button to select "7. DN setting" on the "Field setting menu" screen.
2. Then push "Set" **[F2 F2]** button.
3. Move the cursor to select "DN code" with the "<" [F1] button.
4. Set "DN code" with the **[∧] / [∨]** button.
5. Move the cursor to select "data" with the **[F2 F2]** button, then set "data" with the **[∧] / [∨]** button.

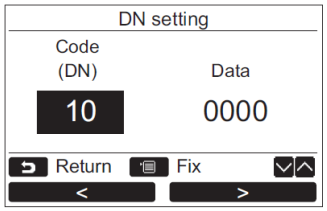

Procedure 2

Refer to this installation manual for details about the DN code and data.

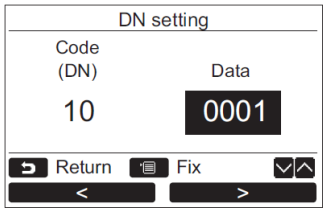

Procedure 3

1. Push the **[MENU]** button to set the other DN codes.
2. After "Continue?" is displayed on the screen, push the "Yes" **[F1 F1]** button.

Procedure 4

1. Push the "No" **[F2 F2]** button to finish the setting operation.
2. "⌛" appears on the screen for a while.
3. Then the screen returns to the "Field setting menu" screen.

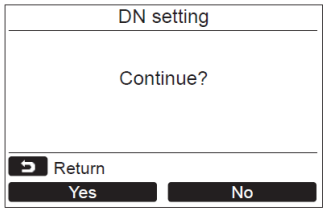

NOTE

- The line (system) address (DN12) is fixed as 31 for ERV control interface.
  This DN code setting is not shown on the remote control, but the remote control shows this line address on the monitor function.
- **Model type code (DN10) is 48 as ERV control interface.** Do not change this code.

■ Function code (DN code) setting

Code	Descriptions	SET DATA and description	Factory default	Note
01	Filter display delay timer	0000 : None 0001 : 150H 0002 : 2500H 0003 : 5000H 0004 : 10000H	0000 : None	
02	Dirty state of filter	0000 : Standard 0001 : High degree of dirt (Half of standard time)	0000 : Standard	
03	Central control address	0001 : No.1 unit to 0064 : No.64 unit, 0099 : Unfixed	0099 : Unfixed	
10	Model code	0048 : ERV control interface	0048	
12	Line (System) address	0031 : ERV control interface	0031 (Fixed)	Not shown on DN setting
13	Indoor address	0001 : No.1 unit to 0064 : No.64 unit	0001	
14	Group address	0000 : Individual 0001 : Header unit of group 0002 : Follower unit of group	0099 : Unset	Set by CN71 short pin
28	Automatic restart of power failure	0000 : None 0001 : Restart	0000 : None	
31	Ventilation fan control	0000 : Unavailable 0001 : Available	0000 : Unavailable	Set header air conditioner
32	Remote control sensor	0000 : Body 0001 : Remote control sensor	0000	
33	Temperature unit select	0000 : °C, 0001 : °F	0001 : °F	
47	Fan tap during 24-hour ventilation	0000 : Low 0001: Fan tap before ERV stop	0000 : Low	
49	24-hour ventilation	0000 : Invalid 0001 : Valid	0000 : Invalid	Set for all unit in group control
4A	24-hour ventilation ON/OFF ratio	0000 : 60 minutes ON / 60 minutes OFF	0000	Fan OFF during [60-DN] minutes.
4B	Delayed operation	0000 : Invalid 0001 or more : Delay time setting	0000 : Invalid	[DN set data] X 10 minutes
50	External signal input logic (ON/OFF)	0000 : Static, 0001 : Pulse	0000 : Static	
51	External signal input logic (High/Low)	0000 : Static, 0001 : Pulse	0000 : Static	
52	Signal output priority when “High” and “Low” are input simultaneously	0000 : “High” priority 0001 : “Low” priority 0002 : No output	0000 ; “High”	
53	Signal logic of alarm input	0000 : Normal open 0001 : Normal close	0000 : Normal Open	
92	Alarm clearance condition	0000 : Active when “ON/OFF”	0000 :	
E5	Available fan mode	0001 : High only 0002 : Low only 0003 : High and low	0003 : High and Low	
EB	Changing the ventilation fan speed	0002 : High 0003 : Low	2 : High	

- Adjusting the setting is necessary for the header unit when using a system equipped with the ERV control interface system only, assign ERV with the smallest indoor unit address number when using a system equipped with ERV and other indoor units.
- The Alarm generates when the alarm input signal continues for more than 1 minute.

■ Setting of Individual ERV ON/OFF (Setting for the header air conditioner)

Individual ERV ON/OFF is possible when the ERV operation is linked to air conditioners' operation.
RBC-AMS54E-UL: Individual ON/OFF by "Menu" > "Ventilation" > "ON/OFF"
RBC-AMT32UL: Individual ON/OFF by "VENT" button.
BMS-SM1280HTLUL/CM1281TLUL: Individual ON/OFF by "VENT" button.

- While ERV is in operation, "VENT" is displayed on the remote control (RBC-AMT32UL).
- Adjust the setting for the header air conditioner in the group.
- This setting is invalid when ERV system is used.

DN Code	Set Data	0000	0001
31	Ventilation fan control	Invalid (Factory default)	Valid

■ Setting 24-hour ventilation

24-hour ventilation is possible (intermittent ERV operation after remote control OFF).

- Adjust this setting for all ERVs in the group.
- The air volume of ventilation is half as much as that of "low" tap. (Ventilation at 60-minute intervals)
- When 24-hour ventilation is in operation, the 24-hour ventilation indicator is not displayed on RBC-AMT32UL. "24H" is indicated on RBC-AMS54E-UL in case of "detailed display mode".

DN Code	Set Data	0000	0001 or more
49	24-hour ventilation	Invalid (Factory default)	0001: Valid
4A	24-hour ventilation ON/OFF ratio	0000 : 60 minutes ON / 60 minutes OFF	Fan OFF during [60-DN] minutes.

■ Setting Delayed On operation (Delayed On operation of ERV when it operates link with air conditioners : Pre-cool / Pre-heat)

The operation of ERV is delayed by [setting value by DN 4B] X 10 minutes (10 to 60 minutes) when the [ON/OFF] button is pressed. (Available when ERV operation is linked with air conditioners' operation.

- Adjust this setting for all ERVs in the group. (only when ERV(s) operates together with air conditioners.
- This setting is invalid for a system equipped with ERV only.

DN Code	Set Data	0000	0001 or more
4B	Delayed operation	Invalid (Factory default)	Delayed time = [DN set data] X 10 minutes

■ Setting of external signal input logic

When [SW501] Dip Switch setting enables external signal input, signal input logic can be changed by DN code 50 to 53.

DN code	Description	SET DATA	Factory default
50	External signal input logic (ON/OFF)	0000 : Static, 0001 : Pulse	0 : Static
51	External signal input logic (High/Low)	0000 : Static, 0001 : Pulse	0 : Static
52	Signal output priority when "High" and "Low" are input simultaneously	0000 : "High" priority 0001 : "Low" priority 0002 : No output	0000 ; "High"
53	Signal logic of alarm input	0000 : Normal open 0001 : Normal close	0000 : Normal Open

8 TEST RUN

■ Preparation

- Before turning on the power supply, carry out the following procedure.
  1. Using 500V-Megger, check the resistance between the terminal block of the power supply and the earth (grounding). The resistance must by 1MΩ or more.
  2. If resistance of less than 1MΩ is detected, do not run the unit.
- When a test run is performed together with air conditioners, follow the installation manuals of the air conditioners.
- Never press the electromagnetic contactor to forcibly perform the test run. (This would be very dangerous because the protective device does not work).
- Before starting a test run, be sure to set addresses per the installation manual supplied with the outdoor unit.

■ Test operation (ERV individual system / ERV group control)

Refer to the section “9. OPERATION” for usage of remote control.

■ Performing the test mode (ERV system linked with air conditioner)

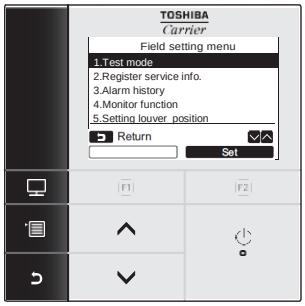

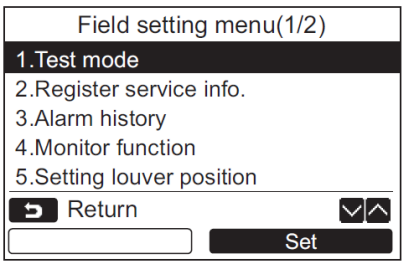

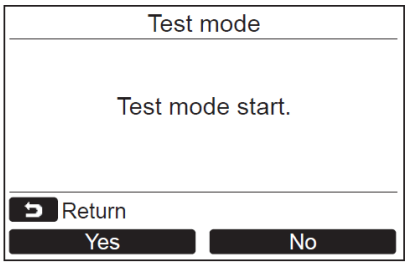

1 Push the [MENU] button to display the menu screen.

2 Push and hold the [MENU] button and the [∨] button at the same tine to display the “Filed setting menu”.
   ➔ Push and hold the buttons for more than 4 seconds.

3 Select “1 Test mode” on the “Field setting menu” screen, then push the “Set” [F2] button.
   ➔ Pushing the “Yes” [F1] button sets the test mode and the screen returns to the “Filed setting menu” screen.
   Push [CANECL] twice, the screen (2) appears.

(1)

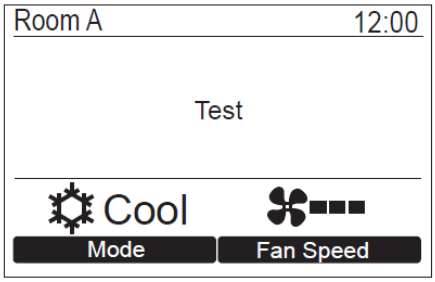

(2)

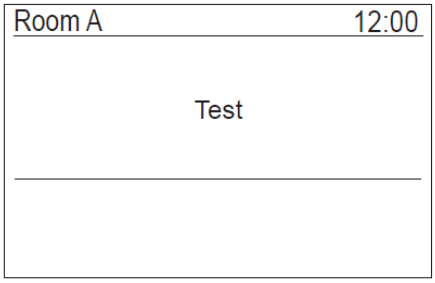

(3)

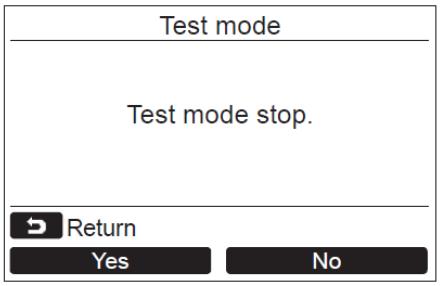

4. Push the **[ON/OFF]** button to start the test mode. The screen (1) shown in the left appears. (The screen (2) appears when the operation is stops.)
   →Perform the test mode in the "Cool" or "Heat" mode.

5. When test mode is finished, push the **[∧]** **[∨]** button to select "1. Test mode" on the "Field setting menu" screen, then push the "Set" **[F2]** button. The screen (3) appears.
   ➔ Pushing the "Yes" **[F1]** button stops the test mode screen and continues the normal operation.

Alternatively (using a wired remote controller), a forced test run can be executed in the procedure above mentioned even if the operation stops by thermo-OFF. In order to prevent a serial operation, the forced test run is released after 60 minutes have passed and returns to the usual operation.

⚠ CAUTION

- Do not use the forced test run for cases other than the test run because it applies excessive load to the devices.

9 OPERATION

■Parts names and functions (RBC-AMS54E-UL)

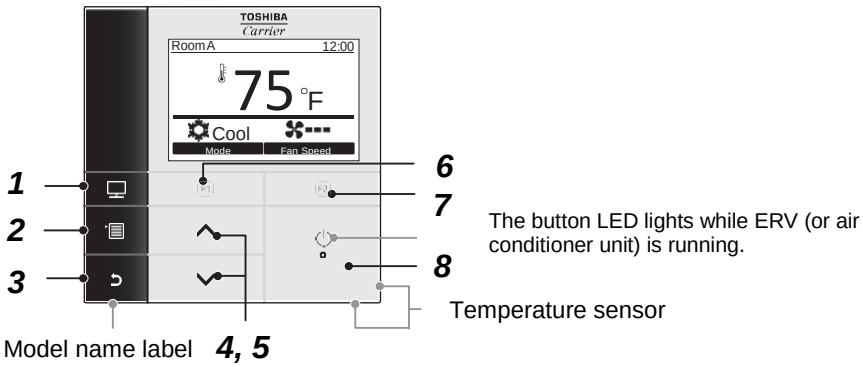

1 **[MONITOR]** button
Displays the monitoring screen.

2 **[MENU]** button
Displays the menu screen.

3 **[CANCEL]** button
Function as indicated on the screen, such as returning to the previous menu screen.

4 **[∧]** button
In case of ERV linked with air conditioner, adjust the temperature.
On the menu screen : selects a menu item.

5 **[∨]** button
In case of ERV linked with air conditioner, adjust the temperature.
On the menu screen : selects a menu item.

6 **[F1]** button
Varies its function according to the setting screen.

7 **[F2]** button
Varies its function according to the setting screen.

8 **[ON/OFF]** button

▼ Ventilation icon list

Ventilation icons appear on the display.

	Total heat exchange (ERV in active)	24H	24-hour ventilation mode

■Running operation

1 Push the **[ON/OFF]** button to start running.

2 The [Fan] mode only in ERV system displays. (No other mode appears.)

3 Push the **[ON/OFF]** button to stop running.

■Changing fan speed (Ventilation air volume)

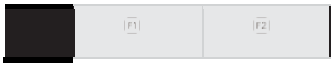

1 Push the "Fan Speed" **[F2]** button to select the fan speed.

➔ The fan speed changes as follows each time the button is pushed.

(High) → (Low)

➔ Fan speed change is not available when available fan speed is set by DN [E5] as one fan speed.

■Monitor screen

Check the current usage status.

1 Push **[MONITOR]** button.
The monitor screen appears.

2 Push **[CANCEL]** button to return.

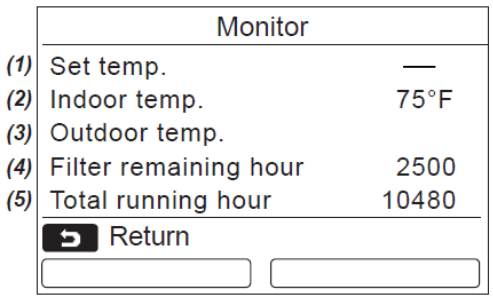

(1) Displays the set temperature (No value in ERV)
(2) Displays the temperature measured by remote control temperature sensor.
(DN code setting : DN32 ="0001" is necessary)
(3) Displays the temperature measured by the TO ambient air sensor within the outdoor unit.
(In case of ERV with air conditioner system only)
(4) Displays the remaining timer.
(5) Displays the accumulated operating time.

(NOTE)
When the [MONITOR] and [CANCELL] buttons are pushed simultaneously for more than 4 seconds, "detailed display mode" is displayed and the "Ventilation" mark and "24H" mark are shown when set.

■ Menu operation

1 Push **[MENU]** button.

2 Push the **[∧] [∨]** button to select an item.
➔ Selected item is highlighted.

3 Push the " Set" **[F2]** button.
➔ The setting screen appears

4 (To undo)
Push the **[CANCEL]** button to return.
➔ The screen returns to the previous screen.

*The menu screen returns to the normal display if no operation is performed for 60 seconds.

■ Ventilation (ERV control)

Set for the "**Ventilation (ERV) operation linked to the air conditioner**" system.

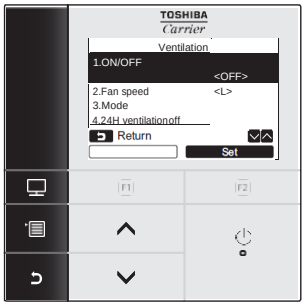

1 Select "11. Ventilation" on the menu screen, Then, push the "Set" **[F2]** button.

2 Push the **[∧] [∨]** button to select the item to set.

3 Push the " Set " **[F2]** button.

Item	Function
1.ON/OFF	The run and stop operation of ventilation (ERV)
2.Fan speed	Setting of the fan speed
3.Mode	(no use) "Heat Exchange mode" only
4.24H ventilation off	Setting of 24H ventilation operation stop time (Active only when DN code 49 is set as 0001.)

Operation (ON/OFF)

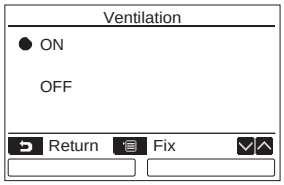

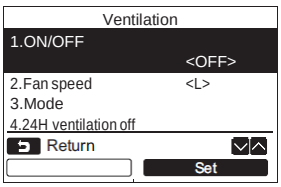

1 Push the **[∧] [∨]** button to select "1. ON/OFF" on the "Ventilation" screen, then push the , "Set" **[F2]** button.

2 Push the **[∧] [∨]** button to select "ON" or "OFF".

3 Push the **[MENU]** button.

➔ The screen returns to the "Ventilation setting" screen.

"Impossible" appears on the display when no ventilation unit is connected or the individual operation for the ventilation unit is not activated (DN code [31] setting).

Fan speed (High/Low)

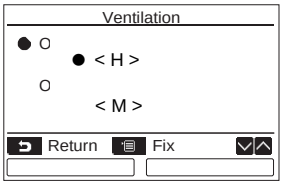

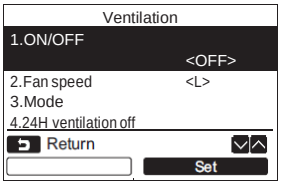

1 Push the **[^]** **[v]** button to select "2. Fan speed" on the "Ventilation" screen, then push the , "Set" **[F2]** button.

2 Push the **[^]** **[v]** button to select "H" or "M".

3 Push the **[MENU]** button.

➔ The screen returns to the "Ventilation setting" screen.

- <H> means "High", <M> means "Low"
- RBC-AMT32UL cannot set ventilation (ERV) fan speed from the remote control in case ERV system linked with the air conditioner.
- For high wall type and medium static ducted type the fan speed can be set by DN code [EB]. (Set data 0002:High, 0003:Low)

■Operation of ERV control interface from Smart BMS manager (BMS-SM1280HTLUL) / Central Remote control (BMS-CM1281TLUL)

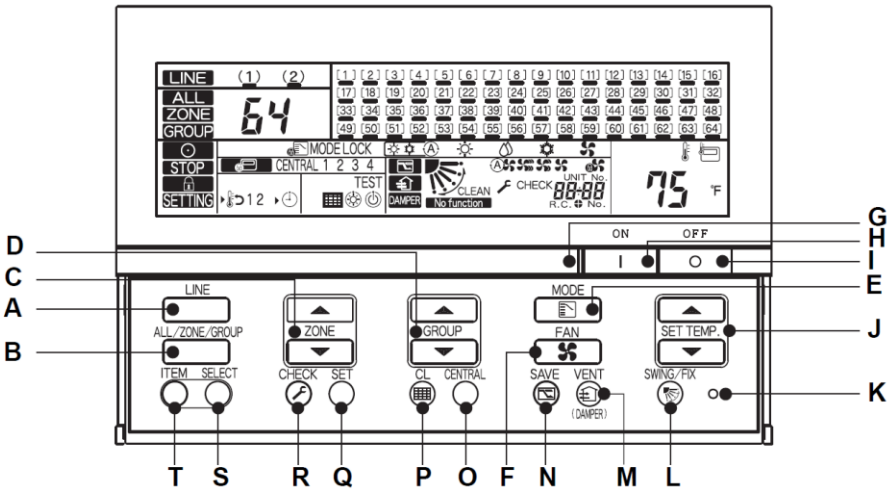

- For ERV control from smart BMS manager / central remote control, central control address (DN03) is necessary. If the ERV system is linked with air conditioners, set the central control address to the header air conditioner. (The follower ERV central control address automatically follow that of header air conditioner.)

H / I : ON, OFF ON/OFF Button

- The ERV ON/OFF is controlled by ON/OFF button as GROUP for the "ERV Individual system" and "ERV group control system" .

M : VENT VENT Button

- Individual ON/OFF of ERV in "the ERV system linked with air conditioners" is controlled by this VENT button. (DN code 31 set to "0001" set value is necessary in header indoor units for individual ERV ON/FF). When the ERV is running, is displayed..

- When the DN code 31 is set to "0000" and push the "VENT" button, No function appears on the display.

■Operation of ERV control interface from web control on Smart BMS manager (BMS-SM1280HTLUL)

•Smart BMS Manager can control and monitor the ERV control interface as well as air conditioners.

Setting method on “Setting file creation software”

•Choose “**Other**” and “**General purpose interface**” from the ERV control interface in indoor unit. Line address automatically becomes 31.
There is no need to input the “parent indoor unit number”, because ERV control interface is not connected to main BUS (U1/U2) in case group control or ERV linked with air conditioner.

.

Indoor unit selection display →

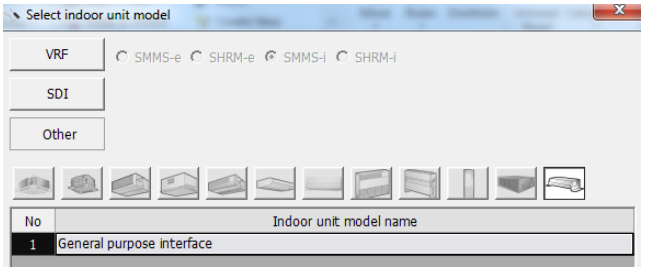

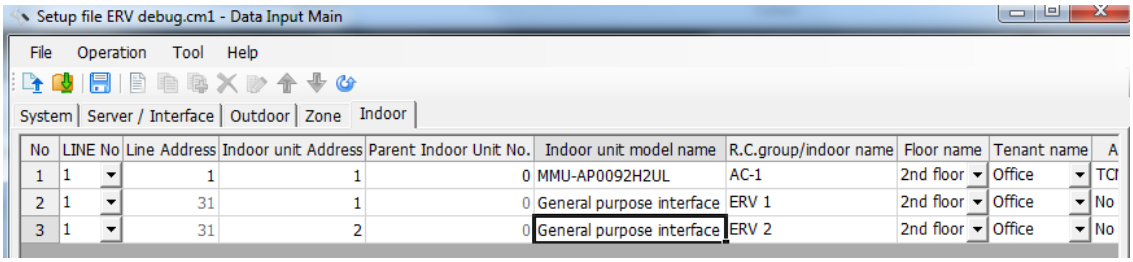

↑ Indoor unit data input display in setting file creation software

•If the ERV is linked with air conditioner, there is no need to specify ERV control interface on the indoor unit list since there is no main bus (U1/U2) connection to the follower unit.
•If the ERV group control, only input only header ERV interface, which is connected to main bus (U1/U2). There is no need to specify the follower ERV control interface in indoor unit list.

Operation through web browser

•Web browser enables ON/OFF of ERV control interface. If the ERV control interface has the setting of external signal ON/OFF (SW501 bit 1=ON), ON/OFF button includes “!” mark, but the web browser can command ON/OFF of ERV control interface.

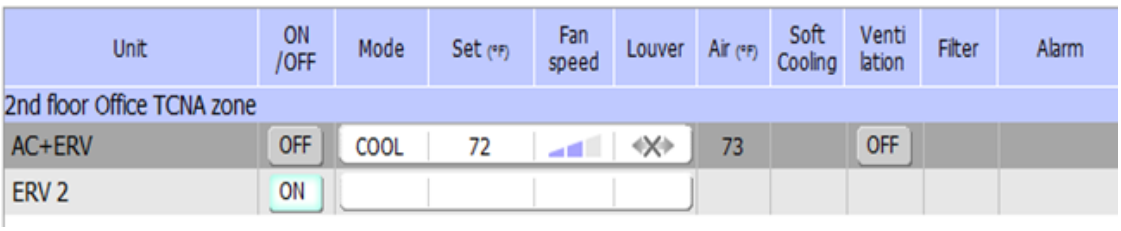

•If the ERV is linked with air conditioner, the follower ERV control interface is indicated on the "Ventilation" column. When DN31 is set to "0001", individual ERV ON/OFF can be controlled with the button "Ventilation" column and ON/OFF/Keep are shown in "Ventilation mode setting".
•When push the button on the "Ventilation" column is depressed and "Ventilation mode" is selected, there are other type of modes, but actual ventilation mode is always "Heat Exchange" mode.

Unit	ON /OFF	Mode	Set (°F)	Fan speed	Louver	Air (°F)	Soft Cooling	Venti lation	Filter	Alarm
2nd floor Office TCNA zone										
AC+ERV	ON	COOL	72			73		Heat		
AC	OFF	COOL	75			72				

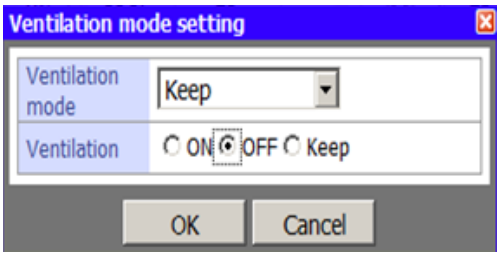

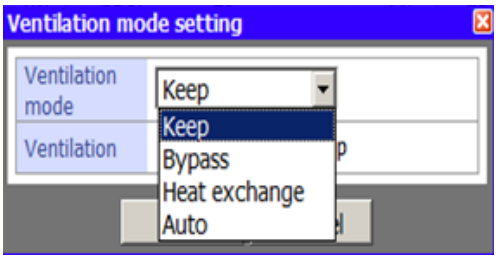

•When the 24 hour ventilation function is set (DN49 is set as 0001 at ERV control interface), "24H" symbol is shown on the web browser after turning off the air conditioner. (The fan output is still ON on the ERV control interface.)

Unit	ON /OFF	Mode	Set (°F)	Fan speed	Louver	Air (°F)	Soft Cooling	Venti lation	Filter	Alarm
2nd floor Office TCNA zone										
AC+ERV	OFF	COOL	72			73		24H		
AC	OFF	COOL	75			72				

10 TROUBLESHOOTING

■ Confirmation and Check

When a trouble occurs in the ERV (or air conditioner), the check code and the ERV (or air conditioner) number.

*The check code appears only while the unit is running.

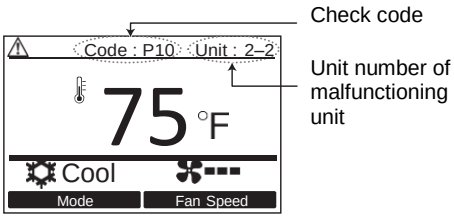

The check code is only displayed during the operation. Push the **[MONITOR]** button or **[CANCEL]** button to display the check information screen.

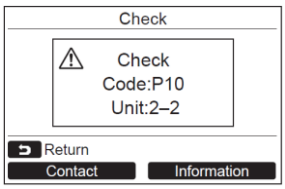

■ Check codes and parts to be checked

Remote control display	Main defective parts	Judging device	Parts to be checked / trouble description
E01	No header remote control	Remote control	Incorrect remote control setting --- The header remote control has not been set (including two remote controls.)
	Remote control communication trouble		No signal can be received from the indoor unit.
E02	Remote control transmission trouble	Remote control	System interconnection wires, indoor P.C. board, remote control –No signal can be sent to the indoor unit.
E03	Indoor unit – remote control regular communication trouble	Indoor unit	Remote control, Indoor P.C. board --- No data is received from the remote control.
E04	Indoor-outdoor communication trouble	Indoor unit	Main bus wiring, address setting, DN code setting (DN[0E] should be [0000])
E08	Duplicated indoor addresses	Indoor unit	Indoor address setting trouble --- The same address as the self-address was detected.
E09	Duplicated header remote control	Remote control	Remote control address setting trouble --- Two remote control are set as header in the double-remote control.
			(* The header indoor unit stops raising alarm and follower indoor units continue to operate.)
E18	Header indoor unit – indoor follower unit regular communication trouble	Indoor unit	Indoor P.C.board --- Regular communication is not possible between header and follower indoor units or between twin header and follower units.
F29	Indoor unit, other P.C. Board trouble	Indoor unit	Indoor P.C.board --- Faulty EEPROM
L03	Duplicated header indoor units	Indoor unit	Indoor address setting trouble --- Indoor address group has not been set.
L07	Connection of group control cable to standalone indoor unit	Indoor unit	Indoor address setting --- Connection of group control cable to stand-alone indoor unit.
L08	Indoor group address not set	Indoor unit	Indoor address setting trouble --- Indoor address group has not been set. Check DN code [0E] ([0E] should be [0000].
L09	Indoor power level not set	Indoor unit	Indoor power level has not been set.
L20	LAN communication trouble	Indoor unit	Address setting, central control remote control, --- Duplication of address in central control communication.
P31	Other indoor unit trouble	Indoor unit	Another indoor unit in the group is raising and alarm.
			E03/L03/L07/L08 alarm check locations and trouble description.

(Note) “Indoor” in “Judging device” refers to the ERV control interface” or air conditioner.

TOSHIBA CARRIER CORPORATION
336 TADEHARA, FUJI-SHI, SHIZUOKA-KEN 416-8521 JAPAN

EH99593101