AquaSnap® 30RAP010-150 Air-Cooled Chillers and 30RAP011-060 Air-Cooled Chillers with Greenspeed® Intelligence with Puron® Refrigerant (R-410A) 50/60 Hz

Controls, Start-Up, Operation, Service, and Troubleshooting

CONTENTS

Page

SAFETY CONSIDERATIONS 2,3
GENERAL 3-7
Conventions Used in this Manual 3
Basic Controls Usage 4
CONTROLS 7-50
General 7
Main Base Board (MBB) 26
Energy Management Module (EMM) 27
Current Sensor Board (CSB) 27
Auxiliary (AUX) Board 27
Expansion Valve Board (EXV) Board 27
Compressor Expansion Board (CXB) 27
Enable/Off/Remote Control Switch 27
Emergency On/Off Switch 27
Board Addresses 27
Control Module Communication 27
Carrier Comfort Network® (CCN) Interface 29
Alarm Control 29
Sensors 29
- COOLER LEAVING FLUID SENSOR
- COOLER ENTERING FLUID SENSOR
- COMPRESSOR RETURN GAS TEMPERATURE SENSOR
- OUTDOOR-AIR TEMPERATURE SENSOR (OAT)
- DISCHARGE TEMPERATURE THERMISTOR (DTT)
- REMOTE SPACE TEMPERATURE SENSOR OR DUAL LEAVING WATER TEMPERATURE SENSOR

Energy Management Module 31
Loss-of-Cooler Flow Protection 31
Electronic Expansion Valves (EXVs) 31
Capacity Control 31
- MINUTES LEFT FOR START
- MINUTES OFF TIME
- LEAD/LAG DETERMINATION
- LOADING SEQUENCE SELECT
- LOW AMBIENT LOCKOUT
- CAPACITY CONTROL OVERRIDES

Head Pressure Control 34
- MOTORMASTER V OPTION

High-Efficiency Variable Condenser Fans (HEVCF) 37
- FAN DRIVE OPERATION

Operation of Machine Based on Control Method and Cooling Set Point Selection Settings 38
Cooling Set Point Select 39
Ice Mode 39
Cooling Set Point (4 to 20 mA) 39
Low Sound Mode Operation 40
Heating Operation 40
Service Test 40
Optional Factory-Installed Hydronic Package 41
Cooler Pump Control 41
Cooler Pump Operation 41
Cooler Pump Sequence of Operation 41
Configuring and Operating Dual Chiller Control 43
Temperature Reset 43
Demand Limit 49
- DEMAND LIMIT (2-Stage Switch Controlled)
- EXTERNALLY POWERED DEMAND LIMIT (4 to 20 mA Controlled)
- DEMAND LIMIT (CCN Loadshed Controlled)

Digital Scroll Option 49
- DIGITAL SCROLL OPERATION
- DIGITAL COMPRESSOR CONFIGURATION

PRE-START-UP 51
System Check 51
START-UP AND OPERATION 51-53
Crankcase Heaters 51
Actual Start-Up 51
Check Refrigerant Charge 52
Charge Adjustment for Brine Operation 52
Operating Limitations 52
- COOLER FLOW RATES AND LOOP VOLUMES
- TEMPERATURES
- LOW AMBIENT OPERATION
- VOLTAGE — ALL UNITS

OPERATION SEQUENCE 53
SERVICE 54-75
Electronic Components 54
- CONTROL COMPONENTS

Electronic Expansion Valve (EXV) 54
EXV Troubleshooting Procedure 54
- FIELD SERVICING INSTRUCTIONS
- EXV VALVE REPLACEMENT
- VALVE MOTOR REPLACEMENT

Compressor Replacement 57
Crankcase Heater 59
Cooler 60
- BRAZED-PLATE COOLER HEAT EXCHANGER REPLACEMENT
- BRAZED-PLATE COOLER HEAT EXCHANGER CLEANING

Oil Charge 60
Microchannel Heat Exchanger (MCHX) Condenser Coil Maintenance and Cleaning Recommendations 61
Round Tube Plate Fin (RTPF) Condenser Coil Maintenance and Cleaning Recommendations 61
- REMOVE SURFACE LOADED FIBERS
- PERIODIC CLEAN WATER RINSE
- ROUTINE CLEANING OF COIL SURFACES

Check Refrigerant Feed Components 61
- FILTER DRIER
- MOISTURE-LIQUID INDICATOR
- MINIMUM LOAD VALVE
- PRESSURE RELIEF DEVICES

Manufacturer reserves the right to discontinue, or change at any time, specifications or designs without notice and without incurring obligations.

CONTENTS (Cont)

Page
Check Unit Safeties 62
- HIGH-PRESSURE SWITCH
- PRESSURE TRANSDUCERS
- COOLER FREEZE-UP PROTECTION
- HEATER CABLE
- WINTER SHUTDOWN

Thermistors 62
- REPLACING THERMISTORS (EWT, LWT, RGT)
- THERMISTOR/TEMPERATURE SENSOR CHECK

Pressure Transducers 67
- TROUBLESHOOTING

Chilled Water Flow Switch 67
Strainer 68
Condenser Fans 68
- METAL (VALUE SOUND) FANS
- AEROACOUSTIC™ (LOW SOUND) FANS

Motormaster® V Controller 70
- GENERAL OPERATION
- CONFIGURATION
- DRIVE PROGRAMMING
- EPM CHIP
- LOSS OF CCN COMMUNICATIONS
- REPLACING DEFECTIVE MODULES

Hydronic Package 74
- PUMP PERFORMANCE CHECK
- PUMP MODIFICATIONS AND IMPELLER TRIMMING
- RESET OF CHILLED WATER FLOW
- CHANGING PUMP SEALS
- VFD OPERATION

MAINTENANCE 75
Recommended Maintenance Schedule 75
Condenser Coil Maintenance and Cleaning Recommendations 75
Control Box Maintenance 75
TROUBLESHOOTING 76-96
Complete Unit Stoppage and Restart 76
- GENERAL POWER FAILURE
- UNIT ENABLE-OFF-Remote Control SWITCH IS OFF
- CHILLED FLUID PROOF-OF-FLOW SWITCH OPEN
- OPEN 24-V CONTROL CIRCUIT BREAKER(S)
- COOLING LOAD SATISFIED
- THERMISTOR FAILURE
- LOW SATURATED SUCTION
- COMPRESSOR SAFETIES

Motor Overload Protection 86
- COPELAND COMPRESSORS ELECTRICAL CODE TF (010-090)
- COPELAND COMPRESSORS ELECTRICAL CODE TW OR TE (010-090) OR DANFORTH COMPRESSOR (100-150)

Alarms and Alerts 92
APPENDIX A — DISPLAY TABLES 97-113
APPENDIX B — CCN TABLES 114-126
APPENDIX C — FACTORY SETTINGS FOR PUMP AND MANUAL STARTERS 127
APPENDIX D — BACNET COMMUNICATION OPTION 128-136
APPENDIX E — MAINTENANCE SUMMARY AND LOG SHEETS 137-139
INDEX 140, 141
START-UP CHECKLIST FOR 30RAP LIQUID CHILLER . . . . . CL-1 to CL-12

SAFETY CONSIDERATIONS

Installing, starting up, and servicing this equipment can be hazardous due to system pressures, electrical components, and equipment location (roof, elevated structures, mechanical rooms, etc.). Only trained, qualified installers and service mechanics should install, start up, and service this equipment.

When working on this equipment, observe precautions in the literature, and on tags, stickers, and labels attached to the equipment, and any other safety precautions that apply. Follow all safety codes. Wear safety glasses and work gloves. Use care in handling, rigging, and setting this equipment, and in handling all electrical components.

⚠ WARNING

Electrical shock can cause personal injury and death. Shut off all power to this equipment during installation. There may be more than one disconnect switch. Tag all disconnect locations to alert others not to restore power until work is completed.

⚠ WARNING

DO NOT VENT refrigerant relief valves within a building. Outlet from relief valves must be vented outdoors in accordance with the latest edition of ANSI/ASHRAE (American National Standards Institute/American Society of Heating, Refrigeration and Air-Conditioning Engineers) 15 (Safety Code for Mechanical Refrigeration). The accumulation of refrigerant in an enclosed space can displace oxygen and cause asphyxiation. Provide adequate ventilation in enclosed or low overhead areas. Inhalation of high concentrations of vapor is harmful and may cause heart irregularities, unconsciousness, or death. Misuse can be fatal. Vapor is heavier than air and reduces the amount of oxygen available for breathing. Product causes eye and skin irritation. Decomposition products are hazardous.

⚠ WARNING

DO NOT USE TORCH to remove any component. System contains oil and refrigerant under pressure.

To remove a component, wear protective gloves and goggles and proceed as follows:

a. Shut off electrical power to unit.
b. Recover refrigerant to relieve all pressure from system using both high-pressure and low pressure ports.
c. Traces of vapor should be displaced with nitrogen and the work area should be well ventilated. Refrigerant in contact with an open flame produces toxic gases.
d. Cut component connection tubing with tubing cutter and remove component from unit. Use a pan to catch any oil that may come out of the lines and as a gage for how much oil to add to the system.
e. Carefully unsweat remaining tubing stubs when necessary. Oil can ignite when exposed to torch flame.

Failure to follow these procedures may result in personal injury or death.

⚠ CAUTION

DO NOT re-use compressor oil or any oil that has been exposed to the atmosphere. Dispose of oil per local codes and regulations. DO NOT leave refrigerant system open to air any longer than the actual time required to service the equipment. Seal circuits being serviced and charge with dry nitrogen to prevent oil contamination when timely repairs cannot be completed. Failure to follow these procedures may result in damage to equipment.

⚠ CAUTION

This unit uses a microprocessor control system. Do not short or jumper between terminations on circuit boards or modules; control or board failure may result.

Be aware of electrostatic discharge (static electricity) when handling or making contact with circuit boards or module connections. Always touch a chassis (grounded) part to dissipate body electrostatic charge before working inside control center.

Use extreme care when handling tools near boards and when connecting or disconnecting terminal plugs. Circuit boards can easily be damaged. Always hold boards by the edges and avoid touching components and connections.

This equipment uses, and can radiate, radio frequency energy. If not installed and used in accordance with the instruction manual, it may cause interference to radio communications. It has been tested and found to comply with the limits for a Class A computing device pursuant to International Standard in North America EN61000-2/3 which are designed to provide reasonable protection against such interference when operated in a commercial environment. Operation of this equipment in a residential area is likely to cause interference, in which case the user, at his own expense, will be required to take whatever measures may be required to correct the interference.

Always store and transport replacement or defective boards in anti-static shipping bag.

⚠ CAUTION

To prevent potential damage to heat exchanger, always run fluid through heat exchanger when adding or removing refrigerant charge. Use appropriate brine solutions in cooler fluid loop to prevent the freezing of brazed plate heat exchanger, optional hydronic section, and/or interconnecting piping when the equipment is exposed to temperatures below 32 F (0° C). Proof of flow switch and strainer are factory installed on all models. Do NOT remove power from this chiller during winter shutdown periods without taking precaution to remove all water from heat exchanger and optional hydronic system. Failure to properly protect the system from freezing may constitute abuse and may void warranty.

⚠ CAUTION

Compressors and optional hydronic system pumps require specific rotation. For non-HEVCF (high-efficiency variable condenser fan) units, test condenser fan(s) first to ensure proper phasing. Swap any two incoming power leads to correct condenser fan rotation before starting any other motors. For HEVCF units, check to ensure the supply power phase rotation is clockwise A-B-C (L1-L2-L3).

⚠ CAUTION

Refrigerant charge must be removed slowly to prevent loss of compressor oil that could result in compressor failure.

⚠ CAUTION

Puron® refrigerant (R-410A) systems operate at higher pressures than standard R-22 systems. Do not use R-22 service equipment or components on Puron refrigerant equipment. If service equipment is not rated for Puron refrigerant, equipment damage or personal injury may result.

GENERAL

This publication contains Controls, Start-Up, Operation, Service, and Troubleshooting information for the AquaSnap® 30RAP air-cooled chillers. See Table 1. These chillers are equipped with *Comfort*Link controls and electronic expansion valves (EXVs).

Conventions Used in This Manual — The following conventions for discussing configuration points for the local display (scrolling marquee or Navigator™ accessory) will be used in this manual.

Point names will be written with the mode name first, then any sub-modes, then the point name, each separated by an arrow symbol (→). Names will also be shown in bold and italics. As an example, the Lead/Lag Circuit Select Point, which is located in the Configuration mode, Option sub-mode, would be written as ***Configuration →OPT2→LLCS***.

This path name will show the user how to navigate through the local display to reach the desired configuration. The user would scroll through the modes and sub-modes using the ▲ and ▼ keys. The arrow symbol in the path name represents pressing ENTER to move into the next level of the menu structure.

When a value is included as part of the path name, it will be shown at the end of the path name after an equals sign. If the value represents a configuration setting, an explanation will be shown in parentheses after the value. As an example, ***Configuration→OPT2→LLCS* = 1** (Automatic).

Pressing the ESCAPE and ENTER keys simultaneously will scroll an expanded text description of the point name or value across the display. The expanded description is shown in the local display tables but will not be shown with the path names in text.

The CCN (Carrier Comfort Network®) point names are also referenced in the local display tables for users configuring the unit with CCN software instead of the local display. The CCN tables are located in Appendix B of the manual.

Table 1 — Unit Sizes

UNIT	NOMINAL CAPACITY (TONS)
30RAP010	10
30RAP011	10
30RAP015	14
30RAP016	14
30RAP018	16
30RAP020	19
30RAP025	24
30RAP030	28
30RAP035	34
30RAP040	39
30RAP045	43
30RAP050	48
30RAP055	52
30RAP060	56
30RAP070	69
30RAP080	77
30RAP090	85
30RAP100	99
30RAP115	112
30RAP130	126
30RAP150	140

Basic Controls Usage

SCROLLING MARQUEE DISPLAY — The scrolling marquee display is the standard interface display to the *Comfort*Link Control System for 30RAP units. The display has up and down arrow keys, an ENTER key, and an ESCAPE key. These keys are used to navigate through the different levels of the display structure. Press the ESCAPE key until the highest operating level is displayed to move through the top 11 mode levels indicated by LEDs (light-emitting diodes) on the left side of the display. See Fig. 1 and Table 2.

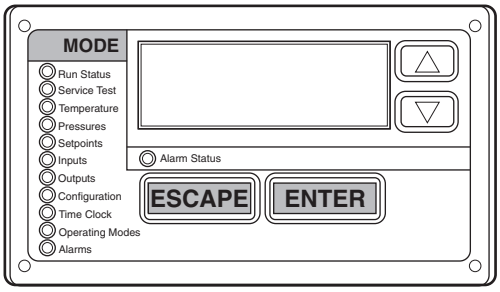

Fig. 1 — Scrolling Marquee Display

Once within a mode or sub-mode, pressing the ENTER and ESCAPE keys simultaneously will put the scrolling marquee display into expanded text mode where the full meaning of all sub-modes and items and their values can be displayed for the current selection. Press the ENTER and ESCAPE keys to return the scrolling marquee display to its default menu of rotating display items (those items in ***Run Status→VIEW***). In addition, the password will be disabled, requiring that it be entered again before changes can be made to password protected items. Press the ESCAPE key to exit out of the expanded text mode.

NOTE: When the Language Selection (***Configuration→DISP→LANG***), variable is changed, all appropriate display expansions will immediately change to the new language. No power-off or control reset is required when reconfiguring languages.

When a specific item is located, the item name alternates with the value. Press the ENTER key at a changeable item and the value will be displayed. Press ENTER again and the value will begin to flash indicating that the value can be changed. Use the up and down arrow keys to change the value, and confirm the value by pressing the ENTER key.

Changing item values or testing outputs is accomplished in the same manner. Locate and display the desired item. Press ENTER so that the item value flashes. Use the arrow keys to change the value or state and press the ENTER key to accept it. Press the ESCAPE key to return to the next higher level of structure. Repeat the process as required for other items.

Items in the Configuration and Service Test modes are password protected. The words “PASS” and “WORD” will alternate on the display when required. The default password is 1111. Press ENTER and the 1111 password will be displayed. Press ENTER again and the first digit will begin to flash. Use the arrow keys to change the number and press ENTER to accept the digit. Continue with the remaining digits of the password. The password can only be changed through CCN operator interface software such as ComfortWORKS™, ComfortVIEW™, and Service Tool.

Configuration value cannot be changed while the unit is enabled. Remote Control-Off-Enable must be in the Off position in order to change any configuration mode.

See Table 2 and Appendix A for further details. See Table 3 for a description of operating modes.

Table 2 — Scrolling Marquee Display Menu Structure*

MODE	RUN STATUS	SERVICE TEST	TEMPERATURES	PRESSURES	SET POINTS	INPUTS	OUTPUTS	CONFIGURATION	TIME CLOCK	OPERATING MODES	ALARMS
SUB-MODE	Auto View of Run Status (VIEW)	Service Test Mode (TEST)	Ent and Leave Unit Temps (UNIT)	Pressures Ckt A (PRC.A)	Cooling Setpoints (COOL)	General Inputs (GEN.I)	General Outputs (GEN.O)	Display Configuration (DISP)	Time of Day (TIME)	Modes (MODE)	Current (CRNT)
	Unit Run Hour and Start (RUN)	Outputs and Pumps (OUTS)	Temperatures Ckt A (CIR.A)	Pressures Ckt B (PRC.B)	Head Pressure Setpoint (HEAD)	Circuit Inputs (CRCT)	Outputs Circuit A EXV (A.EXV)	Unit Configuration (UNIT)	Month, Date, Day, and Year (DATE)		Reset Alarms (RCRN)
	Compressor Run Hours (HOUR)	Circuit A Comp Test (CMPA)	Temperatures Ckt B (CIR.B)		Brine Freeze Setpoint (FRZ)	4-20mA Inputs (4-20)	Outputs Circuit B EXV (B.EXV)	Unit Options 1 Hardware (OPT1)	Daylight Savings Time (DST)		Alarm History (HIST)
	Compressor Starts (STRT)	Circuit B Comp Test (CMPB)					Outputs Circuit A (CIR.A)	Unit Options 2 Controls (OPT2)	Local Holiday Schedules (HOL.L)		
	Preventive Maintenance (PM)						Outputs Circuit B (CIR.B)	CCN Network Configuration (CCN)	Schedule Number (SCH.N)		
	Software Version (VERS)							Cir. A EXV Configuration (EXV.A)	Local Occu-pancy Schedule (SCH.L)		
								Cir. B EXV Configuration (EXV.B)	Schedule Override (OVR)		
								Motormaster Configuration (MM)			
								Reset Cool Temp (RSET)			
								Set Point and Ramp Load (SLCT)			
								Service Configuration (SERV)			
								Broadcast Configuration (BCST)			

LEGEND

Ckt — Circuit

*Throughout this text, the location of items in the menu structure will be described in the following format:

Item Expansion (Mode Name→Sub-mode Name→ITEM)

For example, using the language selection item:

Language Selection (***Configuration→DISP→LANG***)

NOTE: If the unit has a single circuit, the Circuit B items will not appear in the display, except the ability to configure circuit B will be displayed.

Table 3 — Operating Modes

MODE NO.	ITEM EXPANSION	DESCRIPTION
01	CSM CONTROLLING CHILLER	Chillervisor System Manager (CSM) is controlling the chiller.
02	WSM CONTROLLING CHILLER	Water System Manager (WSM) is controlling the chiller.
03	MASTER/SLAVE CONTROL	Dual Chiller control is enabled.
05	RAMP LOAD LIMITED	Ramp load (pull-down) limiting in effect. In this mode, the rate at which leaving fluid temperature is dropped is limited to a predetermined value to prevent compressor overloading. See Cooling Ramp Loading (***Configuration→SLCT→CRMP***). The pull-down limit can be modified, if desired, to any rate from 0.2° F to 2° F (0.1° to 1° C)/minute.
06	TIMED OVERRIDE IN EFFECT	Timed override is in effect. This is a 1 to 4 hour temporary override of the programmed schedule, forcing unit to Occupied mode. Override can be implemented with unit under Local (Enable) or CCN (Carrier Comfort Network®) control. Override expires after each use.
07	LOW COOLER SUCTION TEMPA	Circuit A cooler Freeze Protection mode. At least one compressor must be on, and the Saturated Suction Temperature is not increasing greater than 1.1° F (0.6° C) in 10 seconds. If the saturated suction temperature is less than the Brine Freeze Point (***Set Points→FRZ →BR.FZ***) minus 6° F (3.4° C) and less than the leaving fluid temperature minus 14° F (7.8° C) for 2 minutes, a stage of capacity will be removed from the circuit. Or, If the saturated suction temperature is less than the Brine Freeze Point minus 14° F (7.8° C), for 90 seconds, a stage of capacity will be removed from the circuit. The control will continue to decrease capacity as long as either condition exists.
08	LOW COOLER SUCTION TEMPB	Circuit B cooler Freeze Protection mode. At least one compressor must be on, and the Saturated Suction Temperature is not increasing greater than 1.1° F (0.6° C) in 10 seconds. If the saturated suction temperature is less than the Brine Freeze Point (***Set Points→FRZ →BR.FZ***) minus 6° F (3.4° C) and less than the leaving fluid temperature minus 14° F (7.8° C) for 2 minutes, a stage of capacity will be removed from the circuit. If the saturated suction temperature is less than the Brine Freeze Point minus 14° F (7.8° C) for 90 seconds, a stage of capacity will be removed from the circuit. The control will continue to decrease capacity as long as either condition exists.
09	SLOW CHANGE OVERRIDE	Slow change override is in effect. The leaving fluid temperature is close to and moving towards the control point.
10	MINIMUM OFF TIME ACTIVE	Chiller is being held off by Minutes Off Time (***Configuration→OPT2→DELY***).
13	DUAL SETPOINT	Dual Set Point mode is in effect. Chiller controls to Cooling Set Point 1 (***Set Points→COOL →CSP.1***) during occupied periods and Cooling Set Point 2 (***Set Points →COOL→CSP.2***) during unoccupied periods.
14	TEMPERATURE RESET	Temperature reset is in effect. In this mode, chiller is using temperature reset to adjust leaving fluid set point upward and is currently controlling to the modified set point. The set point can be modified based on return fluid, outdoor-air-temperature, space temperature, or 4 to 20 mA signal.
15	DEMAND/SOUND LIMITED	Demand limit is in effect. This indicates that the capacity of the chiller is being limited by demand limit control option. Because of this limitation, the chiller may not be able to produce the desired leaving fluid temperature. Demand limit can be controlled by switch inputs or a 4 to 20 mA signal.
16	COOLER FREEZE PROTECTION	Cooler fluid temperatures are approaching the Freeze point (see Alarms and Alerts section for definition). The chiller will be shut down when either fluid temperature falls below the Freeze point.
17	LOW TEMPERATURE COOLING	Chiller is in Cooling mode and the rate of change of the leaving fluid is negative and decreasing faster than -0.5° F per minute. Error between leaving fluid and control point exceeds fixed amount. Control will automatically unload the chiller if necessary.
18	HIGH TEMPERATURE COOLING	Chiller is in Cooling mode and the rate of change of the leaving fluid is positive and increasing. Error between leaving fluid and control point exceeds fixed amount. Control will automatically load the chiller if necessary to better match the increasing load.
19	MAKING ICE	Chiller is in an unoccupied mode and is using Cooling Set Point 3 (***Set Points →COOL →CSP.3***) to make ice. The ice done input to the Energy Management Module (EMM) is open.
20	STORING ICE	Chiller is in an unoccupied mode and is controlling to Cooling Set Point 2 (***Set Points →COOL →CSP.2***). The ice done input to the Energy Management Module (EMM) is closed.
21	HIGH SCT CIRCUIT A	Chiller is in a Cooling mode and the Saturated Condensing Temperature (SCT) is greater than the calculated maximum limit. No additional stages of capacity will be added. Chiller capacity may be reduced if SCT continues to rise to avoid high-pressure switch trips by reducing condensing temperature.
22	HIGH SCT CIRCUIT B	Chiller is in a Cooling mode and the Saturated Condensing Temperature (SCT) is greater than the calculated maximum limit. No additional stages of capacity will be added. Chiller capacity may be reduced if SCT continues to rise to avoid high-pressure switch trips by reducing condensing temperature.
23	MINIMUM COMP ON TIME	Cooling load may be satisfied, however control continues to operate compressor to ensure proper oil return. May be an indication of oversized application, low fluid flow rate or low loop volume.
24	PUMP OFF DELAY TIME	Cooling load is satisfied, however cooler pump continues to run for the number of minutes set by the configuration variable Cooler Pump Shutdown Delay (***Configuration→OPT1 →PM.DY***).
25	LOW SOUND MODE	Chiller operates at higher condensing temperature and/or reduced capacity to minimize overall unit noise during evening/night hours (***Configuration→OPT2→LS.MD***).
AO	CIRCUIT A TRIO OIL MGMT	Additional stage of capacity is added if circuit operates with only one compressor for an accumulated time of 60 minutes.
BO	CIRCUIT B TRIO OIL MGMT	
OL	OAT LOCKOUT IN EFFECT	Chiller will not start due to OAT less than OAT lockout temperature set point (***Set Points→COOL→OAT.L***).

ACCESSORY NAVIGATOR™ DISPLAY MODULE — The Navigator module provides a mobile user interface to the *Comfort*Link control system, which is only available as a field-installed accessory. The display has up and down arrow keys, an ENTER key, and an ESCAPE key. These keys are used to navigate through the different levels of the display structure. Press the ESCAPE key until "Select a Menu Item" is displayed to move through the top 11 mode levels indicated by LEDs on the left side of the display. See Fig. 2.

Once within a Mode or sub-mode, a ">" indicates the currently selected item on the display screen. Pressing the ENTER and ESCAPE keys simultaneously will put the Navigator module into expanded text mode where the full meaning of all sub-modes and items and their values can be displayed. Pressing the ENTER and ESCAPE keys when the display says "Select Menu Item" (Mode LED level) will return the Navigator module to its default menu of rotating display items (those items in ***Run Status→VIEW***). In addition, the password will be disabled, requiring that it be entered again before changes can be made to password protected items. Press the ESCAPE key to exit out of the expanded text mode.

NOTE: When the Language Selection (***Configuration→DISP→LANG***) variable is changed, all appropriate display expansions will immediately change to the new language. No power-off or control reset is required when reconfiguring languages.

When a specific item is located, the item name appears on the left of the display, the value will appear near the middle of the display, and the units (if any) will appear on the far right of the display. Press the ENTER key at a changeable item and the value will begin to flash. Use the up and down arrow keys to change the value, and confirm the value by pressing the ENTER key.

Changing item values or testing outputs is accomplished in the same manner. Locate and display the desired item. Press ENTER so that the item value flashes. Use the arrow keys to change the value or state and press the ENTER key to accept it. Press the ESCAPE key to return to the next higher level of structure. Repeat the process as required for other items.

Items in the Configuration and Service Test modes are password protected. The words **Enter Password** will be displayed when required, with 1111 also being displayed. The default password is 1111. Use the arrow keys to change the number and press ENTER to enter the digit. Continue with the remaining digits of the password. The password can only be changed through CCN operator interface software such as ComfortWORKS, ComfortVIEW, and Service Tool.

Adjusting the Contrast — The contrast of the display can be adjusted to suit ambient conditions. To adjust the contrast of the Navigator module, press the ESCAPE key until the display reads, "Select a menu item." Using the arrow keys move to the Configuration mode. Press ENTER to obtain access to this mode. The display will read:

> TEST	OFF
METR	OFF
LANG	ENGLISH

Pressing ENTER will cause the "OFF" to flash. Use the up or down arrow to change "OFF" to "ON". Pressing ENTER will illuminate all LEDs and display all pixels in the view screen. Pressing ENTER and ESCAPE simultaneously allows the user to adjust the display contrast. Use the up or down arrows to adjust the contrast. The screen's contrast will change with the adjustment. Press ENTER to accept the change. The Navigator module will keep this setting as long as it is plugged in to the LEN (local equipment network) bus.

Adjusting the Backlight Brightness — The backlight of the display can be adjusted to suit ambient conditions. The factory default is set to the highest level. To adjust the backlight of the Navigator module, press the ESCAPE key until the display reads, "Select a menu item". Using the arrow keys move to the Configuration mode. Press ENTER to obtain access to this mode. The display will read:

> TEST	OFF
METR	OFF
LANG	ENGLISH

Pressing ENTER will cause the "OFF" to flash. Use the up or down arrow keys to change "OFF" to "ON". Pressing ENTER will illuminate all LEDs and display all pixels in the view screen. Pressing the up and down arrow keys simultaneously allows the user to adjust the display brightness. Use the up or down arrow keys to adjust screen brightness. Press ENTER to accept the change. The Navigator module will keep this setting as long as it is plugged in to the LEN bus.

Fig. 2 — Accessory Navigator™ Display Module

CONTROLS

General — The 30RAP air-cooled scroll chillers contain the *Comfort*Link electronic control system that controls and monitors all operations of the chiller.

The control system is composed of several components as listed in sections starting on page 26. See Fig. 3-5 for typical control box drawings. See Fig. 6-19 for wiring. Table 4 lists the drawings by unit size.

Table 4 — Component, Power, and Control Drawings

UNIT	DESCRIPTION	LOCATION
30RAP010	Typical Control Box	Fig. 3, page 9
	Power Wiring Schematic	Fig. 6, page 12
	Control Wiring Schematic	Fig. 7, page 13
30RAP011	Typical Control Box	Fig. 3, page 9
	Power Wiring Schematic	Fig. 8, page 14
	Control Wiring Schematic	Fig. 9, page 15
30RAP015	Typical Control Box	Fig. 3, page 9
	Power Wiring Schematic	Fig. 6, page 12
	Control Wiring Schematic	Fig. 7, page 13
30RAP016	Typical Control Box	Fig. 3, page 9
	Power Wiring Schematic	Fig. 8, page 14
	Control Wiring Schematic	Fig. 9, page 15
30RAP018	Typical Control Box	Fig. 3, page 9
	Power Wiring Schematic	Fig. 10, page 16
	Control Wiring Schematic	Fig. 11, page 17
30RAP020	Typical Control Box	Fig. 3, page 9
	Power Wiring Schematic	Fig. 10, page 16
	Control Wiring Schematic	Fig. 11, page 17
30RAP025	Typical Control Box	Fig. 3, page 9
	Power Wiring Schematic	Fig. 10, page 16
	Control Wiring Schematic	Fig. 11, page 17
30RAP030	Typical Control Box	Fig. 3, page 9
	Power Wiring Schematic	Fig. 10, page 16
	Control Wiring Schematic	Fig. 11, page 17
30RAP035	Typical Control Box	Fig. 4, page 10
	Power Wiring Schematic	Fig. 12, page 18
	Control Wiring Schematic	Fig. 13, page 19
30RAP040	Typical Control Box	Fig. 4, page 10
	Power Wiring Schematic	Fig. 12, page 18
	Control Wiring Schematic	Fig. 13, page 19
30RAP045	Typical Control Box	Fig. 4, page 10
	Power Wiring Schematic	Fig. 12, page 18
	Control Wiring Schematic	Fig. 13, page 19
30RAP050	Typical Control Box	Fig. 4, page 10
	Power Wiring Schematic	Fig. 12, page 18
	Control Wiring Schematic	Fig. 13, page 19
30RAP055	Typical Control Box	Fig. 4, page 10
	Power Wiring Schematic	Fig. 12, page 18
	Control Wiring Schematic	Fig. 13, page 19
30RAP060	Typical Control Box	Fig. 4, page 10
	Power Wiring Schematic	Fig. 12, page 18
	Control Wiring Schematic	Fig. 13, page 19
30RAP070	Typical Control Box	Fig. 5, page 11
	Power Wiring Schematic	Fig. 14, page 20
	Control Wiring Schematic	Fig. 15, page 21
30RAP080	Typical Control Box	Fig. 5, page 11
	Power Wiring Schematic	Fig. 14, page 20
	Control Wiring Schematic	Fig. 15, page 21
30RAP090	Typical Control Box	Fig. 5, page 11
	Power Wiring Schematic	Fig. 14, page 20
	Control Wiring Schematic	Fig. 15, page 21
30RAP100	Typical Control Box	Fig. 5, page 11
	Power Wiring Schematic	Fig. 16, page 22
	Control Wiring Schematic	Fig. 17, page 23
30RAP115	Typical Control Box	Fig. 5, page 11
	Power Wiring Schematic	Fig. 16, page 22
	Control Wiring Schematic	Fig. 17, page 23
30RAP130	Typical Control Box	Fig. 5, page 11
	Power Wiring Schematic	Fig. 18, page 24
	Control Wiring Schematic	Fig. 19, page 25
30RAP150	Typical Control Box	Fig. 5, page 11
	Power Wiring Schematic	Fig. 18, page 24
	Control Wiring Schematic	Fig. 19, page 25

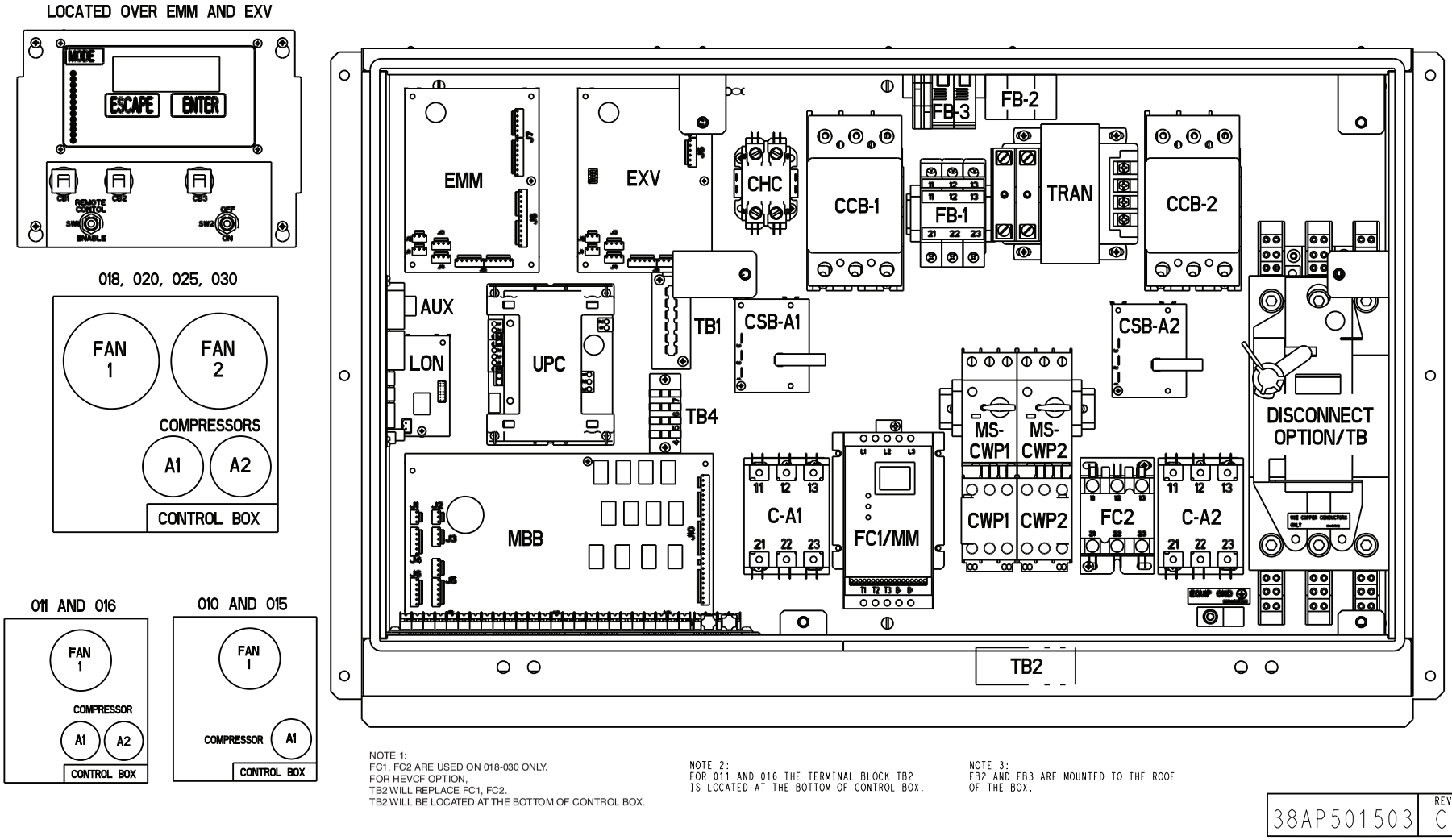

NOTE 1:
FC1, FC2 ARE USED ON 018-030 ONLY.
FOR HEVCF OPTION,
TB2 WILL REPLACE FC1, FC2.
TB2 WILL BE LOCATED AT THE BOTTOM OF CONTROL BOX.

NOTE 2:
FOR 011 AND 016 THE TERMINAL BLOCK TB2
IS LOCATED AT THE BOTTOM OF CONTROL BOX.

NOTE 3:
FB2 AND FB3 ARE MOUNTED TO THE ROOF
OF THE BOX.

38AP501503 REV C

Fig. 3 — Typical Control Box for 30RAP010-030

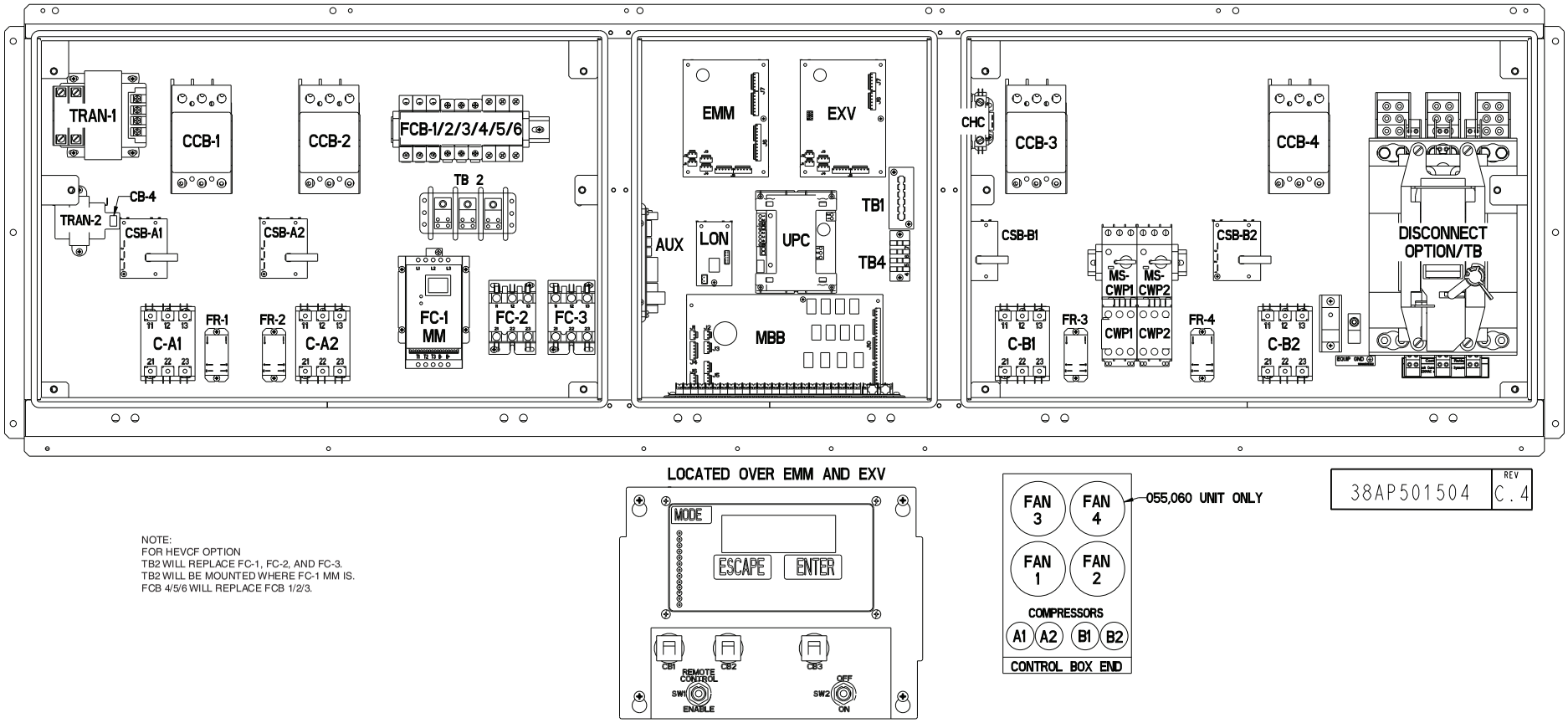

NOTE:
FOR HEVCF OPTION
TB2 WILL REPLACE FC-1, FC-2, AND FC-3.
TB2 WILL BE MOUNTED WHERE FC-1 MM IS.
FCB 4/5/6 WILL REPLACE FCB 1/2/3.

Fig. 4 — Typical Control Box for 30RAP035-060

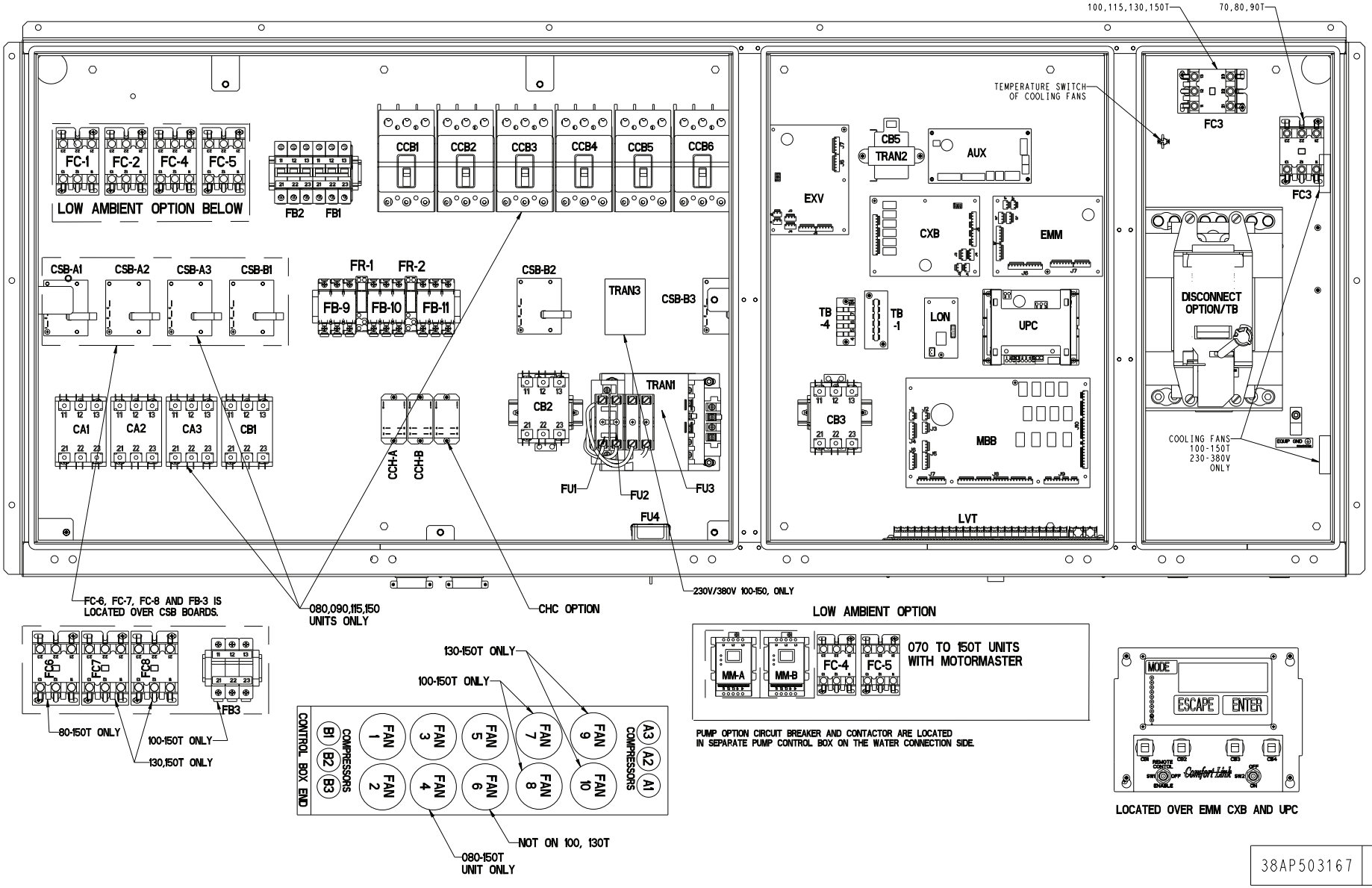

Fig. 5 — Typical Control Box for 30RAP070-150

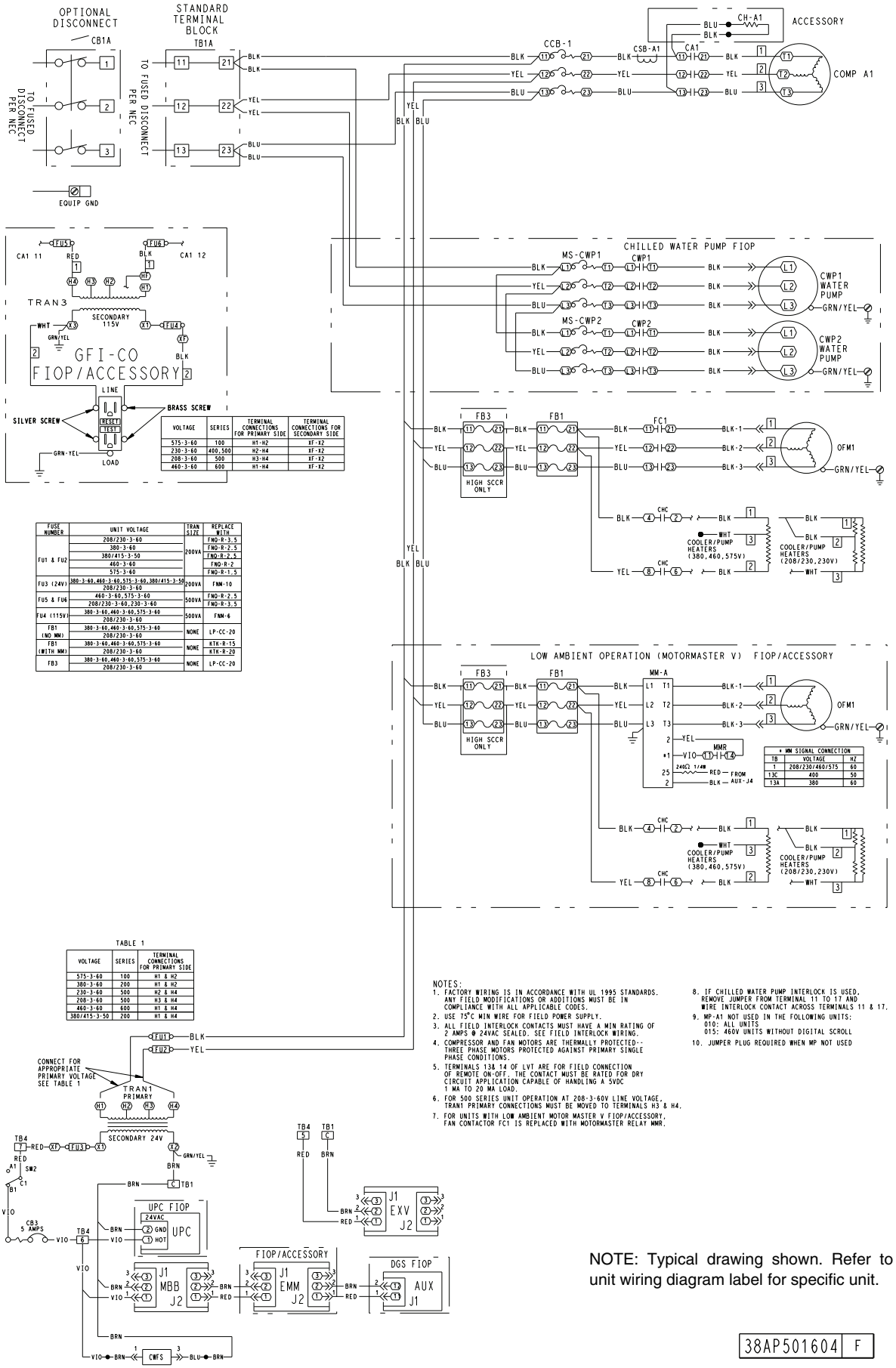

VOLTAGE	SERIES	TERMINAL CONNECTIONS FOR PRIMARY SIDE	TERMINAL CONNECTIONS FOR SECONDARY SIDE
575-3-60	100	H1-H2	XF-X2
230-3-60	400,500	H2-H4	XF-X2
208-3-60	500	H3-H4	XF-X2
460-3-60	600	H1-H4	XF-X2

FUSE NUMBER	UNIT VOLTAGE	TRAN SIZE	REPLACE WITH
FU1 & FU2	208/230-3-60	200VA	FNQ-R-3.5
	380-3-60		FNQ-R-2.5
	380/415-3-50		FNQ-R-2.5
	460-3-60		FNQ-R-2
	575-3-60		FNQ-R-1.5
FU3 (24V)	380-3-60,460-3-60,575-3-60,380/415-3-50	200VA	FNM-10
	208/230-3-60		
FU5 & FU6	460-3-60,575-3-60	500VA	FNQ-R-2.5
	208/230-3-60,230-3-60		FNQ-R-3.5
FU4 (115V)	380-3-60,460-3-60,575-3-60	500VA	FNM-6
	208/230-3-60		
FB1 (NO MM)	380-3-60,460-3-60,575-3-60	NONE	LP-CC-20
	208/230-3-60		
FB1 (WITH MM)	380-3-60,460-3-60,575-3-60	NONE	KTK-R-15
	208/230-3-60		KTK-R-20
FB3	380-3-60,460-3-60,575-3-60	NONE	LP-CC-20
	208/230-3-60		

TABLE 1

VOLTAGE	SERIES	TERMINAL CONNECTIONS FOR PRIMARY SIDE
575-3-60	100	H1 & H2
380-3-60	200	H1 & H2
230-3-60	500	H2 & H4
208-3-60	500	H3 & H4
460-3-60	600	H1 & H4
380/415-3-50	200	H1 & H4

NOTES:
1. FACTORY WIRING IS IN ACCORDANCE WITH UL 1995 STANDARDS. ANY FIELD MODIFICATIONS OR ADDITIONS MUST BE IN COMPLIANCE WITH ALL APPLICABLE CODES.
2. USE 75°C MIN WIRE FOR FIELD POWER SUPPLY.
3. ALL FIELD INTERLOCK CONTACTS MUST HAVE A MIN RATING OF 2 AMPS @ 24VAC SEALED. SEE FIELD INTERLOCK WIRING.
4. COMPRESSOR AND FAN MOTORS ARE THERMALLY PROTECTED-- THREE PHASE MOTORS PROTECTED AGAINST PRIMARY SINGLE PHASE CONDITIONS.
5. TERMINALS 13& 14 OF LVT ARE FOR FIELD CONNECTION OF REMOTE ON-OFF. THE CONTACT MUST BE RATED FOR DRY CIRCUIT APPLICATION CAPABLE OF HANDLING A 5VDC 1 MA TO 20 MA LOAD.
6. FOR 500 SERIES UNIT OPERATION AT 208-3-60V LINE VOLTAGE, TRAN1 PRIMARY CONNECTIONS MUST BE MOVED TO TERMINALS H3 & H4.
7. FOR UNITS WITH LOW AMBIENT MOTOR MASTER V FIOP/ACCESSORY, FAN CONTACTOR FC1 IS REPLACED WITH MOTORMASTER RELAY MMR.
8. IF CHILLED WATER PUMP INTERLOCK IS USED, REMOVE JUMPER FROM TERMINAL 11 TO 17 AND WIRE INTERLOCK CONTACT ACROSS TERMINALS 11 & 17.
9. MP-A1 NOT USED IN THE FOLLOWING UNITS:
   010: ALL UNITS
   015: 460V UNITS WITHOUT DIGITAL SCROLL
10. JUMPER PLUG REQUIRED WHEN MP NOT USED

* MM SIGNAL CONNECTION		
TB	VOLTAGE	HZ
1	208/230/460/575	60
13C	400	50
13A	380	60

NOTE: Typical drawing shown. Refer to unit wiring diagram label for specific unit.

Fig. 6 — Typical Wiring Schematic, 30RAP010,015 Units — Power Wiring

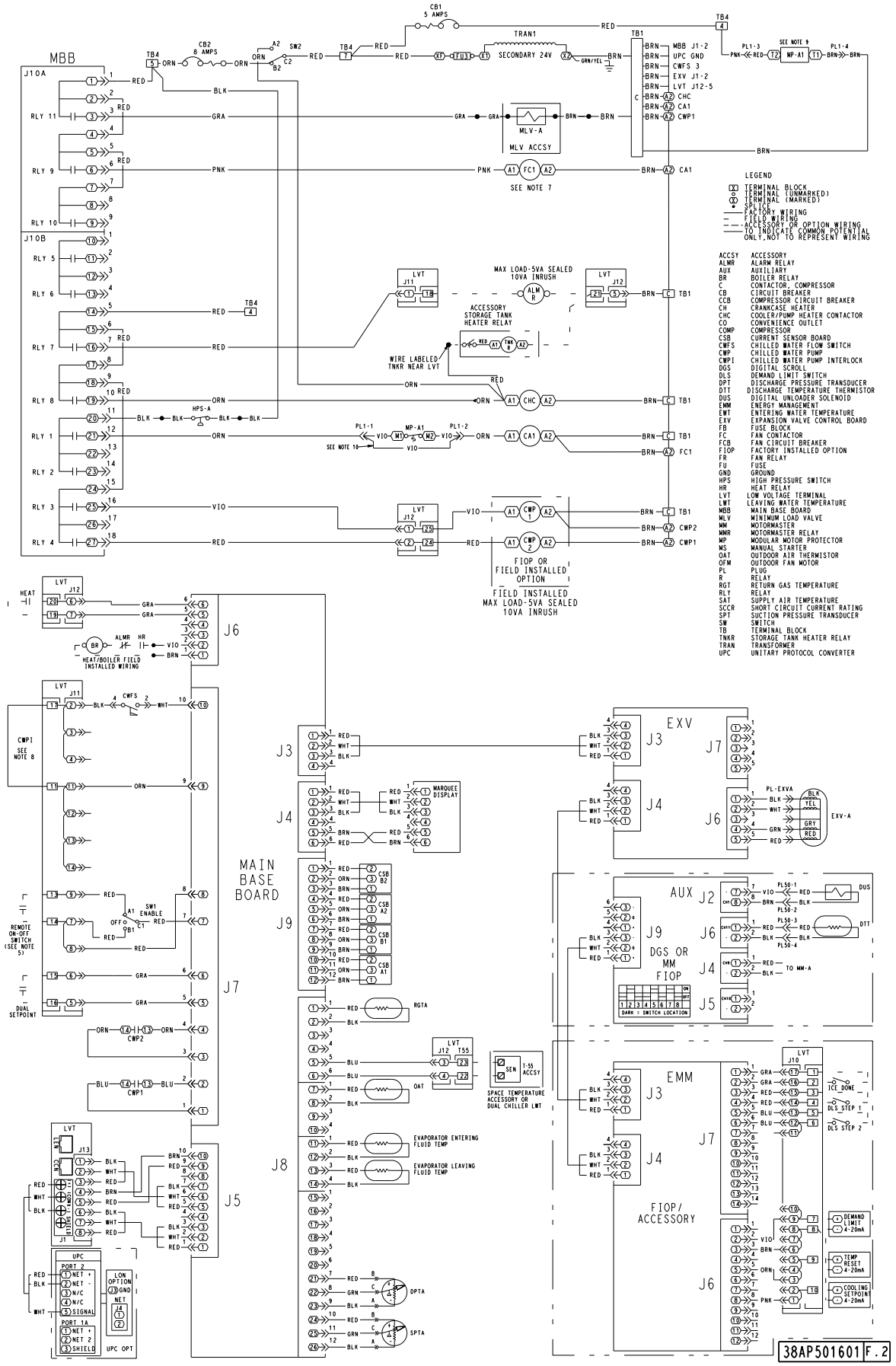

LEGEND

- TERMINAL BLOCK
- TERMINAL (UNMARKED)
- TERMINAL (MARKED)
- SPLICE
- FACTORY WIRING
- FIELD WIRING
- ACCESSORY OR OPTION WIRING
- TO INDICATE COMMON POTENTIAL ONLY, NOT TO REPRESENT WIRING

ACCSY	ACCESSORY
ALMR	ALARM RELAY
AUX	AUXILIARY
BR	BOILER RELAY
C	CONTACTOR, COMPRESSOR
CB	CIRCUIT BREAKER
CCB	COMPRESSOR CIRCUIT BREAKER
CH	CRANKCASE HEATER
CHC	COOLER/PUMP HEATER CONTACTOR
CO	CONVENIENCE OUTLET
COMP	COMPRESSOR
CSB	CURRENT SENSOR BOARD
CWFS	CHILLED WATER FLOW SWITCH
CWP	CHILLED WATER PUMP
CWPI	CHILLED WATER PUMP INTERLOCK
DGS	DIGITAL SCROLL
DLS	DEMAND LIMIT SWITCH
DPT	DISCHARGE PRESSURE TRANSDUCER
DTT	DISCHARGE TEMPERATURE THERMISTOR
DUS	DIGITAL UNLOADER SOLENOID
EMM	ENERGY MANAGEMENT
EWT	ENTERING WATER TEMPERATURE
EXV	EXPANSION VALVE CONTROL BOARD
FB	FUSE BLOCK
FC	FAN CONTACTOR
FCB	FAN CIRCUIT BREAKER
FIOP	FACTORY INSTALLED OPTION
FR	FAN RELAY
FU	FUSE
GND	GROUND
HPS	HIGH PRESSURE SWITCH
HR	HEAT RELAY
LVT	LOW VOLTAGE TERMINAL
LWT	LEAVING WATER TEMPERATURE
MBB	MAIN BASE BOARD
MLV	MINIMUM LOAD VALVE
MM	MOTORMASTER
MMR	MOTORMASTER RELAY
MP	MODULAR MOTOR PROTECTOR
MS	MANUAL STARTER
OAT	OUTDOOR AIR THERMISTOR
OFM	OUTDOOR FAN MOTOR
PL	PLUG
R	RELAY
RGT	RETURN GAS TEMPERATURE
RLY	RELAY
SAT	SUPPLY AIR TEMPERATURE
SCCR	SHORT CIRCUIT CURRENT RATING
SPT	SUCTION PRESSURE TRANSDUCER
SW	SWITCH
TB	TERMINAL BLOCK
TNKR	STORAGE TANK HEATER RELAY
TRAN	TRANSFORMER
UPC	UNITARY PROTOCOL CONVERTER

NOTE: Typical drawing shown. Refer to unit wiring diagram label for specific unit.

Fig. 7 — Typical Wiring Schematic, 30RAP010,015 Units — Control Wiring

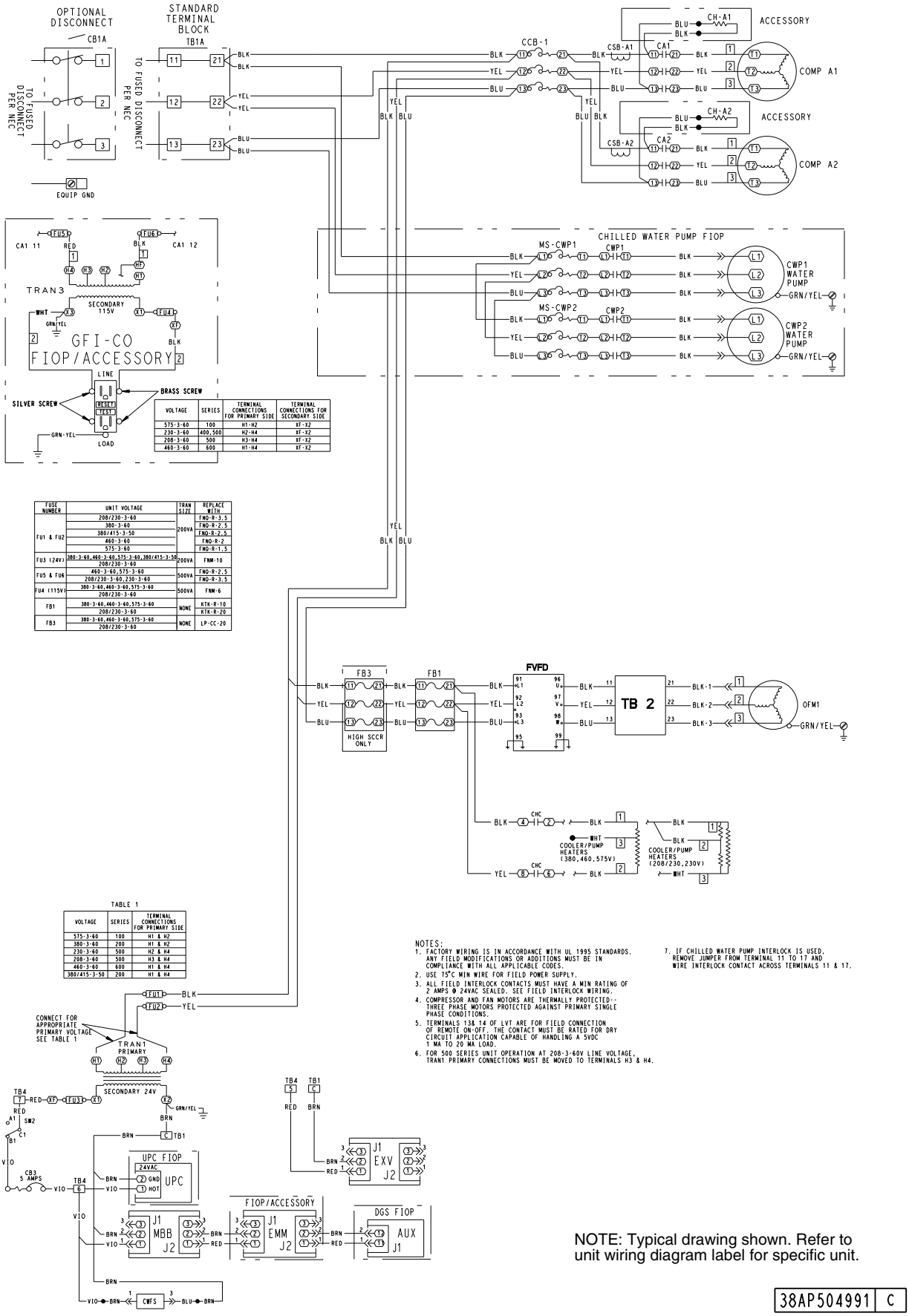

VOLTAGE	SERIES	TERMINAL CONNECTIONS FOR PRIMARY SIDE	TERMINAL CONNECTIONS FOR SECONDARY SIDE
575-3-60	100	H1-H2	XF-X2
230-3-60	400,500	H2-H4	XF-X2
208-3-60	500	H3-H4	XF-X2
460-3-60	600	H1-H4	XF-X2

FUSE NUMBER	UNIT VOLTAGE	TRAN SIZE	REPLACE WITH
FU1 & FU2	208/230-3-60	200VA	FNQ-R-3.5
	380-3-60		FNQ-R-2.5
	380/415-3-50		FNQ-R-2.5
	460-3-60		FNQ-R-2
	575-3-60		FNQ-R-1.5
FU3 (24V)	380-3-60,460-3-60,575-3-60,380/415-3-50 208/230-3-60	200VA	FNM-10
FU5 & FU6	460-3-60,575-3-60	500VA	FNQ-R-2.5
	208/230-3-60,230-3-60		FNQ-R-3.5
FU4 (115V)	380-3-60,460-3-60,575-3-60 208/230-3-60	500VA	FNM-6
FB1	380-3-60,460-3-60,575-3-60	NONE	KTK-R-10
	208/230-3-60		KTK-R-20
FB3	380-3-60,460-3-60,575-3-60 208/230-3-60	NONE	LP-CC-20

TABLE 1

VOLTAGE	SERIES	TERMINAL CONNECTIONS FOR PRIMARY SIDE
575-3-60	100	H1 & H2
380-3-60	200	H1 & H2
230-3-60	500	H2 & H4
208-3-60	500	H3 & H4
460-3-60	600	H1 & H4
380/415-3-50	200	H1 & H4

NOTES:
1. FACTORY WIRING IS IN ACCORDANCE WITH UL 1995 STANDARDS. ANY FIELD MODIFICATIONS OR ADDITIONS MUST BE IN COMPLIANCE WITH ALL APPLICABLE CODES.
2. USE 75°C MIN WIRE FOR FIELD POWER SUPPLY.
3. ALL FIELD INTERLOCK CONTACTS MUST HAVE A MIN RATING OF 2 AMPS @ 24VAC SEALED. SEE FIELD INTERLOCK WIRING.
4. COMPRESSOR AND FAN MOTORS ARE THERMALLY PROTECTED--THREE PHASE MOTORS PROTECTED AGAINST PRIMARY SINGLE PHASE CONDITIONS.
5. TERMINALS 13& 14 OF LVT ARE FOR FIELD CONNECTION OF REMOTE ON-OFF. THE CONTACT MUST BE RATED FOR DRY CIRCUIT APPLICATION CAPABLE OF HANDLING A 5VDC 1 MA TO 20 MA LOAD.
6. FOR 500 SERIES UNIT OPERATION AT 208-3-60V LINE VOLTAGE, TRAN1 PRIMARY CONNECTIONS MUST BE MOVED TO TERMINALS H3 & H4.
7. IF CHILLED WATER PUMP INTERLOCK IS USED, REMOVE JUMPER FROM TERMINAL 11 TO 17 AND WIRE INTERLOCK CONTACT ACROSS TERMINALS 11 & 17.

NOTE: Typical drawing shown. Refer to unit wiring diagram label for specific unit.

38AP504991 C

Fig. 8 — Typical Wiring Schematic, 30RAP011,016 Units — Power Wiring

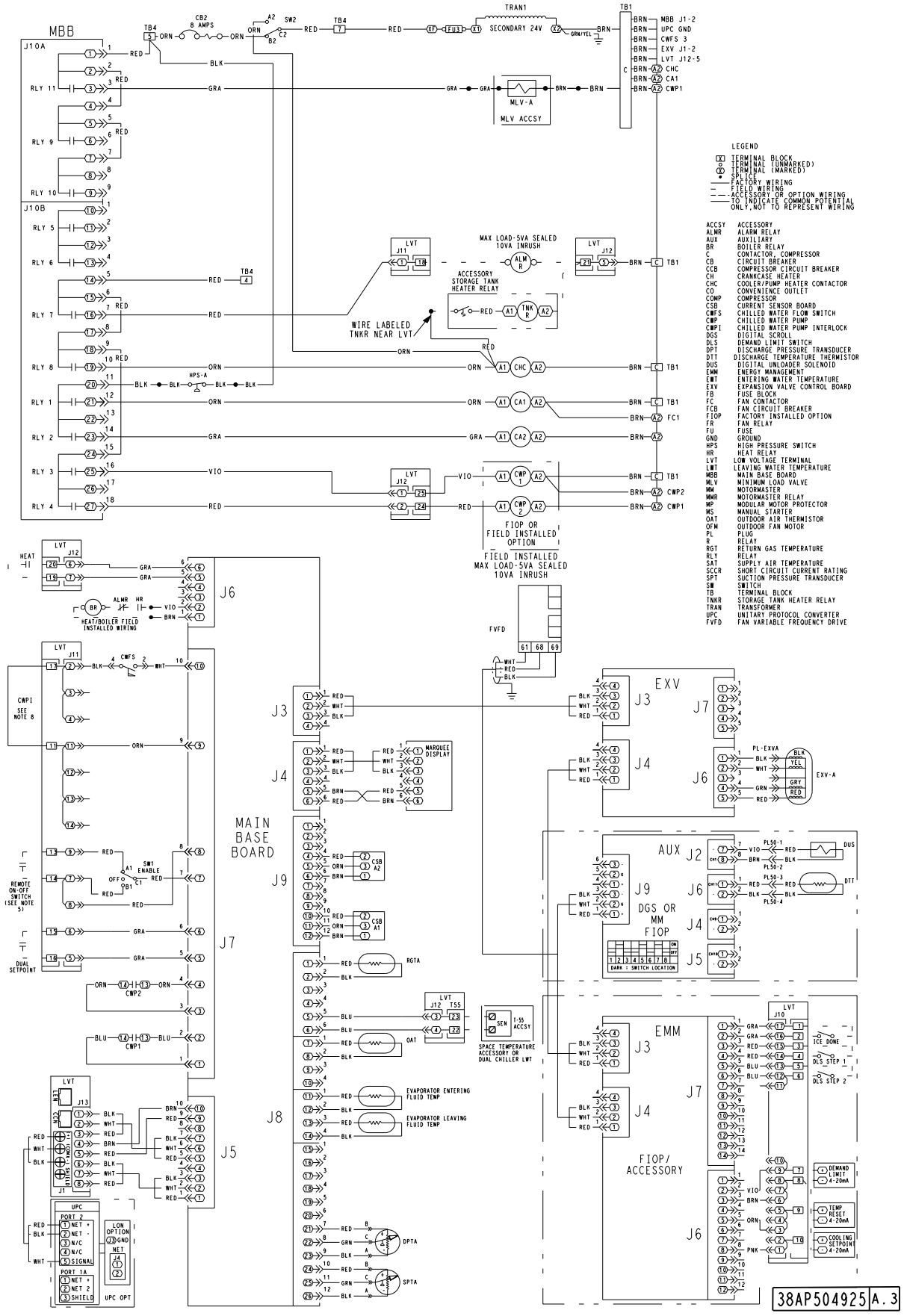

NOTE: Typical drawing shown. Refer to unit wiring diagram label for specific unit.

Fig. 9 — Typical Wiring Schematic, 30RAP011,016 Units — Control Wiring

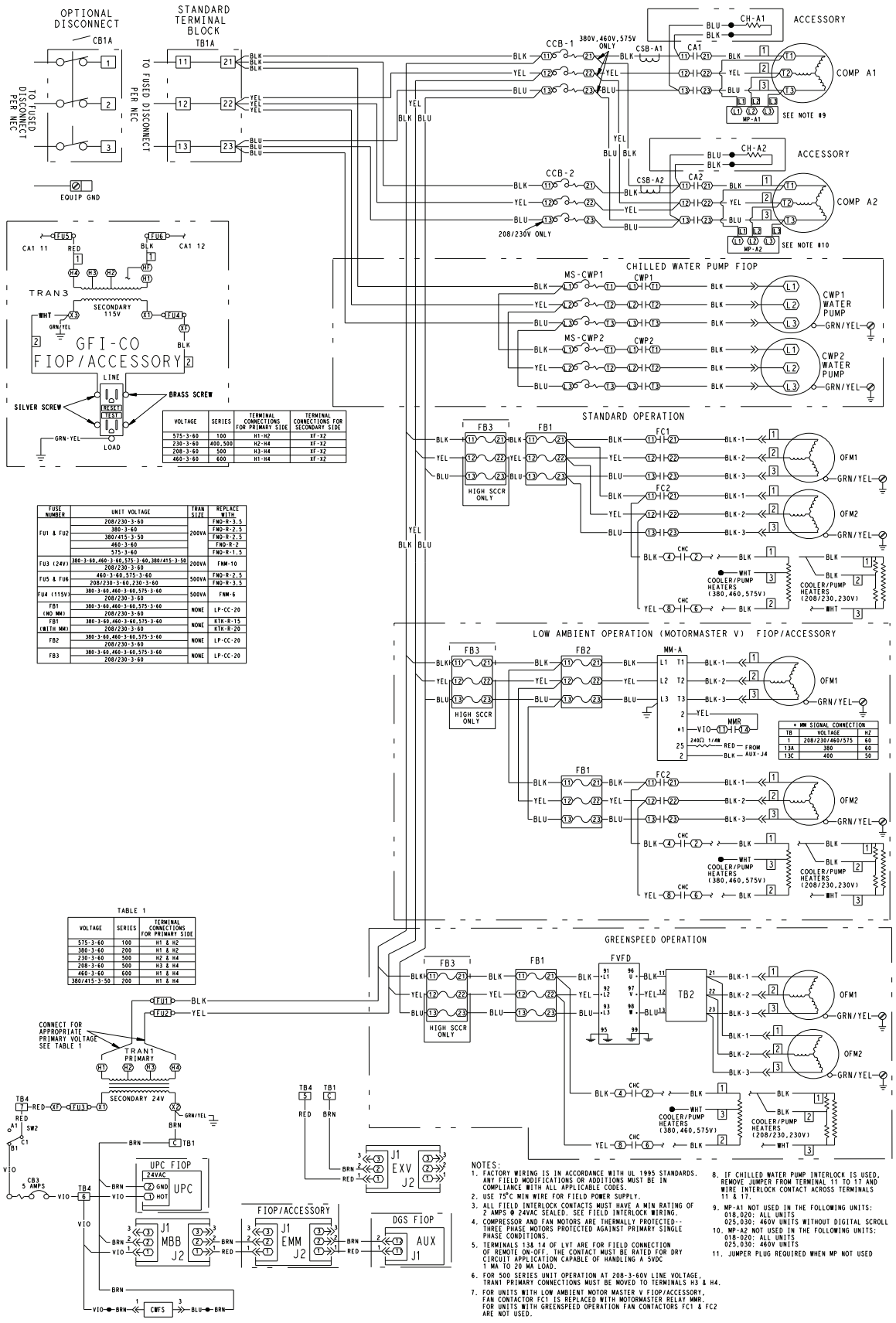

VOLTAGE	SERIES	TERMINAL CONNECTIONS FOR PRIMARY SIDE	TERMINAL CONNECTIONS FOR SECONDARY SIDE
575-3-60	100	H1-H2	XF-X2
230-3-60	400,500	H2-H4	XF-X2
208-3-60	500	H3-H4	XF-X2
460-3-60	600	H1-H4	XF-X2

FUSE NUMBER	UNIT VOLTAGE	TRAN SIZE	REPLACE WITH
FU1 & FU2	208/230-3-60	200VA	FNQ-R-3.5
	380-3-60		FNQ-R-2.5
	380/415-3-50		FNQ-R-2.5
	460-3-60		FNQ-R-2
	575-3-60		FNQ-R-1.5
FU3 (24V)	380-3-60,460-3-60,575-3-60,380/415-3-50 208/230-3-60	200VA	FNM-10
FU5 & FU6	460-3-60,575-3-60	500VA	FNQ-R-2.5
	208/230-3-60,230-3-60		FNQ-R-3.5
FU4 (115V)	380-3-60,460-3-60,575-3-60	500VA	FNM-6
	208/230-3-60		
FB1 (NO MM)	380-3-60,460-3-60,575-3-60	NONE	LP-CC-20
	208/230-3-60		
FB1 (WITH MM)	380-3-60,460-3-60,575-3-60	NONE	KTK-R-15
	208/230-3-60		KTK-R-20
FB2	380-3-60,460-3-60,575-3-60	NONE	LP-CC-20
	208/230-3-60		
FB3	380-3-60,460-3-60,575-3-60	NONE	LP-CC-20
	208/230-3-60		

* MM SIGNAL CONNECTION		
TB	VOLTAGE	HZ
1	208/230/460/575	60
13A	380	60
13C	400	50

TABLE 1

VOLTAGE	SERIES	TERMINAL CONNECTIONS FOR PRIMARY SIDE
575-3-60	100	H1 & H2
380-3-60	200	H1 & H2
230-3-60	500	H2 & H4
208-3-60	500	H3 & H4
460-3-60	600	H1 & H4
380/415-3-50	200	H1 & H4

NOTE: Typical drawing shown. Refer to unit wiring diagram label for specific unit.

Fig. 10 — Typical Wiring Schematic, 30RAP018-030 Units — Power Wiring

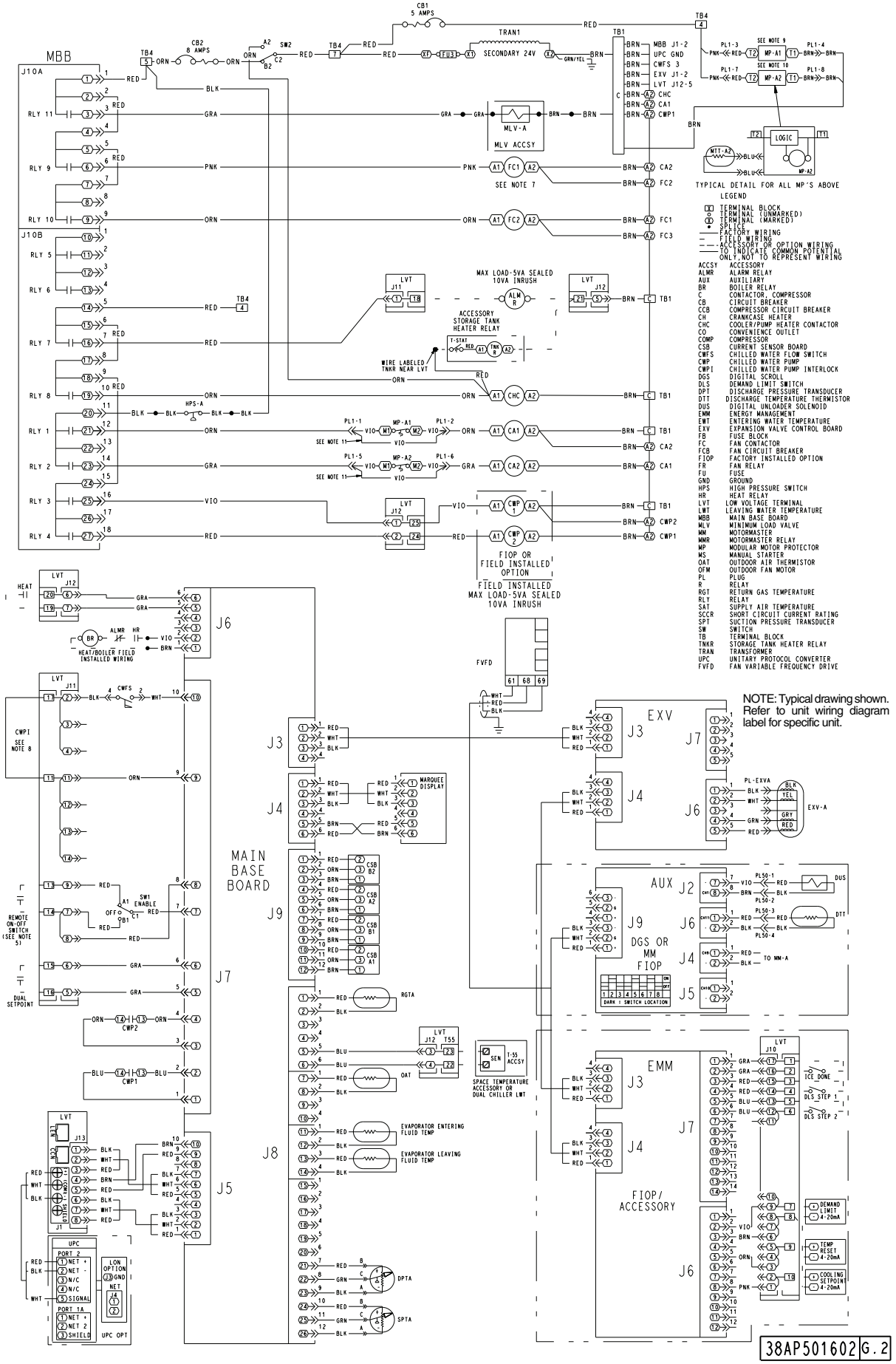

Fig. 11 — Typical Wiring Schematic, 30RAP018-030 Units — Control Wiring

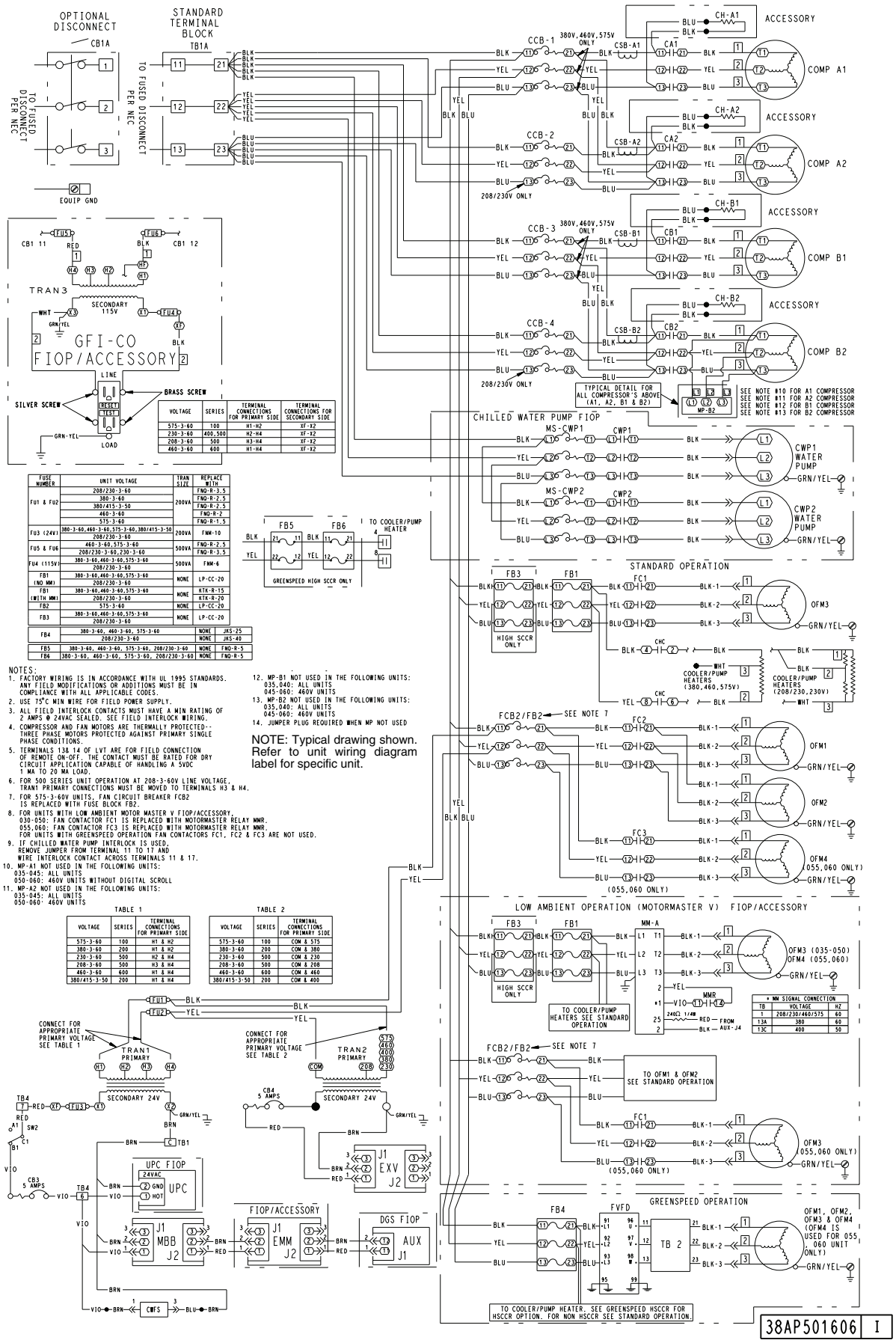

FUSE NUMBER	UNIT VOLTAGE	TRAN SIZE	REPLACE WITH
FU1 & FU2	208/230-3-60	200VA	FNQ-R-3.5
	380-3-60		FNQ-R-2.5
	380/415-3-50		FNQ-R-2.5
	460-3-60		FNQ-R-2
	575-3-60		FNQ-R-1.5
FU3 (24V)	380-3-60,460-3-60,575-3-60,380/415-3-50	200VA	FNM-10
	208/230-3-60		
FU5 & FU6	460-3-60,575-3-60	500VA	FNQ-R-2.5
	208/230-3-60,230-3-60		FNQ-R-3.5
FU4 (115V)	380-3-60,460-3-60,575-3-60	500VA	FNM-6
	208/230-3-60		
FB1 (NO MM)	380-3-60,460-3-60,575-3-60	NONE	LP-CC-20
	208/230-3-60		
FB1 (WITH MM)	380-3-60,460-3-60,575-3-60	NONE	KTK-R-15
	208/230-3-60		KTK-R-20
FB2	575-3-60	NONE	LP-CC-20
FB3	380-3-60,460-3-60,575-3-60	NONE	LP-CC-20
	208/230-3-60		
FB4	380-3-60, 460-3-60, 575-3-60	NONE	JKS-25
	208/230-3-60	NONE	JKS-40
FB5	380-3-60, 460-3-60, 575-3-60, 208/230-3-60	NONE	FNQ-R-5
FB6	380-3-60, 460-3-60, 575-3-60, 208/230-3-60	NONE	FNQ-R-5

NOTES:
1. FACTORY WIRING IS IN ACCORDANCE WITH UL 1995 STANDARDS. ANY FIELD MODIFICATIONS OR ADDITIONS MUST BE IN COMPLIANCE WITH ALL APPLICABLE CODES.
2. USE 75°C MIN WIRE FOR FIELD POWER SUPPLY.
3. ALL FIELD INTERLOCK CONTACTS MUST HAVE A MIN RATING OF 2 AMPS @ 24VAC SEALED. SEE FIELD INTERLOCK WIRING.
4. COMPRESSOR AND FAN MOTORS ARE THERMALLY PROTECTED-- THREE PHASE MOTORS PROTECTED AGAINST PRIMARY SINGLE PHASE CONDITIONS.
5. TERMINALS 13& 14 OF LVT ARE FOR FIELD CONNECTION OF REMOTE ON-OFF. THE CONTACT MUST BE RATED FOR DRY CIRCUIT APPLICATION CAPABLE OF HANDLING A 5VDC 1 MA TO 20 MA LOAD.
6. FOR 500 SERIES UNIT OPERATION AT 208-3-60V LINE VOLTAGE, TRAN1 PRIMARY CONNECTIONS MUST BE MOVED TO TERMINALS H3 & H4.
7. FOR 575-3-60V UNITS, FAN CIRCUIT BREAKER FCB2 IS REPLACED WITH FUSE BLOCK FB2.
8. FOR UNITS WITH LOW AMBIENT MOTOR MASTER V FIOP/ACCESSORY, 030-050: FAN CONTACTOR FC1 IS REPLACED WITH MOTORMASTER RELAY MMR. 055,060: FAN CONTACTOR FC3 IS REPLACED WITH MOTORMASTER RELAY MMR. FOR UNITS WITH GREENSPEED OPERATION FAN CONTACTORS FC1, FC2 & FC3 ARE NOT USED.
9. IF CHILLED WATER PUMP INTERLOCK IS USED, REMOVE JUMPER FROM TERMINAL 11 TO 17 AND WIRE INTERLOCK CONTACT ACROSS TERMINALS 11 & 17.
10. MP-A1 NOT USED IN THE FOLLOWING UNITS: 035-045: ALL UNITS 050-060: 460V UNITS WITHOUT DIGITAL SCROLL
11. MP-A2 NOT USED IN THE FOLLOWING UNITS: 035-045: ALL UNITS 050-060: 460V UNITS
12. MP-B1 NOT USED IN THE FOLLOWING UNITS: 035,040: ALL UNITS 045-060: 460V UNITS
13. MP-B2 NOT USED IN THE FOLLOWING UNITS: 035,040: ALL UNITS 045-060: 460V UNITS
14. JUMPER PLUG REQUIRED WHEN MP NOT USED

NOTE: Typical drawing shown. Refer to unit wiring diagram label for specific unit.

TABLE 1

VOLTAGE	SERIES	TERMINAL CONNECTIONS FOR PRIMARY SIDE
575-3-60	100	H1 & H2
380-3-60	200	H1 & H2
230-3-60	500	H2 & H4
208-3-60	500	H3 & H4
460-3-60	600	H1 & H4
380/415-3-50	200	H1 & H4

TABLE 2

VOLTAGE	SERIES	TERMINAL CONNECTIONS FOR PRIMARY SIDE
575-3-60	100	COM & 575
380-3-60	200	COM & 380
230-3-60	500	COM & 230
208-3-60	500	COM & 208
460-3-60	600	COM & 460
380/415-3-50	200	COM & 400

VOLTAGE	SERIES	TERMINAL CONNECTIONS FOR PRIMARY SIDE
575-3-60	100	H1 & H2
380-3-60	200	H1 & H2
230-3-60	500	H2 & H4
208-3-60	500	H3 & H4
460-3-60	600	H1 & H4
380/415-3-50	200	H1 & H4

TB	VOLTAGE	HZ
1	208/230/460/575	60
13A	380	60
13C	400	50

Fig. 12 — Typical Wiring Schematic, 30RAP035-060 Units — Power Wiring

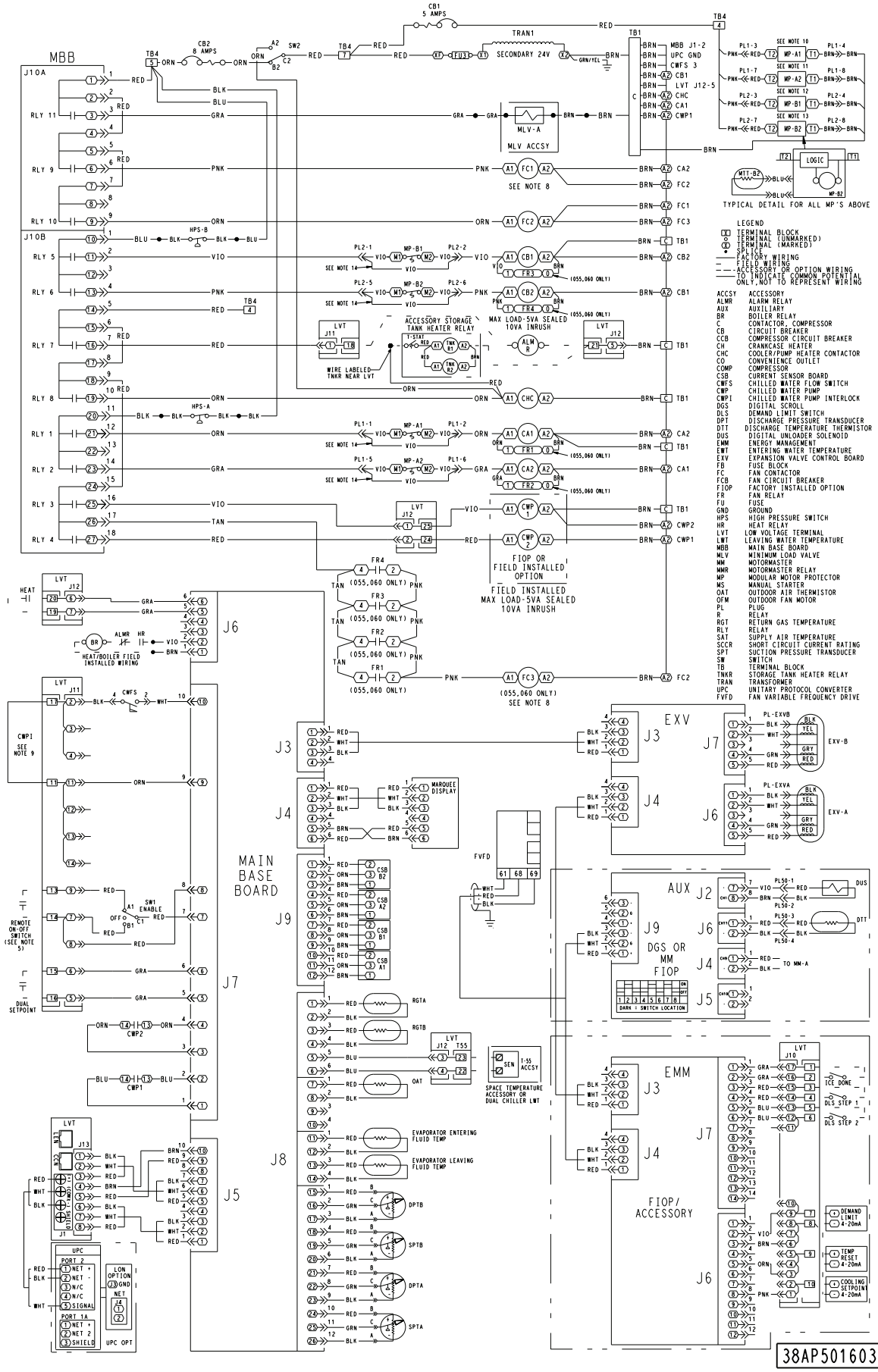

NOTE: Typical drawing shown. Refer to unit wiring diagram label for specific unit.

Fig. 13 — Typical Wiring Schematic, 30RAP035-060 Units — Control Wiring

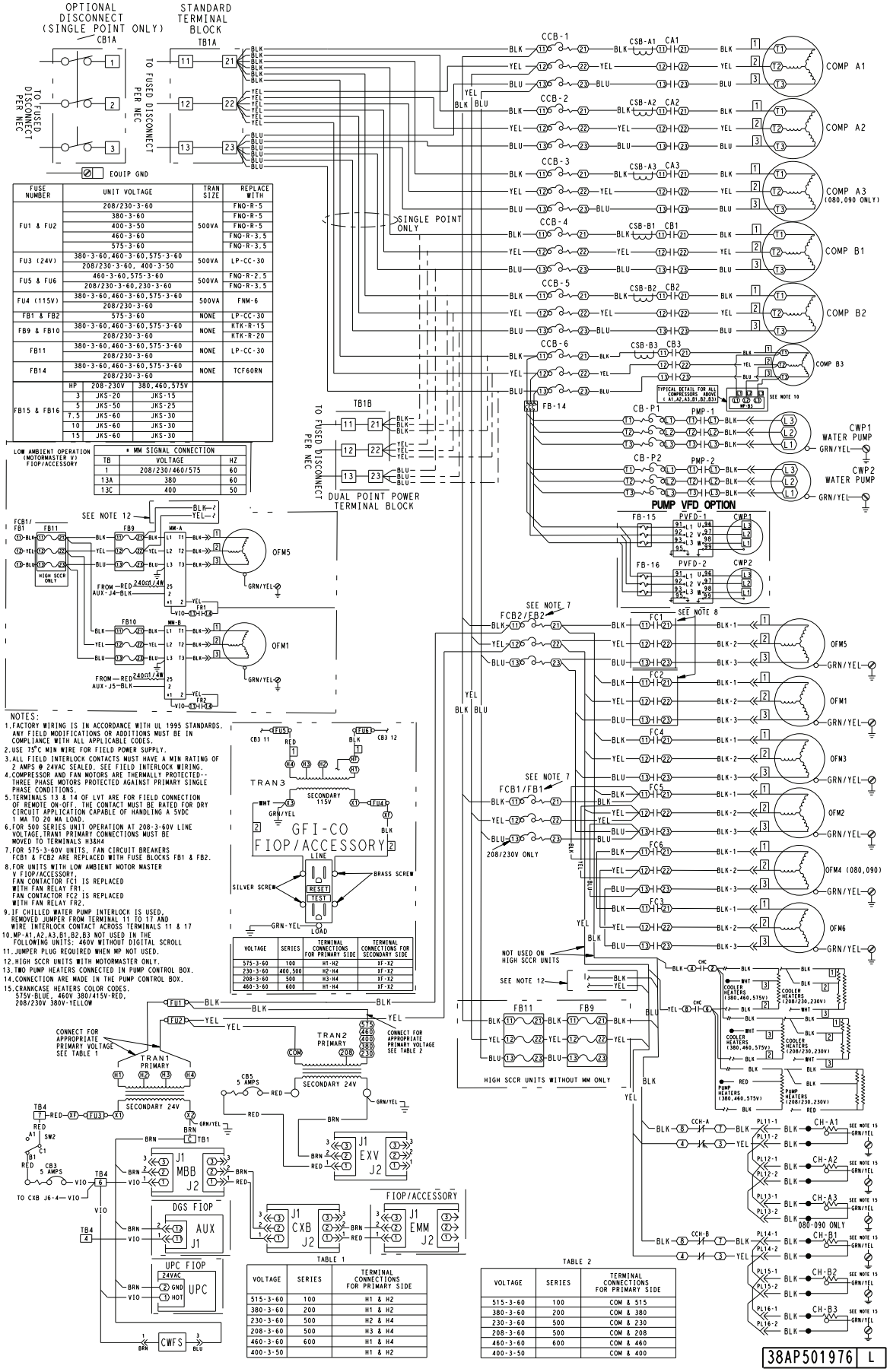

FUSE NUMBER	UNIT VOLTAGE	TRAN SIZE	REPLACE WITH
FU1 & FU2	208/230-3-60	500VA	FNQ-R-5
	380-3-60		FNQ-R-5
	400-3-50		FNQ-R-5
	460-3-60		FNQ-R-3.5
	575-3-60		FNQ-R-3.5
FU3 (24V)	380-3-60,460-3-60,575-3-60	500VA	LP-CC-30
	208/230-3-60, 400-3-50		
FU5 & FU6	460-3-60,575-3-60	500VA	FNQ-R-2.5
	208/230-3-60,230-3-60		FNQ-R-3.5
FU4 (115V)	380-3-60,460-3-60,575-3-60	500VA	FNM-6
	208/230-3-60		
FB1 & FB2	575-3-60	NONE	LP-CC-30
FB9 & FB10	380-3-60,460-3-60,575-3-60	NONE	KTK-R-15
	208/230-3-60		KTK-R-20
FB11	380-3-60,460-3-60,575-3-60	NONE	LP-CC-30
	208/230-3-60		
FB14	380-3-60,460-3-60,575-3-60	NONE	TCF60RN
	208/230-3-60		

FB15 & FB16	HP	208-230V	380,460,575V
	3	JKS-20	JKS-15
	5	JKS-50	JKS-25
	7.5	JKS-60	JKS-30
	10	JKS-60	JKS-30
	15	JKS-60	JKS-30

LOW AMBIENT OPERATION (MOTORMASTER V) FIOP/ACCESSORY	* MM SIGNAL CONNECTION	
TB	VOLTAGE	HZ
1	208/230/460/575	60
13A	380	60
13C	400	50

NOTES:
1. FACTORY WIRING IS IN ACCORDANCE WITH UL 1995 STANDARDS. ANY FIELD MODIFICATIONS OR ADDITIONS MUST BE IN COMPLIANCE WITH ALL APPLICABLE CODES.
2. USE 75°C MIN WIRE FOR FIELD POWER SUPPLY.
3. ALL FIELD INTERLOCK CONTACTS MUST HAVE A MIN RATING OF 2 AMPS @ 24VAC SEALED. SEE FIELD INTERLOCK WIRING.
4. COMPRESSOR AND FAN MOTORS ARE THERMALLY PROTECTED-- THREE PHASE MOTORS PROTECTED AGAINST PRIMARY SINGLE PHASE CONDITIONS.
5. TERMINALS 13 & 14 OF LVT ARE FOR FIELD CONNECTION OF REMOTE ON-OFF. THE CONTACT MUST BE RATED FOR DRY CIRCUIT APPLICATION CAPABLE OF HANDLING A 5VDC 1 MA TO 20 MA LOAD.
6. FOR 500 SERIES UNIT OPERATION AT 208-3-60V LINE VOLTAGE, TRAN1 PRIMARY CONNECTIONS MUST BE MOVED TO TERMINALS H3&H4
7. FOR 575-3-60V UNITS, FAN CIRCUIT BREAKERS FCB1 & FCB2 ARE REPLACED WITH FUSE BLOCKS FB1 & FB2.
8. FOR UNITS WITH LOW AMBIENT MOTOR MASTER V FIOP/ACCESSORY, FAN CONTACTOR FC1 IS REPLACED WITH FAN RELAY FR1, FAN CONTACTOR FC2 IS REPLACED WITH FAN RELAY FR2.
9. IF CHILLED WATER PUMP INTERLOCK IS USED, REMOVED JUMPER FROM TERMINAL 11 TO 17 AND WIRE INTERLOCK CONTACT ACROSS TERMINALS 11 & 17
10. MP-A1,A2,A3,B1,B2,B3 NOT USED IN THE FOLLOWING UNITS: 460V WITHOUT DIGITAL SCROLL
11. JUMPER PLUG REQUIRED WHEN MP NOT USED.
12. HIGH SCCR UNITS WITH MOTORMASTER ONLY.
13. TWO PUMP HEATERS CONNECTED IN PUMP CONTROL BOX.
14. CONNECTION ARE MADE IN THE PUMP CONTROL BOX.
15. CRANKCASE HEATERS COLOR CODES. 575V-BLUE, 460V 380/415V-RED, 208/230V 380V-YELLOW

VOLTAGE	SERIES	TERMINAL CONNECTIONS FOR PRIMARY SIDE	TERMINAL CONNECTIONS FOR SECONDARY SIDE
575-3-60	100	H1-H2	X1-X2
230-3-60	400,500	H2-H4	X1-X2
208-3-60	500	H3-H4	X1-X2
460-3-60	600	H1-H4	X1-X2

TABLE 1

VOLTAGE	SERIES	TERMINAL CONNECTIONS FOR PRIMARY SIDE
515-3-60	100	H1 & H2
380-3-60	200	H1 & H2
230-3-60	500	H2 & H4
208-3-60	500	H3 & H4
460-3-60	600	H1 & H4
400-3-50		H1 & H2

TABLE 2

VOLTAGE	SERIES	TERMINAL CONNECTIONS FOR PRIMARY SIDE
515-3-60	100	COM & 515
380-3-60	200	COM & 380
230-3-60	500	COM & 230
208-3-60	500	COM & 208
460-3-60	600	COM & 460
400-3-50		COM & 400

NOTE: Typical drawing shown. Refer to unit wiring diagram label for specific unit.

Fig. 14 — Typical Wiring Schematic, 30RAP070-090 Units — Power Wiring

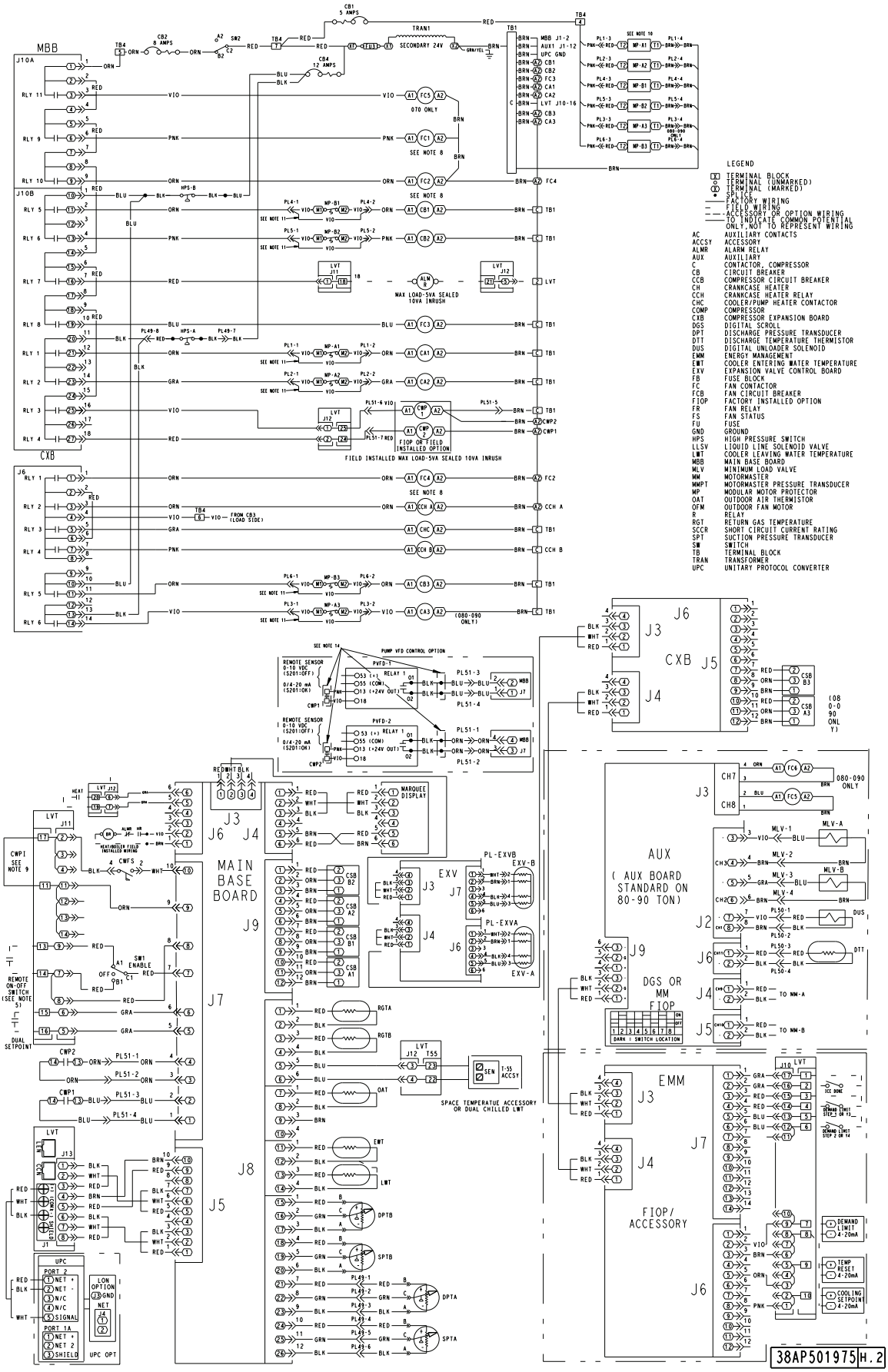

NOTE: Typical drawing shown. Refer to unit wiring diagram label for specific unit.

Fig. 15 — Typical Wiring Schematic, 30RAP070-090 Units — Control Wiring

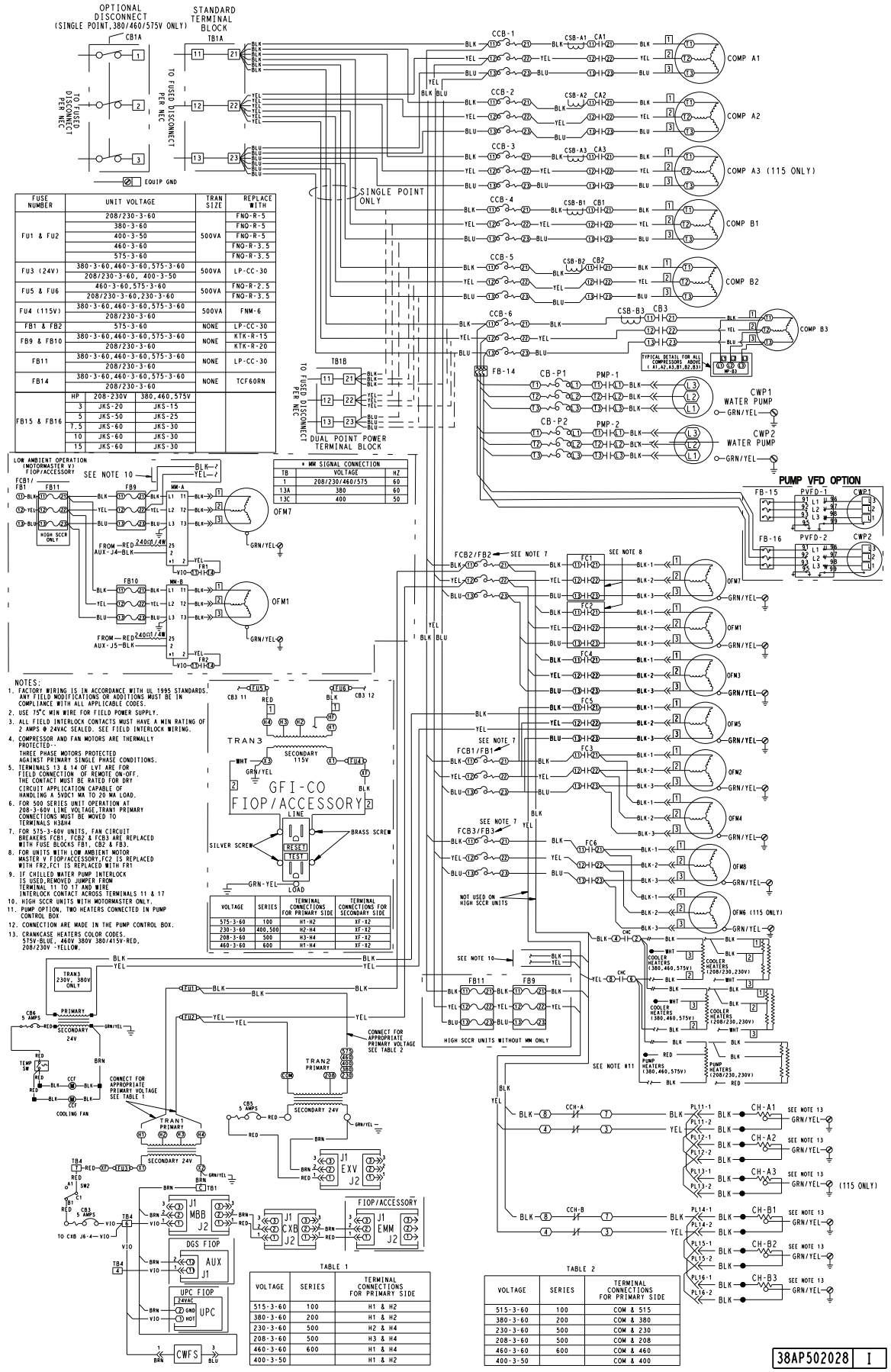

FUSE NUMBER	UNIT VOLTAGE	TRAN SIZE	REPLACE WITH
FU1 & FU2	208/230-3-60	500VA	FNQ-R-5
	380-3-60		FNQ-R-5
	400-3-50		FNQ-R-5
	460-3-60		FNQ-R-3.5
	575-3-60		FNQ-R-3.5
FU3 (24V)	380-3-60,460-3-60,575-3-60	500VA	LP-CC-30
	208/230-3-60, 400-3-50		
FU5 & FU6	460-3-60,575-3-60	500VA	FNQ-R-2.5
	208/230-3-60,230-3-60		FNQ-R-3.5
FU4 (115V)	380-3-60,460-3-60,575-3-60	500VA	FNM-6
	208/230-3-60		
FB1 & FB2	575-3-60	NONE	LP-CC-30
FB9 & FB10	380-3-60,460-3-60,575-3-60	NONE	KTK-R-15
	208/230-3-60		KTK-R-20
FB11	380-3-60,460-3-60,575-3-60	NONE	LP-CC-30
	208/230-3-60		
FB14	380-3-60,460-3-60,575-3-60	NONE	TCF60RN
	208/230-3-60		

FB15 & FB16	HP	208-230V	380,460,575V
	3	JKS-20	JKS-15
	5	JKS-50	JKS-25
	7.5	JKS-60	JKS-30
	10	JKS-60	JKS-30
	15	JKS-60	JKS-30

* MM SIGNAL CONNECTION		
TB	VOLTAGE	HZ
1	208/230/460/575	60
13A	380	60
13C	400	50

NOTES:

1. FACTORY WIRING IS IN ACCORDANCE WITH UL 1995 STANDARDS. ANY FIELD MODIFICATIONS OR ADDITIONS MUST BE IN COMPLIANCE WITH ALL APPLICABLE CODES.
2. USE 75°C MIN WIRE FOR FIELD POWER SUPPLY.
3. ALL FIELD INTERLOCK CONTACTS MUST HAVE A MIN RATING OF 2 AMPS @ 24VAC SEALED. SEE FIELD INTERLOCK WIRING.
4. COMPRESSOR AND FAN MOTORS ARE THERMALLY PROTECTED--
   THREE PHASE MOTORS PROTECTED AGAINST PRIMARY SINGLE PHASE CONDITIONS.
5. TERMINALS 13 & 14 OF LVT ARE FOR FIELD CONNECTION OF REMOTE ON-OFF. THE CONTACT MUST BE RATED FOR DRY CIRCUIT APPLICATION CAPABLE OF HANDLING A 5VDC1 MA TO 20 MA LOAD.
6. FOR 500 SERIES UNIT OPERATION AT 208-3-60V LINE VOLTAGE,TRAN1 PRIMARY CONNECTIONS MUST BE MOVED TO TERMINALS H3&H4
7. FOR 575-3-60V UNITS, FAN CIRCUIT BREAKERS FCB1, FCB2 & FCB3 ARE REPLACED WITH FUSE BLOCKS FB1, CB2 & FB3.
8. FOR UNITS WITH LOW AMBIENT MOTOR MASTER V FIOP/ACCESSORY,FC2 IS REPLACED WITH FR2,FC1 IS REPLACED WITH FR1
9. IF CHILLED WATER PUMP INTERLOCK IS USED,REMOVED JUMPER FROM TERMINAL 11 TO 17 AND WIRE INTERLOCK CONTACT ACROSS TERMINALS 11 & 17
10. HIGH SCCR UNITS WITH MOTORMASTER ONLY.
11. PUMP OPTION. TWO HEATERS CONNECTED IN PUMP CONTROL BOX.
12. CONNECTION ARE MADE IN THE PUMP CONTROL BOX.
13. CRANKCASE HEATERS COLOR CODES. 575V-BLUE, 460V 380V 380/415V-RED, 208/230V -YELLOW.

VOLTAGE	SERIES	TERMINAL CONNECTIONS FOR PRIMARY SIDE	TERMINAL CONNECTIONS FOR SECONDARY SIDE
575-3-60	100	H1-H2	XF-X2
230-3-60	400,500	H2-H4	XF-X2
208-3-60	500	H3-H4	XF-X2
460-3-60	600	H1-H4	XF-X2

TABLE 1

VOLTAGE	SERIES	TERMINAL CONNECTIONS FOR PRIMARY SIDE
515-3-60	100	H1 & H2
380-3-60	200	H1 & H2
230-3-60	500	H2 & H4
208-3-60	500	H3 & H4
460-3-60	600	H1 & H4
400-3-50		H1 & H2

TABLE 2

VOLTAGE	SERIES	TERMINAL CONNECTIONS FOR PRIMARY SIDE
515-3-60	100	COM & 515
380-3-60	200	COM & 380
230-3-60	500	COM & 230
208-3-60	500	COM & 208
460-3-60	600	COM & 460
400-3-50		COM & 400

NOTE: Typical drawing shown. Refer to unit wiring diagram label for specific unit.

Fig. 16 — Typical Wiring Schematic, 30RAP100,115 Units — Power Wiring

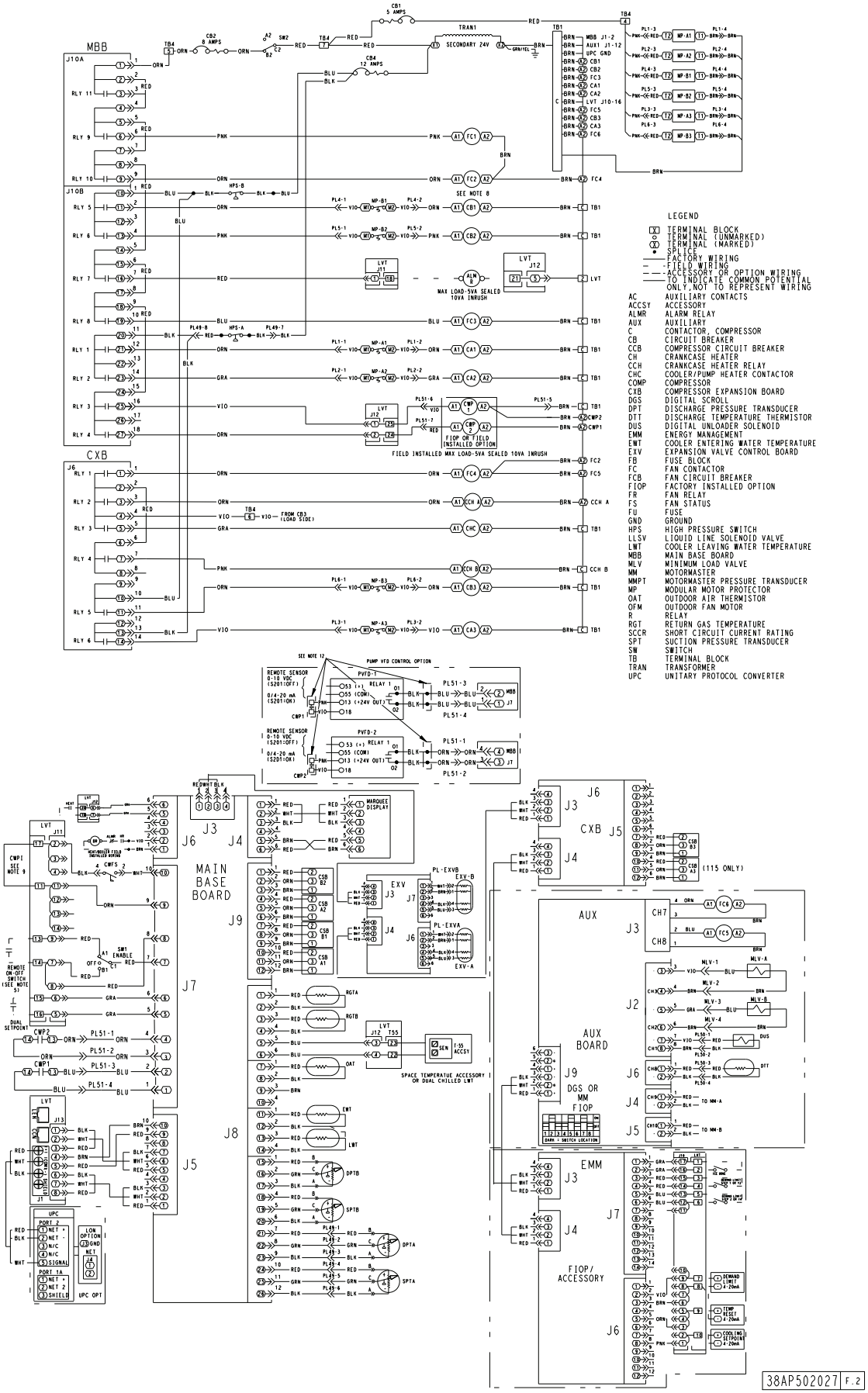

NOTE: Typical drawing shown. Refer to unit wiring diagram label for specific unit.

Fig. 17 — Typical Wiring Schematic, 30RAP100,115 Units — Control Wiring

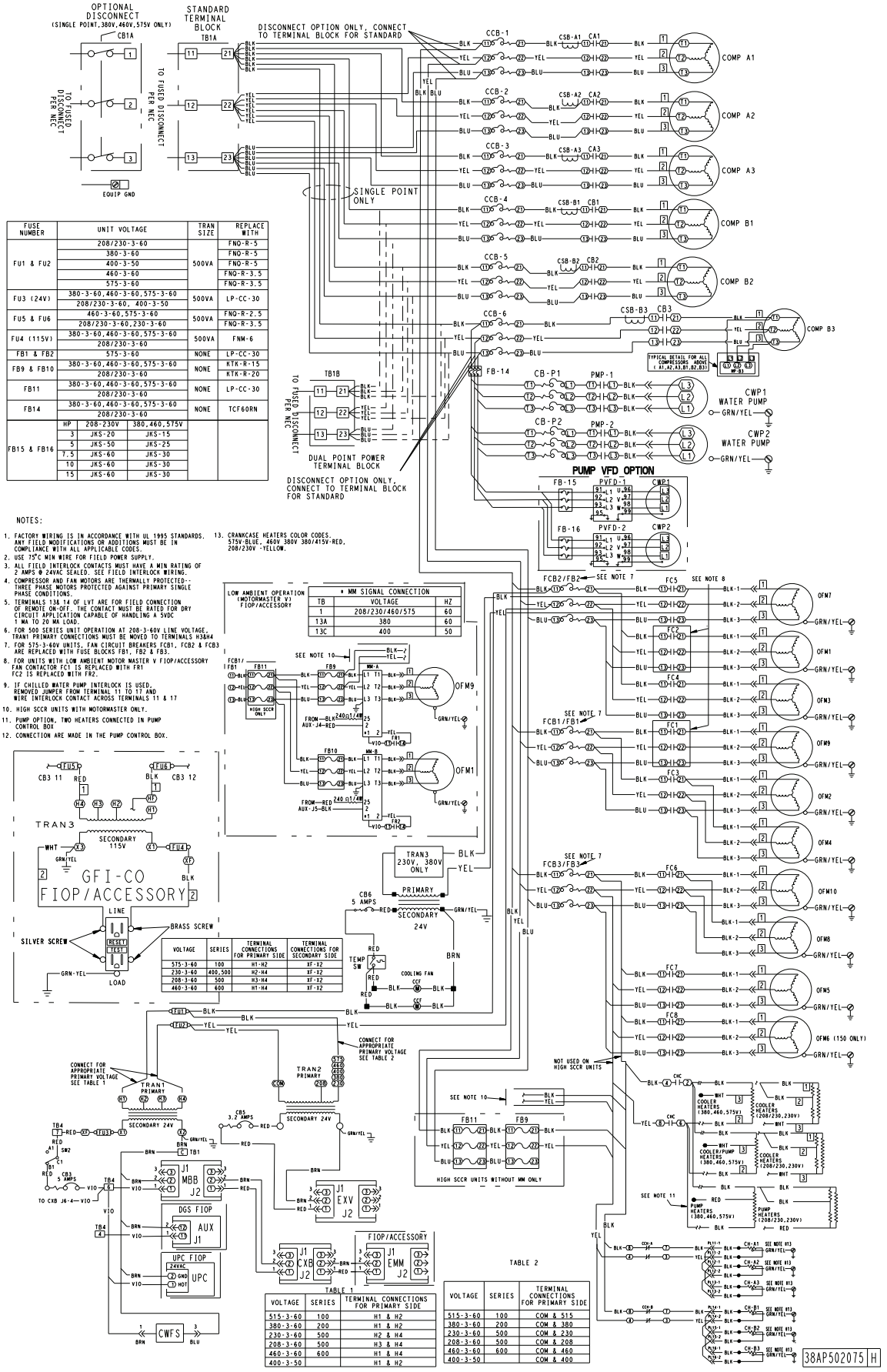

FUSE NUMBER	UNIT VOLTAGE	TRAN SIZE	REPLACE WITH
FU1 & FU2	208/230-3-60	500VA	FNQ-R-5
	380-3-60		FNQ-R-5
	400-3-50		FNQ-R-5
	460-3-60		FNQ-R-3.5
	575-3-60		FNQ-R-3.5
FU3 (24V)	380-3-60,460-3-60,575-3-60	500VA	LP-CC-30
	208/230-3-60, 400-3-50		
FU5 & FU6	460-3-60,575-3-60	500VA	FNQ-R-2.5
	208/230-3-60,230-3-60		FNQ-R-3.5
FU4 (115V)	380-3-60,460-3-60,575-3-60	500VA	FNM-6
	208/230-3-60		
FB1 & FB2	575-3-60	NONE	LP-CC-30
FB9 & FB10	380-3-60,460-3-60,575-3-60	NONE	KTK-R-15
	208/230-3-60		KTK-R-20
FB11	380-3-60,460-3-60,575-3-60	NONE	LP-CC-30
	208/230-3-60		
FB14	380-3-60,460-3-60,575-3-60	NONE	TCF60RN
	208/230-3-60		

FB15 & FB16	HP	208-230V	380,460,575V
	3	JKS-20	JKS-15
	5	JKS-50	JKS-25
	7.5	JKS-60	JKS-30
	10	JKS-60	JKS-30
	15	JKS-60	JKS-30

NOTES:

1. FACTORY WIRING IS IN ACCORDANCE WITH UL 1995 STANDARDS. ANY FIELD MODIFICATIONS OR ADDITIONS MUST BE IN COMPLIANCE WITH ALL APPLICABLE CODES.
2. USE 75°C MIN WIRE FOR FIELD POWER SUPPLY.
3. ALL FIELD INTERLOCK CONTACTS MUST HAVE A MIN RATING OF 2 AMPS @ 24VAC SEALED. SEE FIELD INTERLOCK WIRING.
4. COMPRESSOR AND FAN MOTORS ARE THERMALLY PROTECTED--THREE PHASE MOTORS PROTECTED AGAINST PRIMARY SINGLE PHASE CONDITIONS.
5. TERMINALS 13& 14 OF LVT ARE FOR FIELD CONNECTION OF REMOTE ON-OFF. THE CONTACT MUST BE RATED FOR DRY CIRCUIT APPLICATION CAPABLE OF HANDLING A 5VDC 1 MA TO 20 MA LOAD.
6. FOR 500 SERIES UNIT OPERATION AT 208-3-60V LINE VOLTAGE, TRAN1 PRIMARY CONNECTIONS MUST BE MOVED TO TERMINALS H3&H4
7. FOR 575-3-60V UNITS, FAN CIRCUIT BREAKERS FCB1, FCB2 & FCB3 ARE REPLACED WITH FUSE BLOCKS FB1, FB2 & FB3.
8. FOR UNITS WITH LOW AMBIENT MOTOR MASTER V FIOP/ACCESSORY FAN CONTACTOR FC1 IS REPLACED WITH FR1 FC2 IS REPLACED WITH FR2.
9. IF CHILLED WATER PUMP INTERLOCK IS USED, REMOVED JUMPER FROM TERMINAL 11 TO 17 AND WIRE INTERLOCK CONTACT ACROSS TERMINALS 11 & 17
10. HIGH SCCR UNITS WITH MOTORMASTER ONLY.
11. PUMP OPTION, TWO HEATERS CONNECTED IN PUMP CONTROL BOX
12. CONNECTION ARE MADE IN THE PUMP CONTROL BOX.
13. CRANKCASE HEATERS COLOR CODES. 575V-BLUE, 460V 380V 380/415V-RED, 208/230V -YELLOW.

* MM SIGNAL CONNECTION		
TB	VOLTAGE	HZ
1	208/230/460/575	60
13A	380	60
13C	400	50

VOLTAGE	SERIES	TERMINAL CONNECTIONS FOR PRIMARY SIDE
575-3-60	100	H1-H2
230-3-60	400,500	H2-H4
208-3-60	500	H3-H4
460-3-60	600	H1-H4

VOLTAGE	SERIES	TERMINAL CONNECTIONS FOR PRIMARY SIDE
515-3-60	100	H1 & H2
380-3-60	200	H1 & H2
230-3-60	500	H2 & H4
208-3-60	500	H3 & H4
460-3-60	600	H1 & H4
400-3-50		H1 & H2

TABLE 2

VOLTAGE	SERIES	TERMINAL CONNECTIONS FOR PRIMARY SIDE
515-3-60	100	COM & 515
380-3-60	200	COM & 380
230-3-60	500	COM & 230
208-3-60	500	COM & 208
460-3-60	600	COM & 460
400-3-50		COM & 400

NOTE: Typical drawing shown. Refer to unit wiring diagram label for specific unit.

Fig. 18 — Typical Wiring Schematic, 30RAP130-150 Units — Power Wiring

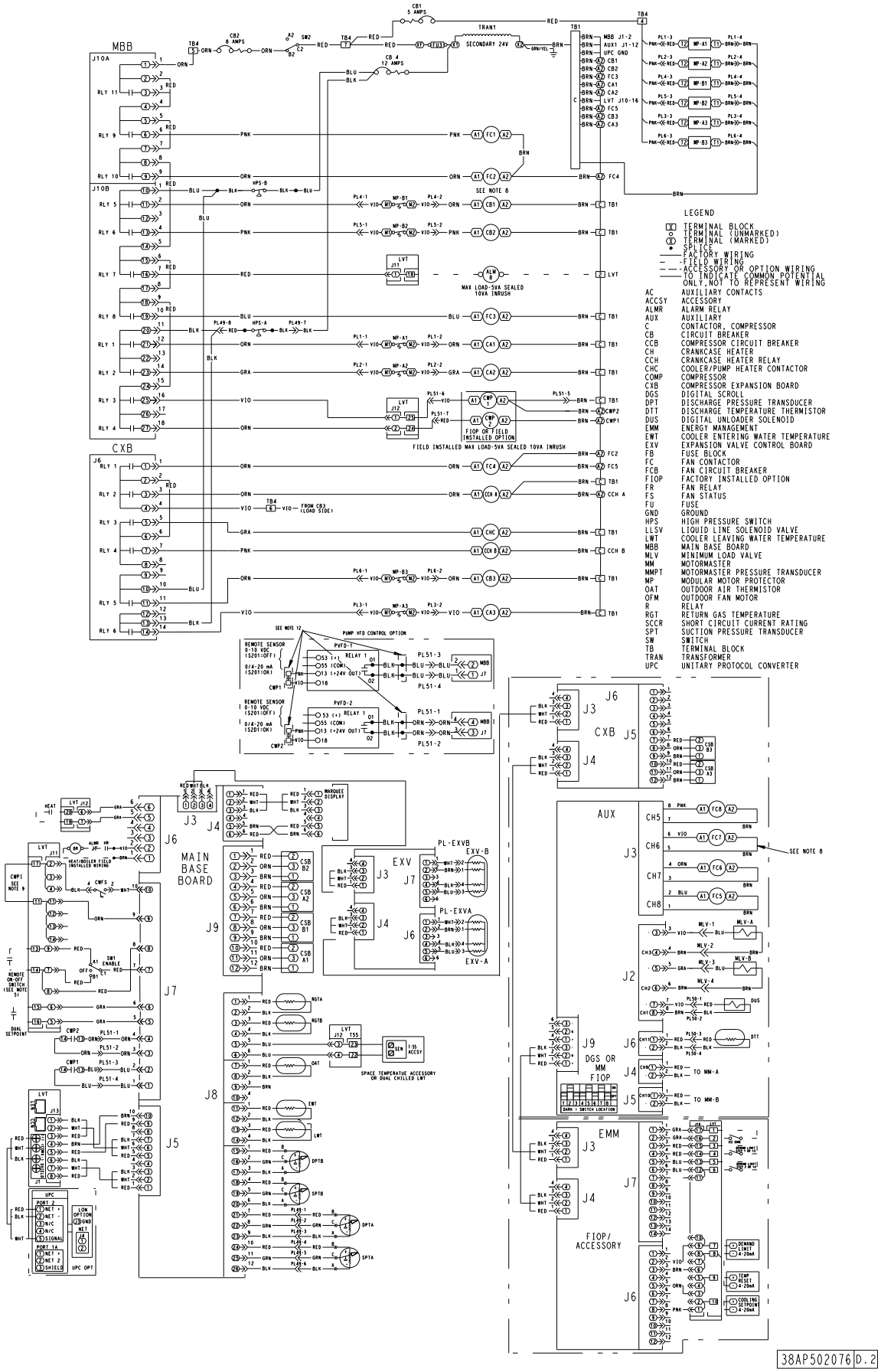

NOTE: Typical drawing shown. Refer to unit wiring diagram label for specific unit.

Fig. 19 — Typical Wiring Schematic, 30RAP130-150 Units — Control Wiring

LEGEND FOR FIG. 3-19

ALMR — Alarm Relay
AUX — Auxiliary
BR — Boiler Relay
C — Contactor, Compressor
CB — Circuit Breaker
CCB — Compressor Circuit Breaker
CH — Crankcase Heater
CHC — Cooler/Pump Heater Contactor
COMP — Compressor
CSB — Current Sensor Board
CWFS — Chilled Water Flow Switch
CWP — Chilled Water Pump
CXB — Compressor Expansion Board
DGS — Digital Scroll Compressor
DPT — Discharge Pressure Transducer
DTT — Discharge Temperature Thermistor
DUS — Digital Unloader Solenoid
EMM — Energy Management
EWT — Entering Water Temperature
EXV — Electronic Expansion Valve
FB — Fuse Block
FC — Fan Contactor
FCB — Fan Circuit Breaker
FIOP — Factory-Installed Option
FR — Fan Relay
FU — Fuse
FVFD Fan Variable Frequency Drive
GND — Ground
HPS — High-Pressure Switch
HR — Heat Relay
LON — Local Operating Network
LVT — Low Voltage Terminal Block
LWT — Leaving Water Temperature
MBB — Main Base Board
MLV — Minimum Load Valve
MM — Motormaster
MP — Motor Protector
MS — Manual Starter
NEC — National Electrical Code
OAT — Outdoor-Air Thermistor
OFM — Outdoor Fan Motor
RGT — Return Gas Thermistor
SCCR — Short Circuit Current Rating
SPT — Suction Pressure Transducer
SW — Switch
TB — Terminal Block
TNKR — Storage Tank Heater Relay
TRAN — Transformer
UPC — Unitary Protocol Converter
VFD — Variable Frequency Drive
X — Terminal Block
Terminal (Unmarked)
X — Terminal (Marked)
Splice
Factory Wiring
Field Wiring
Accessory or Option Wiring
To indicate common potential only; not to represent wiring.

Main Base Board (MBB) — See Fig. 20. The MBB is the heart of the *Comfort*Link control system. It contains the major portion of operating software and controls the operation of the machine. The MBB continuously monitors input/output channel information received from its inputs and from all other modules. The MBB receives inputs from the discharge and suction pressure transducers and thermistors. See Table 5. The MBB also receives the feedback inputs from each compressor current sensor board and other status switches. See Tables 6 and 7. The MBB also controls several outputs. Relay outputs controlled by the MBB are shown in Tables 8 and 9. Information is transmitted between modules via a 3-wire communication bus or LEN (Local Equipment Network). The CCN (Carrier Comfort Network) bus is also supported. Connections to both LEN and CCN buses are made at the LVT (low voltage terminal). See Fig. 20 and 21.

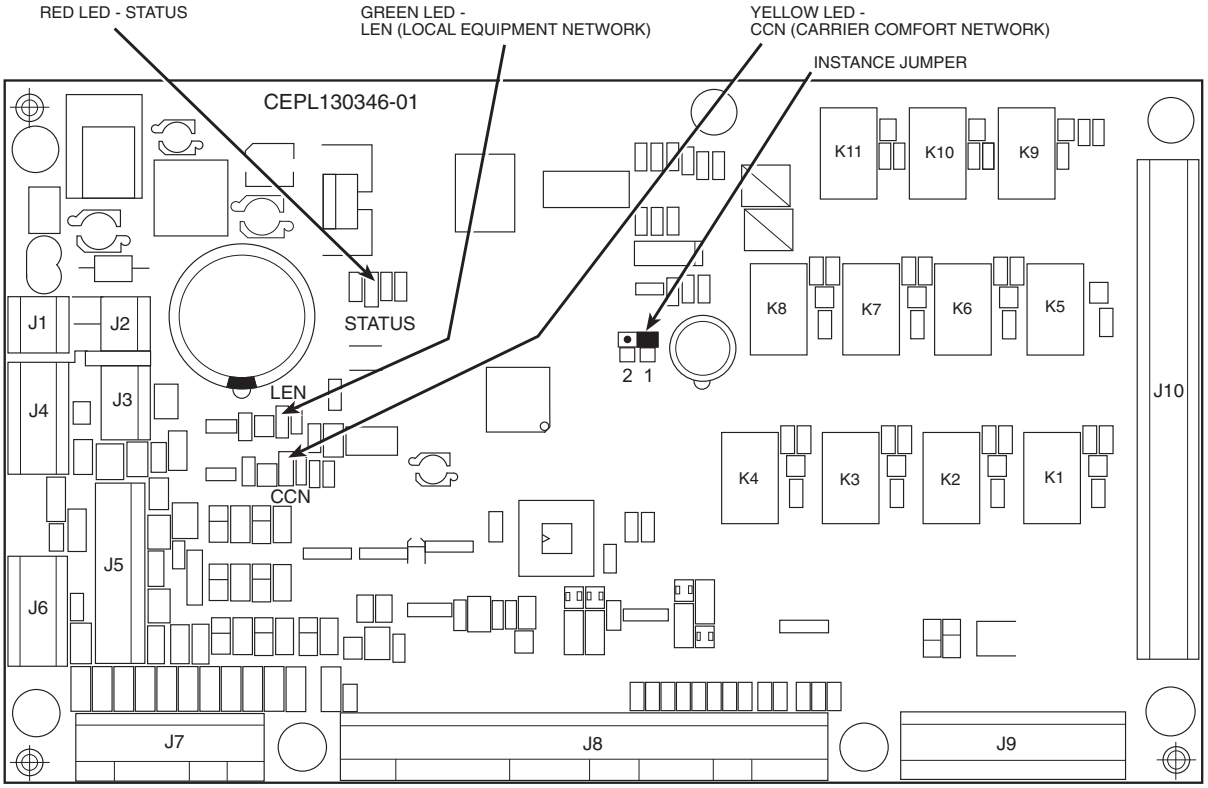

Fig. 20 — Main Base Board

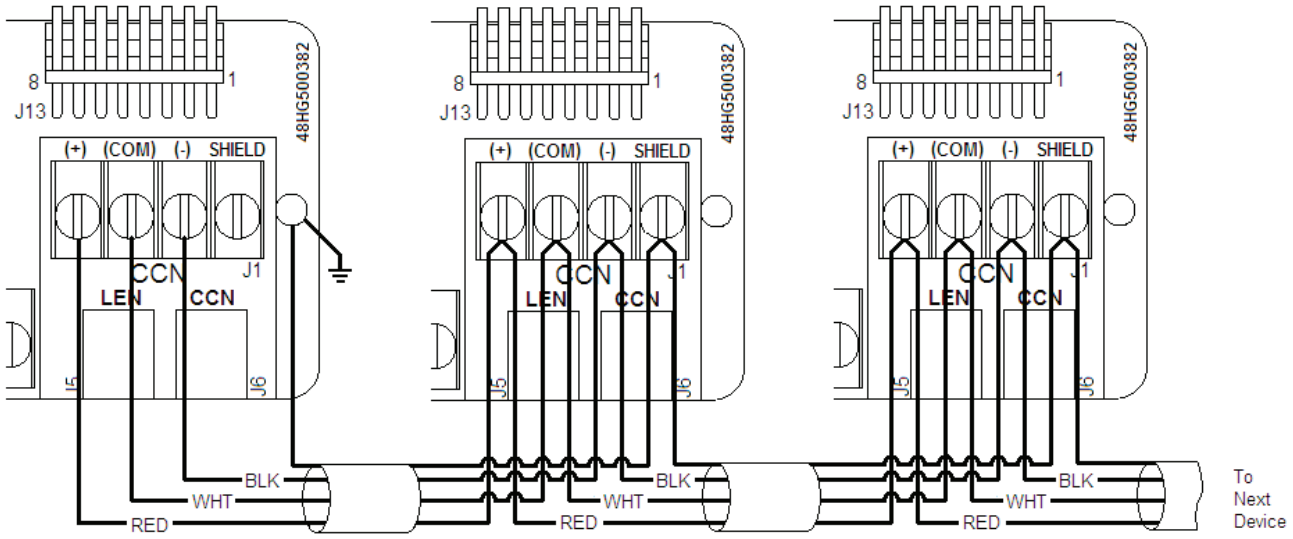

Fig. 21 — CCN Wiring Diagram

Energy Management Module (EMM) — EMM is available as a factory-installed option or as a field-installed accessory. The EMM module receives 4 to 20 mA inputs for the leaving fluid temperature reset, cooling set point and demand limit functions. The EMM module also receives the switch inputs for the field-installed 2-stage demand limit and ice done functions. The EMM module communicates the status of all inputs with the MBB, and the MBB adjusts the control point, capacity limit, and other functions according to the inputs received.

Current Sensor Board (CSB) — The CSB is used to monitor the status of the compressors by measuring current and providing an analog input to the main base board (MBB) or compressor expansion module (CXB).

Auxiliary (AUX) Board — The AUX board is used with the digital scroll option and the low ambient head pressure option. It provides additional inputs and outputs for digital scroll control along with analog outputs to control head pressure control fan speeds. See Tables 10 and 11.

Electronic Expansion Valve (EXV) Board — The EXV board communicates with the MBB and directly controls the expansion valves to maintain the correct compressor superheat.

Compressor Expansion Board (CXB) — The CXB communicates with the MBB and directly controls additional compressors for contactors, cooler/pump heaters, and compressor crankcase heater relays for sizes 070-150.

Enable/Off/Remote Control Switch — The Enable/Off/Remote Control switch (SW1) is a 3-position switch used to control the chiller. When switched to the Enable position the chiller is under its own control. Move the switch to the Off position to shut the chiller down. Move the switch to the Remote Control position and a field-installed dry contact can be used to start the chiller. The contacts must be capable of handling a 24 vac, 50-mA load. In the Enable and Remote Control (dry contacts closed) positions, the chiller is allowed to operate and respond to the scheduling configuration, CCN configuration, and set point data. See Fig. 22.

Emergency On/Off Switch — The Emergency On/Off switch (SW2) should only be used when it is required to shut the chiller off immediately. Power to the MBB, EMM, and marquee display is interrupted when this switch is off and all outputs from these modules will be turned off. The cooler and pump heaters are energized.

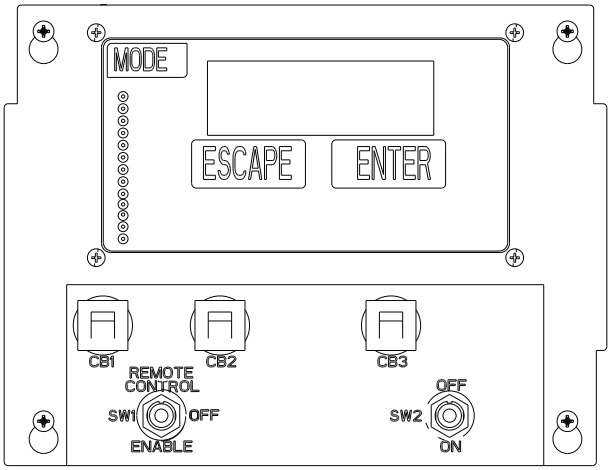

Fig. 22 — Enable/Off/Remote Control Switch, and Emergency On/Off Switch Locations

Board Addresses — The main base board (MBB) has a 3-position instance jumper that must be set to "1." The electronic expansion valve (EXV) board, compressor expansion board (CXB), and energy management module (EMM) board have 4-position DIP switches. All switches are set to "On" for these boards. The auxiliary board (AUX) has an 8-position DIP switch. Switches 2, 5, and 7 are set to "On."

Control Module Communication

RED LED — Proper operation of the control boards can be visually checked by looking at the red status LEDs. During initial power-up the LED will signal a 1/2-second blink 3 times, followed by a pause. This indicates that the processor is booting. If this pattern repeats, it is an indication that the control board is in a continuous reboot loop and the board should be replaced. When operating correctly, the red status LEDs should be blinking in unison at a rate of once every 2 seconds. If the red LEDs are not blinking in unison, verify that correct power is being supplied to all modules. Be sure that the main control is supplied with the current software. If necessary, reload current software. If the problem still persists, replace the control board. A red LED that is lit continuously or blinking at a rate of once per second or faster indicates that the control board should be replaced.

GREEN LED — The MBB has one green LED. The Local Equipment Network (LEN) LED should always be blinking whenever power is on. All other boards have a LEN LED which should be blinking whenever power is on. Check LEN connections for potential communication errors at the board J3 and/or J4 connectors. Communication between modules is accomplished by a 3-wire sensor bus. These 3 wires run in parallel from module to module. The J4 connector on the MBB provides both power and communication directly to the scrolling marquee display only.

YELLOW LED — The MBB has one yellow LED. The Carrier Comfort Network (CCN) LED will blink during times of network communication.

Table 5 — Thermistor Designations (MBB)

THERMISTOR	PIN CONNECTION POINT	THERMISTOR INPUT	REF. VOLTAGE
LWT	J8-13,14 (MBB)	Cooler Leaving Fluid Temperature	4 vdc
EWT	J8-11,12 (MBB)	Cooler Entering Fluid Temperature	4 vdc
RGTA	J8-1,2 (MBB)	Circuit A Return Gas Temperature	4 vdc
RGTB	J8-3,4 (MBB)	Circuit B (035-150 only) Return Gas Temperature	4 vdc
OAT	J8-7,8 (MBB)	Outdoor-Air Temperature Sensor	4 vdc
SPT/DLWT	J8-5,6 (MBB) LVT-22,23	Accessory Remote Space Temperature Sensor or Dual LWT Sensor	4 vdc

Table 6 — Status Inputs (MBB)

STATUS SWITCH	PIN CONNECTION POINT	REF. VOLTAGE
CHILLED WATER PUMP 1, PM.F.1	J7-1,2	24 vac
CHILLED WATER PUMP 2, PM.F.2	J7-3,4	24 vac
REMOTE ON/OFF	LVT-13,14	24 vac
COOLER FLOW SWITCH	J7-9,10	24 vac
COMPRESSOR FAULT SIGNAL, A1	J9-11,12	5 vdc
COMPRESSOR FAULT SIGNAL, A2	J9-5,6	5 vdc
COMPRESSOR FAULT SIGNAL, B1	J9-8,9	5 vdc
COMPRESSOR FAULT SIGNAL, B2	J9-2,3	5 vdc

Table 7 — Status Inputs (CXB)

STATUS SWITCH	PIN CONNECTION POINT	REF. VOLTAGE
COMPRESSOR FAULT SIGNAL, A3 (080,090,115,130,150)	J5-11,12	5 vdc
COMPRESSOR FAULT SIGNAL, B3 (070-150)	J5-8,9	5 vdc

Table 8 — Output Relays (MBB)

RELAY NO.	DESCRIPTION
K1	Energize Compressor A1 (010-050, 070-150) Energize Compressor A1 and Condenser Fan Contactor 3 (055,060)
K2	Energize Compressor A2 (all but 010, 015 60 Hz)
K3	Energize Chilled Water Pump 1 Output
K4	Energize Chilled Water Pump 2 Output
K5	Energize Compressor B1 (035-050, 070-150) Energize Compressor B1 and Condenser Fan Contactor 3 (055,060)
K6	Energize Compressor B2 (035-150)
K7	Alarm Relay
K8	Cooler/Pump Heater (010-060), Energize Condenser Fan Contactor 3 (070-150)
K9	Energize Condenser Fan Contactor 1 (018-150)
K10	Energize Condenser Fan Contactor 2 (018-150)
K11	Minimum Load Valve (010-060)

Table 9 — Output Relays (CXB)

RELAY NO.	DESCRIPTION
K1	Energize Compressor Fan Contactor 4
K2	Crankcase Heater Relay Output, Circuit A
K3	Cooler / Pump Heater
K4	Crankcase Heater Relay Output, Circuit B
K5	Energize Compressor B3 (070-150)
K6	Energize Compressor A3 (080,090,115,130,150)

Table 10 — Inputs (AUX)

NAME	DESCRIPTION	PIN CONNECTION POINT	REF. VOLTAGE
DTT	Discharge Temperature Thermistor	J6-1,2	5 vdc

Table 11 — Outputs (AUX)

NAME	DESCRIPTION	PIN CONNECTION POINT	REF. VOLTAGE
MLV-A	Minimum Load Valve (070-150)	J2-3,4	24 vac
MLV-B	Minimum Load Valve (070-150)	J2-5,6	24 vac
DUS	Digital Unloader Solenoid	J2-7,8	24 vac
FC-5	Fan Contactor (070-150)	J3-1,2	24 vac
FC-6	Fan Contactor (080-150)	J3-3,4	24 vac
MM-A	Motormaster® Ckt A	J4-1,2	2-10 vdc
MM-B	Motormaster Ckt B	J5-1,2	2-10 vdc

Carrier Comfort Network® (CCN) Interface — The 30RAP chiller units can be connected to the CCN if desired. The communication bus wiring is a shielded, 3-conductor cable with drain wire and is supplied and installed in the field. See Table 12. The system elements are connected to the communication bus in a daisy chain arrangement. The positive pin of each system element communication connector must be wired to the positive pins of the system elements on either side of it. This is also required for the negative and signal ground pins of each system element. Wiring connections for CCN should be made at LVT. Consult the CCN Contractor's Manual for further information. Refer to Fig. 21.

NOTE: Conductors and drain wire must be 20 AWG (American Wire Gage) minimum stranded, tinned copper. Individual conductors must be insulated with PVC, PVC/nylon, vinyl, Teflon*, or polyethylene. An aluminum/polyester 100% foil shield and an outer jacket of PVC, PVC/nylon, chrome vinyl, or Teflon with a minimum operating temperature range of –20 C to 60 C is required. Wire manufactured by Alpha (2413 or 5463), American (A22503), Belden (8772), or Columbia (02525) meets the above mentioned requirements.

It is important when connecting to a CCN communication bus that a color coding scheme be used for the entire network to simplify the installation. It is recommended that red be used for the signal positive, black for the signal negative, and white for the signal ground. Use a similar scheme for cables containing different colored wires.

At each system element, the shields of its communication bus cables must be tied together. If the communication bus is entirely within one building, the resulting continuous shield must be connected to a ground at one point only. If the communication bus cable exits from one building and enters another, the shields must be connected to grounds at the lightning suppressor in each building where the cable enters or exits the building (one point per building only). To connect the unit to the network:

1. Turn off power to the control box.
2. Cut the CCN wire and strip the ends of the red (+), white (ground), and black (–) conductors. (Substitute appropriate colors for different colored cables.)
3. Connect the red wire to (+) terminal on LVT of the plug, the white wire to COM terminal, and the black wire to the (–) terminal.
4. The RJ14 CCN connector on LVT can also be used, but is only intended for temporary connection (for example, a laptop computer running Service Tool).

IMPORTANT: A shorted CCN bus cable will prevent some routines from running and may prevent the unit from starting. If abnormal conditions occur, unplug the connector. If conditions return to normal, check the CCN connector and cable. Run new cable if necessary. A short in one section of the bus can cause problems with all system elements on the bus.

Table 12 — CCN Communication Bus Wiring

MANUFACTURER	PART NO.	
	REGULAR WIRING	PLENUM WIRING
Alpha	1895	—
American	A21451	A48301
Belden	8205	884421
Columbia	D6451	—
Manhattan	M13402	M64430
Quabik	6130	—

Alarm Control

ALARM ROUTING CONTROL — Alarms recorded on the chiller can be routed through the CCN. To configure this option, the *Comfort*Link control must be configured to determine which CCN elements will receive and process alarms. Input for the decision consists of eight digits, each of which can be set to either 0 or 1. Setting a digit to 1 specifies that alarms will be sent to the system element that corresponds to that digit. Setting all digits to 0 disables alarm processing. The factory default is 00000000. See Fig. 23. The default setting is based on the assumption that the unit will not be connected to a network. If the network does not contain a ComfortVIEW, ComfortWORKS™, TeLink, DataLINK™, or BAClink module, enabling this feature will only add unnecessary activity to the CCN communication bus.

This option can be modified with Network Service Tool. It cannot be modified with the scrolling marquee display.

Typical configuration of the Alarm Routing variable is 11010000. This Alarm Routing status will transmit alarms to ComfortVIEW software, TeLink, BAClink, and DataLINK.

ALARM EQUIPMENT PRIORITY — The ComfortVIEW software uses the equipment priority value when sorting alarms by level. The purpose of the equipment priority value is to determine the order in which to sort alarms that have the same level. A priority of 0 is the highest and would appear first when sorted. A priority of 7 would appear last when sorted. For example, if two chillers send out identical alarms, the chiller with the higher priority would be listed first. The default is 4. This variable can only be changed when using ComfortVIEW software or Network Service Tool. This variable cannot be changed with the scrolling marquee display.

COMMUNICATION FAILURE RETRY TIME — This variable specifies the amount of time that will be allowed to elapse between alarm retries. Retries occur when an alarm is not acknowledged by a network alarm acknowledger, which may be either a ComfortVIEW software or TeLink. If acknowledgment is not received, the alarm will be re-transmitted after the number of minutes specified in this decision. This variable can only be changed with ComfortVIEW software or Network Service Tool. This variable cannot be changed with the scrolling marquee display.

RE-ALARM TIME — This variable specifies the amount of time that will be allowed to elapse between re-alarms. A re-alarm occurs when the conditions that caused the initial alarm continue to persist for the number of minutes specified in this decision. Re-alarming will continue to occur at the specified interval until the condition causing the alarm is corrected. This variable can only be changed with ComfortVIEW software or Network Service Tool. This variable cannot be changed with the scrolling marquee display.

ALARM SYSTEM NAME — This variable specifies the system element name that will appear in the alarms generated by the unit control. The name can be up to 8 alphanumeric characters in length. This variable can only be changed with ComfortVIEW software or Network Service Tool. This variable cannot be changed with the scrolling marquee display.

Sensors — The electronic control uses 4 to 7 thermistors to sense temperatures for controlling chiller operation. See Table 5. These sensors are outlined below. Thermistors RGTA, RGTB, EWT, LWT, and OAT are 5 kΩ at 77 F (25 C) thermistors and are identical in temperature versus resistance and voltage drop performance. The dual chiller thermistor is 5 kΩ at 77 F (25 C) thermistor. Space temperature thermistor is a 10 kΩ at 77 F (25 C). The DTT thermistor is an 86 kΩ at 77 F (25 C) thermistor. See Thermistors section for temperature-resistance-voltage drop characteristics.

* Registered trademark of Dupont.

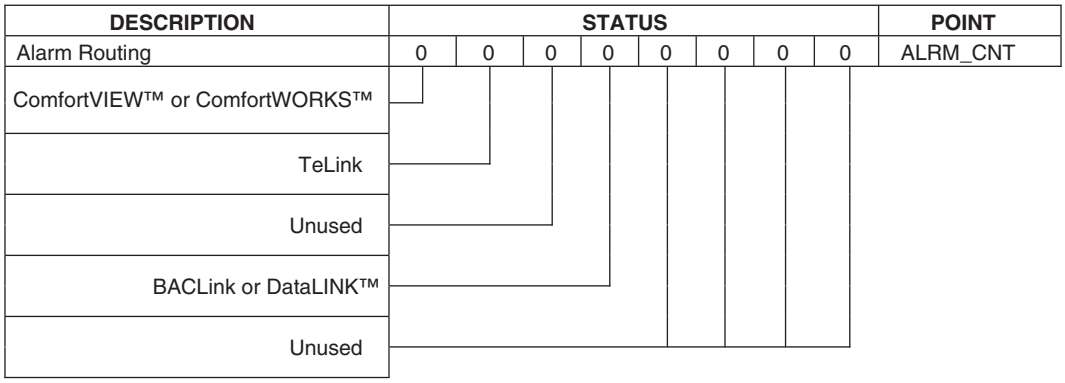

Fig. 23 — Alarm Routing Control

COOLER LEAVING FLUID SENSOR — The thermistor is installed in a well in the factory-installed leaving fluid piping coming from the bottom of the brazed-plate heat exchanger.

COOLER ENTERING FLUID SENSOR — The thermistor is installed in a well in the factory-installed entering fluid piping coming from the top of the brazed-plate heat exchanger.

COMPRESSOR RETURN GAS TEMPERATURE SENSOR — These thermistors are installed in a well located in the suction line of each circuit.

OUTDOOR-AIR TEMPERATURE SENSOR (OAT) — This sensor is factory installed on a bracket which is inserted through the base pan of the unit.

DISCHARGE TEMPERATURE THERMISTOR (DTT) — This sensor is only used on units with the digital compressor option. The sensor is mounted on the discharge line close to the discharge of the digital compressor. It attaches to the discharge line using a spring clip and protects the system from high discharge gas temperature when the digital compressor is used. This sensor is connected to the AUX board.

REMOTE SPACE TEMPERATURE SENSOR OR DUAL LEAVING WATER TEMPERATURE SENSOR — One of two inputs can be connected to the LVT. See appropriate sensor below.

Remote Space Temperature Sensor — Sensor (part no. 33ZCT55SPT) is an accessory sensor that is remotely mounted in the controlled space and used for space temperature reset. The sensor should be installed as a wall-mounted thermostat would be (in the conditioned space where it will not be subjected to either a cooling or heating source or direct exposure to sunlight, and 4 to 5 ft above the floor).

Space temperature sensor wires are to be connected to terminals in the unit main control box. The space temperature sensor includes a terminal block (SEN) and a RJ11 female connector. The RJ11 connector is used access into the Carrier Comfort Network® (CCN) at the sensor.

To connect the space temperature sensor (Fig. 24):

1. Using a 20 AWG twisted pair conductor cable rated for the application, connect 1 wire of the twisted pair to one SEN terminal and connect the other wire to the other SEN terminal located under the cover of the space temperature sensor.
2. Connect the other ends of the wires to LVT-22,23 located in the unit control box.
3. Units on the CCN can be monitored from the space at the sensor through the RJ11 connector, if desired. To wire the RJ11 connector into the CCN (Fig. 25):

IMPORTANT: The cable selected for the RJ11 connector wiring MUST be identical to the CCN communication bus wire used for the entire network. Refer to Table 12 for acceptable wiring.

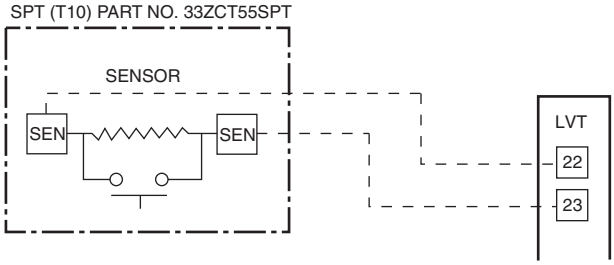

Fig. 24 — Typical Space Temperature Sensor Wiring

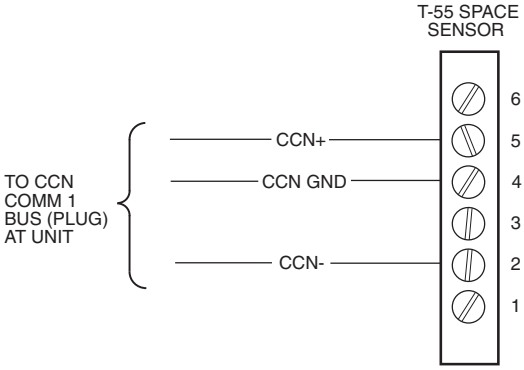

Fig. 25 — CCN Communications Bus Wiring to Optional Space Sensor RJ11 Connector

1. Cut the CCN wire and strip ends of the red (+), white (ground), and black (–) conductors. (If another wire color scheme is used, strip ends of appropriate wires.)
2. Insert and secure the red (+) wire to terminal 5 of the space temperature sensor terminal block.
3. Insert and secure the white (ground) wire to terminal 4 of the space temperature sensor.
4. Insert and secure the black (–) wire to terminal 2 of the space temperature sensor.
5. Connect the other end of the communication bus cable to the remainder of the CCN communication bus.

Dual Leaving Water Temperature Sensor — For dual chiller applications (parallel only are supported), connect the dual chiller leaving fluid temperature sensor (refer to Configuring and Operating Dual Chiller Control section on page 43) to the space temperature input of the Master chiller. If space temperature is required for reset applications, connect the sensor to the Slave chiller and configure the slave chiller to broadcast the value to the Master chiller. The sensor wire must not be routed with any power wire.

Energy Management Module (Fig. 26) — This factory-installed option (FIOP) or field-installed accessory is used for the following types of temperature reset, demand limit, and/or ice features:

- 4 to 20 mA leaving fluid temperature reset (requires field-supplied 4 to 20 mA generator)
- 4 to 20 mA cooling set point reset (requires field-supplied 4 to 20 mA generator)
- Discrete inputs for 2-step demand limit (requires field-supplied dry contacts capable of handling a 24 vac, 50 mA load)
- 4 to 20 mA demand limit (requires field-supplied 4 to 20 mA generator)
- Discrete input for Ice Done switch (requires field-supplied dry contacts capable of handling a 24 vac, 50 mA load)

See Temperature Reset and Demand Limit sections on pages 43 and 49 for further details.

⚠ CAUTION

Care should be taken when interfacing with other manufacturer's control systems due to possible power supply differences, full wave bridge versus half wave rectification. The two different power supplies cannot be mixed. *Comfort*Link controls use half wave rectification. A signal isolation device should be utilized if a full wave bridge signal generating device is used.

Loss-of-Cooler Flow Protection — A proof-of-cooler flow device is factory installed in all chillers. It is recommended that proper operation of the switch be verified on a regular basis.

Electronic Expansion Valves (EXVs) — All units are equipped from the factory with EXVs. Each refrigeration circuit is also supplied with a factory-installed liquid line filter drier and sight glass.

The EXV is set at the factory to maintain 9° F (5.0° C) suction superheat leaving the cooler by metering the proper amount of refrigerant into the cooler. The superheat set point is adjustable, *but should not be adjusted unless absolutely necessary*.

The EXV is designed to limit the cooler saturated suction temperature to 50 F (12.8 C). This makes it possible for unit to start at high cooler fluid temperatures without overloading the compressor.

Capacity Control — The control system cycles compressors, digital scroll modulating solenoid (if equipped), and minimum load valve solenoids (if equipped) to maintain the user-configured leaving chilled fluid temperature set point. Entering fluid temperature is used by the main base board (MBB) to determine the temperature drop across the cooler and is used in determining the optimum time to add or subtract capacity stages. The chilled fluid temperature set point can be automatically reset by the return fluid temperature, space, or outdoor-air temperature reset features. It can also be reset from an external 4 to 20-mA signal (requires energy management module FIOP or accessory).

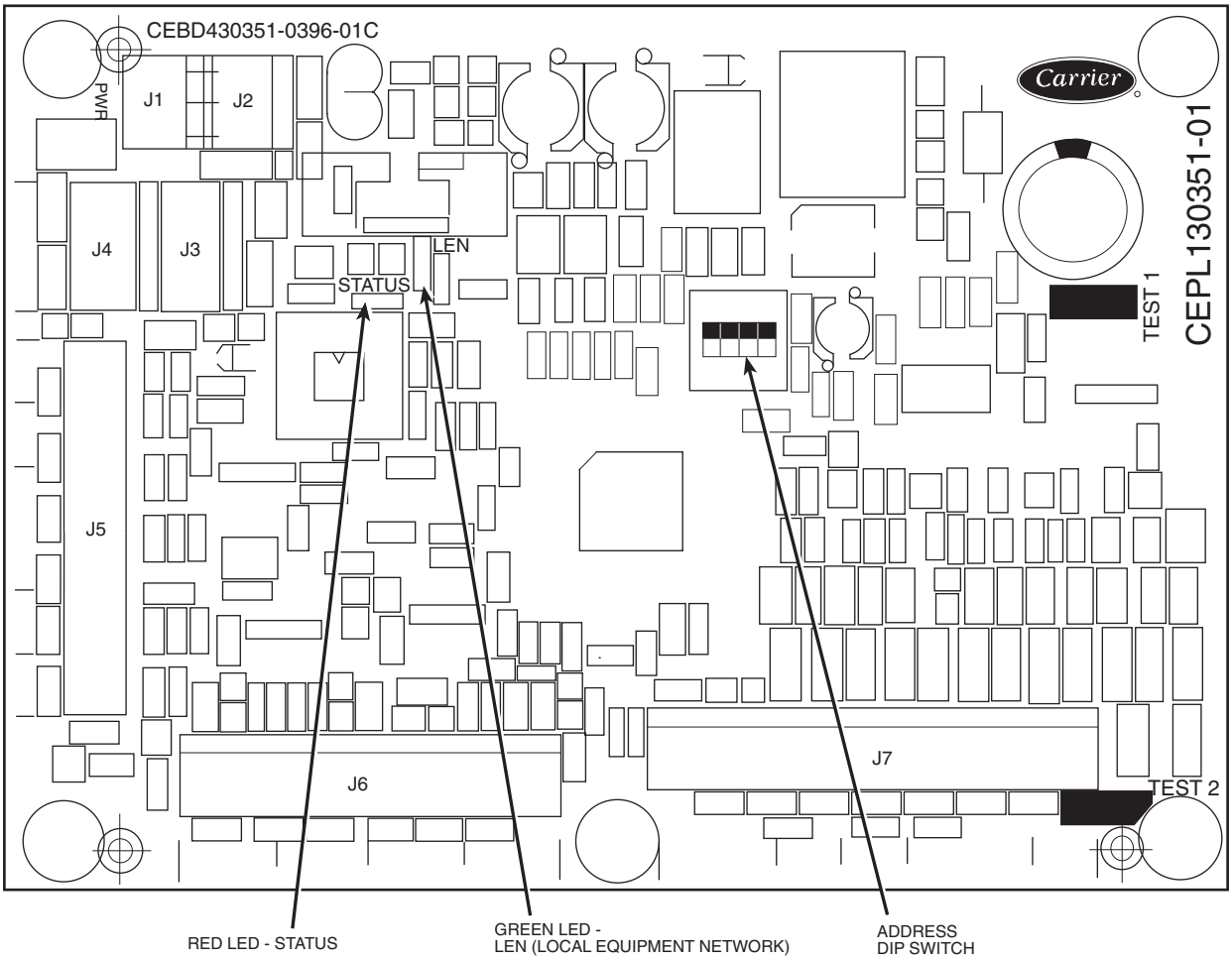

Fig. 26 — Energy Management Module

The standard control has an automatic lead-lag feature built in which determines the wear factor (combination of starts and run hours) for each compressor. If all compressors are off and less than 30 minutes has elapsed since the last compressor was turned off, the wear factor is used to determine which compressor to start next. If no compressors have been running for more than 30 minutes and the leaving fluid temperature is greater than the saturated condensing temperature, the wear factor is still used to determine which compressor to start next. If the leaving fluid temperature is less than the saturated condensing temperature, then the control will start either compressor A1 or compressor B1 first, depending on the user-configurable circuit lead-lag value. For units with the minimum load control valve, the A circuit with the minimum load valve is always the lead circuit. The A circuit is also always the lead for units with the digital compressor option. On units with the digital scroll option, the A1 compressor operates continuously, providing close leaving chilled water control. For this reason, on/off cycling of the unit's compressors is dramatically reduced, which in turn reduces wear associated with compressor start/stop cycles.

The EXVs will provide a controlled start-up. During start-up, the low pressure logic will be bypassed for $2^1/_2$ minutes to allow for the transient changes during start-up. As additional stages of compression are required, the processor control will add them. See Table 13.

If a circuit is to be stopped, the compressor with the lowest wear factor will be shut off first except when a digital compressor is used. The digital compressor is always the last compressor to shut off.

The capacity control algorithm runs every 30 seconds. The algorithm attempts to maintain the Control Point at the desired set point. Each time it runs, the control reads the entering and leaving fluid temperatures. The control determines the rate at which conditions are changing and calculates 2 variables based on these conditions. Next, a capacity ratio is calculated using the 2 variables to determine whether or not to make any changes to the current stages of capacity. This ratio value ranges from –100 to +100%. If the next stage of capacity is a compressor, the control starts (stops) a compressor when the ratio reaches +100% (–100%). If installed, the minimum load valve solenoid will be energized with the first stage of capacity. Minimum load valve value is a fixed 30% in the total capacity calculation. The control will also use the minimum load valve solenoid as the last stage of capacity before turning off the last compressor. A delay of 90 seconds occurs after each capacity step change. Refer to Table 14.

MINUTES LEFT FOR START — This value is displayed only in the network display tables (using Service Tool, ComfortVIEW™ or ComfortWORKS™ software) and represents the amount of time to elapse before the unit will start its initialization routine. This value can be zero without the machine running in many situations. This can include being unoccupied, Enable/Off/Remote Control switch in the Off position, CCN not allowing unit to start, Demand Limit in effect, no call for cooling due to no load, and alarm or alert conditions present. If the machine should be running and none of the above are true, a minimum off time (DELY, see below) may be in effect. The machine should start normally once the time limit has expired.

MINUTES OFF TIME (***Configuration→OPT2→ DELY***) — This user-configurable time period is used by the control to determine how long unit operation is delayed after power is applied/restored to the unit. Typically, this time period is configured when multiple machines are located on a single site. For example, this gives the user the ability to prevent all the units from restarting at once after a power failure. A value of zero for this variable does not mean that the unit should be running.

LEAD/LAG DETERMINATION — This is a configurable choice and is factory set to be automatic for all units. The 30RAP units offer an optional digital compressor. When the unit is equipped with a digital scroll compressor and enabled ***(Configuration→UNIT→A1.TY=YES)***, or minimum load, then circuit A is lead ***(Configuration→OPT2→LLCS)***.

If the unit is equipped with Minimum Load Valve (MLV) and option has been enabled, Circuit A will be the last circuit on as capacity is decreasing for the MLV to be active for the last stage of capacity.

The value can be changed to Circuit A or Circuit B leading as desired. Set at automatic, the control will sum the current number of logged circuit starts and one-quarter of the current operating hours for each circuit. The circuit with the lowest sum is started first. Changes to which circuit is the lead circuit and which is the lag are also made when total machine capacity is at 100% or when there is a change in the direction of capacity (increase or decrease) and each circuit's capacity is equal.

LOADING SEQUENCE SELECT — This is configurable as equal circuit loading or staged circuit loading with the default set at equal ***(Configuration→OPT2→LOAD)***. The control determines the order in which the steps of capacity for each circuit are changed. Set to equal, the unit will alternate starting compressors in each circuit as the requirement increases. Set to staged, one circuit will load completely before the second circuit is started. This control choice does NOT have any impact on machines with only one circuit or units with 2 compressors - one in each circuit.

LOW AMBIENT LOCKOUT — The control software has a feature that allows the user to select an outdoor air temperature (OAT) at which mechanical cooling will be disabled. To use this feature, set OAT Lockout Temperature (***Set Points→ COOL→OAT.L***) to a value between –19 and 120 F (–28.3 and 48.9 C). This value should be set to the desired temperature at which no mechanical cooling is required. Any time the feature is active due to the outdoor air temperature being below the field programmed value, the machine will indicate OAT Below Lockout Temp (***Operating Modes→MODE→ MD.OL= ON***). Mechanical cooling will be enabled once the Outdoor Ambient is 3° F (1.6° C) above the ***OAT.L*** set point. The factory default is –20 F (–28.9 C) and indicates that this feature is disabled. If an Outdoor Air Temperature Sensor failure is declared, this feature must be disabled by setting the ***OAT.L*** to –20 F (–28.9 C), to allow the unit to operate.

CAPACITY CONTROL OVERRIDES — The following overrides will modify the normal operation of the routine.

Deadband Multiplier — The user configurable Deadband Multiplier (***Configuration→SLCT→Z.GN***) has a default value of 1.0. The range is from 1.0 to 4.0. When set to other than 1.0, this factor is applied to the capacity Load/Unload Factor. The larger this value is set, the longer the control will delay between adding or removing stages of capacity. Fig. 27 shows how compressor starts can be reduced over time if the leaving water temperature is allowed to drift a larger amount above and below the set point. This value should be set in the range of 3.0 to 4.0 for systems with small loop volumes.

First Stage Override — If the current capacity stage is zero, the control will modify the routine with a 1.2 factor on adding the first stage to reduce cycling. This factor is also applied when the control is attempting to remove the last stage of capacity.

Slow Change Override — The control prevents the capacity stages from being changed when the leaving fluid temperature is close to the set point (within an adjustable deadband) and moving towards the set point.

Table 13 — Part Load Data Percent Displacement, Standard Units with Minimum Load Valve

30RAP UNIT SIZE	CONTROL STEPS	CAPACITY STEPS	CAPACITY %	
		% DISPLACEMENT	CIRCUIT A	CIRCUIT B
010	1	100	100	—
011	1 2 3	40 60 100	100	—
015	1	100	100	—
016	1 2 3	40 60 100	100	—
018	1 2 3	*20 50 100	100	—
020	1 2 3	*24 50 100	100	—
025	1 2 3	*29 50 100	100	—
030	1 2 3	*32 50 100	100	—
035	1 2 3 4 5	*9 23 50 77 100	54	46
040	1 2 3 4 5	*11 23 50 73 100	47	53
045	1 2 3 4 5	*12 24 50 74 100	47	53
050	1 2 3 4 5	*14 25 50 75 100	50	50
055	1 2 3 4 5	*13 23 50 73 100	46	54
060	1 2 3 4 5	*16 25 50 75 100	50	50
070	1 2 3 4 5 6	*13 20 40 60 80 100	40	60
080	1 2 3 4 5 6 7	*9 15 31 46 64 82 100	46	54
090	1 2 3 4 5 6 7	*11 17 33 50 67 83 100	50	50
100	1 2 3 4 5 6	*13 19 38 57 76 100	43	57
115	1 2 3 4 5 6 7	*11 17 33 50 67 83 100	50	50
130	1 2 3 4 5 6 7	*9 15 30 44 63 81 100	44	56
150	1 2 3 4 5 6 7	*11 17 33 50 67 83 100	50	50

*Minimum Load Valve energized.

NOTE: These capacity steps may vary due to different capacity staging sequences.

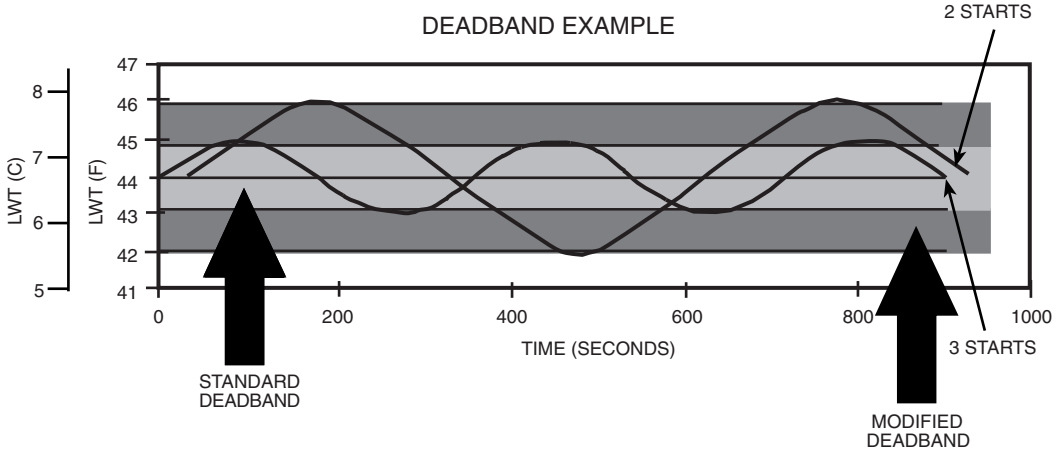

LEGEND
LWT — Leaving Water Temperature

Fig. 27 — Deadband Multiplier

Ramp Loading — Ramp loading (***Configuration→SLCT→CRMP***) limits the rate of change of leaving fluid temperature. If the unit is in a Cooling mode and configured for Ramp Loading, the control makes 2 comparisons before deciding to change stages of capacity. The control calculates a temperature difference between the control point and leaving fluid temperature. If the difference is greater than 4° F (2.2° C) and the rate of change (°F or °C per minute) is more than the configured Cooling Ramp Loading value (***CRMP***), the control does not allow any changes to the current stage of capacity.

Low Entering Fluid Temperature Unloading — When the entering fluid temperature is below the control point, the control will attempt to remove 25% of the current stages being used. If exactly 25% cannot be removed, the control removes an amount greater than 25% but no more than necessary. The lowest stage will not be removed.

Minimum Load Control — If equipped, the minimum load control valve is energized only when one compressor is running on Circuit A and capacity is decreasing, provided that the minimum run time for Circuit B compressors has been satisfied.

Cooler Freeze Protection — The control will try to prevent shutting the chiller down on a Cooler Freeze Protection alarm by removing stages of capacity. If the cooler fluid selected is Water, the freeze point is 34 F (1.1 C). If the cooler fluid selected is Brine, the freeze point is the Brine Freeze Point (***Set Points→FRZ→BR.FZ***). This alarm condition (A207) only references leaving fluid temperature and NOT Brine Freeze point. If the cooler leaving fluid temperature is less than the freeze point plus 2.0° F (1.1° C), the control will immediately remove one stage of capacity. This can be repeated once every 30 seconds.

Low Saturated Suction Protection — The control will try to prevent shutting a circuit down due to low saturated suction conditions by removing stages of capacity. These circuit alert conditions (T116, T117) compare saturated suction temperature to the configured Brine Freeze Point (***Set Points→FRZ→BR.FZ***). The Brine Freeze point is a user-configurable value that must be left at 34 F (1.1 C) for 100% water systems. A lower value may be entered for systems with brine solutions, but this value should be set according to the freeze protection level of the brine mixture. Failure to properly set this brine freeze point value may permanently damage the brazed plate heat exchanger. The control will initiate Mode 7 (Circuit A) or Mode 8 (Circuit B) to indicate a circuit's capacity is limited and that eventually the circuit may shut down.

Head Pressure Control — The main base board (MBB) controls the condenser fans to maintain the lowest condensing temperature possible, and thus the highest unit efficiency. The MBB uses the saturated condensing temperature input from the discharge pressure transducer and outside air temperature sensor to control the fans. Head pressure control is maintained through a calculated set point which is automatically adjusted based on actual saturated condensing and saturated suction temperatures so that the compressor(s) are always operating within the manufacturer's specified envelope (Fig. 28 and 29). If OAT is greater than 70 F before a circuit is starting, then all condenser fan stages will be energized. A fan stage is increased based on SCT (saturated condensing temperature). When the highest SCT is greater than the Fan On Set Point (***Set Points→HEAD→F.ON***), then an additional stage of fan will be added to the current fan stage. Fan On Set Point (***F.ON***) equals Head Set Point (***Set Points→HEAD→H.DP***) except after a fan stage increase when the Head Set Point is increased by Fan Stage Delta (***Set Points→HEAD→F.DLT***). A fan stage is decreased when the SCTs of both circuits are less than the Fan Off Set Point (***Set Points→HEAD →F.OFF***) for two minutes. Table 14 shows the number of fan stages, contactors energized and the fans that are on during the fan stage. Unit sizes 035 to 060 have common fan control. Figure 30 shows the location of each fan and control box within the unit.

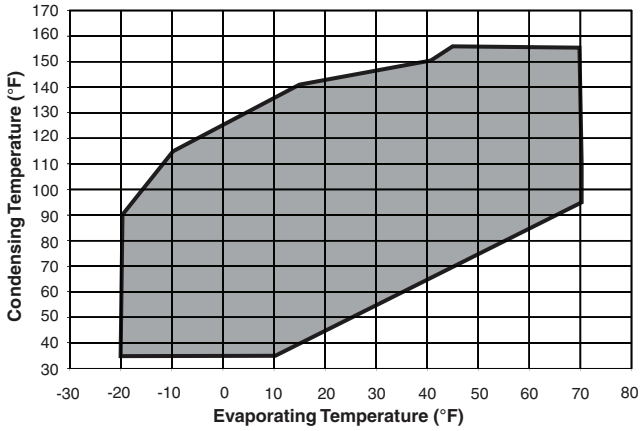

Fig. 28 — 30RAP010-090 Operating Envelope for R-410A Compressor

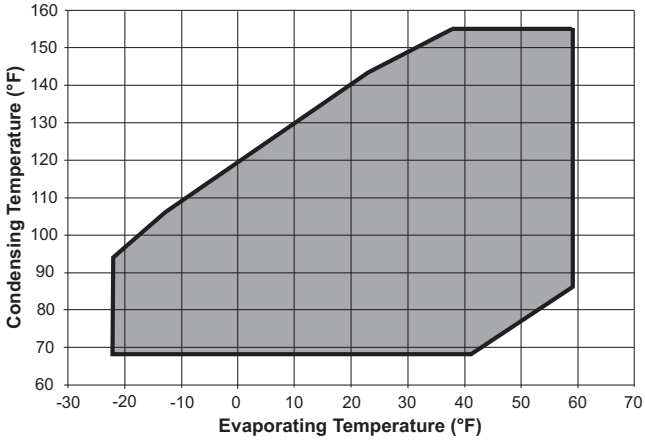

Fig. 29 — 30RAP100-150 Operating Envelope for R-410A Compressor

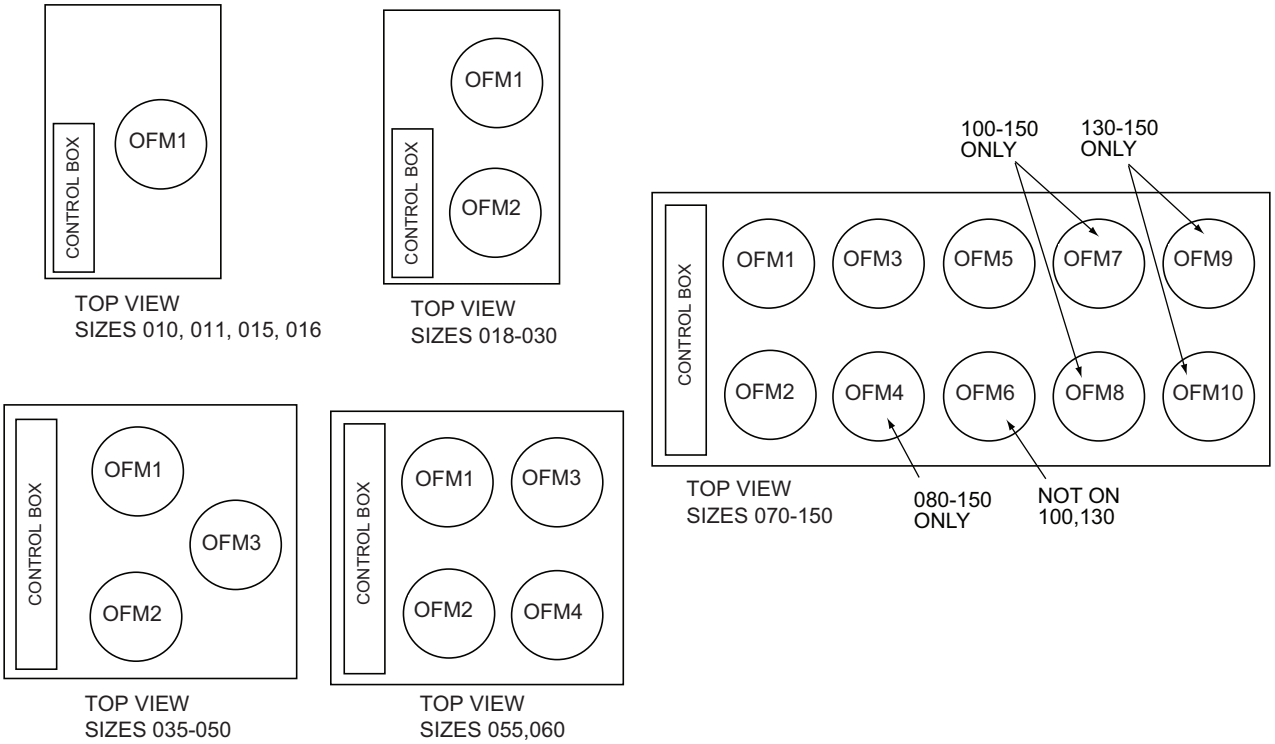

Fig. 30 — 30RAP Condenser Fan Layout

Table 14 — Fan Stages, Standard Unit

30RAP UNIT SIZE	FAN STAGES		
	FAN STAGE	CONTACTOR ENERGIZED	FANS OPERATING
010,015	STAGE 1	MMR	OFM1
018-030	STAGE 1 STAGE 2	FC1 FC1,2	OFM1 OFM1,2
035-050	STAGE 1 STAGE 2 STAGE 3	FC1 FC2 FC1,2	OFM3 OFM1,2 OFM1,2,3
055,060	STAGE 1 STAGE 2 STAGE 3 STAGE 4	FC3 FC1,3 FC3,2 FC1,2,3	OFM4 OFM4,3 OFM4,1,2 OFM1,2,3,4
070	STAGE 1 (CKT A) STAGE 2 (CKT A) STAGE 1 (CKT B) STAGE 2 (CKT B) STAGE 3 (CKT B)	FC1 FC1,3 FC2 FC2,4 FC2,4,5	OFM5 OFM5,6 OFM1 OFM1,3 OFM1,3,2
080-090 (PSN 2214)	STAGE 1 (CKT A) STAGE 2 (CKT A) STAGE 3 (CKT A) STAGE 4 (CKT A) STAGE 5 (CKT A) STAGE 6 (CKT A) STAGE 1 (CKT B) STAGE 2 (CKT B) STAGE 3 (CKT B) STAGE 4 (CKT B) STAGE 5 (CKT B) STAGE 6 (CKT B)	FC4 FC1 FC1,4 FC3,4 FC1,3 FC1,3,4 FC4 FC2 FC2,4 FC3,4 FC2,3 FC2,3,4	OFM3 OFM5 OFM3,5 OFM2,3,4,6 OFM2,5,4,6 OFM2,3,4,5,6 OFM3 OFM1 OFM1,3 OFM2,3,4,6 OFM1,2,4,6 OFM1,2,3,4,6
080-090 (SSN 2214)	STAGE 1 (CKT A) STAGE 2 (CKT A) STAGE 3 (CKT A) STAGE 4 (CKT A) STAGE 1 (CKT B) STAGE 2 (CKT B) STAGE 3 (CKT B) STAGE 4 (CKT B)	FC1 FC1,6 FC1,6,3 FC1,6,3,4 FC2 FC2,6 FC2,6,5 FC2,6,5,4	OFM5 OFM5,4 OFM5,4,6 OFM5,4,6,3 OFM1 OFM1,4 OFM1,4,2 OFM1,4,2,3
100	STAGE 1 (CKT A) STAGE 2 (CKT A) STAGE 3 (CKT A) STAGE 1 (CKT B) STAGE 2 (CKT B) STAGE 3 (CKT B) STAGE 4 (CKT B)	FC1 FC1,5 FC1,5,6 FC2 FC2,4 FC2,3 FC2,3,4	OFM7 OFM7,5 OFM7,5,8 OFM1 OFM1,3 OFM1,2,4 ORM1,2,3,4
115	STAGE 1 (CKT A) STAGE 2 (CKT A) STAGE 3 (CKT A) STAGE 4 (CKT A) STAGE 1 (CKT B) STAGE 2 (CKT B) STAGE 3 (CKT B) STAGE 4 (CKT B)	FC1 FC1,5 FC1,6 FC1,5,6 FC2 FC2,4 FC2,3 FC2,3,4	OFM7 OFM7,5 OFM7,6,8 OFM7,5,6,8 OFM1 OFM1,3 OFM1,2,4 OFM1,2,3,4
130	STAGE 1 (CKT A) STAGE 2 (CKT A) STAGE 3 (CKT A) STAGE 4 (CKT A) STAGE 1 (CKT B) STAGE 2 (CKT B) STAGE 3 (CKT B) STAGE 4 (CKT B) STAGE 5 (CKT B)	FC1 FC1,5 FC1,6 FC1,6,5 FC2 FC2,4 FC2,4,7 FC2,7,3 FC2,7,3,4	OFM9 OFM9,7 OFM9,8,10 OFM9,8,10,7 OFM1 OFM1,3 OFM1,3,5 OFM1,5,2,4 OFM1,5,2,4,3
150	STAGE 1 (CKT A) STAGE 2 (CKT A) STAGE 3 (CKT A) STAGE 4 (CKT A) STAGE 5 (CKT A) STAGE 6 (CKT A) STAGE 1 (CKT B) STAGE 2 (CKT B) STAGE 3 (CKT B) STAGE 4 (CKT B) STAGE 5 (CKT B) STAGE 6 (CKT B)	FC1 FC1,8 FC1,8,5 FC1,8,6 FC1,8,6,7 FC1,8,6,7,5 FC2 FC2,8 FC2,8,4 FC2,8,3 FC2,8,3,7 FC2,8,3,7,4	OFM9 OFM9,6 OFM9,6,7 OFM9,6,8,10 OFM9,6,8,10,5 OFM9,6,8,10,5,7 OFM1 OFM1,6 OFM1,6,3 OFM1,6,2,4 OFM1,6,2,4,5 OFM1,6,2,4,5,3

LEGEND

PSN — Prior serial number
SSN — Start serial number

MOTORMASTER® V OPTION — The Motormaster V controller is standard on 30RAP010 and 015 size units. For all other standard (non-Greenspeed/HEVCF) units that need low-ambient operation, the lead fan on a circuit can be equipped with the Motormaster V head pressure controller option or accessory. The controller is energized with the first fan stage and adjusts fan speed to maintain a SCT of 72 F (22.2 C). The first stage of fan operation is controlled by the Motormaster V controller. Refer to Fig. 30 for condenser fan layout information. The Motormaster is configured in Motormaster Select (***Configuration→MM→MMR.S*=1**(LOW AMBIENT)).

High-Efficiency Variable Condenser Fans (HEVCF) (30RAP011-060 with Greenspeed® Intelligence) — This option controls the speed of all fans for improvement in part load efficiency and sound levels. All fans run at the same speed. HEVCF is standard on 30RAP011 and 016 size units; it is not available on sizes 30RAP010 and 015. HEVCF is configured in Motormaster Select (***Configuration→MM→MMR.S*=2**(GREENSPEED)).

For the HEVCF option, the following parameters should also be configured from the factory exactly as shown in Table 15.

Table 15 — HECVF Configuration

Unit Voltage	Volts (Configuration→Unit→VLTS)
575-3-60	575
380-3-60	380
208/230-3-60	208 or 230
460-3-60	460
380/415-3-50	400
Unit Fan Type	Fan Poles (Configuration→Unit→F.POL)
Low Sound Fan	8
Metal Fan	6

FAN DRIVE OPERATION — The HEVCF option uses Danfoss VLT 102 variable frequency drives. Drives are connected to the LEN communication bus. Fan speed is determined by the chiller controller and communicated to the drive. The drive must be set at Auto On mode.

Fan speed is controlled to maintain SCT set point. The set point is calculated from conditions and adjusted to the most efficient operating point.

Drive parameters are set by the chiller control each time the unit power is cycled with the exception of the drive address. The drive address is set at the factory to 184 at Drive Parameter 8-31, but will have to be configured in case of drive replacement. If the drive address is not set correctly, the control would display Alarm A179.

The address is configured using the display on the drive. See drive manual for detailed instructions. Once the address is set, the power is cycled to reset all other parameters in the drive. Other parameters are listed in Tables 16 and 17 for reference. Drive must be in "Auto" mode to operate. Push the "Auto" button at the bottom of the drive; the light above it will be on.

The drive front cover is secured by a T-20 screw; the nominal torque is 18 inch-pounds (2 N•m). Refer to the power and control wiring diagrams for all wiring requirements. Note the shield from the LEN cable shall be attached to VFD ground.

Fan motor troubleshooting should be done at the main control box. Disconnect power from unit. All fan motors are connected to Terminal Block 2. Disconnect each fan cable and check resistance of motor. An open or short reading between phases or a phase and ground could signify a failed fan motor. Verify reading at motor before replacing. Reconnect wires using label coding L1, L2, and L3. Replace main control box cover, and power up the unit to test fan operation.

Drive alarms are shown on the chiller controls as A179, A412, and A413. Refer to Alarms and Alerts section starting on page 92 for a complete list of alarms and the common alarms with possible causes. For more details see the drive manual supplied with the chiller.

Drives and motors are protected by fuses for short circuit protection. See the Service Test section for details. Fan motor overload protection is provided by an overload device internal to the motor. The motor overload responds to a combination of temperature and current. On overload condition, the device breaks all 3 phases to the motor. It will reset automatically once the motor temperature cools.

Table 16 — High-Efficiency Fan Drive Parameters

Parameter	Description	Setting
0-02	Motor Speed Unit	1 = Hz
1-03	Torque characteristic	1 = Variable Torque
1-73	Flying Restart	1 = Yes
1-80	Function at Stop	0 = Coast
1-90	Motor Temp Protection	0 = No
1-91	Motor External Fan	0 = No
1-93	Thermistor SRC	0 = No
3-02	Min Reference [Hz]	1
3-03	Max Reference [Hz]	60
3-13	Type Reference	0
3-15	SRC REF#1	1 = AI#53
3-16	SRC REF#2	0 = No
3-41	Ramp Up	10 = 10s
3-42	Ramp Down	10 = 10s
4-10	Motor Speed Direction	2 = Both
4-12	Motor Speed Low Limit [Hz]	5
4-14	Motor Speed High Limit [Hz]	61
4-16	Torque Limit [%]	150
4-18	Current Limit [%]	110
4-19	Max Output [Hz]	61
5-12	Digital Input 27	0 = No Operation
14-01	Switching Frequency [4KHz]	6 = 4KHz
14-03	OverModulation	1 = Yes
14-40	VT Level Zero Mag Level	66
14-60	Function at Overtemp	1 = Derate
14-61	Function at Inverter Overload	1 = Derate
8-01	Control Site	2 = Digital and Control Word
8-02	Control Source	1 = FC port=RS485
8-03	Control Timeout	20S
8-04	Control Timeout Function	2 = Stop
8-05	Function at Timeout End	1= Resume setup
8-10	Control Profile	0=FC Profile
8-30	Protocol	20=LEN
8-31	Address	184
8-32	Baud Rate	4=38400
8-33	Parity/Stop Bit	2=No parity, 1 stop bit
8-34	Estimated Cycle Time	0 msec
8-37	Max Intercharacter delay	5 msec

Table 17 — HEVCF Parameters Reset at Chiller Power Cycle

NO. FANS	PARAMETER				
	1-20	1-22	1-23	1-24	1-25
	Motor Power (kW)	Motor Volts	Motor Frequency	Motor Amps (A)	Motor Speed (RPM)
1	2.3	208	60	6.5	1140
		380		3.9	
		460		2.9	
		575		2.4	
		400	50	2.9	950
2	4.6	208	60	13	1140
		380		7.8	
		460		5.8	
		575		4.8	
		400	50	5.8	950
3	6.9	208	60	19.5	1140
		380		11.7	
		460		8.7	
		575		7.2	
		400	50	8.7	950
4	9.2	208	60	26	1140
		380		15.6	
		460		11.6	
		575		9.6	
		400	50	11.6	950
1	1.6	208	60	6	850
		380		3.9	
		460		2.9	
		575		2.4	
		400	50	2.9	710
2	4.6	208	60	12	850
		380		7.8	
		460		5.8	
		575		4.8	
		400	50	5.8	710
3	6.9	208	60	18	850
		380		11.7	
		460		8.7	
		575		7.2	
		400	50	8.7	710
4	9.2	208	60	24	850
		380		15.6	
		460		11.6	
		575		9.6	
		400	50	11.6	710

Operation of Machine Based on Control Method and Cooling Set Point Selection Settings — Machine On/Off control is determined by the configuration of the Control Method (***Configuration→OPT2→CTRL***) and Cooling Set Point Select (***Configuration→SLCT→CLSP***) variables. All units are factory configured with Cooling Set Point Select set to 0 (single set point). With the control method set to 0, simply switching the Enable/Off/Remote Control switch to the Enable or Remote Control position (external contacts closed) will put the chiller in an occupied state. The control mode (***Operating Modes→MODE***) will be 1 (OFF LOCAL) when the switch is Off and will be 5 (ON LOCAL) when in the Enable position or Remote Control position with external contacts closed.

Two other control methods are available for Machine On/Off control:

OCCUPANCY SCHEDULE (***Configuration→OPT2→CTRL* = 2**) — The main base board will use the operating schedules as defined under the Time Clock mode in the scrolling marquee display. These schedules are identical. The schedule number must be set to 1 for local schedule.

The schedule number can be set anywhere from 65 to 99 for operation under a CCN global schedule. The Enable/Off/Remote Control switch must be in the Enable or Remote Control position. The control mode (***Operating Modes→MODE***) will be 1 when the switch is Off. The control mode will be 3 when the Enable/Off/Remote Control switch input is On and the time of day is during an unoccupied period. Similarly, the control mode will be 7 when the time of day is during an occupied period.

CCN CONTROL (***Configuration→OPT2→CTRL* = 3**) — An external CCN device such as Chillervisor System Manager controls the On/Off state of the machine. This CCN device forces the variable "CHIL_S_S" between Start/Stop to control the chiller. The control mode (***Operating Modes→MODE***) will be 1 when the Enable/Off/Remote Control switch is Off. The control mode will be 2 when the Enable/Off/Remote Control switch input is On and the CHIL_S_S variable is "Stop". Similarly, the control mode will be 6 when the CHIL_S_S variable is "Start".

Table 18 illustrates how the control method and cooling set point select variables direct the operation of the chiller and the set point to which it controls. The illustration also shows the ON/OFF state of the machine for the given combinations.

Table 18 — Control Methods and Cooling Set Points

CONTROL TYPE (CTRL)	OCCUPANCY STATE	COOLING SET POINT SELECT (CLSP)			
		0 (SINGLE)	1 (DUAL, SWITCH)	2 (DUAL, OCC)	3 (4 TO 20 MA)
0 (switch)	Occupied	ON,CSP1	ON*	ON,CSP1	ON†
	Unoccupied	ON,CSP1	ON*	ON,CSP2	ON
2 (Occupancy)	Occupied	ON,CSP1	ON*	Illegal	ON†
	Unoccupied	OFF	OFF	Illegal	OFF
3 (CCN)	Occupied	ON,CSP1	ON*	ON,CSP1	ON†
	Unoccupied	ON,CSP1	ON*	ON,CSP2	ON†

*Dual set point switch input used. CSP1 used when switch input is open. CSP2 used when switch input is closed.
†Cooling set point determined from 4 to 20 mA input to energy management module (EMM) to terminals LVT-10,8.

Cooling Set Point Select — Table 19 lists cooling set point limits.

Table 19 — Cooling Set Point Limits

SET POINT LIMIT	COOLER FLUID TYPE, *FLUD*	
	1 = WATER	2 = MEDIUM BRINE
MINIMUM	40 F (4.4 C)	14 F (–10.0 C)
MAXIMUM	70 F (21.1 C)	

SINGLE — Unit operation is based on Cooling Set Point 1 (***Set Points→COOL→CSP.1***).

DUAL SWITCH — Unit operation is based on Cooling Set Point 1 (***Set Points→COOL→CSP.1***) when the Dual Set Point switch contacts are open and Cooling Set Point 2 (***Set Points→COOL→CSP.2***) when they are closed.

DUAL CCN OCCUPIED — Unit operation is based on Cooling Set Point 1 (***Set Points→COOL→CSP.1***) during the Occupied mode and Cooling Set Point 2 (***Set Points→COOL→CSP.2***) during the Unoccupied mode as configured under the local occupancy schedule accessible only from CCN. Schedule Number in Table SCHEDOVR (See Appendix B) must be configured to 1. If the Schedule Number is set to 0, the unit will operate in a continuous 24-hr Occupied mode. Control method must be configured to 0 (switch). See Table 18.

4 TO 20 mA INPUT — Unit operation is based on an external 4 to 20 mA signal input to the Energy Management Module (EMM). Refer to page 31.

CONFIGURATION SET POINT LIMITS — Table 20 lists configuration set point limits.

Table 20 — Configuration Set Point Limits

SET POINT LIMIT	COOLER FLUID TYPE (FLUD)	
	1 = WATER	2 = BRINE
MINIMUM	40 F (4.4 C)	14 F (–10.0 C)
MAXIMUM	60 F (15.5 C)	

Ice Mode — When Ice Mode is enabled ***(Configuration→OPT2→ICE.M)***, Cooling Setpoint Select ***(Configuration→SLCT→CLSP)*** must be set to Dual Switch or Dual CCN Occupied. The Energy Management Module (EMM) must be installed. Unit operation is based on Cooling Setpoint 1 (***CSP.1***) during the Occupied mode, Ice Setpoint (***CSP.3***) during the Unoccupied mode with the Ice Done contacts open, and Cooling Setpoint 2 (***CSP.2***) during the Unoccupied mode with the Ice Done contacts closed. These 3 set points can be utilized to develop your specific control strategy.

Cooling Set Point (4 to 20 mA) — A field supplied and generated, externally powered 4 to 20 mA signal input to the Energy Management Module (EMM) can be used to provide the leaving fluid temperature set point. Connect the signal to LVT10,8 (+,–). Figure 31 shows how the 4 to 20 mA signal is linearly calculated on an overall 10 F to 80 F (–12.2 to 26.7 C) range for fluid types (***Configuration→OPT1→FLUD***) 1 or 2. The set point will be limited by the fluid (***FLUD***) type. Be sure that the chilled water loop is protected at the lowest temperature. See Table 21.

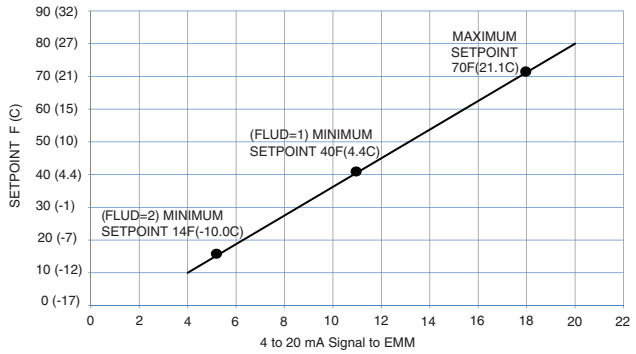

EMM — Energy Management Module

Fig. 31 — Cooling Set Point (4 to 20 mA)

Table 21 — Menu Configuration of 4 to 20 mA Cooling Set Point Control

MODE (RED LED)	KEYPAD ENTRY	SUB-MODE	KEYPAD ENTRY	ITEM	DISPLAY	ITEM EXPANSION	COMMENT
CONFIGURATION	ENTER	DISP					
	▼	UNIT					
	▼	OPT1					
	▼	OPT2					
	▼	HP.A					
	▼	HP.B					
	▼	EXV.A					
	▼	EXV.B					
	▼	M.MST					
	▼	RSET					
	▼	DMDC					
	▼	SLCT	ENTER	CLSP	0	COOLING SETPOINT SELECT	
			ENTER		0		Scrolling Stops
			ENTER		0		Flashing “0”
			▲		3		Select “3”
			ENTER		3		Change Accepted

Low Sound Mode Operation — All models are factory configured with the Low Sound Mode disabled. In the Configuration mode under sub-mode OPT2, items for Low Sound Mode Select (***Configuration→OPT2→LS.MD***), Low Sound Start Time (***Configuration→OPT2→LS.ST***), Low Sound End Time (***Configuration→OPT2→LS.ND***) and Low Sound Capacity Limit (***Configuration→OPT2→LS.LT***) are factory configured so that the chiller always runs as quietly as possible. This results in operation at increased saturated condensing temperature. As a result, some models may not be able to achieve rated efficiency. For chiller operation at rated efficiency, disable the low sound mode or adjust the low sound mode start and stop times accordingly or set both times to 00:00 for rated efficiency operation 24 hours per day. In addition, the low sound capacity limit can be used to reduce overall chiller capacity, if required, by limiting the maximum to a user-configured percentage.

Heating Operation — The chiller can be used for pump outputs or optional factory-installed hydronic system operation can be utilized for heating applications. The heating mode is activated when the control sees a field-supplied closed switch input to terminal block LVT-19,20. The control locks out cooling when the heat relay input is seen. A field-supplied boiler relay connection is made using heat relay and alarm relay contacts. Factory-installed “BOILER” connections exist in the control panel near LVT for these applications. Alarms and alerts A189 through A202 are active during heating operation.

Service Test — *Both main power and control circuit power must be on*.

The Service Test function should be used to verify proper operation of condenser fan(s), compressors, minimum load valve solenoid (if installed), cooler pump(s), EXVs, and remote alarm relay. To use the Service Test mode, the Enable/Off/Remote Control switch must be in the Off position. Use the Service Test Mode and Sub-Mode Directory table in Appendix A to enter the mode and display TEST. Press ENTER twice so that Off flashes. Enter the password if required. Use either arrow key to change the TEST value to the ON position and press ENTER. Press ESCAPE and the ▼ button to enter the OUTS or COMP sub-mode.

Test the condenser fans, cooler pump(s), and alarm relay by changing the item values from OFF to ON. These discrete outputs are then turned off if there is no keypad activity for 10 minutes. Use the arrow keys to select the desired percentage when testing expansion valves and Motormaster® V controller. When testing compressors, lead compressor must be started first. All compressor outputs can be turned on, but the control will limit the rate by staging one compressor per minute. Compressor unloaders and hot gas bypass relays/solenoids (if installed) can be tested with the compressors on or off. The relays under the COMP mode will stay on for 10 minutes if there is no keypad activity. Compressors will stay on until they are turned off by the operator. The Service Test mode will remain enabled for as long as there is one or more compressors running. All safeties are monitored during this test and will turn a compressor, a circuit, or the machine off if required. Any other mode or sub-mode can be accessed, viewed, or changed during the TEST mode. The MODE item (***Run Status→VIEW***) will display “0” as long as the Service mode is enabled. The TEST sub-mode value must be changed back to OFF before the chiller can be switched to Enable or Remote Control for normal operation.

The pump(s) in the hydronic package come factory pre-wired into the main unit power supply/starter. In order to check proper pump rotation, use the Service Test function to test the condenser fans and observe them for proper rotation. If fans turn correctly, the pumps will rotate correctly. Clockwise rotation of the pump motor cooling fans can also be used to determine that pumps are rotating correctly.

Use Service Test function to test operation of pumps. Verify that the flow switch input is made when the pump is running. For dual pump hydronic systems, the control only uses one pump at a time. Consult the Installation Instructions supplied with this chiller and use the circuit setter balancing valve installed in hydronic package to adjust fluid flow rate.

Optional Factory-Installed Hydronic Package — If the chiller has factory-installed chilled fluid pumps, specific steps should be followed for proper operation.

Cooler Pump Control — The AquaSnap® 30RAP machines equipped with a factory-installed pump package are configured with the Cooler Pump Control (***Configuration→OPT1→CPC***) = ON.

Machines not equipped with a pump package are configured with the cooler pump control OFF. It is recommended that the machine control the chilled water pump. If not, a 5-minute time delay is required after command to shut machine down is sent before chilled water pump is turned off. This is required to maintain water flow during shutdown period of the machine.

With or without this option enabled, the cooler pump relay will be energized when the machine enters an ON status (i.e., On Local, On CCN, On Time). An A207 — Cooler Freeze Protection Alarm will energize the cooler pump relay also, as an override. The cooler pump relay will remain energized if the machine is in MODE 10 – Minimum Off Time.

Cooler Pump Operation — Two options of pump operation are available with 30RAP units (***Configuration→OPT1→PMP.O***).

The factory default for ***PMP.O*** is 0 (Auto) for automatic. In this mode, the pump will be energized any time the unit is enabled, or for a freeze condition. The pump will be de-energized in any alarm other than A207 – Cooler Freeze Protection alarm.

If ***PMP.O*** is set to 1 (Continuous), the chilled water pump will be energized any time the unit is enabled. If the unit is in an alarm condition, the pump will remain energized. Because of this feature, a High Temperature Cut-Off variable, C***onfiguration→OPT1→PM.HT*** has been added for field configuration. If the leaving chilled water temperature exceeds the configured value, the pump will shut off to avoid overheating the chilled loop. The factory default is 95 F (35 C) and has a range of 95 to 125 F (35 to 52 C). This variable is only active when ***PMP.O*** is set to 1.

Cooler Pump Sequence of Operation — At any time the unit is in an ON status, as defined by the one of the following conditions, the cooler pump relay will be enabled.

1. Enable-Off-Remote Switch in ENABLE, (***CTRL*=0**).
2. Enable-Off-Remote Switch in REMOTE with a Start-Stop Remote Control closure (***CTRL*=0**).
3. An Occupied Time Period from an Occupancy Schedule in combination with items 1 or 2 (***CTRL*=2**).
4. A CCN Start-Stop Command to Start in combination with items 1 or 2 (***CTRL*=3**).

As stated before, there are certain alarm conditions and Operating Modes that will turn the cooler pump relay ON. This sequence will describe the normal operation of the pump control algorithm.

When the unit cycles from an "On" state to an "Off" state, the cooler pump output will remain energized for the Cooler Pump Shutdown Delay (***Configuration→OPT1→PM.DY***). This is configurable from 0 to 10 minutes. The factory default is 1 minute.

NO INTEGRAL PUMP — SINGLE EXTERNAL PUMP CONTROL — With a single external pump, the following options must be configured:

- Cooler Pump Control (***Configuration→OPT1→CPC***) = **OFF**.
- Cooler Pump 1 Enable (***Configuration→OPT1→PM1E***) = **NO**.
- Cooler Pump 2 Enable (***Configuration→OPT1→PM2E***) = **NO**.

The maximum load allowed for the Chilled Water Pump Starter is 5 VA sealed, 10 VA inrush at 24 volts. The starter coil is powered from the chiller control system. The starter should be wired between LVT-25 and LVT-21. If equipped, the field-installed chilled water pump starter auxiliary contacts should be connected in series with the chilled water flow switch.

The Cooler Pump Relay will be energized when the machine is "On." The chilled water pump interlock circuit consists of a chilled water flow switch and a field-installed chilled water pump interlock. If the chilled water pump interlock circuit does not close within five (5) minutes of starting, an A200 — Cooler Flow/Interlock Failed to Close at Start-Up Alarm will be generated and chiller will not be allowed to start.

If the chilled water pump interlock or chilled water flow switch opens for at least three (3) seconds after initially being closed, an A201 — Cooler Flow/Interlock Contacts Opened During Normal Operation Alarm will be generated and the machine will stop.

NO INTEGRAL PUMP — DUAL EXTERNAL PUMP CONTROL — With two external pumps, the following options must be configured:

- Cooler Pump Control (***Configuration→OPT1→CPC***) = **ON**.
- Cooler Pump 1 Enable (***Configuration→OPT1→PM1E***) = **YES**.
- Cooler Pump 2 Enable (***Configuration→OPT1→PM2E***) = **YES**.

The maximum load allowed for the Chilled Water Pump Starters is 5 VA sealed, 10 VA inrush at 24 volts. The starter coil is powered from the chiller control system. The starter for Chilled Water Pump 1 should be wired between LVT-25 and LVT-21. The starter for Chilled Water Pump 2 should be wired between LVT-24 and LVT-21. A field-installed chilled water pump interlock for each pump must be connected to each pump's interlock points on the main base board. The chilled water pump 1 interlock, CWP1, must be connected to MBB-J7-1 and -2. The chilled water pump 2 interlock, CWP2, must be connected to MBB-J7-3 and -4. The chilled water pump interlock contacts should be rated for dry circuit application capable of handling 5 vdc at 2 mA.

SINGLE INTEGRAL PUMP CONTROL — With a single pump, the following options must be configured:

- Cooler Pump Control (***Configuration→OPT1→CPC***) = **ON**.
- Cooler Pump 1 Enable (***Configuration→OPT1→PM1E***) = **YES**.
- Cooler Pump 2 Enable (***Configuration→OPT1→PM2E***) = **NO**.

With a single integral pump, the Cooler Pump Starter will be energized when the machine is occupied. As part of the factory-installed package, an auxiliary set of contacts is wired to the MBB to serve as Chilled Water Pump Interlock. When the mechanical cooling is called for, the pump interlock and flow switch is checked. If the circuits are closed, the machine starts its capacity routine. If the auxiliary contact interlock does not close within 25 seconds of the ON command, a T190 — Cooler Pump 1 Aux Contacts Failed to Close at Start-Up Alert will be generated and the pump shut down. The unit will not be allowed to start. If the chilled water flow switch does not close within one (1) minute, two alarms will be generated. A T192 — Cooler Pump 1 Failed to Provide Flow at Start-Up Alert and an A200 — Cooler Flow/Interlock Failed to Close at Start-Up Alarm will be generated and chiller will not be allowed to start.

If the chilled water flow switch opens for at least 3 seconds after initially being closed, a T196 — Flow Lost While Pump 1 Running Alert and an A201 — Cooler Flow/Interlock Contacts Opened During Normal Operation Alarm will be generated and the machine will stop.

If the control detects the chilled water pump interlock open for 25 seconds after initially being closed, a T194 — Cooler

Pump 1 Contacts Opened During Normal Operation Alert is generated and the unit is shut down.

If the control detects the chilled water flow switch circuit closed for at least 5 minutes with the pump output OFF, an A202 — Cooler Pump Interlock Closed When Pump is Off Alarm will be generated and the unit will not be allowed to start.

If the control detects that the chilled water pump auxiliary contacts are closed for at least 25 seconds while the pump is OFF, a T198 — Cooler Pump 1 Aux Contacts Closed While Pump Off Alert is generated. The chiller will not be allowed to start.

If the control starts a pump and the wrong interlock circuit closes for at least 20 seconds, an A189 — Cooler Pump and Aux Contact Input Miswire Alarm will be generated. The unit will be prevented from starting.

As part of a pump maintenance routine, the pump can be started to maintain lubrication of the pump seal. To utilize this function, Cooler Pmp Periodic Start (***Configuration→OPT1→PM.P.S***) must be set to YES. This option is set to NO as the factory default. With this feature enabled, if the pump is not operating, it will be started and operated for 2 seconds starting at 14:00 hours. If the pump is operating, this routine is skipped. If the pump has failed and an Alarm/Alert condition is active, the pump will not start that day.

DUAL INTEGRAL PUMP CONTROL — With a dual integral pump package, the following options must be configured:

- Cooler Pump Control (***Configuration→OPT1→CPC***) = **ON**.
- Cooler Pump 1 Enable (***Configuration→OPT1→PM1E***) = **YES**.
- Cooler Pump 2 Enable (***Configuration→OPT1→PM2E***) = **YES**.

Pump Start Selection is a field-configurable choice. Cooler Pump Select (***Configuration→OPT1→PM.SL***) is factory defaulted to 0 (Automatic). This value can be changed to 1 (Pump 1 Starts First) or 2 (Pump 2 Starts First). If ***PM.SL*** is 0 (Automatic), the pump selection is based on two criteria: the alert status of a pump and the operational hours on the pump. If a pump has an active Alert condition, it will not be considered for the lead pump. The pump with the lowest operational hours will be the lead pump. A pump is selected by the control to start and continues to be the lead pump until the Pump Changeover Hours (***Configuration→OPT1→PM.DT***) is reached.

The Lead Pump (***Run Status→VIEW→LD.PM***) indicates the pump that has been selected as the lead pump: 1 (Pump 1), 2 (Pump 2), 3 (No Pump). The Pump Changeover Hours is factory defaulted to 500 hours. Regardless of the Cooler Pump Selection, any pump that has an active alert will not be allowed to start.

With the dual integral pump package, the Cooler Pump Starter will be energized when the machine is in an occupied period. As part of the factory-installed package, an auxiliary set of contacts is wired to the MBB to serve as Chilled Water Pump Interlock, one set for each pump to individual channels on the MBB. With a call for mechanical cooling, the specific pump interlock and flow switch are checked. If the circuits are closed, the machine starts its capacity routine. If Pump 1 starts and the auxiliary contact interlock does not close within 25 seconds of the ON command, a T190 — Cooler Pump 1 Aux Contacts Failed to Close at Start-Up Alert will be generated and the pump shut down. The unit will not be allowed to start. If the chilled water flow switch does not close within 1 minute, two alarms will be generated. A T192 — Cooler Pump 1 Failed to Provide Flow at Start-Up Alert and an A200 — Cooler Flow/Interlock Failed to Close at Start-Up Alarm will be generated and chiller will not be allowed to start. In either fault case listed above, Pump 2 will be commanded to start once Pump 1 has failed.

If Pump 2 starts and the auxiliary contact interlock does not close within 25 seconds of the ON command, a T191 — Cooler Pump 2 Aux Contacts Failed to Close at Start-Up Alert will be generated and the pump shut down. The unit will not be allowed to start. If the chilled water flow switch does not close within one (1) minute, two alarms will be generated. A T193 — Cooler Pump 2 Failed to Provide Flow at Start-Up Alert and an A200 — Cooler Flow/Interlock Failed to Close at Start-Up Alarm will be generated and chiller will not be allowed to start. In either fault case listed above, Pump 1 will be commanded to start once Pump 2 has failed.

If the chilled water flow switch opens for at least 3 seconds after initially being closed, a T196 — Flow Lost While Pump 1 Running Alert or T197 — Flow Lost While Pump 2 Running Alert for the appropriate pump and an A201 — Cooler Flow/Interlock Contacts Opened During Normal Operation Alarm will be generated and the machine will stop. If available, the other pump will be started. If flow is proven, the machine will be allowed to restart.

If a chilled water pump interlock that opens for 25 seconds after initially being closed is detected by the control, the appropriate T194 — Cooler Pump 1 Contacts Opened During Normal Operation Alert or T195 — Cooler Pump 2 Contacts Opened During Normal Operation Alert is generated and the unit is shut down. If available, the other pump will be started. If flow is proven, the machine will be allowed to restart.

If the control detects that the chilled water flow switch circuit is closed for at least 5 minutes with the pump output OFF, an A202 — Cooler Pump Interlock Closed When Pump is Off Alarm will be generated and the unit will not be allowed to start.

If the control detects that the chilled water pump auxiliary contacts are closed for at least 25 seconds while the pump is OFF, the appropriate T198 — Cooler Pump 1 Aux Contacts Closed While Pump Off or Alert T199 — Cooler Pump 2 Aux Contacts Closed While Pump Off Alert is generated. The chiller will not be allowed to start.

If the control starts a pump and the wrong interlock circuit closes for at least 20 seconds, an A189 – Cooler Pump and Aux Contact Input Miswire Alarm will be generated. The unit will be prevented from starting.

The control will allow for pump changeover. Two methods will change the pump sequence. Before the changeover can occur, the unit must be at Capacity Stage 0. During changeover the chilled water flow switch input is ignored for 10 seconds to avoid a nuisance alarm.

With Cooler Pump Select (***Configuration→OPT1→PM.SL***) set to 0 (Automatic) and when the differential time limit Pump Changeover Hours (***Configuration→OPT1→PM.DT***) is reached, the lead pump will be turned OFF. Approximately one (1) second later, the lag pump will start. Manual changeover can be accomplished by changing Rotate Cooler Pump Now (***Configuration→OPT1→ROT.P***) to YES only if the machine is at Capacity Stage 0 and the differential time limit Pump Changeover Hours (***PM.DT***) is reached. If the ***PM.DT*** is not satisfied, the changeover will not occur. With the machine at Capacity Stage 0, the pumps would rotate automatically as part of the normal routine.

With Cooler Pump Select (***PM.SL***) set to 1 (Pump 1 Starts First) or 2 (Pump 2 Starts First), a manual changeover can be accomplished by changing ***PM.SL*** only. The machine Remote-Off-Enable Switch must be in the OFF position to change this variable. The Rotate Cooler Pump Now (***ROT.P***) feature does not work for these configuration options.

As part of a pump maintenance routine, the pumps can be started to maintain lubrication to the pump seal. To utilize this function, Cooler Pmp Periodic Start (***Configuration→OPT1→PM.PS***) must be set to YES. This option is set to NO as the factory default. If feature is enabled and the pump(s) are not

operating, then the pumps will be operated every other day for 2 seconds starting at 14:00 hours. If a pump has failed and has an active Alert condition, it will not be started that day.

Configuring and Operating Dual Chiller Control — The dual chiller routine is available for the control of two units supplying chilled fluid on a common loop. This control algorithm is designed for parallel fluid flow arrangement only. One chiller must be configured as the master chiller, the other as the slave. An additional leaving fluid temperature thermistor (Dual Chiller LWT) must be installed as shown in Fig. 32 and 33 and connected to the master chiller. Refer to Sensors section, page 29, for wiring. The CCN communication bus must be connected between the two chillers. Connections can be made to the CCN screw terminals on LVT. Refer to Carrier Comfort Network® Interface section, page 29, for wiring information. Configuration examples are shown in Tables 22 and 23.

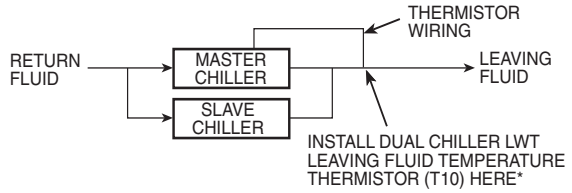

*Depending on piping sizes, use either:
- HH79NZ014 sensor/10HB50106801 well (3-in. sensor/well)
- HH79NZ029 sensor/10HB50106802 well (4-in. sensor/well)

Fig. 32 — Dual Chiller Thermistor Location

PART NUMBER	DIMENSIONS IN. (MM)	
	A	B
10HB50106801	3.10 (78.7)	1.55 (39.4)
10HB50106802	4.10 (104.1)	1.28 (32.5)

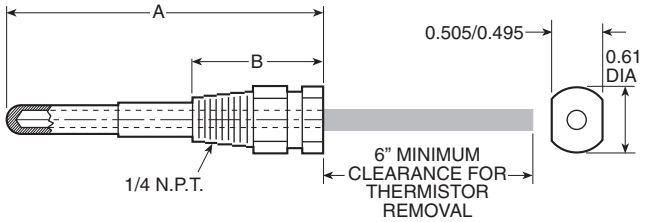

Fig. 33 — Dual Leaving Water Thermistor Well

Refer to Tables 22 and 23 for dual chiller configuration. In this example the master chiller will be configured at address 1 and the slave chiller at address 2. The master and slave chillers must reside on the same CCN bus (***Configuration→CCN→CCNB***) but cannot have the same CCN address (***Configuration→CCN→CCNA***). Both master and slave chillers must have Lead/Lag Chiller Enable (***Configuration→RSET→LLEN***) configured to ENBL. Master/Slave Select (***Configuration→RSET→MSSL***) must be configured to MAST for the master chiller and SLVE for the slave. Also in this example, the master chiller will be configured to use Lead/Lag Balance Select (***Configuration→RSET→LLBL***) and Lead/Lag Balance Delta (***Configuration→RSET→LLBD***) to even out the chiller run-times weekly. The Lag Start Delay (***Configuration→RSET→LLDY***) feature will be set to 10 minutes. This will prevent the lag chiller from starting until the lead chiller has been at 100% capacity for the length of the delay time. Parallel configuration (***Configuration→RSET→PARA***) can only be configured to YES. The variables ***LLBL***, ***LLBD***, and ***LLDY*** are not used by the slave chiller.

Dual chiller start/stop control is determined by configuration of Control Method (***Configuration→OPT1→CTRL***) of the Master chiller. The Slave chiller should always be configured for ***CTRL*=0** (Switch). If the chillers are to be controlled by Remote Controls, both Master and Slave chillers should be enabled together. Two separate relays or one relay with two sets of contacts may control the chillers. The Enable/Off/Remote Control switch should be in the Remote Control position on both the Master and Slave chillers. The Enable/Off/Remote Control switch should be in the Enable position for ***CTRL*=2** (Occupancy) or ***CTRL*=3** (CCN Control).

Both chillers will stop if the Master chiller Enable/Off/Remote Control switch is in the Off position. If the Emergency Stop switch is turned off or an alarm is generated on the Master chiller the Slave chiller will operate in a Stand-Alone mode. If the Emergency Stop switch is turned off or an alarm is generated on the Slave chiller the Master chiller will operate in a Stand-Alone mode.

The master chiller controls the slave chiller by changing its Control Mode (***Run Status→VIEW→STAT***) and its operating setpoint or Control Point (***Run Status→VIEW→CT.PT***).

Temperature Reset — The control system is capable of handling leaving-fluid temperature reset based on return cooler fluid temperature. Because change in temperature through the cooler is a measure of the building load, the return temperature reset is in effect an average building load reset method. The control system is also capable of temperature reset based on outdoor-air temperature (OAT), on space temperature (SPT), or from an externally powered 4 to 20 mA signal. Accessory sensors must be used for SPT reset (33ZCT55SPT). The energy management module (EMM) must be used for temperature reset using a 4 to 20 mA signal. See Table 24.

IMPORTANT: Care should be taken when interfacing with other control systems due to possible power supply differences: full wave bridge versus half wave rectification. Connection of control devices with different power supplies may result in permanent damage. *Comfort*Link controls incorporate power supplies with half wave rectification. A signal isolation device should be utilized if the signal generator incorporates a full wave bridge rectifier.

Table 22 — Dual Chiller Configuration (Master Chiller Example)

SUB-MODE	ITEM	KEYPAD ENTRY	DISPLAY	ITEM EXPANSION	COMMENTS
DISP					
UNIT					
OPT1					
OPT2		ENTER	CTRL	CONTROL METHOD	
	CTRL	ENTER	0	SWITCH	DEFAULT 0
		ESCAPE	OPT2		
CCN		↓	CCN		
	CCNA	ENTER	1	CCN ADDRESS	DEFAULT 1
		↓	CCNB		
	CCNB	ENTER	0	CCN BUS NUMBER	DEFAULT 0
		ESCAPE	CCN		
		↓	RSET		PROCEED TO SUBMODE **RESET**

Table 22 — Dual Chiller Configuration (Master Chiller Example) (cont)

SUB-MODE	ITEM	KEYPAD ENTRY	DISPLAY	ITEM EXPANSION	COMMENTS
		ENTER	CRST	COOLING RESET TYPE	
		↓	LLEN	LEAD/LAG CHILLER ENABLE	↓ 15 ITEMS
	LLEN	ENTER	DSBL		SCROLLING STOPS
		ENTER	DSBL		VALUE FLASHES
		↑	ENBL		SELECT ENBL
	LLEN	ENTER	ENBL	LEAD/LAG CHILLER ENABLE	CHANGE ACCEPTED
		ESCAPE	LLEN		
		↓	MSSL	MASTER /SLAVE SELECT	
	MSSL	ENTER	MAST	MASTER /SLAVE SELECT	DEFAULT MAST
		ESCAPE	MSSL		
		↓	SLVA	SLAVE ADDRESS	
	SLVA	ENTER	0		SCROLLING STOPS
		ENTER	0		VALUE FLASHES
		↑	2		SELECT 2
	SLVA	ENTER	2	SLAVE ADDRESS	CHANGE ACCEPTED
		ESCAPE	SLVA		
RSET		↓	LLBL	LEAD/LAG BALANCE SELECT	
	LLBL	ENTER	0		SCROLLING STOPS
		ENTER	0		VALUE FLASHES
		↑	2		SELECT 2 - Automatic
	LLBL	ENTER	2	LEAD/LAG BALANCE SELECT	CHANGE ACCEPTED
		ESCAPE	LLBL		
		↓	LLBD	LEAD/LAG BALANCE DELTA	
	LLBD	ENTER	168	LEAD/LAG BALANCE DELTA	DEFAULT 168
		ESCAPE	LLBD		
		↓	LLDY	LAG START DELAY	
	LLDY	ENTER	5		SCROLLING STOPS
		ENTER	5		VALUE FLASHES
		↑	10		SELECT 10
	LLDY	ENTER	10	LAG START DELAY	CHANGE ACCEPTED
		ESCAPE	LLDY		
		ESCAPE	RSET		
	PARA	ENTER	YES		MASTER COMPLETE

NOTES:
1. Master Control Method (CTRL) can be configured as 0-Switch, 2-Occupancy or 3-CCN.
2. Parallel Configuration (PARA) cannot be changed.

Table 23 — Dual Chiller Configuration (Slave Chiller Example)

SUB-MODE	ITEM	KEYPAD ENTRY	DISPLAY	ITEM EXPANSION	COMMENTS
DISP					
UNIT					
OPT1					
OPT2		ENTER	CTRL	CONTROL METHOD	
	CTRL		0	SWITCH	DEFAULT 0 (SEE NOTE 1)
		ESCAPE	OPT2		
CCN		↓	CCN		
		↓	CCNA		
	CCNA	ENTER	1	CCN ADDRESS	SCROLLING STOPS
		ENTER	1		VALUE FLASHES
		↑	2		SELECT 2 (SEE NOTE 2)
	CCNA	ENTER	2	CCN ADDRESS	CHANGE ACCEPTED
		ESCAPE	CCN		
	CCNB	ENTER	0	CCN BUS NUMBER	DEFAULT 0 (SEE NOTE 3)
		ESCAPE	CCN		
		↓	RSET		PROCEED TO SUBMODE **RSET**
RSET		ENTER	CRST	COOLING RESET TYPE	
		↓	LLEN	LEAD/LAG CHILLER ENABLE	↓ 15 ITEMS
	LLEN	ENTER	DSBL		SCROLLING STOPS
		ENTER	DSBL		VALUE FLASHES
		↑	ENBL		SELECT ENBL
	LLEN	ENTER	ENBL	LEAD/LAG CHILLER ENABLE	CHANGE ACCEPTED
		ESCAPE	LLEN		
		↓	MSSL	MASTER /SLAVE SELECT	
	MSSL	ENTER	MAST		SCROLLING STOPS
		ENTER	MAST		VALUE FLASHES
		↑	SLVE		SELECT SLVE
	MSSL	ENTER	SLVE	MASTER /SLAVE SELECT	CHANGE ACCEPTED
		ESCAPE	MSSL		
		ESCAPE	RSET		SLAVE COMPLETE (SEE NOTE 4)

NOTES:
1. Slave Control Method (CTRL) must be configured for 0.
2. Slave CCN Address (CCNA) must be different than Master.
3. Slave CCN Bus Number (CCNB) must be the same as Master.
4. Slave does not require SLVA, LLBL, LLBD, or LLDY to be configured.

To use outdoor air or space temperature reset, four variables must be configured. In the Configuration mode under the sub-mode RSET, items (***Configuration→RSET→CRST***), (***Configuration→RSET→RM.NO***), (***Configuration→RSET→RM.F***), and (***Configuration→RSET→RT.DG***) must be properly set. See Table 25. The outdoor air reset example provides 0° F (0° C) chilled water set point reset at 85.0 F (29.4 C) outdoor-air temperature and 15.0 F (8.3 C) reset at 55.0 F (12.8 C) outdoor-air temperature. The space temperature reset example provides 0° F (0° C) chilled water set point reset at 72.0 F (22.2 C) space temperature and 6.0 F (3.3 C) reset at 68.0 F (20.0 C) space temperature. The variable ***CRST*** should be configured for the type of reset desired. The variable ***RM.NO*** should be set to the temperature that no reset should occur. The variable ***RM.F*** should be set to the temperature that maximum reset is to occur. The variable ***RM.DG*** should be set to the maximum amount of reset desired.

To use return reset, four variables must be configured. In the Configuration mode under the sub-mode ***RSET***, items ***CRST***, ***RT.NO***, ***RT.F*** and ***RT.DG*** must be properly set. See Table 26. This example provides 5.0 F (2.8 C) chilled water set point reset at 2.0 F (1.1 C) cooler ΔT and 0° F (0° C) reset at 10.0 F (5.6 C) cooler ΔT. The variable ***RT.NO*** should be set to the cooler temperature difference (ΔT) where no chilled water temperature reset should occur. The variable ***RT.F*** should be set to the cooler temperature difference where the maximum chilled water temperature reset should occur. The variable ***RM.DG*** should be set to the maximum amount of reset desired.

To verify that reset is functioning correctly proceed to Run Status mode, sub-mode VIEW, and subtract the active set point (***Run Status→VIEW→SETP***) from the control point (***Run Status→VIEW→CTPT***) to determine the degrees reset. Figures 34-36 are examples of space, outdoor air, and water temperature resets.

Table 24 — 4 to 20 mA Reset

SUB-MODE	KEYPAD ENTRY	ITEM	DISPLAY	ITEM EXPANSION	COMMENT
RSET	ENTER	CRST	1	COOLING RESET TYPE	0 = no reset 1 = 4 to 20 mA input 2 = Outdoor air temp 3 = Return Fluid 4 = Space Temperature
	▼	MA.DG	5.0 F (2.8 C)	DEGREES COOL RESET	Default: 0° F (0° C) Reset at 20 mA Range: –30 to 30 F (–16.7 to 16.7 C)

NOTE: The example above shows how to configure the chiller for 4 to 20 mA reset. No reset will occur at 4.0 mA input, and a 5.0 F reset will occur at 20.0 mA. An EMM is required.

Table 25 — Configuring Outdoor Air and Space Temperature Reset

MODE (RED LED)	KEYPAD ENTRY	SUB-MODE	KEYPAD ENTRY	ITEM	DISPLAY		ITEM EXPANSION	COMMENT
					OUTDOOR AIR	SPACE		
CONFIGURATION	ENTER	DISP						
	▼	UNIT						
	▼	OPT1						
	▼	OPT2						
	▼	CCN						
	▼	EXV.A						
	▼	EXV.B						
	▼	MM						
	▼	RSET	ENTER	CRST	2	4	COOLING RESET TYPE	2 = Outdoor-Air Temperature 4 = Space Temperature (Connect to LVT-22,23)
			▼	RM.NO*	85° F	72° F	REMOTE - NO RESET TEMP	Default: 125.0 F (51.7 C) Range: 0° to125 F (–17.8 to 51.7 C)
			▼	RM.F	55° F	68° F	REMOTE - FULL RESET TEMP	Default: 0.0° F (–17.8 C) Range: 0° to 125 F (–17.8 to 51.7 C)
			▼	RM.DG	15° F	6° F	REMOTE - DEGREES RESET	Default: 0°Δ F (0° C) Range: –30 to 30 F (–16.7 to 16.7 C)

*One item skipped in this example.

Table 26 — Configuring Return Fluid Temperature Reset

MODE (RED LED)	KEYPAD ENTRY	SUB-MODE	KEYPAD ENTRY	ITEM	DISPLAY	ITEM EXPANSION	COMMENT
CONFIGURATION	ENTER	DISP	ENTER				
	▼	UNIT	ENTER				
	▼	OPT1	ENTER				
	▼	OPT2	ENTER				
	▼	CCN					
	▼	EXV.A					
	▼	EXV.B					
	▼	MM					
	▼	RSET	ENTER	CRST	3	COOLING RESET TYPE	0 = No Reset 1 = 4 to 20 mA Input (EMM required) (Connect to LVT-9,8) 2 = Outdoor-Air Temperature 3 = Return Fluid 4 = Space Temperature (Connect to LVT-22,23)
			▼	RT.NO*	10.0 ΔF	RETURN FLUID - NO RESET TEMP	Default: 10.0 ΔF (5.6 ΔC) Range: 0° to10 F COOLER ΔT (0 to 5.6 C)
			▼	RT.F	2.0 ΔF	RETURN FLUID - FULL RESET TEMP	Default: 0 ΔF (0 ΔC) Range: 0° to 30 F COOLER ΔT (0 to 16.7 C)
			▼	RT.DG	5.0 ΔF	RETURN - DEGREES RESET	Default: 0 ΔF (0 ΔC) Range: –30 to 30°F (–16.7 to 16.7 C)

*4 items skipped in this example.

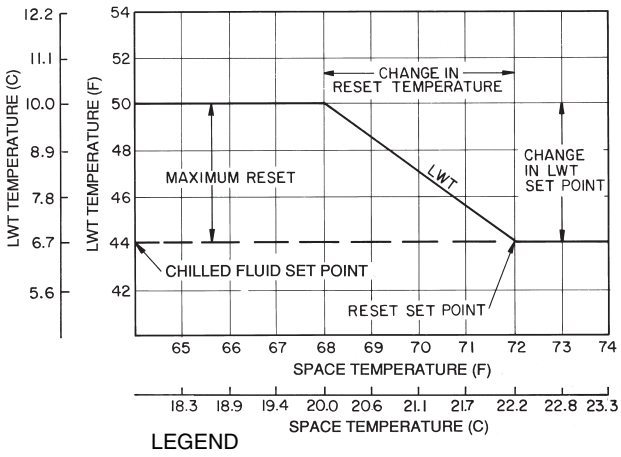

LEGEND

LWT — Leaving Water (Fluid) Temperature

Fig. 34 — Space Temperature Reset

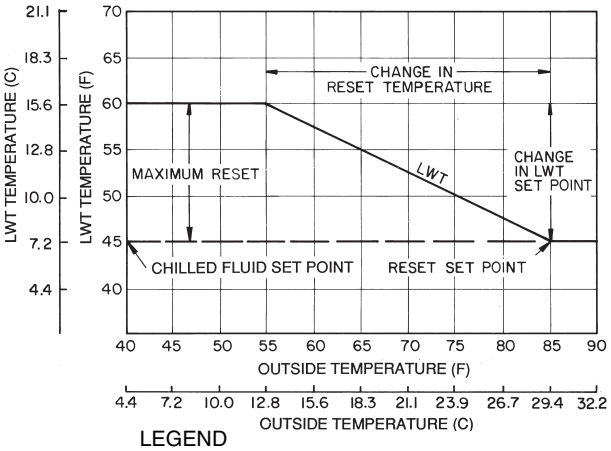

LEGEND

LWT — Leaving Water (Fluid) Temperature

Fig. 35 — Outdoor-Air Temperature Reset

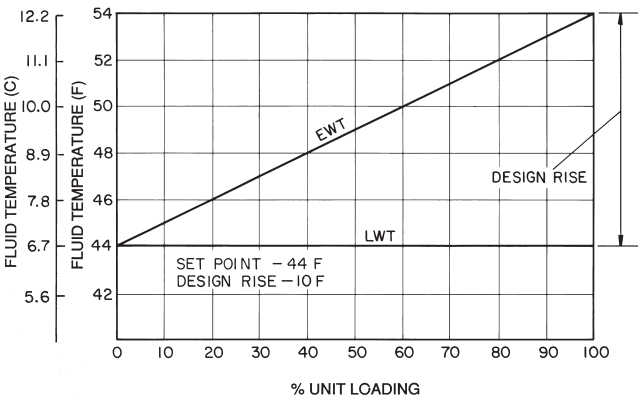

LEGEND

EWT — Entering Water (Fluid) Temperature
LWT — Leaving Water (Fluid) Temperature

Fig. 36 — Standard Chilled Fluid Temperature Control — No Reset

Under normal operation, the chiller will maintain a constant leaving fluid temperature approximately equal to the chilled fluid set point. As the cooler load varies, the entering cooler fluid will change in proportion to the load as shown in Fig. 36. Usually the chiller size and leaving-fluid temperature set point are selected based on a full-load condition. At part load, the fluid temperature set point may be colder than required. If the leaving fluid temperature was allowed to increase at part load, the efficiency of the machine would increase.

Return temperature reset allows for the leaving temperature set point to be reset upward as a function of the return fluid temperature or, in effect, the building load (see Fig. 37).

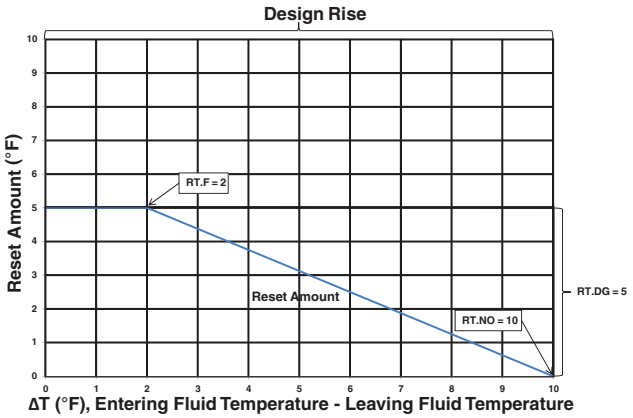

Fig. 37 — Reset Amount

Demand Limit — Demand limit is a feature that allows the unit capacity to be limited during periods of peak energy usage. There are 3 types of demand limiting that can be configured. The first type is through 2-stage switch control, which will reduce the maximum capacity to 2 user-configurable percentages. The second type is by 4 to 20 mA signal input which will reduce the maximum capacity linearly between 100% at a 4 mA input signal (no reduction) down to the user-configurable level at a 20 mA input signal. The third type uses the CCN Loadshed module and has the ability to limit the current operating capacity to maximum and further reduce the capacity if required.

NOTE: The 2-stage switch control and 4 to 20-mA input signal types of demand limiting require the energy management module (EMM).

To use demand limit, select the type of demand limiting to use. Then configure the demand limit set points based on the type selected.

DEMAND LIMIT (2-Stage Switch Controlled) — To configure demand limit for 2-stage switch control set the Demand Limit Select (***Configuration→RSET→DMDC***) to 1. Then configure the 2 Demand Limit Switch points (***Configuration→RSET→DLS1***) and (***Configuration→RSET →DLS2***) to the desired capacity limit. See Table 27. Capacity steps are controlled by 2 relay switch inputs field wired to LVT as shown in Fig. 6-19.

For demand limit by 2-stage switch control, closing the first stage demand limit contact will put the unit on the first demand limit level. The unit will not exceed the percentage of capacity entered as Demand Limit Switch 1 set point (***DLS1***). Closing contacts on the second demand limit switch prevents the unit from exceeding the capacity entered as Demand Limit Switch 2 set point. The demand limit stage that is set to the lowest demand takes priority if both demand limit inputs are closed. If the demand limit percentage does not match unit staging, the unit will limit capacity to the closest capacity stage.

To disable demand limit configure ***DMDC*** to 0. See Table 27.

EXTERNALLY POWERED DEMAND LIMIT (4 to 20 mA Controlled) — To configure demand limit for 4 to 20 mA control set the Demand Limit Select (***Configuration→RSET →DMDC***) to 2. Then configure the Demand Limit at 20 mA (***Configuration→RSET→DM20***) to the maximum loadshed value desired. Connect the output from an externally powered 4 to 20 mA signal to terminal block LVT-7,8. Refer to the unit wiring diagram for these connections to the optional/accessory energy management module and terminal block. The control will reduce allowable capacity to this level for the 20 mA signal. See Fig. 38 and Table 27.

⚠ CAUTION

Care should be taken when interfacing with other manufacturer's control systems, due to possible power supply differences, full wave bridge versus half wave rectification. The two different power supplies cannot be mixed. *Comfort*Link controls use half wave rectification. A signal isolation device should be utilized if a full wave bridge signal generating device is used.

DEMAND LIMIT (CCN Loadshed Controlled) — To configure Demand Limit for CCN Loadshed control set the Demand Limit Select (***Configuration→RSET→DMDC***) to 3. Then configure the Loadshed Group Number (***Configuration→RSET→SHNM***), Loadshed Demand Delta (***Configuration→RSET→SHDL***), and Maximum Loadshed Time (***Configuration→RSET→SHTM***). See Table 27.

The Loadshed Group number is established by the CCN system designer. The *Comfort*Link controls will respond to a Redline command from the Loadshed control. When the Redline command is received, the current stage of capacity is set to the maximum stages available. Should the loadshed control send a Loadshed command, the *Comfort*Link controls will reduce the current stages by the value entered for Loadshed Demand delta. The Maximum Loadshed Time is the maximum length of time that a loadshed condition is allowed to exist. The control will disable the Redline/Loadshed command if no Cancel command has been received within the configured maximum loadshed time limit.

Digital Scroll Option — The 30RAP010-090 units have a factory-installed option for a digital scroll compressor which provides additional stages of unloading for the unit. The digital compressor is always installed in the A1 compressor location. When a digital compressor is installed, a digital unloader solenoid (DUS) is used on the digital compressor.

DIGITAL SCROLL OPERATION — A digital scroll operates in two stages — the "loaded state" when the solenoid valve is deenergized and the "unloaded state" when the solenoid valve is energized. During the loaded state, the compressor operates like a standard scroll and delivers full capacity and mass flow.

However, during the unloaded state, there is no capacity and no mass flow through the compressor. The capacity of the system is varied by varying the time the compressor operates in an unloaded and loaded state during a 15-second period. If the DUS is energized for 7 seconds, the compressor will be operating at 47% capacity. If the DUS is energized for 10 seconds, the compressor will be operating at approximately 33% of its capacity. Capacity is the time averaged summation of loaded and unloaded states, and its range is continuous from the minimum configured capacity to 100%. Regardless of capacity, the compressor always rotates with constant speed. As the compressor transitions from a loaded to unloaded state, the discharge and suction pressures will fluctuate and the compressor sound will change.

The *Comfort*Link controller controls and integrates the operation of the DUS into the compressor staging routine to maintain temperature control. When a digital compressor is installed, an additional discharge gas temperature thermistor (DTT) is installed along with the AUX board for control of the DUS.

DIGITAL COMPRESSOR CONFIGURATION — When a digital compressor is installed, the configuration parameter (***Configuration→UNIT→A1.TY***) is configured to YES. There is also a maximum unload time configuration (***Configuration→UNIT→MAX.T***) that is set to 7 seconds, which indicates the maximum unloading for the digital compressor is 47%. This is done to optimize efficiency of the system.

Table 27 — Configuring Demand Limit

MODE	KEYPAD ENTRY	SUB-MODE	KEYPAD ENTRY	ITEM	DISPLAY	ITEM EXPANSION	COMMENT
CONFIGURATION	ENTER	DISP	ENTER				
	▼	UNIT	ENTER				
	▼	OPT1	ENTER				
	▼	OPT2	ENTER				
	▼	CCN					
	▼	EXV.A					
	▼	EXV.B					
	▼	MM					
	▼	RSET	ENTER	CRST	X	Cooling Reset Type	
			▼	DMDC*	X	Demand Limit Select	Default: 0 0 = None 1 = Switch 2 = 4 to 20 mA Input 3 = CCN Loadshed
			▼	DM20	XXX %	Demand Limit at 20 mA	Default: 100% Range: 0 to 100
			▼	SHNM	XXX	Loadshed Group Number	Default: 0 Range: 0 to 99
			▼	SHDL	XXX%	Loadshed Demand Delta	Default: 0% Range: 0 to 60%
			▼	SHTM	XXX MIN	Maximum Loadshed Time	Default: 60 min. Range: 0 to 120 min.
			▼	DLS1	XXX %	Demand Limit Switch 1	Default: 80% Range: 0 to 100%
			▼	DLS2	XXX %	Demand Limit Switch 2	Default: 50% Range: 0 to 100%

*Seven items skipped in this example.

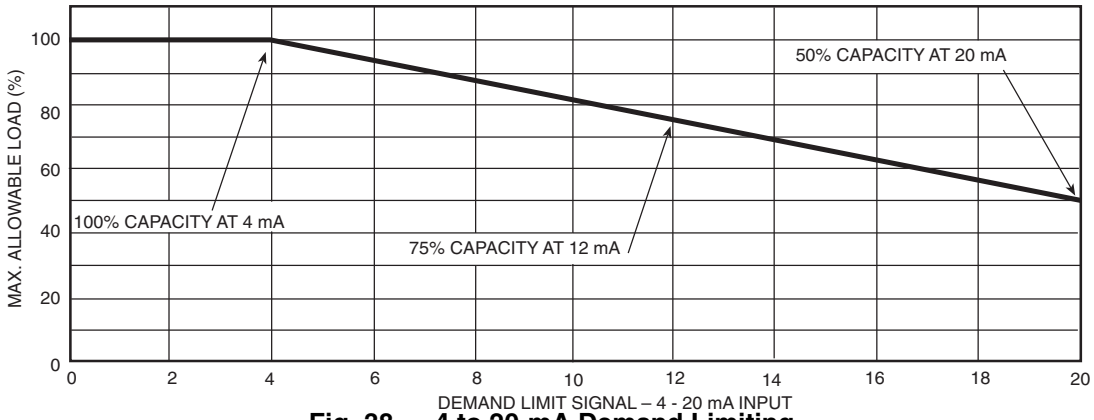

Fig. 38 — 4 to 20-mA Demand Limiting

PRE-START-UP

IMPORTANT: Before beginning Pre-Start-Up or Start-Up, complete Start-Up Checklist for 30RAP Liquid Chiller at end of this publication (pages CL-1 to CL-12). The checklist assures proper start-up of a unit, and provides a record of unit condition, application requirements, system information, and operation at initial start-up.

Do not attempt to start the chiller until the following checks have been completed.

System Check

1. Check all auxiliary components, such as chilled fluid pumps, air-handling equipment, or other equipment to which the chiller supplies liquid. Consult manufacturer's instructions. Verify that any pump interlock contacts have been properly installed. If the unit has field-installed accessories, be sure all are properly installed and wired correctly. Refer to unit wiring diagrams.
2. Use the scrolling marquee display to adjust the Cooling Set Point.
3. Fill chilled fluid circuit with clean water (with recommended inhibitor added) or other non-corrosive fluid to be cooled. Bleed all air out of the high points of the system. If chilled water is to be maintained at a temperature below 40 F (4.4 C) or outdoor temperatures are expected to be below 32 F (0° C), an antifreeze of sufficient concentration must be used to prevent freeze-up at anticipated suction temperatures.

   The chilled water loop must be cleaned before the unit is connected.

   NOTE: On units with digital scroll option do not check refrigerant charge if compressor is operating at less than 100% capacity, digital operation can be disabled by configuring ***A1.TY*** **= NO** ***(Configuration→UNIT→A1.TY)***
4. Check tightness of all electrical connections.
5. Oil should be visible in the compressor sight glass(es). See Fig. 39. For unit sizes 010-090, an acceptable oil level is from $^1/_8$ to $^3/_8$ of sight glass. For unit sizes 100-150, an acceptable oil level is from $^3/_4$ to $^7/_8$ of sight glass. No oil should be removed unless the crankcase heater, if equipped, has been energized for at least 24 hours. Adjust the oil level as required. See Oil Charge section on page 60 for Carrier approved oils.
6. Electrical power source must agree with unit nameplate.
7. All condenser fan and factory-installed hydronic package pump motors are phase. For non-HEVCF units, check for proper rotation of condenser fans first BEFORE attempting to start pumps or compressors. For HEVCF units, check the phase to ensure the supply power phase rotation is clockwise A-B-C (L1-L2-L3). To reverse rotation, interchange any two of the main incoming power leads.
8. Be sure system is fully charged with refrigerant (see Check Refrigerant Charge section on page 52).
9. Verify proper operation of cooler and hydronic package heaters (if installed). Heaters operate at the same voltage as the main incoming power supply and are single phase. Heater current is approximately 0.4 amps for 460 and 575 v units. Heater current is approximately 0.8 amps for 230 v units.

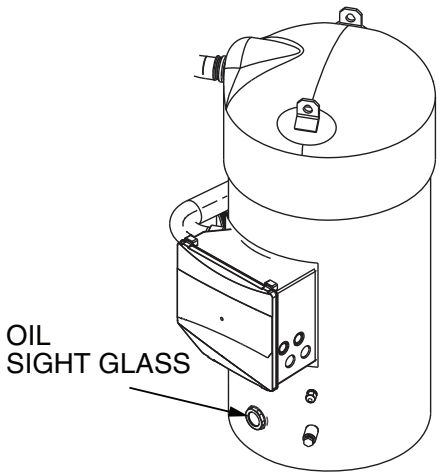

Fig. 39 — Sight Glass Location

START-UP AND OPERATION

NOTE: Refer to Start-Up Checklist on pages CL-1 to CL-12.

⚠ CAUTION

Crankcase heaters, if equipped, are wired into the control circuit, so they are always operable as long as the main power supply disconnect is on (closed), even if any safety device is open. Compressor heaters must be on for 24 hours prior to the start-up of any compressor. Equipment damage could result if heaters are not energized for at least 24 hours prior to compressor start-up.

Crankcase Heaters — Unit sizes 070-150 are equipped with crankcase heaters. Unit sizes 010-060 require field-installed crankcase heater(s) if remote cooler accessory is utilized. Compressor crankcase heaters, if equipped, must be on for 24 hours before start-up. To energize the crankcase heaters, close the field disconnect and turn on the fan circuit breakers. Leave the compressor circuit breakers off/open. The crankcase heaters are now energized.

Actual Start-Up — Actual start-up should be done only under supervision of a qualified refrigeration mechanic.

1. Be sure all service valves are open.
2. Using the scrolling marquee display, set leaving-fluid set point (***Set Points→COOL→CSP.1***). No cooling range adjustment is necessary.
3. Start chilled fluid pump (if not configured for cooler pump control).
4. Turn Enable/Off/Remote Control switch to ENABLE position.
5. Allow unit to operate and confirm that everything is functioning properly. Check to see that leaving fluid temperature agrees with leaving set point (***Set Points→COOL →CSP.1***) or (***Set Points→COOL→CSP.2***), or if reset is used, with the control point (***Run Status→VIEW →CTPT***).
6. Check the cooler leaving chilled water temperature to see that it remains well above 32 F (0° C), or the brine freezing point if the unit is a medium temperature brine unit.
7. Recheck compressor oil level (see Oil Charge section).

Check Refrigerant Charge — All 30RAP units are shipped with a complete operating charge of R-410A and should be under sufficient pressure to conduct a leak test after installation. If there is no system pressure, admit nitrogen until a pressure is observed and then proceed to test for leaks. After leaks are repaired, the system must be dehydrated.

All refrigerant charging should be done through the $^1/_4$-in. Schrader connection on the liquid line. Do NOT add refrigerant charge through the low-pressure side of the system. If complete charging is required, weigh in the appropriate charge for the circuit as shown on the unit nameplate. If partial charging is required, operate circuit at full load and use an accurate temperature sensor on the liquid line as it enters the filter drier. Use the Temperatures mode on the scrolling marquee display to show the circuit saturated condensing temperature (***Temperatures→CIR.A→SCT.A***) or (***Temperatures→CIR.B→ SCT.B***). Charging is most accurate at saturated discharge temperatures of 120 to 125 F (49 to 52 C). Block condenser airflow as required to reach this temperature range. Add refrigerant until the system subcooling (***SCT.A*** or ***SCT.B*** minus liquid line temperature entering EXV) is approximately 15 to 17 F (–9.4 to –8.3 C). Refrigerant VAPOR only may be added to a circuit through the $^1/_4$-in. suction Schrader connection on the suction line.

Charge Adjustment for Brine Operation — For 30RAP010-060 units, the 30RAP chiller does not require a medium temperature brine modification at any temperature within the chiller application range which is as low as 14 F (–10 C) leaving fluid temperature.

For 30RAP070-150 units with MCHX condenser, see Table 28 for proper charge adjustment. For 30RAP070-150 units with RTPF condenser, no charge adjustment is needed.

⚠ CAUTION

Never charge liquid into low-pressure side of system. Do not overcharge. Overcharging results in higher discharge pressure, possible compressor damage, and higher power consumption. During charging or removal of refrigerant, be sure water is continuously circulating through the cooler to prevent freezing.

Operating Limitations

COOLER FLOW RATES AND LOOP VOLUMES — Refer to Table 29 for minimum and maximum cooler flow rates, and to Table 30 for minimum fluid volume requirements.

TEMPERATURES (See Table 31 for 30RAP standard temperature limits.)

⚠ CAUTION

Do not operate with cooler leaving chiller water (fluid) temperature (LCWT) below 40 F (4.4 C) without an appropriate concentration of an inhibited antifreeze solution. Units should not be operated below 15 F (–9.4 C) when configured for medium temperature brine. Damage to the cooler and/or compressor(s) may result.

High Cooler Leaving Chilled Water (Fluid) Temperatures (LCWT) — During start-up with cooler LCWT above approximately 60 F (16 C), the unit expansion valve will limit suction pressure to approximately 142 psig (929 kPa) to avoid overloading the compressor.

Low Cooler LCWT — For standard units, the LCWT must be no lower than 40 F (4.4 C). If the unit is the factory-installed optional medium temperature brine unit, the cooler LCWT can go down to 15 F (–9.4 C).

Table 28 — Charge Adjustment for Brine Operation

	CHARGE TO BE REMOVED FROM BRINE OPERATION (LB)													
30RAP UNIT SIZE	070		080		090		100		115		130		150	
LEAVING BRINE TEMPERATURE	Ckt A	Ckt B	CktA	Ckt B	Ckt A	Ckt B	Ckt A	Ckt B	Ckt A	Ckt B	Ckt A	Ckt B	Ckt A	Ckt B
44F-35F	No Change is Needed													
34F-15F	0.8	1.1	1.1	1.1	1.1	1.1	1.1	2.0	2.0	2.0	2.0	3.0	3.0	3.0

Table 29 — Minimum Cooler Flow Rates

30RAP UNIT SIZE	MINIMUM COOLER FLOW RATE (GPM)	MAXIMUM COOLER FLOW RATE (GPM)	MINIMUM COOLER FLOW RATE (L/S)	MAXIMUM COOLER FLOW RATE (L/S)
010	13	50	0.8	3.2
011	13	45	0.8	2.8
015	17	66	1.1	4.2
016	20	63	1.3	3.9
018	20	78	1.3	4.9
020	23	91	1.5	5.7
025	28	112	1.8	7.1
030	33	133	2.1	8.4
035	41	164	2.6	10.3
040	47	186	3.0	11.7
045	53	209	3.3	13.2
050	57	228	3.6	14.4
055	63	251	4.0	15.8
060	68	270	4.3	17.0
070	86	310	5.4	19.6
080	98	355	6.2	22.4
090	107	387	6.8	24.4
100	123	444	7.8	28.0
115	140	503	8.8	31.7
130	158	569	10.0	35.8
150	175	629	11.0	39.6

Table 30 — Minimum Fluid Volume in Circulation

30RAP UNIT SIZE	NORMAL AIR CONDITIONING APPLICATION GAL/TON (L PER kW)			PROCESS COOLING, LOW AMBIENT OPERATION, OR MEDIUM TEMPERATURE BRINE APPLICATIONS GAL/TON (L PER kW)		
	STD UNIT	HGBP	DIGITAL	STD UNIT	HGBP	DIGITAL
010-016	12 (13)	N/A	3 (3.3)	12 (13)	N/A	6 (6.5)
018-030	6 (6.5)	4 (4.3)	3 (3.3)	10 (10.8)	10 (10.8)	6 (6.5)
035-150	3 (3.3)	3 (3.3)	3 (3.3)	6 (6.5)	6 (6.5)	6 (6.5)

LEGEND

HGBP — Hot Gas Bypass

Table 31 — Temperature Limits for Standard 30RAP Units

30RAP UNIT SIZE	010-030		035-150	
Temperature	F	C	F	C
Maximum Ambient Temperature	120	49	120	49
Minimum Ambient Temperature	45	7	32	0
Maximum Cooler EWT*	95	35	95	35
Maximum Cooler LWT	70	21	70	21
Minimum Cooler LWT	40	4.4	40	4.4

LEGEND

EWT — Entering Fluid (Water) Temperature
LWT — Leaving Fluid (Water) Temperature

*For sustained operation, EWT should not exceed 85 F (29.4 C).

LOW-AMBIENT OPERATION — If operating temperatures below 45 F (7 C) on size 018-030 units, and 32 F (0° C) on size 035-150 units are expected, accessory Motormaster® V control must be installed. Operating temperatures can go as low as –20 F (–29 C) on size 010-016 units, as standard, and all Greenspeed® units. Installation of wind baffles is also required. Refer to separate installation instructions for operation using this accessory. Contact your Carrier representative for details.

⚠ CAUTION

Brine duty application (below 40 F [4.4 C] LCWT) requires an appropriate concentration of an inhibited anti-freeze solution and may require low ambient head pressure control and wind baffles for proper operation. Contact your Carrier representative for additional information for the specific application.

VOLTAGE — ALL UNITS

Main Power Supply — Minimum and maximum acceptable supply voltages are listed in the Installation Instructions.

Unbalanced 3-Phase Supply Voltage — Never operate a motor where a phase imbalance between phases is greater than 2%. To determine percent voltage imbalance:

$$\% \text{ Voltage Imbalance} = 100 \times \frac{\text{max voltage deviation from avg voltage}}{\text{average voltage}}$$

The maximum voltage deviation is the largest difference between a voltage measurement across 2 legs and the average across all 3 legs.

Example: Supply voltage is 240-3-60.

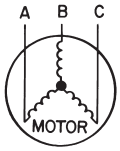

AB = 243 v
BC = 236 v
AC = 238 v

1. Determine average voltage:

$$\text{Average voltage} = \frac{243 + 236 + 238}{3} = \frac{717}{3} = 239$$

2. Determine maximum deviation from average voltage:
   (AB) 243 – 239 = 4 v
   (BC) 239 – 236 = 3 v
   (AC) 239 – 238 = 1 v
   Maximum deviation is 4 v.
3. Determine percent voltage imbalance:

$$\% \text{ Voltage Imbalance} = 100 \times \frac{4}{239} = 1.7\%$$

This voltage imbalance is satisfactory as it is below the maximum allowable of 2%.

IMPORTANT: If the supply voltage phase imbalance is more than 2%, contact your local electric utility company immediately. Do not operate unit until imbalance condition is corrected.

Control Circuit Power — Power for the control circuit is supplied from the main incoming power through a factory-installed control power transformer (TRAN1) for all models. Field wiring connections are made to the LVT.

OPERATION SEQUENCE

During unit off cycle, the control monitors the outdoor air temperature. If the ambient temperature drops below 40 F (4.4 C), cooler and hydronic system heaters (if either are factory installed) are energized. If power is maintained to the chiller and the EMERGENCY ON/OFF switch is left in the OFF position, these heaters are also energized.

The unit is started by putting the Enable/Off/Remote Control switch in the ENABLE or Remote Control position. When the unit receives a call for cooling (either from the internal control or CCN network command or Remote Control closure), the unit stages up in capacity to maintain the leaving fluid set point. The first compressor starts $1^1/_2$ to 3 minutes after the call for cooling.

The lead circuit can be specifically designated on all models or selected based on compressor run hours and starts depending on field configuration. The unit control will override this selection under certain starting conditions to properly maintain oil return to the compressors. In general, on dual compressor circuits, the control will most often start the A1 or B1 compressor first, especially after long off periods. The MBB controls fan stages to maintain the head pressure set point and will automatically adjust unit capacity as required to keep compressors from operating outside of the specified envelope. There are no pumpout or pumpdown sequences on these chillers.

For all units, if temperature reset is being used, the unit controls to a higher leaving-fluid temperature as the building load reduces. If demand limit is used, the unit may temporarily be unable to maintain the desired leaving-fluid temperature because of imposed power limitations.

SERVICE

⚠ WARNING

Electrical shock can cause personal injury and death. Shut off all power to this equipment during service. There may be more than one disconnect switch. Tag all disconnect locations to alert others not to restore power until work is completed.

Electronic Components

CONTROL COMPONENTS — Unit uses an advanced electronic control system that normally does not require service.

Access to the compressors is through latched panels from beneath the control box on all models or from opposite the coil side (sizes 010-030 only). The front door(s) provide access to the compressor(s) and all components of the refrigeration system. For size 010-030 units, access to the controls is through the upper latched outer door above the compressor access door. Similarly, the upper center latched door on sizes 035-150 gives access to the controls. Inner panels are secured in place and should not be removed unless all power to the chiller is off.

Electronic Expansion Valve (EXV) — See Fig. 40 for a cutaway view of the EXV. High-pressure liquid refrigerant enters valve through the top. As refrigerant passes through the orifice, pressure drops and refrigerant changes to a 2-phase condition (liquid and vapor). The electronic expansion valve operates through an electronically controlled activation of a stepper motor. The stepper motor stays in position, unless power pulses initiate the two discrete sets of motor stator windings for rotation in either direction. The direction depends on the phase relationship of the power pulses.

As the stepper motor rotates, its motion is transferred to linear movement by a lead screw. Refrigerant flow is modulated by either opening or closing the port. The valve includes a positive shut-off when closed.

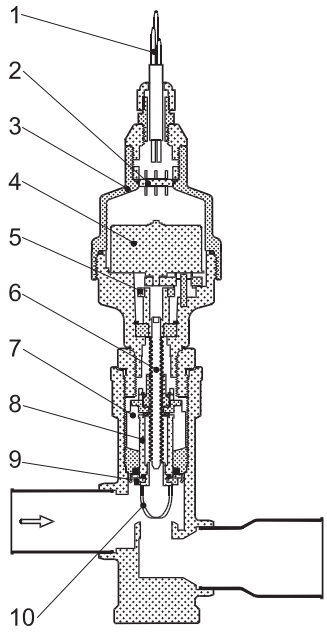

1. Cable
2. Glass Seal
3. Motor Housing
4. Stepper Motor
5. Bearing
6. Lead Screw
7. Insert
8. Valve Piston
9. Valve Seat
10. Valve Port

Fig. 40 — Cutaway View of the Electronic Expansion Valve (Size 070-150 Shown)

There are four different EXVs. Table 32 shows the number of steps, by unit size, for each type of EXV. The EXV motor moves at 200 or 150 steps per second, respectively, for sizes 010-060 or sizes 070-150. Commanding the valve to either 0% or 100% will add extra steps to the move, to ensure the value is open or closed completely.

Table 32 — EXV Steps

UNIT SIZE 30RAP	EXV STEPS
010-020	1596
025,030	2500
035-045	1596
050-060	2500
070-090, 100 CKT A	2785
100 CKT B, 110-150	3690

The EXV board controls the valve. Each circuit has a thermistor located in a well in the suction manifold before the compressor. Suction pressure as measured by the suction pressure transducer is converted to a saturated suction temperature. The thermistor measures the temperature of the superheated gas entering the compressor and the pressure transducer determines the saturated temperature of suction gas. The difference between the temperature of the superheated gas and the saturated suction temperature is the superheat. The EXV board controls the position of the electronic expansion valve stepper motor to maintain superheat set point.

The MBB controls the superheat leaving cooler to approximately 9° F (5° C). Because EXV status is communicated to the main base board (MBB) and is controlled by the EXV boards, it is possible to track the valve position. The unit is then protected against loss of charge and a faulty valve. Just prior to compressor start, the EXV will open. At low ambient temperatures the EXV is closed at start-up. After initialization period, valve position is tracked by the EXV board by constantly monitoring the amount of valve movement.

The EXV is also used to limit cooler saturated suction temperature to 50 F (10 C). This makes it possible for the chiller to start at higher cooler fluid temperatures without overloading the compressor. This is commonly referred to as MOP (maximum operating pressure). At ambient temperatures above 110 F, MOP is bypassed at start-up to prevent charge backup in the condenser.

If it appears that the EXV module is not properly controlling circuit operation to maintain correct superheat, there are a number of checks that can be made using test functions and initialization features built into the microprocessor control. See the EXV Troubleshooting Procedure section to test EXVs.

EXV Troubleshooting Procedure — Follow steps below to diagnose and correct EXV problems.

Check EXV motor operation first. Switch the Enable/Off/Remote Control (EOR) switch to the Off position. Press ESCAPE on the scrolling marquee until the display is blank or on Navigator™ display until "Select a menu item" appears on the display. Use the arrow keys to select the Service Test mode. Press ENTER. The display will be:

> TEST OFF
OUTS
COMP

Press ENTER (password entry may be required) and use ▲ to change "OFF" to "ON". Switch the EOR switch to Enable. The Service Test mode is now enabled. Move the pointer down to the OUTS sub-mode and press ENTER. Move the pointer to item ***EXV.A*** or ***EXV.B*** as needed. Press ENTER and

the valve position will flash. Use ▲ to select 100% valve position (hold ▲ for quick movement) and press ENTER.

The technician should be able to feel the actuator moving by placing a hand on the EXV. A sight glass is located on the valve body to verify that the actuator is moving. A hard knocking should be felt from the actuator when it reaches the top of its stroke (can be heard if surroundings are relatively quiet). Press ENTER again twice if necessary to confirm this. To close the valve, press ENTER, select 0% with ▼ and press ENTER. The actuator should knock when it reaches the bottom of its stroke. If it is believed that the valve is not working properly, continue with the checkout procedure below.

Check the EXV output signals at appropriate terminals on the EXV board (see Fig. 41 or 42). Do not disconnect EXV connector with power applied to the board. Damage to the board may result if disconnected while under power. Connect positive test lead to EXV-J6 terminal 3 for Circuit A, EXV-J7 terminal 3 for Circuit B. Set meter to approximately 20 vdc. Using the Service Test procedure above, move the valve output under test to 100%. DO NOT short meter leads together or pin 3 to any other pin as board damage will occur.

⚠ CAUTION

Do not disconnect EXV connector with power applied to the board. Damage to the board may result if disconnected while under power. DO NOT short meter leads together or pin 3 to any other pin as board damage will occur.

During the next several seconds, carefully connect the negative test lead to pins 1,2,4 and 5 in succession (plug J6 for Circuit A, plug J7 for Circuit B). Digital voltmeters will average this signal and display approximately 6 vdc. If it remains constant at a voltage other than 6 vdc or shows 0 volts, remove the connector to the valve and recheck.

Press ENTER and select 0% to close the valve. Check the 4-position DIP switch on the board (all switches should be set to On). If a problem still exists, replace the EXV board. If the reading is correct, the expansion valve and EXV wiring should be checked.

1. Check color coding and wire connections. Make sure they are connected to the correct terminals at the EXV board and EXV plug and that the cables are not crossed.
2. Check for continuity and tight connection at all pin terminals.
3. If the motor fails to operate properly, check the resistance of each motor phase. Remove the EXV Board connector (J6 for Circuit A, J7 for Circuit B). Check the resistance of the two windings. Resistance between pins 1 and 2 for one winding or between pins 4 and 5 for the other winding should be approximately 100 ± 10 ohms (sizes 010-060) or 52 ± 5.2 ohms (sizes 070-150). Differences of more than 10% between windings indicate a defective motor. Resistance between any lead and ground should be infinite or "open." Any resistance reading will indicate a shorted winding and the valve will need to be replaced.

FIELD SERVICING INSTRUCTIONS — EXVs on sizes 025, 030, and 050-150 can be serviced. See Fig. 40 for a cutaway view of the EXV for sizes 070-150. Motor kits for the EXVs on sizes 025, 030, and 050-150 are available as replacement parts. The EXVs on sizes 010-020 and 035-045 are hermetic and cannot be disassembled for installation or during service.

EXV REPLACEMENT (ALL SIZES) — To replace the valve, perform the following procedure:

1. Be sure the refrigerant has been recovered from the circuit.
2. Disconnect the EXV cable from the EXV. For sizes 010-060, refer to Fig. 41 and remove the EXV retainer clip, taking care not to damage the clip as it will be required for installation later.
3. The valve may be replaced by cutting the piping. A tubing cutter must be used to prevent creating contaminants in the piping.
4. The EXVs have copper connections and any brazing alloy can be used to install the valve. During installation the torch flame should be directed away from the valve body and cable. The valve body should be wrapped with a wet cloth during the brazing operation. Be sure to use a nitrogen purge while brazing the valve in place.
5. Check for refrigerant leaks.
6. Once the valve body has cooled, reconnect the EXV cable. Care should be taken to ensure engagement of the alignment key. On sizes 010-060, install the EXV cable retainer clip.
7. Check the operation of the valve using the EXV Troubleshooting Procedure on page 54.

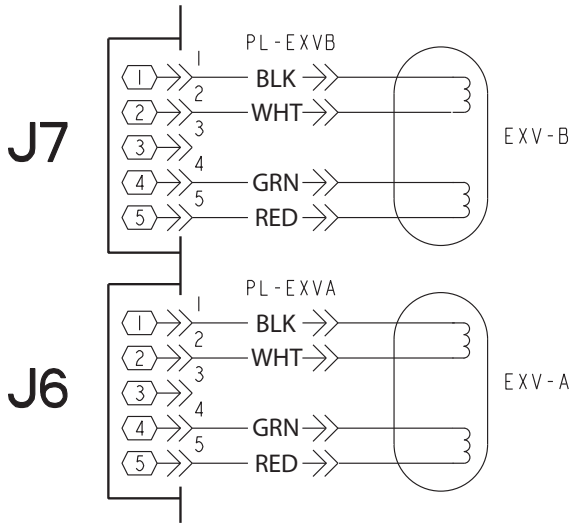

Fig. 41 — 30RAP010-060 EXV Cable Connections to EXV Module

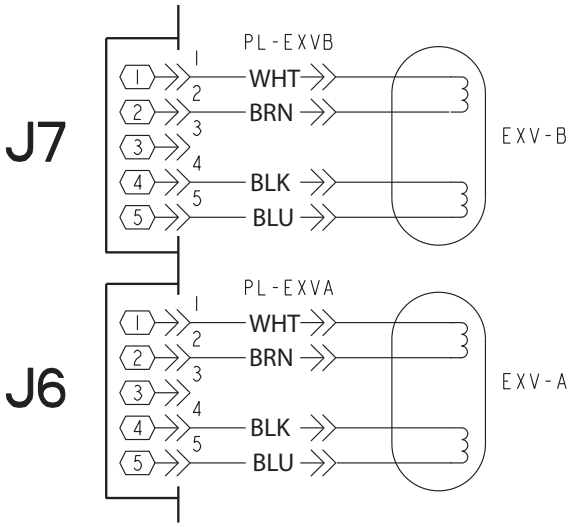

Fig. 42 — 30RAP070-150 EXV Cable Connections to EXV Module

VALVE MOTOR REPLACEMENT

Sizes 025, 030, and 050-060

IMPORTANT: Obtain replacement gasket before opening EXV. Do not re-use gaskets.

Perform the following procedure to replace the EXV motor:

1. Be sure the refrigerant has been recovered from the circuit.
2. Remove power from the EXV board.
3. Refer to Fig. 43 and remove the EXV retainer clip, taking care not to damage the clip as it will be required for installation later.
4. Using a wrench and back-up wrench, remove the motor assembly from the EXV body by placing the back-up wrench on the valve body.
5. To install the motor, be sure to use a new gasket. Connect the EXV cable to the EXV motor assembly.
6. Use Service Test as described on page 40 to open the EXV to 100%. This will retract the piston fully. Remove power from the EXV board prior to removing the EXV cable. Remove the EXV cable from the motor prior to installation. For 025, 030, 050-060 sizes, replacement motors are shipped in the retracted position and may be installed as received; therefore, this step may be skipped if installing a new motor.

⚠ CAUTION

If the existing motor has been removed for inspection or cleaning, be sure that the piston is fully retracted into the motor assembly before installation on the valve. Failure to do so will permanently damage the drive and motor. Replacement motor assemblies are shipped in the retracted position and may be installed as received.

7. Lightly oil the threads and gasket on the new motor. Carefully seat the motor on the valve body. Using a wrench and back-up wrench as described above, tighten the motor assembly as follows: one eighth turn more than hand tight is sufficient to achieve a leak proof seal.
8. After the motor is tightened, the cable should be replaced on the valve. Care should be taken to ensure engagement of the alignment key. Install the EXV cable retainer clip (see Fig. 43).
9. Pressurize the system and check for leaks.
10. Reapply control power and test the operation using Service Test.

Sizes 070-150

IMPORTANT: Obtain replacement gasket before opening EXV. Do not re-use gaskets.

Perform the following procedure to replace the EXV motor:

1. Be sure the refrigerant has been recovered from the circuit.
2. On sizes 070-150, use Service Test as described on page 40 to open the EXV to 100%. This will retract the piston fully.
3. Remove power from the EXV board and then disconnect the EXV cable from the EXV.
4. Using a wrench and back-up wrench, remove the motor assembly from the EXV body. Be sure to place the back-up wrench on the adapter to remove the motor as shown in Fig. 44.
5. To install the motor, be sure to use a new gasket.
6. Manually depress the valve piston before installing the motor assembly. This will allow for the lead screw to engage the piston as the motor is installed.
7. Lightly oil the threads and gasket on the new motor. Carefully seat the motor on the valve body. Using a wrench and back-up wrench as described above, tighten the motor assembly as follows: Tighten the motor to 36 ft-lb (50 N•m) and then tighten an additional 30 degrees as indicated in Fig. 44.
8. After tightening the motor, replace the cable on the valve. Care should be taken to ensure engagement of the alignment key. Pressurize the system and check for leaks.
9. Reapply control power and test the operation using Service Test.

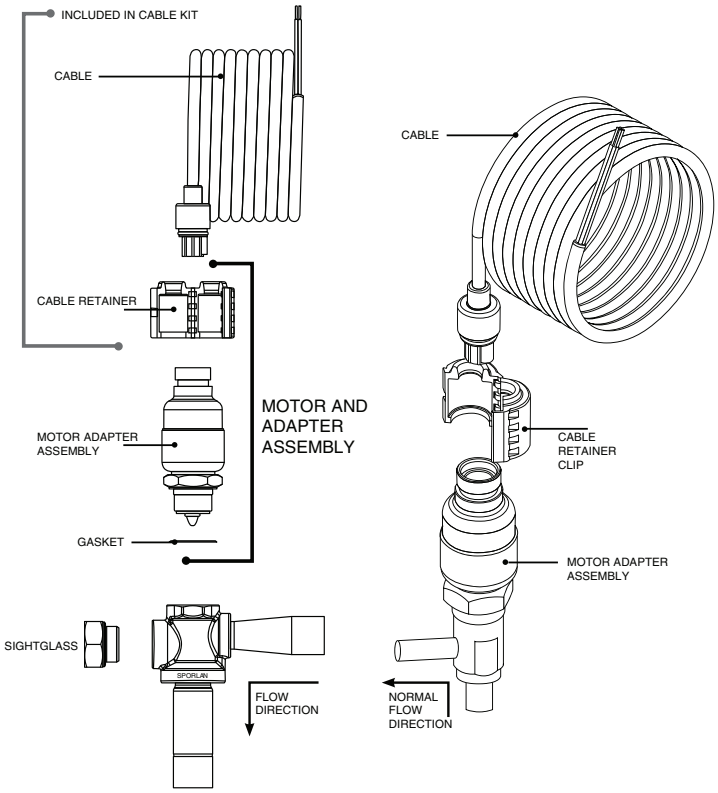

Fig. 43 — Electronic Expansion Valve Details (010-060)

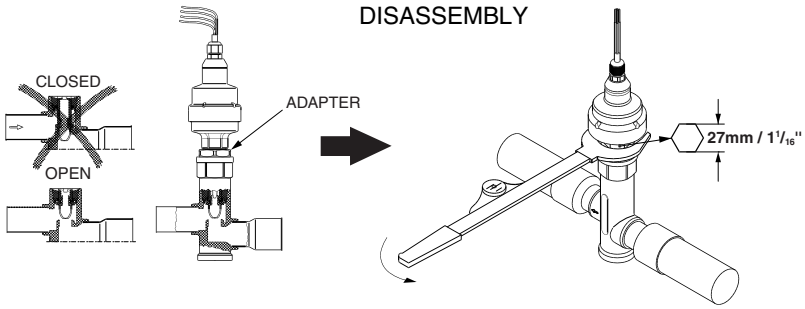

NOTE: Open valve in Quick Test sub-mode before disassembling.

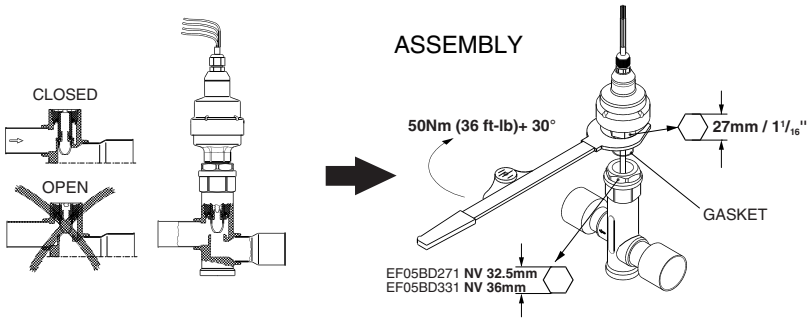

NOTES:
1. Push down on valve piston to close valve before assembling.
2. After valve is assembled close valve in Quick Test sub-mode or cycle power before opening service valve.

Fig. 44 — Disassembly and Assembly of EXV Motor (070-150)

Compressor Replacement (Fig. 45-47) — All models contain scroll compressors and have from one to six compressors. The size 010-030 units are a single refrigeration circuit while sizes 035-150 are dual circuit. Disconnect power to unit using lockout tagout procedures.

Remove the junction box cover bolts (Danfoss compressors only) and disconnect the compressor power and ground connections. Remove the cable from the compressor junction box. Knock the same holes out of the new compressor junction box and install the cable connectors from the old compressor.

The compressors are bolted to rails, which are in turn bolted to the unit basepan for all sizes except 010 and 015 which are directly bolted to the basepan. Remove the 4 bolts holding the compressor to the rail on the basepan. Save the mounting hardware for use with the new compressor. Carefully cut the compressor suction and discharge lines with a tubing cutter as close to the compressor as feasible. Remove high-pressure

switch and pressure transducer(s) if required for compressor removal. Lift one corner of the compressor at a time and remove all the rubber mounting grommets (single compressor circuits) or steel spacers (dual compressor circuits). Remove the old compressor from the unit.

Slide the new compressor in place on the basepan. Lifting one side of the compressor at a time, replace all of the compressor mounting grommets. Using new tubing as required, reconnect compressor suction and discharge lines. Using hardware saved, reinstall the mounting bolts and washers through the compressor feet. Using proper techniques, braze suction and discharge lines and check for leaks. Reconnect oil equalization line on dual compressor circuit models.

Reconnect the compressor power connections and high-pressure switch wiring as on the old compressor. Refer to Fig. 45-47. Following the installation of the new compressor, tighten all hardware to the following specifications. (See Table 33.)

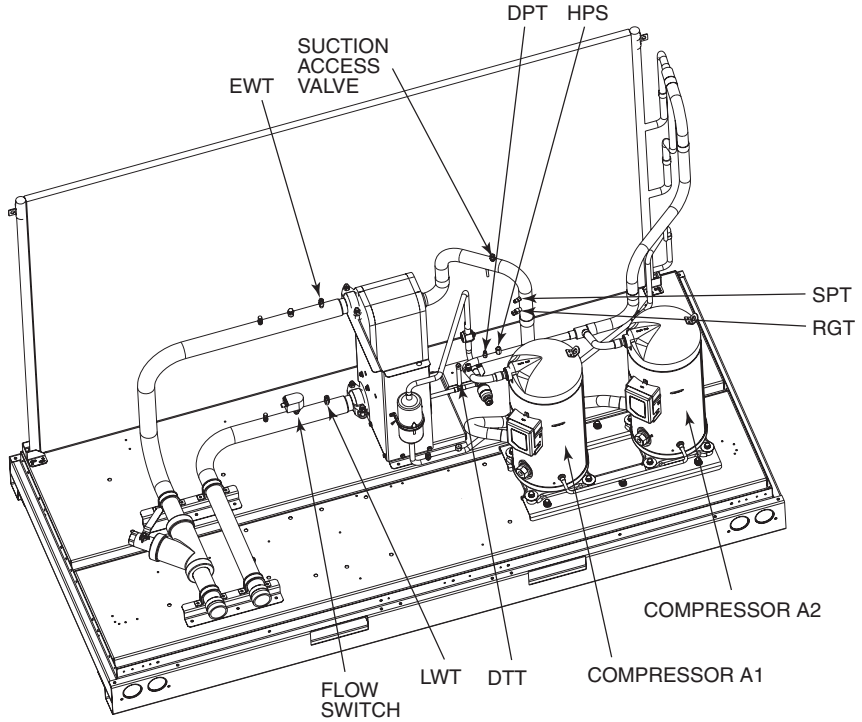

LEGEND

DPT — Discharge Pressure Thermostat
DTT — Discharge Temperature Thermistor
EWT — Entering Water Thermistor
HPS — High Pressure Switch
LWT — Leaving Water Thermistor
RGT — Return Gas Thermistor
SPT — Suction Pressure Transducer

Fig. 45 — Component Location — 30RAP010-030

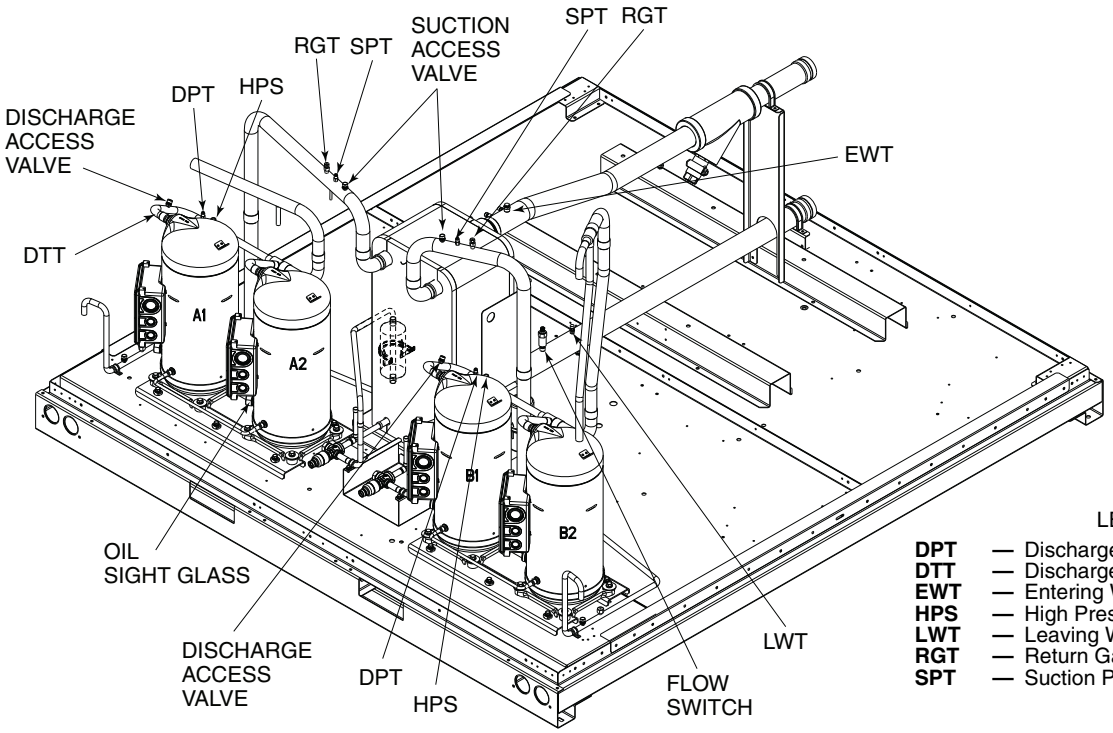

LEGEND

DPT — Discharge Pressure Thermostat
DTT — Discharge Temperature Thermistor
EWT — Entering Water Thermistor
HPS — High Pressure Switch
LWT — Leaving Water Thermistor
RGT — Return Gas Thermistor
SPT — Suction Pressure Transducer

Fig. 46 — Component Location — 30RAP035-060

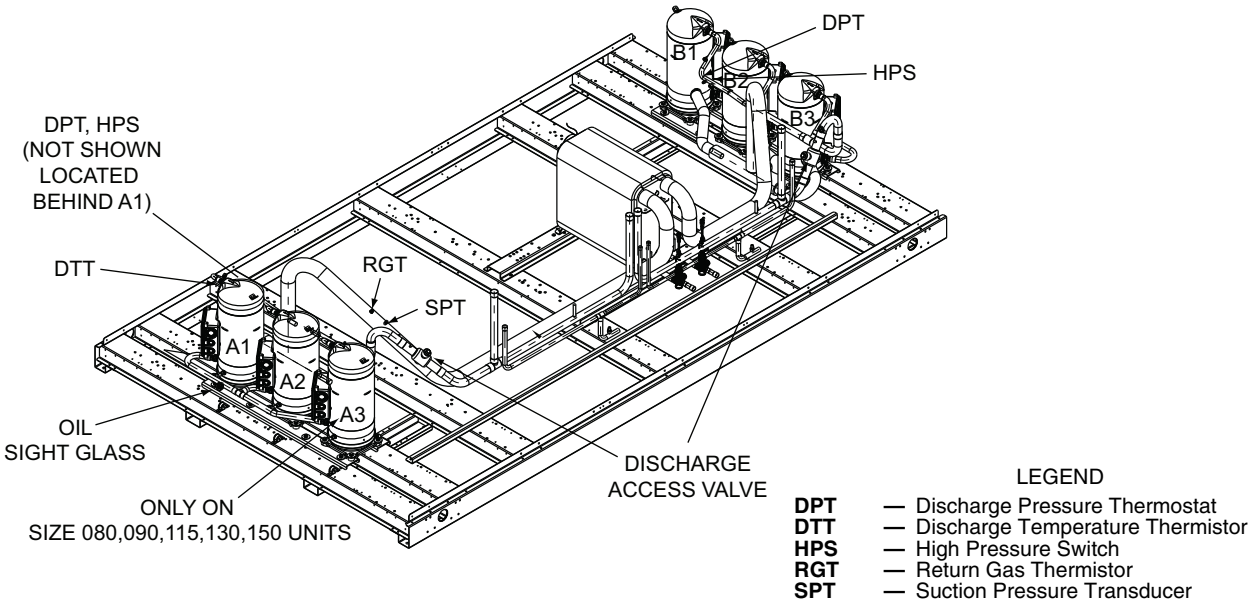

Fig. 47 — Component Location — 30RAP070-150

Table 33 — Unit Torque Specification

FASTENER	RECOMMENDED TORQUE
Compressor Mounting Bolts	7 to 10 ft-lb (9.5 to 13.5 N•m)
Compressor Power Connections	24 to 28 in.-lb (2.7- to 3.2 N•m)
Compressor Ground Terminal Connections	14 to 18 in.-lb (1.6 to 2.0 N•m)

Crankcase Heater — The 30RAP070-150 units are equipped with crankcase heaters. 30RAP070-090 units utilize a 90-watt heater on each compressor. See Fig. 48. 30RAP100-150 units utilize a 56-watt heater secured to the bottom of each compressor (see Fig. 49). The 30RAP010-060 units are not equipped with crankcase heaters because the system refrigerant charge is less than the compressor manufacturer's requirement.

Crankcase heaters are required on all units installed with remote coolers. Refer to remote cooler installation instructions for more information.

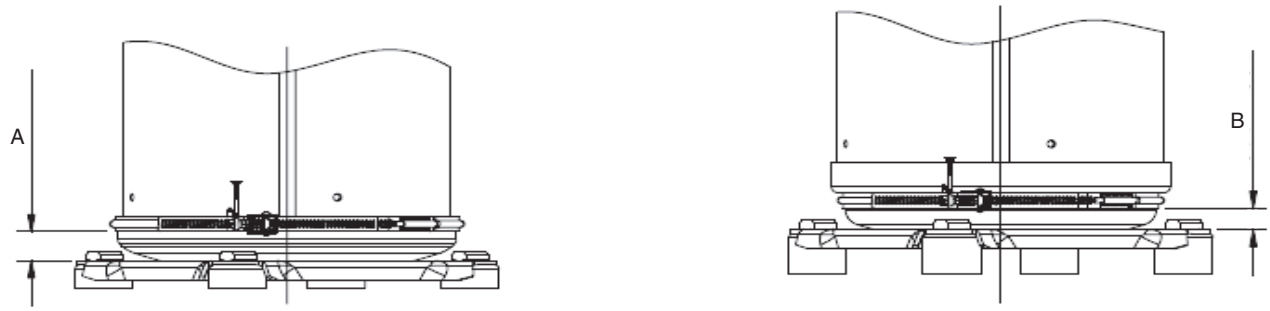

A = $^{9}/_{16}$ in. – $^{15}/_{16}$ in.
B = $^{1}/_{2}$ in. – $^{11}/_{16}$ in.

Fig. 48 — Crankcase Heater Location, 30RAP070-090

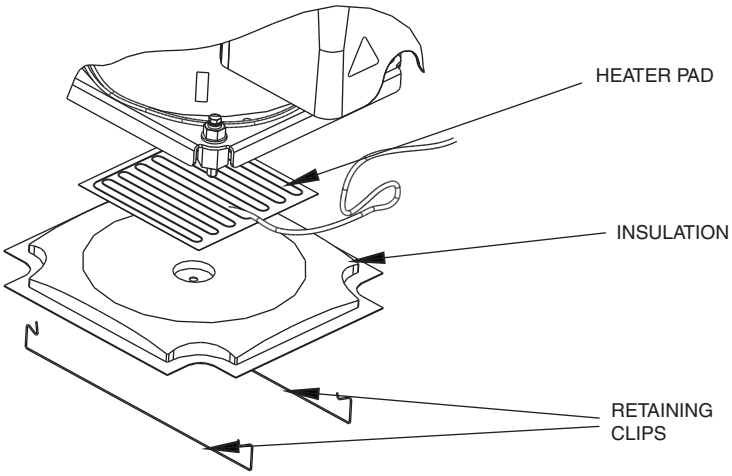

Fig. 49 — Crankcase Heater Detail Under Compressor, 30RAP100-150

Cooler

BRAZED-PLATE COOLER HEAT EXCHANGER REPLACEMENT — Brazed-plate heat exchangers cannot be repaired if they develop a leak. If a leak (refrigerant or water) develops, the heat exchanger **must be** replaced. To replace a brazed-plate heat exchanger:

1. Check that the replacement heat exchanger is the same as the original heat exchanger. The unit insulation covers the manufacturer's part number. Make sure the depths of the replacement and original cooler heat exchangers are the same.
2. Disconnect the liquid-in and liquid-out connections at the heat exchanger.
3. Recover the refrigerant from the system, and unsolder the refrigerant-in and refrigerant-out connections.
4. Remove the old heat exchanger. Save the mounting hardware for use with the replacement heat exchanger. The replacement heat exchanger is supplied fully insulated. It also includes a cooler heater. Use of the heater is not required unless the original cooler contained a factory-installed heater.
5. Install the replacement heat exchanger in the unit and attach the mounting bracket hardware to the fan uprights (sizes 010-030) or to the bottom bracket (sizes 035-150) using the hardware removed in Step 4. Reconnect the cooler heater if required. For sizes 010-025, torque the bolts to 7 to 10 ft-lb (9.5 to 13.5 N•m). For sizes 030-150, torque the bolts to 30 to 50 ft-lb (40.6 to 67.7 N•m).
6. *Carefully* braze the refrigerant lines to the connections on the heat exchanger. Lines should be soldered using silver as the soldering material with a minimum of 45% silver. Keep the temperature below 1472 F (800 C) under normal soldering conditions (no vacuum) to prevent the copper solder of the brazed plate heat exchanger from changing its structure. Failure to do so can result in internal or external leakage at the connections which cannot be repaired. Braze the liquid lines with a heat sink around the expansion valve to protect it from excess heat.
7. Reconnect the water/brine lines.
8. Dehydrate and recharge the unit. Check for leaks.

BRAZED-PLATE COOLER HEAT EXCHANGER CLEANING — Brazed-plate heat exchangers must be cleaned chemically. A professional cleaning service skilled in chemical cleaning should be used. Use a weak acid (5% phosphoric acid, or if the heat exchanger is cleaned frequently, 5% oxalic acid). Pump the cleaning solution through the exchanger, preferably in a backflush mode. After cleaning, rinse with large amounts of fresh water to dispose of all the acid. Cleaning materials must be disposed of properly.

The factory-installed strainer screen in front of the water/brine inlets of the heat exchangers should be cleaned periodically, depending on condition of the chiller water/brine.

Oil Charge

⚠ CAUTION

The compressor in a Puron® refrigerant (R-410A) system uses a polyolester (POE) oil. This is extremely hygroscopic, meaning it absorbs water readily. POE oils can absorb 15 times as much water as other oils designed for HCFC and CFC refrigerants. Take all necessary precautions to avoid exposure of the oil to the atmosphere. Failure to do so could result in possible equipment damage.

Puron refrigerant systems use a polyolester (POE) oil. Use only Carrier-approved compressor oil. Oil should be visible in compressor oil sight glass. An acceptable oil level is from $^1/_8$ to $^3/_8$ of sight glass for unit size 010-090, and $^3/_4$ to $^7/_8$ of sight glass for unit size 100-150. All compressors must be off when checking oil level. Recommended oil level adjustment method is as follows:

ADD OIL — Recover charge from the unit. Add oil to suction line Schrader valve on tandem compressors sets and the compressor Schrader on the three-compressor circuits and single-compressor circuits. (See Fig. 45-47.) When oil can be seen at the bottom of the sight glass, add oil in 5 oz increments which is approximately $^1/_8$ in oil level. Run all compressors for 20 minutes then shut off to check oil level. Repeat procedure until acceptable oil level is present.

NOTE: Use only Carrier-approved compressor oil.

- Oil Type . . . . . Inhibited polyolester-based synthetic compressor lubricant.
- ISO Viscosity Grade 32

  Approved sources are:

  UNIT SIZES 010-090

MANUFACTURER	OIL
Totaline	3MAF POE, P903-1601
Mobil	EAL Arctic 32-3MA
Uniqema (ICI)	Emkarate RL32-3MAF

UNIT SIZES 100-150

MANUFACTURER	OIL
Totaline	P903-2401
Uniqema (ICI)	Emkarate RL 32H

Do not reuse drained oil or any oil that has been exposed to the atmosphere.

Microchannel Heat Exchanger (MCHX) Condenser Coil Maintenance and Cleaning Recommendations

⚠ CAUTION

Do not apply any chemical cleaners to MCHX condenser coils. These cleaners can accelerate corrosion and damage the coil.

Routine cleaning of coil surfaces is essential to maintain proper operation of the unit. Elimination of contamination and removal of harmful residues will greatly increase the life of the coil and extend the life of the unit. The following steps should be taken to clean MCHX condenser coils:

1. Remove any foreign objects or debris attached to the coil face or trapped within the mounting frame and brackets.
2. Put on personal protective equipment including safety glasses and/or face shield, waterproof clothing, and gloves. It is recommended to use full coverage clothing.
3. Start high pressure water sprayer and purge any soap or industrial cleaners from sprayer before cleaning condenser coils. Only clean, potable water is authorized for cleaning condenser coils.
4. Clean condenser face by spraying the coil steadily and uniformly from top to bottom while directing the spray straight toward the coil. Do not exceed 900 psig or 30 degree angle. The nozzle must be at least 12 in. from the coil face. Reduce pressure and use caution to prevent damage to air centers.

Round Tube Plate Fin (RTPF) Condenser Coil Maintenance and Cleaning Recommendations — Routine cleaning of coil surfaces is essential to maintain proper operation of the unit. Elimination of contamination and removal of harmful residues will greatly increase the life of the coil and extend the life of the unit. The following maintenance and cleaning procedures are recommended as part of the routine maintenance activities to extend the life of the coil.

REMOVE SURFACE LOADED FIBERS — Surface loaded fibers or dirt should be removed with a vacuum cleaner. If a vacuum cleaner is not available, a soft non-metallic bristle brush may be used. In either case, the tool should be applied in the direction of the fins. Coil surfaces can be easily damaged (fin edges can be easily bent over and damage to the coating of a protected coil) if the tool is applied across the fins.

NOTE: Use of a water stream, such as a garden hose, against a surface loaded coil will drive the fibers and dirt into the coil. This will make cleaning efforts more difficult. Surface loaded fibers must be completely removed prior to using low velocity clean water rinse.

PERIODIC CLEAN WATER RINSE — A periodic clean water rinse is very beneficial for coils that are applied in coastal or industrial environments. However, it is very important that the water rinse is made with very low velocity water stream to avoid damaging the fin edges. Monthly cleaning is recommended.

ROUTINE CLEANING OF COIL SURFACES — Routine cleaning with Totaline® environmentally balanced coil cleaner is essential to extend the life of coils. This cleaner is available from Carrier Replacement parts division as part number P902-0301 for a one-gallon container, and part number P902-0305 for a 5-gallon container. It is recommended that all coils, including the standard copper tube aluminum fin, pre-coated fin, copper fin, or e-coated coils be cleaned with the Totaline environmentally balanced coil cleaner as described below. Coil cleaning should be part of the unit's regularly scheduled maintenance procedures to ensure long life of the coil. Failure to clean the coils may result in reduced durability in the environment.

Avoid the use of:
- coil brighteners
- acid cleaning prior to painting
- high pressure washers
- poor quality water for cleaning

Totaline environmentally balanced coil cleaner is non-flammable, hypoallergenic, nonbacterial, and a USDA accepted biodegradable agent that will not harm the coil or surrounding components such as electrical wiring, painted metal surfaces, or insulation. Use of non-recommended coil cleaners is strongly discouraged since coil and unit durability could be affected.

⚠ CAUTION

Excessive water pressure will fracture the braze between air centers and refrigerant tubes.

Check Refrigerant Feed Components

FILTER DRIER — The function of the filter drier is to maintain a clean, dry system. The moisture indicator (described below) indicates any need to change the filter drier. The filter drier is a sealed-type drier. When the drier needs to be changed, the entire filter drier must be replaced.

NOTE: Dual circuit (035-150 sizes) units have 1 filter drier per circuit.

MOISTURE-LIQUID INDICATOR — The indicator is located immediately ahead of the EXV to provide an indication of the refrigerant moisture content. It also provides a sight glass for refrigerant liquid. Clear flow of liquid refrigerant (*at full unit loading*) indicates sufficient charge in the system. Bubbles in the sight glass (*at full unit loading*) indicate an undercharged system or the presence of noncondensables. Moisture in the system, measured in parts per million (ppm), changes the color of the indicator as follows:

Green (safe) — Moisture is below 75 ppm
Yellow-Green (caution) — 75 to 150 ppm
Yellow (wet) — above 150 ppm

The unit must be in operation at least 12 hours before the moisture indicator gives an accurate reading, and must be in contact with *liquid* refrigerant. At the first sign of moisture in the system, change the corresponding filter drier.

NOTE: Dual circuit (035-150 sizes) units have one indicator per circuit.

MINIMUM LOAD VALVE — On units equipped with the factory-installed capacity reduction option, a solenoid valve and discharge bypass valve (minimum load valve) are located between the discharge line and the cooler entering-refrigerant line. The MBB cycles the solenoid to perform minimum load valve function and the discharge bypass valve modulates to the suction pressure set point and the valve.

The amount of capacity reduction achieved by the minimum load valve is not adjustable. The total unit capacity with the minimum load valve is shown in Table .

PRESSURE RELIEF DEVICES — All units have one pressure relief device per circuit located in the liquid line which relieves at 210 F (100 C).

Check Unit Safeties

HIGH-PRESSURE SWITCH — A high-pressure switch is provided to protect each compressor and refrigeration system from unsafe high pressure conditions. See Table 34 for high-pressure switch settings.

The high-pressure switch is mounted in the discharge line of each circuit. If an unsafe, high-pressure condition should exist, the switch opens and shuts off the affected circuit. The CSB senses the compressor feedback signal and generates an appropriate alarm. The MBB prevents the circuit from restarting until the alert condition is reset. The switch should open at the pressure corresponding to the appropriate switch setting as shown in Table 34.

Table 34 — Factory Settings, High-Pressure Switch (Fixed)

UNIT	CUTOUT		CUT-IN	
	PSIG	KPA	PSIG	KPA
30RAP	650	4482	500	3447

Clear the alarm using the scrolling marquee display. The unit should restart after the compressor anti-short-cycle delay, built into the unit control module, expires.

PRESSURE TRANSDUCERS — Each refrigerant circuit is equipped with a suction and discharge pressure transducer. These inputs to the MBB are not only used to monitor the status of the unit, but to also maintain operation of the chiller within the compressor manufacturer's specified limits. The input to the MBB from the suction pressure transducer is also used to protect the compressor from operating at low pressure conditions and low superheat conditions. In some cases, the unit may not be able to run at full capacity. The control module will automatically reduce the capacity of a circuit as needed to maintain specified maximum/minimum operating pressures.

COOLER FREEZE-UP PROTECTION

⚠ CAUTION

On medium temperature brine units, the anti-freeze solution must be properly mixed to prevent freezing at a temperature of at least 15 F (8.3 C) below the leaving-fluid temperature set point. Failure to provide the proper anti-freeze solution mixture may damage the cooler, water piping, and/or hydronic package and is considered abuse and may impair or otherwise negatively impact the Carrier warranty.

The main base board (MBB) monitors leaving fluid temperature at all times. The MBB will rapidly remove stages of capacity as necessary to prevent freezing conditions due to the rapid loss of load or low cooler fluid flow.

When the cooler is exposed to lower ambient temperatures (34 F [1° C] or below), freeze-up protection is required using inhibited ethylene or propylene glycol.

The input from the low pressure transducer provides additional cooler freeze protection. The MBB shuts down the unit when a low pressure condition exists that could cause the cooler to freeze up.

HEATER CABLE — Optional factory-installed cooler and/or hydronic package heaters are cycled based on the input from the outside-air temperature sensor. These heaters, when installed, are designed to protect the cooler and/or hydronic package from freezing down to –20 F (–29 C). Power for these heaters is supplied from the main unit power.

⚠ CAUTION

Do not disconnect main unit power when servicing compressor(s) if ambient temperature is below 40 F (4.4 C) if the chilled water loop is not protected with an appropriate concentration of an inhibited antifreeze solution. The compressors have a circuit breaker that can be used to shut off power to the compressors. If the chilled water loop is not protected with an appropriate concentration of an inhibited antifreeze solution and power to the unit must be off for a prolonged period, drain the cooler, hydronic package (if installed) and internal piping. Add glycol according to Winter Shutdown Step 2 below. Failure to do so may damage the cooler, water piping, and/or hydronic package.

WINTER SHUTDOWN — Do not shut off power disconnect during off-season shutdown. At end of the cooling season:

1. Drain water from system.
2. Replace drain plug(s) and add sufficient inhibited ethylene glycol (or other suitable inhibited antifreeze) to cooler, pump, and piping to prevent freezing of residual water.
3. At the beginning of the next cooling season, refill the cooler and add the recommended inhibitor.

Thermistors — Electronic control uses up to five 5 kΩ thermistors to sense temperatures used to control operation of the chiller. Thermistors EWT, LWT, RGTA, RGTB, and OAT are identical in their temperature and voltage drop performance. The SPT space temperature thermistor has a 10 kΩ input channel and it has a different set of temperature vs. resistance and voltage drop performance. Resistance at various temperatures are listed in Tables 35-39. For dual chiller operation, a dual chiller sensor is required which is a 5 kΩ thermistor. When a digital compressor is used, a DTT (digital temperature thermistor) is used. The DTT is an 86 kΩ thermistor.

REPLACING THERMISTORS (EWT, LWT, RGT) — Add a small amount of thermal conductive grease to the thermistor well and end of probe. For all probes, tighten the retaining nut $^1/_4$ turn past finger tight. See Fig. 50 and 51. Insulate the thermistor with cork tape or other appropriate insulating material.

THERMISTOR/TEMPERATURE SENSOR CHECK — A high quality digital volt-ohmmeter is required to perform this check.

1. Connect the digital voltmeter across the appropriate thermistor terminals at the J8 terminal strip on the Main Base Board (see Fig. 51).
2. Using the voltage reading obtained, read the sensor temperature from Tables 35-39. Supply voltage to the thermistor should be 4 vdc ± 0.2 v with the thermistor disconnected from the MBB.
3. To check thermistor accuracy, measure temperature at probe location with an accurate thermocouple-type temperature measuring instrument. Insulate thermocouple to avoid ambient temperatures from influencing reading. Temperature measured by thermocouple and temperature determined from thermistor voltage reading should be close, ± 5° F (3° C) if care was taken in applying thermocouple and taking readings.

If a more accurate check is required, unit must be shut down and thermistor removed and checked at a known temperature (freezing point or boiling point of water) using either voltage drop measured across thermistor at the J8 terminal, by determining the resistance with chiller shut down and thermistor disconnected from J8. Compare the values determined with the value read by the control in the Temperatures mode using the scrolling marquee display.

Table 35 — 5K Thermistor Temperatures (°F) vs. Resistance/Voltage Drop (Voltage Drop for EWT, LWT, DLWT, RGT, and OAT)

TEMP (F)	VOLTAGE DROP (V)	RESISTANCE (OHMS)
–25	3.699	98,010
–24	3.689	94,707
–23	3.679	91,522
–22	3.668	88,449
–21	3.658	85,486
–20	3.647	82,627
–19	3.636	79,871
–18	3.624	77,212
–17	3.613	74,648
–16	3.601	72,175
–15	3.588	69,790
–14	3.576	67,490
–13	3.563	65,272
–12	3.550	63,133
–11	3.536	61,070
–10	3.523	59,081
–9	3.509	57,162
–8	3.494	55,311
–7	3.480	53,526
–6	3.465	51,804
–5	3.450	50,143
–4	3.434	48,541
–3	3.418	46,996
–2	3.402	45,505
–1	3.386	44,066
0	3.369	42,679
1	3.352	41,339
2	3.335	40,047
3	3.317	38,800
4	3.299	37,596
5	3.281	36,435
6	3.262	35,313
7	3.243	34,231
8	3.224	33,185
9	3.205	32,176
10	3.185	31,202
11	3.165	30,260
12	3.145	29,351
13	3.124	28,473
14	3.103	27,624
15	3.082	26,804
16	3.060	26,011
17	3.038	25,245
18	3.016	24,505
19	2.994	23,789
20	2.972	23,096
21	2.949	22,427
22	2.926	21,779
23	2.903	21,153
24	2.879	20,547
25	2.856	19,960
26	2.832	19,393
27	2.808	18,843
28	2.784	18,311
29	2.759	17,796
30	2.735	17,297
31	2.710	16,814
32	2.685	16,346
33	2.660	15,892
34	2.634	15,453
35	2.609	15,027
36	2.583	14,614
37	2.558	14,214
38	2.532	13,826
39	2.506	13,449
40	2.480	13,084
41	2.454	12,730
42	2.428	12,387
43	2.402	12,053
44	2.376	11,730
45	2.349	11,416
46	2.323	11,112
47	2.296	10,816
48	2.270	10,529
49	2.244	10,250
50	2.217	9,979
51	2.191	9,717
52	2.165	9,461
53	2.138	9,213
54	2.112	8,973
55	2.086	8,739
56	2.060	8,511
57	2.034	8,291
58	2.008	8,076
59	1.982	7,686
60	1.956	7,665
61	1.930	7,468
62	1.905	7,277
63	1.879	7,091
64	1.854	6,911
65	1.829	6,735
66	1.804	6,564
67	1.779	6,399
68	1.754	6,238
69	1.729	6,081
70	1.705	5,929
71	1.681	5,781
72	1.656	5,637
73	1.632	5,497
74	1.609	5,361
75	1.585	5,229
76	1.562	5,101
77	1.538	4,976
78	1.516	4,855
79	1.493	4,737
80	1.470	4,622
81	1.448	4,511
82	1.426	4,403
83	1.404	4,298
84	1.382	4,196
85	1.361	4,096
86	1.340	4,000
87	1.319	3,906
88	1.298	3,814
89	1.278	3,726
90	1.257	3,640
91	1.237	3,556
92	1.217	3,474
93	1.198	3,395
94	1.179	3,318
95	1.160	3,243
96	1.141	3,170
97	1.122	3,099
98	1.104	3,031
99	1.086	2,964
100	1.068	2,898
101	1.051	2,835
102	1.033	2,773
103	1.016	2,713
104	0.999	2,655
105	0.983	2,597
106	0.966	2,542
107	0.950	2,488
108	0.934	2,436
109	0.918	2,385
110	0.903	2,335
111	0.888	2,286
112	0.873	2,239
113	0.858	2,192
114	0.843	2,147
115	0.829	2,103
116	0.815	2,060
117	0.801	2,018
118	0.787	1,977
119	0.774	1,937
120	0.761	1,898
121	0.748	1,860
122	0.735	1,822
123	0.723	1,786
124	0.710	1,750
125	0.698	1,715
126	0.686	1,680
127	0.674	1,647
128	0.663	1,614
129	0.651	1,582
130	0.640	1,550
131	0.629	1,519
132	0.618	1,489
133	0.608	1,459
134	0.597	1,430
135	0.587	1,401
136	0.577	1,373
137	0.567	1,345
138	0.557	1,318
139	0.548	1,291
140	0.538	1,265
141	0.529	1,240
142	0.520	1,214
143	0.511	1,190
144	0.502	1,165
145	0.494	1,141
146	0.485	1,118
147	0.477	1,095
148	0.469	1,072
149	0.461	1,050
150	0.453	1,029
151	0.445	1,007
152	0.438	986
153	0.430	965
154	0.423	945
155	0.416	925
156	0.408	906
157	0.402	887
158	0.395	868
159	0.388	850
160	0.381	832
161	0.375	815
162	0.369	798
163	0.362	782
164	0.356	765
165	0.350	750
166	0.344	734
167	0.339	719
168	0.333	705
169	0.327	690
170	0.322	677
171	0.317	663
172	0.311	650
173	0.306	638
174	0.301	626
175	0.296	614
176	0.291	602
177	0.286	591
178	0.282	581
179	0.277	570
180	0.272	561
181	0.268	551
182	0.264	542
183	0.259	533
184	0.255	524
185	0.251	516
186	0.247	508
187	0.243	501
188	0.239	494
189	0.235	487
190	0.231	480
191	0.228	473
192	0.224	467
193	0.220	461
194	0.217	456
195	0.213	450
196	0.210	445
197	0.206	439
198	0.203	434
199	0.200	429
200	0.197	424
201	0.194	419
202	0.191	415
203	0.188	410
204	0.185	405
205	0.182	401
206	0.179	396
207	0.176	391
208	0.173	386
209	0.171	382
210	0.168	377
211	0.165	372
212	0.163	367
213	0.160	361
214	0.158	356
215	0.155	350
216	0.153	344
217	0.151	338
218	0.148	332
219	0.146	325
220	0.144	318
221	0.142	311
222	0.140	304
223	0.138	297
224	0.135	289
225	0.133	282

Table 36 — 5K Thermistor Temperatures (°C) vs. Resistance/Voltage Drop (Voltage Drop for EWT, LWT, DLWT, RGT, and OAT)

TEMP (C)	VOLTAGE DROP (V)	RESISTANCE (OHMS)
–32	3.705	100,260
–31	3.687	94,165
–30	3.668	88,480
–29	3.649	83,170
–28	3.629	78,125
–27	3.608	73,580
–26	3.586	69,250
–25	3.563	65,205
–24	3.539	61,420
–23	3.514	57,875
–22	3.489	54,555
–21	3.462	51,450
–20	3.434	48,536
–19	3.406	45,807
–18	3.376	43,247
–17	3.345	40,845
–16	3.313	38,592
–15	3.281	38,476
–14	3.247	34,489
–13	3.212	32,621
–12	3.177	30,866
–11	3.140	29,216
–10	3.103	27,633
–9	3.065	26,202
–8	3.025	24,827
–7	2.985	23,532
–6	2.945	22,313
–5	2.903	21,163
–4	2.860	20,079
–3	2.817	19,058
–2	2.774	18,094
–1	2.730	17,184
0	2.685	16,325
1	2.639	15,515
2	2.593	14,749
3	2.547	14,026
4	2.500	13,342
5	2.454	12,696
6	2.407	12,085
7	2.360	11,506
8	2.312	10,959
9	2.265	10,441
10	2.217	9,949
11	2.170	9,485
12	2.123	9,044
13	2.076	8,627
14	2.029	8,231
15	1.982	7,855
16	1.935	7,499
17	1.889	7,161
18	1.844	6,840
19	1.799	6,536
20	1.754	6,246
21	1.710	5,971
22	1.666	5,710
23	1.623	5,461
24	1.580	5,225
25	1.538	5,000
26	1.497	4,786
27	1.457	4,583
28	1.417	4,389
29	1.378	4,204
30	1.340	4,028
31	1.302	3,861
32	1.265	3,701
33	1.229	3,549
34	1.194	3,404
35	1.160	3,266
36	1.126	3,134
37	1.093	3,008
38	1.061	2,888
39	1.030	2,773
40	0.999	2,663
41	0.969	2,559
42	0.940	2,459
43	0.912	2,363
44	0.885	2,272
45	0.858	2,184
46	0.832	2,101
47	0.807	2,021
48	0.782	1,944
49	0.758	1,871
50	0.735	1,801
51	0.713	1,734
52	0.691	1,670
53	0.669	1,609
54	0.649	1,550
55	0.629	1,493
56	0.610	1,439
57	0.591	1,387
58	0.573	1,337
59	0.555	1,290
60	0.538	1,244
61	0.522	1,200
62	0.506	1,158
63	0.490	1,118
64	0.475	1,079
65	0.461	1,041
66	0.447	1,006
67	0.433	971
68	0.420	938
69	0.407	906
70	0.395	876
71	0.383	836
72	0.371	805
73	0.360	775
74	0.349	747
75	0.339	719
76	0.329	693
77	0.319	669
78	0.309	645
79	0.300	623
80	0.291	602
81	0.283	583
82	0.274	564
83	0.266	547
84	0.258	531
85	0.251	516
86	0.244	502
87	0.237	489
88	0.230	477
89	0.223	466
90	0.217	456
91	0.211	446
92	0.204	436
93	0.199	427
94	0.193	419
95	0.188	410
96	0.182	402
97	0.177	393
98	0.172	385
99	0.168	376
100	0.163	367
101	0.158	357
102	0.154	346
103	0.150	335
104	0.146	324
105	0.142	312
106	0.138	299
107	0.134	285

Table 37 — 10K Thermistor Temperature (°F) vs. Resistance/Voltage Drop (For SPT)

TEMP (F)	VOLTAGE DROP (V)	RESISTANCE (OHMS)
–25	4.758	196,453
–24	4.750	189,692
–23	4.741	183,300
–22	4.733	177,000
–21	4.724	171,079
–20	4.715	165,238
–19	4.705	159,717
–18	4.696	154,344
–17	4.686	149,194
–16	4.676	144,250
–15	4.665	139,443
–14	4.655	134,891
–13	4.644	130,402
–12	4.633	126,183
–11	4.621	122,018
–10	4.609	118,076
–9	4.597	114,236
–8	4.585	110,549
–7	4.572	107,006
–6	4.560	103,558
–5	4.546	100,287
–4	4.533	97,060
–3	4.519	94,020
–2	4.505	91,019
–1	4.490	88,171
0	4.476	85,396
1	4.461	82,729
2	4.445	80,162
3	4.429	77,662
4	4.413	75,286
5	4.397	72,940
6	4.380	70,727
7	4.363	68,542
8	4.346	66,465
9	4.328	64,439
10	4.310	62,491
11	4.292	60,612
12	4.273	58,781
13	4.254	57,039
14	4.235	55,319
15	4.215	53,693
16	4.195	52,086
17	4.174	50,557
18	4.153	49,065
19	4.132	47,627
20	4.111	46,240
21	4.089	44,888
22	4.067	43,598
23	4.044	42,324
24	4.021	41,118
25	3.998	39,926
26	3.975	38,790
27	3.951	37,681
28	3.927	36,610
29	3.903	35,577
30	3.878	34,569
31	3.853	33,606
32	3.828	32,654
33	3.802	31,752
34	3.776	30,860
35	3.750	30,009
36	3.723	29,177
37	3.697	28,373
38	3.670	27,597
39	3.654	26,838
40	3.615	26,113
41	3.587	25,396
42	3.559	24,715
43	3.531	24,042
44	3.503	23,399
45	3.474	22,770
46	3.445	22,161
47	3.416	21,573
48	3.387	20,998
49	3.357	20,447
50	3.328	19,903
51	3.298	19,386
52	3.268	18,874
53	3.238	18,384
54	3.208	17,904
55	3.178	17,441
56	3.147	16,991
57	3.117	16,552
58	3.086	16,131
59	3.056	15,714
60	3.025	15,317
61	2.994	14,925
62	2.963	14,549
63	2.932	14,180
64	2.901	13,824
65	2.870	13,478
66	2.839	13,139
67	2.808	12,814
68	2.777	12,493
69	2.746	12,187
70	2.715	11,884
71	2.684	11,593
72	2.653	11,308
73	2.622	11,031
74	2.592	10,764
75	2.561	10,501
76	2.530	10,249
77	2.500	10,000
78	2.470	9,762
79	2.439	9,526
80	2.409	9,300
81	2.379	9,078
82	2.349	8,862
83	2.319	8,653
84	2.290	8,448
85	2.260	8,251
86	2.231	8,056
87	2.202	7,869
88	2.173	7,685
89	2.144	7,507
90	2.115	7,333
91	2.087	7,165
92	2.059	6,999
93	2.030	6,838
94	2.003	6,683
95	1.975	6,530
96	1.948	6,383
97	1.921	6,238
98	1.894	6,098
99	1.867	5,961
100	1.841	5,827
101	1.815	5,698
102	1.789	5,571
103	1.763	5,449
104	1.738	5,327
105	1.713	5,210
106	1.688	5,095
107	1.663	4,984
108	1.639	4,876
109	1.615	4,769
110	1.591	4,666
111	1.567	4,564
112	1.544	4,467
113	1.521	4,370
114	1.498	4,277
115	1.475	4,185
116	1.453	4,096
117	1.431	4,008
118	1.409	3,923
119	1.387	3,840
120	1.366	3,759
121	1.345	3,681
122	1.324	3,603
123	1.304	3,529
124	1.284	3,455
125	1.264	3,383
126	1.244	3,313
127	1.225	3,244
128	1.206	3,178
129	1.187	3,112
130	1.168	3,049
131	1.150	2,986
132	1.132	2,926
133	1.114	2,866
134	1.096	2,809
135	1.079	2,752
136	1.062	2,697
137	1.045	2,643
138	1.028	2,590
139	1.012	2,539
140	0.996	2,488
141	0.980	2,439
142	0.965	2,391
143	0.949	2,343
144	0.934	2,297
145	0.919	2,253
146	0.905	2,209
147	0.890	2,166
148	0.876	2,124
149	0.862	2,083
150	0.848	2,043
151	0.835	2,003
152	0.821	1,966
153	0.808	1,928
154	0.795	1,891
155	0.782	1,855
156	0.770	1,820
157	0.758	1,786
158	0.745	1,752
159	0.733	1,719
160	0.722	1,687
161	0.710	1,656
162	0.699	1,625
163	0.687	1,594
164	0.676	1,565
165	0.666	1,536
166	0.655	1,508
167	0.645	1,480
168	0.634	1,453
169	0.624	1,426
170	0.614	1,400
171	0.604	1,375
172	0.595	1,350
173	0.585	1,326
174	0.576	1,302
175	0.567	1,278
176	0.558	1,255
177	0.549	1,233
178	0.540	1,211
179	0.532	1,190
180	0.523	1,169
181	0.515	1,148
182	0.507	1,128
183	0.499	1,108
184	0.491	1,089
185	0.483	1,070
186	0.476	1,052
187	0.468	1,033
188	0.461	1,016
189	0.454	998
190	0.447	981
191	0.440	964
192	0.433	947
193	0.426	931
194	0.419	915
195	0.413	900
196	0.407	885
197	0.400	870
198	0.394	855
199	0.388	841
200	0.382	827
201	0.376	814
202	0.370	800
203	0.365	787
204	0.359	774
205	0.354	762
206	0.349	749
207	0.343	737
208	0.338	725
209	0.333	714
210	0.328	702
211	0.323	691
212	0.318	680
213	0.314	670
214	0.309	659
215	0.305	649
216	0.300	639
217	0.296	629
218	0.292	620
219	0.288	610
220	0.284	601
221	0.279	592
222	0.275	583
223	0.272	574
224	0.268	566
225	0.264	557

Table 38 — 10K Thermistor Temperature (°C) vs. Resistance/Voltage Drop (For SPT)

TEMP (C)	VOLTAGE DROP (V)	RESISTANCE (OHMS)	TEMP (C)	VOLTAGE DROP (V)	RESISTANCE (OHMS)	TEMP (C)	VOLTAGE DROP (V)	RESISTANCE (OHMS)
–32	4.762	200,510	**15**	3.056	15,714	**62**	0.940	2,315
–31	4.748	188,340	**16**	3.000	15,000	**63**	0.913	2,235
–30	4.733	177,000	**17**	2.944	14,323	**64**	0.887	2,157
–29	4.716	166,342	**18**	2.889	13,681	**65**	0.862	2,083
–28	4.700	156,404	**19**	2.833	13,071	**66**	0.837	2,011
–27	4.682	147,134	**20**	2.777	12,493	**67**	0.813	1,943
–26	4.663	138,482	**21**	2.721	11,942	**68**	0.790	1,876
–25	4.644	130,402	**22**	2.666	11,418	**69**	0.767	1,813
–24	4.624	122,807	**23**	2.610	10,921	**70**	0.745	1,752
–23	4.602	115,710	**24**	2.555	10,449	**71**	0.724	1,693
–22	4.580	109,075	**25**	2.500	10,000	**72**	0.703	1,637
–21	4.557	102,868	**26**	2.445	9,571	**73**	0.683	1,582
–20	4.533	97,060	**27**	2.391	9,164	**74**	0.663	1,530
–19	4.508	91,588	**28**	2.337	8,776	**75**	0.645	1,480
–18	4.482	86,463	**29**	2.284	8,407	**76**	0.626	1,431
–17	4.455	81,662	**30**	2.231	8,056	**77**	0.608	1,385
–16	4.426	77,162	**31**	2.178	7,720	**78**	0.591	1,340
–15	4.397	72,940	**32**	2.127	7,401	**79**	0.574	1,297
–14	4.367	68,957	**33**	2.075	7,096	**80**	0.558	1,255
–13	4.335	65,219	**34**	2.025	6,806	**81**	0.542	1,215
–12	4.303	61,711	**35**	1.975	6,530	**82**	0.527	1,177
–11	4.269	58,415	**36**	1.926	6,266	**83**	0.512	1,140
–10	4.235	55,319	**37**	1.878	6,014	**84**	0.497	1,104
–9	4.199	52,392	**38**	1.830	5,774	**85**	0.483	1,070
–8	4.162	49,640	**39**	1.784	5,546	**86**	0.470	1,037
–7	4.124	47,052	**40**	1.738	5,327	**87**	0.457	1,005
–6	4.085	44,617	**41**	1.692	5,117	**88**	0.444	974
–5	4.044	42,324	**42**	1.648	4,918	**89**	0.431	944
–4	4.003	40,153	**43**	1.605	4,727	**90**	0.419	915
–3	3.961	38,109	**44**	1.562	4,544	**91**	0.408	889
–2	3.917	36,182	**45**	1.521	4,370	**92**	0.396	861
–1	3.873	34,367	**46**	1.480	4,203	**93**	0.386	836
0	3.828	32,654	**47**	1.439	4,042	**94**	0.375	811
1	3.781	31,030	**48**	1.400	3,889	**95**	0.365	787
2	3.734	29,498	**49**	1.362	3,743	**96**	0.355	764
3	3.686	28,052	**50**	1.324	3,603	**97**	0.345	742
4	3.637	26,686	**51**	1.288	3,469	**98**	0.336	721
5	3.587	25,396	**52**	1.252	3,340	**99**	0.327	700
6	3.537	24,171	**53**	1.217	3,217	**100**	0.318	680
7	3.485	23,013	**54**	1.183	3,099	**101**	0.310	661
8	3.433	21,918	**55**	1.150	2,986	**102**	0.302	643
9	3.381	20,883	**56**	1.117	2,878	**103**	0.294	626
10	3.328	19,903	**57**	1.086	2,774	**104**	0.287	609
11	3.274	18,972	**58**	1.055	2,675	**105**	0.279	592
12	3.220	18,090	**59**	1.025	2,579	**106**	0.272	576
13	3.165	17,255	**60**	0.996	2,488	**107**	0.265	561
14	3.111	16,464	**61**	0.968	2,400			

Table 39 — 86K Thermistor vs Resistance (DTT)

TEMP (C)	TEMP (F)	RESISTANCE (OHMS)	TEMP (C)	TEMP (F)	RESISTANCE (OHMS)
-40	**-40**	2,889,600	**75**	**167**	12,730
-35	**-31**	2,087,220	**80**	**176**	10,790
-30	**-22**	1,522,200	**85**	**185**	9,200
-25	**-13**	1,121,440	**90**	**194**	7,870
-20	**-4**	834,720	**95**	**203**	6,770
-15	**5**	627,280	**100**	**212**	5,850
-10	**14**	475,740	**105**	**221**	5,090
-5	**23**	363,990	**110**	**230**	4,450
0	**32**	280,820	**115**	**239**	3,870
5	**41**	218,410	**120**	**248**	3,350
10	**50**	171,170	**125**	**257**	2,920
15	**59**	135,140	**130**	**266**	2,580
20	**68**	107,440	**135**	**275**	2,280
25	**77**	86,000	**140**	**284**	2,020
30	**86**	69,280	**145**	**293**	1,800
35	**95**	56,160	**150**	**302**	1,590
40	**104**	45,810	**155**	**311**	1,390
45	**113**	37,580	**160**	**320**	1,250
50	**122**	30,990	**165**	**329**	1,120
55	**131**	25,680	**170**	**338**	1,010
60	**140**	21,400	**175**	**347**	920
70	**158**	15,070	**180**	**356**	830

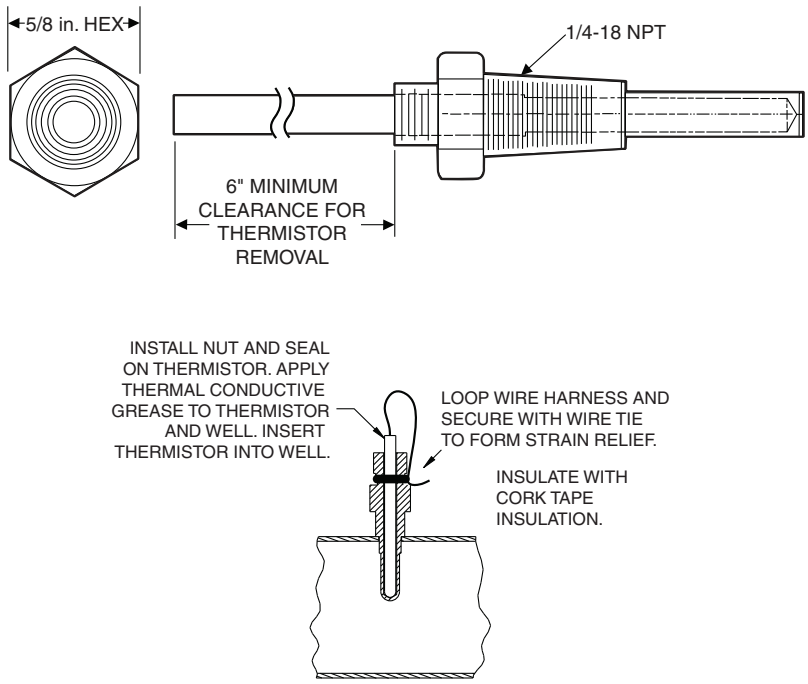

Fig. 50 — Thermistor Well and Return Gas Thermistor (RGT) Mounting

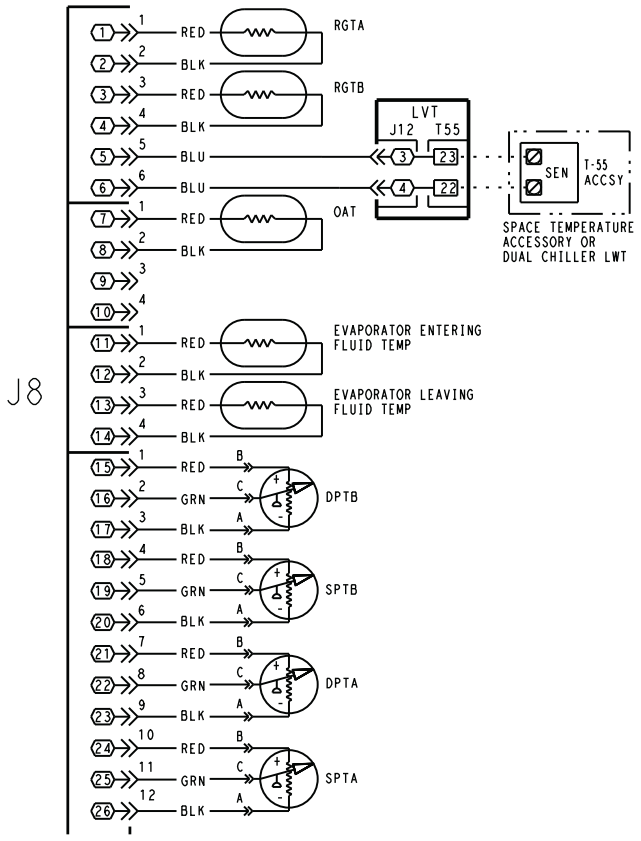

LEGEND

ACCSY	— Accessory
DPT	— Discharge Pressure Transducer
LWT	— Leaving Water Temperature Sensor
LVT	— Low Voltage Terminal
OAT	— Outdoor Air Temperature Sensor
RGT	— Return Gas Temperature Sensor
SEN	— Sensor Terminal Block
SPT	— Space Temperature Sensor

Fig. 51 — Thermistor Connections to Main Base Board, J8 Connector

Pressure Transducers — The suction and discharge transducers are different part numbers and can be distinguished by the color of the transducer body, suction (yellow) and discharge (red). No pressure transducer calibration is required. The transducers operate on a 5 vdc supply, which is generated by the main base board (MBB). See Fig. 51 for transducer connections to the J8 connector on the MBB.

TROUBLESHOOTING — If a transducer is suspected of being faulty, first check supply voltage to the transducer. Supply voltage should be 5 vdc ± 0.2 v. If supply voltage is correct, compare the pressure reading displayed on the scrolling marquee display module against pressure shown on a calibrated pressure gauge. Pressure readings should be within ± 15 psig. If the two readings are not reasonably close, replace the pressure transducer.

Chilled Water Flow Switch — A factory-installed flow switch is installed in the leaving fluid piping for all units without the factory-installed hydronic package. See Fig. 52. Units with the optional hydronic package have the flow switch installed in the entering fluid piping. This is a thermal-dispersion flow switch with no field adjustments. The switch is set for approximately 0.5 ft/sec of flow. The sensor tip houses two thermistors and a heater element. One thermistor is located in the sensor tip, closest to the flowing fluid. This thermistor is used to detect changes in the flow velocity of the liquid. The second thermistor is bonded to the cylindrical wall and is affected only by changes in the temperature of the liquid. The thermistors are positioned to be in close contact with the wall of the sensor probe and, at the same time, to be kept separated from each other within the confines of the probe.

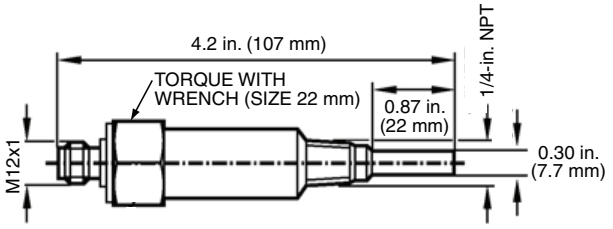

Fig. 52 — Chilled Water Flow Switch

In order to sense flow, it is necessary to heat one of the thermistors in the probe. When power is applied, the tip of the probe is heated. As the fluid starts to flow, heat will be carried away from the sensor tip. Cooling of the first thermistor is a function of how fast heat is conducted away by the flowing liquid.

The difference in temperature between the two thermistors provides a measurement of fluid velocity past the sensor probe. When fluid velocity is high, more heat will be carried away from the heated thermistor and the temperature differential will be small. As fluid velocity decreases, less heat will be taken from the heated thermistor and there will be an increase in temperature differential.

When unit flow rate is above the minimum flow rate, then the output is switched on, sending 24 vac to the MBB to prove flow has been established.

For recommended maintenance, check the sensor tip for build-up every 6 months. Clean the tip with a soft cloth. If necessary, build-up (e.g., lime) can be removed with a common vinegar cleansing agent.

The flow sensor cable is provided with 3 LEDs that indicate if 24 vac power is present and also status of the switch contacts. The LEDs are as follows:

- Green LED ON – 24 vac present
- One Yellow LED ON – Flow sensor switch OPEN
- Two Yellow LEDs ON – Flow sensor switch CLOSED

If nuisance trips of the sensor are occurring, follow the steps below to correct the situation:

1. Check to confirm that the factory-installed strainer is clean. Use the blowdown valve provided or remove the screen and clean it. In the case of VFD controlled pumps, ensure that the minimum speed setting has not been changed.
2. Measure the pressure drop across the cooler or cooler/pump system and compare this to the system requirements.
3. Verify that cable connections at the switch and at the terminal block are secure.
4. For factory-installed hydronic systems, verify that:
   - All air has been purged from the system.
   - Circuit setter balance valve has been correctly set.
5. Pump impeller has been improperly trimmed and is not providing sufficient flow.
6. Wrong pump motor rotation. Pump must rotate clockwise when viewed from motor end of pump.

Strainer — Periodic factory-installed strainer cleaning is required. Pressure drop across strainer in excess of 3 psi (21 kPa) indicates the need for cleaning. Normal (clean) pressure drop is approximately 1 psi (6.9 kPa). Open the factory-installed blowdown valve to clean the strainer. If required, shut the chiller down and remove the strainer screen to clean. When strainer has been cleaned, enter "YES" for Strainer Maintenance Done (***Run Status→PM→S.T.MN***).

Condenser Fans — Two types of condenser fans are offered in the 30RAP units: metal (value sound) fans, and Aero-Acoustic™ (low sound) fans. Each fan is supported by a formed wire mount bolted to a fan deck and covered with a wire guard.

METAL (VALUE SOUND) FANS — The exposed end of fan motor shaft is protected from weather by grease and a rubber boot. If fan motor must be removed for service or replacement, when reinstalling the motor be sure to mount the motor band in the proper location, re-grease fan shaft, and reinstall fan guard. The fan hub must be facing up. For proper performance with the value sound fan option, fan web should be 0.32 in. (8 mm) below top of orifice on the fan deck to top of the fan hub. Tighten set screws to 15 ± 2 ft-lb (20 ± 2.7 N•m). Fig. 53 shows the proper position of mounted fan.

IMPORTANT: Check for proper fan rotation (clockwise when viewed from above). If necessary, switch any 2 power leads to reverse fan rotation. The anti-rotation tab must be located to the left and adjacent to the motor mounting rod.

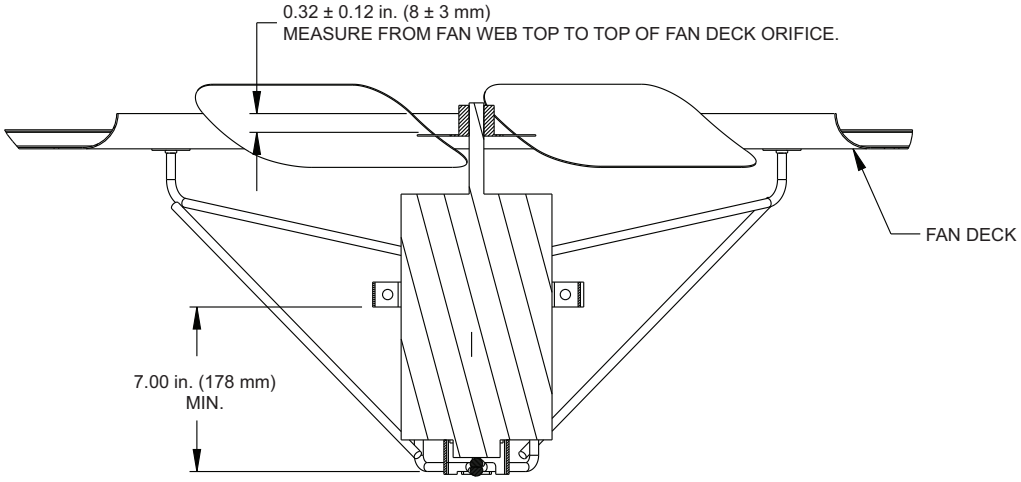

Fig. 53 — Metal (Value Sound) Fan Mounted Position

AEROACOUSTIC™ (LOW SOUND) FANS — Two designs have been used for this option and can be distinguished by the mounting bolt color. Two separate processes are used depending on the design revision. A shroud and a wire guard provide protection from the rotating fan.

> IMPORTANT: Check for proper fan rotation (counter-clockwise when viewed from above). If necessary, switch any 2 power leads to reverse fan rotation.

Gray Bolt — The fan motor shaft is protected from weather by grease and the fan cover. If fan motor must be removed for service or replacement, when reinstalling the motor be sure to mount the motor band in the proper location. Re-grease fan shaft and reinstall fan cover. The fan motor has a step in the motor shaft. For proper performance, fan should be positioned such that it is securely seated on this step. See Fig. 54. Tighten bolt to 15 ± 2 ft-lb (20 ± 2.7 N•m). Figure 54 shows the proper position of mounted fan.

Black Bolt — To remove the fan, a fan puller will likely be needed. The fan motor shaft is protected from weather by the fan cover. If fan motor must be removed for service or replacement, when reinstalling the motor be sure to mount the motor band in the proper location. Do not use grease on the shaft or key. The fan motor has a step in the motor shaft. For proper performance, fan should be positioned such that it is securely seated on this step. Apply Loctite 680 Retaining Compound to the hub and motor keyway only just prior to installing the key. See Fig. 55 and 56. Tighten bolt to 24 ± 2 ft-lb (32.5 ± 2.7 N•m). Fig. 57 shows the proper position of mounted fan.

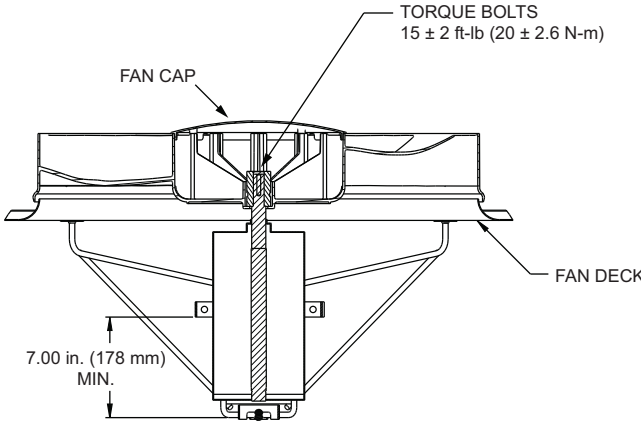

Fig. 54 — AeroAcoustic Fan (Gray Bolt) Mounted Position

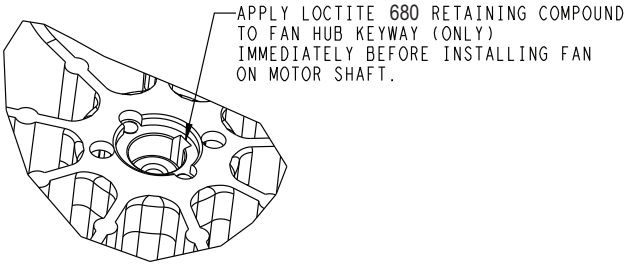

Fig. 55 — AeroAcoustic Fan (Black Bolt) Fan Hub Keyway

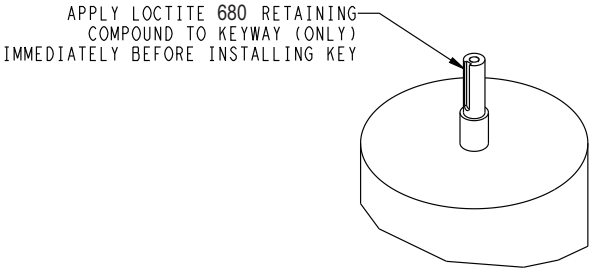

Fig. 56 — AeroAcoustic Fan (Black Bolt) Fan Motor Keyway

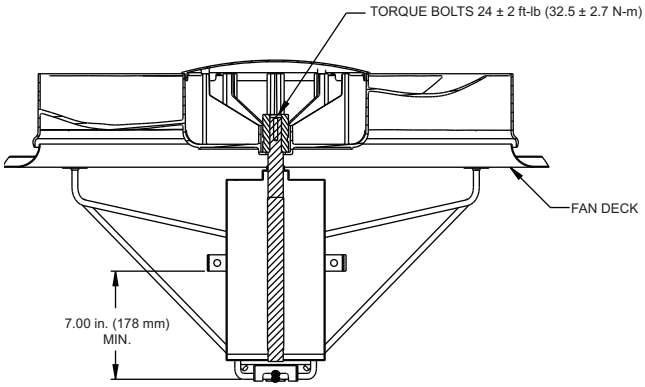

Fig. 57 — AeroAcoustic Fan (Black Bolt) Mounted Position

Motormaster® V Controller — The Motormaster V (MMV) controller is standard on size 010 and 015 units. For other sizes, the optional or accessory Motormaster V controller uses an input signal from the AUX board. See Fig. 58. The controller is factory configured and requires no field programming. If a situation arises where the drive does not function properly, the information provided below and in Table 40 can be used to troubleshoot the drive.

⚠ WARNING

Hazard of electrical shock. Wait three minutes after disconnecting incoming power before servicing drive. Capacitors retain charge after power is removed. Drive assembly includes externally mounted current limiting resistors. Use extreme caution when servicing the drive. Failure to comply may result in personal injury.

⚠ WARNING

When configured as shown in this literature, this equipment is designed to start when it receives line power. Ensure that all personnel are clear of fans and guards are installed before applying power. Failure to comply may result in personal injury.

⚠ WARNING

The opening of a branch-circuit protective device may be an indication that a fault has been interrupted. To reduce the risk of fire or electric shock, current carrying parts and other components of the controller should be examined and replaced if damaged.

⚠ CAUTION

DO NOT connect incoming AC power to output terminals T1, T2, and T3. Severe damage to the drive will result. Do not continuously cycle input power to the drive more than once every two minutes. Damage to the drive will result.

⚠ CAUTION

If input power has not been applied to the drive for a period of time exceeding three years (due to storage, etc.), the electrolytic DC bus capacitors within the drive can change internally, resulting in excessive leakage current. This can result in premature failure of the capacitors if the drive is operated after such a long period of inactivity or storage. In order to reform the capacitors and prepare the drive for operation after a long period of inactivity, apply input power to the drive for 8 hours prior to actually operating the motor. Before attempting to operate the drive, motor, and driven equipment, be sure all procedures pertaining to installation and wiring have been properly followed. Failure to comply may result in equipment damage.

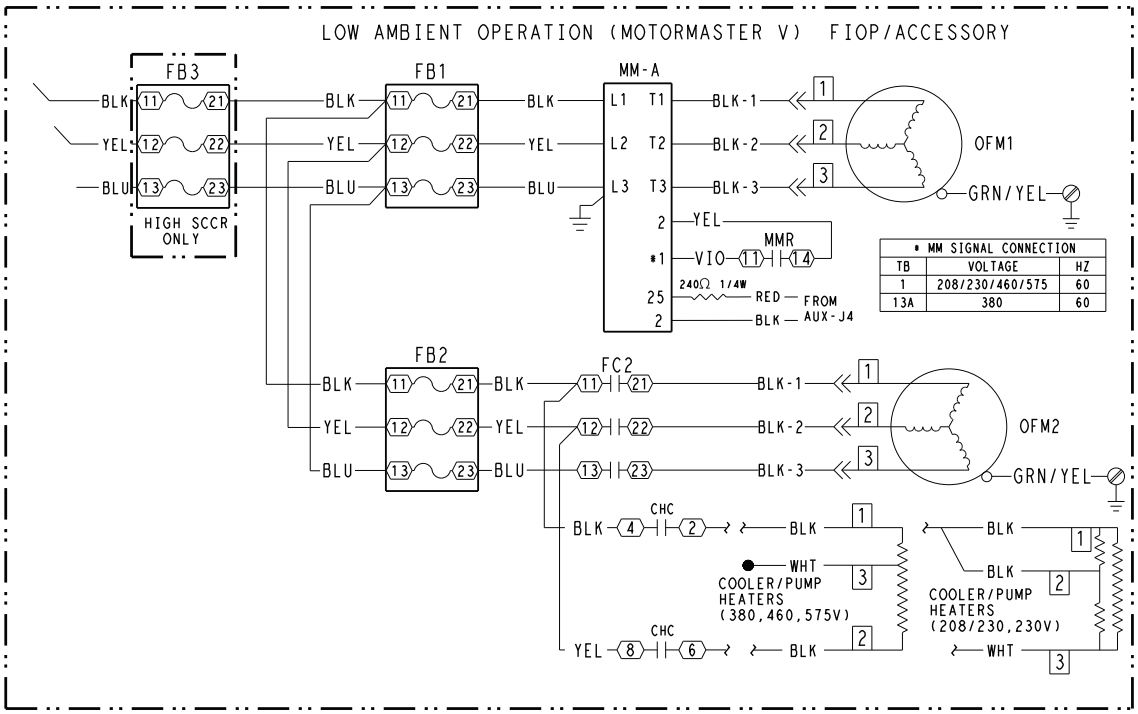

LEGEND

AUX — Auxiliary
CHC — Cooler Heater Contactor
FB — Fuse Block
MM — Motormaster
MMR — Motormaster Relay
OFM — Outdoor Fan Motor
SCCR — Short Circuit Current Rating
TB — Terminal Block

CONFIGURATION TABLE

MODE	NOMINAL VOLTAGE	Hz	CONTROL INPUT (PINS 25, 2)	START JUMPER
5	208/230/460/575*	60	External control 4-20 mA	TB1-TB2
6	208/380	60	External control 4-20 mA	TB13A-TB2
	380/415-50	50	External control 4-20 mA	TB13C-TB2

*208-v can run in mode 5 or 6.

Fig. 58 — Typical Motormaster Wiring

Table 40 — Fault Codes

FAULT CODE	DESCRIPTION	SOLUTION
AF	High Temperature Fault: Ambient temperature is too high; Cooling fan has failed (if equipped).	Check cooling fan operation
CF	Control Fault: A blank EPM, or an EPM with corrupted data has been installed.	Perform a factory reset using Parameter 48 — PROGRAM SELECTION.
cF	Incompatibility Fault: An EPM with an incompatible parameter version has been installed.	Either remove the EPM or perform a factory reset (Parameter 48) to change the parameter version of the EPM to match the parameter version of the drive.
CL	CURRENT LIMIT: The output current has exceeded the CURRENT LIMIT setting (Parameter 25) and the drive is reducing the output frequency to reduce the output current. If the drive remains in CURRENT LIMIT too long, it can trip into a CURRENT OVERLOAD fault (PF).	Check for loose electrical connections. Check for faulty condenser fan motor. Check Parameter P25 from Table 41 is set correctly.
ER	ERROR: Invalid data has been entered or an invalid command was attempted.	
GF	Data Fault: User data and OEM defaults in the EPM are corrupted.	Restore factory defaults P48, see section above. If that does not work, replace EPM.
HF	High DC Bus Voltage Fault: Line voltage is too high; Deceleration rate is too fast; Overhauling load.	Check line voltage — set P01 appropriately.
JF	Serial Fault: The watchdog timer has timed out, indicating that the serial link has been lost.	Check serial connection (computer). Check settings for P15. Check settings in communication software to match P15.
LC	FAULT LOCKOUT: The drive has failed three restart attempts and requires a manual reset.	
LF	Low DC Bus Voltage Fault: Line voltage is too low.	Check line voltage — set P01 appropriately.
OF	Output Transistor Fault: Phase to phase or phase to ground short circuit on the output; Failed output transistor; Boost settings are too high; Acceleration rate is too fast.	Reduce boost or increase acceleration values. If unsuccessful, replace drive.
PF	Current Overload Fault: VFD is undersized for the application; Mechanical problem with the driven equipment.	Check line voltage — set P01 appropriately. Check for dirty coils. Check for motor bearing failure.
SF	Single-phase Fault: Single-phase input power has been applied to a three-phase drive.	Check input power phasing.
SP	START PENDING: "SP" blinks during the interval between restart attempts.	
F1	EPM Fault: The EPM is missing or damaged.	
F2-F9, Fo	Internal Faults: The control board has sensed a problem.	Consult factory.
Drive display = 60.0 even though it is cold outside and it should be running slower	Feedback signal is above set point.	Check for proper set point. Check liquid line pressure.
Drive display = "---" even though drive should be running	Start jumper is missing.	Replace start jumper. See section above.
Drive display = 8.0 even though fan should be running faster	Feedback signal is below set point and fan is at minimum speed.	Check for proper set point. Check liquid line pressure.
VFD flashes 57 and LCS	Feedback or speed signal lost. Drive will operate at 57 Hz until reset or loss of start command. Resetting requires cycling start command (or power).	In stand alone mode: Check transducer wiring and feedback voltage. Feedback voltage displayed on P-69. Pin 6 should be 5 v output. Pin 5 (feedback) should be somewhere between 0 and 5 v.

LEGEND

EPM — Electronic Programming Module
LCS — Lost Control Signal
OEM — Original Equipment Manufacturer
VFD — Variable Frequency Drive

GENERAL OPERATION — The speed varies in proportion to a 0 to 10 vdc signal produced by the *Comfort*Link controls. The MMV output speed is displayed in Hz.

The *Comfort*Link controls must be configured for MMV operation in order for it to operate. This is configured under the Configuration menu (***Configuration→MM→MMR.S***) and selecting "1=LOW AMBIENT." This configuration menu also contains the gains and minimum speed for the Motormaster control logic.

CONFIGURATION — The MMV is configured for 1 of 12 operation modes based on the inputs to the control terminal block. The 30RAP units use operating modes 5-8. In these configurations, the MMV follows a 4 to 20 mA speed reference signal present on terminals 25 (+) and 2 (-). The Aux board generates a 2 to 10 vdc signal that is converted to a 4 to 20 mA signal by means of a 240 Ω 1/4 w resistor in series with the positive (+) signal wire. One additional jumper is required to configure the drive for 50/60 Hz operation and input voltage. See Table 41 for proper inputs. Once the drive is powered, it will change to the mode selected according to the inputs. See Fig. 59.

Table 41 — Motormaster® V Program Parameters for Operating Modes

PARAMETERS	DESCRIPTION	MODE 5	MODE 6	MODE 7	MODE 8
P01	Line Voltage: 01 = low line, 02 = high line	01	02	01	02
P02	Carrier Freq: 01 = 4 kHz, 02 = 6 kHz, 03 = 8 kHz	01	01	01	01
P03	Startup mode: flying restart	06	06	06	06
P04	Stop mode: coast to stop	01	01	01	01
P05	Standard Speed source: 01= keypad, 04=4-20mA (NO PI), 05= R22, 06=R134a	04	04	04	04
P06	TB-14 output: 01 = none	01	01	01	01
P08	TB-30 output: 01 = none	01	01	01	01
P09	TB-31 Output: 01 = none	01	01	01	01
P10	TB-13A function sel: 01 = none	01	01	01	01
P11	TB-13B function sel: 01 = none	01	01	01	01
P12	TB-13C function sel: 01 = none	01	01	01	01
P13	TB-15 output: 01 = none	01	01	01	01
P14	Control: 01 = Terminal strip	01	01	01	01
P15	Serial link: 02 = enabled 9600,8,N,2 with timer	02	02	02	02
P16	Units editing: 02 = whole units	02	02	02	02
P17	Rotation: 01 = forward only, 03 = reverse only	01	01	01	01
P19	Acceleration time: 10 sec	10	10	10	10
P20	Deceleration time: 10 sec	10	10	10	10
P21	DC brake time: 0	0	0	0	0
P22	DC BRAKE VOLTAGE 0%	0	0	0	0
P23	Min freq = 8 Hz ~ 100 – 160 rpm	8	8	8	8
P24	Max freq	60	60	50	50
P25	Current limit: (%)	125	110	125	110
P26	Motor overload: 100	100	100	100	100
P27	Base freq: 60 or 50 Hz	60	60	50	50
P28	Fixed boost: 0.5% at low frequencies	0.5	0.5	0.5	0.5
P29	Accel boost: 0%	0	0	0	0
P30	Slip compensation: 0%	0	0	0	0
P31	Preset spd #1: speed if loss of control signal	57	57	47	47
P32	Preset spd #2: 0	0	0	0	0
P33	Preset spd #3: 0	0	0	0	0
P34	Preset spd 4 default — R22 set point. TB12-2 open	18.0	18.0	18.0	18.0
P35	Preset spd 5 default — R134a set point. TB12-2 closed	12.6	12.6	12.6	12.6
P36	Preset spd 6 default	0	0	0	0
P37	Preset spd 7 default	0	0	0	0
P38	Skip bandwidth	0	0	0	0
P39	Speed scaling	0	0	0	0
P40	Frequency scaling 50 or 60 Hz	60	60	50	50
P41	Load scaling: default (not used so NA)	200	200	200	200
P42	Accel/decel #2: default (not used so NA)	60	60	60	60
P43	Serial address	1	1	1	1
P44	Password:111	111	111	111	111
P45	Speed at min signal: 8 Hz; used when PID mode is disabled and 4-20mA input is at 4 mA	8	8	8	8
P46	Speed at max feedback: 60 or 50 Hz. Used when PID disabled and 4-20mA input is at 20 mA	60	60	50	50
P47	Clear history? 01 = maintain. (set to 02 to clear)	01	01	01	01
P48	Program selection: Program 1 – 12	05	06	07	08
P61	PI Mode: 05= reverse, 0-5V, 01 = no PID	01	01	01	01
P62	Min feedback = 0 (0V *10)	0	0	0	0
P63	Max feedback = 50 (5V * 10)	50	50	50	50
P64	Proportional gain = 4%	4	4	4	4
P65	Integral gain = .2	.2	.2	.2	.2
P66	PI accel/decel (set point change filter) = 5	5	5	5	5
P67	Min alarm	0	0	0	0
P68	Max alarm	0	0	0	0
P69	0 - 10 VDC Feedback	NA	NA	NA	NA

LEGEND

NA — Not Applicable
PID — Proportional Integral Derivative
TB — Terminal Block

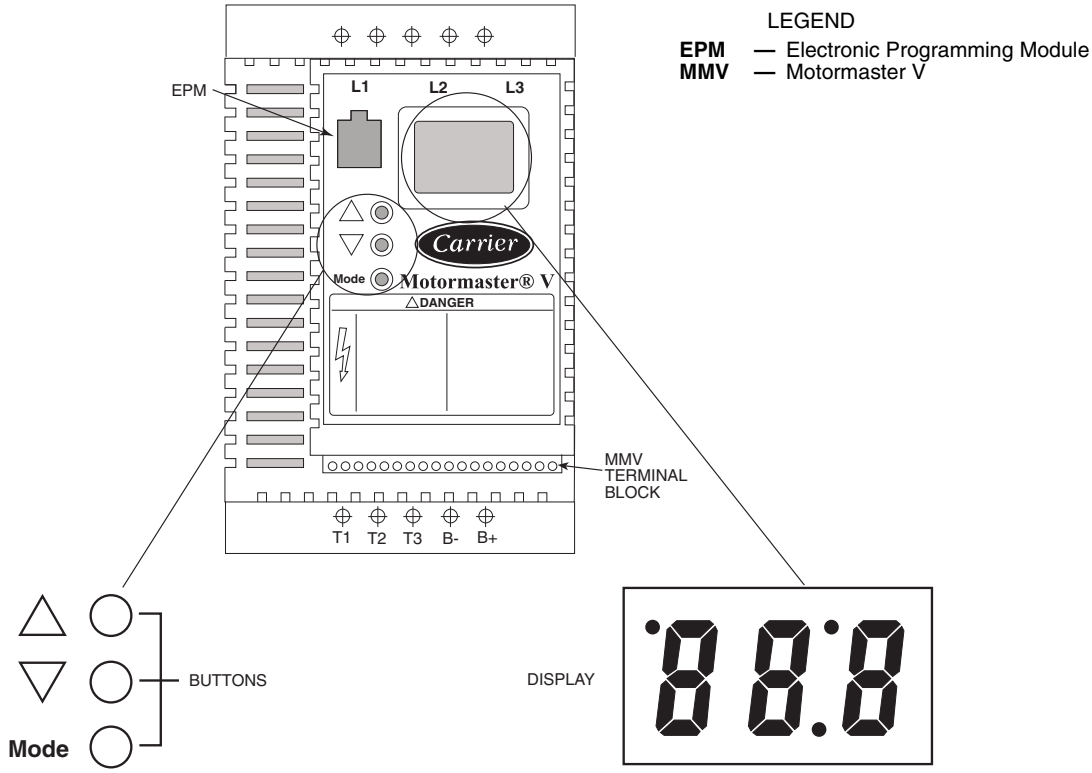

Fig. 59 — Motormaster® V Mode Buttons and Mode Display

DRIVE PROGRAMMING

⚠ CAUTION

It is strongly recommended that the user NOT change any programming without consulting Carrier service personnel. Unit damage may occur from improper programming.

To change parameter values of the Motormaster V controller:

1. To enter the PROGRAM mode to access the parameters, press the Mode button. This will activate the password prompt (if the password has not been disabled). The display will read "00" and the upper right-hand decimal point will be blinking. See Fig. 59.
2. Use the up and down arrow buttons to scroll to the password value (the factory default password is 111) and press the Mode button to accept the value.
3. Once the correct password value is entered, the display will read P01, which indicates that the PROGRAM mode has been accessed. P01 is the first parameter.

   NOTE: If the display flashes "Er," the password was incorrect and the process to enter the password must be repeated.
4. Use the up and down arrow buttons to scroll to the desired parameter number.
5. Once the desired parameter number is found, press the Mode button to display the present parameter setting. The upper right-hand decimal point will begin blinking, indicating that the present parameter setting is being displayed, and that it can be changed by using the up and down buttons. Use the up and down arrow buttons to change setting. Press Mode to store the new setting and exit the PROGRAM mode.
6. To change another parameter, press the Mode button again to re-enter the PROGRAM mode (the parameter menu will be accessed at the parameter that was last viewed or changed before exiting). If the Mode button is pressed within two minutes of exiting the PROGRAM mode, the password is not required to access the parameters. After two minutes, the password must be entered in order to access the parameters again.

The drive uses an electronic programming module (EPM) chip to store the program parameters. This is an EPROM memory chip and is accessible from the front of the Motormaster V. It should not be removed with power applied to the VFD. See Fig. 59.

Motormaster V Drive Password Configuration — Changing the password is not recommended. Once the password is changed, there is no means to retrieve the new password if it is lost. A new EPM chip must be installed.

To change password, follow the parameter changing instructions in the section Changing Motormaster V Parameters above. Change parameter P44 to the desired password. Setting P44 to 000 disables the password function. Valid range for the password is 000 to 999.

EPM CHIP — The drive uses a electronic programming module (EPM) chip to store the program parameters. This is an EEPROM memory chip and is accessible from the front of the VFD. It should not be removed with power applied to the VFD.

LOSS OF CCN COMMUNICATIONS — Carrier Comfort Network® (CCN) communications with external control systems can be affected by high frequency electrical noise generated by the Motormaster V controller. Ensure unit is well grounded to eliminate ground currents along communication lines.

Fault Codes — The drive is programmed to automatically restart after a fault and will attempt to restart three times after a fault (the drive will not restart after CF, cF, GF, F1, F2-F9, or Fo faults). If all three restart attempts are unsuccessful, the

drive will trip into FAULT LOCKOUT (LC), which requires a manual reset.

Manual Reset — If fault condition has been removed, cycle power to the chiller to reset the VFD.

Troubleshooting — Troubleshooting the Motormaster® V control requires a combination of observing system operation and VFD information. The drive provides 2 kinds of troubleshooting modes: a status matrix using the 3-digit display (P57, P58) and real time monitoring of key inputs and outputs. The collective group is displayed through parameters 50 to 60 and all values are read-only.

- **P50: FAULT HISTORY —** Last 8 faults
- **P51: SOFTWARE version**
- **P52: DC BUS VOLTAGE —** in percent of nominal. Usually rated input voltage x 1.4
- **P53: MOTOR VOLTAGE —** in percent of rated output voltage
- **P54: LOAD —** in percent of drives rated output current rating
- **P55: VDC INPUT —** in percent of maximum input: 100 will indicate full scale which is 5 v
- **P56: 4-20 mA INPUT —** in percent of maximum input. 20% = 4 mA, 100% = 20 mA

Manual Starter Trip — If the VFD manual starter (MS-FC-HS, MS-FC-A1 or MS-FC-B1 depending on model) trips, locate the inrush current protectors (3 round black disks per motor) and verify their resistance. For units operating at 208 v or 230 v, these devices should measure approximately 7 ohms. For all other voltages, they should measure approximately 20 ohms. Check value with mating plug disconnected, power to chiller off and at ambient temperature (not hot immediately after stopping VFD). These are standard resistances at 77 F (25 C). Resistance values decrease at higher temperatures and increase at lower temperatures.

REPLACING DEFECTIVE MODULES — The *Comfort*-Link replacement modules are shown in Table 42. If the main base board (MBB) has been replaced, verify that all configuration data is correct. Follow the ***Configuration*** mode table and verify that all items under sub-modes ***UNIT***, ***OPT1*** and ***OPT2*** are correct. Any additional field-installed accessories or options (***RSET***, ***SLCT*** sub-modes) should also be verified as well as any specific time and maintenance schedules.

Refer to the Start-Up Checklist for 30RAP Liquid Chiller (completed at time of original start-up) found in the job folder. This information is needed later in this procedure. If the checklist does not exist, fill out the current information in the Configuration mode on a new checklist. Tailor the various options and configurations as needed for this particular installation.

⚠ WARNING

Electrical shock can cause personal injury and death. Shut off all power to this equipment during installation. There may be more than one disconnect switch. Tag all disconnect locations to alert others not to restore power until work is completed.

1. Check that all power to unit is off. Carefully disconnect all wires from the defective module by unplugging its connectors.
2. Remove the defective module by removing its mounting screws with a Phillips screwdriver, and removing the module from the control box. Save the screws for later use.
3. Verify that the instance jumper (MBB) or address switches (all other modules) exactly match the settings of the defective module.

   NOTE: Handle boards by mounting standoffs only to avoid electrostatic discharge.
4. Package the defective module in the carton of the new module for return to Carrier.
5. Mount the new module in the unit's control box using a Phillips screwdriver and the screws saved in Step 2. See Table 42 for replacement module part numbers.
6. Reinstall all module connectors. For accessory Navigator™ display replacement, make sure the plug is installed at TB3 in the LEN connector.
7. Carefully check all wiring connections before restoring power.
8. Verify the Enable/Off/Remote Control switch is in the OFF position.
9. Restore control power. Verify that all module red LEDs blink in unison. Verify that all green LEDs are blinking and that the scrolling marquee or Navigator display is communicating correctly.
10. Verify all configuration information, settings, set points, and schedules. Return the Enable/Off/Remote Control switch to its previous position.

Table 42 — Replacement Modules

MODULE	REPLACEMENT PART NO. (WITH SOFTWARE)	REPLACEMENT PART NO. (WITHOUT SOFTWARE)
MAIN BASE BOARD (MBB)	30RA502134	HK50AA029
SCROLLING MARQUEE DISPLAY	HK50AA031	HK50AA030
ENERGY MANAGEMENT MODULE (EMM)	30GT515218	HK50AA028
NAVIGATOR DISPLAY	HK50AA033	N/A
EXV	30GT515217	HK50AA026
AUX	32GB500442E	N/A
CXB	30GT515219	HK50AA027

Hydronic Package — If the unit is equipped with a factory-installed hydronic package, consult the information below for proper maintenance and service. In addition to this information, each factory-installed hydronic package is supplied with a packet of information supplied by the manufacturer, Bell & Gossett. Carrier Corporation strongly recommends that this information be thoroughly reviewed prior to operation of the chiller.

PUMP PERFORMANCE CHECK — The factory-installed pumps in the 30RAP units are shipped with a single impeller size available for that pump. The pump was selected based on the flow and head requirements as provided to Carrier. It is not uncommon for actual pump duty to be different than what was anticipated at time of selection. In many cases, it may be desirable to make some field modifications to obtain optimum pump performance.

Before any pump modifications are made, it is recommended that actual pump performance be verified and compared to the applicable pump curve. See base unit installation instructions. This can be done in a variety of ways:

1. If pump impeller diameter is known:
   a. Connect a differential pressure gage across the pump at the ports provided on the pump volutes.
   b. Read GPM from applicable impeller curve.
2. If pump impeller diameter is not known:

   If pump impeller diameter has been trimmed and the size is not known, it is necessary to determine which impeller curve to read.

   The easiest way to confirm pump performance is to "dead-head" the pump and read the differential pressure across the pressure ports on the pump. "Dead-heading" can be done by shutting the circuit setter valve on the discharge side of the pump.

   NOTE: Although not all pumps can be safely "dead-headed," centrifugal pumps (such as on the 30RAP units) can be "dead-headed" for short amounts of time. It is recommended to keep the time short due to excessive heat build-up in the pump.

   Since the "dead-head" condition is a no-flow condition, the head will correspond to the intersection of an impeller curve with the vertical axis of the pump chart. The correct impeller diameter is that which corresponds to the measured head.
3. Once the impeller diameter is known, proceed as in Step 1.
4. Water flow rate can be determined by using a differential pressure gage with the Bell & Gossett circuit setter balance valve calculator or Armstrong Circuit Balancing Valve Slide Rule. (This information is also provided in the installation instructions.) This method will not directly measure pressure differential seen by the pump, but can be used to "double-check" the pump measurement.
5. Verify that cable connections at the switch and at the terminal block are secure.
6. For factory-installed hydronic system, verify that:
   - All air has been purged from the system.
   - Circuit setter balance valve has been correctly set.
7. Pump impeller has been improperly trimmed and is not providing sufficient flow.
8. Wrong pump motor rotation. Pump must rotate clockwise when viewed from motor end of pump.

PUMP MODIFICATIONS AND IMPELLER TRIMMING — See applicable section in the Installation instructions.

RESET OF CHILLER WATER FLOW — See applicable section in the Installation instructions.

CHANGING OF PUMP SEALS — See service instruction manual provided with the hydronic package.

VFD OPERATION — For units with factory-installed VFD (variable frequency drive) option, see service instruction manual provided with the hydronic package. Default password is 00002323.

MAINTENANCE

Recommended Maintenance Schedule — The following are only recommended guidelines. Jobsite conditions may dictate that maintenance schedule is performed more often than recommended.

Routine:
- Periodic clean water rinse, especially in coastal and industrial applications.
- Check condenser coils for debris, clean as necessary.

Every month:
- Check moisture indicating sight glass for possible refrigerant loss and presence of moisture.

Every 3 months (for all machines):
- Check refrigerant charge.
- Check all refrigerant joints and valves for refrigerant leaks, repair as necessary.
- Check chilled water flow switch operation.
- Check all condenser fans for proper operation.
- Check compressor oil level.
- Check crankcase heater operation if equipped.

Every 6 months:
- Check chilled water flow switch sensor tip for buildup. Clean if necessary. See page page 67.

Every 12 months (for all machines):
- Check all electrical connections, tighten as necessary.
- Inspect all contactors and relays, replace as necessary.
- Check accuracy of thermistors, replace if greater than ± 2° F (1.2° C) variance from calibrated thermometer.
- Check to be sure that the proper concentration of antifreeze is present in the chilled water loop, if applicable.
- Verify that the chilled water loop is properly treated.
- Check refrigerant filter driers for excessive pressure drop, replace as necessary.
- Check chilled water strainers, clean as necessary.
- Check cooler heater operation, if equipped.
- Check condition of condenser fan blades and that they are securely fastened to the motor shaft.
- Perform Service Test to confirm operation of all components.
- Check for excessive cooler approach (Leaving Chilled Water Temperature — Saturated Suction Temperature) which may indicate fouling. Clean cooler vessel if necessary.

Condenser Coil Maintenance and Cleaning Recommendations — Routine cleaning of coil surfaces is essential to maintain proper operation of the unit. See the following sections:
- MCHX condenser coils — See page 61.
- RTPF condenser coils — See page 61.

Control Box Maintenance — The control panel for 30RAP100-150 208/230 v and 380 v units has two 24-v fans installed at the right side of the panel to modulate the inside temperature of the control box. These two fans are controlled by a temperature switch. The temperature switch closes at 120 F and opens at 105 F. The inlet filter is located at the left side of the control box. Inspect the inlet filter and fan outlet screen every three months, clean as needed.

TROUBLESHOOTING

Complete Unit Stoppage and Restart — Possible causes for unit stoppage and reset methods are shown below and in Table 43. Refer to Fig. 3-19 for component arrangement and control wiring diagrams.

GENERAL POWER FAILURE — After power is restored, restart is automatic through normal MBB start-up.

UNIT ENABLE-OFF-REMOTE CONTROL SWITCH IS OFF — When the switch is OFF, the unit will stop immediately. Place the switch in the ENABLE position for local switch control or in the Remote Control position for control through Remote Control closure.

CHILLED FLUID PROOF-OF-FLOW SWITCH OPEN — After the problem causing the loss of flow has been corrected, reset is manual by resetting the alarm with the scrolling marquee as shown in Table 44.

OPEN 24-V CONTROL CIRCUIT BREAKER(S) — Determine the cause of the failure and correct. Reset circuit breaker(s). Restart is automatic after MBB start-up cycle is complete.

COOLING LOAD SATISFIED — Unit shuts down when cooling load has been satisfied. Unit restarts when required to satisfy leaving fluid temperature set point.

THERMISTOR FAILURE — If a thermistor fails in either an open or shorted condition, the unit will be shut down. Replace EWT, LWT, or OAT as required. Unit restarts automatically, but must be reset manually by resetting the alarm with the scrolling marquee as shown in Table 44.

⚠ CAUTION

If unit stoppage occurs more than once as a result of any of the safety devices listed, determine and correct cause before attempting another restart.

Table 43 — Troubleshooting

SYMPTOMS	CAUSE	REMEDY
Cooler Circulating Pump Does Not Run	Power line open	Reset circuit breaker.
	Control fuse or circuit breaker open	Check control circuit for ground or short. Reset breaker and replace fuse.
	Tripped power breaker	Check the controls. Find the cause of trip and reset breaker.
	Loose terminal connection	Check connections.
	Improperly wired controls	Check wiring and rewire if necessary.
	Low line voltage	Check line voltage — determine location of voltage drop and remedy deficiency.
	Pump motor defective	Check motor winding for open or short. Replace compressor if necessary.
	Pump seized	Replace pump.
Compressor Cycles Off on Loss of Charge	Low refrigerant charge	Repair leak and recharge.
Compressor Cycles Off on Cooler Freeze Protection	Thermistor failure	Replace thermistor.
	System load was reduced faster than controller could remove stages	Unit will restart after fluid temperature rises back into the control band. Avoid rapidly removing system load.
Compressor Shuts Down on High-Pressure Control	High-pressure control acting erratically	Replace control.
	Noncondensables in system	Evacuate and recharge.
	Condenser dirty	Clean condenser.
	Fans not operating	Repair or replace if defective.
	System overcharged with refrigerant	Reduce charge.
Unit Operates Too Long or Continuously	Low refrigerant charge	Add refrigerant.
	Control contacts fused	Replace control.
	Partially plugged or plugged expansion valve or filter drier	Clean or replace as needed.
	Defective insulation	Replace or repair as needed.
	Damaged compressor	Check compressor and replace if necessary.
Unusual or Loud System Noises	Piping vibration	Support piping as required.
		Check for loose pipe connections or damaged compressor.
	Compressor noisy	Replace compressor (worn bearings).
		Check for loose compressor holddown bolts.
Compressor Loses Oil	Leak in system	Repair leak.
	Mechanical damage (Failed seals or broken scrolls)	Replace compressor.
	Oil trapped in line	Check piping for oil traps.
Hot Liquid Line	Shortage of refrigerant due to leak	Repair leak and recharge.
Frosted Liquid Line	Restricted filter drier	Replace filter drier.
Frosted Suction Line	Expansion valve admitting excess refrigerant (note: this is a normal condition for brine applications)	Replace valve if defective.
	Stuck EXV (electronic expansion valve)	Replace valve if defective.
Freeze-Up	Improper charging	Make sure a full quantity of fluid is flowing through the cooler while charging, and suction pressure in cooler is equal to or greater than pressure corresponding to 32 F (0° C).
	System not drained for winter shutdown	Recommended that system be filled with an appropriate glycol mixture to prevent freezing of pumps and fluid tubing.
	Loose thermistor	Verify thermistors are fully inserted in wells.

Table 44 — Alarm and Alert Codes

ALARM/ ALERT CODE	ALARM OR ALERT	DESCRIPTION	WHY WAS THIS ALARM GENERATED?	ACTION TAKEN BY CONTROL	RESET METHOD	PROBABLE CAUSE
P051	Pre-Alert	Circuit A, Compressor 1 Failure	Compressor feedback signal does not match relay state	Compressor A1 Shut down for 5 minutes	Automatic	High-pressure switch open, solid-state motor protection module, internal overload open, faulty CSB, loss of condenser air, filter drier plugged, non-condensables, operation beyond capability.
P052	Pre-Alert	Circuit A, Compressor 2 Failure	Compressor feedback signal does not match relay state	Compressor A2 Shut down for 5 minutes	Automatic	High-pressure switch open, solid-state motor protection module, internal overload open, faulty CSB, loss of condenser air, filter drier plugged, non-condensables, operation beyond capability.
P053	Pre-Alert	Circuit A, Compressor 3 Failure	Compressor feedback signal does not match relay state	Compressor A3 Shut down for 5 minutes	Automatic	High-pressure switch open, solid-state motor protection module, internal overload open, faulty CSB, loss of condenser air, filter drier plugged, non-condensables, operation beyond capability.
P055	Pre-Alert	Circuit B, Compressor 1 Failure	Compressor feedback signal does not match relay state	Compressor B1 Shut down for 5 minutes	Automatic	High-pressure switch open, solid-state motor protection module, internal overload open, faulty CSB, loss of condenser air, filter drier plugged, non-condensables, operation beyond capability.
P056	Pre-Alert	Circuit B, Compressor 2 Failure	Compressor feedback signal does not match relay state	Compressor B2 Shut down for 5 minutes	Automatic	High-pressure switch open, solid-state motor protection module, internal overload open, faulty CSB, loss of condenser air, filter drier plugged, non-condensables, operation beyond capability.
P057	Pre-Alert	Circuit B, Compressor 3 Failure	Compressor feedback signal does not match relay state	Compressor B3 Shut down for 5 minutes	Automatic	High-pressure switch open, solid-state motor protection module, internal overload open, faulty CSB, loss of condenser air, filter drier plugged, non-condensables, operation beyond capability.
T051	Alert	Circuit A, Compressor 1 Failure	3 consecutive P051 Pre-Alerts without compressor feedback signal matching relay state.	Compressor A1 shut down.	Manual	High-pressure switch open, solid-state motor protection module, internal overload open, faulty CSB, loss of condenser air, filter drier plugged, non-condensables, operation beyond capability.
A051	Alarm	Circuit A, Compressor 1 Stuck On Failure	CSB reads ON while the compressor relay has been commanded OFF	Compressor A1 shut down	Manual	Welded compressor contactor, welded relay output on MBB or CXB, failed CSB or wiring error.
	Alarm	Circuit A, Compressor 1 Chattering Contactor	CSB reads current/no current/ current/no current cycling in any 16 second window.	Compressor A1 shut down	Manual	Refrigerant charge, wiring error, plugged condenser coil, condenser fan motor failure.
T052	Alert	Circuit A, Compressor 2 Failure	3 consecutive P052 Pre-Alerts without compressor feedback signal matching relay state.	Compressor A2 shut down.	Manual	High-pressure switch open, solid-state motor protection module, internal overload open, faulty CSB, loss of condenser air, filter drier plugged, non-condensables, operation beyond capability.
A052	Alarm	Circuit A, Compressor 2 Stuck On Failure	CSB reads ON while the compressor relay has been commanded OFF	Compressor A2 shut down	Manual	Welded compressor contactor, welded relay output on MBB or CXB, failed CSB or wiring error.
	Alarm	Circuit A, Compressor 2 Chattering Contactor	CSB reads current/no current/ current/no current cycling in any 16 second window.	Compressor A2 shut down	Manual	Refrigerant charge, wiring error, plugged condenser coil, condenser fan motor failure.
T053	Alert	Circuit A, Compressor 3 Failure	3 consecutive P053 Pre-Alerts without compressor feedback signal matching relay state.	Compressor A3 shut down.	Manual	High-pressure switch open, solid-state motor protection module, internal overload open, faulty CSB, loss of condenser air, filter drier plugged, non-condensables, operation beyond capability.
A053	Alarm	Circuit A, Compressor 3 Stuck On Failure	CSB reads ON while the compressor relay has been commanded OFF	Compressor A3 shut down	Manual	Welded compressor contactor, welded relay output on MBB or CXB, failed CSB or wiring error.
	Alarm	Circuit A, Compressor 3 Chattering Contactor	CSB reads current/no current/ current/no current cycling in any 16 second window.	Compressor A3 shut down	Manual	Refrigerant charge, wiring error, plugged condenser coil, condenser fan motor failure.

See Legend on page 82.

Table 44 —Alarm and Alert Codes (cont)

ALARM/ ALERT CODE	ALARM OR ALERT	DESCRIPTION	WHY WAS THIS ALARM GENERATED?	ACTION TAKEN BY CONTROL	RESET METHOD	PROBABLE CAUSE
T055	Alert	Circuit B, Compressor 1 Failure	3 consecutive P055 Pre-Alerts without compressor feedback signal matching relay state.	Compressor B1 shut down.	Manual	High-pressure switch open, solid-state motor protection module, internal overload open, faulty CSB, loss of condenser air, filter drier plugged, non-condensables, operation beyond capability.
A055	Alarm	Circuit B, Compressor 1 Stuck On Failure	CSB reads ON while the compressor relay has been commanded OFF	Compressor B1 shut down	Manual	Welded compressor contactor, welded relay output on MBB or CXB, failed CSB or wiring error.
	Alarm	Circuit B, Compressor 1 Chattering Contactor	CSB reads current/no current/current/no current cycling in any 16 second window.	Compressor B1 shut down	Manual	Refrigerant charge, wiring error, plugged condenser coil, condenser fan motor failure.
T056	Alert	Circuit B, Compressor 2 Failure	3 consecutive P056 Pre-Alerts without compressor feedback signal matching relay state.	Compressor B2 shut down.	Manual	High-pressure switch open, solid-state motor protection module, internal overload open, faulty CSB, loss of condenser air, filter drier plugged, non-condensables, operation beyond capability.
A056	Alarm	Circuit B, Compressor 2 Stuck On Failure	CSB reads ON while the compressor relay has been commanded OFF	Compressor B2 shut down	Manual	Welded compressor contactor, welded relay output on MBB or CXB, failed CSB or wiring error.
	Alarm	Circuit B, Compressor 2 Chattering Contactor	CSB reads current/no current/current/no current cycling in any 16 second window.	Compressor B2 shut down	Manual	Refrigerant charge, wiring error, plugged condenser coil, condenser fan motor failure.
T057	Alert	Circuit B, Compressor 3 Failure	3 consecutive P057 Pre-Alerts without compressor feedback signal matching relay state.	Compressor B3 shut down.	Manual	High-pressure switch open, solid-state motor protection module, internal overload open, faulty CSB, loss of condenser air, filter drier plugged, non-condensables, operation beyond capability.
A057	Alarm	Circuit B, Compressor 3 Stuck On Failure	CSB reads ON while the compressor relay has been commanded OFF	Compressor B3 shut down	Manual	Welded compressor contactor, welded relay output on MBB or CXB, failed CSB or wiring error.
	Alarm	Circuit B, Compressor 3 Chattering Contactor	CSB reads current/no current/current/no current cycling in any 16 second window.	Compressor B3 shut down	Manual	Refrigerant charge, wiring error, plugged condenser coil, condenser fan motor failure.
A060	Alarm	Cooler Leaving Fluid Thermistor Failure	Thermistor outside range of –40 to 245 F (–40 to 118 C)	Chiller shut down immediately	Automatic	Thermistor failure, damaged cable/wire or wiring error.
A061	Alarm	Cooler Entering Fluid Thermistor Failure	Thermistor outside range of –40 to 245 F (–40 to 118 C)	Chiller shut down immediately	Automatic	Thermistor failure, damaged cable/wire or wiring error.
T068	Alert	Circuit A Return Gas Thermistor Failure	Return gas thermistor is outside range of –40 to 245 F (–40 to 118 C)	Circuit A shut down	Automatic	Thermistor failure, damaged cable/wire or wiring error.
T069	Alert	Circuit B Return Gas Thermistor Failure	Return gas thermistor is outside range of –40 to 245 F (–40 to 118 C)	Circuit B shut down	Automatic	Thermistor failure, damaged cable/wire or wiring error.
T073	Alert	Outside Air Thermistor Failure	Thermistor outside range of –40 to 245 F (–40 to 118 C)	Temperature reset disabled. Chiller runs under normal control/set points. When capacity reaches 0, cooler/pump heaters are energized.	Automatic	Thermistor failure, damaged cable/wire or wiring error.
T074	Alert	Space Temperature/Dual Chiller Thermistor Failure	Thermistor outside range of –40 to 245 F (–40 to 118 C)	Temperature reset disabled. Chiller runs under normal control/set points.	Automatic	Thermistor failure, damaged cable/wire or wiring error.
T077	Alert	Circuit A Saturated Suction Temperature exceeds Cooler Leaving Fluid Temperature	Saturated suction temperature is greater than leaving fluid temperature for 5 minutes.	Circuit A shutdown	Manual	Faulty expansion valve or suction pressure transducer or leaving fluid thermistor.
T078	Alert	Circuit B Saturated Suction Temperature exceeds Cooler Leaving Fluid Temperature	Saturated suction temperature is greater than leaving fluid temperature for 5 minutes.	Circuit B shutdown	Manual	Faulty expansion valve or suction pressure transducer or leaving fluid thermistor.
T079	Alert	Lead/Lag LWT Thermistor Failure	Thermistor outside range of –40 to 245 F (–40 to 118 C)	Chiller runs as a stand alone machine	Automatic	Dual LWT thermistor failure, damaged cable/wire or wiring error.
T090	Alert	Circuit A Discharge Pressure Transducer Failure	Outside of range (0 to 667 psig)	Circuit A shut down	Automatic	Transducer failure, poor connection to MBB, or wiring damage/error.
T091	Alert	Circuit B Discharge Pressure Transducer Failure	Outside of range (0 to 667 psig)	Circuit B shut down	Automatic	Transducer failure, poor connection to MBB, or wiring damage/error.
T092	Alert	Circuit A Suction Pressure Transducer Failure	Outside of range (0 to 420 psig)	Circuit A shut down	Automatic	Transducer failure, poor connection to MBB, or wiring damage/error.

See Legend on page 82.

Table 44 —Alarm and Alert Codes (cont)

ALARM/ ALERT CODE	ALARM OR ALERT	DESCRIPTION	WHY WAS THIS ALARM GENERATED?	ACTION TAKEN BY CONTROL	RESET METHOD	PROBABLE CAUSE
T093	Alert	Circuit B Suction Pressure Transducer Failure	Outside of range (0 to 420 psig)	Circuit B shut down	Automatic	Transducer failure, poor connection to MBB, or wiring damage/error.
T094	Alert	Discharge Gas Thermistor Failure	Discharge thermistor (DTT) is either open or shorted	Size 010,015 chiller shut down. Digital compressor shut down.	Automatic	Thermistor failure, damaged cable/wire or wiring error.
T110	Alert	Circuit A Loss of Charge	If the compressors are off and discharge pressure reading is < 26 psig for 30 sec.	Circuit not allowed to start.	Manual	Refrigerant leak or transducer failure
T111	Alert	Circuit B Loss of Charge	If the compressors are off and discharge pressure reading is < 26 psig for 30 sec.	Circuit not allowed to start.	Manual	Refrigerant leak or transducer failure
T112	Alert	Circuit A High Saturated Suction Temperature	Circuit saturated suction temperature pressure transducer > 70 F (21.1 C) for 5 minutes	Circuit shut down	Manual	Faulty Expansion valve, faulty suction pressure transducer or high entering fluid temperature.
T113	Alert	Circuit B High Saturated Suction Temperature	Circuit saturated suction temperature pressure transducer > 70 F (21.1 C) for 5 minutes	Circuit shut down	Manual	Faulty Expansion valve, faulty suction pressure transducer or high entering fluid temperature.
T114	Alert	Circuit A Low Suction Superheat	Suction superheat is less than 3° F (1.7 C) for 5 minutes.	Circuit A shut down.	Automatic restart after first daily occurrence. Manual restart thereafter.	Faulty expansion valve, faulty suction pressure transducer, faulty suction gas thermistor, circuit overcharged
T115	Alert	Circuit B Low Suction Superheat	Suction superheat is less than 3° F (1.7 C) for 5 minutes.	Circuit B shut down.	Automatic restart after first daily occurrence. Manual restart thereafter.	Faulty expansion valve, faulty suction pressure transducer, faulty suction gas thermistor, circuit overcharged
T116	Alert	Circuit A Low Cooler Suction Temperature	Mode 7 caused the compressor to unload 3 consecutive times with less than a 30-minute interval between each circuit shutdown.	Circuit shut down	Manual	Faulty expansion valve, low refrigerant charge, plugged filter drier, faulty suction pressure transducer, low cooler fluid flow, improper brine freeze set point
T117	Alert	Circuit B Low Cooler Suction Temperature	Mode 8 caused the compressor to unload 3 consecutive times with less than a 30-minute interval between each circuit shutdown.	Circuit shut down	Manual	Faulty expansion valve, low refrigerant charge, plugged filter drier, faulty suction pressure transducer, low cooler fluid flow, improper brine freeze set point
P118	Pre-Alert	High Discharge Gas Temperature	Discharge Thermistor (DTT) reading is greater than 250 F	Compressor A1 shut down	Automatic	Refrigerant charge, plugged filter drier, head pressure control.
T118/ A118	Alert	High Discharge Gas Temperature	3 Discharge Gas Temperature alerts occur within a day	Compressor A1 shut down	Manual	Refrigerant charge, plugged filter drier, head pressure control.
T126	Alert	Circuit A High Head Pressure	Compressor operation outside of operating envelope.	Circuit shut down	Automatic, only after first 3 daily occurrences. Manual reset thereafter. Reading from OAT sensor must drop 5 F (2.8 C) before restart	Faulty transducer, low/restricted condenser airflow, incorrect refrigerant charge, non-condensables, faulty condenser fan motor, faulty EXV.
T127	Alert	Circuit B High Head Pressure	Compressor operation outside of operating envelope.	Circuit shut down	Automatic, only after first 3 daily occurrences. Manual reset thereafter. Reading from OAT sensor must drop 5 F (2.8 C) before restart	Faulty transducer/ restricted condenser airflow, incorrect refrigerant charge, non-condensables, faulty condenser fan motor, faulty EXV.
T133	Alert	Circuit A Low Suction Pressure	Suction pressure below 34 psig for 8 seconds or below 23 psig	Circuit shut down	Automatic restart after first daily occurrence. Manual restart thereafter.	Faulty or sticking EXV, low refrigerant charge, plugged filter drier.

See Legend on page 82.

Table 44 —Alarm and Alert Codes (cont)

ALARM/ ALERT CODE	ALARM OR ALERT	DESCRIPTION	WHY WAS THIS ALARM GENERATED?	ACTION TAKEN BY CONTROL	RESET METHOD	PROBABLE CAUSE
T134	Alert	Circuit B Low Suction Pressure	Suction pressure below 34 psig for 8 seconds or below 23 psig	Circuit shut down	Automatic restart after first daily occurrence. Manual restart thereafter.	Faulty or sticking EXV, low refrigerant charge, plugged filter drier.
A140	Alarm	Reverse Rotation Detected	Suction pressure failed to drop when compressor is energized	Chiller not allowed to start.	Manual	Verify correct compressor rotation. Check for correct fan rotation first.
A150	Alarm	Unit is in Emergency Stop	CCN emergency stop command received	Chiller shutdown	Automatic once CCN command for EMSTOP returns to normal	CCN Network command.
A151	Alarm	Illegal Configuration	One or more illegal configurations exists.	Chiller is not allowed to start.	Manual once configuration errors are corrected	Configuration error. Check unit settings.
A152	Alarm	Unit Down Due to Failure	Both circuits are down due to alarms/alerts.	Chiller is unable to run.	Automatic once alarms/alerts are cleared that prevent the chiller from starting.	Alarm notifies user that chiller is 100% down.
T153	Alert	Real Time Clock Hardware Failure	Internal clock on MBB fails	Occupancy schedule will not be used. Chiller defaults to Local On mode.	Automatic when correct clock control restarts.	Time/Date/Month/ Day/Year not properly set.
A154	Alarm	Serial EEPROM Hardware Failure	Hardware failure with MBB	Chiller is unable to run.	Manual	Main Base Board failure.
T155	Alert	Serial EEPROM Storage Failure	Configuration/storage failure with MBB	No Action	Manual	Potential failure of MBB. Download current operating software. Replace MBB if error occurs again.
A156	Alarm	Critical Serial EEPROM Storage Failure	Configuration/storage failure with MBB	Chiller is not allowed to run.	Manual	Main Base Board failure.
A157	Alarm	A/D Hardware Failure	Hardware failure with peripheral device	Chiller is not allowed to run.	Manual	Main Base Board failure.
T170	Alert	Loss of communication with the Compressor Expansion Module	MBB cannot communicate with CXB	Compressor A1 shut down	Automatic	Wiring error, faulty wiring or failed CXB. Incorrect configuration.
A172	Alarm	Loss of Communication with EXV board	MBB loses communication with EXV board	Chiller is not allowed to run.	Automatic	Wiring error, faulty wiring or failed EXV board.
T173	Alert	Loss of Communication with EMM	MBB loses communication with EMM	4 to 20 mA temperature reset disabled. Demand Limit set to 100%. 4 to 20 mA set point disabled.	Automatic	Wiring error, faulty wiring or failed Energy Management Module (EMM).
T174	Alert	4 to 20 mA Cooling Set Point Input Failure	If configured with EMM and input less than 2 mA or greater than 22 mA	Set point function disabled. Chiller controls to CSP1.	Automatic	Faulty signal generator, wiring error, or faulty EMM.
T175	Alert	Loss of Communication with the AUX Board	MBB loses communication with AUX Board.	Chiller is not allowed to run.	Automatic	Wiring error, faulty wiring or failed AUX board, incorrect configuration.
T176	Alert	4 to 20 mA Temperature Reset Input Failure	If configured with EMM and input less than 2 mA or greater than 22 mA	Reset function disabled. Chiller returns to normal set point control.	Automatic	Faulty signal generator, wiring error, or faulty EMM.
T177	Alert	4 to 20 mA Demand Limit Input Failure	If configured with EMM and input less than 2 mA or greater than 22 mA	Demand limit function disabled. Chiller returns to 100% demand limit control.	Automatic	Faulty signal generator, wiring error, or faulty EMM.
A179	Alarm	Fan VFD Communication Failure	The MBB lost communication with the Danfoss VFD1 module.	Chiller shut down.	Automatic	Wrong VFD address, damaged communication cable, wiring error, no power to VFD, unresponsive VFD.
A189	Alarm	Cooler Pump Auxiliary Contact Inputs Miswired	Pump 1 Auxiliary Contacts are closed when Pump 2 output is energized or if Pump 2 Auxiliary Contacts are closed when Pump 1 output is energized.	Both pump outputs are turned off.	Automatic	Wiring error, faulty pump contactor auxiliary contacts.
T190	ALERT	Cooler Pump 1 Aux Contacts Failed to Close at Start-Up	Pump 1 Auxiliary Contacts did not close within 26 seconds after pump was started	Pump 1 turned off. Pump 2 will be started if available.	Manual	Wiring error, faulty contacts on pump contactor

See Legend on page 82.

Table 44 —Alarm and Alert Codes (cont)

ALARM/ ALERT CODE	ALARM OR ALERT	DESCRIPTION	WHY WAS THIS ALARM GENERATED?	ACTION TAKEN BY CONTROL	RESET METHOD	PROBABLE CAUSE
T191	ALERT	Cooler Pump 2 Aux Contacts Failed to Close at Start-Up	Pump 2 Auxiliary Contacts did not close within 26 seconds after pump was started	Pump 2 turned off. Pump 1 will be started if available.	Manual	Wiring error, faulty contacts on pump contactor
T192	Alert	Cooler Pump 1 Failed to Provide Flow at Start-Up	Pump 1 did not provide flow to close flow switch within 60 seconds	Pump 1 turned off. Pump 2 will be started if available.	Manual	Wiring error, pump circuit breaker tripped, contactor failure
T193	Alert	Cooler Pump 2 Failed to Provide Flow at Start-Up	Pump 2 did not provide flow to close flow switch within 60 seconds	Pump 1 turned off. Pump 2 will be started if available.	Manual	Wiring error, pump circuit breaker tripped, contactor failure
T194	Alert	Cooler Pump 1 Aux Contacts Opened During Normal Operation	Pump 1 Auxiliary Contacts open for 26 seconds after initially made. All compressors shut down. Pump 1 turned off.	Pump 2 will be started if available. Chiller allowed to run if Pump 2 successfully starts.	Manual	Wiring error, faulty contacts on pump contactor
T195	Alert	Cooler Pump 2 Aux Contacts Opened During Normal Operation	Pump 2 Auxiliary Contacts open for 26 seconds after initially made. All compressors shut down. Pump 2 turned off.	Pump 1 will be started if available. Chiller allowed to run if Pump 1 successfully starts.	Manual	Wiring error, faulty contacts on pump contactor
T196	Alert	Flow Lost While Pump 1 Running	Cooler flow switch contacts open for 3 seconds after initially made	All compressors shut down. Pump 1 turned off. Pump 2 will be started if available. Chiller allowed to run if Pump 2 successfully starts and flow switch is closed.	Manual	Wiring error, pump circuit breaker tripped, contactor failure
T197	Alert	Flow Lost While Pump 2 Running	Cooler flow switch contacts open for 3 seconds after initially made	All compressors shut down. Pump 2 turned off. Pump 1 will be started if available. Chiller allowed to run if Pump 1 successfully starts and flow switch is closed.	Manual	Wiring error, pump circuit breaker tripped, contactor failure
A198	Alarm	Cooler Pump 1 Aux Contacts Closed While Pump Off	Pump 1 Auxiliary Contacts closed for 2 minutes when pump state is off	Chiller not allowed to start	Manual when aux contacts open	Wiring error, faulty pump contactor (welded contacts), pump in hand position
A199	Alert	Cooler Pump 2 Aux Contacts Closed While Pump Off	Pump 2 Auxiliary Contacts closed for 2 minutes when pump state is off	Chiller not allowed to start	Manual when aux contacts open	Wiring error, faulty pump contactor (welded contacts), pump in hand position
P200 /A200	Pre-Alert/ Alarm	Cooler Flow/Interlock Contacts Failed to Close at Start-Up	Cooler flow switch contacts failed to close within 1 minute (if cooler pump control is enabled) or within 5 minutes (if cooler pump control is not enabled) after start-up	Chiller not allowed to start. For models with dual pumps, the second pump will be started if available	Manual	Wiring error, pump circuit breaker tripped, contactor failure, faulty flow switch or interlock
P201 /A201	Pre-Alert/ Alarm	Cooler Flow/Interlock Contacts Opened During Normal Operation	Flow switch opens for at least 3 seconds after being initially closed	All compressors shut down. For models with dual pumps, the second pump will be started if available	Automatic (P201) or Manual (A201)	Cooler pump failure, faulty flow switch or interlock, pump circuit breaker tripped
A202	Alarm	Cooler Pump Interlock Closed When Pump is Off	If configured for cooler pump control and flow switch input is closed for 5 minutes while pump output(s) are off	Chiller not allowed to start	Automatic when aux contacts open	Wiring error, faulty pump contactor (welded contacts)
T203	Alert	Loss of Communication with Slave Chiller	Master chiller MBB loses communication with slave chiller MBB	Dual chiller control disabled. Chiller runs as a stand-alone machine.	Automatic	Wiring error, faulty wiring, failed Slave chiller MBB module, power loss at slave chiller, wrong slave address.
T204	Alert	Loss of Communication with Master Chiller	Slave chiller MBB loses communication with master chiller MBB	Dual chiller control disabled. Chiller runs as a stand-alone machine	Automatic	Wiring error, faulty wiring, failed master chiller MBB module, power loss at Master chiller.
T205	Alert	Master and Slave Chiller with Same Address	Master and slave chiller have the same CCN address (CCN.A)	Dual chiller routine disabled. Master/slave run as stand-alone chillers.	Automatic	CCN Address for both chillers is the same. Must be different. Check CCN.A under the OPT2 sub-mode in Configuration at both chillers.

See Legend on page 82.

Table 44 —Alarm and Alert Codes (cont)

A207	Alarm	Cooler Freeze Protection	Cooler EWT or LWT is less than Brine Freeze (BR.FZ)	Chiller shutdown. Cooler pump continues to run a minimum of 5 minutes (if control enabled).	Both EWT and LWT must be at least 6 F (3.3 C) above Brine Freeze point (BR.FZ). Automatic for first, Manual reset thereafter.	Faulty thermistor, low water flow, faulty cooler water.
T206	Alert	High Leaving Chilled Water Temperature	LWT is greater than control point and LCW Alert Limit, and capacity is at 100% for one minute.	Alert only. No action taken.	Automatic	Building load greater than unit capacity, or compressor fault. Check for other alarms/alerts.
A208	Alarm	EWT or LWT Thermistor failure	Cooler EWT is less than LWT by 3° F (1.7° C) for 1 minute after a circuit is started	Chiller shutdown. Cooler pump shut off (if control enabled).	Manual	Faulty cooler pump, low water flow, plugged fluid strainer, faulty thermistor.
T300	Alert	Cooler Pump 1 Scheduled Maintenance Due	Pump 1 Service Countdown (P.1.DN) expired. Complete pump 1 maintenance and enter 'YES' for Pump 1 Maintenance Done (P.1.MN) item.	None	Automatic	Routine pump maintenance required
T301	Alert	Cooler Pump 2 Scheduled Maintenance Due	Pump 2 Service Countdown (P.2.DN) expired. Complete pump 2 maintenance and enter 'YES' for Pump 1 Maintenance Done (P.2.MN) item.	None	Automatic	Routine pump maintenance required
T302	Alert	Strainer Blowdown Scheduled Maintenance Due	Strainer Service Countdown (S.T.DN) expired. Complete strainer blowdown and enter 'YES' for Strainer Maintenance Done (S.T.MN) item.	None	Automatic	Routine strainer maintenance required
T303	Alert	Condenser Coil Maintenance Due	Coil Service Countdown (C.L.DN) expired. Complete condenser coil cleaning and enter 'YES' for Coil Maintenance Done (C.L.MN) item.	None	Automatic	Routine condenser coil maintenance required
A412	Alarm	Variable Speed Fan Motor/Drive Failure Alarm	See Table 45 and Table 46	Chiller shut down	Automatic	See Table 45 - HEVCF Common Alarms and Table 46 - HEVCF Alarm/Alert Details, Danfoss Drive
T413	Alert	Variable Speed Fan Motor/Drive Failure Alert	See Table 45 and Table 46	None	Automatic	See Table 45 - HEVCF Common Alarms and Table 46 - HEVCF Alarm/Alert Details, Danfoss Drive
T501	Alert	Current Sensor Board A1 Failure	Alert occurs when CSB output is a constant high value	Compressor A1 shut down	Automatic	CSB failure. Wiring error.
T502	Alert	Current Sensor Board A2 Failure	Alert occurs when CSB output is a constant high value	Compressor A2 shut down	Automatic	CSB failure. Wiring error.
T503	Alert	Current Sensor Board A3 Failure	Alert occurs when CSB output is a constant high value	Compressor A3 shut down	Automatic	CSB failure. Wiring error.
T505	Alert	Current Sensor Board B1 Failure	Alert occurs when CSB output is a constant high value	Compressor B1 shut down	Automatic	CSB failure. Wiring error.
T506	Alert	Current Sensor Board B2 Failure	Alert occurs when CSB output is a constant high value	Compressor B2 shut down	Automatic	CSB failure. Wiring error.
T507	Alert	Current Sensor Board B3 Failure	Alert occurs when CSB output is a constant high value	Compressor B3 shut down	Automatic	CSB failure. Wiring error.
T950	Alert	Loss of Communication with Water System Manager	No communications have been received by the MBB within 5 minutes of last transmission	WSM forces removed. Chiller runs under own control	Automatic	Failed module, wiring error, failed transformer, loose connection plug, wrong address
A951	Alert	Loss of Communication with Chillervisor System Manager	No communications have been received by the MBB within 5 minutes of last transmission	CSM forces removed. Chiller runs under own control	Automatic	Failed module, wiring error, failed transformer, loose connection plug, wrong address

LEGEND

CCN — Carrier Comfort Network
CSB — Current Sensor Board
CSM — Chillervisor System Manager
CXB — Current Sensor Board
EEPROM — Electronic Erasable Programmable Read Only Memory
EMM — Energy Management Module
EWT — Entering Fluid Temperature
EXV — Electronic Expansion Valve
HSM — Hydronic System Manager
LCW — Leaving Chilled Water
LWT — Leaving Fluid Temperature
MBB — Main Base Board
OAT — Outdoor-Air Temperature
SCT — Saturated Condensing Temperature
WSM — Water System Manager

Table 45 — HEVCF Common Alarms

ALARM	DESCRIPTION	PROBABLE CAUSE
A179	Loss of communication with the Danfoss VFD module	Wrong VFD address, damaged communication cable, wiring error, no power to VFD, unresponsive VFD.
A412	Mains phase loss(A4)*	Phase is missing or imbalance is too high on supply side. Check incoming wiring, drive fuses, and incoming power to unit. This is also used for a fault in the input rectifier on the frequency converter.
A412	Inverter Overload(A9)*	Frequency converter has cut out due to excessive current and temperature over a certain time period. Check motors for locked rotor or shorts.
A412	Torque Limit(A12)*	Motor torque limit has been exceeded. Check motor for locked rotor or fan restrictions.
A412	Over Current(A13)*	Inverter peak current limit is exceeded. Check motor for locked rotor or fan restrictions.
A412	Earth (ground) Fault(A14)*	Current exists between output phases and ground. Check motors for short to ground. Check wiring connections at fan motor terminal block at drive.
A412	Short Circuit(A16)*	There is a short circuit in the motor wiring. Find the short circuit and repair.
A412	Control Word Timeout(A17)*	Drive is not communicating with chiller. Check LEN bus wiring connections. Ensure address is set properly.
A412	Heatsink Temp(A29)*	Heatsink has exceeded max temperature. Check drive fan operation and blockage of air-flow to heatsink fins.
A412	Motor Phase U Missing(A30)*	Check load side wiring to motor for missing phase.
A412	Motor Phase V Missing(A31)*	Check load side wiring to motor for missing phase.
A412	Motor Phase W Missing(A32)*	Check load side wiring to motor for missing phase.
A412	Fieldbus Communication Fault(A34)*	Fieldbus on communication card in drive is not working.

*Danfoss Drive Alarm Code.

Table 46 — HEVCF Alarm/Alert Details, Danfoss Drive

ALARM NO./ WARNING NO.	ALARM	DESCRIPTION	WARNING	ALARM/TRIP	ALARM/ TRIP LOCK	PARAMETER
1	T413	10V Low	X			
2	T413,A412	Live Zero Error	(X)	(X)		6-01
3	T413	No Motor	(X)			1-80
4	T413,A412	Mains phase Loss	(X)	(X)	(X)	14-12
5	T413	DC Voltage High	X			
6	T413	DC Voltage Low	X			
7	T413,A412	DC over Volt	X	X		
8	T413,A412	DC under Volt	X	X		
9	T413,A412	Inverter Overld	X	X		
10	T413,A412	Motor ETR Over	(X)	(X)		1-90
11	T413,A412	Motor Thermistor Over	(X)	(X)		1-90
12	T413,A412	Torque Limit	X	X		
13	T413,A412	Over Current	X	X	X	
14	T413,A412	Earth Fault	X	X	X	
16	A412	Short Circuit		X	X	
17	T413,A412	Ctrl Word TO	(X)	(X)		8-04
23	T413,A412	Fans Warn	X	X		
25	T413,A412	Brake Resistor	X	X		
26	T413,A412	Brake Overload	(X)	(X)		2-13
28	T413,A412	Brake Check	(X)	(X)		2-15
29	A412	Pwr Card Temp		X	X	
30	A412	U phase Loss		(X)	(X)	4-58
31	A412	V phase Loss		(X)	(X)	4-58
32	A412	W phase Loss		(X)	(X)	4-58
33	A412	Inrush Fault		X	X	
34	T413,A412	Fieldbus Fault	X	X		
36	T413,A412	Mains Failure	X	X		
38	A412	Internal Fault		X	X	
47	T413,A412	24V Supply Low	X	X	X	
48	A412	1.8V Supply Low		X	X	
49	T413	Speed Limit	(X)			1-86
57	A412	AMA Not OK		X		
59	T413	Current Limit	X			
61	T413	Encoder Loss	X			
62	T413	Output freq limit	X			
64	T413	Voltage Limit	X			
65	T413,A412	Ctrl Card Temp	X	X	X	
66	T413	Low Temp	X			
67	A412	Option Change		X		
68	A412	Safe Stop		X		
71	T413,A412	PTC1 Safe Stop	X	X		
72	T413,A412	Dangerous Failure	X	X	X	
80	A412	Drive Initialized		X		
94	T413,A412	End of curve	(X)	(X)		22-50
95	T413,A412	Broken Belt	(X)	(X)		22-60
96	T413	Start delayed	(X)			22-76
97	T413	Stop delayed	(X)			22-76
98	T413	Clock Failure	(X)			0-70
203	T413	Missing Motor	X			
204	T413	Locked Rotor	X			
243	T413,A412	Brake IGBT	X	X		
247	T413	Pwr Card Temp	X			
251	A412	Service Trip		X		

NOTE: (X) = Dependent on parameter.

LOW SATURATED SUCTION — Several conditions can lead to low saturated suction alarms and the chiller controls have several override modes built in which will attempt to keep the chiller from shutting down. Low fluid flow, low refrigerant charge and plugged filter driers are the main causes for this condition. To avoid permanent damage and potential freezing of the system, do NOT repeatedly reset these alert and/or alarm conditions without identifying and correcting the cause(s).

COMPRESSOR SAFETIES — The 30RAP units with *Comfort*Link controls include a compressor protection board that protects the operation of each of the compressors. Each board senses the presence or absence of current to each compressor.

If there is a command for a compressor to run and there is no current, then one of the following safeties or conditions have turned the compressor off:

Compressor Overcurrent — All compressors have internal line breaks or a motor protection device located in the compressor electrical box.

Compressor Short Circuit — There will not be current if the circuit breaker that provides short circuit protection has tripped.

Compressor Motor Over Temperature — The internal line-break or over temperature switch has opened.

High-Pressure Switch Trip — The high-pressure switch has opened. Below are the factory settings for the fixed high-pressure switch.

30RAP UNIT SIZE	CUTOUT		CUT-IN	
	PSIG	KPA	PSIG	KPA
010-150	650	4482	500	3447

ASTP Protection Trip — All non-digital Copeland compressors are equipped with an advanced scroll temperature protection (ASTP). A label located above the terminal box identifies models that contain this technology. See Fig. 60.

Fig. 60 — Advanced Scroll Temperature Protection Label (010-090)

Advanced scroll temperature protection is a form of internal discharge temperature protection that unloads the scroll compressor when the internal temperature reaches approximately 300 F. At this temperature, an internal bi-metal disk valve opens and causes the scroll elements to separate, which stops compression. Suction and discharge pressures balance while the motor continues to run. The longer the compressor runs unloaded, the longer it must cool before the bi-metal disk resets. See Fig. 61 for approximate reset times.

To manually reset ASTP, the compressor should be stopped and allowed to cool. If the compressor is not stopped, the motor will run until the motor protector trips, which occurs up to 90 minutes later. Advanced scroll temperature protection will reset automatically before the motor protector resets, which may take up to 2 hours.

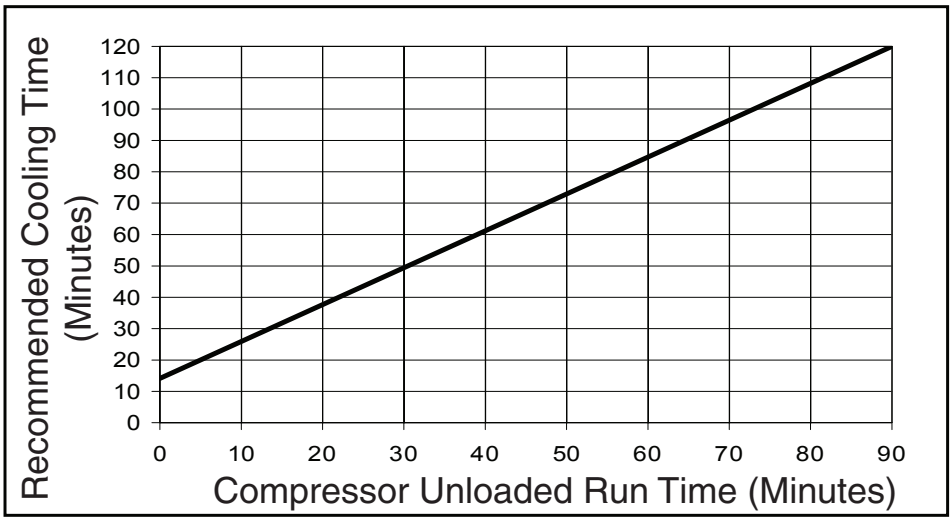

*Times are approximate.
NOTE: Various factors, including high humidity, high ambient temperature, and the presence of a sound blanket will increase cool-down times.

Fig. 61 — Recommended Minimum Cool Down Time After Compressor Is Stopped*

Motor Overload Protection

COPELAND COMPRESSORS MODELS WITH ELECTRICAL CODE TF (010-090) — Models with a "TF" in the electrical code (i.e., ZP120KCE-**TF**D) have an internal line break motor overload located in the center of the Y of the motor windings. This overload disconnects all three legs of the motor from power in case of an over-current or over-temperature condition. The overload reacts to a combination of motor current and motor winding temperature. The internal overload protects against single phasing. Time must be allowed for the motor to cool down before the overload will reset. If current monitoring to the compressor is available, the system controller can take advantage of the compressor internal overload operation. The controller can lock out the compressor if current draw is not coincident with contactor energizing, implying that the compressor has shut off on its internal overload. This will prevent unnecessary compressor cycling on a fault condition until corrective action can be taken.

COPELAND COMPRESSORS MODELS WITH ELECTRICAL CODE "TW" OR "TE" (010-090) OR DANFOSS COMPRESSOR (100-150)

⚠ CAUTION

The electronic motor protection module is a safety device that must not be bypassed or compressor damage may result.

Copeland models with "**TW**" or "**TE**" in the electrical code (i.e.,ZP182KCE-**TW**D or ZP182KCE-**TE**D) or Danfoss compressor have a motor overload system that consists of an external electronic control module connected to a chain of four thermistors embedded in the motor windings. The module will trip and remain off for a minimum of 30 minutes if the motor temperature exceeds a preset point to allow the scrolls to cool down after the motor temperature limit has been reached. It may take as long as two hours for the motor to cool down before the overload will reset.

NOTE: Turning off power to the module resets it immediately.

⚠ CAUTION

Restarting the compressor sooner may cause a destructive temperature buildup in the scrolls.

For this reason, module power must never be switched with the control circuit voltage.

Current sensing boards monitor to the compressor current. The *Comfort*Link control system takes advantage of the compressor overload operation by locking out the compressor if current draw is not detected. This will prevent unnecessary compressor cycling on a fault condition until corrective action can be taken.

Kriwan Motor Protection Module Troubleshooting — Copeland models with a "TW" in the electrical code (i.e., ZP182KCE-**TW**D), have a motor overload system that consists of an external Kriwan electronic control module. These have been replaced by the CoreSense* communication module for motor protection. This section is included for reference, and contains instructions for replacing the Kriwan module with the CoreSense module in the field.

Follow the steps listed below to troubleshoot the Kriwan module in the field. See wiring diagram on terminal box cover, or Fig. 62.

*Trademark of Emerson Climate Technologies.

⚠ WARNING

Do not supply power to unit with compressor cover removed. Failure to follow this warning can cause a fire, resulting in personal injury or death.

⚠ WARNING

Exercise extreme caution when reading compressor currents when high-voltage power is on. Correct any of the problems described below before installing and running a replacement compressor. Wear safety glasses and gloves when handling refrigerants. Failure to follow this warning can cause fire, resulting in personal injury or death.

⚠ CAUTION

Do not manually operate contactors. Serious damage to the machine may result.

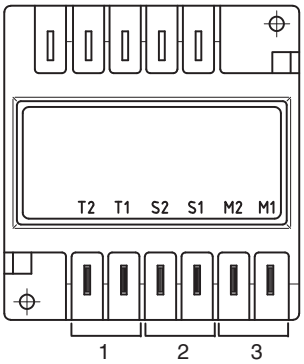

LEGEND

1 — Kriwan Motor Protection Module Power
2 — Kriwan Control Circuit Connections
3 — Motor Thermal Sensor

Fig. 62 — Kriwan Motor Protection Module

1. De-energize control circuit and module power. Remove the control circuit wires from the module (terminals M1 and M2). Connect a jumper across these control circuit wires. This will bypass the control contact of the module.

⚠ CAUTION

The motor protection system within the compressor is now bypassed. Use this configuration to temporarily test module only.

2. Re-energize the control circuit and module power. If the compressor will not operate with the jumper installed, then the problem is external to the solid-state protection system. If the compressor operates with the module bypassed but will not operate when the module is reconnected, then the control circuit relay in the module is open. Remove the temporary jumper installed in Step 1.
3. The thermistor protection chain now needs to be tested to determine if the module's control circuit relay is open due to excessive internal temperatures or a faulty component. Check the thermistor protection chain located in the compressor as follows:
   a. De-energize control circuit and module power.
   b. Remove the sensor leads from the module (S1 and S2).

c. Measure the resistance of the thermistor protection chain through these sensor leads with an ohm meter.

⚠ CAUTION

Use an ohmmeter with a maximum of 9 volts to check the sensor chain. The sensor chain is sensitive and easily damaged; no attempt should be made to check continuity through it with anything other than an ohmmeter. The application of any external voltage to the sensor chain may cause damage requiring the replacement of the compressor.

d. The diagnosis of this resistance reading is as follows:
- 200 to 2250 ohms: Normal operating range
- 2750 ohms or greater: Compressor overheated. Allow time to cool.
- Zero resistance: Shorted sensor circuit. Replace the compressor.
- Infinite resistance: Open sensor circuit. Replace the compressor.

4. If the resistance reading is abnormal, remove the sensor connector plug from the compressor and measure the resistance at the sensor fusite pins. This will determine if the abnormal reading was due to a faulty connector.
5. On initial start-up, and after any module trip, the resistance of the sensor chain must be below the module reset point before the module circuit will close. Reset values are 2250 to 3000 ohms.
6. If the sensor chain has a resistance that is below 2250 ohms, and the compressor will run with the control circuit bypassed, but will not run when connected properly, the solid-state module is defective and should be replaced. The replacement module must have the same supply voltage rating as the original module.

CoreSense Replacement of Kriwan Motor Protection Module — The Kriwan module has been replaced by the CoreSense communication module for motor protection. Minor wiring changes are required as described below.

⚠ WARNING

Electrical shock can cause personal injury and death. Shut off all power to this equipment during installation and service. There may be more than one disconnect switch. Tag all disconnect locations to alert others not to restore power until work is completed.

⚠ WARNING

Do not supply power to unit with compressor cover removed. Failure to follow this warning can cause a fire, resulting in personal injury or death.

Removing the Kriwan motor protection module:

1. Disconnect and lock out the high voltage and control voltage supply to the unit.
2. Using a straight blade screwdriver, carefully depress the tabs holding the terminal cover to the terminal box to remove the terminal cover. Before proceeding, use a volt meter to verify that the power has been disconnected from the unit.
3. Using wire markers, label the M1, M2, T1, and T2 wires that are connected to the Kriwan module. Using needle nose pliers, remove the M1, M2, T1, T2, S1 and S2 wires from the Kriwan motor protector module.
4. Gently bend the holding tabs holding the Kriwan module in the terminal box and remove the Kriwan module from the terminal box. See Fig. 63.
5. Take note of the S1-S2 plug orientation on the compressor thermistor fusite. Remove the S1-S2 wire harness and plug from the compressor.

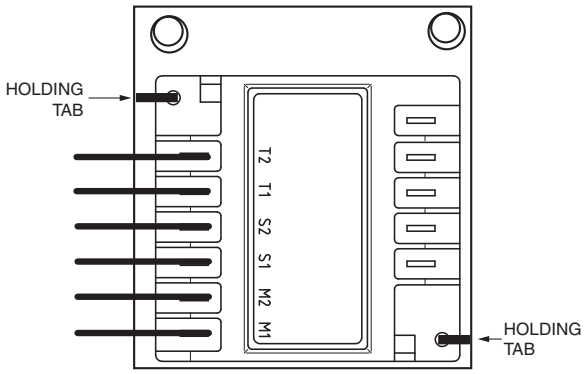

Fig. 63 — Kriwan Motor Protection Module Removal

Installing the CoreSense communications module:

1. A new S1-S2 thermistor wiring harness is shipped with the CoreSense kit and must be used. The wiring harness connector block should be fully inserted on the three pins in the orientation shown in Fig. 64 for proper operation.

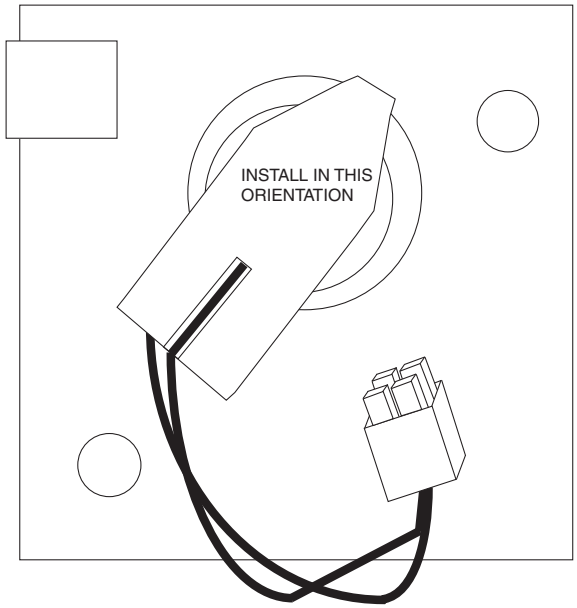

Fig. 64 — Compressor Motor Sensor Harness Installation

2. Review the DIP switch settings on the CoreSense module. DIP switch no. 1 should be ON (up position) and all other DIP switches should be OFF (down position). See Fig. 65.

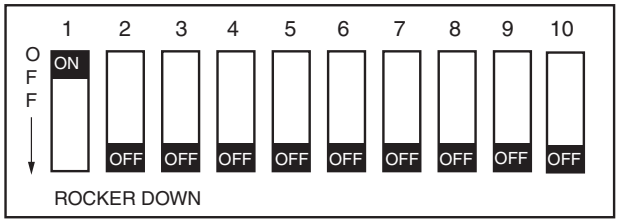

Fig. 65 — CoreSense Communication DIP Switch Settings for Kriwan Retrofit

3. Install the CoreSense module in the compressor terminal box as shown in Fig. 66, with the tabs holding the module in place. Route the thermistor wire harness as shown and plug the harness into the 2x2 socket on the CoreSense module.
4. Connect the previously labeled M1, M2, T1, and T2 wires to the appropriate terminals on the CoreSense module.
5. Connect the L1, L2, and L3 phase sensing wires to the L1, L2, and L3 compressor terminal block connections. See the compressor terminal cover diagram for identification of the L1, L2, and L3 terminal block connections.
6. Double-check the installation and make sure all connections are secure. Install the compressor terminal cover.

   The CoreSense retrofit is complete and the system can be put back into service.

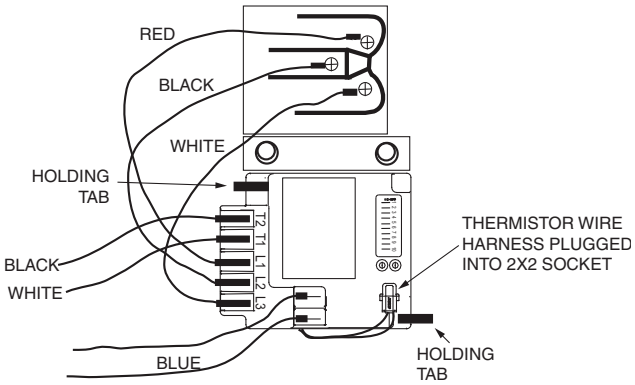

Fig. 66 — CoreSense Communication Module Mounting

CoreSense Communications Module Troubleshooting — Copeland models with a "TE" in the electrical code (i.e., ZP182KCE**TE**D) have a motor overload system that consists of an external CoreSense communication electronic control module.

Motor thermistors are connected to the CoreSense communication module via a 2x2 plug (Fig. 67).

The CoreSense communications module has field configurable DIP switches for addressing and configuring the module. The DIP switches should be addressed as shown in Table 47.

The CoreSense communication module has a green and a red light-emitting diode (LED). A solid green LED indicates the module is powered and operation is normal. A solid red LED indicates an internal problem with the module. If a solid red LED is encountered, power down the module (interrupt the T1-T2 power) for 30 seconds to reboot the module. If a solid red LED is persistent, change the CoreSense module.

The CoreSense module communicates warning codes via a green flashing LED. Warning codes do not result in a trip or lockout condition. Alert codes are communicated via a red flashing LED. Alert codes will result in a trip condition and possibly a lockout condition. See wiring diagram on terminal box cover, or Fig. 68. The flash code corresponds to the number of LED flashes, followed by a pause; then the flash code is repeated. A lockout condition produces a red flash, followed by a pause, a solid red, a second pause, and then repeated. Table 48 lists the flash code information for Warning and Alert codes along with code reset and troubleshooting information.

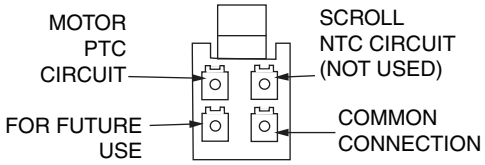

Fig. 67 — CoreSense Communication Motor Thermistor Plug

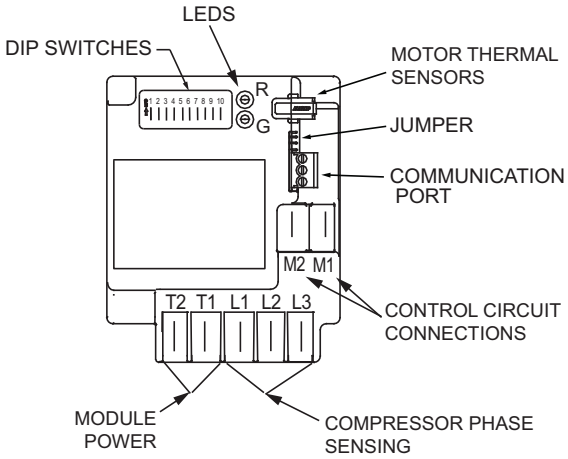

Fig. 68 — CoreSense Communication Motor Protection Wiring

Table 47 — CoreSense Communication Module DIP Switch Settings

COPELAND ELECTRICAL CODE	DIP SWITCH									
	1	2	3	4	5	6	7	8	9	10
"TE"	ON	OFF	OFF	OFF	OFF	OFF	OFF	OFF	ON	OFF
"TW"*	ON	OFF	OFF	OFF	OFF	OFF	OFF	OFF	OFF	OFF

*Settings for Kriwan retrofit. See "CoreSense Replacement of Kriwan Motor Protection Module" on page 87.

Table 48 — CoreSense Communication Module LED Flash Codes

LED STATUS	FAULT CONDITION	FAULT CODE DESCRIPTION	FAULT CODE RESET	TROUBLESHOOTING INFORMATION
SOLID GREEN	None, normal operation	Module is powered and under normal operation	Not applicable	None
SOLID RED	Module malfunction	Module has an internal fault	Not applicable	1. Reset module by removing power from T1-T2. 2. Replace module.
WARNING LED FLASH				
GREEN FLASH CODE 1	Loss of communication	Module and Master Controller have lost communications with each other for more than 5 minutes	Automatic when communications are re-established	Not Supported. Check DIP Switch settings.
GREEN FLASH CODE 2	Not used	Not applicable	Not applicable	Not applicable
GREEN FLASH CODE 3	Short cycling	Run time of less than 1 minute. Number of short cycles exceeds 48 in a 24-hour period.	Fewer than 48 short cycles in 24 hours	30RAP controls do not allow this operation normally. Confirm proper wiring and DIP switch settings.
GREEN FLASH CODE 4	Open/Shorted Scroll Thermistor	Not applicable	Not applicable	Not applicable
GREEN FLASH CODE 5	Not used	Not applicable	Not applicable	Not applicable
ALERT/LOCKOUT LED FLASH				
RED FLASH CODE 1	High motor temperature	Thermistor resistance greater than 4500 Ω. Lockout occurs after 5 alerts.	Thermistor resistance less than 2750 Ω and 30 minutes have elapsed	1. Check power supply. 2. Check system charge and superheat. 3. Check compressor contactor.
RED FLASH CODE 2	Open/shorted motor thermistor	Thermistor resistance greater than 4500 Ω, or less than 100 Ω. Lockout occurs after 6 hours.	Thermistor resistance is between 100 and 2750 Ω and 30 minutes have elapsed	1. Check for poor connections at module and thermistor fusite. 2. Check continuity of thermistor wiring harness. 3. Check for an open thermistor circuit.
RED FLASH CODE 3	Short cycling	Run time of less than 1 minute. Lockout if the number of alerts exceeds the number configured by the user in 24 hours.	Interrupt power to T2-T1	30RAP controls do not allow this operation normally. Confirm proper wiring.
RED FLASH CODE 4	Scroll high temperature	Not applicable	Not applicable	Not applicable
RED FLASH CODE 5	Not used	Not applicable	Not applicable	Not applicable
RED FLASH CODE 6	Missing phase	Missing phase detected. Lockout after 10 consecutive alerts.	After 5 minutes and missing phase condition is not present	1. Check incoming power. 2. Check fuses or circuit breakers. 3. Check compressor contactor.
RED FLASH CODE 7	Reverse phase	Reverse phase detected. Lockout after 1 alert.	Interrupt power to T2-T1	1. Check incoming power phase sequence 2. Check compressor contactor 3. Check module phase wiring A-B-C.
RED FLASH CODE 8	Not used	Not applicable	Not applicable	Not applicable
RED FLASH CODE 9	Module low voltage	Less than 18 vac supplied to module	After 5 minutes and voltage is between 18 and 30 vac	This alert does not result in a lockout fault. 1. Verify correct 24 vac module is installed. 2. Check for a wiring error.

Warning Codes (Green LED Flash Code):

- Code 1 – Loss of Communication: The module will flash the green Warning LED one time indicating the module has not communicated with the master controller for longer than 5 minutes. Once communication is reinitiated, the Warning will be cleared. The 30RAP units do not support the communication capability of this module.
- Code 2 – Reserved For Future Use
- Code 3 – Short Cycling: The module will flash the green Warning LED three times indicating the compressor has short cycled more than 48 times in 24 hours. A short cycle is defined as compressor runtime of less than 1 minute. The Warning will be activated when the "Short Cycling" DIP Switch (no. 10) is OFF (in the down position). When fewer than 48 short cycles are accumulated in 24 hours the Warning code will be cleared.
- Code 4 – Open/Shorted Scroll Thermistor: The module will flash the green Warning LED four times, indicating that the scroll NTC thermistor has a resistance value that indicates an open/shorted thermistor. The Warning will be cleared when the resistance value is in the normal range. The 30RAP units do not utilize a scroll thermistor.
- Code 5 – Not used.

Alert/Lockout Codes (Red LED Flash Code):

- Code 1 – Motor High Temperature: The module will flash the red Alert LED one time indicating the motor PTC circuit has exceeded 4500 Ω. A Code 1 Alert will open the M2-M1 contacts. The Alert will reset after 30 minutes and the M2-M1 contacts will close if the resistance of the motor PTC circuit is below 2750 Ω. Five consecutive Code 1 Alerts will lock out the compressor. Once the module has locked out the compressor, a power cycle will be required for the lockout to be cleared.
- Code 2 – Open/Shorted Motor Thermistor: The module will flash the red Alert LED 2 times indicating the motor PTC thermistor circuit has a resistance value greater than 2200 Ω or less than 100 Ω. that indicates an open/shorted thermistor chain. A Code 2 Alert will open the M2-M1 contacts. The

Alert will reset after 30 minutes and the M2-M1 contacts will close if the resistance of the motor PTC circuit is back in the normal range. The module will lock out the compressor if the trip condition exists for longer than 6 hours. Once the module has locked out the compressor, a power cycle will be required to clear the lockout.

- Code 3 – Short Cycling: The module will flash the red Alert LED 3 times indicating the compressor is locked out due to short cycling. A Code 3 Alert will open the M2-M1 contacts. Code 3 will be enabled when the Short Cycling DIP switch (no. 10) is ON (in the up position) and the compressor has exceeded the number of short cycles configured by the user in a 24-hour period. Once the module has locked out the compressor, a power cycle will be required to clear the lockout.
- Code 4 – Scroll High Temperature: The module will flash the red Alert LED 4 times indicating the scroll NTC circuit is less than 2400 Ω. A Code 4 Alert will open the M2-M1 contacts. The Alert will reset after 30 minutes and the M2-M1 contacts will close if the resistance of the scroll NTC circuit is higher than 5100 Ω. The module will lock out the compressor if the number of Code 4 Alerts exceeds the user configurable number of Code 4 events within a 24-hour period. Once the module has locked out the compressor, a power cycle will be required to clear the lockout.
- Code 5 – Not used.
- Code 6 – Missing Phase: The module will flash the red Alert LED 6 times indicating a missing phase in one of the three leads to the compressor. A Code 6 Alert will open the M2-M1 contacts. The Alert will reset after 5 minutes and the M2-M1 contacts will close if the missing phase condition is not present. The module will lock out the compressor after 10 consecutive Code 6 Alerts. Once the module has locked out the compressor, a power cycle will be required to clear the lockout.
- Code 7 – Reverse Phase: The module will flash the red Alert LED 7 times indicating a reverse phase in two of the three leads to the compressor. A Code 7 Alert will open the M2-M1 contacts. The module will lock out the compressor after one Code 7 Alert. A power cycle will be required to clear the lockout.
- Code 8 – Not used.
- Code 9 – Module Low Voltage: The module will flash the red Alert LED 9 times indicating low module voltage, less than 18 vac on the T2-T1 terminals for more than 5 seconds. A Code 9 Alert will open the M2-M1 contacts. The Alert will reset after 5 minutes and the M2-M1 contacts will close if the T2-T1 voltage is above the reset value in 18 to 30 vac.

Resetting Alert codes can be accomplished manually by cycling power to the module (disconnect T2 or T1 for 5 seconds). If the fault that initiated the Alert code is absent after the reset is performed, the Alert code will be cleared and CoreSense module will allow normal operation. If the fault is still present after the reset is performed, the fault code will continue to be displayed via the green or red flashing LED.

Troubleshooting procedures described for the Kriwan module section (page 86) are applicable to the CoreSense communication module.

Copeland replacement compressors are shipped with two solid-stage motor protection modules. A 120/240-volt module is installed and a 24-volt module is shipped with the compressor. The 30RAP units require the 24-volt module be field installed. Failure to install the 24-volt module will result in a compressor failure alarm. See Fig. 69.

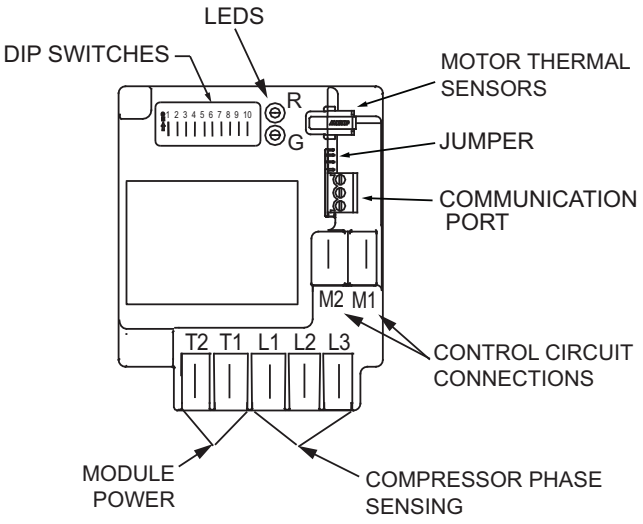

Fig. 69 — Solid-State Motor Protection Module

Danfoss Electronic Module Replacement of Kriwan Motor Protection Module — The Kriwan module has been replaced by the Danfoss communication module for motor protection on all Danfoss compressors.

Motor Overheating and Overloading — The motor protector comprises a control module and PTC sensors embedded in the motor winding. The close contact between thermistors and windings ensures a very low level of thermal inertia.

The motor temperature is constantly measured by a PTC thermistor loop connected on S1-S2. If the thermistor exceeds its response temperature, its resistance increases above the trip level (4,500 Ω) and the output relay then trips; i.e., contacts M1-M2 are open. After cooling to below the response temperature (resistance < 2,750 Ω), a 5-minute time delay is activated.

After this delay has elapsed, the relay is once again pulled in; i.e., contacts M1-M2 are closed. The time delay may be canceled by means of resetting the mains (L-N-disconnect) for approximately 5 seconds.

A red/green twin LED is visible on the module. A solid green LED denotes a fault-free condition. A blinking red LED indicates an identifiable fault condition. See Fig. 70 and 71.

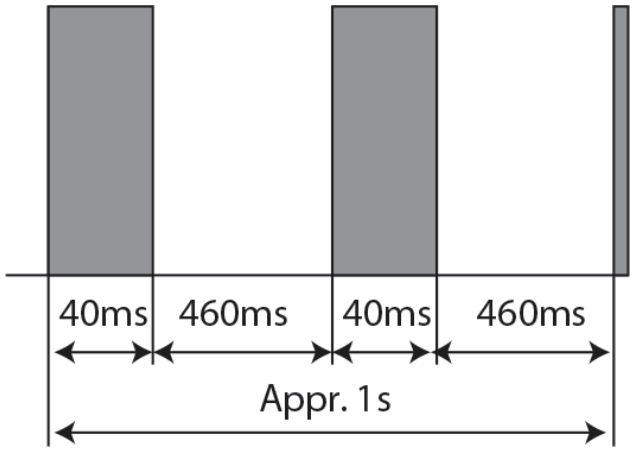

Fig. 70 — PTC Overheat

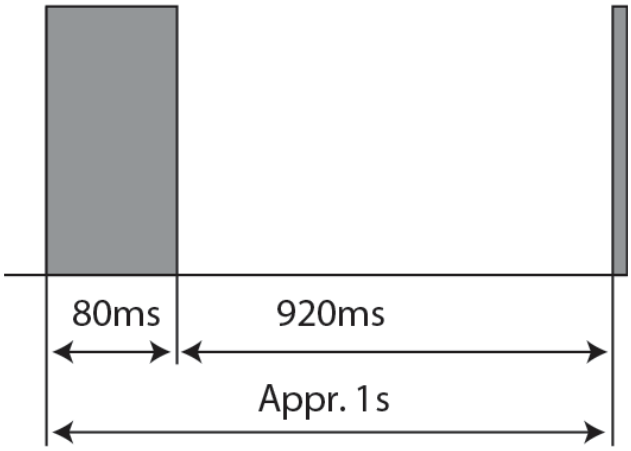

Fig. 71 — PTC Reset Delay Active (after PTC Overheat)

Phase Loss, Phase Sequence — The electronic module provides protection against phase reversal and phase loss at start-up.

The circuit should be thoroughly checked in order to determine the cause of the phase problem before re-energizing the control circuit. The phase sequencing and phase loss monitoring functions are active during a 5-second window 1 second after the compressor start-up (power on L1-L2-L3). See Fig. 72.

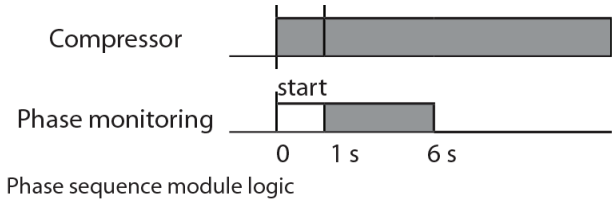

Fig. 72 — Phase Sequence Module Logic

Should one of these parameters be incorrect, the relay would lock out (contact M1-M2 [or 11-14] open). The red LED on the module will show the following blink code (Fig. 73 and 74).

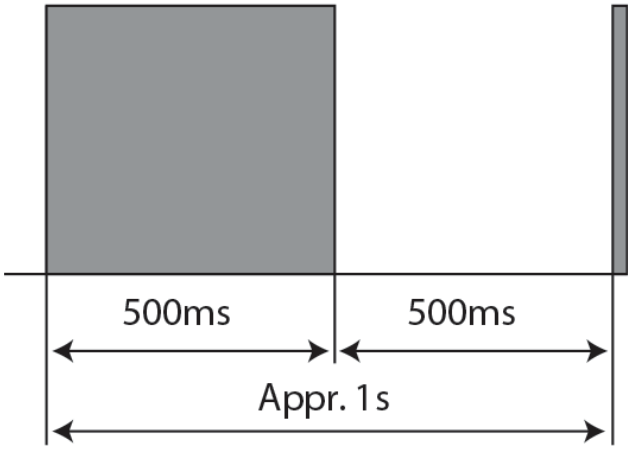

Fig. 73 — In Case of Phase Loss Error

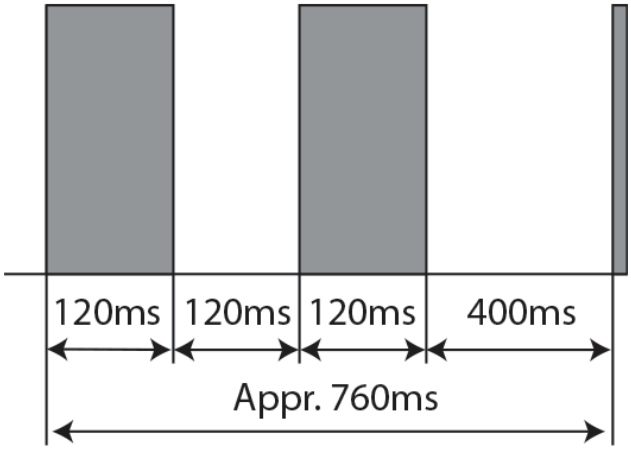

Fig. 74 — In Case of Phase Reverse Error

The lockout may be canceled by resetting the power mains (disconnect L-N) for approximately 5 seconds.

Internal Module Failure Protection — An internal microprocessor fault leads to trip; relay contacts M1-M2 open.

Fault Diagnosis — If the relay contacts M1-M2 are open, carry out the following steps:

1. Check all electrical connections (wiring, drawing conformity, connection tightness…)
2. Try to reset by interrupting mains supply to the module for at least 5 seconds.

   If, after reset, the relay contacts M1-M2 are closed, a fault in motor power supply or high motor temperature caused a trip condition (missing phase, wrong phase sequence, operating outside of the compressor operating envelope...).

   If the relay contacts M1-M2 remain open:

   a. Disconnect the PTC thermistor leads and measure the resistance value at this point (max measurement voltage 3V).
      - R=∞: PTC loop opened; remove compressor.
      - R>2750Ω: wait until compressor motor winding temperature has cooled down, then reconnect PTC and try to reset; check root causes of motor overheating (operation outside of working envelope...).
      - 150Ω<R<1250Ω: normal resistance value for PTC at ambient temperature; continue with step 2.b.
      - R=0Ω: PTC loop in short circuit; replace the compressor.

   b. Test the module itself within the terminal box:
      - Disconnect L-N.
      - Disconnect S1-S2.
      - Disconnect M1-M2.
      - Reconnect mains supply L-N.
      - Bridge S1-S2.
      - Try to reset by interrupting mains supply to the module for at least 5 seconds.
      - Check relay contacts M1-M2 with ohmmeter.
        - If the relay contacts M1-M2 are closed, module is okay.

- If the relay contacts M1-M2 are still open, replace the module.

High Discharge Gas Temperature Protection — Units equipped with digital compressors have an additional thermistor located on the discharge line. If discharge temperature exceeds 265 F (129.4 C), the digital compressor will be shut off.

Alarms will also occur if the current sensor board malfunctions or is not properly connected to its assigned digital input. If the compressor is commanded OFF and the current sensor reads ON, an alert is generated. This will indicate that a compressor contactor has failed closed. In this case, a special mode, Compressor Stuck on Control, will be enabled and all other compressors will be turned off. An alarm will then be enabled to indicate that service is required. Outdoor fans will continue to operate. The first outdoor fan stage is turned on immediately. The other stages of fan will be turned on as required by SCT.

Alarms and Alerts — These are warnings of abnormal or fault conditions, and may cause either one circuit or the whole unit to shut down. They are assigned code numbers as described in Table 44.

If the unit is in alarm and unable to operate, Control Mode (STAT) = 4 (Off Emrgcy).

Automatic alarms will reset without operator intervention if the condition corrects itself. The following method must be used to reset manual alarms:

Before resetting any alarm, first determine the cause of the alarm and correct it. Enter the Alarms mode indicated by the LED on the side of the scrolling marquee display. Press ENTER and ▼ until the sub-menu item RCRN "RESET ALL CURRENT ALARMS" is displayed. Press ENTER. The control will prompt the user for a password, by displaying PASS and WORD. Press ENTER to display the default password, 1111. Press ENTER for each character. If the password has been changed, use the arrow keys to change each individual character. Toggle the display to "YES" and press ENTER. The alarms will be reset.

COMPRESSOR FAILURE ALERTS

T051, T052, T053 (Circuit A Compressor Failures)

T055, T056, T057 (Circuit B Compressor Failures) — Alert codes T051-T053 are for compressors A1-A3, respectively, and T055-T057 are for compressors B1-B3, respectively. These alerts occur when the current sensor (CS) does not detect compressor current during compressor operation. When this occurs, the control turns off the compressor.

If the current sensor board reads OFF while the compressor relay has been commanded ON, an alert is generated.

POSSIBLE CAUSES

Compressor Overload — Either the compressor internal overload protector is open or the external overload protector (Kriwan module) has activated. The external overload protector modules are mounted in the compressor wiring junction box. Temperature sensors embedded in the compressor motor windings are the inputs to the module. The module is powered with 24 vac from the units main control box. The module output is a normally closed contact that is wired in series with the compressor contactor coil. In a compressor motor overload condition, contact opens, deenergizing the compressor contactor.

Low Refrigerant Charge — If the compressor operates for an extended period of time with low refrigerant charge, the compressor ASTP device will open, which will cause the compressor to trip on its overload protection device.

Circuit Breaker Trip — The compressors are protected from short circuit by a breaker in the control box.

Wiring Error — A wiring error might not allow the compressor to start.

To check out alerts T051-T057:

1. Turn on the compressor in question using Service Test mode. If the compressor does not start, then most likely the problem is one of the following: HPS open, open internal protection, circuit breaker trip, incorrect safety wiring, or incorrect compressor wiring.
2. If the compressor does start, verify it is rotating in the correct direction.

IMPORTANT: Prolonged operation in the wrong direction can damage the compressor. Correct rotation can be verified by a gage set and looking for a differential pressure rise on start-up.

IMPORTANT: If the CS is always detecting current, verify that the compressor is on. If the compressor is on, check the contactor and the relay on the MBB. If the compressor is off and there is no current, verify the CSB wiring and replace if necessary.

IMPORTANT: Return to Normal mode and observe compressor operation to verify that compressor current sensor is working and condenser fans are energized.

COMPRESSOR STUCK ON FAILURE ALARMS

Circuit A A051, A052, A053

Circuit B A055, A056, A057 — Alarm codes A051, A052, A053, A055, A056, and A057 are for compressors A1, A2, A3, B1, B2, and B3. These alarms occur when the CSB detects current when the compressor should be off. When this occurs, the control turns off the compressor.

If the current sensor board reads ON while the compressor relay has been commanded OFF for a period of 4 continuous seconds, an alarm is generated. These alarms are only monitored for a period of 10 seconds after the compressor relay has been commanded OFF. This is done to facilitate a service technician forcing a relay to test a compressor.

In addition, if a compressor stuck failure occurs and the current sensor board reports the compressor and the request off, certain diagnostics will take place as follows:

1. If any of the compressors are diagnosed as stuck on and the current sensor board is on and the request is off, the control will command the condenser fans to maintain normal head pressure.
2. The control will shut off all other compressors.

   The possible causes include welded contactor or frozen compressor relay on the MBB.

To check out alarms A051-A057:

1. Place the unit in Service Test mode. All compressors should be off.
2. Verify that there is not 24 v at the contactor coil. If there is 24 v at the contactor, check relay on MBB and wiring.
3. Check for welded contactor.
4. Verify CSB wiring.
5. Return to Normal mode and observe compressor operation to verify that compressor current sensor is working and condenser fans are energized.

Circuit A A051, A052, A053 (Chattering Failure)

Circuit B A055, A056, A057 (Chattering Failure) — Alarm codes A051, A052, A053 are for compressors A1, A2, and A3: A055, A056, and A057 are for compressors B1, B2, and B3. The compressor is commanded ON. If the compressor feedback indicates a feedback regular expression of 11*00*11*0

during any given 16-sec. time period, the alert is tripped. In regular expression notation X* means any number of occurrences of X (including 0 occurrences). For the expression 11*00*11*0, read as at least 1 ON state, followed by at least 1 OFF state, followed by at least one ON state, followed by one OFF state. (In the given expression, 1 is ON, 0 is OFF.) When this occurs, the control turns off the compressor and a manual reset is required.

POSSIBLE CAUSES

Typically this failure will indicate that the high pressure switch (HPS) is chattering. The HPS is in series with the 24 VAC that is providing power to the on-board relay (which in turn is powering the coil of the compressor contactor). It is possible for the HPS to reset faster than the control can detect it reliably (without experiencing nuisance trips), thus the need for chattering compressor logic. Note that the HPS also has chattering logic applied to it.

A060 (Cooler Leaving Fluid Thermistor Failure) — If the sensor reading is outside the range of –40 to 245 F (–40 to 118 C) then the alarm will occur. The cause of the alarm is usually a faulty thermistor, a shorted or open thermistor caused by a wiring error, or a loose connection. Failure of this thermistor will shut down the entire unit.

A061 (Cooler Entering Thermistor Failure) — If the sensor reading is outside the range of –40 to 240 F (–40 to116 C) then the alarm will occur. The cause of the alarm is usually a faulty thermistor, a shorted or open thermistor caused by a wiring error, or a loose connection. Failure of this thermistor will shut down the entire unit.

T068, T069 (Circuit A,B Compressor Return Gas Temperature Thermistor Failure) — This alert occurs when the compressor return gas temperature sensor is outside the range of –40 to 240 F (–40 to 116 C). Failure of this thermistor will shut down the appropriate circuit.

T073 (Outside Air Temperature Thermistor Failure) — This alert occurs when the outside air temperature sensor is outside the range of –40 to 240 F (–40 to 116 C). Failure of this thermistor will disable any elements of the control which require its use.

T074 (Space Temperature Thermistor Failure) — This alert occurs when the space temperature sensor is outside the range of –40 to 245 F (–40 to 118 C). Failure of this thermistor will disable any elements of the control which requires its use. The cause of the alert is usually a faulty thermistor in the T55 or T58 device, a shorted or open thermistor caused by a wiring error, or a loose connection.

T077 (Circuit A Saturated Suction Temperature exceeds Cooler Leaving Fluid Temperature)

T078 (Circuit B Saturated Suction Temperature exceeds Cooler Leaving Fluid Temperature) — Alert codes T077 and T078 occur when a compressor in a circuit has been running and the saturated suction temperature is greater than the cooler leaving water temperature for 5 minutes. The alert is generated and the circuit is shut down. The alert automatically resets when the saturated suction temperature is less than the leaving water temperature minus 1° F (0.5° C).

T090 (Circuit A Discharge Pressure Transducer Failure)

T091 (Circuit B Discharge Pressure Transducer Failure) — Alert codes T090 and T091 are for circuits A and B, respectively. These alerts occur when the pressure is outside the range of 0.0 to 667.0 psig. A circuit cannot run when this alert is active. Use the scrolling marquee to reset the alert. The cause of the alert is usually a faulty transducer, faulty 5-v power supply, or a loose connection.

T092 (Circuit A Suction Pressure Transducer Failure)

T093 (Circuit B Suction Pressure Transducer Failure) — Alert codes T092 and T093 are for circuits A and B, respectively. These alerts occur when the pressure is outside the range of 0.0 to 420.0 psig. A circuit cannot run when this alert is active. Use the scrolling marquee to reset the alert. The cause of the alert is usually a faulty transducer, faulty 5-v power supply, or a loose connection.

T094 (Discharge Gas Thermistor Failure) — This alert occurs for units which have the digital compressor installed on circuit A. If discharge gas temperature is open or shorted, the circuit will be shut off. The alert will reset itself when discharge temperature is less than 250 F (121.1 C). The cause of the alert is usually low refrigerant charge or a faulty thermistor.

T110 (Circuit A Loss of Charge)

T111 (Circuit B Loss of Charge) — Alert codes T110 and T111 are for circuits A and B, respectively. These alerts occur when the compressor is OFF and the discharge pressure is less than 26 psig.

T112 (Circuit A High Saturated Suction Temperature)

T113 (Circuit B High Saturated Suction Temperature) — Alert codes T112 and T113 occur when compressors in a circuit have been running for at least 5 minutes and the circuit saturated suction temperature is greater than 70 F (21.1 C). The high saturated suction alert is generated and the circuit is shut down.

T114 (Circuit A Low Suction Superheat)
T115 (Circuit B Low Suction Superheat) — Alert codes T114 and T115 occur when the superheat of a circuit is less than 5 F (2.8 C) for 5 continuous minutes. The low superheat alert is generated and the circuit is shut down.

T116 (Circuit A Low Cooler Suction Temperature)

T117 (Circuit B Low Cooler Suction Temperature) — Alert codes T116 and T117 are for circuits A and B, respectively. These alerts are generated if the capacity stages are reduced three times without a 30 minute interval between capacity reductions due to operating mode 7 or mode 8.

T118 (High Discharge Gas Temperature Alert)

A118 (High Discharge Gas Temperature Alarm) — This alert or alarm occurs for units which have the digital compressor installed on circuit A. If discharge gas temperature is greater than 268 F (131.1 C), the circuit will be shut off. The alert will reset itself when discharge temperature is less than 250 F (121.1 C). If this alert occurs 3 times within a day, the A118 alarm will be generated and the alarm must be reset manually. The cause of the alert is usually low refrigerant charge or a faulty thermistor.

T126 (Circuit A High Head Pressure)

T127 (Circuit B High Head Pressure) — Alert codes T126 and T127 are for circuits A and B, respectively. These alerts occur when the appropriate saturated condensing temperature is greater than the operating envelope shown in Fig. 28 or 29. Prior to the alert, the control will shut down one compressor on a circuit if that circuit's saturated condensing temperature is greater than the maximum SCT minus 5° F (2.7° C). If SCT continues to rise to greater than the maximum SCT, the alert will occur and the circuit's remaining compressor will shut down. The cause of the alarm is usually an overcharged system, high outdoor ambient temperature coupled with dirty outdoor coil, non-condensables, faulty condenser fan motor, plugged filter drier, or a faulty high-pressure switch.

T133 (Circuit A Low Suction Pressure)

T134 (Circuit B Low Suction Pressure) — Alert codes T133 and T134 are for circuits A and B, respectively. These alerts are generated if one of the two following conditions is satisfied: the circuit suction pressure is below 34 psig (234.4 kPa) for 8 seconds, or the suction pressure is below 23 psig (158.6 kPa). The cause of this alert may be low refrigerant charge, plugged liquid line filter drier, or sticking EXV. Check head pressure operation. If not equipped, consider adding low ambient temperature head pressure control.

Add wind baffles if required.

A140 (Reverse Rotation Detected) — A test is made once, when compressor is energized, for suction pressure change on the first activated circuit. The unit control determines failure as follows:

1. The suction pressure of both circuits is sampled 5 seconds before the compressor is brought on, right when the compressor is brought on, and 5 seconds afterwards.
2. The rate of suction pressure change from 5 seconds before the compressor is brought on to when the compressor is brought on is calculated.
3. The rate of suction pressure change from when the compressor is brought on to 5 seconds afterwards is calculated.
4. With the above information, the test for reverse rotation is made. If the suction pressure change 5 seconds after compression is greater than the suction pressure change 5 seconds before compression – 1.25, then there is a reverse rotation error.

This alarm will disable mechanical cooling and will require manual reset.

A150 (Unit is in Emergency Stop) — If the CCN emergency stop command is received, the alarm is generated and the unit will be immediately stopped.

If the CCN point name "EMSTOP" in the system table is set to emergency stop, the unit will shut down immediately and broadcast an alarm back to the CCN, indicating that the unit is down. This alarm will clear when the variable is set back to "enable."

A151 (Illegal Configuration) — An A151 alarm indicates an invalid configuration has been entered. The following are illegal configurations.

- Invalid unit size has been entered.
- Fluid is water with ICE making configured.
- Incorrect AUX board installed with Motormaster configured (AUX 1 must be used).
- Incorrect AUX software version (must be 3.0 or higher).

A152 (Unit Down Due to Failure) — Both circuits are off due to alerts and/or alarms. Reset is automatic when all alarms are cleared. This alarm indicates the unit is at 0% capacity.

T153 (Real Time Clock Hardware Failure) — A problem has been detected with MBB real time clock hardware. Try resetting the power and check the indicator lights. If the alarm continues, the board should be replaced.

A154 (Serial EEPROM Hardware Failure) — A problem has been detected with the EEPROM on the MBB. Try resetting the power and check the indicator lights. If the alarm continues, the board should be replaced.

T155 (Serial EEPROM Storage Failure Error) — A problem has been detected with the EEPROM storage on the MBB. Try resetting the power and check the indicator lights. If the alert continues, the board should be replaced.

A156 (Critical Serial EEPROM Storage Failure Error) — A problem has been detected with the EEPROM storage on the MBB. Try resetting the power and check the indicator lights. If the alarm continues, the board should be replaced.

A157 (A/D Hardware Failure) — A problem has been detected with A/D conversion on the boards. Try resetting the power and check the indicator lights. If the alarm continues, the board should be replaced.

T170 (Loss of Communication with the Compressor Expansion Module) —This alert indicates that there are communications problems with the compressor expansion module. All functions performed by the CXB will stop. The alarm will automatically reset.

A172 (Loss of Communication with the EXV Board) — This alarm indicates that there are communications problems with the EXV board. The alarm will automatically reset.

T173 (Energy Management Module Communication Failure) — This alert indicates that there are communications problems with the energy management. All functions performed by the EMM will stop, which can include demand limit, reset and capacity input. The alarm will automatically reset.

T174 (4 to 20 mA Cooling Set Point Input Failure) — This alert indicates a problem has been detected with cooling set point 4 to 20 mA input. The input value is either less than 2 mA or greater than 22 mA.

T175 (Loss of Communication with the AUX Board) — This alarm indicates that there are communications problems with the AUX board. All functions performed by the AUX board will stop, which can include digital scroll unloader operation and low ambient head pressure control. The alarm will automatically reset.

T176 (4 to 20 mA Reset Input Failure) — This alert indicates a problem has been detected with reset 4 to 20 mA input. The input value is either less than 2 mA or greater than 22 mA. The reset function will be disabled when this occurs.

T177 (4 to 20 mA Demand Limit Input Failure) — This alert indicates a problem has been detected with demand limit 4 to 20 mA input. The input value is either less than 2 mA or greater than 22 mA. The reset function will be disabled when this occurs.

A179 (Fan VFD Communication Failure) — This alarm indicates that there are communications problems between MBB and fan VFD. When this alarm occurs, the chiller will shut down. Reset is automatic when all alarms are cleared.

A189 (Cooler Pump Auxiliary Contacts Inputs Miswired) — This alarm indicates that Pump 1 auxiliary contacts are closed when Pump 2 output is energized or Pump 2 auxiliary contacts are closed when Pump 1 output is energized. When this alarm occurs, both pump outputs are turned off. Reset is automatic when all alarms are cleared.

T190 (Cooler Pump 1 Aux Contacts Failed to Close at Start-Up) — This alert indicates that Pump 1 auxiliary contacts did not close within 26 seconds after Pump 1 was started. When this alert occurs, Pump 1 will be turned off. Pump 2 will be started if available. Manual reset is required for this alert.

T191 (Cooler Pump 2 Aux Contacts Failed to Close at Start-Up) — This alert indicates that Pump 2 auxiliary contacts did not close within 26 seconds after Pump 2 was started. When this alert occurs, Pump 2 will be turned off. Pump 1 will be started if available. Manual reset is required for this alert.

T192 (Cooler Pump 1 Failed to Provide Flow at Start-Up) — This alert indicates that Pump 1 did not provide flow to close flow switch within 60 seconds after Pump 1 was started. When this alert occurs, Pump 1 will be turned off. Pump 2 will be started if available. Manual reset is required for this alert.

T193 (Cooler Pump 2 Failed to Provide Flow at Start-Up) — This alert indicates that Pump 2 did not provide flow to close flow switch within 60 seconds after Pump 2 was started. When this alert occurs, Pump 2 will be turned off. Pump 1 will be started if available. Manual reset is required for this alert.

T194 (Cooler Pump 1 Aux Contacts Opened During Normal Operation) — This alert indicates that Pump 1 auxiliary contacts open for 26 seconds after initially made. When this alert occurs, all compressors shut down and Pump 1 will be turned off. Pump 2 will be started if available. Chiller will be allowed to run if Pump 2 starts successfully. Manual reset is required for this alert.

T195 (Cooler Pump 2 Aux Contacts Opened During Normal Operation) — This alert indicates that Pump 2 auxiliary contacts open for 26 seconds after initially made. When this alert occurs, all compressors shut down and Pump 2 will be

turned off. Pump 1 will be started if available. Chiller will be allowed to run if Pump 1 starts successfully. Manual reset is required for this alert.

T196 (Flow Lost While Pump 1 Running) — This alert indicates that cooler flow switch contacts open for 3 seconds after initially made, when Pump 1 is running. When this alert occurs, all compressors shut down and Pump 1 will be turned off. Pump 2 will be started if available. Chiller will be allowed to run if Pump 2 starts successfully. Manual reset is required for this alert.

T197 (Flow Lost While Pump 2 Running) — This alert indicates that cooler flow switch contacts open for 3 seconds after initially made, when Pump 2 is running. When this alert occurs, all compressors shut down and Pump 2 will be turned off. Pump 1 will be started if available. Chiller will be allowed to run if Pump 1 starts successfully. Manual reset is required for this alert.

A198 (Cooler Pump 1 Aux Contacts Closed While Pump Off) — This alert indicates that Pump 1 auxiliary contacts closed for 2 minutes when pump state is off. When this alarm occurs, chiller is not allowed to start. Manual reset is required for this alarm, when aux contact becomes open.

A199 (Cooler Pump 2 Aux Contacts Closed While Pump Off) — This alert indicates that Pump 2 auxiliary contacts closed for 2 minutes when pump state is off. When this alarm occurs, Chiller is not allowed to start. Manual reset is required for this alarm, when aux contact becomes open.

P200 — Cooler Flow/Interlock Contacts Failed to Close at Start-Up Pre-Alert

A200 — Cooler Flow/Interlock Contacts Failed to Close at Start-Up Alarm — These alarms will occur if the cooler flow switch/cooler pump interlock contacts failed to close within 1 minute after start-up, if cooler pump control is enabled; or within 5 minutes after start-up, if cooler pump control is not enabled. If the unit is equipped with dual pumps, the second pump will be started and time allowed to prove flow before the unit is alarmed. When this alarm occurs, the chiller is not allowed to start. The alarm will require manual reset.

If this condition is encountered, check the following items:

- chilled water flow switch, for proper operation
- flow switch cable, for power and control
- chilled water loop to be sure that it is completely filled with water, and all air has been purged
- chilled water pump interlock circuit, for proper operation
- pump electrical circuit for power
- pump circuit breaker
- pump contactor, for proper operation
- chilled water pump, for proper operation; look for overload trips
- chilled water strainer for a restriction
- all isolation valves are open completely

P201 — Cooler Flow/Interlock Contacts Opened During Normal Operation Pre-Alert

A201 — Cooler Flow/Interlock Contacts Opened During Normal Operation Alarm — If the chilled water flow switch opens for at least three (3) seconds after initially being closed, a P201 — Cooler Flow/Interlock Contacts Opened During Normal Operation Pre-Alert will be generated for the appropriate pump and the machine will stop. If available, the other pump will be started. If flow is proven, the machine will be allowed to restart. If after 5 minutes, the cooler flow switch/interlock contacts do not close, the alarm will change to an A201 — Cooler Flow/Interlock Contacts Opened During Normal Operation Alarm.

When this alarm occurs, the chiller will be shut down. The pre-alert (P201) will be reset automatically; the alarm (A201) will require manual reset.

Possible Causes:

If this condition is encountered, check the following items:

- chilled water flow switch, for proper operation.
- flow switch cable, for power and control.
- chilled water loop to be sure that it is completely filled with water, and all air has been purged.
- chilled water pump interlock circuit for proper operation.

In units that do not control the chilled water pump, check the Cooler Pump Shutdown Delay (***Configuration→OPT1→PM.DY***). The factory default is set to one minute. If the unit is signaled to stop and the pumps are shutdown shortly after the command, this alarm may trigger. Try setting the delay to 0. Look at the system operation sequence to be sure that the unit has enough time to shut down, before the chilled water flow stops. Check the following items:

- pump electrical circuit for power.
- pump circuit breaker.
- pump contactor, for proper operation.
- chilled water pump for proper operation; look for overload trips.
- chilled water strainer for a restriction.
- all isolation valves are open completely.

A202 (Cooler Pump Interlock Closed When Pump is Off) — This alarm indicates that if the chiller is configured for cooler pump control, the flow switch input is closed for 5 minutes while the pump outputs are off. When this alarm occurs, the chiller will shut down. Reset is automatic when auxiliary contact becomes open.

T203 (Loss of Communication with Slave Chiller) — This alert indicates that the master chiller MBB loses communication with the slave chiller MBB. When this alert occurs, dual chiller routine will be disabled; Master/Slave will run as stand-alone chillers. Reset is automatic when all alerts are cleared.

T204 (Loss of Communication with Master Chiller) — This alert indicates that the slave chiller MBB loses communication with the master chiller MBB. When this alert occurs, dual chiller routine will be disabled; Master/Slave will run as stand-alone chillers. Reset is automatic when all alerts are cleared.

T205 (Master and Slave Chiller with Same Address) — This alert indicates that the master and slave chiller have the same CCN address (***CCN.A***). When this alert occurs, dual chiller routine will be disabled; Master/Slave will run as stand-alone chillers. Reset is automatic when all alerts are cleared.

T206 — High Leaving Chilled Water Temperature Alert — This alert will be generated if the unit is at 100% capacity for at least 60 seconds and the Leaving Water Temperature, **LWT** (***Run Status→VIEW***) is greater than the Control Point, **CTPT** (***Run Status→VIEW***) plus the High Leaving Chilled Water Alert Limit, **LCWT** (***Configuration→OPT2***).

LWT > CTPT + LCWT

LCWT is field selectable from 2 to 60 ΔF (1.1 to 33.3 ΔC) and is defaulted at 60 ΔF (33.3 ΔC).

The unit will not generate this alert if Capacity, **CAP** (***Run Status→VIEW***) is less than 100%. If the unit's available capacity is less than 100%, this alert will not be generated.

No action will be taken; this is an alert only.

This alert will reset automatically if one of two conditions is met:

1. If the Leaving Water Temperature, **LWT** (***Run Status→VIEW***) is less than the Control Point, **CTPT** (***Run Status→VIEW***) plus the High Leaving Chilled Water Alert Limit, **LCWT** (***Configuration→OPT2***) minus 5° F (2.8° C).

   LWT < CTPT + LCWT – 5° F (2.8° C)

2. If the Leaving Water Temperature, **LWT** (***Run Status→VIEW***) is less than the Control Point, **CTPT** (***Run Status→VIEW***).

   LWT < CTPT

If this condition is encountered, check to be sure building load does not exceed unit capacity.

A207 (Cooler Freeze Protection) — This alarm indicates that cooler EWT or LWT is less than Brine Freeze (***BR.FZ***). When this alarm occurs, chiller will shut down; the cooler pump will continue to run a minimum of 5 minutes if control enabled. Both EWT and LWT must be at least 6 F (3.3 C) above the brine freeze point (***BR.FZ***) to clear the alarm. The alarm will be cleared automatically for the first time, then manual reset will be required thereafter.

A208 (EWT or LWT Thermistor Failure) — This alarm indicates that cooler EWT is less than LWT by 3 F for one minute after a circuit is started. When this alarm occurs, chiller will shut down; the cooler pump will shut off if control enabled. Manual reset will be required for this alarm.

T300 (Cooler Pump 1 Scheduled Maintenance Due) — This alert indicates that Pump 1 Service Countdown (***P.1.DN***) expired. Complete Pump 1 maintenance and enter "YES" for Pump 1 Maintenance Done (***P.1.MN***) item to clear the alert. Reset is automatic when all alerts are cleared.

T301 (Cooler Pump 2 Scheduled Maintenance Due) — This alert indicates that Pump 2 Service Countdown (***P.2.DN***) expired. Complete Pump 2 maintenance and enter "YES" for Pump 2 Maintenance Done (***P.2.MN***) item to clear the alert. Reset is automatic when all alerts are cleared.

T302 (Strainer Blowdown Scheduled Maintenance Due) — This alert indicates that Strainer Service Countdown (***S.T.DN***) expired. Complete the strainer blowdown maintenance and enter "YES" for Strainer Maintenance Done (***S.T.MN***) item to clear the alert. Reset is automatic when all alerts are cleared.

T303 (Condenser Coil Maintenance Due) — This alert indicates that Coil Service Countdown (***C.L.DN***) expired. Complete the condenser coil cleaning and enter "YES" for Coil Maintenance Done (***C.L.MN***) item to clear the alert. Reset is automatic when all alerts are cleared.

A412 (Variable Speed Fan Motor/Drive Failure) — This alarm indicates that there is a variable speed fan motor/VFD related alarm. See Tables 44 and 45 for details. When this alarm occurs, chiller will shut down, or is not allowed to start. Reset is automatic when all alarms are cleared.

T413 (Variable Speed Fan Motor/Drive Failure) — This alert indicates that there is a variable speed fan motor/VFD related alert See Tables 44 and 45 for details. When this alert occurs, there is no impact to normal chiller operation. Reset is automatic when all alerts are cleared.

T501, T502, T503 (Current Sensor Board Failure — A xx Circuit A)

T505, T506, T507 (Current Sensor Board Failure — B xx Circuit B) — Alert codes T501-T503 are for compressors A1-A3, respectively, and T505-T507 are for compressors B1-B3, respectively. These alerts occur when the output of the CSB is a constant high value. These alerts reset automatically. If the problem cannot be resolved, the CSB must be replaced.

T950 (Loss of Communication with Water System Manager) — This alert indicates that no communications have been received by the MBB within 5 minutes of last transmission. When this alert occurs, WSM forces will be removed and chiller will run under its own control. Reset is automatic when all alerts are cleared.

A951 (Loss of Communication with Chillervisor System Manager) — This alarm indicates that no communications have been received by the MBB within 5 minutes of last transmission. When this alarm occurs, CSM forces will be removed and chiller will run under its own control. Reset is automatic when all alarms are cleared.

APPENDIX A — DISPLAY TABLES

Run Status Mode and Sub-Mode Directory

SUB-MODE	ITEM	DISPLAY	ITEM DESCRIPTION	COMMENT
VIEW	AUTO VIEW OF RUN STATUS			
	EWT	XXX.X° F	Entering Fluid Temp	
	LWT	XXX.X° F	Leaving Fluid Temp	
	SETP	XXX.X° F	Internal Active Setpoint	
	CTPT	XXX.X° F	Control Point	
	LOD.F	XXX	Load/Unload Factor	
	STAT		Control Mode	0=Service Test 1=Off Local 2=Off CCN 3=Off Time 4=Off Emrgcy 5=On Local 6=On CCN 7=On Time 8=Ht Enabled 9=Pump Delay
	LD.PM		Lead Pump	
	OCC	YES/NO	Occupied	
	LS.AC	YES/NO	Low Sound Active	
	MODE	YES/NO	Override Modes in Effect	
	CAP	XXX	Percent Total Capacity	
	STGE	X	Requested Stage	
	ALRM	XXX	Current Alarms & Alerts	
	TIME	XX.XX	Time of Day	00:00-23:59
	MNTH	XX	Month of Year	1 - 12 (1 = January, 2 = February, etc.)
	DATE	XX	Day of Month	01-31
	YEAR	XX	Year of Century	
	C. TON	XXX.X TONS	Total Available Capacity	
RUN	UNIT RUN HOUR AND START			
	HRS.U	XXXX HRS	Machine Operating Hours	
	STR.U	XXXX	Machine Starts	
	HR.P1	XXXX HRS	Pump 1 Run Hours	
	HR.P2	XXXX HRS	Pump 2 Run Hours	
HOUR	CIRC AND COMP RUN HOURS			
	HRS.A	XXXX HRS	Circuit A Run Hours	
	HRS.B	XXXX HRS	Circuit B Run Hours	See Note
	HR.A1	XXXX HRS	Compressor A1 Run Hours	
	HR.A2	XXXX HRS	Compressor A2 Run Hours	
	HR.A3	XXXX HRS	Compressor A3 Run Hours	
	HR.B1	XXXX HRS	Compressor B1 Run Hours	See Note
	HR.B2	XXXX HRS	Compressor B2 Run Hours	See Note
	HR.B3	XXXX HRS	Compressor B3 Run Hours	See Note
STRT	COMPRESSOR STARTS			
	ST.A1	XXXX	Compressor A1 Starts	
	ST.A2	XXXX	Compressor A2 Starts	
	ST.A3	XXXX	Compressor A3 Starts	
	ST.B1	XXXX	Compressor B1 Starts	See Note
	ST.B2	XXXX	Compressor B2 Starts	See Note
	ST.B3	XXXX	Compressor B3 Starts	See Note

NOTE: If the unit has a single circuit, the Circuit B items will not appear in the display.

APPENDIX A — DISPLAY TABLES (cont)

Run Status Mode and Sub-Mode Directory (cont)

SUB-MODE	ITEM	DISPLAY	ITEM DESCRIPTION	COMMENT
PM	PREVENTIVE MAINTENANCE			
	PUMP	PUMP MAINTENANCE		
	SI.PM	XXXX HRS	Pump Service Interval	Default: 8760
	P.1.DN	XXXX HRS	Pump 1 Service Countdown	
	P.2.DN	XXXX HRS	Pump 2 Service Countdown	
	P.1.MN	YES/NO	Pump 1 Maintenance Done	User Entry
	P.2.MN	YES/NO	Pump 2 Maintenance Done	User Entry
	PMDT	PUMP MAINTENANCE DATES		
	P.1.M0		MM/DD/YY HH:MM	
	P.1.M1		MM/DD/YY HH:MM	
	P.1.M2		MM/DD/YY HH:MM	
	P.1.M3		MM/DD/YY HH:MM	
	P.1.M4		MM/DD/YY HH:MM	
	P.2.M0		MM/DD/YY HH:MM	
	P.2.M1		MM/DD/YY HH:MM	
	P.2.M2		MM/DD/YY HH:MM	
	P.2.M3		MM/DD/YY HH:MM	
	P.2.M4		MM/DD/YY HH:MM	
	STRN	STRAINER MAINTENANCE		
	SI.ST	XXXX HRS	Strainer Srvc Interval	Default: 8760
	S.T.DN	XXXX HRS	Strainer Srvc Countdown	
	S.T.MN	YES/NO	Strainer Maint. Done	User Entry
	ST.DT	STRAINER MAINTENANCE DATES		
	S.T.M0		MM/DD/YY HH:MM	
	S.T.M1		MM/DD/YY HH:MM	
	S.T.M2		MM/DD/YY HH:MM	
	S.T.M3		MM/DD/YY HH:MM	
	S.T.M4		MM/DD/YY HH:MM	
	COIL	COIL MAINTENANCE		
	SI.CL	XXXX HRS	Coil Cleaning Srvc Int	Default: 8760
	C.L.DN	XXXX HRS	Coil Service Countdown	
	C.L.MN	YES/NO	Coil Cleaning Maint.Done	User Entry
	CL.DT	COIL MAINTENANCE DATES		
	C.L.M0		MM/DD/YY HH:MM	
	C.L.M1		MM/DD/YY HH:MM	
	C.L.M2		MM/DD/YY HH:MM	
	C.L.M3		MM/DD/YY HH:MM	
	C.L.M4		MM/DD/YY HH:MM	
VERS	SOFTWARE VERSION NUMBERS			
	MBB		CESR131460-XX-XX	XX-XX is version number
	EXV		CESR131172-XX-XX	XX-XX is version number
	AUX1		CESR131333-XX-XX	XX-XX is version number
	EMM		CESR131174-XX-XX	XX-XX is version number
	MARQ		CESR131171-XX-XX	XX-XX is version number
	NAVI		CESR130227-XX-XX	XX-XX is version number
	CXB		CESR131173-XX-XX	XX-XX is version number

APPENDIX A — DISPLAY TABLES (cont)

Service Test Mode and Sub-Mode Directory

SUB-MODE	ITEM	DISPLAY	ITEM DESCRIPTION	COMMENT*
TEST			Service Test Mode	To enable Service Test mode, move Enable/Off/Remote Control switch to OFF. Change TEST to ON. Move switch to ENABLE
OUTS	OUTPUTS			
	EXV.A	XXX%	EXV% Open	
	EXV.B	XXX%	EXV% Open	
	FAN1	ON/OFF	Fan 1 Relay	Size 010-030: Fan 1 Size 035-060: Fan 3 Size 070-090: Fan 5 Size 100-115: Fan 7 Size 130-150: Fan 9
	FAN2	ON/OFF	Fan 2 Relay	Size 018-030: Fan 2 Size 035-060: Fans 1, 2 Size 070-150: Fan 1
	FAN3	ON/OFF	Fan 3 Relay	Size 055, 060: Fan 4 Size 070-090: Fan 6 Size 100-150: Fans 2, 4
	FAN4	ON/OFF	Fan 4 Relay	Size 070-150: Fan 3
	FAN5	ON/OFF	Fan 5 Relay	Size 070-090: Fan 2 Size 100-115: Fan 5 Size 130-150: Fan 7
	FAN6	ON/OFF	Fan 6 Relay	Size 080-090: Fan 4 Size 100: Fan 8 Size 115: Fans 6,8 Size 130-150: Fans 8, 10
	FAN7	ON/OFF	Fan 7 Relay	Size130-150: Fan 5
	FAN8	ON/OFF	Fan 8 Relay	Size 150: Fan 6
	V.HPA	XXX%	Var Head Press% Circuit A	
	V.HPB	XXX%	Var Head Press% Circuit B	
	CLP.1	ON/OFF	Cooler Pump Relay 1	
	CLP.2	ON/OFF	Cooler Pump Relay 2	
	DIG.P	XXX%	Compressor A1 Load Percent	Digital Scroll option only
	CL.HT	ON/OFF	Cooler/Pump Heater	
	CCH.A	ON/OFF	Crankcase Heater Circuit A	
	CCH.B	ON/OFF	Crankcase Heater Circuit B	
	RMT.A	ON/OFF	Remote Alarm Relay	
CMPA	CIRCUIT A COMPRESSOR TEST			
	CC.A1	ON/OFF	Compressor A1 Relay	
	DIG.P	XXX%	Compressor A1 Load Percent	Digital Scroll option only
	CC.A2	ON/OFF	Compressor A2 Relay	
	CC.A3	ON/OFF	Compressor A3 Relay	
	MLV	ON/OFF	Minimum Load Valve Relay	
CMPB	CIRCUIT B COMPRESSOR TEST			
	CC.B1	ON/OFF	Compressor B1 Relay	See Note
	CC.B2	ON/OFF	Compressor B2 Relay	See Note
	CC.B3	ON/OFF	Compressor B3 Relay	See Note

NOTE: If the unit has a single circuit, the Circuit B items will not appear in the display.

*Refer to Fig. 30 on page 35 for condenser fan layout.

APPENDIX A — DISPLAY TABLES (cont)

Temperature Mode and Sub-Mode Directory

SUB-MODE	ITEM	DISPLAY	ITEM DESCRIPTION	COMMENT
UNIT	ENTERING AND LEAVING UNIT TEMPERATURES			
	CEWT	XXX.X° F	Cooler Entering Fluid	
	CLWT	XXX.X° F	Cooler Leaving Fluid	
	OAT	XXX.X° F	Outside Air Temperature	
	SPT	XXX.X° F	Space Temperature	
	DLWT	XXX.X° F	Lead/Lag Leaving Fluid	
CIR.A	TEMPERATURES CIRCUIT A			
	SCT.A	XXX.X° F	Saturated Condensing Tmp	
	SST.A	XXX.X° F	Saturated Suction Temp	
	RGT.A	XXX.X° F	Compr Return Gas Temp	
	D.GAS	XXX.X° F	Discharge Gas Temp	Digital Scroll option only
	SH.A	XXX.X ΔF	Suction Superheat Temp	
CIR.B	TEMPERATURES CIRCUIT B			
	SCT.B	XXX.X° F	Saturated Condensing Tmp	See Note
	SST.B	XXX.X° F	Saturated Suction Temp	See Note
	RGT.B	XXX.X° F	Compr Return Gas Temp	See Note
	SH.B	XXX.X ΔF	Suction Superheat Temp	See Note

NOTE: If the unit has a single circuit, the Circuit B items will not appear in the display.

Pressures Mode and Sub-Mode Directory

SUB-MODE	ITEM	DISPLAY	ITEM DESCRIPTION	COMMENT
PRC.A	PRESSURES CIRCUIT A			
	DP.A	XXX.X PSIG	Discharge Pressure	
	SP.A	XXX.X PSIG	Suction Pressure	
PRC.B	PRESSURES CIRCUIT B			
	DP.B	XXX.X PSIG	Discharge Pressure	See Note
	SP.B	XXX.X PSIG	Suction Pressure	See Note

NOTE: If the unit has a single circuit, the Circuit B items will not appear in the display.

Set Points Mode and Sub-Mode Directory

SUB-MODE	ITEM	DISPLAY	ITEM DESCRIPTION	RANGE	COMMENT
COOL	COOLING SET POINTS				
	CSP.1	XXX.X° F	Cooling Set Point 1	–20 to 70	Default: 44 F
	CSP.2	XXX.X° F	Cooling Set Point 2	–20 to 70	Default: 44 F
	CSP.3	XXX.X° F	ICE Set Point	–20 to 32	Default: 32 F
	OAT.L	XXX.X° F	OAT Lockout Temp	–20 to 120	Default: –20 F
HEAD	HEAD PRESSURE SET POINTS				
	H.DP	XXX.X° F	Head Set Point	85 to 120	Default: 95 F
	F.ON	XXX.X° F	Fan On Set Point	Read Only	Default: 95 F
	F.OFF	XXX.X° F	Fan Off Set Point	Read Only	Default: 72 F
	B.OFF	XX.X° F	Base Fan Off Delta Temp	10 to 50	Default: 23 F
	F.DLT	XX.X ΔF	Fan Stage Delta	0 to 50	Default: 15 F
FRZ	BRINE FREEZE SET POINT				
	BR.FZ	XX.X° F	Brine Freeze Point	–20 to 34	Default: 34 F

APPENDIX A — DISPLAY TABLES (cont)

Inputs Mode and Sub-Mode Directory

SUB-MODE	ITEM	DISPLAY	ITEM DESCRIPTION	COMMENT
GEN.I	GENERAL INPUTS			
	STST	STRT/STOP	Start/Stop Switch	
	FLOW	ON/OFF	Cooler Flow Switch	
	PM.F.1	ON/OFF	Cooler Pump 1 Interlock	
	PM.F.2	ON/OFF	Cooler Pump 2 Interlock	
	HT.RQ	ON/OFF	Heat Request	
	DLS1	ON/OFF	Demand Limit Switch 1	
	DLS2	ON/OFF	Demand Limit Switch 2	
	ICED	ON/OFF	Ice Done	
	DUAL	ON/OFF	Dual Set Point Switch	
CRCT	CIRCUIT INPUTS			
	FKA1	ON/OFF	Compressor A1 Feedback	
	FKA2	ON/OFF	Compressor A2 Feedback	
	FKA3	ON/OFF	Compressor A3 Feedback	
	FKB1	ON/OFF	Compressor B1 Feedback	See Note
	FKB2	ON/OFF	Compressor B2 Feedback	See Note
	FKB3	ON/OFF	Compressor B3 Feedback	See Note
4-20	4-20 MA INPUTS			
	DMND	XX.X mA	4-20 mA Demand Signal	
	RSET	XX.X mA	4-20 mA Reset Signal	
	CSP	XX.X mA	4-20 mA Cooling Set Point	

NOTE: If the unit has a single circuit, the Circuit B items will not appear in the display.

APPENDIX A — DISPLAY TABLES (cont)

Outputs Mode and Sub-Mode Directory

SUB-MODE	ITEM	DISPLAY	ITEM DESCRIPTION	COMMENT
GEN.O	GENERAL OUTPUTS			
	FAN1	ON/OFF	Fan 1 Relay	
	FAN2	ON/OFF	Fan 2 Relay	
	FAN3	ON/OFF	Fan 3 Relay	
	FAN4	ON/OFF	Fan 4 Relay	
	FAN5	ON/OFF	Fan 5 Relay	
	FAN6	ON/OFF	Fan 6 Relay	
	FAN7	ON/OFF	Fan 7 Relay	
	FAN8	ON/OFF	Fan 8 Relay	
	V.HPA	XXX.X%	Fan Speed Circuit A	
	V.HPB	XXX.X%	Fan Speed Circuit B	See Note
	C.WP1	ON/OFF	Cooler Pump Relay 1	
	C.WP2	ON/OFF	Cooler Pump Relay 2	
	CLHT	ON/OFF	Cooler/Pump Heater	
	MLV.R	ON/OFF	Minimum Load Valve Relay	
A.EXV	OUTPUTS CIRCUIT A EXV			
	EXV.A	XXX.X%	EXV% Open	
	APPR	XX.X ΔF	Circuit A Approach	
	AP.SP	XX.X ΔF	Approach Setpoint	
	X.SH.R	XX.X ΔF	SH Reset at Max Unl-Dig	
	S.SH.R	XXX.X%	Digload to Start SH RST	
	SH_R	XX.X ΔF	Amount of SH Reset	
	OVR.A	XX	EXVA Override	
	SPH.A	XX.X ΔF	Suction Superheat Temp	
	ASH.S	XX.X ΔF	Active Superheat Setpt	
	AMP.S	XX.X ΔF	Active Mop Setpt	
	PLM.A	XXX.X%	Cir A EXV Position Limit	
	SPR.1	XXX.X° F	Spare 1 Temperature	
B.EXV	OUTPUTS CIRCUIT A EXV			
	EXV.B	XXX.X%	EXV% Open	
	APPR	XX.X ΔF	Circuit B Approach	
	AP.SP	XX.X ΔF	Approach Setpoint	
	OVR.B	XX	EXVB Override	
	SPH.B	XX.X ΔF	Suction Superheat Temp	
	ASH.S	XX.X ΔF	Active Superheat Setpt	
	AMP.S	XX.X ΔF	Active Mop Setpt	
	PLM.B	XXX.X%	Cir B EXV Position Limit	
	SPR.2	XXX.X° F	Spare 2 Temperature	
CIR.A	OUTPUTS CIRCUIT A			
	CC.A1	ON/OFF	Compressor A1 Relay	
	DPE.R	XXX.X%	Comp A1 Load Percent	
	CC.A2	ON/OFF	Compressor A2 Relay	
	CC.A3	ON/OFF	Compressor A3 Relay	
	CCH.A	ON/OFF	Crankcase Heater Circ A	
CIR.B	OUTPUTS CIRCUIT B			
	CC.B1	ON/OFF	Compressor B1 Relay	See Note
	CC.B2	ON/OFF	Compressor B2 Relay	See Note
	CC.B3	ON/OFF	Compressor B3 Relay	See Note
	CCH.B	ON/OFF	Crankcase Heater Circ B	See Note

NOTE: If the unit has a single circuit, the Circuit B items will not appear in the display.

APPENDIX A — DISPLAY TABLES (cont)

Configuration Mode and Sub-Mode Directory

SUB-MODE	ITEM	DISPLAY	ITEM DESCRIPTION	COMMENT
DISP	DISPLAY CONFIGURATION			
	TEST	ON/OFF	Test Display LEDs	
	METR	ON/OFF	Metric Display	Off = English On = Metric
	LANG	X	Language Selection	Default: 0 0 = English 1 = Espanol 2 = Francais 3 = Portuguese
	PAS.E	ENBL/DSBL	Password Enable	Default: Enable
	PASS	XXXX	Service Password	Default: 1111
UNIT	UNIT CONFIGURATION			
	SIZE		Unit Size	
	SZA.1	XX TONS	Compressor A1 Size	Automatically configured dependent on unit size.
	SZA.2	XX TONS	Compressor A2 Size	
	SZA.3	XX TONS	Compressor A3 Size	
	SZB.1	XX TONS	Compressor B1 Size	
	SZB.2	XX TONS	Compressor B2 Size	
	SZB.3	XX TONS	Compressor B3 Size	
	SH.SP	XX.X ΔF	Suction Superheat Setpt	Default: 9 F
	FAN.S	XX	Number of Fans	Dependent on Unit Size
	EXV	YES/NO	EXV Module Installed	Default: Yes
	A1.TY	YES/NO	Compressor A1 Digital	Default: No
	MAX.T	XX SEC	Maximum A1 Unload Time	Default: 7 Max = 12 (010,015) Max = 10 (011,016-150)
	FN.SQ	YES/NO	CONDFAN SEQ for SSN 2214	YES, if unit produced on or after 2214 (WWYY) NO, if unit produced before 2214 (WWYY)
	VLTS	XXX	Unit Voltage	Unit Nameplate Voltage 60 Hz - 208, 230, 380, 460, 575 50 Hz - 400
	F.POL	X	Num Poles in Fan	Low Sound Fan = 8 Metal Fan = 6
OPT1	UNIT OPTIONS 1 HARDWARE			
	FLUD	X	Cooler Fluid	Default: Water 1 = Water 2 = Medium Temperature Brine
	MLV.S	YES/NO	Minimum Load Valve Select	Default: No
	CSB.E	ENBL/DSBL	CSB Boards Enable	Default: Enable
	CPC	ON/OFF	Cooler Pump Control	Default: Off
	PM1E	YES/NO	Cooler Pump 1 Enable	
	PM2E	YES/NO	Cooler Pump 2 Enable	
	PM.P.S	YES/NO	Cooler Pmp Periodic Strt	Default: No
	PM.SL	X	Cooler Pump Select	Default: Automatic 0 = Automatic 1 = Pump 1 Starts first 2 = Pump 2 Starts first
	PM.DY	XX MIN	Cooler Pump Shutdown Dly	0 to 10 minutes, Default: 1 min.
	PM.DT	XXXX HRS	Pump Changeover Hours	Default: 500 hours
	ROT.P	YES/NO	Rotate Cooler Pumps Now	User Entry
	PMP.O	X	Cooler Pump Operation	Default: 0 0 = Auto 1 = Continuous
	PM.HT	XX.X° F	Pump High Temp Cut Off	Default: 95 F Range: 95 - 125 F
	EMM	YES/NO	EMM Module Installed	EMM is automatically configured to Yes when an option requiring the EMM is configured.
	CND.T	X	Cnd HX Typ:0=RTPF 1=MCHX	
	MOPS	XX.X° F	EXV MOP Set Point	Default: 50 F Range: 40 - 80 F
	APPR	XX.X° F	Config Approach Set Point	Default: 9.0 F Range: 5 - 40 F

Configuration Mode and Sub-Mode Directory (cont)

SUB-MODE	ITEM	DISPLAY	ITEM DESCRIPTION	COMMENT
OPT2	UNIT OPTIONS 2 CONTROLS			
	CTRL	X	Control Method	Default: 0 0 = Enable/Off/Remote Switch 2 = Occupancy 3 = CCN Control
	LOAD	X	Loading Sequence Select	Default: 1 1 = Equal 2 = Staged
	LLCS	X	Lead/Lag Circuit Select	Default: 1 1 = Automatic 2 = Circuit A Leads 3 = Circuit B Leads
	LCWT	XX.X ΔF	High LCW Alert Limit	Default: 60 F Range: 2 to 60 F
	DELY	XX	Minutes Off Time	Default: 0 Minutes Range: 0 to 15 Minutes
	ICE.M	ENBL/DSBL	Ice Mode Enable	Default: Disable
	LS.MD	X	Low Sound Mode Select	Default: 0 0 = Mode Disable 1 = Fan Noise Only 2 = Fan/Compressor Noise
	LS.ST	00:00	Low Sound Start Time	Default: 00:00
	LS.ND	00:00	Low Sound End Time	Default: 00:00
	LS.LT	XXX%	Low Sound Capacity Limit	Default: 100% Range: 0 to 100%
	ALR.C	X	Alarm Relay Usage	0 = ALTS & ALRMS 1 = Alarms Only 2 = OFF
	SER.T	ENBL/DSBL	Service Trio Enable	
CCN	CCN NETWORK CONFIGS			
	CCNA	XXX	CCN Address	Default: 1 Range: 0 to 239
	CCNB	XXX	CCN Bus Number	Default: 0 Range: 0 to 239
	BAUD	X	CCN Baud Rate	Default: 3 1 = 2400 2 = 4800 3 = 9600 4 =19,200 5 =38,400

Configuration Mode and Sub-Mode Directory (cont)

SUB-MODE	ITEM	DISPLAY	ITEM DESCRIPTION	COMMENT
EXV.A	CIR A EXV CONFIGURATION			
	EXV.L	XX%	EXV Opening at Low LWT	Default:25% Range:0 to 50%
	LWT.L	XX° F	LWT for EXV Min Opening	Default:10 F Range:-20 to 40 F
	EXV.H	XX%	EXV Opening at High LWT	Default:50% Range: 0 to 70%
	LWT.H	XX° F	LWT for EXV Max Opening	Default:35 F Range:20 to 70 F
	MIN.A	XXX.X%	EXV CIRC.A Min Position	Default: 2 Range: 0 - 100
	RNG.A	XXXXX STEP	EXVA Steps in Range	Default: * Range: 0 - 65535
	SPD.A	XXXXX	EXVA Steps Per Second	Default: 150 Range: 0 - 65535
	POF.A	X.XX%	EXVA Fail Position In%	Default: 0 Range: 0 - 100
	MIN.A	XXXXX STEP	EXVA Minimum Steps	Default: 0 Range: 0 - 65535
	MAX.A	XXXXX STEP	EXVA Maximum Steps	Default: * Range: 0 - 65535
	OVR.A	XXX.X%	EXVA Overrun Steps	Default: 167 Range: 0 - 65535
	A.ST.P	XXX.X%	EXV CIRC.A Start Position	
	TYP.A	X	EXVA Stepper Type	Default: 1 0 = UNIPOLAR 1 = BIPOLAR
	H.SCT	XXX.X° F	High SCT Threshold	Default: 115 Range: 50 - 140
	X.PCT	XX.X%	Open EXV X% on 2nd COMP	Default: 10 Range: 0 - 30
	X.PER	XX.X%	Move EXV X% on DISCRSOL	Default: 5 Range: 0 - 30
	A.PCT	XXX.X%	Pre-Open EXV - Fan Adding	Default: 10 Range: 0 - 100
	M.PCT	XXX.X%	Pre-Close EXV - Fan Sub	Default: 10 Range: 0 - 100
	S.PCT	XXX SEC	Pre-Close EXV - Lag Shut	Default: 10 Range: 0 - 100
	DELY	XXX SEC	Lag Start Delay	Default: 10 Range: 0 - 100
	L.DL.T	XXX SEC	Low SH Delta T - EXV Move	Default: 6 Range: 0 - 240
	SHR.T	XX.X ΔF	EXV Rate Threshold	Default: 0.2ΔF Range: –1.0 to 1.0 ΔF
	L.EX.M	X.X%	Low SH Override EXV Move	Default: 1.0% Range: 0.4 to 3.0%
EXV.B	CIR B EXV CONFIGURATION			
	MIN.B	XXX.X%	EXV Circ.B Min Position	Default: 2% Range:0 to 100
	RNG.B	XXXXX STEP	EXVB Steps in Range	Default: * Range: 0 to 65535
	SPD.B	XXXXX	EXVB Steps Per Second	Default: 150 Range: 0 to 65535
	POF.B	XXX.X%	EXVB Fail Position in %	Default: 0 Range: 0 to 100
	MIN.B	XXXXX STEP	EXVB Minimum Steps	Default: 0 Range: 0 to 65535
	MAX.B	XXXXX STEP	EXVB Maximum Steps	Default: * Range: 0 to 65535
	OVR.B	XXX STEP	EXVB Overrun Steps	Default: 167 Range: 0 to 65535
	TYP.B	X	EXVB Stepper Type	Default: 1 0 = UNIPOLAR 1 = BIPOLAR

* Sizes 010-020 and 035-045, default is 1596. Sizes 025,030, 050-060, default is 2500, and 070-100 A circuit, default is 2785. 100 B circuit - 150, default is 3690.

Configuration Mode and Sub-Mode Directory (cont)

SUB-MODE	ITEM	DISPLAY	ITEM DESCRIPTION	COMMENT
MM	MOTORMASTER			
	MMR.S	X	Motormaster Select	Default: 0 0 = NONE 1 = LOW AMBIENT 2 = GREENSPEED
	P.GAN	XX.X	Head Pressure P Gain	Default: 1 Range: 1 to 4
	I.GAN	XX.X	Head Pressure I Gain	Default: 0.1 Range: -20 to 20
	D.GAN	XX.X	Head Pressure D Gain	Default: 0.0 GREENSPEED = 1.0 Range: -20 to 20
	MIN.S	XXX.X%	Minimum Fan Speed	Default: 5.0 Range: 0 to 100
RSET	RESET COOL TEMP			
	CRST	X	Cooling Reset Type	Default: 0 0 = No Reset 1 = 4 to 20 mA Input 2 = Outdoor Air Temperature 3 = Return Fluid 4 = Space Temperature
	MA.DG	XX.XΔF	4-20 - Degrees Reset	Default: 0.0 ΔF Range: -30 to 30 ΔF
	RM.NO	XXX.X° F	Remote - No Reset Temp	Default: 125 F Range: 0° to125 F
	RM.F	XXX.X° F	Remote - Full Reset Temp	Default: 0 F Range: 0° to125 F
	RM.DG	XX.X ΔF	Remote - Degrees Reset	Default: 0.0 ΔF Range: -30 to 30 ΔF
	RT.NO	XXX.XΔF	Return - No Reset Temp	Default: 10.0 ΔF Range: 0° to125 F
	RT.F	XXX.XΔF	Return - Full Reset Temp	Default: 10.0 ΔF Range: 0° to125 F
	RT.DG	XX.X ΔF	Return - Degrees Reset	Default: 0.0 ΔF Range: -30 to 30 ΔF
	DMDC	X	Demand Limit Select	Default: 0 0 = None 1 = Switch 2 - 4 to 20 mA Input 3 = CCN Loadshed
	DM20	XXX%	Demand Limit at 20 mA	Default: 100% Range: 0 to 100%
	SHNM	XXX	Loadshed Group Number	Default: 0 Range: 0 to 99
	SHDL	XXX%	Loadshed Demand Delta	Default: 0% Range: 0 to 60%
	SHTM	XXX MIN	Maximum Loadshed Time	Default: 60 minutes Range: 0 to 120 minutes
	DLS1	XXX.X%	Demand Limit Switch 1	Default: 80% Range: 0 to 100%
	DLS2	XXX.X%	Demand Limit Switch 2	Default: 50% Range: 0 to 100%
	LLEN	ENBL/DSBL	Lead/Lag Chiller Enable	Default: Disable
	MSSL	SLVE/MAST	Master/Slave Select	Default: Master
	SLVA	XXX	Slave Address	Default: 0 Range: 0 to 239
	LLBL	X	Lead/Lag Balance Select	Default: Master Leads 0 = Master Leads 1 = Slave Leads 2 = Automatic
	LLBD	XXX HRS	Lead/Lag Balance Delta	Default: 168 hours Range: 40 to 400 hours
	LLDY	XXX MIN	Lag Start Delay	Default: 5 minutes Range: 0 to 30 minutes
	PARA	YES	Parallel Configuration	Default: Yes (cannot be changed)

Configuration Mode and Sub-Mode Directory (cont)

SUB-MODE	ITEM	DISPLAY	ITEM DESCRIPTION	COMMENT
SLCT	SETPOINT AND RAMP LOAD			
	CLSP	X	Cooling Set Point Select	Default: 0 0 = Single 1 = Dual Switch 2 = Dual CCN Occupied 3 = 4 to 20 mA Input (requires EMM)
	RL.S	ENBL/DSBL	Ramp Load Select	Default: Enable
	CRMP	X.X° F	Cooling Ramp Loading	Default: 1.0 Range: 0.2 to 2
	SCHD	XX	Schedule Number	Default: 1 Range: 1 to 99
	Z.GN	X.X	Deadband Multiplier	Default: 1 Range: 1 to 4
SERV	SERVICE CONFIGURATION			
	EN.A1	ENBL/DSBL	Enable Compressor A1	
	EN.A2	ENBL/DSBL	Enable Compressor A2	
	EN.A3	ENBL/DSBL	Enable Compressor A3	
	EN.B1	ENBL/DSBL	Enable Compressor B1	
	EN.B2	ENBL/DSBL	Enable Compressor B2	
	EN.B3	ENBL/DSBL	Enable Compressor B3	
	REV.R	ENBL/DSBL	Reverse Rotation Enable	Default: Enabled
BCST	BROADCAST CONFIGURATION			
	T.D.BC	ON/OFF	CCN Time/Date Broadcast	Default: Off
	OAT.B	ON/OFF	CCN OAT Broadcast	Default: Off
	G.S.BC	ON/OFF	Global Schedule Broadcst	Default: Off
	BC.AK	ON/OFF	CCN Broadcast Ack'er	Default: Off

APPENDIX A — DISPLAY TABLES (cont)

Time Clock Mode and Sub-Mode Directory

SUB-MODE	ITEM	DISPLAY	ITEM DESCRIPTION	COMMENT
TIME	TIME OF DAY			
	HH.MM	XX.XX	Hour and Minute	Military (00:00 - 23:59)
DATE	MONTH, DATE, DAY, AND YEAR			
	MNTH	XX	Month of Year	1 - 12 (1 = January, 2 = February, etc.)
	DOM	XX	Day of Month	Range: 01 -31
	DAY	X	Day of Week	1 - 7 (1 = Monday, 2 = Tuesday, etc.)
	YEAR	XXXX	Year of Century	
DST	DAYLIGHT SAVINGS TIME			
	STR.M	XX	Month	Default: 4 Range 1- 12
	STR.W	X	Week	Default: 1 Range 1- 5
	STR.D	X	Day	Default: 7 Range 1- 7
	MIN.A	XX	Minutes to Add	Default: 60 Range 0 - 99
	STP.M	XX	Month	Default: 10 Range 1- 12
	STP.W	XX	Week	Default: 5 Range 1- 5
	STP.D	XX	Day	Default: 7 Range 1- 7
	MIN.S	XX	Minutes to Subtract	Default: 60 Range 0 - 99
HOL.L	LOCAL HOLIDAY SCHEDULES			
HD.01	HOLIDAY SCHEDULE 01			
	MON	XX	Holiday Start Month	
	DAY	XX	Start Day	
	LEN	XX	Duration (days)	
HD.02	HOLIDAY SCHEDULE 02			
	MON	XX	Holiday Start Month	1 - 12 (1 = January, 2 = February, etc.)
	DAY	XX	Start Day	01-31
	LEN	XX	Duration (days)	
HD.03	HOLIDAY SCHEDULE 03			
	MON	XX	Holiday Start Month	1 - 12 (1 = January, 2 = February, etc.)
	DAY	XX	Start Day	01-31
	LEN	XX	Duration (days)	
HD.04	HOLIDAY SCHEDULE 04			
	MON	XX	Holiday Start Month	1 - 12 (1 = January, 2 = February, etc.)
	DAY	XX	Start Day	01-31
	LEN	XX	Duration (days)	
HD.05	HOLIDAY SCHEDULE 05			
	MON	XX	Holiday Start Month	1 - 12 (1 = January, 2 = February, etc.)
	DAY	XX	Start Day	01-31
	LEN	XX	Duration (days)	
HD.06	HOLIDAY SCHEDULE 06			
	MON	XX	Holiday Start Month	1 - 12 (1 = January, 2 = February, etc.)
	DAY	XX	Start Day	01-31
	LEN	XX	Duration (days)	
HD.07	HOLIDAY SCHEDULE 07			
	MON	XX	Holiday Start Month	1 - 12 (1 = January, 2 = February, etc.)
	DAY	XX	Start Day	01-31
	LEN	XX	Duration (days)	
HD.08	HOLIDAY SCHEDULE 08			
	MON	XX	Holiday Start Month	1 - 12 (1 = January, 2 = February, etc.)
	DAY	XX	Start Day	01-31
	LEN	XX	Duration (days)	

APPENDIX A — DISPLAY TABLES (cont)

Time Clock Mode and Sub-Mode Directory (cont)

SUB-MODE	ITEM	DISPLAY	ITEM DESCRIPTION	COMMENT
HD.09	HOLIDAY SCHEDULE 09			
	MON	XX	Holiday Start Month	1 - 12 (1 = January, 2 = February, etc.)
	DAY	XX	Start Day	01-31
	LEN	XX	Duration (days)	
HD.10	HOLIDAY SCHEDULE 10			
	MON	XX	Holiday Start Month	1 - 12 (1 = January, 2 = February, etc.)
	DAY	XX	Start Day	01-31
	LEN	XX	Duration (days)	
HD.11	HOLIDAY SCHEDULE 11			
	MON	XX	Holiday Start Month	1 - 12 (1 = January, 2 = February, etc.)
	DAY	XX	Start Day	01-31
	LEN	XX	Duration (days)	
HD.12	HOLIDAY SCHEDULE 12			
	MON	XX	Holiday Start Month	1 - 12 (1 = January, 2 = February, etc.)
	DAY	XX	Start Day	01-31
	LEN	XX	Duration (days)	
HD.13	HOLIDAY SCHEDULE 13			
	MON	XX	Holiday Start Month	1 - 12 (1 = January, 2 = February, etc.)
	DAY	XX	Start Day	01-31
	LEN	XX	Duration (days)	
HD.14	HOLIDAY SCHEDULE 14			
	MON	XX	Holiday Start Month	1 - 12 (1 = January, 2 = February, etc.)
	DAY	XX	Start Day	01-31
	LEN	XX	Duration (days)	
HD.15	HOLIDAY SCHEDULE 15			
	MON	XX	Holiday Start Month	1 - 12 (1 = January, 2 = February, etc.)
	DAY	XX	Start Day	01-31
	LEN	XX	Duration (days)	
HD.16	HOLIDAY SCHEDULE 16			
	MON	XX	Holiday Start Month	1 - 12 (1 = January, 2 = February, etc.)
	DAY	XX	Start Day	01-31
	LEN	XX	Duration (days)	
HD.17	HOLIDAY SCHEDULE 17			
	MON	XX	Holiday Start Month	1 - 12 (1 = January, 2 = February, etc.)
	DAY	XX	Start Day	01-31
	LEN	XX	Duration (days)	
HD.18	HOLIDAY SCHEDULE 18			
	MON	XX	Holiday Start Month	1 - 12 (1 = January, 2 = February, etc.)
	DAY	XX	Start Day	01-31
	LEN	XX	Duration (days)	
HD.19	HOLIDAY SCHEDULE 19			
	MON	XX	Holiday Start Month	1 - 12 (1 = January, 2 = February, etc.)
	DAY	XX	Start Day	01-31
	LEN	XX	Duration (days)	

APPENDIX A — DISPLAY TABLES (cont)

Time Clock Mode and Sub-Mode Directory (cont)

SUB-MODE	ITEM	DISPLAY	ITEM DESCRIPTION	COMMENT
HD.20	HOLIDAY SCHEDULE 20			
	MON	XX	Holiday Start Month	1 - 12 (1 = January, 2 = February, etc.)
	DAY	XX	Start Day	01-31
	LEN	XX	Duration (days)	
HD.21	HOLIDAY SCHEDULE 21			
	MON	XX	Holiday Start Month	1 - 12 (1 = January, 2 = February, etc.)
	DAY	XX	Start Day	01-31
	LEN	XX	Duration (days)	
HD.22	HOLIDAY SCHEDULE 22			
	MON	XX	Holiday Start Month	1 - 12 (1 = January, 2 = February, etc.)
	DAY	XX	Start Day	01-31
	LEN	XX	Duration (days)	
HD.23	HOLIDAY SCHEDULE 23			
	MON	XX	Holiday Start Month	1 - 12 (1 = January, 2 = February, etc.)
	DAY	XX	Start Day	01-31
	LEN	XX	Duration (days)	
HD.24	HOLIDAY SCHEDULE 24			
	MON	XX	Holiday Start Month	1 - 12 (1 = January, 2 = February, etc.)
	DAY	XX	Start Day	01-31
	LEN	XX	Duration (days)	
HD.25	HOLIDAY SCHEDULE 25			
	MON	XX	Holiday Start Month	1 - 12 (1 = January, 2 = February, etc.)
	DAY	XX	Start Day	01-31
	LEN	XX	Duration (days)	
HD.26	HOLIDAY SCHEDULE 26			
	MON	XX	Holiday Start Month	1 - 12 (1 = January, 2 = February, etc.)
	DAY	XX	Start Day	01-31
	LEN	XX	Duration (days)	
HD.27	HOLIDAY SCHEDULE 27			
	MON	XX	Holiday Start Month	1 - 12 (1 = January, 2 = February, etc.)
	DAY	XX	Start Day	01-31
	LEN	XX	Duration (days)	
HD.28	HOLIDAY SCHEDULE 28			
	MON	XX	Holiday Start Month	1 - 12 (1 = January, 2 = February, etc.)
	DAY	XX	Start Day	01-31
	LEN	XX	Duration (days)	
HD.29	HOLIDAY SCHEDULE 29			
	MON	XX	Holiday Start Month	1 - 12 (1 = January, 2 = February, etc.)
	DAY	XX	Start Day	01-31
	LEN	XX	Duration (days)	
HD.30	HOLIDAY SCHEDULE 30			
	MON	XX	Holiday Start Month	1 - 12 (1 = January, 2 = February, etc.)
	DAY	XX	Start Day	01-31
	LEN	XX	Duration (days)	

APPENDIX A — DISPLAY TABLES (cont)

Time Clock Mode and Sub-Mode Directory (cont)

SUB-MODE	ITEM	DISPLAY	ITEM DESCRIPTION	COMMENT
SCH.N		0	Schedule Number	
SCH.L	LOCAL OCCUPANCY SCHEDULE			
PER.1	OCCUPANCY PERIOD 1			
	OCC.1	XX:XX	Period Occupied Time	Military (00:00 - 23:59)
	UNC.1	XX:XX	Period Unoccupied Time	Military (00:00 - 23:59)
	MON.1	YES/NO	Monday In Period	
	TUE.1	YES/NO	Tuesday In Period	
	WED.1	YES/NO	Wednesday In Period	
	THU.1	YES/NO	Thursday In Period	
	FRI.1	YES/NO	Friday In Period	
	SAT.1	YES/NO	Saturday In Period	
	SUN.1	YES/NO	Sunday In Period	
	HOL.1	YES/NO	Holiday In Period	
PER.2	OCCUPANCY PERIOD 2			
	OCC.2	XX:XX	Period Occupied Time	Military (00:00 - 23:59)
	UNC.2	XX:XX	Period Unoccupied Time	Military (00:00 - 23:59)
	MON.2	YES/NO	Monday In Period	
	TUE.2	YES/NO	Tuesday In Period	
	WED.2	YES/NO	Wednesday In Period	
	THU.2	YES/NO	Thursday In Period	
	FRI.2	YES/NO	Friday In Period	
	SAT.2	YES/NO	Saturday In Period	
	SUN.2	YES/NO	Sunday In Period	
	HOL.2	YES/NO	Holiday In Period	
PER.3	OCCUPANCY PERIOD 3			
	OCC.3	XX:XX	Period Occupied Time	Military (00:00 - 23:59)
	UNC.3	XX:XX	Period Unoccupied Time	Military (00:00 - 23:59)
	MON.3	YES/NO	Monday In Period	
	TUE.3	YES/NO	Tuesday In Period	
	WED.3	YES/NO	Wednesday In Period	
	THU.3	YES/NO	Thursday In Period	
	FRI.3	YES/NO	Friday In Period	
	SAT.3	YES/NO	Saturday In Period	
	SUN.3	YES/NO	Sunday In Period	
	HOL.3	YES/NO	Holiday In Period	
PER.4	OCCUPANCY PERIOD 4			
	OCC.4	XX:XX	Period Occupied Time	Military (00:00 - 23:59)
	UNC.4	XX:XX	Period Unoccupied Time	Military (00:00 - 23:59)
	MON.4	YES/NO	Monday In Period	
	TUE.4	YES/NO	Tuesday In Period	
	WED.4	YES/NO	Wednesday In Period	
	THU.4	YES/NO	Thursday In Period	
	FRI.4	YES/NO	Friday In Period	
	SAT.4	YES/NO	Saturday In Period	
	SUN.4	YES/NO	Sunday In Period	
	HOL.4	YES/NO	Holiday In Period	
PER.5	OCCUPANCY PERIOD 5			
	OCC.5	XX:XX	Period Occupied Time	Military (00:00 - 23:59)
	UNC.5	XX:XX	Period Unoccupied Time	Military (00:00 - 23:59)
	MON.5	YES/NO	Monday In Period	
	TUE.5	YES/NO	Tuesday In Period	
	WED.5	YES/NO	Wednesday In Period	
	THU.5	YES/NO	Thursday In Period	
	FRI.5	YES/NO	Friday In Period	
	SAT.5	YES/NO	Saturday In Period	
	SUN.5	YES/NO	Sunday In Period	
	HOL.5	YES/NO	Holiday In Period	

Time Clock Mode and Sub-Mode Directory (cont)

SUB-MODE	ITEM	DISPLAY	ITEM DESCRIPTION	COMMENT
PER.6	OCCUPANCY PERIOD 6			
	OCC.6	XX:XX	Period Occupied Time	Military (00:00 - 23:59)
	UNC.6	XX:XX	Period Unoccupied Time	Military (00:00 - 23:59)
	MON.6	YES/NO	Monday In Period	
	TUE.6	YES/NO	Tuesday In Period	
	WED.6	YES/NO	Wednesday In Period	
	THU.6	YES/NO	Thursday In Period	
	FRI.6	YES/NO	Friday In Period	
	SAT.6	YES/NO	Saturday In Period	
	SUN.6	YES/NO	Sunday In Period	
	HOL.6	YES/NO	Holiday In Period	
PER.7	OCCUPANCY PERIOD 7			
	OCC.7	XX:XX	Period Occupied Time	Military (00:00 - 23:59)
	UNC.7	XX:XX	Period Unoccupied Time	Military (00:00 - 23:59)
	MON.7	YES/NO	Monday In Period	
	TUE.7	YES/NO	Tuesday In Period	
	WED.7	YES/NO	Wednesday In Period	
	THU.7	YES/NO	Thursday In Period	
	FRI.7	YES/NO	Friday In Period	
	SAT.7	YES/NO	Saturday In Period	
	SUN.7	YES/NO	Sunday In Period	
	HOL.7	YES/NO	Holiday In Period	
PER.8	OCCUPANCY PERIOD 8			
	OCC.8	XX:XX	Period Occupied Time	Military (00:00 - 23:59)
	UNC.8	XX:XX	Period Unoccupied Time	Military (00:00 - 23:59)
	MON.8	YES/NO	Monday In Period	
	TUE.8	YES/NO	Tuesday In Period	
	WED.8	YES/NO	Wednesday In Period	
	THU.8	YES/NO	Thursday In Period	
	FRI.8	YES/NO	Friday In Period	
	SAT.8	YES/NO	Saturday In Period	
	SUN.8	YES/NO	Sunday In Period	
	HOL.8	YES/NO	Holiday In Period	
OVR	SCHEDULE OVERRIDE			
	OVR.T	X HRS	Timed Override Hours	Default: 0 Range 0-4 hours
	OVR.L	X HRS	Override Time Limit	Default: 0 Range 0-4 hours
	T.OVR	YES/NO	Timed Override	User Entry

APPENDIX A — DISPLAY TABLES (cont)

Operating Mode and Sub-Mode Directory

SUB-MODE	ITEM	DISPLAY	ITEM DESCRIPTION	COMMENT
MODE	MODES CONTROLLING UNIT			
	MD01	ON/OFF	CSM Controlling Chiller	
	MD02	ON/OFF	WSM Controlling Chiller	
	MD03	ON/OFF	Master/Slave Control	
	MD05	ON/OFF	Ramp Load Limited	
	MD06	ON/OFF	Timed Override in effect	
	MD07	ON/OFF	Low Cooler Suction TempA	
	MD08	ON/OFF	Low Cooler Suction TempB	
	MD09	ON/OFF	Slow Change Override	
	MD10	ON/OFF	Minimum OFF time active	
	MD13	ON/OFF	Dual Set Point	
	MD14	ON/OFF	Temperature Reset	
	MD15	ON/OFF	Demand/Sound Limited	
	MD16	ON/OFF	Cooler Freeze Protection	
	MD17	ON/OFF	Low Temperature Cooling	
	MD18	ON/OFF	High Temperature Cooling	
	MD19	ON/OFF	Making Ice	
	MD20	ON/OFF	Storing Ice	
	MD21	ON/OFF	High SCT Circuit A	
	MD22	ON/OFF	High SCT Circuit B	
	MD23	ON/OFF	Minimum Comp. On Time	
	MD24	ON/OFF	Pump Off Delay Time	
	MD25	ON/OFF	Low Sound Mode	
	MDAO	ON/OFF	Circuit A Trio Oil MGMT	
	MDBO	ON/OFF	Circuit B Trio Oil MGMT	
	MD.OL	ON/OFF	OAT Lockout in effect	

Alarms Mode and Sub-Mode Directory

SUB-MODE	ITEM	DISPLAY	ITEM DESCRIPTION	COMMENT
CRNT	CURRENTLY ACTIVE ALARMS			
	AXXX TXXX PXXX		Current Alarms 1-25	Alarms are shown as AXXX Alerts are shown as TXXX
RCRN	YES/NO		Reset All Current Alarms	
HIST	ALARM HISTORY			
	AXXX TXXX PXXX		Alarm History 1-20	Alarms are shown as AXXX Alerts are shown as TXXX

APPENDIX B — CCN TABLES

CCN DISPLAY TABLES — A_UNIT (General Unit Parameters)

DESCRIPTION	VALUE	UNITS	POINT NAME	FORCIBLE
Control Mode	0 = Test 1 = Local Off 2 = CCN Off 3 = Clock Off 4 = Emergency Stop 5 = Local On 6 = CCN On 7 = Clock On 8 = Heat Enabled 9 = Pump Delay		STAT	N
Occupied	No/Yes		OCC	N
CCN Chiller	Start/Stop		CHIL_S_S	Y
Low Sound Active	No/Yes		LSACTIVE	N
Alarm State	Normal/Alert/Alarm		ALM	N
Active Demand Limit	0 to 100	%	DEM_LIM	Y
Override Modes in Effect	No/Yes		MODE	N
Percent Total Capacity	0 to 100	%	CAP_T	N
Requested Stage	0 to 99		STAGE	N
Internal Active Set Point	–20 to 70	°F	SP	N
Control Point	–20 to 70	°F	CTRL_PNT	Y
Entering Fluid Temp	snnn.n	°F	EWT	N
Leaving Fluid Temp	snnn.n	°F	LWT	N
Emergency Stop	Enable/Emstop	Enable	EMSTOP	Y
Minutes Left for Start	00:00 to 15:00	minutes	MIN_LEFT	N
PUMPS				
Cooler Pump Relay 1	Off/On		COOLPMP1	N
Cooler Pump Relay 2	Off/On		COOLPMP2	N
Cooler Pump 1 Interlock	Open/Close		PMP1_FBK	N
Cooler Pump 2 Interlock	Open/Close		PMP2_FBK	N
Cooler Flow Switch	Open/Close		COOLFLOW	N
Lead Pump	No Pump/Pump 1/Pump 2		LEADPUMP	N
Rotate Cooler Pumps Now	No/Yes		ROT_PUMP	Y
Heat/Cool Select	Heat/Cool		HC_SEL	N
Total Available Capacity	0-200.0	Tons	CALCTONS	Y

CCN DISPLAY TABLES — CIRCA_AN (Circuit A Analog Parameters)

DESCRIPTION	VALUE	UNITS	POINT NAME
CIRCUIT A ANALOG VALUES			
Percent Total Capacity	0-100	%	CAPA_T
Percent Available Cap.	0-100	%	CAPA_A
Discharge Pressure	nnn.n	PSIG	DP_A
Suction Pressure	nnn.n	PSIG	SP_A
Head Setpoint	nnn.n	°F	HSP
Saturated Condensing Tmp	snnn.n	°F	TMP_SCTA
Saturated Suction Temp	snnn.n	°F	TMP_SSTA
Average SST last 15 sec	snnn.n	°F	SSTA_AVG
Instantaneous SSTA	snnn.n	°F	TMPISSTA
EXV% Open	nnn	%	EXV_A
Var Head Press Output A	nnn.n	milliamps	VHPA_ACT
Compr Return Gas Temp	nnn.n	°F	TMP_RGTA
Discharge Gas Temp	nnn.n	°F	DISGAS
Suction Superheat Temp	nnn.n	ΔF	SH_A
Spare 1 Temperature	nnn.n	°F	SPR1_TMP

CCN DISPLAY TABLES — CIRCADIO (Circuit A Discrete Inputs/Outputs)

DESCRIPTION	VALUE	UNITS	POINT NAME
CIRC. A DISCRETE OUTPUTS			
Compressor A1 Relay	Off		K_A1_RLY
Comp A1 Unload Time	0	sec	A1UNLTME
Compressor A2 Relay	Off		K_A2_RLY
Compressor A3 Relay	Off		K_A3_RLY
Minimum Load Valve Relay	Off		MLV_RLY
Crankcase Heater Circ A	On		CCHA
CIRC. A DISCRETE INPUTS			
Compressor A1 Feedback	Off		K_A1_FBK
Compressor A2 Feedback	Off		K_A2_FBK
Compressor A3 Feedback	Off		K_A3_FBK

CCN DISPLAY TABLES — CIRCB_AN (Circuit B Analog Parameters)

DESCRIPTION	VALUE	UNITS	POINT NAME	FORCIBLE
CIRCUIT B ANALOG VALUES				
Percent Total Capacity	0-100	%	CAPB_T	N
Percent Available Cap.	0-100	%	CAPB_A	N
Discharge Pressure	nnn.n	PSIG	DP_B	N
Suction Pressure	nnn.n	PSIG	SP_B	N
Head Setpoint	nnn.n	°F	HSP	N
Saturated Condensing Tmp	snnn.n	°F	TMP_SCTB	N
Saturated Suction Temp	snnn.n	°F	TMP_SSTB	N
EXV% Open	nnn	%	EXV_B	N
Var Head Press Output B	nnn.n	milliamps	VHPB_ACT	N
Compr Return Gas Temp	nnn.n	°F	TMP_RGTB	N
Suction Superheat Temp	nnn.n	ΔF	SH_B	N
Spare 2 Temperature	nnn.n	°F	SPR2_TMP	N

CCN DISPLAY TABLES — CIRCBDIO (Circuit B Discrete Inputs/Outputs)

DESCRIPTION	VALUE	UNITS	POINT NAME
CIRC. B DISCRETE OUTPUTS			
Compressor B1 Relay	Off		K_B1_RLY
Compressor B2 Relay	Off		K_B2_RLY
Compressor B3 Relay	Off		K_B3_RLY
Minimum Load Valve Relay	Off		MLV_RLY
Crankcase Heater Circ B	On		CCHB
CIRC. B DISCRETE INPUTS			
Compressor B1 Feedback	Off		K_B1_FBK
Compressor B2 Feedback	Off		K_B2_FBK
Compressor B3 Feedback	Off		K_B3_FBK

CCN DISPLAY TABLES — OPTIONS (Unit Parameters)

DESCRIPTION	VALUE	UNITS	POINT NAME
FANS			
Fan 1 Relay	Off		FAN_1
Fan 2 Relay	Off		FAN_2
Fan 3 Relay	Off		FAN_3
Fan 4 Relay	Off		FAN_4
Fan 5 Relay	Off		FAN_5
Fan 6 Relay	Off		FAN_6
Fan 7 Relay	Off		FAN_7
Fan 8 Relay	Off		FAN_8
Cooler/Pump Heater	Off		COOL_HTR
UNIT ANALOG VALUES			
Cooler Entering Fluid	snnn.n	°F	COOL_EWT
Cooler Leaving Fluid	snnn.n	°F	COOL_LWT
Average Entering Fluid	snnn.n	°F	EWTAVG
Average Leaving Fluid	snnn.n	°F	LWTAVG
Lowest LWT in 15 Seconds	snnn.n	°F	LWTLOW
Lead/Lag Leaving Fluid	snnn.n	°F	DUAL_LWT
TEMPERATURE RESET			
4-20 mA Reset Signal	nn.n	mA	RST_MA
Outside Air Temperature	snnn.n	°F	OAT
Space Temperature	snnn.n	°F	SPT
DEMAND LIMIT			
4-20 mA Demand Signal	nn.n	mA	LMT_MA
Demand Limit Switch 1	Off		DMD_SW1
Demand Limit Switch 2	Off		DMD_SW2
CCN Loadshed Signal	0 = Normal 1 = Redline 2 = Loadshed		DL_STAT
MISCELLANEOUS			
Heat Request	On		HEAT_REQ
Dual Setpoint Switch	On		DUAL_IN
Cooler LWT Setpoint	snnn.n	°F	LWT_SP
Ice Done	Off		ICE_DONE

CCN CONFIGURATION TABLES — UNIT (Unit Configuration)

DESCRIPTION	VALUE	DEFAULT	UNITS	POINT NAME
Unit Size	nnn		tons	SIZE
Compressor A1 Size	nnn	Automatically configured dependent on unit size	tons	SIZE_A1
Compressor A2 Size	nnn		tons	SIZE_A2
Compressor A3 Size	nnn		tons	SIZE_A3
Compressor B1 Size	nnn		tons	SIZE_B1
Compressor B2 Size	nnn		tons	SIZE_B2
Compressor B3 Size	nnn		tons	SIZE_B3
Suction Superheat Setpt	nn.n	9.0	ΔF	SH_SP
Number of Fans	n	Dependent on unit size		FAN_TYPE
Compressor A1 Digital?	No/Yes	No		CPA1TYPE
Maximum A1 Unload Time	nn	12	sec	MAXULTME
Unit Produced On or After 2214?	No/Yes	Yes		FAN_SEQ
Unit Voltage	nnn	Unit dependent 200, 230, 380, 400, 460, 575	volts	UNITVOLT
Num Poles in Fan Motor	8	8		FANPOLES

CCN CONFIGURATION TABLES — OPTIONS1 (Options 1 Configuration)

DESCRIPTION	VALUE	DEFAULT	UNITS	POINT NAME
Cooler Fluid	1 = Water 2 = Med. Brine	1		FLUIDTYP
Minimum Load Vlv Select	No/Yes	No		MLV_FLG
CSB Board Enable	Dsable/Enable	Enable		CSB_ENA
Cooler Pump Control	Off/On	Off		CPC
Cooler Pmp Continuous ON	No/Yes	No		PUMPOPER
Pump High Temp Cut Off	95 to 125	95.0	°F	PUMPHTCO
Cooler Pump 1 Enable	No/Yes	No		PMP1_ENA
Cooler Pump 2 Enable	No/Yes	No		PMP2_ENA
Cooler Pmp Periodic Strt	No/Yes	No		PUMP_PST
Cooler Pump Select	0 = Automatic, 1 = Pump 1, 2 = Pump 2	0		PMP_SLCT
Cooler Pump Shutdown Dly	0 to 10	1	minutes	PUMP_DLY
Pump Changeover Hours	10 to 2000	500	hours	PMP_DLTA
EMM Module Installed	No/Yes*	No		EMM_BRD
Cnd HX Typ: 0=RTPF 1=MCHX	0/1	1		COILTYPE
EXV MOP Set Point	nn.n	50	°F	MOP_SP
Config Approach Setpoint	nn.n	9.0	°F	IAPPROSP

*EMM is automatically configured to Yes when an option requiring the EMM is configured.

CCN CONFIGURATION TABLES — OPTIONS2 (Options 2 Configuration)

DESCRIPTION	VALUE	DEFAULT	UNITS	POINT NAME
Control Method	0 = Switch 2 = Occupancy 3 = CCN	0		CONTROL
Loading Sequence Select	1 = Equal Loading 2 = Staged Loading	1		SEQ_TYP
Lead/Lag Circuit Select	1 = Automatic 2 = Circuit A Leads 3 = Circuit B Leads	1		LEAD_TYP
Cooling Setpoint Select	0 = Single 1 = Dual, remote switch controlled 2 = Dual CCN occupancy 3 = 4-20 mA input	0		CLSP_TYP
Ramp Load Select	Enable/Dsable	Enable		RAMP_EBL
Heat Cool Select	Cool/Heat	Cool		HEATCOOL
High LCW Alert Limit	2 to 60	60.0	ΔF	LCW_LMT
Minutes off time	0 to 15	0	min	DELAY
Deadband Multiplier	1.0 to 4.0	1.0		Z_GAIN
Ice Mode Enable	Enable/Dsable	Dsable		ICE_CNFG
Low Sound Mode Select	0 = Disabled 1 = Fan only 2 = Capacity/Fans	0		LS_MODE
Low Sound Start Time	00:00 to 23:59	00:00		LS_START
Low Sound End Time	00:00 to 23:59	00:00		LS_END
Low Sound Capacity Limit	0 to 100	100	%	LS_LIMIT
Alarm Relay Usage	0 = Alts & Alrms 1 = Alarms Only 2 = Off	0		ALRMCNFG
Service Trio Enable	Enable/Dsable	Dsable		SER_TRIO

CCN CONFIGURATION TABLES — SCHEDOVR (Timed Override Setup)

DESCRIPTION	VALUE	DEFAULT	UNITS	POINT NAME
Schedule Number	0 to 99	1		SCHEDNUM
Override Time Limit	0 to 4	0	hours	OTL
Timed Override Hours	0 to 4	0	hours	OVR_EXT
Timed Override	No/Yes	No		TIMEOVER

CCN CONFIGURATION TABLES — RESETCON (Temperature Reset and Demand Limit)

DESCRIPTION	VALUE	DEFAULT	UNITS	POINT NAME
COOLING RESET				
Cooling Reset Type	0 = No Reset 1 = 4-20 mA input 2 = External temp – OAT 3 = Return Fluid 4 = External temp - SPT	0		CRST_TYP
4-20 MA RESET				
4-20 – Degrees Reset	–30 to 30	0.0	ΔF	420_DEG
REMOTE RESET				
Remote – No Reset Temp	0 to 125	125.0	°F	REM_NO
Remote – Full Reset Temp	0 to 125	0.0	°F	REM_FULL
Remote – Degrees Reset	–30 to 30	0.0	ΔF	REM_DEG
RETURN TEMPERATURE RESET				
Return – No Reset Temp	0 to 125	10.0	ΔF	RTN_NO
Return – Full Reset Temp	0 to 125	0.0	ΔF	RTN_FULL
Return – Degrees Reset	–30 to 30	0.0	ΔF	RTN_DEG
DEMAND LIMIT				
Demand Limit Select	0 = None 1 = External switch input 2 = 4-20 mA input 3 = Loadshed	0		DMD_CTRL
Demand Limit at 20 mA	0 to 100	100	%	DMT20MA
Loadshed Group Number	0 to 99	0		SHED_NUM
Loadshed Demand Delta	0 to 60	0	%	SHED_DEL
Maximum Loadshed Time	0 to 120	60	minutes	SHED_TIM
Demand Limit Switch 1	0 to 100	80	%	DLSWSP1
Demand Limit Switch 2	0 to 100	50	%	DLSWSP2

CCN CONFIGURATION TABLES — DUALCHIL (Dual Chiller Configuration Settings)

DESCRIPTION	VALUE	DEFAULT	UNITS	POINT NAME
LEAD/LAG				
Lead/Lag Chiller Enable	Enable/Dsable	Dsable		LL_ENA
Master/Slave Select	Master/Slave	Master		MS_SEL
Slave Address	0 to 239	2		SLV_ADDR
Lead/Lag Balance Select	0 = None	0		LL_BAL
Lead/Lag Balance Delta	40 to 400	168	hours	LL_BAL_D
Lag Start Delay	0 to 30	5	minutes	LL_DELAY
Parallel Configuration	Yes	Yes		PARALLEL

CONFIGURATION DISPLAY TABLES

TABLE	DISPLAY NAME	RANGE	DEFAULT	UNITS	POINT NAME
ALARMDEF/ ALARMS01	Alarm Routing Control	0 or 1 for each position	00000000		ALRM_CNT
	Alarm Equipment Priority	0-7	4		EQP_TYP
	Comm Failure Retry Time	1-240	10	min	RETRY_TM
	Realarm Time	1-255	30	min	RE_ALARM
	Alarm System Name	8 chars	CHILLER		ALRM_NAM
BRODEFS/ BROCASTS	CCN Time/Date Broadcast	Yes/No	No		CCNBC
	CCN OAT Broadcast	Yes/No	No		OATBC
	Global Schedule Broadcast	Yes/No	No		GSBC
	CCN Broadcast Ack'er	Yes/No	No		CCNBCACK
	Daylight Savings Start:				
	Month	1 to 12	3	month	STARTM
	Week	1 to 5	2	week	STARTW
	Day	1 to 7	7	day	STARTD
	Minutes to Add	0 to 90	60	min	MINADD
	Daylight Savings Start:				
	Month	1 to 12	11	month	STOPM
	Week	1 to 5	1	week	STOPW
	Day	1 to 7	7	day	STOPD
	Minutes to Add	0 to 90	60	min	MINSUB

CCN CONFIGURATION TABLES — DISPLAY (Marquee Display SETUP)

DESCRIPTION	VALUE	DEFAULT	UNITS	POINT NAME
Service Password	nnnn	1111		PASSWORD
Password Enable	Enable/Disable	Enable		PASS_EBL
Metric Display	Off/On	Off		DISPUNIT
Language Selection	0 = ENGLISH 1 = FRANCAIS 2 = ESPANOL 3 = PORTUGUES	0		LANGUAGE

CCN CONFIGURATION TABLES — EXVACONF (EXV Circuit A Configuration)

DESCRIPTION	VALUE	DEFAULT	UNITS	POINT NAME
EXV Opening at Low LWT	nnn.n	25	%	EXV_Y1
LWT for EXV Min Opening	nnn.n	10	°F	LWT_X1
EXV Opening at High LWT	nnn.n	50	%	EXV_Y2
LWT for EXV Max Opening	nnn.n	35	°F	LWT_X2
EXV Circ. A Min Position	nnn.n	2	%	EXVAMINP
EXVA Steps in Range	nnnnn	2500	steps	EXVARANG
EXVA Steps Per Second	nnnnn	150		EXVARATE
EXVA Fail Position In %	nnnn.nn	0	%	EXVAPOSF
EXVA Minimum Steps	nnnnn	0	steps	EXVAMINS
EXVA Maximum Steps	nnnnn	2500	steps	EXVAMAXS
EXVA Overrun Steps	nnnnn	167	steps	EXVAOVRS
EXVA Stepper Type	nnn	1		EXVATYPE
High SCT Threshold	nnn.n	115	°F	HIGH_SCT
Open EXV X% on 2nd comp	nnn.n	10	%	EXV_HSCT
Move EXV X% on DISCRSOL	nnn.n	5	%	EXVDISCR
Pre-Open EXV Fan Adding	nnn.n	10	%	EXV_AFAN
Pre-Close EXV Fan Sub	nnn.n	10	%	EXV_MFAN
Pre-Close EXV Lag shut	nnn.n	10	%	EXV_SLAG
Lag Start Delay	nnn	10	sec	DELAYLAG
SH Reset Maximum	nnn.n	11	^F	MAXSHRST
Cap at SH Offset Maximum	nnn.n	25	%	SHRSTBGN
SH Rate Threshold	nnn.n	0.2	^F	SHR_THR
Low SH DeltaT EXV Move	nnn	60	sec	LSH_DL_T
Low SH Override EXV Move	nnn.n	1	%	LSH_EXVM

CCN CONFIGURATION TABLES — EXVBCONF (EXV Circuit B Configuration)

DESCRIPTION	VALUE	DEFAULT	UNITS	POINT NAME
EXV Circ. B Min Position	nnn.n	2	%	EXVBMINP
EXVB Steps in Range	nnnnn	2500	steps	EVXBRANG
EXVB Steps Per Second	nnnnn	150		EXVBRATE
EXVB Fail Position in %	nnnn.nn	0	%	EXVBPOSF
EXVB Minimum Steps	nnnnn	0	steps	EXVBMINS
EXVB Maximum Steps	nnnnn	2500	steps	EXVBMAXS
EXVB Overrun Steps	nnnnn	167	steps	EXVBOVRS
EXVB Stepper Type	nnn	1		EXVBTYPE

CCN CONFIGURATION TABLES — MM_CONF (Motormaster Configuration)

DESCRIPTION	VALUE	DEFAULT	UNITS	POINT NAME
Motormaster Select	0 = NONE 1 = LOW AMBIENT 2 = GREENSPEED	0 = NONE		MM_SLCT
Head Pressure P Gain	nnn.n	1.0		HP_PGAIN
Head Pressure I Gain	nnn.n	0.1		HP_IGAIN
Head Pressure D Gain	LOW AMBIENT 0.0 GREENSPEED 1.0	0.0		HP_DGAIN
Minimum Fan Speed	nnn.n	5.0	%	MIN_VHP

CCN SERVICE TABLES — SERVICE

DESCRIPTION	VALUE	DEFAULT	UNITS	POINT NAME
SERVICE				
Brine Freeze Point	nnn.n	34.0	°F	BRN_FRZ
Pump Service Interval	nnnnn	876.0	hours	SI_PUMPS
COMPRESSOR ENABLE				
Enable Compressor A1	Disable/Enable	Dependent on unit size		ENABLEA1
Enable Compressor A2	Disable/Enable	Dependent on unit size		ENABLEA2
Enable Compressor A3	Disable/Enable	Dependent on unit size		ENABLEA3
Enable Compressor B1	Disable/Enable	Dependent on unit size		ENABLEB1
Enable Compressor B2	Disable/Enable	Dependent on unit size		ENABLEB2
Enable Compressor B3	Disable/Enable	Dependent on unit size		ENABLEB3
Reverse Rotation Enable	Disable/Enable	Enable		REVR_VER

CCN SETPOINT TABLES — SETPOINT

DESCRIPTION	VALUE	DEFAULT	UNITS	POINT NAME
COOLING				
Cooling Setpoint 1	14 to 70	44.0	°F	CSP1
Cooling Setpoint 2	14 to 70	44.0	°F	CSP2
ICE Setpoint	14 to 32	32.0	°F	CSP3
RAMP LOADING				
Cooling Ramp Loading	0.2 to 2.0	1.0		CRAMP
Brine Freeze Point	–20 to 34	34.0	°F	BRN_FRZ
Head Setpoint	85 to 120	95.0	°F	HSP
Fan On Set Point		95.0	°F	FANONSP
Fan Off Set Point		72.0	°F	FANOFFSP
Fan Stage Delta	0 to 50	15.0	°F	FSTGDLTA
Base Fan Off Delta Temp	10 to 50	23.0	°F	B_FANOFF
OAT Lockout Temp	–28.9 to 48.9	–20	°F	OAT_LOCK

CCN MAINTENANCE TABLES — CIRA_EXV

DESCRIPTION	VALUE	UNITS	POINT NAME
EXV % Open	nnn	%	EXV_A
Circuit A Approach	nnn.n	delta F	CIRA_APP
Approach Setpoint	nnn.n	delta F	APPRA_SP
EXVA Override	nnnnn		EXVAOVRR
Suction Superheat Temp	nnn.n	delta F	SH_A
Active Superheat Setpt	nn.n	delta F	ACTSH_SP
Active MOP Setpt	nn.n	delta F	ACMOP_SP
Cir A EXV Position Limit	nnn	%	PLMA

CCN MAINTENANCE TABLES — CIRB_EXV

DESCRIPTION	VALUE	UNITS	POINT NAME
EXV % Open	nnn	%	EXV_B
Circuit B Approach	nnn.n	delta F	CIRB_APP
Approach Setpoint	nnn.n	delta F	APPRB_SP
EXVB Override	nnnnn		EXVBOVRR
Suction Superheat Temp	nnn.n	delta F	SH_B
Active Superheat Setpt	nn.n	delta F	ACTSH_SP
Active MOP Setpt	nn.n	delta F	ACMOP_SP
Cir B EXV Position Limit	nnn	%	PLMB

CCN MAINTENANCE TABLES — STRTHOUR

DESCRIPTION	VALUE	UNITS	POINT NAME
Machine Operating Hours	nnnnnn	hours	HR_MACH
Machine Starts	nnnnnn		CY_MACH
Circuit A Run Hours	nnnnnn	hours	HR_CIRA
Compressor A1 Run Hours	nnnnnn	hours	HR_A1
Compressor A2 Run Hours	nnnnnn	hours	HR_A2
Compressor A3 Run Hours	nnnnnn	hours	HR_A3
Circuit B Run Hours	nnnnnn	hours	HR_CIRB
Compressor B1 Run Hours	nnnnnn	hours	HR_B1
Compressor B2 Run Hours	nnnnnn	hours	HR_B2
Compressor B3 Run Hours	nnnnnn	hours	HR_B3
Circuit A Starts	nnnnnn		CY_CIRA
Compressor A1 Starts	nnnnnn		CY_A1
Compressor A2 Starts	nnnnnn		CY_A2
Compressor A3 Starts	nnnnnn		CY_A3
Circuit B Starts	nnnnnn		CY_CIRB
Compressor B1 Starts	nnnnnn		CY_B1
Compressor B2 Starts	nnnnnn		CY_B2
Compressor B3 Starts	nnnnnn		CY_B3
PUMP HOURS			
Pump 1 Run Hours	nnnnnn	hours	HR_PUMP1
Pump 2 Run Hours	nnnnnn	hours	HR_PUMP2

CCN MAINTENANCE TABLES — CURRMODS

DESCRIPTION	VALUE	POINT NAME
CSM controlling Chiller	On/Off	MODE_1
WSM controlling Chiller	On/Off	MODE_2
Master/Slave control	On/Off	MODE_3
Ramp Load Limited	On/Off	MODE_5
Timed Override in effect	On/Off	MODE_6
Low Cooler Suction TempA	On/Off	MODE_7
Low Cooler Suction TempB	On/Off	MODE_8
Slow Change Override	On/Off	MODE_9
Minimum OFF time active	On/Off	MODE_10
Dual Setpoint	On/Off	MODE_13
Temperature Reset	On/Off	MODE_14
Demand/Sound Limited	On/Off	MODE_15
Cooler Freeze Protection	On/Off	MODE_16
Low Temperature Cooling	On/Off	MODE_17
High Temperature Cooling	On/Off	MODE_18
Making ICE	On/Off	MODE_19
Storing ICE	On/Off	MODE_20
High SCT Circuit A	On/Off	MODE_21
High SCT Circuit B	On/Off	MODE_22
Minimum Comp. On Time	On/Off	MODE_23
Pump Off Delay Time	On/Off	MODE_24
Low Sound Mode	On/Off	MODE_25
Circuit A Trio Oil Mgmt	On/Off	MD_A_OIL
Circuit B Trio Oil Mgmt	On/Off	MD_B_OIL
OAT Lockout in effect	On/Off	MD_OATL

CCN MAINTENANCE TABLES — VFD1

DESCRIPTION	VALUE	UNITS	POINT NAME
Unit Voltage	460	Volts	UNITVOLT
Num Poles in Fan Motor	8		FANPOLES
Fan Control Select	0		MM_SLCT
VFD1 Comm Fail Count	0		VF1CFAIL
Danfoss VFD Command	0	%	VFD1CMD
Danfoss VFD Status Word	0		VFD1STAT
Danfoss VFD Voltage	0	Volts	VFD1VLTS
Danfoss VFD Freq HZ	0		VFD1_HZ
Danfoss VFD Power	0	kW	VFD1_PWR
Danfoss VFD Freq Percent	0	%	VFD1_PCT
Danfoss VFD Speed RPM	0		VFD1_RPM

CCN MAINTENANCE TABLES — ALARMS

DESCRIPTION	VALUE	POINT NAME
Active Alarm #1	AXXX or TXXX	ALARM01C
Active Alarm #2	AXXX or TXXX	ALARM02C
Active Alarm #3	AXXX or TXXX	ALARM03C
Active Alarm #4	AXXX or TXXX	ALARM04C
Active Alarm #5	AXXX or TXXX	ALARM05C
Active Alarm #6	AXXX or TXXX	ALARM06C
Active Alarm #7	AXXX or TXXX	ALARM07C
Active Alarm #8	AXXX or TXXX	ALARM08C
Active Alarm #9	AXXX or TXXX	ALARM09C
Active Alarm #10	AXXX or TXXX	ALARM10C
Active Alarm #11	AXXX or TXXX	ALARM11C
Active Alarm #12	AXXX or TXXX	ALARM12C
Active Alarm #13	AXXX or TXXX	ALARM13C
Active Alarm #14	AXXX or TXXX	ALARM14C
Active Alarm #15	AXXX or TXXX	ALARM15C
Active Alarm #16	AXXX or TXXX	ALARM16C
Active Alarm #17	AXXX or TXXX	ALARM17C
Active Alarm #18	AXXX or TXXX	ALARM18C
Active Alarm #19	AXXX or TXXX	ALARM19C
Active Alarm #20	AXXX or TXXX	ALARM20C
Active Alarm #21	AXXX or TXXX	ALARM21C
Active Alarm #22	AXXX or TXXX	ALARM22C
Active Alarm #23	AXXX or TXXX	ALARM23C
Active Alarm #24	AXXX or TXXX	ALARM24C
Active Alarm #25	AXXX or TXXX	ALARM25C

CCN MAINTENANCE TABLES — VERSIONS

DESCRIPTION	VERSION	VALUE
EXV	CESR131172-	nn-nn
AUX	CESR131333-	nn-nn
MBB	CESR131460-	nn-nn
EMM	CESR131174-	nn-nn
MARQUEE	CESR131171-	nn-nn
NAVIGATOR	CESR130227-	nn-nn
CXB	CESR131173-	nn_nn

CCN MAINTENANCE TABLES — LOADFACT

DESCRIPTION	VALUE	UNITS	POINT NAME
CAPACITY CONTROL			
Load/Unload Factor	snnn.n		SMZ
Control Point	snnn.n	°F	CTRL_PNT
Entering Fluid Temp	snnn.n	°F	EWT
Leaving Fluid Temp	snnn.n	°F	LWT
Ramp Load Limited	On/Off		MODE_5
Slow Change Override	On/Off		MODE_9
Cooler Freeze Protection	On/Off		MODE_16
Low Temperature Cooling	On/Off		MODE_17
High Temperature Cooling	On/Off		MODE_18
Minimum Comp. On Time	On/Off		MODE_23

CCN MAINTENANCE TABLES — PM-PUMP

DESCRIPTION	VALUE	UNITS	POINT NAME
Pump Service Interval	nnnnnn	hours	SI_PUMPS
Pump 1 Service Countdown	nnnnnn	hours	P1_CDOWN
Pump 1 Maintenance Done	Yes/No		P1_MAINT
Pump 2 Service Countdown	nnnnnn	hours	P2_CDOWN
Pump 2 Maintenance Done	Yes/No		P2_MAINT
Pump 1 Maintenance Date	mm/dd/yy hh:mm		PMP1_PM0
Pump 1 Maintenance Date	mm/dd/yy hh:mm		PMP1_PM1
Pump 1 Maintenance Date	mm/dd/yy hh:mm		PMP1_PM2
Pump 1 Maintenance Date	mm/dd/yy hh:mm		PMP1_PM3
Pump 1 Maintenance Date	mm/dd/yy hh:mm		PMP1_PM4
Pump 2 Maintenance Date	mm/dd/yy hh:mm		PMP2_PM0
Pump 2 Maintenance Date	mm/dd/yy hh:mm		PMP2_PM1
Pump 2 Maintenance Date	mm/dd/yy hh:mm		PMP2_PM2
Pump 2 Maintenance Date	mm/dd/yy hh:mm		PMP2_PM3
Pump 2 Maintenance Date	mm/dd/yy hh:mm		PMP2_PM4

CCN MAINTENANCE TABLES — PM-STRN

DESCRIPTION	VALUE	UNITS	POINT NAME
Strainer Srvc Interval	nnnnnn	hours	SI_STRNR
Strainer Srvc Countdown	nnnnnn	hours	ST_CDOWN
Strainer Maint. Done	Yes/No		ST_MAINT
Strainer Maint. Date	mm/dd/yy hh:mm		STRN_PM0
Strainer Maint. Date	mm/dd/yy hh:mm		STRN_PM1
Strainer Maint. Date	mm/dd/yy hh:mm		STRN_PM2
Strainer Maint. Date	mm/dd/yy hh:mm		STRN_PM3
Strainer Maint. Date	mm/dd/yy hh:mm		STRN_PM4

CCN MAINTENANCE TABLES — PM-COIL

DESCRIPTION	VALUE	UNITS	POINT NAME
Coil Cleaning Srvc Inter	nnnnnn	hours	SI_COIL
Coil Service Countdown	nnnnnn	hours	CL_CDOWN
Coil Cleaning Maint.Done	Yes/No		CL_MAINT
Coil Cleaning Maint.Date	mm/dd/yy hh:mm		COIL_PM0
Coil Cleaning Maint.Date	mm/dd/yy hh:mm		COIL_PM1
Coil Cleaning Maint.Date	mm/dd/yy hh:mm		COIL_PM2
Coil Cleaning Maint.Date	mm/dd/yy hh:mm		COIL_PM3
Coil Cleaning Maint.Date	mm/dd/yy hh:mm		COIL_PM4

CCN MAINTENANCE TABLES — TESTMODE

DESCRIPTION	VALUE	UNITS	POINT NAME
Service Test Mode	On/Off		NET_CTRL
Compressor A1 Relay	On/Off		S_A1_RLY
Compressor A2 Relay	On/Off		S_A2_RLY
Compressor A3 Relay	On/Off		S_A3_RLY
Compressor A4 Relay	On/Off		S_A4_RLY
Compressor B1 Relay	On/Off		S_B1_RLY
Compressor B2 Relay	On/Off		S_B2_RLY
Compressor B3 Relay	On/Off		S_B3_RLY
Compressor B4 Relay	On/Off		S_B4_RLY
Fan 1 Relay	On/Off		S_FAN_1
Fan 2 Relay	On/Off		S_FAN_2
Fan 3 Relay	On/Off		S_FAN_3
Fan 4 Relay	On/Off		S_FAN_4
Fan 5 Relay	On/Off		S_FAN_5
Fan 6 Relay	On/Off		S_FAN_6
Fan 7 Relay	On/Off		S_FAN_7
Fan 8 Relay	On/Off		S_FAN_8
Cooler Pump Relay 1	On/Off		S_CLPMP1
Cooler Pump Relay 2	On/Off		S_CLPMP2
Comp A1 Unload Time	nn	sec	S_A1ULTM
Minimum Load Valve Relay	On/Off		S_MLV
Remote Alarm Relay	On/Off		S_ALM
EXV % Open	nn	%	S_EXV_A
EXV % Open	nn	%	S_EXV_B

CCN MAINTENANCE TABLES — RUNTEST

DESCRIPTION	VALUE	UNITS	POINT NAME
Percent Total Capacity	nnn	%	CAPA_T
Percent Available Cap.	nnn	%	CAPA_A
Discharge Pressure	nnn.n	psig	DP_A
Suction Pressure	nnn.n	psig	SP_A
Head Setpoint	nnn.n	°F	HSP
Saturated Condensing Tmp	nnn.n	°F	TMP_SCTA
Saturated Suction Temp	nnn.n	°F	TMP_SSTA
Compr Return Gas Temp	nnn.n	°F	TMP_RGTA
Discharge Gas Temp	nnn.n	°F	DISGAS
Suction Superheat Temp	nnn.n	^F	SH_A
Compressor A1 Relay	On/Off		K_A1_RLY
Compressor A2 Relay	On/Off		K_A2_RLY
Compressor A3 Relay	On/Off		K_A3_RLY
Minimum Load Valve Relay	On/Off		MLV_RLY
Compressor A1 Feedback	On/Off		K_A1_FBK
Compressor A2 Feedback	On/Off		K_A2_FBK
Compressor A3 Feedback	On/Off		K_A3_FBK
Percent Total Capacity	nnn	%	CAPB_T
Percent Available Cap.	nnn	%	CAPB_A
Discharge Pressure	nnn.n	psig	DP_B
Suction Pressure	nnn.n	psig	SP_B
Head Setpoint	nnn.n	°F	HSP
Saturated Condensing Tmp	nnn.n	°F	TMP_SCTB
Saturated Suction Temp	nnn.n	°F	TMP_SSTB
Compr Return Gas Temp	nnn.n	°F	TMP_RGTB
Suction Superheat Temp	nnn.n	^F	SH_B
Compressor B1 Relay	On/Off		K_B1_RLY
Compressor B2 Relay	On/Off		K_B2_RLY
Compressor B3 Relay	On/Off		K_B3_RLY

CCN MAINTENANCE TABLES — RUNTEST (cont)

DESCRIPTION	VALUE	UNITS	POINT NAME
Minimum Load Valve Relay	On/Off		MLV_RLY
Compressor B1 Feedback	On/Off		K_B1_FBK
Compressor B2 Feedback	On/Off		K_B2_FBK
Compressor B3 Feedback	On/Off		K_B3_FBK
Fan 1 Relay	On/Off		FAN_1
Fan 2 Relay	On/Off		FAN_2
Fan 3 Relay	On/Off		FAN_3
Fan 4 Relay	On/Off		FAN_4
Fan 5 Relay	On/Off		FAN_5
Fan 6 Relay	On/Off		FAN_6
Fan 7 Relay	On/Off		FAN_7
Fan 8 Relay	On/Off		FAN_8
Outside Air Temperature	nnn.n	°F	OAT
Space Temperature	nnn.n	°F	SPT
Cooler Pump Relay 1	On/Off		COOLPMP1
Cooler Pump Relay 2	On/Off		COOLPMP2
Cooler Pump 1 Interlock	Open/Closed		PMP1_FBK
Cooler Pump 2 Interlock	Open/Closed		PMP2_FBK
Cooler Entering Fluid	nnn.n	°F	COOL_EWT
Cooler Leaving Fluid	nnn.n	°F	COOL_LWT
Compressor A1 Size	nnn	tons	SIZE_A1
Compressor A2 Size	nnn	tons	SIZE_A2
Compressor A3 Size	nnn	tons	SIZE_A3
Compressor B1 Size	nnn	tons	SIZE_B1
Compressor B2 Size	nnn	tons	SIZE_B2
Compressor B3 Size	nnn	tons	SIZE_B3
Cooler Flow Switch	On/Off		COOLFLOW

CCN MAINTENANCE TABLES — DUALCHIL

DESCRIPTION	VALUE	UNITS	POINT NAME
Dual Chiller Link Good?	Yes/No		DC_LINK
Master Chiller Role	Stand Alone, Lead Chiller, Lag Chiller		MC_ROLE
Slave Chiller Role	Stand Alone, Lead Chiller, Lag Chiller		SC_ROLE
Lead Chiller Ctrl Point	snnn.n	°F	LEAD_CP
Lag Chiller Ctrl Point	snnn.n	°F	LAG_CP
Control Point	snnn.n	°F	CTRL_PNT
Cool EnteringFluid-Slave	snnn.n	°F	COOLEWTS
Cool Leaving Fluid-Slave	snnn.n	°F	COOLLWTS
Cooler Entering Fluid	snnn.n	°F	COOL_EWT
Cooler Leaving Fluid	snnn.n	°F	COOL_LWT
Lead/Lag Leaving Fluid	snnn.n	°F	DUAL_LWT
Percent Avail.Capacity	0-100	%	CAP_A
Percent Avail.Cap.Slave	0-100	%	CAP_A_S
Lag Start Delay Time	hh:mm		LAGDELAY
Load/Unload Factor	snnn.n		SMZ
Load/Unload Factor-Slave	snnn.n		SMZSLAVE
Lead SMZ Clear Commanded	Yes/No		LEADSMZC
Lag SMZ Clear Commanded	Yes/No		LAG_SMZC
Lag Commanded Off?	Yes/No		LAG_OFF
Dual Chill Lead CapLimit	0-100	%	DCLDCAPL
Dual Chill Lag CapLimit	0-100	%	DCLGCAPL

APPENDIX C — FACTORY SETTINGS FOR PUMP AND MANUAL STARTERS

30RAP UNIT SIZE	PUMP SIZE	PUMP OPTION*	UNIT VOLTAGE	OVERLOAD SETTING
010-060	1.5 HP	2, 9	208/230-60	4.6
			380-60	2.6
			460-60	2.2
			575-60	1.7
	3 HP	3, 4, B, C	208/230-60	9.1
			380-60	5.2
			460-60	4.3
			575-60	3.3
	5 HP	5, 6, D, F	208/230-60	14.5
			380-60	8.1
			460-60	6.7
			575-60	5.3
	7.5 HP	7, G	208/230-60	21.3
			380-60	12.0
			460-60	10.0
			575-60	8.1
	10 HP	Z, H	208/230-60	28.8
			380-60	16.1
			460-60	13.2
			575-60	10.6
070-150	3 HP	1, C	208/230-60	9.1
			380-60	5.2
			460-60	4.3
			575-60	3.3
		6, J	208/230-60	10.5
			380-60	5.9
			460-60	4.8
			575-60	3.8
	5 HP	2,D (070-130)	208/230-60	14.5
			380-60	8.1
			460-60	6.7
			575-60	5.3
		2,D (150-ton only)	208/230-60	17.7
			380-60	9.3
			460-60	8.2
			575-60	6.2
		7,K	208/230-60	14.5
			380-60	8.1
			460-60	6.7
			575-60	5.3
	7.5 HP	3,F (070-130)	208/230-60	21.3
			380-60	12.0
			460-60	10.0
			575-60	8.1
		3,F (150-ton only)	208/230-60	25.3
			380-60	14.1
			460-60	11.6
			575-60	9.3
		8,L	208/230-60	21.3
			380-60	12.0
			460-60	10.0
			575-60	8.1
	10 HP	4,9,G,M	208/230-60	28.8
			380-60	16.1
			460-60	13.2
			575-60	10.6
	15 HP	5,B,H,N	208/230-60	42.2
			380-60	24.2
			460-60	19.6
			575-60	16.1

*Identified by 12th digit in unit model number.

APPENDIX D — BACNET COMMUNICATION OPTION

The following section is used to configure the UPC Open controller which is used when the BACnet* communication option is selected. The UPC Open controller is mounted in the main control box per unit components arrangement diagrams.

TO ADDRESS THE UPC OPEN CONTROLLER — The user must give the UPC Open controller an address that is unique on the BACnet network. Perform the following procedure to assign an address:

1. If the UPC Open controller is powered, pull the screw terminal connector from the controller's power terminals labeled Gnd and HOT. The controller reads the address each time power is applied to it.
2. Using the rotary switches (see Fig. A and B), set the controller's address. Set the Tens (10's) switch to the tens digit of the address, and set the Ones (1's) switch to the ones digit.

As an example in Fig. B, if the controller's address is 25, point the arrow on the Tens (10's) switch to 2 and the arrow on the Ones (1's) switch to 5.

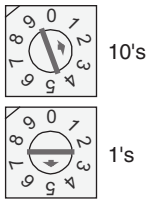

Fig. B — Address Rotary Switches

BACNET DEVICE INSTANCE ADDRESS — The UPC Open controller also has a BACnet Device Instance address. This Device Instance MUST be unique for the complete BACnet system in which the UPC Open controller is installed. The Device Instance is auto generated by default and is derived by adding the MAC address to the end of the Network Number. The Network Number of a new UPC Open controller is 16101, but it can be changed using i-Vu® Tools or BACView device. By default, a MAC address of 20 will result in a Device Instance of 16101 + 20 which would be a Device Instance of 1610120.

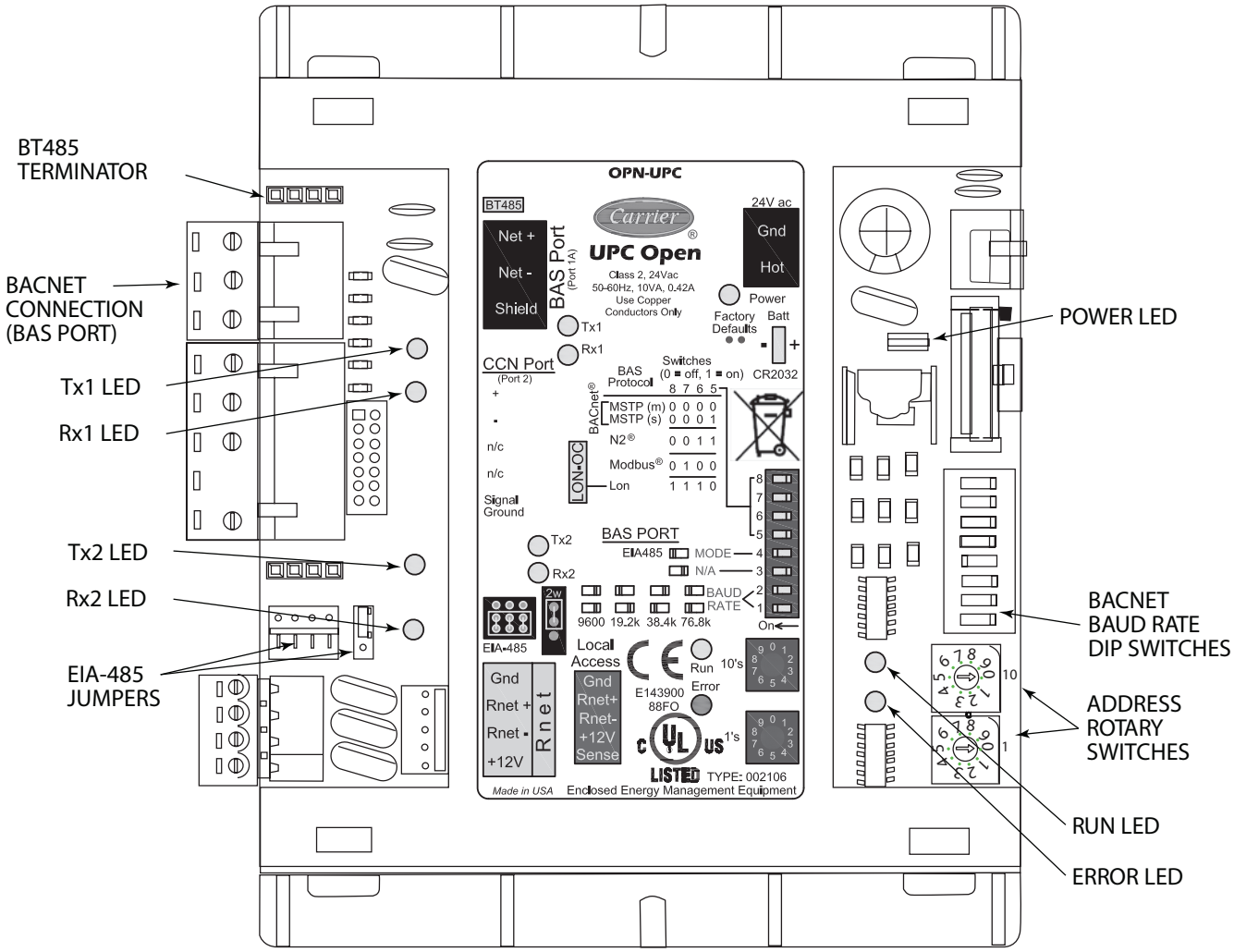

Fig. A — UPC Open Controller

* BACnet is a registered trademark of ASHRAE (American Society of Heating, Refrigerating, and Air-Conditioning Engineers).

CONFIGURING THE BAS PORT FOR BACNET MS/TP — Use the same baud rate and communication settings for all controllers on the network segment. The UPC Open controller is fixed at 8 data bits, No Parity, and 1 Stop bit for this protocol's communications.

If the UPC Open controller has been wired for power, pull the screw terminal connector from the controller's power terminals labeled Gnd and HOT. The controller reads the DIP Switches and jumpers each time power is applied to it.

Set the BAS Port DIP switch DS3 to "enable." Set the BAS Port DIP switch DS4 to "E1-485." Set the BMS Protocol DIP switches DS8 through DS5 to "MSTP." See Table A.

Table A — SW3 Protocol Switch Settings for MS/TP

DS8	DS7	DS6	DS5	DS4	DS3
Off	Off	Off	Off	On	Off

Verify that the EIA-485 jumpers below the CCN Port are set to EIA-485 and 2W.

The example in Fig. C shows the BAS Port DIP Switches set for 76.8k (Carrier default) and MS/TP.

Set the BAS Port DIP Switches DS2 and DS1 for the appropriate communications speed of the MS/TP network (9600, 19.2k, 38.4k, or 76.8k bps). See Fig. C and Table B.

Table B — Baud Selection Table

BAUD RATE	DS2	DS1
9,600	Off	Off
19,200	On	Off
38,400	Off	On
76,800	On	On

WIRING THE UPC OPEN CONTROLLER TO THE MS/TP NETWORK — The UPC Open controller communicates using BACnet on an MS/TP network segment communications at 9600 bps, 19.2 kbps, 38.4 kbps, or 76.8 kbps.

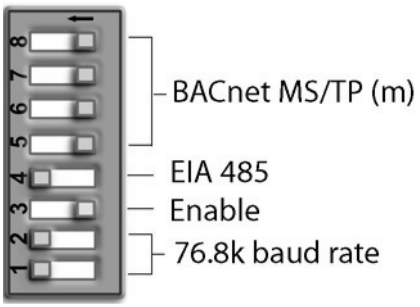

Fig. C — DIP Switches

Wire the controllers on an MS/TP network segment in a daisy-chain configuration. Wire specifications for the cable are 22 AWG (American Wire Gage) or 24 AWG, low-capacitance, twisted, stranded, shielded copper wire. The maximum length is 2000 ft.

Install a BT485 terminator on the first and last controller on a network segment to add bias and prevent signal distortions due to echoing. See Fig. A, D, and E.

To wire the UPC Open controller to the BAS network:

1. Pull the screw terminal connector from the controller's BAS Port.
2. Check the communications wiring for shorts and grounds.
3. Connect the communications wiring to the BAS port's screw terminals labeled Net +, Net -, and Shield.

NOTE: Use the same polarity throughout the network segment.

4. Insert the power screw terminal connector into the UPC Open controller's power terminals if they are not currently connected.
5. Verify communication with the network by viewing a module status report. To perform a module status report using the BACview keypad/display unit, press and hold the "FN" key then press the "." key.

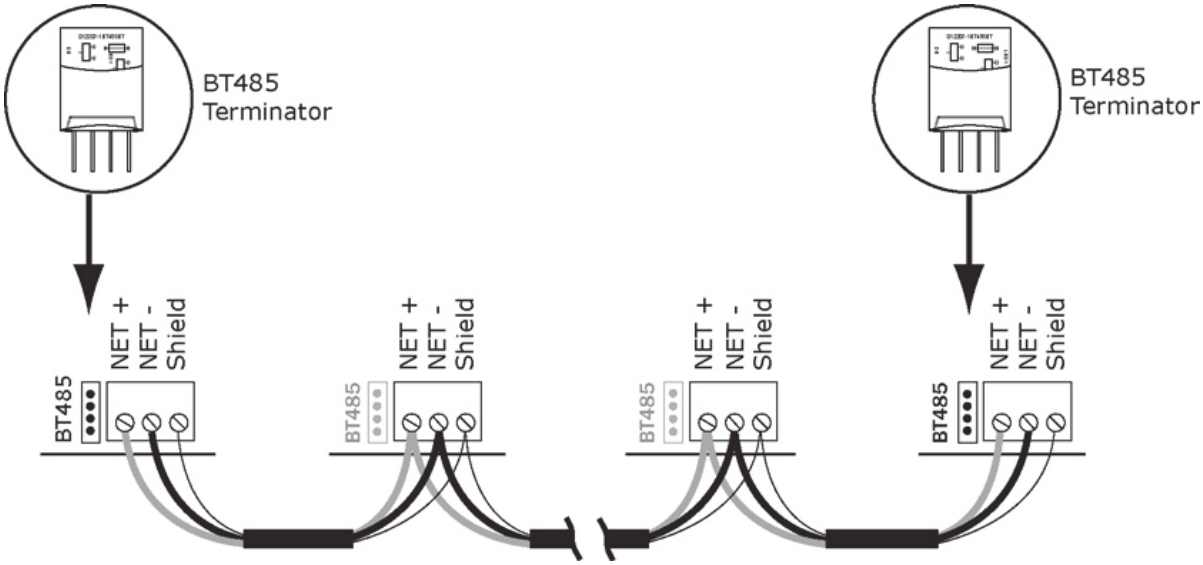

Fig. D — Network Wiring

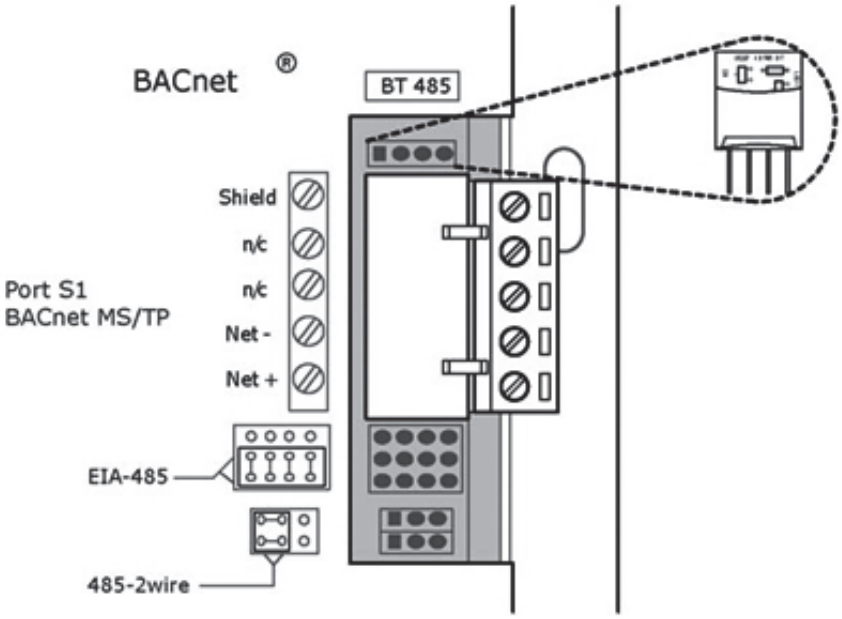

Fig. E — BT485 Terminator Installation

To install a BT485 terminator, push the BT485 terminator on to the BT485 connector located near the BACnet connector.

NOTE: The BT485 terminator has no polarity associated with it.

To order a BT485 terminator, consult Commercial Products i-Vu® Open Control System Master Prices.

MS/TP WIRING RECOMMENDATIONS — Recommendations are shown in Tables C and D. The wire jacket and UL temperature rating specifications list two acceptable alternatives. The Halar* specification has a higher temperature rating and a tougher outer jacket than the SmokeGard† specification, and it is appropriate for use in applications where the user is concerned about abrasion. The Halar jacket is also less likely to crack in extremely low temperatures.

NOTE: Use the specified type of wire and cable for maximum signal integrity.

Table C — MS/TP Wiring Recommendations

SPECIFICATION	RECOMMENDATION
CABLE	Single twisted pair, low capacitance, CL2P, 22 AWG (7x30), TC foam FEP, plenum rated cable
CONDUCTOR	22 or 24 AWG stranded copper (tin plated)
INSULATION	Foamed FEP 0.015 in. (0.381 mm) wall 0.060 in. (1.524 mm) O.D.
COLOR CODE	Black/White
TWIST LAY	2 in. (50.8 mm) lay on pair 6 twists/foot (20 twists/meter) nominal
SHIELDING	Aluminum/Mylar shield with 24 AWG TC drain wire
JACKET	SmokeGard Jacket (SmokeGard PVC) 0.021 in. (0.5334 mm) wall 0.175 in. (4.445 mm) O.D. Halar Jacket (E-CTFE) 0.010 in. (0.254 mm) wall 0.144 in. (3.6576 mm) O.D.
DC RESISTANCE	15.2 Ohms/1000 feet (50 Ohms/km) nominal
CAPACITANCE	12.5 pF/ft (41 pF/meter) nominal conductor to conductor
CHARACTERISTIC IMPEDANCE	100 Ohms nominal
WEIGHT	12 lb/1000 feet (17.9 kg/km)
UL TEMPERATURE RATING	SmokeGard 167°F (75°C) Halar -40 to 302°F (-40 to 150°C)
VOLTAGE	300 Vac, power limited
LISTING	UL: NEC CL2P, or better

LEGEND

AWG — American Wire Gage
CL2P — Class 2 Plenum Cable
DC — Direct Current
FEP — Fluorinated Ethylene Polymer
NEC — National Electrical Code
O.D. — Outside Diameter
TC — Tinned Copper
UL — Underwriters Laboratories

*Registered trademark of Solvay Plastics.
†Trademark of AlphaGary-Mexichem Corp.

Table D — Open System Wiring Specifications and Recommended Vendors

WIRING SPECIFICATIONS		RECOMMENDED VENDORS AND PART NUMBERS			
WIRE TYPE	DESCRIPTION	CONNECT AIR INTERNATIONAL	BELDEN	RMCORP	CONTRACTORS WIRE AND CABLE
MS/TP NETWORK (RS-485)	22 AWG, single twisted shielded pair, low capacitance, CL2P, TC foam FEP, plenum rated. See MS/TP Installation Guide for specifications.	W221P-22227	—	25160PV	CLP0520LC
	24 AWG, single twisted shielded pair, low capacitance, CL2P, TC foam FEP, plenum rated. See MS/TP Installation Guide for specifications.	W241P-2000F	82841	25120-OR	—
RNET	4 conductor, unshielded, CMP, 18 AWG, plenum rated.	W184C-2099BLB	6302UE	21450	CLP0442

LEGEND

AWG — American Wire Gage
CL2P — Class 2 Plenum Cable
CMP — Communications Plenum Rated
FEP — Fluorinated Ethylene Polymer
TC — Tinned Copper

LOCAL ACCESS TO UPC OPEN CONTROLLER — The user can use a BACview6 handheld keypad display unit or the Virtual BACview software as a local user interface to an Open controller. These items let the user access the controller network information. These are accessory items and do not come with the UPC Open controller.

The BACview6 unit connects to the local access port on the UPC Open controller. See Fig. F. The BACview software must be running on a laptop computer that is connected to the local access port on the UPC Open controller. The laptop will require an additional USB link cable for connection.

See the *BACview Installation and User Guide* for instructions on connecting and using the BACview6 device.

To order a BACview6 Handheld (BV6H), consult Commercial Products i-Vu Open Control System Master Prices.

CONFIGURING THE UPC OPEN CONTROLLER'S PROPERTIES — The UPC Open device and *Comfort*Link controller must be set to the same CCN Address (Element) number and CCN Bus number. The factory default settings for CCN Element and CCN Bus number are 1 and 0 respectively.

If modifications to the default Element and Bus number are required, both the *Comfort*Link and UPC Open configurations must be changed.

The following configurations are used to set the CCN Address and Bus number in the *Comfort*Link controller. These configurations can be changed using the scrolling marquee display or accessory Navigator handheld device.

Configuration→CCN→CCN.A (CCN Address)

Configuration→CCN→CCN.B (CCN Bus Number)

The following configurations are used to set the CCN Address and Bus Number in the UPC Open controller. These configurations can be changed using the accessory BACview6 display.

Navigation: BACview→CCN
Home: Element Comm Stat
Element: 1
Bus: 0

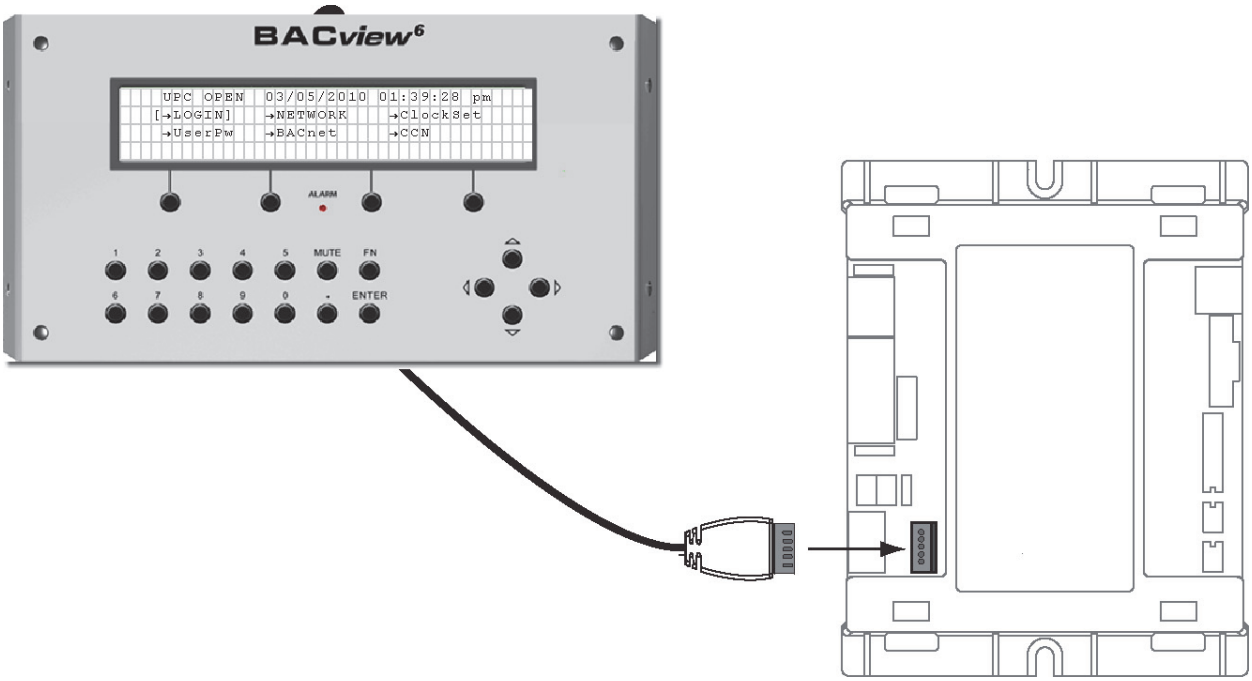

Fig. F — BACview6 Device Connection

If the UPC Open is used with the chiller application of Lead/Lag/Standby, all chillers and UPC Open's CCN element numbers must be changed to a unique number in order to follow CCN specifications. In this application, there can only be a maximum of 3 UPC Open controllers on a CCN bus.

For the CCN Alarm Acknowledger configuration, the UPC Open defaults to CCN Acknowledger. If a Chiller Lead/Lag/Standby application is being used, then the Carrier technician must change the configuration to only one CCN Acknowledger on the CCN bus.

For the CCN Time Broadcaster configuration, the UPC Open defaults to CCN Time Broadcaster. If the Chiller Lead/Lag/Standby application is used, then the Carrier technician must change the configuration to only one CCN Time Broadcaster on the CCN bus.

TROUBLESHOOTING — If there are problems wiring or addressing the UPC Open controller, contact Carrier Technical Support.

COMMUNICATION LEDS — The LEDs indicate if the controller is communicating with the devices on the network. See Tables E and F. The LEDs should reflect communication traffic based on the baud rate set. The higher the baud rate the more solid the LEDs become. See Fig. A for location of LEDs on the UPC Open module.

REPLACING THE UPC OPEN BATTERY — The UPC Open controller's 10-year lithium CR2032 battery provides a minimum of 10,000 hours of data retention during power outages.

IMPORTANT: Power must be **ON** to the UPC Open when replacing the battery, or the date, time, and trend data will be lost.

Remove the battery from the controller, making note of the battery's polarity. Insert the new battery, matching the battery's polarity with the polarity indicated on the UPC Open controller.

NETWORK POINTS LIST — The points list for the controller is shown in Table G.

Refer to Appendix B for additional information on CCN point name.

Table E — LED Status Indicators

LED	STATUS
POWER	Lights when power is being supplied to the controller. The UPC Open controller is protected by internal solid-state polyswitches on the incoming power and network connections. These polyswitches are not replaceable and will reset themselves if the condition that caused the fault returns to normal.
RX	Lights when the controller receives data from the network segment; there is an Rx LED for Ports 1 and 2.
TX	Lights when the controller transmits data to the network segment; there is a Tx LED for Ports 1 and 2.
RUN	Lights based on controller status. See Table F.
ERROR	Lights based on controller status. See Table F.

Table F — Run and Error LEDs Controller and Network Status Indication

RUN LED	ERROR LED	STATUS
2 flashes per second	Off	Normal
2 flashes per second	2 flashes, alternating with **Run** LED	Five minute auto-restart delay after system error
2 flashes per second	3 flashes, then off	Controller has just been formatted
2 flashes per second	1 flash per second	Controller is alone on the network
2 flashes per second	On	Exec halted after frequent system errors or control programs halted
5 flashes per second	On	Exec start-up aborted, Boot is running
5 flashes per second	Off	Firmware transfer in progress, Boot is running
7 flashes per second	7 flashes per second, alternating with **Run** LED	Ten second recovery period after brownout
14 flashes per second	14 flashes per second, alternating with **Run** LED	Brownout

Table G — Network Points List

POINT DESCRIPTION	CCN POINT NAME	READ/ WRITE	UNITS	DEFAULT VALUE	RANGE	BACNET OBJECT ID	BACNET OBJECT NAME
4-20 mA Demand Signal	LMT_MA	R	mA			AV:36	lmt_ma_1
4-20 mA Reset Signal	RST_MA	R	°F			AV:33	rst_ma_1
Active Demand Limit	DEM_LIM	R/W	%	100	0 - 100	AV:2	dem_lim_1
Active Setpoint	SP	R	°F			AV:4	sp_1
Alarm State	ALM	R			1 = Normal 2 = Alert 3 = Alarm	MSV:1	alm_msv_1
Available Cap Nominal Tons	CALCTONS	R	TONS		0 - 200	AV:84	calctons_1
CCN Chiller	CHIL_S_S	R/W		Start	Start/Stop	BV:4	chil_s_s_1
Circuit A Run Hours	HR_CIRA	R	hr			AV:59	hr_cira_1
Circuit A Starts	CY_CIRA	R				AV:67	cy_cira_1
Circuit B Run Hours	HR_CIRB	R	hr			AV:63	hr_cirb_1
Circuit B Starts	CY_CIRB	R				AV:71	cy_cirb_1
Coil Cleaning Maint.Done	CL_MAINT	R/W		No	Yes/No	BV:54	cl_maint_1
Coil Cleaning Srvc Inter	SI_COIL	R/W	hr	8760	0 - 65535	AV:50	si_coil_1
Coil Service Countdown	CL_CDOWN	R	hr			AV:49	cl_cdown_1
Comp A1 Unload Time	A1UNLTME	R				AV:78	a1unltme_1
Compr Return Gas Temp	TMP_RGTA	R	°F			AV:20	tmp_rgta_1
Compr Return Gas Temp	TMP_RGTB	R	°F			AV:28	tmp_rgtb_1
Compressor A1 Feedback	K_A1_FBK	R				BV:16	k_a1_fbk_1
Compressor A1 Relay	K_A1_RLY	R				BV:13	k_a1_rly_1
Compressor A1 Run Hours	HR_A1	R	hr			AV:60	hr_a1_1
Compressor A1 Starts	CY_A1	R				AV:68	cy_a1_1
Compressor A2 Feedback	K_A2_FBK	R				BV:17	k_a2_fbk_1
Compressor A2 Relay	K_A2_RLY	R				BV:14	k_a2_rly_1
Compressor A2 Run Hours	HR_A2	R	hr			AV:61	hr_a2_1
Compressor A2 Starts	CY_A2	R				AV:69	cy_a2_1
Compressor A3 Feedback	K_A3_FBK	R			On/Off	BV:18	k_a3_fbk_1
Compressor A3 Relay	K_A3_RLY	R			On/Off	BV:15	k_a3_rly_1
Compressor A3 Run Hours	HR_A3	R	hr		0-9999	AV:62	hr_a3_1
Compressor A3 Starts	CY_A3	R			0-9999	AV:70	cy_a3_1
Compressor B1 Feedback	K_B1_FBK	R				BV:22	k_b1_fbk_1
Compressor B1 Relay	K_B1_RLY	R				BV:19	k_b1_rly_1
Compressor B1 Run Hours	HR_B1	R	hr			AV:64	hr_b1_1
Compressor B1 Starts	CY_B1	R				AV:72	cy_b1_1
Compressor B2 Feedback	K_B2_FBK	R				BV:23	k_b2_fbk_1
Compressor B2 Relay	K_B2_RLY	R				BV:20	k_b2_rly_1
Compressor B2 Run Hours	HR_B2	R	hr			AV:65	hr_b2_1
Compressor B2 Starts	CY_B2	R				AV:73	cy_b2_1
Compressor B3 Feedback	K_B3_FBK	R			On/Off	BV:24	k_b3_fbk_1
Compressor B3 Relay	K_B3_RLY	R			On/Off	BV:21	k_b3_rly_1
Compressor B3 Run Hours	HR_B3	R	hr		0-9999	AV:66	hr_b3_1
Compressor B3 Starts	CY_B3	R			0-9999	AV:74	cy_b3_1
Control Method	CONTROL	R			1 = Switch 3 = Occupancy 4 = CCN	MSV:5	control_msv_1

LEGEND

R — Read
W — Write

Table G — Network Points List (cont)

POINT DESCRIPTION	CCN POINT NAME	READ/ WRITE	UNITS	DEFAULT VALUE	RANGE	BACNET OBJECT ID	BACNET OBJECT NAME
Control Mode	STAT	R			1 = Test 2 = Local Off 3 = CCN Off 4 = Clock Off 5 = Emergency Stop 6 = Local On 7 = CCN On 8 = Clock On 9 = Heat Enabled 10 = Pump Delay	AV:8	stat_1
Control Point	CTRL_PNT	R/W	°F	44.0	-20 - 70	AV:5	ctrl_pnt_1
Cooler Entering Fluid	COOL_EWT	R	°F			AV:30	cool_ewt_1
Cooler Flow Switch	COOLFLOW	R				BV:11	coolflow_1
Cooler Freeze Protection	MODE_16	R				BV:42	mode_16_1
Cooler Leaving Fluid	COOL_LWT	R	°F			AV:31	cool_lwt_1
Cooler LWT Setpoint	LWT_SP	R	°F			AV:38	lwt_sp_1
Cooler Pump 1 Interlock	PMP1_FBK	R				BV:9	pmp1_fbk_1
Cooler Pump 2 Interlock	PMP2_FBK	R				BV:10	pmp2_fbk_1
Cooler Pump Relay 1	COOLPMP1	R				BV:7	coolpmp1_1
Cooler Pump Relay 2	COOLPMP2	R				BV:8	coolpmp2_1
Cooler Pump Select	PMP_SLCT	R/W				AV:40	pmp_slct_1
Cooler Pump Shutdown Dly	PUMP_DLY	R/W	min	1	0 - 10	AV:41	pump_dly_1
Cooler/Pump Heater	COOL_HTR	R				BV:59	cool_htr_1
Cooling Ramp Loading	CRAMP	R/W		1.0	0.2 - 2.0	AV:56	cramp_1
Cooling Reset Type	CRST_TYP	R			1 = No Reset 2 = 4-20mA Input 3 = External Temp-OAT 4 = Return Fluid 5 = External Temp-SPT	MSV:7	crst_typ1_msv_1
Cooling Setpoint 1	CSP1	R/W	°F	44.0	-20 - 70	AV:53	csp1_1
Cooling Setpoint 2	CSP2	R/W	°F	44.0	-20 - 70	AV:54	csp2_1
CSM Controlling Chiller	MODE_1	R				BV:30	mode_1_1
Demand Level 1		R/W	%			AV:80	dmv_lvl_1_perct_1
Demand Level 2		R/W	%			AV:81	dmv_lvl_2_perct_1
Demand Level 3		R/W	%			AV:82	dmv_lvl_3_perct_1
Demand Limit Select	DMD_CTRL	R			1 = None 2 = External Sw. Input 3 = 4-20mA Input 4 = Loadshed	MSV:8	dmd_ctrl_msv_1
Demand Limit Switch 1	DMD_SW1	R				BV:25	dmd_sw1_1
Demand Limit Switch 2	DMD_SW2	R				BV:26	dmd_sw2_1
Demand/Sound Limited	MODE_15	R				BV:41	mode_15_1
Discharge Gas Temp	DISGAS	R	°F			AV:15	disgas_1
Discharge Pressure	DP_A	R	psig			AV:13	dp_a_1
Discharge Pressure	DP_B	R	psig			AV:23	dp_b_1
Dual Setpoint	MODE_13	R				BV:39	mode_13_1
Dual Setpoint Switch	DUAL_IN	R				BV:29	dual_in_1
Element Comm Status		R				BV:2999	element_stat_1
Emergency Stop	EMSTOP	R/W		Enabled	Enabled/Emstop	BV:6	emstop_1
Entering Fluid Temp	EWT	R	°F			AV:6	ewt_1
EXV% Open	EXV_A	R	%			AV:18	exv_a_1
EXV% Open	EXV_B	R	%			AV:27	exv_b_1

LEGEND

R — Read
W — Write

Table G — Network Points List (cont)

POINT DESCRIPTION	POINT NAME	READ/ WRITE	UNITS	DEFAULT VALUE	RANGE	BACNET OBJECT ID	BACNET OBJECT NAME
Fan Relay 1	FAN_1	R				BV:60	fan_1_1
Fan Relay 2	FAN_2	R				BV:61	fan_2_1
Fan Relay 3	FAN_3	R				BV:62	fan_3_1
Fan Relay 4	FAN_4	R				BV:63	fan_4_1
Fan Relay 5	FAN_5	R				BV:64	fan_5_1
Fan Relay 6	FAN_6	R				BV:65	fan_6_1
Fan Relay 7	FAN_7	R				BV:66	fan_7_1
Fan Relay 8	FAN_8	R				BV:67	fan_8_1
Head Setpoint	HSP	R	°F			AV:29	hsp_1
Heat Request	HEAT_REQ	R				BV:28	heat_req_1
High SCT Circuit A	MODE_21	R				BV:47	mode_21_1
High SCT Circuit B	MODE_22	R				BV:48	mode_22_1
High Temperature Cooling	MODE_18	R				BV:44	mode_18_1
Ice Done	ICE_DONE	R				BV:27	ice_done_1
Ice Setpoint	CSP3	R/W	°F	32.0	-20 - 32	AV:55	csp3_1
Lead Pump	LEADPUMP	R			1 = Automatic 2 = Pump 1 3 = Pump 2 4 = No Configuration	MSV:9	leadpump_msv_1
Lead/Lag Circuit Select	LEAD_TYP	R		1	1 = Automatic 2 = Circuit A Leads 3 = Circuit B Leads	AV:43	lead_typ_1
Lead/Lag Leaving Fluid	DUAL_LWT	R	°F			AV:32	dual_lwt_1
Leaving Fluid Temp - Prime Variable	LWT	R	°F			AV:7	lwt_1
Loading Sequence Select	SEQ_TYPE	R				AV:77	seq_type_1
Low Cooler Suction Temp A	MODE_7	R				BV:35	mode_7_1
Low Cooler Suction Temp B	MODE_8	R				BV:36	mode_8_1
Low Sound Active	LSACTIVE	R				BV:2	lsactive_1
Low Sound Mode	MODE_25	R				BV:51	mode_25_1
Low Temperature Cooling	MODE_17	R				BV:43	mode_17_1
Machine Operating Hours	HR_MACH	R	hr			AV:57	hr_mach_1
Machine Starts	CY_MACH	R				AV:58	cy_mach_1
Making ICE	MODE_19	R				BV:45	mode_19_1
Master/Slave Control	MODE_3	R				BV:32	mode_3_1
Minimum Comp. On Time	MODE_23	R				BV:49	mode_23_1
Minimum Load Valve Relay	MLV_RLY	R				BV:79	mlv_rly_1
Minimum OFF Time Active	MODE_10	R				BV:38	mode_10_1
Minutes Off Time	DELAY	R/W	min	0	0 - 15	AV:42	delay_1
Minutes Left for Start	MIN_LEFT	R	min		00:00-15:00	AV:34	min_left_1
Occupancy Status	OCC	R				BV:2008	occ_status
Outdoor Air Temperature	OAT	R/W	°F			AV:1003	oat_1
Override Modes in Effect	MODE	R				BV:5	mode_1
Percent Available Cap.	CAPA_A	R	%			AV:12	capa_a_1
Percent Available Cap.	CAPB_A	R	%			AV:22	capb_a_1
Percent Total Capacity	CAP_T	R	%			AV:3	cap_t_1
Percent Total Capacity	CAPA_T	R	%			AV:11	capa_t_1
Percent Total Capacity	CAPB_T	R	%			AV:21	capb_t_1
Pump 1 Maintenance Done	P1_MAINT	R/W		No	Yes/No	BV:52	p1_maint_1
Pump 1 Run Hours	HR_PUMP1	R	hr			AV:75	hr_pump1_1
Pump 1 Service Countdown	P1_CDOWN	R	hr			AV:46	p1_cdown_1
Pump 2 Maintenance Done	P2_MAINT	R/W		No	Yes/No	BV:53	p2_maint_1
Pump 2 Run Hours	HR_PUMP2	R	hr			AV:76	hr_pump2_1
Pump 2 Service Countdown	P2_CDOWN	R	hr			AV:47	p2_cdown_1
Pump Changeover Hours	PMP_DLTA	R/W	hr	500	10 - 2000	AV:39	pmp_dlta_1
Pump Off Delay Time	MODE_24	R				BV:50	mode_24_1
Pump Service Interval	SI_PUMPS	R/W	hr	8760	0 - 65535	AV:48	si_pumps_1
Ramp Load Limited	MODE_5	R				BV:33	mode_5_1
Requested Stage	STAGE	R				AV:9	stage_1

LEGEND

R — Read
W — Write

Table G — Network Points List (cont)

POINT DESCRIPTION	POINT NAME	READ/ WRITE	UNITS	DEFAULT VALUE	RANGE	BACNET OBJECT ID	BACNET OBJECT NAME
Rotate Cooler Pumps Now	ROT_PUMP	R/W		No	No/Yes	BV:12	rot_pump_1
Saturated Condensing Tmp	TMP_SCTA	R	°F			AV:16	tmp_scta_1
Saturated Condensing Tmp	TMP_SCTB	R	°F			AV:25	tmp_sctb_1
Saturated Suction Temp	TMP_SSTA	R	°F			AV:17	tmp_ssta_1
Saturated Suction Temp	TMP_SSTB	R	°F			AV:26	tmp_sstb_1
Slow Change Override	MODE_9	R				BV:37	mode_9_1
Storing ICE	MODE_20	R				BV:46	mode_20_1
Strainer Maint. Done	ST_MAINT	R/W		No	Yes/No	BV:55	st_maint_1
Strainer Srvc Countdown	ST_CDOWN	R	hr			AV:52	st_cdown_1
Strainer Srvc Interval	SI_STRNR	R/W	hr	8760	0 - 65535	AV:51	si_strnr_1
Suction Pressure	SP_A	R	psig			AV:14	sp_a_1
Suction Pressure	SP_B	R	psig			AV:24	sp_b_1
Suction Superheat Temp	SH_A	R	°^F			AV:44	sh_a_1
Suction Superheat Temp	SH_B	R	°^F			AV:45	sh_b_1
System Cooling Demand Level		R				AV:9006	cool_demand_level_1
System Demand Limiting		R				BV:83	dem_lmt_act_1
Temperature Reset	MODE_14	R				BV:40	mode_14_1
Timed Override In Effect	MODE_6	R				BV:34	mode_6_1
User Defined Analog 1		R/W	sq m			AV:2901	user_analog_1_1
User Defined Analog 2		R/W	sq m			AV:2902	user_analog_2_1
User Defined Analog 3		R/W	sq m			AV:2903	user_analog_3_1
User Defined Analog 4		R/W	sq m			AV:2904	user_analog_4_1
User Defined Analog 5		R/W	sq m			AV:2905	user_analog_5_1
User Defined Binary 1		R/W	sq m			BV:2911	user_binary_1_1
User Defined Binary 2		R/W	sq m			BV:2912	user_binary_2_1
User Defined Binary 3		R/W	sq m			BV:2913	user_binary_3_1
User Defined Binary 4		R/W	sq m			BV:2914	user_binary_4_1
User Defined Binary 5		R/W	sq m			BV:2915	user_binary_5_1
Var Head Press Output	VHP_ACT	R	mA			AV:19	vhp_act_1
WSM Controlling Chiller	MODE_2	R				BV:31	mode_2_1

LEGEND

R — Read
W — Write

30RAP Weekly Maintenance Log

NOTE: To avoid injury to personnel and damage to equipment or property when performing maintenance listed in this maintenance log, use good judgment, follow safe practices, and adhere to the safety considerations/information as outlined in preceding sections of this Controls, Start-Up, Operation, Service, and Troubleshooting document.

Plant _____

Machine Model No. _____

DATE	OIL LEVEL	CHECK ALARMS / FAULTS	OPERATOR INITIALS	REMARKS

NOTE: Equipment failures caused by lack of adherence to the Maintenance Interval Requirements are not covered under warranty.

30RAP Monthly Maintenance Log

NOTE: To avoid injury to personnel and damage to equipment or property when performing maintenance listed in this maintenance log, use good judgment, follow safe practices, and adhere to the safety considerations/information as outlined in preceding sections of this Controls, Start-Up, Operation, Service, and Troubleshooting document.

MONTH			1	2	3	4	5	6	7	8	9	10	11	12
DATE			/ /	/ /	/ /	/ /	/ /	/ /	/ /	/ /	/ /	/ /	/ /	/ /
OPERATOR														

UNIT SECTION	ACTION	UNIT	ENTRY											
COMPRESSOR	Check Oil Level	yes/no												
	Leak Test	yes/no												
	Check Crankcase Heater If Equipped	yes/no												
COOLER	Inspect and Clean Cooler	yes/no	Every 3 - 5 Years											
	Inspect Cooler Heater	amps												
	Leak Test	yes/no												
	Record Water Pressure Differential (PSI)	PSI												
	Inspect Water Pumps	yes/no												
CONDENSER	Leak Test	yes/no												
	Inspect and Clean Condenser Coil	yes/no												
CONTROLS	General Cleaning and Tightening Connections	yes/no	Annually											
	Check Pressure Transducers	yes/no												
	Confirm Accuracy of Thermistors	yes/no												
	Check Chilled Water Flow Switch Operation	yes/no												
STARTER	General Tightening and Cleaning Connections	yes/no	Annually											
	Inspect All Contactors	yes/no												
SYSTEM	Check Refrigerant Charge	yes/no												
	Verify Operation of EXVs and Record Position	0-100%												
	Record System Superheat	deg. F												

NOTE: Equipment failures caused by lack of adherence to the Maintenance Interval Requirements are not covered under warranty.

APPENDIX E — MAINTENANCE SUMMARY AND LOG SHEETS (cont)

30RAP Seasonal Shutdown Log

MONTH		1	2	3	4	5	6	7	8	9	10	11	12
DATE		/ /	/ /	/ /	/ /	/ /	/ /	/ /	/ /	/ /	/ /	/ /	/ /
OPERATOR													

UNIT SECTION	ACTION	ENTRY											
COOLER	Isolate and Drain Cooler												
	Add Glycol for Freeze Protection												
CONTROLS	Do Not Disconnect Control Power												

NOTE: Equipment failures caused by lack of adherence to the Maintenance Interval Requirements are not covered under warranty.

INDEX

4 to 20 mA demand limiting *50*
Input *39*
Reset *47*
Accessory Navigator display module *7*
Adjusting the backlight brightness *7*
Adjusting the contrast *7*
Actual start-up *51*
Advanced scroll temperature protection *85*
Alarm and alert codes table *77-82*
Alarm control *29*
Alarm routing control *30*
Alarm equipment priority *29*
Alarm routing control *29*
Alarms and alerts *92*
Alarm system name *29*
AUX. See Auxiliary (AUX) board.
Auxiliary (AUX) board *27*
Inputs *28*
Outputs *28*
BACnet communication option *128-136*
Basic controls usage *4*
Board addresses *27*
Brazed-plate cooler heat exchanger
Cleaning *60*
Replacement *60*
Capacity control *31*
Capacity control overrides *32*
Carrier comfort network
Carrier Comfort Network (CCN) interface *29*
CCN communications bus wiring to optional space sensor RJ11 connector *30*
CCN control *38*
CCN tables *114-126*
CCN wiring diagram *27*
CCN. See Carrier Comfort Network (CCN) Interface.
Charge adjustment for brine operation *52*
Check refrigerant charge *52*
Check refrigerant feed components *61*
Check unit safeties *62*
Chilled fluid proof-of-flow switch open *76*
Chilled water flow switch *67*
Communication failure retry time *29*
Complete unit stoppage and restart *76*
Component drawings *8*
Component location figures *58, 59*
Compressor expansion board (CXB) *27*
Output relays *28*
Status inputs *28*
Compressor failure alerts *92-96*
Compressor motor sensor harness installation figure *87*
Compressor replacement *57*
Compressor return gas temperature sensor *30*
Compressor safeties *85*
Condenser coil maintenance and cleaning recommendations *75*
Condenser fan layout *35*
Condenser fans *68*
Configuring and operating dual chiller control *43*
Configuring outdoor air and space temperature reset table *47*
Configuring return temperature reset *48*
Control box *9-11*
Control box maintenance *75*
Control components *54*
Control methods and cooling set points *39*
Control module communication *27*
Controls *7-50*
Conventions used in this manual *3*
Cooler *60*
Cooler entering fluid sensor *30*
Cooler flow rates and loop volumes *52*
Cooler freeze protection *34*
Cooler freeze-up protection *62*
Cooler leaving fluid sensor *30*
Cooler pump
Control *41*
Operation *41*
Sequence of operation *41*
Cooling load satisfied *76*
Cooling set point select *39*
Copeland compressor troubleshooting *86*
CoreSense communication module
DIP switch settings *88*
DIP switch settings for Kriwan retrofit *87*
LED flash codes *89*
Motor protection wiring *88*
Motor thermistor plug *88*
Mounting *88*
Crankcase heater *51, 59, 60*
Detail under compressor *60*
CSB. See Current Sensor Board.
Current sensor board (CSB) *27*
CXB. See Compressor Expansion Board.
Deadband multiplier *32, 34*
Demand limit *49*
Configuring *50*
Digital compressor configuration *50*
Digital scroll
Operation *50*
Option *49*
Disassembly and assembly of EXV motor *57*
Discharge temperature thermistor *30*
Display tables *97-113*
Dual chiller configuration tables *44-46*
Dual leaving water temperature sensor *30*
Dual leaving water thermistor well *43*
Electronic components *54*
Electronic expansion valve *31, 54*
Cable connections to EXV module *55*
Cutaway figure *54*
Externally powered demand limit *49*
EXV board *27*
Replacement *55*
Steps *54*
Troubleshooting Procedure *54*
Valve motor replacement *56*
Emergency on/off switch *27*
EMM. See Energy Management Module (EMM).
Enable/off/remote contact switch *27*
Energy management module (EMM) *27, 31*
EXV. See Electronic Expansion Valve.
Fan drive operation *37*
Fan stages *36*
Fault codes *71*
Field servicing instructions *55*
Filter drier *61*
General power failure *76*
Head pressure control *34*
Heater cable *62*
Heating operation *40*
HEVCF. See High-efficiency variable condenser fans.
High-efficiency fan drive parameters *37*
High-efficiency variable condenser fans (HEVCF)
Alarm/alert details *84*
Common alarms *83*
Fans *37*
Parameters reset at chiller power cycle *38*
High-pressure switch *62*
Factory settings *62*
Hydronic package *41, 74*
Ice mode *39*
Kriwan motor protection wiring *86*
Lead/lag determination *32*
Loading sequence select *32*
Loss-of-cooler flow protection *31*
Low-ambient operation *53*
Low saturated suction *85*
Low saturated suction protection *34*
Low sound fan *69*
Low sound mode operation *40*
Main base board (MBB) *26*
Output relays *28*
Thermistor designations *28*
Maintenance *75*
Recommended schedule *75*
Summary and log sheets *137-139*
MBB. See Main Base Board (MBB).
Microchannel heat exchanger (MCHX) condenser coil maintenance and cleaning recommendations *61*
Minimum cooler flow rates *52*
Minimum load control *34*
Minimum load valve *61*
Minutes left for start *32*
Minutes off time *32*
Moisture-liquid indicator *61*
Motormaster V controller *37, 70*
Buttons and mode display *73*
Configuration *71*
Drive programming *73*
EPM chip *73*
General operation *71*
Loss of CCN communications *73*
Program parameters for operating modes *72*
Replacing defective modules *74*
Wiring *70*
Motor overload protection *86*
Motor protection module *90*
No integral pump — dual external pump control *41*

Occupancy schedule *38*
Oil charge *60*
Open 24-V control circuit breaker(s) *76*
Operating envelope *35*
Operating limitations *52*
Operating modes *6*
Operation of machine based on control method and cooling set point selection settings *38*
Operation sequence *53*
Outdoor-air temperature reset *48*
Outdoor-air temperature sensor *30*
Part load data percent displacement, standard units with minimum load valve *33*
Pressure relief devices *61*
Pressure transducers *62, 67*
  Troubleshooting *67*
Pre-start-up *51*
Pump and manual starters, factory settings *127*
Pump performance check *75*
Re-alarm time *29*
Recommended minimum cool down time after compressor is stopped *85*
Remote space temperature sensor *30*
Replacement modules *74*
Replacing thermistors *62*
Round tube plate fin condenser coil maintenance and cleaning recommendations *61*
Safety considerations *2*
Scrolling marquee display *4*
  Menu structure *5*
Sensors *29*
  Cooler leaving fluid sensor *30*
Service *54-75*
Service Test *40*
Sight glass location *51*
Space temperature reset *48*
Space temperature sensor wiring *30*
Standard chilled fluid temperature control — no reset *49*
Start-up and operation *51-53*
Start-up checklist *CL-1*
Strainer *68*
System check *51*
Temperature limits *53*
Temperature reset *43*
Thermistor/temperature sensor check *62*
Thermistor connections to main base board *67*
Thermistor failure *76*
Thermistors *62*
Thermistor temperatures vs. resistance/voltage drop *63-66*
Thermistor well *67*
Troubleshooting *76-96*
Unit enable-off-remote contact switch is off *76*
Unit sizes *4*
Unit torque specification *59*
Voltage *53*
Winter shutdown *62*
Wiring
  Control *13, 15, 17, 19, 21, 23, 25*
  Power *12, 14, 16, 18, 20, 22, 24*

© Carrier Corporation 2016

START-UP CHECKLIST FOR 30RAP LIQUID CHILLER

(Remove and use for Job File)

NOTE: To avoid injury to personnel and damage to equipment or property when completing the procedures listed in this start-up checklist, use good judgment, follow safe practices, and adhere to the safety considerations/information as outlined in preceding sections of this Controls, Start-Up, Operation, Service, and Troubleshooting document.

I. Project Information

Job name _____ Installing contractor_____

Address _____ Sales office _____

City _____State_____ Zip _____ Start-up performed by_____

Unit

→ Model _____ Serial _____

II. Preliminary Equipment Check (To Be Performed By Installing Contractor)

IS THERE ANY PHYSICAL DAMAGE? ☐ YES ☐ NO

IF YES, WAS IT NOTED ON THE FREIGHT BILL, AND HAS A CLAIM BEEN FILED WITH THE SUPPLIER? ☐ YES ☐ NO

DESCRIPTION _____

_____

1. UNIT IS INSTALLED LEVEL AS PER THE INSTALLATION INSTRUCTIONS. ☐ YES ☐ NO
2. POWER SUPPLY AGREES WITH THE UNIT NAMEPLATE. ☐ YES ☐ NO
3. ELECTRICAL POWER WIRING IS INSTALLED PROPERLY. ☐ YES ☐ NO
4. UNIT IS PROPERLY GROUNDED. ☐ YES ☐ NO
5. ELECTRICAL CIRCUIT PROTECTION HAS BEEN SIZED AND INSTALLED PROPERLY. ☐ YES ☐ NO
6. ALL TERMINALS ARE TIGHT. ☐ YES ☐ NO
7. ALL PLUG ASSEMBLIES ARE TIGHT. ☐ YES ☐ NO
8. REMOVE SHIPPING BRACKETS FROM COMPRESSORS. ☐ YES ☐ NO

Chilled Water System Check (to be performed by installing contractor)

1. SYSTEM HAS BEEN PROPERLY CLEANED AND FILLED. ☐ YES ☐ NO
2. ALL CHILLED WATER VALVES ARE OPEN. ☐ YES ☐ NO

II. Preliminary Equipment Check (Cont)

3. ALL PIPING IS CONNECTED PROPERLY. ☐ YES ☐ NO
4. ALL AIR HAS BEEN PURGED FROM THE SYSTEM. ☐ YES ☐ NO
5. CHILLED WATER PUMP IS OPERATING WITH THE CORRECT ROTATION. ☐ YES ☐ NO
6. CHILLED WATER PUMP CONTROLLED BY CHILLER. ☐ YES ☐ NO

Manufacturer reserves the right to discontinue, or change at any time, specifications or designs without notice and without incurring obligations.

7. CHILLED WATER PUMP STARTER INTERLOCKED WITH CHILLER. ☐ YES ☐ NO

8. INTEGRATED 40 MESH Y STRAINER CLEAN. ☐ YES ☐ NO

9. WATER LOOP VOLUME GREATER THAN MINIMUM REQUIREMENTS. (See Table 30). ☐ YES ☐ NO

10. PROPER LOOP FREEZE PROTECTION PROVIDED TO _____ °F (°C). ☐ YES ☐ NO
ANTIFREEZE TYPE _____ CONCENTRATION _____%.
IF OUTDOOR AMBIENT IS BELOW 32 F (0° C) THEN ITEMS 11-13 HAVE TO BE COMPLETED TO PROVIDE COOLER FREEZE PROTECTION TO –20 F (–29 C). (REFER TO WINTER SHUTDOWN FOR PROPER COOLER WINTERIZATION PROCEDURE.)

NOTE: GLYCOL CONCENTRATIONS ABOVE 30% MAY REQUIRE A FLOW SWITCH RE-CALIBRATION.

11. OUTDOOR PIPING WRAPPED WITH ELECTRIC HEATER TAPE, INSULATED AND OPERATIONAL. ☐ YES ☐ NO

12. COOLER HEATERS INSTALLED AND OPERATIONAL. ☐ YES ☐ NO

13. CRANKCASE HEATERS (IF EQUIPPED) ARE SECURELY ATTACHED, OPERATIONAL, AND ENERGIZED TO REMOVE ANY LIQUID FROM THE COMPRESSOR. ☐ YES ☐ NO

SIGNATURE REQUIRED

PRELIMINARY START-UP COMPLETE.

INSTALLING/MECHANICAL CONTRACTOR _____ DATE_____

III. Unit Start-Up (Qualified individuals only. Factory start-up recommended.)

Design Information

CAPACITY	CEAT	EWT	LWT	FLUID TYPE	FLOW RATE	P.D.

1. ALL CABLES AND THERMISTORS HAVE BEEN INSPECTED FOR CROSSED WIRES. ☐ YES ☐ NO

2. ALL THERMISTORS ARE FULLY INSERTED INTO WELLS. ☐ YES ☐ NO

3. COMPRESSOR OIL LEVEL IS CORRECT. ☐ YES ☐ NO

4. VERIFY CRANKCASE HEATERS (IF EQUIPPED) HAVE BEEN ENERGIZED FOR 24 HOURS. ☐ YES ☐ NO

5. VERIFY COMPRESSOR MOUNTING BOLT TORQUE IS 7-10 FT-LB (9.5-13.5 N-M). ☐ YES ☐ NO

6. LEAK CHECK UNIT. LOCATE, REPAIR AND REPORT ANY REFRIGERANT LEAKS. ☐ YES ☐ NO

7. VOLTAGE IS WITHIN UNIT NAMEPLATE RANGE. ☐ YES ☐ NO

8. CONTROL TRANSFORMER PRIMARY CONNECTION SET FOR PROPER VOLTAGE. ☐ YES ☐ NO

9. CONTROL TRANSFORMER SECONDARY VOLTAGE = _____

CUT ALONG DOTTED LINE

CUT ALONG DOTTED LINE

III. Unit Start-Up (cont)

10. CHECK VOLTAGE IMBALANCE: A-B _____ A-C _____ B-C _____
    AVERAGE VOLTAGE = _____ (A-B + A-C + B-C)/3
    MAXIMUM DEVIATION FROM AVERAGE VOLTAGE = _____
    VOLTAGE IMBALANCE = _____% (MAX. DEVIATION/AVERAGE VOLTAGE) X 100
    VOLTAGE IMBALANCE LESS THAN 2%. ☐ YES ☐ NO
    (DO NOT START CHILLER IF VOLTAGE IMBALANCE IS GREATER THAN 2%.
    CONTACT LOCAL UTILITY FOR ASSISTANCE.)

11. VERIFY COOLER FLOW RATE. ☐ YES ☐ NO

PRESSURE ENTERING COOLER	_____ psig (kPa)
PRESSURE LEAVING COOLER	_____ psig (kPa)
COOLER PRESSURE DROP	_____ psig (kPa)
Psig X 2.31 ft/psi =	_____ ft of water
kPa X 0.334 m/psi	_____ m of water
COOLER FLOW RATE	_____ gpm (l/s) (See Cooler Pressure Drop Curves from Installation Instructions)

12. FLOW SWITCH OPERATION CHECKED. ☐ YES ☐ NO

Start and Operate Machine. Complete the Following:

1. COMPLETE COMPONENT TEST. ☐ YES ☐ NO
2. CHECK REFRIGERANT AND OIL CHARGE. ☐ YES ☐ NO
3. RECORD COMPRESSOR MOTOR CURRENT. ☐ YES ☐ NO
4. RECORD CONFIGURATION SETTINGS. ☐ YES ☐ NO
5. RECORD OPERATING TEMPERATURES AND PRESSURES. ☐ YES ☐ NO
6. PROVIDE OPERATING INSTRUCTIONS TO OWNER'S PERSONNEL. Instruction Time _____ hours.

OPERATING DATA:

RECORD THE FOLLOWING INFORMATION FROM THE PRESSURES AND TEMPERATURES MODES WHEN MACHINE IS IN A STABLE OPERATING CONDITION:

PRESSURE/TEMPERATURE

	CIRCUIT A	CIRCUIT B
DISCHARGE PRESSURE	DP.A	DP.B
SUCTION PRESSURE	SP.A	SP.B
SATURATED CONDENSING TEMP	SCT.A	SCT.B
SATURATED SUCTION TEMP	SST.A	SST.B
RETURN GAS TEMPERATURE	RGT.A	RGT.B
LIQUID LINE TEMPERATURE*		
DISCHARGE LINE TEMPERATURE*		

*Readings taken with a digital thermometer.

COOLER EWT	EWT	
COOLER LWT	LWT	
OUTDOOR-AIR TEMPERATURE	OAT	
CONTROL POINT	CTPT	
PERCENT TOTAL CAPACITY	CAP	
LEAD/LAG LEAVING FLUID	DLWT	(DUAL CHILLER CONTROL ONLY)

III. Unit Start-Up (cont)

Compressor Running Current — All readings taken at full load.

COMPRESSOR MOTOR CURRENT	L1	L2	L3
COMPRESSOR A1			
COMPRESSOR A2			
COMPRESSOR A3			
COMPRESSOR B1			
COMPRESSOR B2			
COMPRESSOR B3			

CONDENSER FAN MOTOR CURRENT	L1	L2	L3
FAN MOTOR 1			
FAN MOTOR 2			
FAN MOTOR 3			
FAN MOTOR 4			
FAN MOTOR 5			
FAN MOTOR 6			
FAN MOTOR 7			
FAN MOTOR 8			
FAN MOTOR 9			
FAN MOTOR 10			

COOLER PUMP MOTOR CURRENT	L1	L2	L3
COOLER PUMP 1			
COOLER PUMP 2			

RECORD SOFTWARE VERSIONS MODE — RUN STATUS

PRESS ENTER AND ESCAPE KEYS SIMULTANEOUSLY TO OBTAIN SOFTWARE VERSIONS.

SUBMODE	ITEM	ITEM EXPANSION	DISPLAY	ENTRY
VERS	MBB	CESR-131460- _ _-_ _		
	EXV	CESR-131172- _ _-_ _		
	AUX1	CESR-131333- _ _-_ _		
	EMM	CESR-131174- _ _-_ _		
	MARQ	CESR-131171- _ _-_ _		
	NAVI	CESR-131227- _ _-_ _		
	CXB	CESR-131173- _ _-_ _		

CUT ALONG DOTTED LINE

CUT ALONG DOTTED LINE

III. Unit Start-Up (cont)

PRESS ESCAPE KEY TO DISPLAY “UNIT.” RECORD CONFIGURATION SETTINGS BELOW.

UNIT (Configuration Settings)

SUBMODE	ITEM	ITEM EXPANSION	DISPLAY	ENTRY
UNIT		UNIT CONFIGURATION		
	SIZE	UNIT SIZE	XXX	
	SZA.1	COMPRESSOR A1 SIZE	XX TONS	
	SZA.2	COMPRESSOR A2 SIZE	XX TONS	
	SZA.3	COMPRESSOR A3 SIZE	XX TONS	
	SZB.1	COMPRESSOR B1 SIZE	XX TONS	
	SZB.2	COMPRESSOR B2 SIZE	XX TONS	
	SZB.3	COMPRESSOR B3 SIZE	XX TONS	
	SH.SP	SUPERHEAT SETPOINT	XX.X ∆F	
	FAN.S	FAN STAGING SELECT	XX	
	EXV	EXV MODULE INSTALLED	YES/NO	
	A1.TY	COMPRESSOR A1 DIGITAL?	YES/NO	
	MAX.T	MAXIMUM A1 UNLOAD TIME	XX SEC	
	FN.SQ	CONDFAN SEQ FOR SSN 2214	YES/NO	
	VLTS	UNIT VOLTAGE	XXX	
	F.POL	NUM POLES IN FAN	X	

PRESS ESCAPE KEY TO DISPLAY “UNIT”. PRESS DOWN ARROW KEY TO DISPLAY “OPT1”.
PRESS ENTER KEY. RECORD CONFIGURATION INFORMATION BELOW.

OPTIONS1 (Options Configuration)

SUBMODE	ITEM	ITEM EXPANSION	DISPLAY	ENTRY
OPT1		UNIT OPTIONS 1 HARDWARE		
	FLUD	COOLER FLUID	X	
	MLV.S	MINIMUM LOAD VALVE SELECT	YES/NO	
	CSB.E	CSB BOARDS ENABLE	ENBL/DSBL	
	CPC	COOLER PUMP CONTROL	ON/OFF	
	PM1E	COOLER PUMP 1 ENABLE	YES/NO	
	PM2E	COOLER PUMP 2 ENABLE	YES/NO	
	PM.P.S	COOLER PMP PERIODIC STRT	YES/NO	
	PM.SL	COOLER PUMP SELECT	X	
	PM.DY	COOLER PUMP SHUTDOWN DLY	XX MIN	
	PM.DT	PUMP CHANGEOVER HOURS	XXXX HRS	
	ROT.P	ROTATE COOLER PUMPS NOW	YES/NO	
	PMP.O	COOLER PUMP OPERATION	X	
	PM.HT	PUMP HIGH TEMP CUT OFF	XX.XF	
	EMM	EMM MODULE INSTALLED	YES/NO	
	CND.T	CND HX TYP 0=RTPF 1=MCHX	0/1	
	MOPS	EXV MOP SET POINT	XX	
	APPR	CONFIG APPROACH SETPOINT	XX	

III. Unit Start-Up (cont)

PRESS ESCAPE KEY TO DISPLAY “OPT1”. PRESS DOWN ARROW KEY TO DISPLAY “OPT2”. PRESS ENTER KEY.

RECORD CONFIGURATION INFORMATION BELOW.

OPTIONS2 (Options Configuration)

SUBMODE	ITEM	ITEM EXPANSION	DISPLAY	ENTRY
OPT2		UNIT OPTIONS 2 CONTROLS		
	CTRL	CONTROL METHOD	X	
	LOAD	LOADING SEQUENCE SELECT	X	
	LLCS	LEAD/LAG CIRCUIT SELECT	X	
	LCWT	HIGH LCW ALERT LIMIT	XX.X ∆F	
	DELY	MINUTES OFF TIME	XX	
	ICE.M	ICE MODE ENABLE	ENBL/DSBL	
	LS.MD	LOW SOUND MODE SELECT	X	
	LS.ST	LOW SOUND START TIME	00:00	
	LS.ND	LOW SOUND END TIME	00:00	
	LS.LT	LOW SOUND CAPACITY LIMIT	XXX %	
	ALR.C	ALARM RELAY USAGE	X	
	SER.T	SERVICE TRIO ENABLE	ENBL/DSBL	

PRESS ESCAPE KEY TO DISPLAY “OPT2”. PRESS DOWN ARROW KEY TO DISPLAY “CCN”. PRESS ENTER KEY.

RECORD CONFIGURATION INFORMATION BELOW.

CCN (CCN Network Configuration)

SUB-MODE	ITEM	ITEM EXPANSION	DISPLAY	ENTRY
CCN	CCNA	CCN ADDRESS	XXX	
	CCNB	CCN BUS NUMBER	XXX	
	BAUD	CCN BAUD RATE	X	

CUT ALONG DOTTED LINE

CUT ALONG DOTTED LINE

PRESS ESCAPE KEY TO DISPLAY “CCN”. PRESS DOWN ARROW KEY TO DISPLAY “EXV.A”. PRESS ENTER KEY.

RECORD CONFIGURATION INFORMATION BELOW.

EXV.A (Circuit A EXV Configuration)

SUB-MODE	ITEM	ITEM EXPANSION	DISPLAY	ENTRY
EXV.A	EXV.L	EXV OPENING AT LOW LWT	XX%	
	LWT.L	LWT FOR EXV MIN OPENING	XX° F	
	EXV.H	EXV OPENING AT HIGH LWT	XX%	
	LWT.H	LWT FOR EXV MAX OPENING	XX° F	
	MIN.A	EXV CIRC.A MIN POSITION	XXX.X%	
	RNG.A	EXVA STEPS IN RANGE	XXXXX	
	SPD.A	EXVA STEPS PER SECOND	XXXXX	
	POF.A	EXVA FAIL POSITION IN%	X.XX%	
	MIN.A	EXVA MINIMUM STEPS	XXXXX	
	MAX.A	EXVA MAXIMUM STEPS	XXXXX	
	OVR.A	EXVA OVERRUN STEPS	XXX.X%	
	A.ST.P	EXV CIRC A START POS	XXX.X%	
	TYP.A	EXVA STEPPER TYPE	0,1	
	H.SCT	HIGH SCT THRESHOLD	XXX.X° F	
	X.PCT	OPEN EXV X% ON 2ND COMP	XX.X%	
	X.PER	MOVE EXV X% ON DISCRSOL	XX.X%	
	A.PCT	PRE-OPEN EXV - FAN ADDING	XXX.X%	
	M.PCT	PRE-CLOSE EXV - FAN SUB	XXX.X%	
	S.PCT	PRE-CLOSE EXV - LAG SHUT	XXX SEC	
	DELY	LAG START DELAY	XXX SEC	
	L.DL.T	LOW SH DELTA T - EXV MOVE	XXX SEC	
	SHR.T	EXV RATE THRESHOLD	XX.X ΔF	
	L.EX.M	LOW SH OVERRIDE EXV MOVE	X.X%	

PRESS ESCAPE KEY TO DISPLAY “EXV.A”. PRESS DOWN ARROW KEY TO DISPLAY “EXV.B”. PRESS ENTER KEY.

RECORD CONFIGURATION INFORMATION BELOW.

EXV.B (Circuit B EXV Configuration)

SUB-MODE	ITEM	ITEM EXPANSION	DISPLAY	ENTRY
EXV.B	MIN.B	EXV CIRC.B MIN POSITION	XXX.X%	
	RNG.B	EXVB STEPS IN RANGE	XXXXX STEP	
	SPD.B	EXVB STEPS PER SECOND	XXXXX	
	POF.B	EXVB FAIL POSITION IN %	XXX.X%	
	MIN.B	EXVB MINIMUM STEPS	XXXXX STEP	
	MAX.B	EXVB MAXIMUM STEPS	XXXXX STEP	
	OVR.B	EXVB OVERRUN STEPS	XXX STEP	
	TYP.B	EXVB STEPPER TYPE	0,1	

III. Unit Start-Up (cont)

PRESS ESCAPE KEY TO DISPLAY “EXV.B”. PRESS DOWN ARROW KEY TO DISPLAY “MM”. PRESS ENTER KEY.

RECORD CONFIGURATION INFORMATION BELOW.

MM (Motormaster Configuration Settings)

SUB-MODE	ITEM	ITEM EXPANSION	DISPLAY	ENTRY
MM	MMR.S	MOTORMASTER SELECT	X	
	P.GAN	HEAD PRESSURE P GAIN	XX.X	
	I.GAN	HEAD PRESSURE I GAIN	XX.X	
	D.GAN	HEAD PRESSURE D GAIN	XX.X	
	MIN.S	MINIMUM FAN SPEED	XXX.X%	

PRESS ESCAPE KEY TO DISPLAY “MM”. PRESS DOWN ARROW KEY TO DISPLAY “RSET”. PRESS ENTER KEY.

RECORD CONFIGURATION INFORMATION BELOW.

RSET (Reset Configuration Settings)

SUBMODE	ITEM	ITEM EXPANSION	DISPLAY	ENTRY
RSET		RESET COOL TEMP		
	CRST	COOLING RESET TYPE	X	
	MA.DG	4-20 - DEGREES RESET	XX.X ΔF	
	RM.NO	REMOTE - NO RESET TEMP	XXX.X° F	
	RM.F	REMOTE - FULL RESET TEMP	XXX.X° F	
	RM.DG	REMOTE - DEGREES RESET	XX.X ΔF	
	RT.NO	RETURN - NO RESET TEMP	XXX.X ΔF	
	RT.F	RETURN - FULL RESET TEMP	XXX.X ΔF	
	RT.DG	RETURN - DEGREES RESET	XX.X ΔF	
	DMDC	DEMAND LIMIT SELECT	X	
	DM20	DEMAND LIMIT AT 20 MA	XXX %	
	SHNM	LOADSHED GROUP NUMBER	XXX	
	SHDL	LOADSHED DEMAND DELTA	XXX %	
	SHTM	MAXIMUM LOADSHED TIME	XXX MIN	
	DLS1	DEMAND LIMIT SWITCH 1	XXX.X %	
	DLS2	DEMAND LIMIT SWITCH 2	XXX.X %	
	LLEN	LEAD/LAG CHILLER ENABLE	ENBL/DSBL	
	MSSL	MASTER/SLAVE SELECT	SLVE/MAST	
	SLVA	SLAVE ADDRESS	XXX	
	LLBL	LEAD/LAG BALANCE SELECT	X	
	LLBD	LEAD/LAG BALANCE DELTA	XXX HRS	
	LLDY	LAG START DELAY	XXX MIN	
	PARA	PARALLEL CONFIGURATION	YES/NO	

CUT ALONG DOTTED LINE

CUT ALONG DOTTED LINE

III. Unit Start-Up (cont)

PRESS ESCAPE KEY TO DISPLAY “RSET”. PRESS DOWN ARROW KEY TO DISPLAY “SLCT”. PRESS ENTER KEY.

RECORD CONFIGURATION INFORMATION BELOW:

SLCT (Setpoint and Ramp Load Configuration)

SUBMODE	ITEM	ITEM EXPANSION	DISPLAY	ENTRY
SLCT		SETPOINT AND RAMP LOAD		
	CLSP	COOLING SETPOINT SELECT	X	
	RL.S	RAMP LOAD SELECT	ENBL/DSBL	
	CRMP	COOLING RAMP LOADING	X.X° F	
	SCHD	SCHEDULE NUMBER	XX	
	Z.GN	DEADBAND MULTIPLIER	X.X	

PRESS ESCAPE KEY SEVERAL TIMES TO GET TO THE MODE LEVEL (BLANK DISPLAY). USE THE ARROW KEYS TO SCROLL TO THE SET POINT LED. PRESS ENTER TO DISPLAY SETPOINTS. RECORD CONFIGURATION INFORMATION BELOW:

SETPOINT

SUBMODE	ITEM	ITEM EXPANSION	DISPLAY	ENTRY
COOL		COOLING SETPOINTS		
	CSP.1	COOLING SETPOINT 1	XXX.X° F	
	CSP.2	COOLING SETPOINT 2	XXX.X° F	
	CSP.3	ICE SETPOINT	XXX.X° F	
HEAD		HEAD PRESSURE SETPOINTS		
	H.DP	HEAD SET POINT	XXX.X° F	
	F.ON	FAN ON SET POINT	XXX.X° F	
	F.OFF	FAN OFF SET POINT	XXX.X° F	
	B.OFF	BASE FAN OFF DELTA TEMP	XX.X° F	
	F.DLT	FAN STAGE DELTA	XX.X ΔF	
FRZ		BRINE FREEZE SETPOINT		
	BR.FZ	BRINE FREEZE POINT	XXX.X° F	

III. Unit Start-Up (cont)

COMPONENT TEST

USE ESCAPE/ARROW KEYS TO ILLUMINATE CONFIGURATION LED. PRESS ENTER TO DISPLAY “DISP”. PRESS ENTER AGAIN TO DISPLAY “TEST” FOLLOWED BY “OFF”. PRESS ENTER TO STOP DISPLAY AT “OFF” AND ENTER AGAIN SO “OFF” DISPLAY FLASHES. “PASS” AND “WORD” WILL FLASH IF PASSWORD NEEDS TO BE ENTERED. PRESS ENTER TO DISPLAY PASSWORD FIELD AND USE THE ENTER KEY FOR EACH OF THE FOUR PASSWORD DIGITS. USE ARROW KEYS IF PASSWORD IS OTHER THAN STANDARD. AT FLASHING “OFF” DISPLAY, PRESS THE UP ARROW KEY TO DISPLAY “ON” AND PRESS ENTER. ALL LED SEGMENTS AND MODE LEDS WILL LIGHT UP. PRESS ESCAPE TO STOP THE TEST. PRESS ESCAPE TO RETURN TO THE “DISP” DISPLAY. PRESS THE ESCAPE KEY AGAIN AND USE THE ARROW KEYS TO ILLUMINATE THE SERVICE TEST LED. PRESS ENTER TO DISPLAY “TEST”. PRESS ENTER TO STOP DISPLAY AT “OFF” AND ENTER AGAIN SO “OFF” FLASHES. PRESS THE UP ARROW KEY AND ENTER TO ENABLE THE MANUAL MODE. PRESS ESCAPE AND DISPLAY NOW SAYS “TEST” “ON”. REFER TO THE TABLE BELOW.

Service Test Mode and Sub-Mode Directory

SUB-MODE	KEYPAD ENTRY	ITEM	DISPLAY	ITEM EXPANSION	COMMENT	COMPLETED (YES/NO)
TEST	ENTER		ON/OFF	SERVICE TEST MODE	To Enable Service Test Mode, move Enable/Off/Remote Control switch to OFF. Change TEST to ON. Move switch to ENABLE.	
OUTS	OUTPUTS AND PUMPS					
	ENTER	EXV.A	xxx%	EXV% OPEN		
	↓	EXV.B	xxx%	EXV% OPEN		
	↓	FAN1	ON/OFF	FAN 1 RELAY	Condenser fan contactor 1	
	↓	FAN2	ON/OFF	FAN 2 RELAY	Condenser fan contactor 2	
	↓	FAN3	ON/OFF	FAN 3 RELAY	Condenser fan contactor 3	
	↓	FAN4	ON/OFF	FAN 4 RELAY	Condenser fan contactor 4	
	↓	FAN5	ON/OFF	FAN 5 RELAY	Condenser fan contactor 5	
	↓	FAN6	ON/OFF	FAN 6 RELAY	Condenser fan contactor 6	
	↓	FAN7	ON/OFF	FAN 7 RELAY	Condenser fan contactor 7	
	↓	FAN8	ON/OFF	FAN 8 RELAY	Condenser fan contactor 8	
	↓	V.HPA	xx	VAR HEAD PRESS% CIRCUIT A		
	↓	V.HPB	xx	VAR HEAD PRESS% CIRCUIT B		
	↓	CLP.1	ON/OFF	COOLER PUMP RELAY 1		
	↓	CLP.2	ON/OFF	COOLER PUMP RELAY 2		
	↓	DIG.P	xxx	COMPRESSOR A1 LOAD PERCENT	Digital Scroll option only	
	↓	CL.HT	ON/OFF	COOLER/PUMP HEATER		
	↓	CCH.A	ON/OFF	CRANKCASE HEATER CIRCUIT A		
	↓	CCH.B	ON/OFF	CRANKCASE HEATER CIRCUIT B		
	↓	RMT.A	ON/OFF	REMOTE ALARM RELAY		

NOTE: If the unit has a single circuit, the Circuit B items will not appear in the display.

CUT ALONG DOTTED LINE

CUT ALONG DOTTED LINE

Service Test Mode and Sub-Mode Directory (cont)

SUB-MODE	KEYPAD ENTRY	ITEM	DISPLAY	ITEM EXPANSION	COMMENT	COMPLETED (YES/NO)
CMPA	CIRCUIT A COMPRESSOR TEST					
	ENTER	CC.A1	ON/OFF	COMPRESSOR A1 RELAY		
	↓	DIG.P	XXX%	COMP A1 UNLOAD PERCENT	Digital Scroll option only	
	↓	CC.A2	ON/OFF	COMPRESSOR A2 RELAY		
	↓	CC.A3	ON/OFF	COMPRESSOR A3 RELAY		
	↓	MLV	ON/OFF	MINIMUM LOAD VALVE RELAY		
CMPB	CIRCUIT B COMPRESSOR TEST					
	ENTER	CC.B1	ON/OFF	COMPRESSOR B1 RELAY	See Note	
	↓	CC.B2	ON/OFF	COMPRESSOR B2 RELAY	See Note	
	↓	CC.B3	ON/OFF	COMPRESSOR B3 RELAY	See Note	

NOTE: If the unit has a single circuit, the Circuit B items will not appear in the display.

COMMENTS:

SIGNATURES:

START-UP TECHNICIAN _____

DATE _____

CUSTOMER REPRESENTATIVE _____

DATE _____

CUT ALONG DOTTED LINE

CUT ALONG DOTTED LINE

© Carrier Corporation 2016