# Installation, Start-Up and Service Instructions

## CONTENTS

Page
**SAFETY CONSIDERATIONS** . . . . . 1
**INSTALLATION** . . . . . 1-33
**Step 1 — Provide Unit Support** . . . . . 1
• ROOF CURB
• SLAB MOUNT
**Step 2 — Field Fabricate Ductwork** . . . . . 2
**Step 3 — Install External Trap for Condensate Drain** . . . . . 2
**Step 4 — Rig and Place Unit** . . . . . 2
• POSITIONING
**Step 5 — Install Flue Hood** . . . . . 8
**Step 6 — Install Gas Piping** . . . . . 8
**Step 7 — Make Electrical Connection** . . . . . 8
• FIELD POWER SUPPLY
• FIELD CONTROL WIRING
• HEAT ANTICIPATOR SETTINGS
**Step 8 — Adjust Factory-Installed Options** . . . . . 11
• APOLLO CONTROL
• MANUAL OUTDOOR-AIR DAMPER
• OPTIONAL DURABLADE ECONOMIZER
• OPTIONAL ECONOMI$ER
**Step 9 — Adjust Evaporator-Fan Speed** . . . . . 20
**START-UP** . . . . . 34-36
**SERVICE** . . . . . 36-41
**TROUBLESHOOTING** . . . . . 42-46
**START-UP CHECKLIST** . . . . . CL-1

## SAFETY CONSIDERATIONS

Installation and servicing of air-conditioning equipment can be hazardous due to system pressure and electrical components. Only trained and qualified service personnel should install, repair, or service air-conditioning equipment.

Untrained personnel can perform basic maintenance functions of cleaning coils and filters and replacing filters. All other operations should be performed by trained service personnel. When working on air-conditioning equipment, observe precautions in the literature, tags and labels attached to the unit, and other safety precautions that may apply.

Follow all safety codes. Wear safety glasses and work gloves. Use quenching cloth for unbrazing operations. Have fire extinguishers available for all brazing operations.

**⚠ WARNING**

Disconnect gas piping from unit when leak testing at pressure greater than 3.4 kPa (1/2 psig). Pressures greater than 3.4 kPa (1/2 psig) will cause gas valve damage resulting in hazardous condition. If gas valve is ever subjected to pressure greater than 3.4 kPa (1/2 psig), it *must* be replaced before use. When pressure testing field-supplied gas piping at pressures of 3.4 kPa (1/2 psig) or less, a unit connected to such piping must be isolated by manually closing the gas valve(s).

**⚠ WARNING**

Before performing service or maintenance operations on unit, turn off main power switch to unit. Electrical shock could cause personal injury.

## INSTALLATION

Unit is shipped in the vertical discharge configuration. To convert to horizontal configuration, remove screws from side duct opening covers and remove covers. Using the same screws, install covers on vertical duct openings with the insulation side down. Seals around duct openings must be tight. See Fig. 1.

### Step 1 — Provide Unit Support

ROOF CURB — Assemble and install accessory roof curb in accordance with instructions shipped with curb. See Fig. 2. Install insulation, cant strips, roofing felt, and counter flashing as shown. *Ductwork must be attached to curb.* If gas, electric power or control power is to be routed through the curb, attach the accessory thru-the-curb service connection plates to the roof curb in accordance with the accessory installation instructions. Connection plates must be installed before unit is set in roof curb.

IMPORTANT: The gasketing of the unit to the roof curb is critical for a watertight seal. Install gasket supplied with the roof curb as shown in Fig. 2. Improperly applied gasket can also result in air leaks and poor unit performance.

Curb should be level. Unit leveling tolerances are shown in Fig. 3. This is necessary for unit drain to function properly. Refer to Accessory Roof Curb Installation Instructions for additional information as required.

Manufacturer reserves the right to discontinue, or change at any time, specifications or designs without notice and without incurring obligations.

SLAB MOUNT (Horizontal Units Only) — Provide a level concrete slab that extends a minimum of 152 mm (6 in.) beyond unit cabinet. Install a gravel apron in front of condenser coil air inlet to prevent grass and foliage from obstructing airflow.

NOTE: Horizontal units may be installed on a roof curb if required.

**Step 2 — Field Fabricate Ductwork —** Secure all ducts to roof curb and building structure on vertical units. *Do not connect ductwork to unit.* For horizontal applications, field-supplied flanges should be attached to horizontal discharge openings and all ductwork secured to the flanges. Insulate and weatherproof all external ductwork, joints, and roof openings with counter flashing and mastic in accordance with applicable codes.

Ducts passing through an unconditioned space must be insulated and covered with a vapor barrier.

If a plenum return is used on a vertical unit, the return should be ducted through the roof deck to comply with applicable fire codes.

A minimum clearance is not required around ductwork. Cabinet return-air static shall not exceed –87 Pa (–.35 in. wg) with Durablade economizer, –26 Pa (–.30 in. wg) with EconoMi$er or –112 Pa (–.45 in. wg) without economizer.

These units are designed for a minimum heating operation continuous return-air temperature of 10 C (50 F) (dry bulb), or an intermittent operation down to 7 C (45 F) (dry bulb), such as when used with a night set-back thermostat.

**Step 3 — Install External Trap for Condensate Drain —** The unit's 19-mm ($^3/_4$-in.) condensate drain connections are located at the bottom and side of the unit. Unit discharge connections do not determine the use of drain connections; either drain connection can be used with vertical or horizontal applications.

When using the standard side drain connection, make sure the plug (Red) in the alternate bottom connection is tight before installing the unit.

To use the bottom drain connection for a roof curb installation, relocate the factory-installed plug (Red) from the bottom connection to the side connection. See Fig. 4. The piping for the condensate drain and external trap can be completed after the unit is in place.

All units must have an external trap for condensate drainage. Install a trap at least 102-mm (4-in.) deep and protect against freeze-up. If drain line is installed downstream from the external trap, pitch the line away from the unit at 25 mm (1 in.) per 3 m (10 ft) of run. Do not use a pipe size smaller than the 19-mm ($^3/_4$-in.) unit connection.

**Step 4 — Rig and Place Unit —** Inspect unit for transportation damage. File any claim with transportation agency. Keep unit upright and do not drop. Spreader bars are not required if top crating is left on unit. Rollers may be used to move unit across a roof. Level by using unit frame as a reference. See Tables 1A and 1B and Fig. 5 for additional information. Operating weight is shown in Tables 1A and 1B and Fig. 5.

Lifting holes are provided in base rails as shown in Fig. 5 and 6. Refer to rigging instructions on unit.

**⚠ CAUTION**

All panels must be in place when rigging.

POSITIONING — Maintain clearance around and above unit to provide minimum distance from combustible materials, proper airflow, and service access. See Fig. 6.

Do not install unit in an indoor location. Do not locate unit air inlets near exhaust vents or other sources of contaminated air.

Be sure that unit is installed so that snow will not block the combustion intake or flue outlet.

Unit may be installed directly on wood flooring or on Class A, B, or C roof-covering material when roof curb is used.

*(Copy continued on page 4.)*

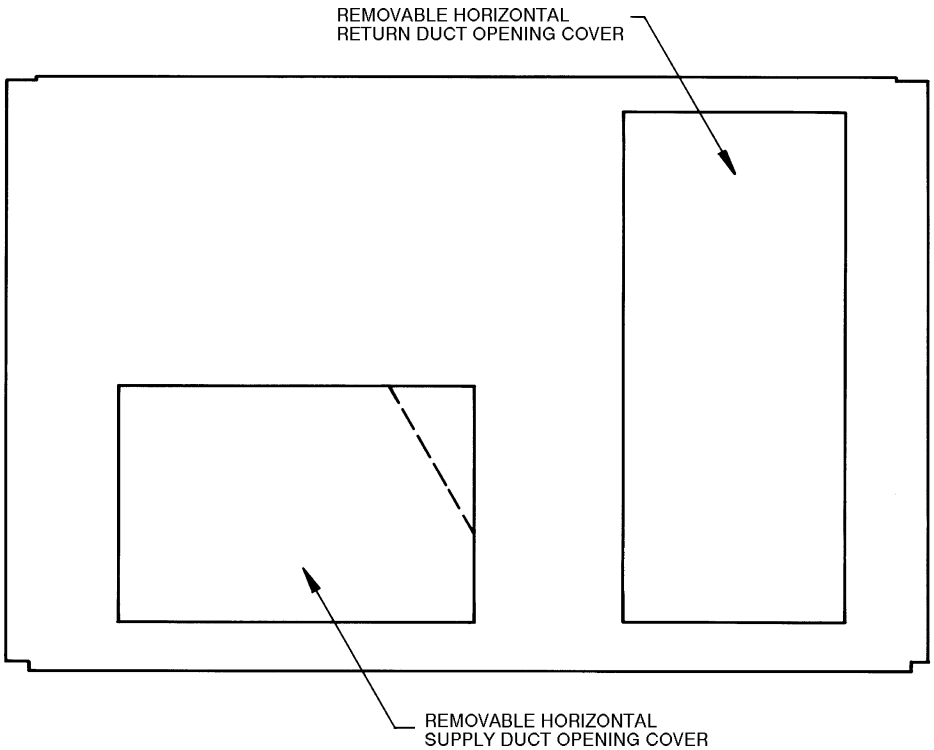


**Fig. 1 — Horizontal Conversion Panels**

| CONNECTOR PKG. ACCY. | B | C | D ALT DRAIN HOLE | GAS | POWER | CONTROL |
|---|---|---|---|---|---|---|
| CRBTMPWR001A00 | 2′-8 7/16″ [827] | 1′-10 15/16″ [583] | 1 3/4″ [44.5] | 3/4″ [19] NPT | 3/4″ [19] NPT | 1/2″ [12.7] |
| CRBTMPWR002A00 | | | | | 1 1/4″ [31.7] | |
| CRBTMPWR003A00 | | | | 1/2″ [12.7] NPT | 3/4″ [19] NPT | 1/2″ [12.7] |
| CRBTMPWR004A00 | | | | 3/4″ [19] NPT | 1 1/4″ [31.7] | |

| ROOF CURB ACCESSORY | "A" | UNIT SIZE 48TF |
|---|---|---|
| CRRFCURB003A00 | 1′-2″ [356] | 008-014 |
| CRRFCURB004A00 | 2′-0″ [610] | |

NOTES:
1. Roof curb accessory is shipped disassembled.
2. Insulated panels: 1-in. [25] thick polyurethane foam, 1 3/4 lb density.
3. Dimensions in [ ] are in millimeters.
4. Roof curb: 16-gage steel.
5. Attach ductwork to curb (flanges of duct rest on curb).
6. Service clearance 4 ft [1219] on each side.
7. Direction of airflow.
8. Connector packages CRBTMPWR001A00 and 2A00 are for thru-the-curb gas type. Packages CRBTMPWR003A00 and 4A00 are for thru-the-bottom type gas connections.

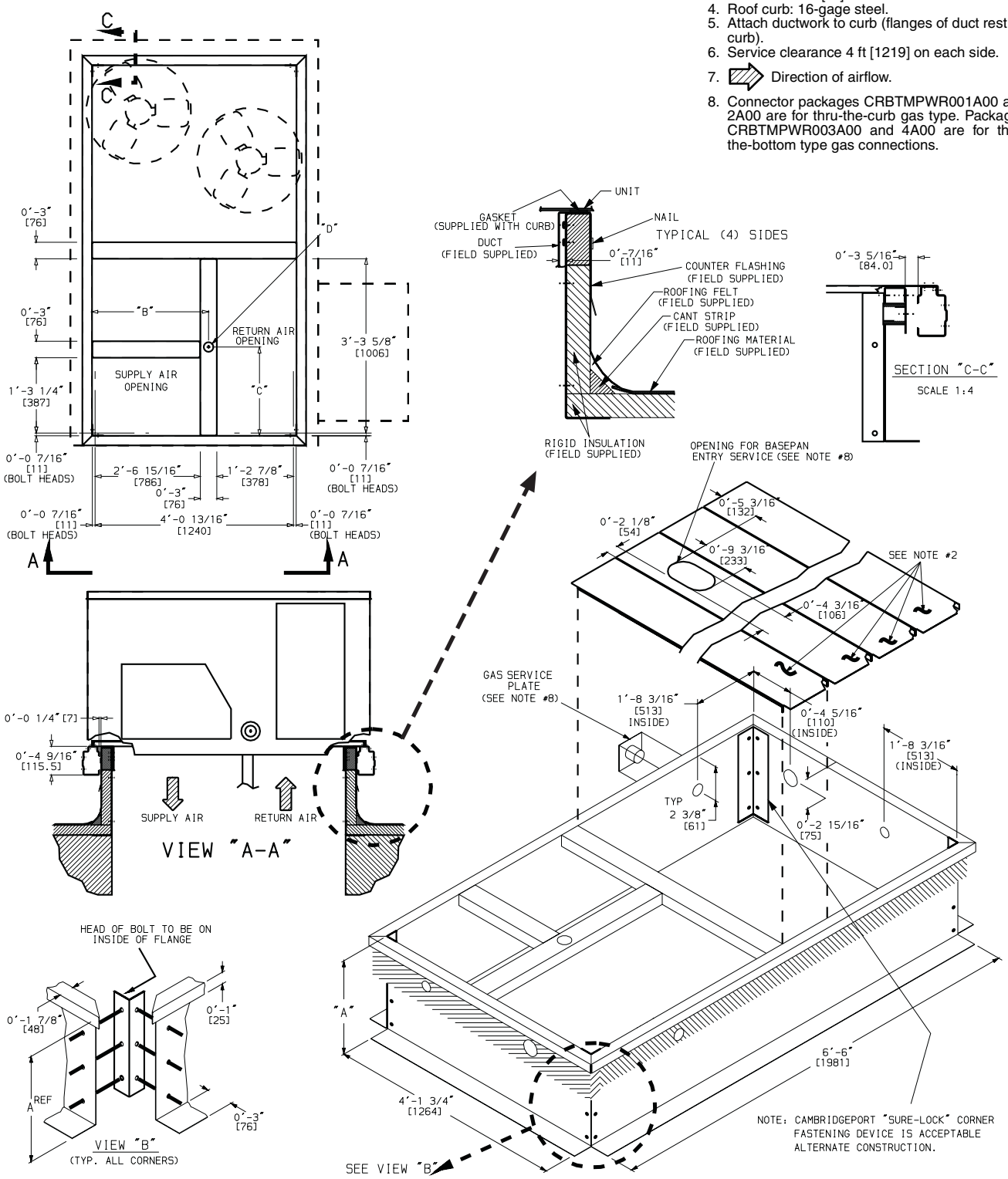


**Fig. 2 — Roof Curb Details**

Although unit is weatherproof, guard against water from higher level runoff and overhangs.

Position unit on roof curb so that the following clearances are maintained: 7 mm ($^1/_4$-in.) clearance between roof curb and base rails on each side and duct end of unit; 84 mm ($3^5/_{16}$-in.) clearance between roof curb and condenser coil end of unit. (See Fig. 2, section C-C.)

Locate mechanical draft system flue assembly at least 1219 mm (48 in.) from any opening through which combustion products could enter the building, and at least 1219 mm (48 in.) from an adjacent building or combustible material. When unit is located adjacent to public walkways, flue assembly must be at least 2.13 m (7 ft) above grade.

Flue vent discharge must have a minimum horizontal clearance of 1219 mm (48 in.) from electric and gas meters, gas regulators, and gas relief equipment.

Flue gas can deteriorate building materials. Orient unit so that flue gas will not affect building materials.

Adequate combustion-air space must be provided for proper operation of this equipment. Be sure that installation complies with all local codes and Section 5.3, Air for Combustion and Ventilation, NFGC (National Fuel Gas Code), ANSI (American National Standards Institute), latest revision, U.S.A. Standards.

*(Copy continued on page 8.)*

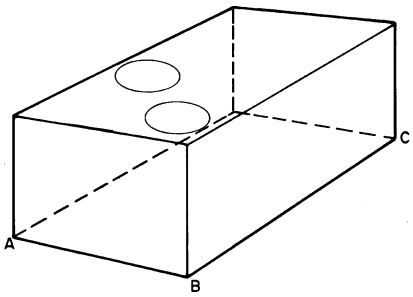


MAXIMUM ALLOWABLE DIFFERENCE mm (in.)

| A-B | B-C | A-C |
|---|---|---|
| 13 (0.5) | 25 (1.0) | 25 (1.0) |

**Fig. 3 — Unit Leveling Tolerances**

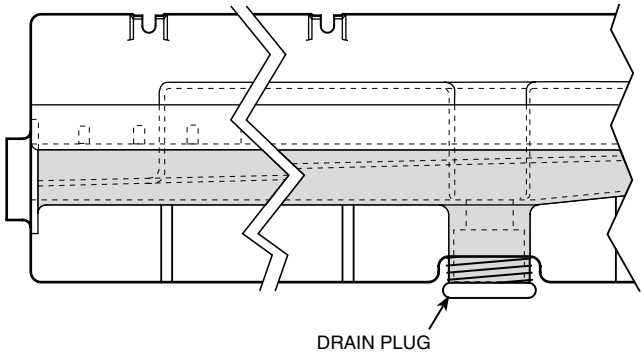


NOTE: Drain plug is shown in factory-installed position.

**Fig. 4 — Condensate Drain Pan**

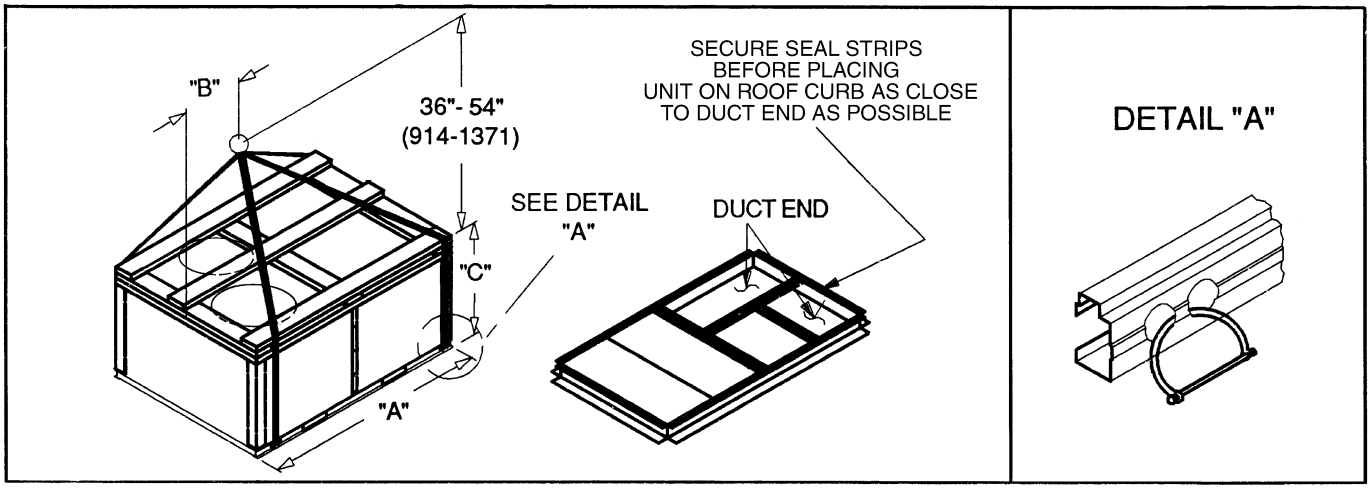


NOTES:
1. Dimension in ( ) is in millimeters.
2. Hook rigging shackles through holes in base rail as shown in detail "A." Holes in base rails are centered around the unit center of gravity. Use wooden top skid when rigging to prevent rigging straps from damaging unit.
3. Weights include base unit without economizer. See Tables 1A and 1B for economizer weights.

| UNIT 48TF | MAX WEIGHT | | DIMENSIONS | | | | | |
|---|---|---|---|---|---|---|---|---|
| | | | "A" | | "B" | | "C" | |
| | lb | kg | in. | mm | in. | mm | in. | mm |
| D/E/F008 | 870 | 395 | 87.38 | 2219 | 40.25 | 1022 | 41.31 | 1050 |
| D/E/F012 | 1035 | 469 | 87.38 | 2219 | 40.25 | 1022 | 49.31 | 1253 |
| D/E014 | 1050 | 476 | 87.38 | 2219 | 40.25 | 1022 | 49.31 | 1253 |

**⚠ CAUTION**

All panels must be in place when rigging.

**Fig. 5 — Rigging Details**

## Table 1A — Physical Data (SI)

| UNIT SIZE 48TF | 008 | | | 012 | | | 014 | |
|---|---|---|---|---|---|---|---|---|
| Low Heat (D), Medium Heat (E), High Heat (F) | D | E | F | D | E | F | D | E |
| **NOMINAL CAPACITY (kW)** | 21.5 | | | 29.2 | | | 35.9 | |
| **OPERATING WEIGHT (kg)** | | | | | | | | |
| Unit | 395 | | | 469 | | | 476 | |
| Durablade Economizer | 20 | | | 20 | | | 20 | |
| EconoMi$er | 28 | | | 28 | | | 28 | |
| Roof Curb* | 65 | | | 65 | | | 65 | |
| **COMPRESSOR TYPE** | Hermetic | | | Hermetic | | | Scroll | |
| Quantity | 2 | | | 2 | | | 2 | |
| Oil (ml) | 1479 ea | | | 1479 ea | | | 1597 ea | |
| **REFRIGERANT TYPE** | R-22 | | | | | | | |
| Operating Charge (kg) | | | | | | | | |
| Circuit 1 | 2.10 | | | 3.08 | | | 3.49 | |
| Circuit 2 | 2.22 | | | 3.22 | | | 3.49 | |
| **CONDENSER COIL** | Enhanced Copper Tubes, Aluminum Lanced Fins | | | | | | | |
| Rows...Fins/m | 1...669 | | | 2...669 | | | 2...669 | |
| Total Face Area (sq m) | 1.90 | | | 1.92 | | | 2.30 | |
| **CONDENSER FAN** | Propeller Type | | | | | | | |
| Nominal L/s | 2880 | | | 3050 | | | 3050 | |
| Quantity...Diameter (mm) | 2...559 | | | 2...559 | | | 2...559 | |
| Motor BkW...r/s | .19...15.5 | | | .19...15.5 | | | .19...15.5 | |
| **EVAPORATOR COIL** | Enhanced Copper Tubes, Aluminum Double-Wavy Fins, Acutrol™ Feed Device | | | | | | | |
| Rows...Fins/m | 3...590 | | | 3...590 | | | 4...590 | |
| Total Face Area (sq m) | 0.74 | | | 0.93 | | | 1.03 | |
| **EVAPORATOR FAN** | Centrifugal Type | | | | | | | |
| Quantity...Size (mm x mm) | 1...381 x 381 | | | 1...381 x 381 | | | 1...381 x 381 | |
| Type Drive | Belt | | | Belt | | | Belt | |
| Nominal L/s | 1230 | | | 1700 | | | 1980 | |
| Motor kW | 1.12 | | | 1.50 | | | 2.24 | |
| Maximum Continuous BkW | 1.79 | | | 1.79 | | | 2.76 | |
| Motor Frame Size | 56 | | | 56 | | | 56 | |
| Fan r/s Range | 8.2-11.7 | | | 9.5-13.0 | | | 12.0-15.0 | |
| Motor Bearing Type | Ball | | | Ball | | | Ball | |
| Maximum Allowable r/s | 26.7 | | | 26.7 | | | 26.7 | |
| Motor Pulley Pitch Diameter Min/Max (mm) | 61/86 | | | 71/97 | | | 102/127 | |
| Nominal Motor Shaft Diameter (mm) | 16 | | | 16 | | | 22 | |
| Fan Pulley Pitch Diameter (mm) | 178 | | | 178 | | | 203 | |
| Nominal Fan Shaft Diameter (mm) | 25 | | | 25 | | | 25 | |
| Belt, Quantity...Type...Length (mm) | 1...A...1245 | | | 1...A...1245 | | | 1...A...1346 | |
| Pulley Center Line Distance (mm) | 425-489 | | | 403-445 | | | 403-445 | |
| Speed Change per Full Turn of Movable Pulley Flange (r/s) | .70 | | | .70 | | | .60 | |
| Movable Pulley Maximum Full Turns From Closed Position | 5 | | | 5 | | | 5 | |
| Factory Setting | 5 | | | 5 | | | 5 | |
| Factory Speed Setting (r/s) | 8.2 | | | 9.5 | | | 12.0 | |
| Fan Shaft Diameter at Pulley (mm) | 25 | | | 25 | | | 25 | |
| **FURNACE SECTION** | | | | | | | | |
| Rollout Switch Cutout Temp (C) | 90.6 | | | 90.6 | | | 90.6 | |
| Burner Orifice Diameter (mm) | | | | | | | | |
| Natural Gas — Std | 3.05 | | | 3.05 | 3.05 | 3.28 | 3.05 | 3.28 |
| Liquid Propane — Alt | 2.44 | | | 2.44 | 2.44 | 2.59 | 2.44 | 2.59 |
| Thermostat Heat Anticipator Setting (amps) | | | | | | | | |
| 400 v Stage 1 | .14 | .14 | .14 | .14 | | | .14 | |
| Stage 2 | .14 | .20 | .20 | .20 | | | .20 | |
| Gas Input (kW) Stage 1 | 21.1 | 31.9 | 39.8 | 31.9 | 39.8 | 43.9 | 39.8 | 43.9 |
| Stage 2 | 31.4 | 50.4 | 59.8 | 50.4 | 59.8 | 65.6 | 59.8 | 65.6 |
| Efficiency (Steady State) (%) | | 80 | | | 80 | | 80 | |
| Temperature Rise Range (C) | –6-10 | 2-18 | 7-24 | 2-18 | 7-24 | 4-21 | 7-24 | 4-21 |
| Manifold Pressure (kPa) | | | | | | | | |
| Natural Gas — Std | | 8.3 | | | 8.3 | | 8.3 | |
| Liquid Propane — Alt | | 8.3 | | | 8.3 | | 8.3 | |
| Field Gas Connection Size (mm) | 13 | 19 | 19 | 19 | 19 | 19 | 19 | 19 |
| **HIGH-PRESSURE SWITCH (kPa)** | | | | | | | | |
| Standard Compressor Internal Relief (Differential) | 3103 ± 345 | | | | | | 3448 ± 345 | |
| Cutout | 2951 | | | | | | | |
| Reset (Auto.) | 2206 | | | | | | | |
| **LOW-PRESSURE SWITCH (kPa)** | | | | | | | | |
| Cutout | 48 ± 21 | | | | | | | |
| Reset (Auto.) | 152 ± 48 | | | | | | | |
| **FREEZE PROTECTION THERMOSTAT** | | | | | | | | |
| Opens (C) | –1 ± 3 | | | | | | | |
| Closes (C) | 7 ± 3 | | | | | | | |
| **OUTDOOR-AIR INLET SCREENS** | Cleanable | | | | | | | |
| Quantity...Size (mm) | 1...508 x 635 x 25<br>1...406 x 635 x 25 | | | | | | | |
| **RETURN-AIR FILTERS** | Throwaway | | | | | | | |
| Quantity...Size (mm) | 4...406 x 508 x 51 | | | 4...508 x 508 x 51 | | | 4...508 x 508 x 51 | |

LEGEND

**Bhp** — Brake Horsepower
**BkW** — Fan Input Watts x Motor Efficiency

*Weight of 356 mm (14-in.) roof curb.

NOTE: The 48TF units have a loss-of-charge (low pressure) switch located in the liquid line.

## Table 1B — Physical Data (English)

| UNIT SIZE 48TF | 008 | | | 012 | | | 014 | |
|---|---|---|---|---|---|---|---|---|
| Low Heat (D), Medium Heat (E), High Heat (F) | D | E | F | D | E | F | D | E |
| **NOMINAL CAPACITY (tons)** | 6.1 | | | 8.3 | | | 10.2 | |
| **OPERATING WEIGHT (lb)** | | | | | | | | |
| Unit | 870 | | | 1035 | | | 1050 | |
| Durablade Economizer | 44 | | | 44 | | | 44 | |
| EconoMi$er | 62 | | | 62 | | | 62 | |
| Roof Curb* | 143 | | | 143 | | | 143 | |
| **COMPRESSOR TYPE** | Hermetic | | | Hermetic | | | Scroll | |
| Quantity | 2 | | | 2 | | | 2 | |
| Oil (oz) | 50 ea | | | 50 ea | | | 54 ea | |
| **REFRIGERANT TYPE** | R-22 | | | | | | | |
| Operating Charge (lb-oz) | | | | | | | | |
| Circuit 1 | 4-10 | | | 6-13 | | | 7-11 | |
| Circuit 2 | 4-11 | | | 7- 2 | | | 7- 8 | |
| **CONDENSER COIL** | Enhanced Copper Tubes, Aluminum Lanced Fins | | | | | | | |
| Rows...Fins/in. | 1...17 | | | 2...17 | | | 2...17 | |
| Total Face Area (sq ft) | 20.50 | | | 20.50 | | | 25.00 | |
| **CONDENSER FAN** | Propeller Type | | | | | | | |
| Nominal Cfm | 6100 | | | 6500 | | | 6500 | |
| Quantity...Diameter (in.) | 2...22 | | | 2...22 | | | 2...22 | |
| Motor BkW...Rpm | 1/4...930 | | | 1/4...930 | | | 1/4...930 | |
| **EVAPORATOR COIL** | Enhanced Copper Tubes, Aluminum Double-Wavy Fins, Acutrol™ Feed Device | | | | | | | |
| Rows...Fins/in. | 3...15 | | | 3...15 | | | 4...15 | |
| Total Face Area (sq ft) | 8.0 | | | 10.0 | | | 11.1 | |
| **EVAPORATOR FAN** | Centrifugal Type | | | | | | | |
| Quantity...Size (in.) | 1...15 x 15 | | | 1...15 x 15 | | | 1...15 x 15 | |
| Type Drive | Belt | | | Belt | | | Belt | |
| Nominal Cfm | 2600 | | | 3500 | | | 4200 | |
| Motor Hp | 1 1/2 | | | 2 | | | 3 | |
| Maximum Continuous Bhp | 2.40 | | | 2.40 | | | 3.70 | |
| Motor Frame Size | 56 | | | 56 | | | 56 | |
| Fan Rpm Range | 492-700 | | | 571-779 | | | 717-900 | |
| Motor Bearing Type | Ball | | | Ball | | | Ball | |
| Maximum Allowable Rpm | 1600 | | | 1600 | | | 1600 | |
| Motor Pulley Pitch Diameter Min/Max (in.) | 2.4/3.4 | | | 2.8/3.8 | | | 4.0/5.0 | |
| Nominal Motor Shaft Diameter (in.) | 5/8 | | | 5/8 | | | 7/8 | |
| Fan Pulley Pitch Diameter (in.) | 7.0 | | | 7.0 | | | 8.0 | |
| Nominal Fan Shaft Diameter (in.) | — | | | — | | | — | |
| Belt, Quantity...Type...Length (in.) | 1...A...49 | | | 1...A...49 | | | 1...A...53 | |
| Pulley Center Line Distance (in.) | 16.75-19.25 | | | 15.85-17.50 | | | 15.85-17.50 | |
| Speed Change per Full Turn of Movable Pulley Flange (rpm) | 41 | | | 41 | | | 36 | |
| Movable Pulley Maximum Full Turns From Closed Position | 5 | | | 5 | | | 5 | |
| Factory Setting | 5 | | | 5 | | | 5 | |
| Factory Speed Setting (rpm) | 492 | | | 571 | | | 717 | |
| Fan Shaft Diameter at Pulley (in.) | 1 | | | 1 | | | 1 | |
| **FURNACE SECTION** | | | | | | | | |
| Rollout Switch Cutout Temp (F) | 195 | | | 195 | | | 195 | |
| Burner Orifice Diameter (in. ...drill size) | | | | | | | | |
| Natural Gas — Std | .120...31 | | | .120...31 | .120...31 | .129...30 | .120...31 | .129...30 |
| Liquid Propane — Alt | .096...41 | | | .096...41 | .096...41 | .102...38 | .096...41 | .102...38 |
| Thermostat Heat Anticipator Setting (amps) | | | | | | | | |
| 400 v Stage 1 | .14 | .14 | .14 | .14 | | | .14 | |
| Stage 2 | .14 | .20 | .20 | .20 | | | .20 | |
| Gas Input (Btuh) Stage 1 | 72,000 | 109,000 | 136,000 | 109,000 | 136,000 | 150,000 | 136,000 | 150,000 |
| ‘ | 107,000 | 172,000 | 204,000 | 172,000 | 204,000 | 224,000 | 204,000 | 224,000 |
| Efficiency (Steady State) (%) | 80 | | | 80 | | | 80 | |
| Temperature Rise Range (F) | 20-50 | 35-65 | 45-75 | 35-65 | 45-75 | 40-70 | 45-75 | 40-70 |
| Manifold Pressure (in. wg) | | | | | | | | |
| Natural Gas — Std | 3.5 | | | 3.5 | | | 3.5 | |
| Liquid Propane — Alt | 3.5 | | | 3.5 | | | 3.5 | |
| Field Gas Connection Size (in.) | 1/2 | 3/4 | 3/4 | 3/4 | | | 3/4 | |
| **HIGH-PRESSURE SWITCH (psig)** | | | | | | | | |
| Standard Compressor Internal Relief (Differential) | 450 ± 50 | | | | | | 500 ± 50 | |
| Cutout | 428 | | | | | | | |
| Reset (Auto.) | 320 | | | | | | | |
| **LOW-PRESSURE SWITCH (psig)** | | | | | | | | |
| Cutout | 7 ± 3 | | | | | | | |
| Reset (Auto.) | 22 ± 7 | | | | | | | |
| **FREEZE PROTECTION THERMOSTAT** | | | | | | | | |
| Opens (F) | 30 ± 5 | | | | | | | |
| Closes (F) | 45 ± 5 | | | | | | | |
| **OUTDOOR-AIR INLET SCREENS** | Cleanable | | | | | | | |
| Quantity...Size (in.) | 1...20 x 25 x 1<br>1...16 x 25 x 1 | | | | | | | |
| **RETURN-AIR FILTERS** | Throwaway | | | | | | | |
| Quantity...Size (in.) | 4...16 x 20 x 2 | | | 4...20 x 20 x 2 | | | 4...20 x 20 x 2 | |

LEGEND

**Bhp** — Brake Horsepower
**BkW** — Fan Input Watts x Motor Efficiency

*Weight of 356 mm (14-in.) roof curb.

NOTE: The 48TF units have a loss-of-charge (low pressure) switch located in the liquid line.

| UNIT 48TF | STANDARD UNIT WEIGHT | | DURABLADE ECONOMIZER WEIGHT | | ECONOMI$ER WEIGHT | | CORNER WEIGHT (A) | | CORNER WEIGHT (B) | | CORNER WEIGHT (C) | | CORNER WEIGHT (D) | | "H" | | "J" | | "K" | | "L" | |
|---|---|---|---|---|---|---|---|---|---|---|---|---|---|---|---|---|---|---|---|---|---|---|
| | Lb | Kg | Lb | Kg | Lb | Kg | Lb | Kg | Lb | Kg | Lb | Kg | Lb | Kg | ft-in. | [mm] | ft-in. | [mm] | ft-in. | [mm] | ft-in. | [mm] |
| D/E/F008 | 870 | 395 | 44 | 20 | 62 | 28 | 189 | 86 | 161 | 73 | 239 | 109 | 280 | 127 | 1-2 7/8 | [ 378] | 3-5 5/16 | [1050] | 2-9 11/16 | [856] | 2- 2 7/16 | [672] |
| D/E/F012 | 1035 | 469 | 44 | 20 | 62 | 28 | 225 | 102 | 192 | 87 | 285 | 129 | 333 | 151 | 2-5 7/8 | [ 759] | 4-1 5/16 | [1253] | 3-0 3/8 | [924] | 2-10 7/16 | [875] |
| D/E014 | 1050 | 476 | 44 | 20 | 62 | 28 | 228 | 103 | 195 | 88 | 289 | 131 | 338 | 153 | 1-2 7/8 | [ 378] | 4-1 5/16 | [1253] | 3-0 3/8 | [924] | 2-10 7/16 | [875] |

NOTES:
1. Dimensions in [ ] are in millimeters.
2. Center of gravity.
3. Direction of airflow.
4. On vertical discharge units, ductwork to be attached to accessory roof curb only. For horizontal discharge units, field-supplied flanges should be attached to horizontal discharge openings, and all ductwork should be attached to the flanges.
5. Minimum clearance (local codes or jurisdiction may prevail):
   a. Between unit, flue side and combustible surfaces, 36 in. [914].
   b. Bottom of unit to combustible surfaces (when not using curb), 1 in. [25]. Bottom of base rail to combustible surfaces (when not using curb) 0 inches.
   c. Condenser coil, for proper airflow, 36 in. [914] one side, 12 in. [304] the other. The side getting the greater clearance is optional.
   d. Overhead, 60 in. [1624] to assure proper condenser fan operation.
   e. Between units, control box side, 42 in. [1067] per NEC (National Electrical Code).
   f. Between unit and ungrounded surfaces, control box side, 36 in. [914] per NEC.
   g. Between unit and block or concrete walls and other grounded surfaces, control box side, 42 in. [1067] per NEC.
   h. Horizontal supply and return end, 0 inches.
6. With the exception of the clearance for the condenser coil and combustion side as stated in notes 5a, b and c, a removable fence or barricade requires no clearance.
7. Units may be installed on combustible floors made from wood or Class A, B, or C roof covering material if set on base rail.
8. The vertical center of gravity is 1′-7″ [483] for 008, 1′-11″ [584] for 012 and 014 up from the bottom of the base rail.

| | CONNECTION SIZES |
|---|---|
| A | 1 3/8″ Dia [35] Field Power Supply Hole |
| B | 2 1/2″ Dia [64] Power Supply Knockout |
| C | 1 3/4″ Dia [44] Charging Port Hole |
| D | 7/8″ Dia [22] Field Control Wiring Hole |
| E | 3/4″ [19] - 14 NPT Condensate Drain |
| F | 1/2″ [13] - 14 NPT Gas Connection 48TFD008<br>3/4″ [19] - 14 NPT Gas Connection 48TFE,F008 48TFD,E012 & 014, 48TJF012 |
| G | 2″ Dia [51] Power Supply Knockout |

BOTTOM POWER CHART, THESE HOLES REQUIRED FOR USE WITH ACCESSORY PACKAGES — CRBTMPWR002A00 (POWER AND CONTROL) AND CRBTMPWR004A00 (POWER, CONTROL, AND GAS)

| THREADED CONDUIT SIZE | WIRE USE | REQURED HOLE SIZES (MAX.) |
|---|---|---|
| 1/2″ [12.7] | 24 V | 7/8″ [22.2] |
| 1 1/4″ [31.7] | Power | 1 3/4″ [44.4] |
| 3/4″ [19] FPT | Gas | 1 5/8″ [41.3] |

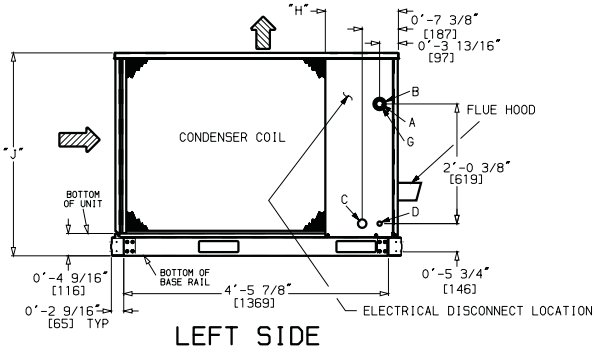


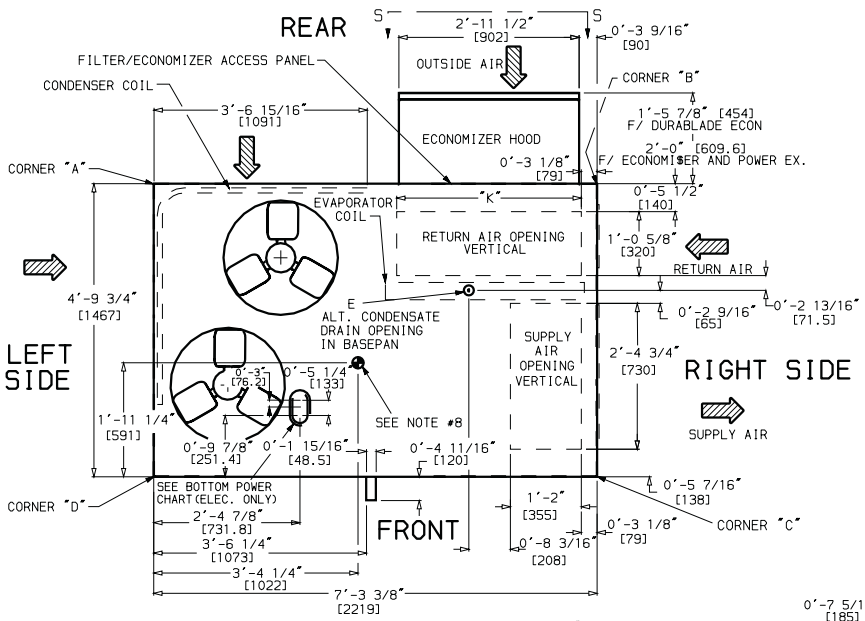


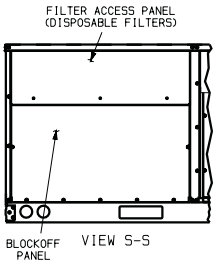


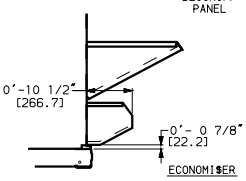


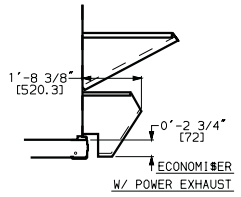


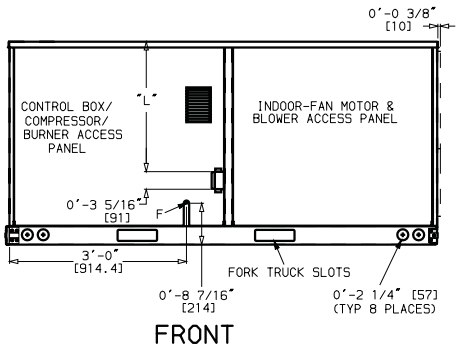


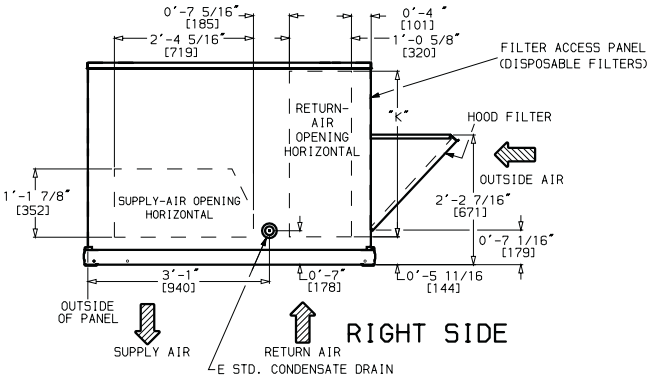


**Fig. 6 — Base Unit Dimensions**

**Step 5 — Install Flue Hood —** Flue hood is shipped screwed to the burner compartment access panel. Remove from shipping location and, using screws provided, install flue hood and screen in location shown in Fig. 7.

**Step 6 — Install Gas Piping —** Unit is equipped for use with type of gas shown on nameplate. Refer to local building codes.

For natural gas applications, gas pressure at unit gas connection must not be less than 13.5 kPa (4.0 in. wg) (17.0 kPa [5.0 in. wg] in high heat units) or greater than 44.0 kPa (13.0 in. wg) while unit is operating. For liquid propane applications, the gas pressure must not be less than 17.0 kPa (5.0 in. wg) or greater than 44.0 kPa (13.0 in. wg) at the unit connection.

Size gas supply piping for 1.7 kPa (0.5 in. wg) maximum pressure drop. Do not use supply pipe smaller than unit gas connection.

NOTE: When installing gas piping to gas valve inlet, use properly sized back-up wrench on inlet flange flats.

Support gas piping as shown in the table in Fig. 8. For example, a 19 mm ($^3/_4$-in.) gas pipe must have one field-fabricated support beam every 2.4 m (8 ft).

See Fig. 8 for typical pipe guide and locations of external manual gas shutoff valve.

## Step 7 — Make Electrical Connections

**⚠ WARNING**

Unit cabinet must have an uninterrupted, unbroken electrical ground to minimize the possibility of personal injury if an electrical fault should occur. This ground may consist of electrical wire connected to unit ground lug in control compartment, or conduit approved for electrical ground when installed in accordance with NEC (National Electrical Code), ANSI/NFPA (National Fire Protection Association), latest edition (U.S.A. Standards), and local electrical codes. *Do not use gas piping as an electrical ground.* Failure to follow this warning could result in the installer being liable for personal injury of others.

FIELD POWER SUPPLY — All units are factory wired for the voltage shown on the nameplate.

Refer to unit label diagram for additional information. Pigtails are provided for field service.

When installing units, provide a disconnect per local codes. Use copper conductors only when splice connectors are used.

All field wiring must comply with local requirements.

Install conduit through side panel openings indicated in Fig. 6. Route power lines through connector to terminal connections as shown in Fig. 9.

Voltages between phases must be balanced within 2% and the current within 10%. Use the formula shown in Table 2, Note 2 to determine the percentage of voltage imbalance. Operation on improper line voltage or excessive phase imbalance constitutes abuse and may cause damage to electrical components. Such operation would invalidate any applicable Carrier warranty.

NOTE: If field-installed thru-the-bottom connections are used, refer to the accessory installation instructions for power wiring. Refer to Fig. 6 for drilling holes in basepan.

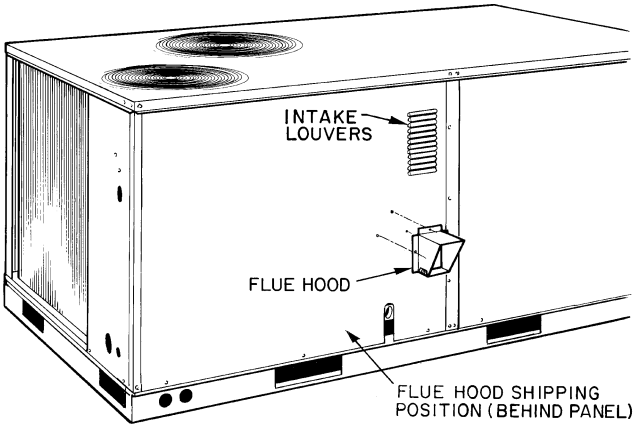


**Fig. 7 — Flue Hood Details**

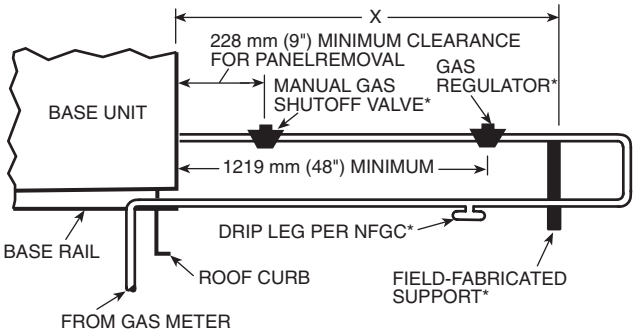


LEGEND

**NFGC —** National Fuel Gas Code (U.S.A. Standard)

*Field supplied.

NOTE: Follow all local codes.

SPACING OF SUPPORTS

| STEEL PIPE NOMINAL DIAMETER mm (in.) | X DIMENSION m (ft) |
|---|---|
| 13 ($^1/_2$) | 1.8 (6) |
| 19 or 25 ($^3/_4$ or 1) | 2.4 (8) |
| 32 or larger ($1^1/_4$ or larger) | 3.0 (10) |

**Fig. 8 — Gas Piping Guide (With Accessory Thru-the-Curb Service Connections)**

FIELD CONTROL WIRING — Install a Carrier-approved accessory thermostat assembly according to installation instructions included with the accessory. Locate thermostat assembly on a solid wall in the conditioned space to sense average temperature in accordance with thermostat installation instructions.

NOTE: For wire runs up to 15 m (50 ft), use no. 18 AWG (American Wire Gage) insulated wire (35 C minimum). For 15 to 23 m (51 to 75 ft), use no. 16 AWG insulated wire (35 C minimum). For over 23 m (75 ft), use no. 14 AWG insulated wire (35 C minimum). All wire larger than no. 18 AWG cannot be directly connected to the thermostat and will require a junction box and splice at the thermostat. Refer to Table 3 for wire conversions.

## Table 2 — Electrical Data

| UNIT 48TF | NOMINAL VOLTAGE (50 Hz) | VOLTAGE RANGE | | COMPR (ea) | | OFM (ea) | IFM | POWER SUPPLY | | MINIMUM UNIT DISCONNECT | |
|---|---|---|---|---|---|---|---|---|---|---|---|
| | | Min | Max | RLA | LRA | FLA | FLA | MCA | MOCP* | FLA | LRA |
| **008** | 400 (3 phase) | 360 | 440 | 6.4 | 42.0 | 0.3 | 2.6 | 17.6 | 20 | 18 | 108 |
| **012** | 400 (3 phase) | 360 | 440 | 8.9 | 52.0 | 0.3 | 2.6 | 23.2 | 30 | 24 | 128 |
| **014** | 400 (3 phase) | 360 | 440 | 10.4 | 73.0 | 0.7 | 5.4 | 29.4 | 35 | 31 | 192 |

LEGEND

**FLA** — Full Load Amps
**HACR** — Heating, Air Conditioning and Refrigeration
**IFM** — Indoor (Evaporator) Fan Motor
**LRA** — Locked Rotor Amps
**MCA** — Minimum Circuit Amps
**MOCP** — Maximum Overcurrent Protection
**NEC** — National Electrical Code (U.S.A.)
**OFM** — Outdoor (Condenser) Fan Motor
**RLA** — Rated Load Amps

*Fuse or HACR circuit breaker.

NOTES:

1. In compliance with NEC requirements (U.S.A. Standard) for multimotor and combination load equipment (refer to NEC Articles 430 and 440), the overcurrent protective device for the unit shall be fuse or HACR breaker.
2. **Unbalanced 3-Phase Supply Voltage**
   *Never operate a motor where a phase imbalance in supply voltage is greater than 2%.* Use the following formula to determine the percent of voltage imbalance.

   % Voltage Imbalance

   $$= 100 \times \frac{\text{max voltage deviation from average voltage}}{\text{average voltage}}$$

Example: Supply voltage is 400-3-50.

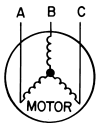


AB = 393 v
BC = 403 v
AC = 396 v

$$\text{Average Voltage} = \frac{393 + 403 + 396}{3}$$

$$= \frac{1192}{3}$$

$$= 397$$

Determine maximum deviation from average voltage.
(AB) 397 – 393 = 4 v
(BC) 403 – 397 = 6 v
(AC) 397 – 396 = 1 v

Maximum deviation is 6 v.

Determine percent of voltage imbalance.

$$\text{\% Voltage Imbalance} = 100 \times \frac{6}{397}$$

$$= 1.5\%$$

This amount of phase imbalance is satisfactory as it is below the maximum allowable 2%.

> IMPORTANT: If the supply voltage phase imbalance is more than 2%, contact your local electric utility company immediately.

Route thermostat cable or equivalent single leads of colored wire from thermostat subbase terminals to low-voltage connections on unit (shown in Fig. 10) as described in Steps 1-4 below.

1. If unit is mounted on roof curb and accessory thru-the-curb service plate connection is used, route wire through connection plate.
2. Pass control wires through the hole provided on unit (see connection D in Connection Sizes table in Fig. 6).
3. Feed wires through the raceway built into the corner post to the 24-v barrier located on the left side of the control box. See Fig. 11. The raceway provides the UL-required (Underwriters' Laboratories) clearance between high- and low-voltage wiring.
4. Connect thermostat wires to screw terminals on low-voltage connection board.

HEAT ANTICIPATOR SETTINGS — Set heat anticipator settings at .14 amp for the first stage and .20 amp for second-stage heating, except for 008 low heat. Set both first and second stage heat anticipator settings for 008 at .14 amp.

## Table 3 — American/European Wire Conversions

| AMERICAN | | EUROPEAN |
|---|---|---|
| Industry Standard Size | American Conversion Size (mm²) | Industry Standard Size (mm²) |
| **18 AWG** | 0.82 | 1.0 |
| **16 AWG** | 1.30 | 1.5 |
| **14 AWG** | 2.08 | 2.5 |
| **12 AWG** | 3.30 | 4.0 |
| **10 AWG** | 5.25 | 6.0 |
| **8 AWG** | 6.36 | 10.0 |
| **6 AWG** | 13.29 | 16.0 |
| **4 AWG** | 21.14 | 25.0 |
| **3 AWG** | 26.65 | — |
| **2 AWG** | 33.61 | 35.0 |
| **1 AWG** | 42.39 | 50.0 |
| **1/0 AWG** | 53.49 | — |
| **2/0 AWG** | 67.42 | 70.0 |
| **3/0 AWG** | 85.00 | 95.0 |
| **4/0 AWG** | 107.19 | 120.0 |
| **250 kcmil** | 126.64 | 150.0 |
| **300 kcmil** | 151.97 | — |
| **350 kcmil** | 177.90 | 185.0 |
| **400 kcmil** | 202.63 | 240.0 |
| **500 kcmil** | 253.29 | 300.0 |
| **600 kcmil** | 303.95 | — |

LEGEND

**AWG** — American Wire Gage
**kcmil** — Thousand Circular Mils

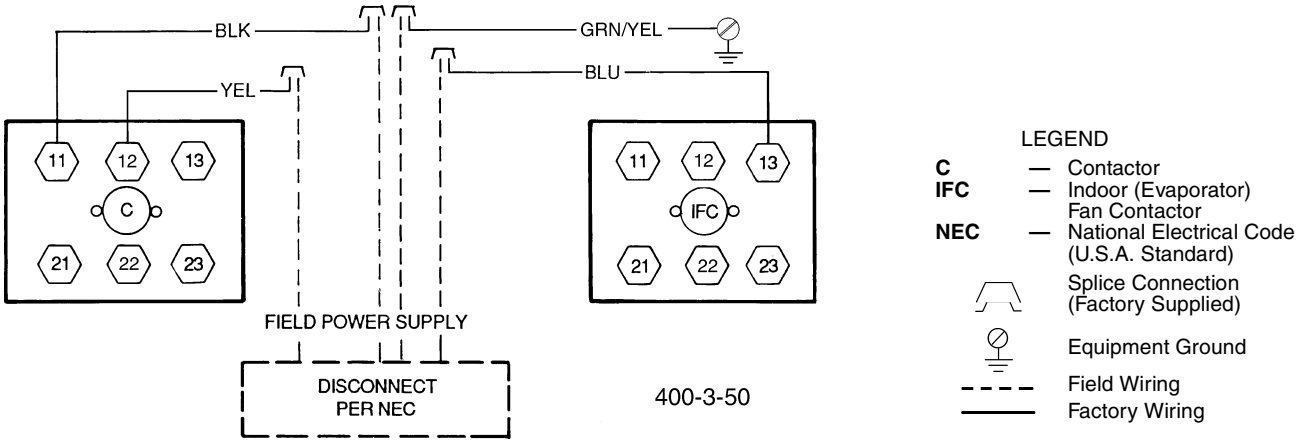


**Fig. 9 — Power Wiring Connections**

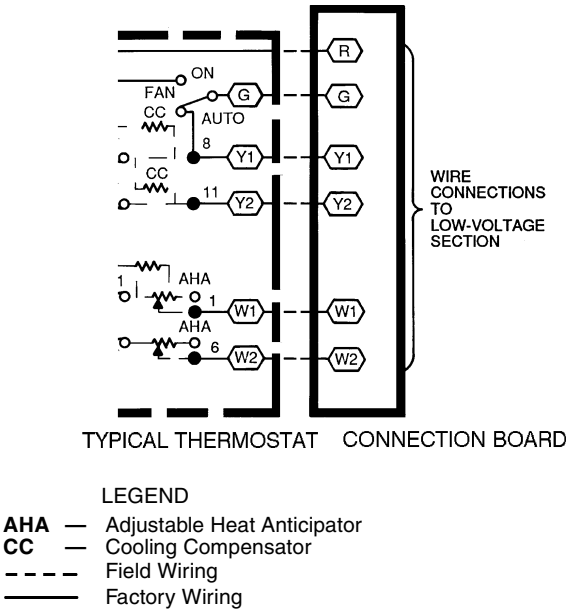


**Fig. 10 — Low-Voltage Connections**

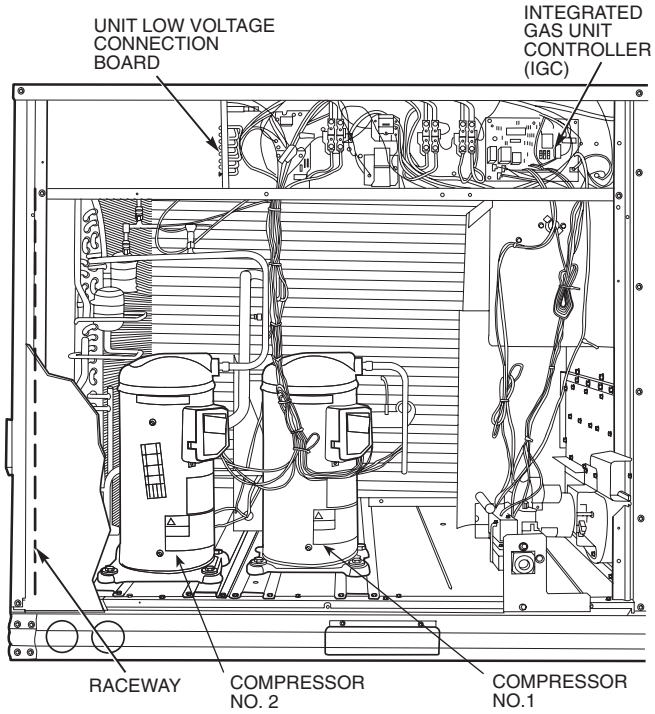


**Fig. 11 — Field Control Wiring Raceway and Compressor Location**

## Step 8 — Adjust Factory-Installed Options

APOLLO CONTROL — The optional Apollo control is used to actively monitor all modes of operation as well as indoor (evaporator) fan status, filter status, and indoor-air quality. The Apollo control is designed to work with Carrier TEMP and VVT® systems.

The thermostat must be wired to the Apollo control before starting the unit. Refer to the Apollo control installation instructions for information on installing the thermostat. See Fig. 12 for Apollo location.

MANUAL OUTDOOR-AIR DAMPER — The outdoor-air hood and screen are attached to the basepan at the bottom of the unit for shipping.

Assembly:

1. Determine quantity of ventilation required for building. Record amount for use in Step 8.
2. Remove and save evaporator coil access panel and screws. See Fig. 13.
3. Separate hood and screen from basepan by removing the screws and brackets securing them. Save all screws and discard brackets.
4. Replace evaporator coil access panel using screws from Step 2.
5. Place hood on front of evaporator coil access panel. See Fig. 14 for hood details. Secure top of hood with the screws removed in Step 3. See Fig. 15.
6. Remove and save 6 screws (3 on each side) from sides of the manual outdoor-air damper. Remove and save 2 manual outdoor-air adjustment screws (one on each side of damper blade).
7. Align screw holes on hood with screw holes on side of manual outdoor-air damper. See Fig. 14 and 15. Secure hood with 6 side screws from Step 6.
8. Adjust minimum position setting of the damper blade by adjusting the 2 manual outdoor-air adjustment screws on the front of the damper blade. See Fig. 13. Slide blade vertically until it is in the appropriate position determined by Fig. 16. Tighten screws.
9. Remove and save screws currently on sides of hood. Insert screens. Secure screens to hood using the screws. See Fig. 15.

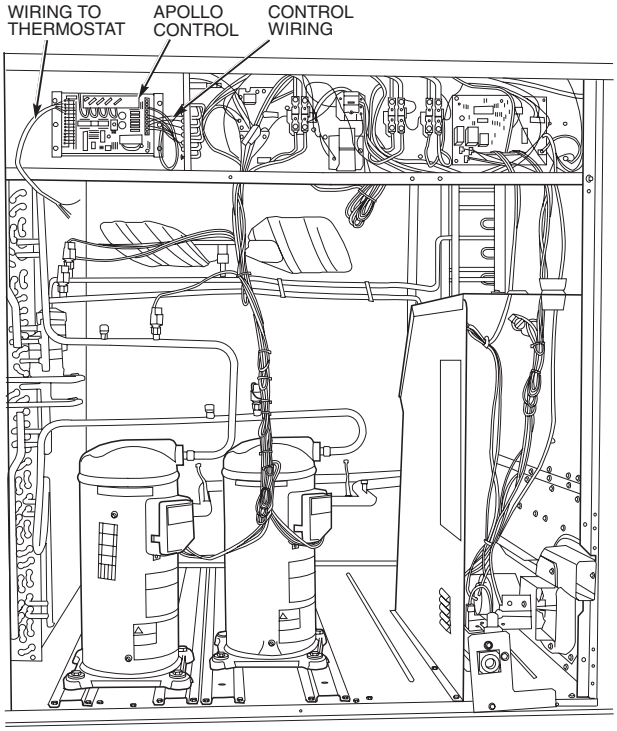


**Fig. 12 — Apollo Control Factory-Installed in Typical Unit**

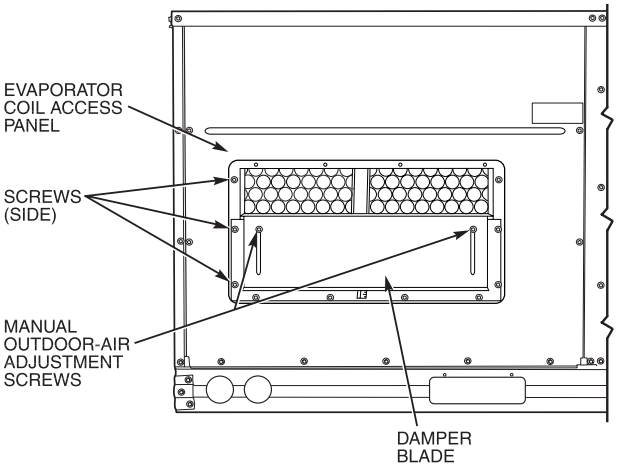


**Fig. 13 — Damper Panel with Manual Outdoor-Air Damper Installed**

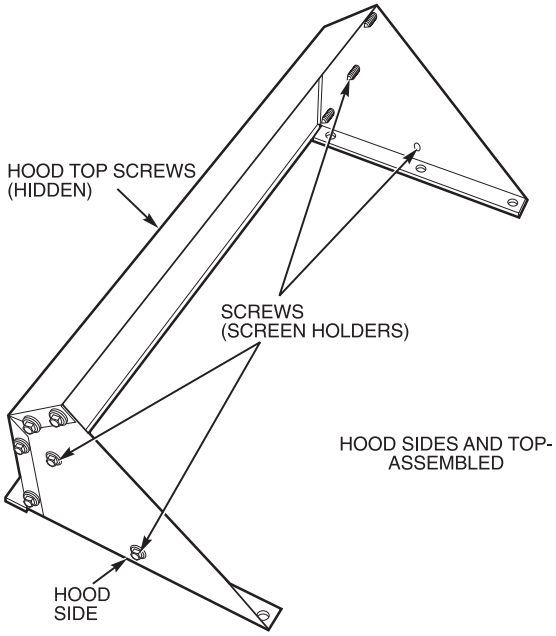


**Fig. 14 — Outdoor-Air Hood Details**

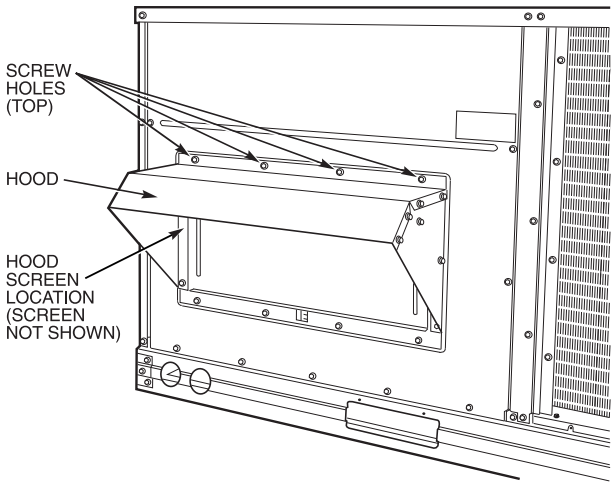


**Fig. 15 — Damper with Hood Attached**

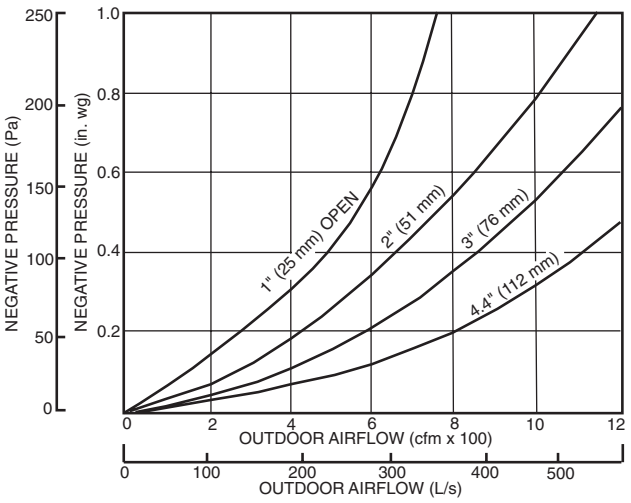


**Fig. 16 — Position Setting**

OPTIONAL DURABLADE ECONOMIZER — The optional economizer hood assembly is packaged and shipped in the filter section. Damper blades and control boards are installed at the factory and the economizer is shipped in the vertical discharge position.

NOTE: Horizontal discharge block-off plate is shipped with the air hood package. If unit is to be used for vertical discharge application, discard this plate.

Assembly

1. Determine if ventilation air is required in building. If so, determine the minimum amount to be supplied by each unit and record quantity of ventilation air needed for use in Step 8.
2. Remove filter access panel by raising panel and swinging panel outward. Panel is now disengaged from track and can be removed. No tools are required to remove filter access panel. Remove outdoor-air opening panel. Save panels and screws. See Fig. 17. Remove optional economizer and outdoor-air damper hood package from filter section.
3. Assemble outdoor-air hood top and side plates as shown in Fig. 18. Install seal strips on hood top and sides. Put aside screen retainer and retainer screw for later assembly. *Do not attach hood to unit at this time.*
4. On 012 and 014 units, install vertical discharge block-off plate on right side over return air duct opening. See Fig. 19.
5. a. Slide economizer into unit and secure with screws. See Fig. 20.

NOTE: Be sure to engage rear economizer flange under tabs at rear of vertical return-air opening.

   b. Remove screw and discard from barometric relief damper. See Fig. 20.
6. To convert to horizontal discharge application:
   a. Rotate the economizer 90 degrees until the economizer motor faces the condenser section (see Fig. 21).
   b. Rotate the barometric relief damper hinge 90 degrees. Barometric relief damper should open vertically to operate properly.
   c. Install horizontal discharge block-off plate over the opening on the access panel. (Block-off plate MUST be installed before installing hood assembly.) See Fig. 22.
7. Insert economizer plug into economizer harness. Remove tape from barometric relief damper. See Fig. 20.
8. If ventilation air is not required, proceed to Step 9. If ventilation air is required, determine the minimum position setting for required airflow. See Fig. 23. Adjust minimum position setting by loosening the screws on the position setting bracket. See Fig. 24. Slide bracket until the top screw is in the position determined by Fig. 23. Tighten screws.
9. Remove tape from outdoor-air thermostat (OAT). Fasten OAT to inside of hood using screws and speed clips provided. See Fig. 25. Make sure OAT terminals are positioned up.
10. Replace outdoor-air opening panel using screws from Step 2. Replace filter access panel. Ensure the filter access panel slides along the tracks and is securely engaged.
11. Fasten hood top and side plate assembly to outdoor-air opening panel with screws provided.
12. Place knob supplied with economizer on OAT. See Fig. 25. Set OAT for 1.7° C (3° F) below indoor room thermostat setting. If accessory enthalpy control (EC) is used in place of OAT, see instructions shipped with EC for installation and adjustment. See Fig. 25.
13. Connect OAT per Fig. 26.
14. Slide outdoor-air inlet screens into screen track on hood side plate. While holding screens in place, fasten screen retainer to hood using screws provided.

NOTE: Refer to Fig. 27 for Durablade economizer barometric relief damper characteristics.

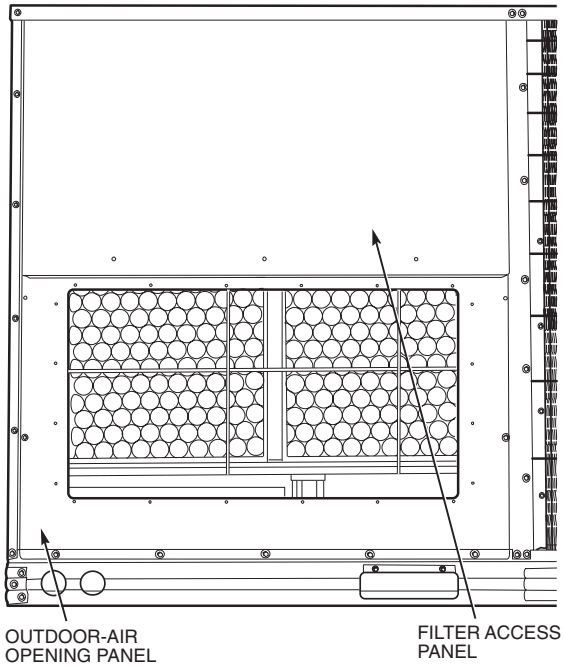


**Fig. 17 — Access Panel Locations**

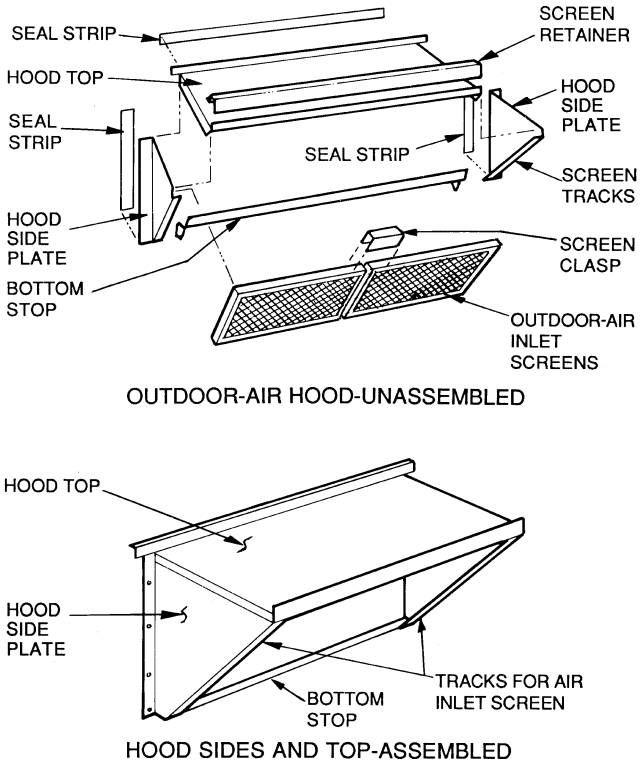


**Fig. 18 — Outdoor-Air Hood Details**

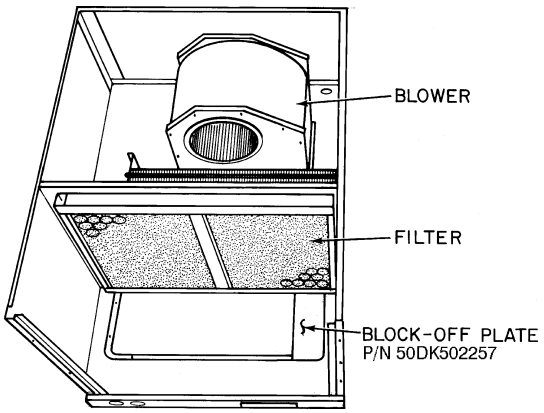


**Fig. 19 — Vertical Discharge Block-Off Plate (48TF012, 014 Units Only)**

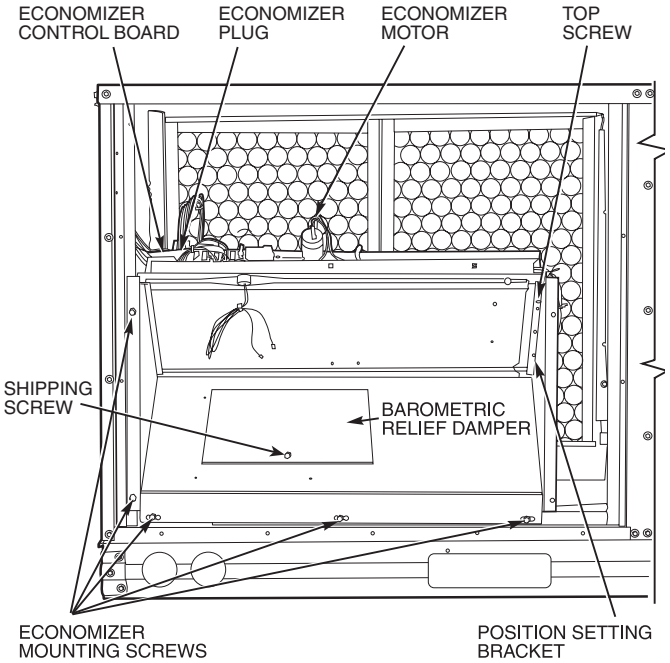


**Fig. 20 — Durablade Economizer Installed in Unit**

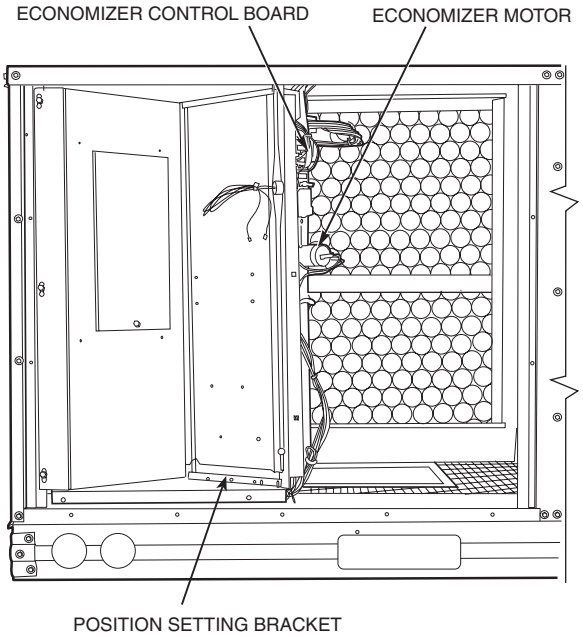


**Fig. 21 — Horizontal Durablade Economizer Installation (90 Degree Rotation)**

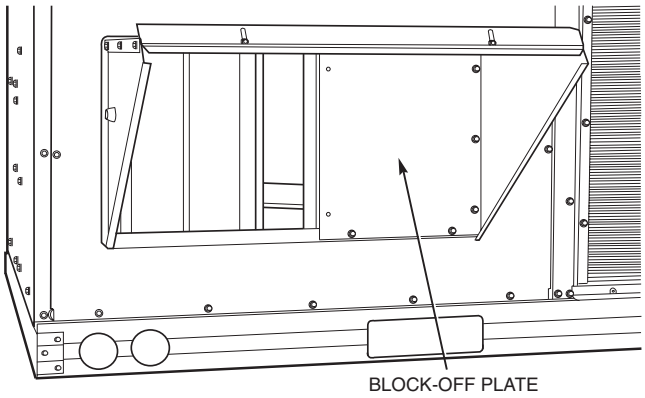


**Fig. 22 — Horizontal Discharge Block-Off Plate**

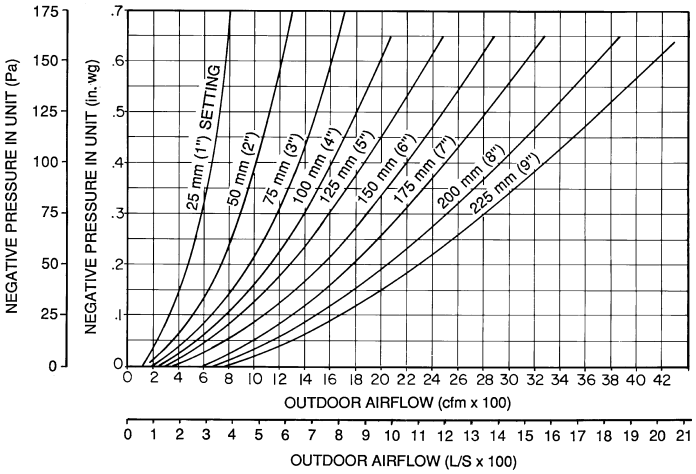


Example:
Given —
Negative Pressure . . . . . 25 Pa (0.1 in. wg)
Outdoor Airflow . . .. . . . . 520 L/s (1100 cfm)
Determine —
Setting = 150 mm (6 in.)

**Fig. 23 — Durablade Economizer Damper Minimum Position Setting**

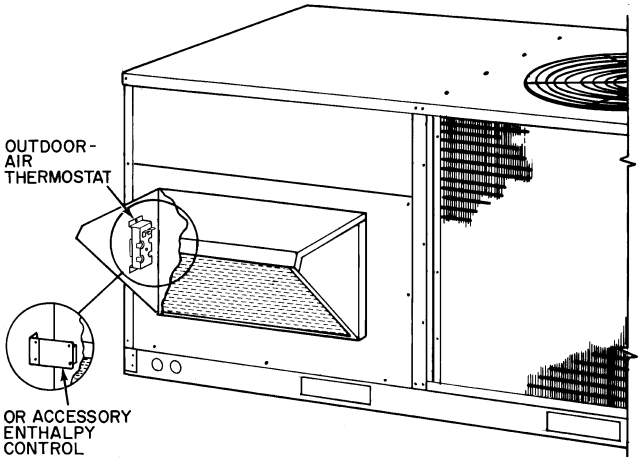


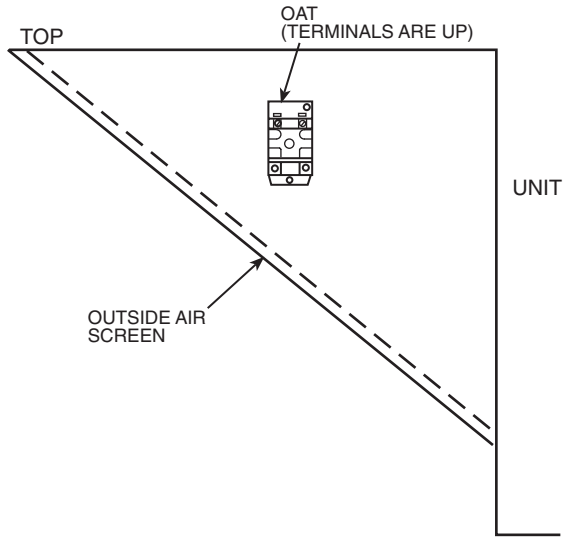


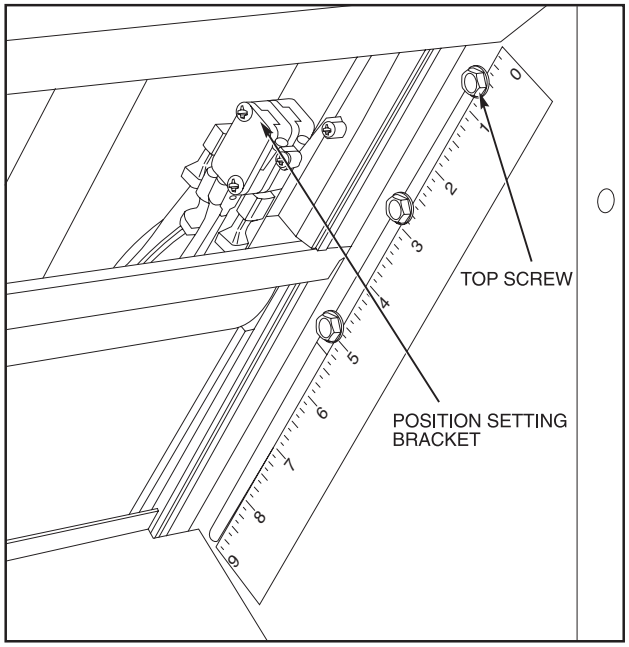


**Fig. 24 — Durablade Economizer Minimum Position Damper Setting**

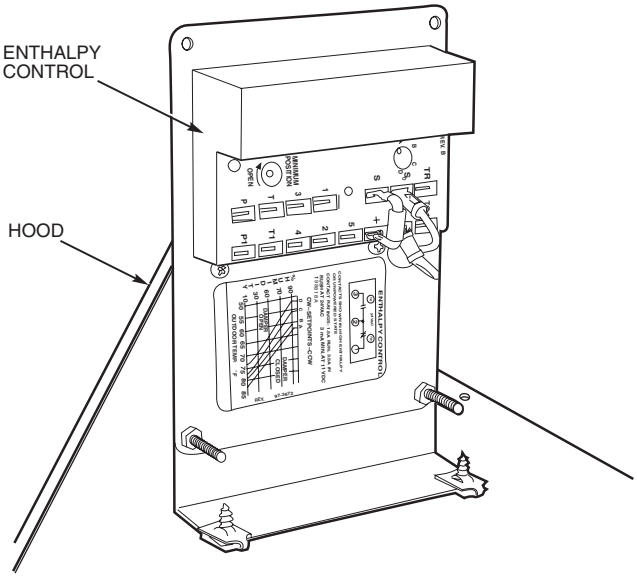


**Fig. 25 — Outdoor-Air Thermostat/ Enthalpy Control Installation**

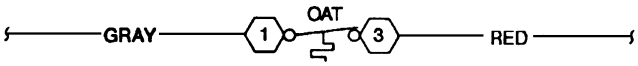


**Fig. 26 — Wiring Connections for Outdoor-Air Thermostat**

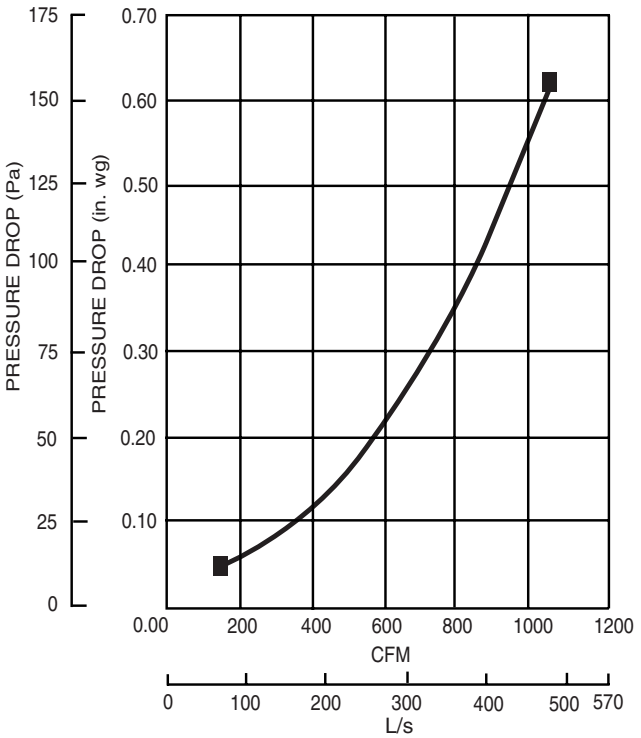


**Fig. 27 — Durablade Economizer Barometric Relief Damper Characteristics**

OPTIONAL ECONOMI$ER — See Fig. 28 for EconoMi$er component locations.

1. To remove the existing unit filter access panel, raise the panel and swing the bottom outward. The panel is now disengaged from the track and can be removed. Remove the indoor coil access panel and discard. See Fig. 29.

NOTE: If installing an optional Power Exhaust Assembly, refer to the EconoMi$er Power Exhaust Installation Instructions, then proceed to Step 6. Controller should be mounted in vertical position as shown in Fig. 28.

2. To assemble the hood assembly remove the EconoMi$er hood from its packaging. Locate the outdoor air opening panel. See Fig. 30.
3. Install the 19 mm x 19 mm ($^3/_4$ x $^3/_4$-in.) seal strip on the exhaust air hood top panel. Install the 3 mm x 22 mm ($^1/_8$ x $^7/_8$-in.) seal strip on the exhaust air hood side panels and bottom brackets. Assemble the exhaust air hood to the outdoor air opening panel as shown in Fig. 30, using the screws provided. *Do not attach hood assembly to unit at this time.*
4. Install the 3 mm x 22 mm ($^1/_8$ x $^7/_8$-in. seal strip on the outdoor air hood top and side panels. Assemble the outdoor air hood to the outdoor air opening panel as shown in Fig. 31, using the screws provided. *Do not attach completed hood (Fig. 32) assembly to the unit at this time.*

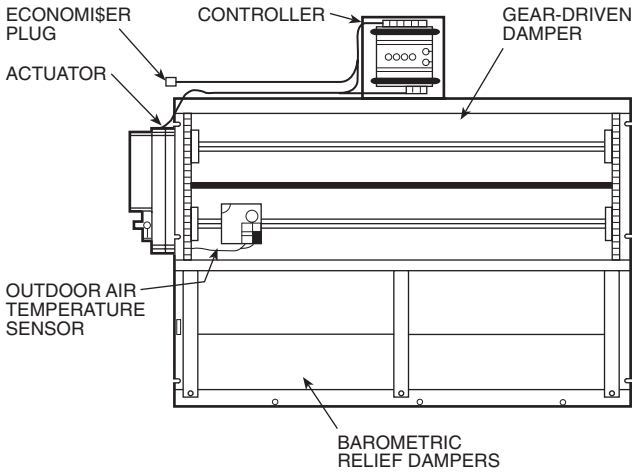


**Fig. 28 — EconoMi$er Component Locations**

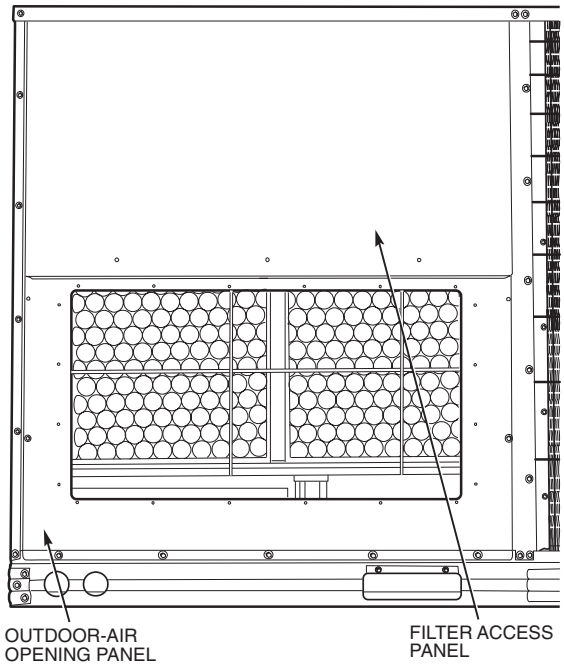


**Fig. 29 — Typical Access Panel Locations**

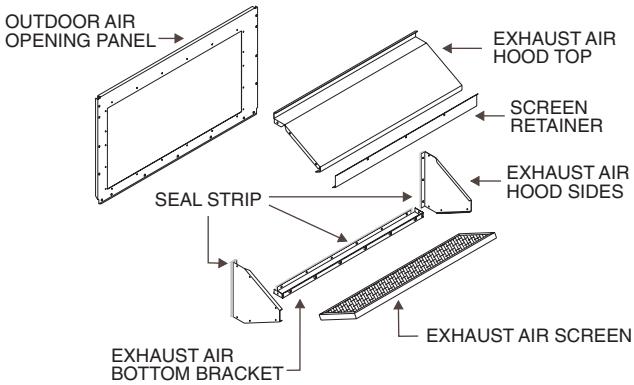


**Fig. 30 — Exhaust Air Hood Assembly**

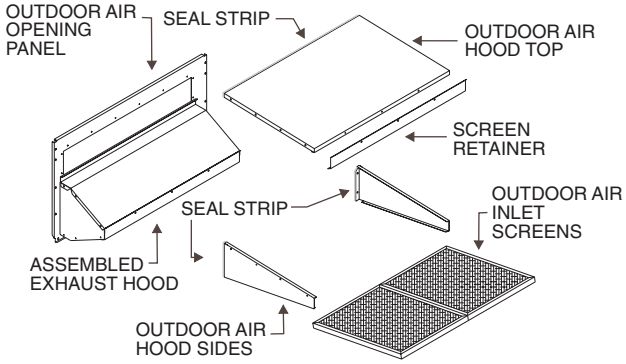


**Fig. 31 — Outdoor Air Hood Assembly**

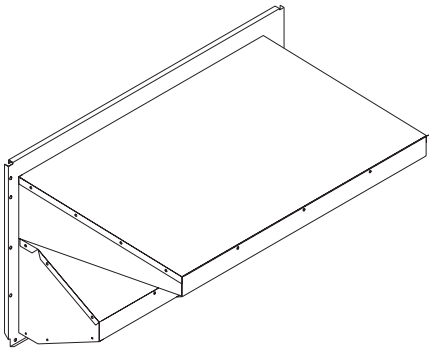

**Fig. 32 — Completed Hood Assembly**

5. Slide the outdoor air inlet screens into the screen track on the hood side panels. While holding the screens in place, fasten the screen retainer to the hood using the screws provided. Repeat the process for the barometric exhaust air screen. *Do not attach hood assembly to unit at this time.*
6. For 48TF014 units, install the return air block-off plate over the return air duct opening. See Fig. 33.

NOTE: For 48TF008 and 012 units, remove the factory-installed block-off plate. See Fig. 33.

7. Slide the EconoMi$er assembly into the rooftop unit. See Fig. 34 and 35.

NOTE: Be sure to engage rear EconoMi$er flange under tabs in return air opening of the unit base. See Fig. 34.

8. Install the outdoor air block-off plate, then secure the EconoMi$er with the screws provided. See Fig. 35.
9. Remove and store the 12-pin jumper plug from the unit wiring harness located in the upper left corner and insert the EconoMi$er plug into the unit wiring harness. Refer to wiring diagram Fig. 36 and 37. Also refer to Fig. 38 if installing an accessory power exhaust.
10. Install the complete hood assembly on the unit and secure using the screws provided.
11. Remove the indoor fan motor access panel.
12. Mount the supply air temperature sensor to the lower left portion of the indoor blower housing with the two (2) screws provided (see Fig. 39). Connect the violet and pink wires to the corresponding connections on the supply air temperature sensor. Replace the indoor fan motor access panel.

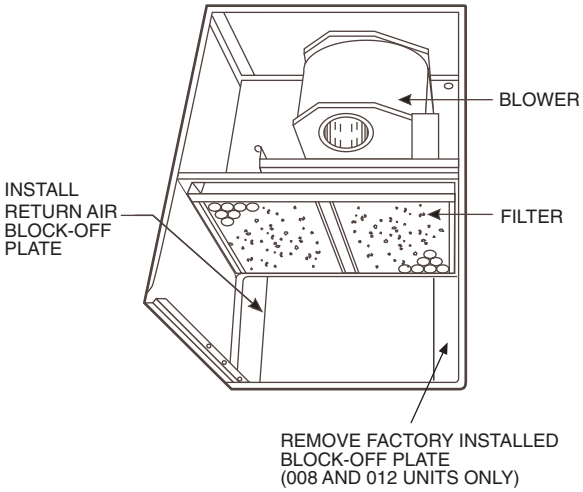


**Fig. 33 — Return Air Block-Off Plate Installation (48TF014 Units Only)**

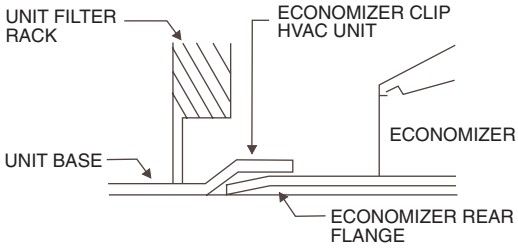


**Fig. 34 — Rear EconoMi$er Flange Installation**

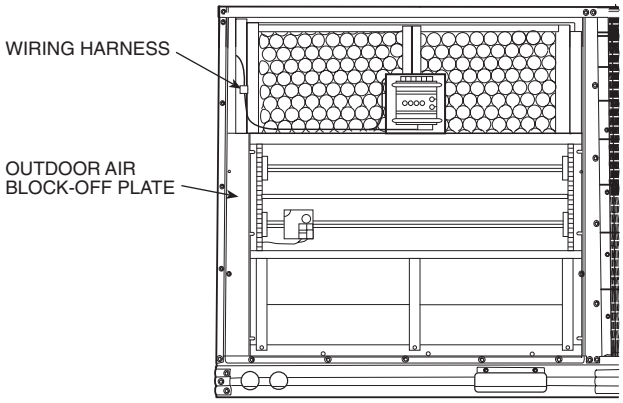


**Fig. 35 — EconoMi$er Installed in 48TF008 and 012 Units**

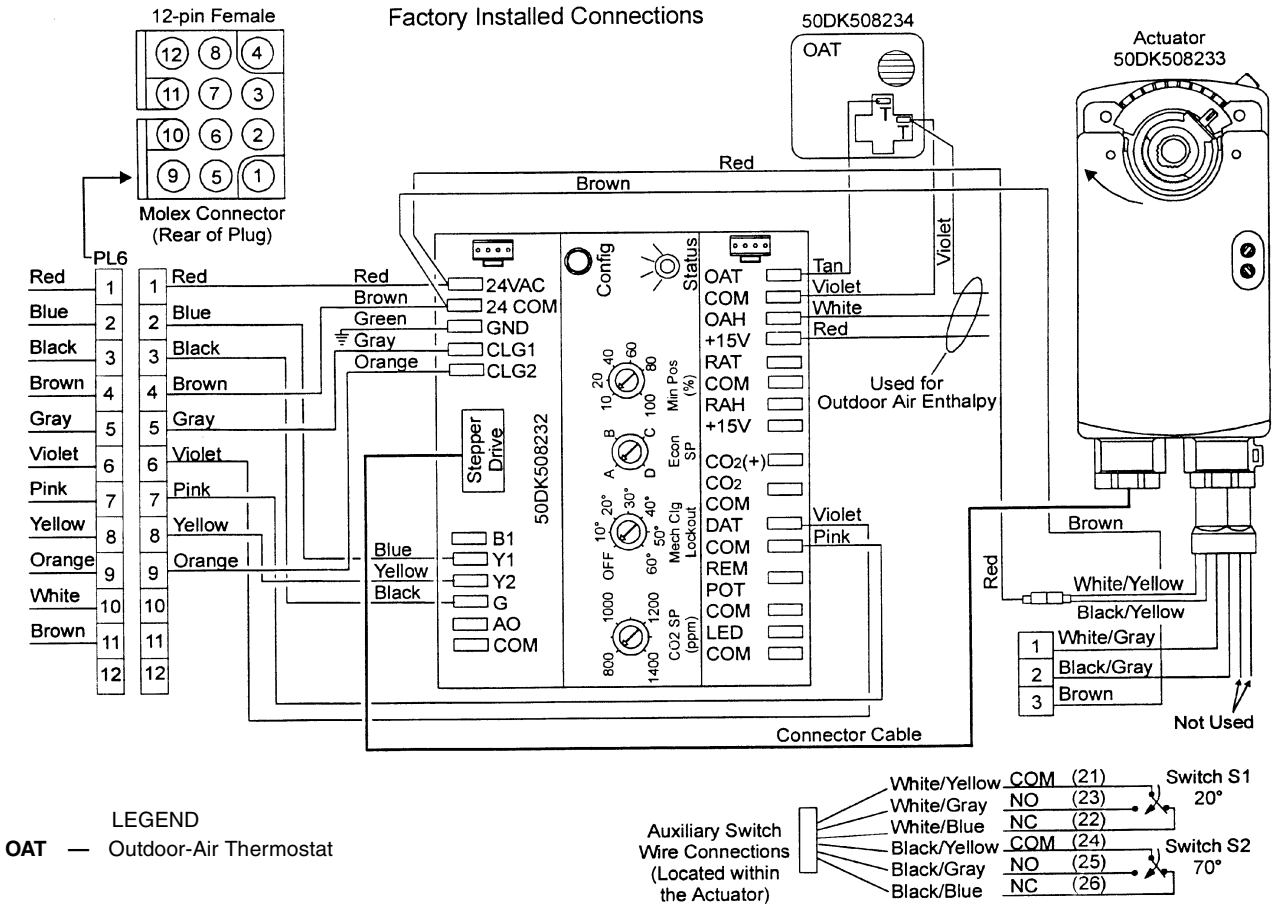


**Fig. 36 — EconoMi$er Wiring**

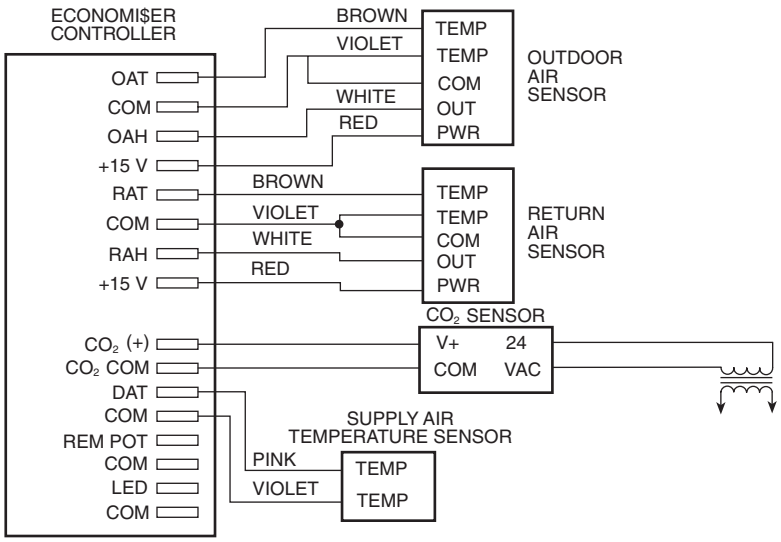


**Fig. 37 — EconoMi$er Sensor Wiring**

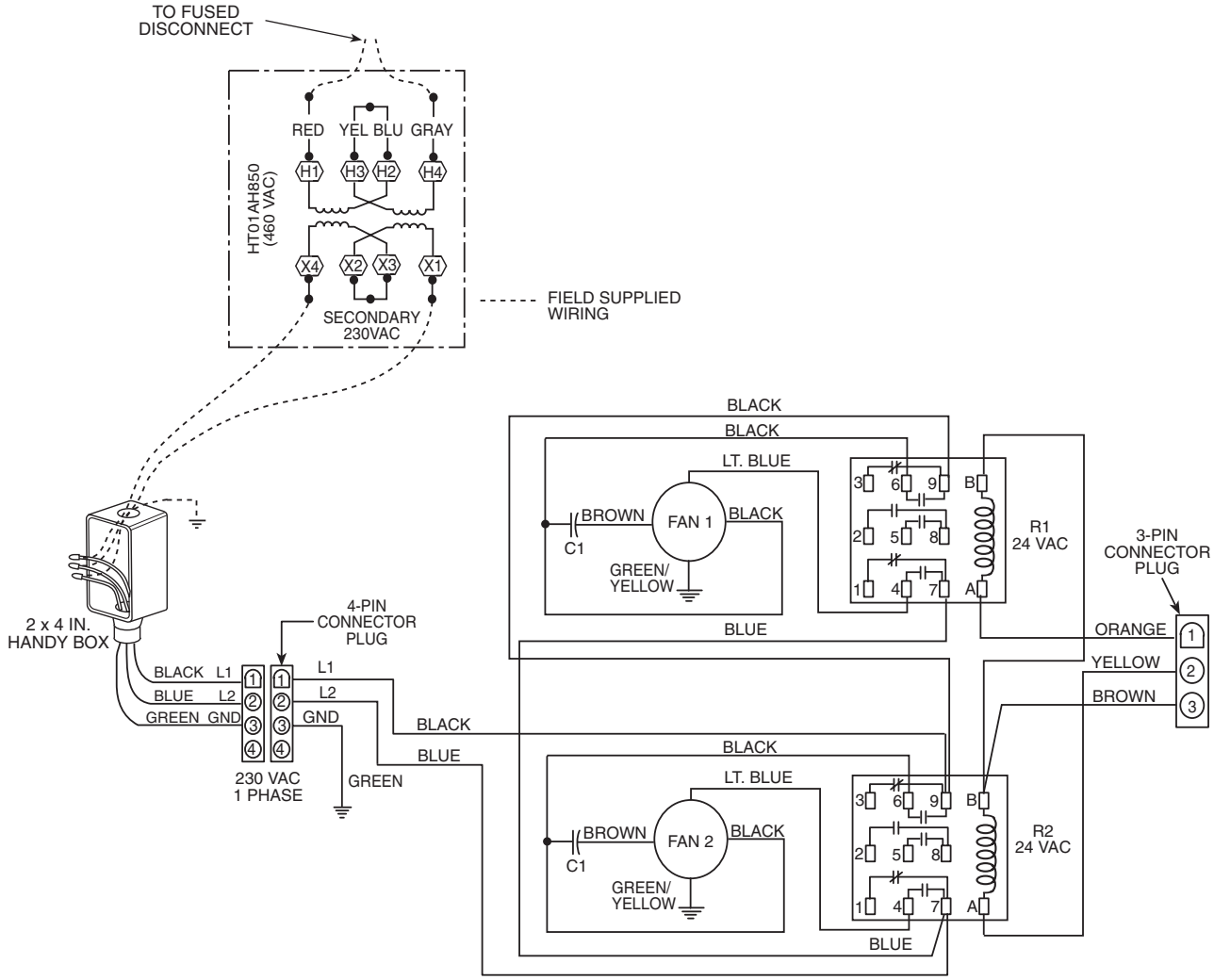


**Fig. 38 — Wiring Diagram for Power Exhaust System**

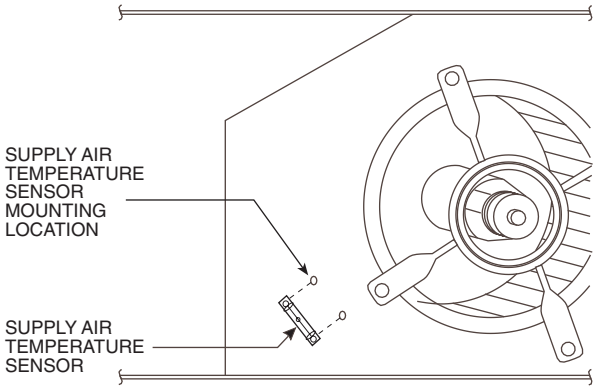


**Fig. 39 — Supply Air Sensor Placement**

$CO_2$ Control Set Up — If a $CO_2$ sensor is not being used, proceed to the next section. If a $CO_2$ sensor is being used, perform the following:

1. Determine the value at which you want the minimum position of the dampers to begin opening to allow a greater amount of outdoor air to enter. The range is 800 to 1,400 ppm.
2. Locate the $CO_2$ SP (PPM) potentiometer and adjust to the desired set point. See Fig. 40.

Mechanical Cooling Lockout — Determine the outdoor-air temperature at which you want the mechanical cooling (compressors) to be disabled. Locate the mechanical cooling lockout (MECH CLG LOCKOUT) potentiometer. To disable this feature, turn the potentiometer counterclockwise (CCW) to the OFF position. Otherwise, set the value between –12 and 15 C (10 and 60 F). Mechanical cooling will not operate when the outdoor air temperature is below this value. See Fig. 40.

Dry Bulb Changeover Set Up — Determine the dry bulb changeover set point from Table 4. The settings are A, B, C and D. Locate the ECON SP potentiometer and set the dry bulb changeover set point. See Fig. 40. When the OAT is above this set point, the damper is limited to minimum position setting.

**Table 4 — Changeover Set Points**

| SETTINGS | A | B | C | D |
|---|---|---|---|---|
| Dry Bulb C (°F) | 23 (73) | 21 (69) | 19 (66) | 17 (63) |
| Single Enthalpy* KJ/Kg (Btu/lb) | 63 (27) | 58 (25) | 56 (24) | 51 (22) |
| Differential Temperature* C (°F, Not Adjustable) | 1.1 (2) | 1.1 (2) | 1.1 (2) | 1.1 (2) |
| Differential Enthalpy* KJ/Kg (Btu/lb, Not Adjustable) | 2 (1) | 2 (1) | 2 (1) | 2 (1) |

*Field-installed accessory.

If a potentiometer fails, its setting will default to the values in Table 5.

**Table 5 — Default Potentiometer Settings**

| POTENTIOMETER | DEFAULT SETTING |
|---|---|
| $CO_2$ SP (PPM) | 1,000 |
| MECH CLG LOCKOUT, C (F) | 8.3 (47) |
| ECON SP | D |
| MIN POS (%) | 20 |

Ventilation Air (Minimum Position Set Up) — If ventilation air is not required, proceed to Step 5. If ventilation air is required, perform the following:

1. The indoor fan must be on to set the ventilation air. Either put the thermostat in the continuous fan mode or jumper the R and G terminals at the rooftop unit connection board.
2. Locate the minimum position (MIN POS) potentiometer. Turn the potentiometer full CCW to fully close the outdoor air dampers. Turn the potentiometer gradually clockwise (CW) to the desired position. See Fig. 40.
3. Replace the filter access panel. See Fig. 21. Ensure the filter access panel slides along the tracks and is securely engaged.
4. Calculate the minimum airflow across the EconoMi$er.
   a. Calculate % of outside air using the following formula.
      % Outdoor air through EconoMi$er
      $$\%\ \text{Outdoor air} = \frac{\text{Mixture Temp} - \text{Return Air Temp}}{\text{Outdoor Temp} - \text{Return Air Temp}}$$
   b. Multiply total CFM by percentage outdoor air, this gives outdoor air volume in CFM.
5. Turn on base unit power.
   NOTE: The EconoMi$er begins operation three minutes after power up.

**⚠ WARNING**

**Personal Injury Hazard.** Avoid possible injury by keeping fingers away from damper blades.

6. See Fig. 41 for barometric relief damper characteristics.

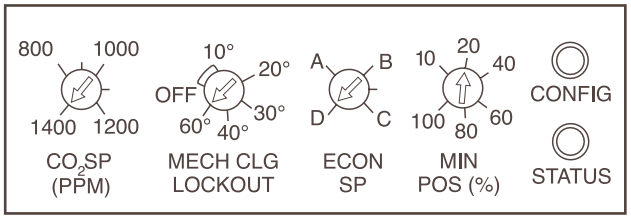


**Fig. 40 — EconoMi$er Control Adjustment Potentiometers (Factory Settings)**

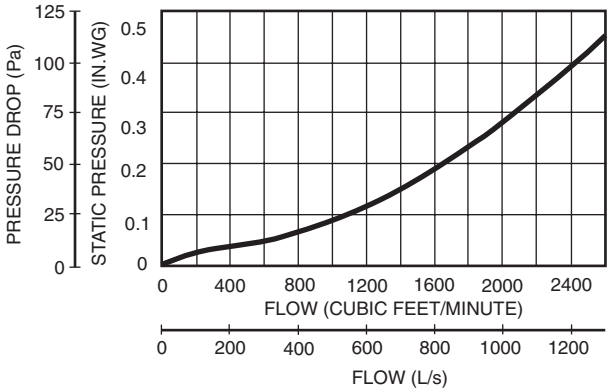


**Fig. 41 — EconoMi$er Barometric Relief Capacity**

**Step 9 — Adjust Evaporator-Fan Speed —** Adjust evaporator-fan speed to meet jobsite requirement.

Table 6 shows motor performance. Tables 7 and 8 show fan rpm at motor pulley settings, Table 9 shows motor efficiencies and Tables 10 and 11 give accessory static pressure drops. Refer to Tables 12-23 to determine fan speed settings. Fan motor pulleys are factory set for speed shown in Table 1A or 1B.

To change fan speed:

1. Shut off unit power supply and install lockout tag.
2. Loosen belt by loosening fan motor mounting plate nuts (see Fig. 42 and 43).
3. Loosen movable pulley flange setscrew (see Fig. 44).
4. Screw movable flange toward fixed flange to increase fan speed and away from fixed flange to decrease fan speed. Increasing fan speed increases load on motor. Do not exceed maximum speed specified in Table 1A or 1B.
5. Set movable flange at nearest flat of pulley hub and tighten setscrew (see Table 1A or 1B for speed change for each full turn of pulley flange).

To align fan and motor pulleys:

1. Loosen fan pulley setscrews.
2. Slide fan pulley along fan shaft.
3. Make angular alignment by loosening motor from mounting plate.

To adjust belt tension (see Fig. 42 and 43):

1. Loosen fan motor mounting nuts.
2. *Size 008* — Slide motor mounting plate away from fan scroll for proper belt tension (13 mm [$^1/_2$-in.] deflection with 3.6 to 4.5 kg [8 to 10 lbs] of force) and tighten mounting nuts. See Fig. 42.

   *Sizes 012,014* — Slide motor mounting plate downward to tighten belt tension (13 mm [$^1/_2$-in.] deflection with 2.3 to 4.5 kg [5 to 10 lbs] of force) and tighten mounting nuts. See Fig. 43.
3. Adjust bolt and nut on mounting plate to secure motor in fixed position. See Fig. 44.

Realign fan and motor pulleys:

1. Loosen fan pulley setscrews.
2. Slide fan pulley along fan shaft.
3. Make angular alignment by loosening motor from mounting plate.

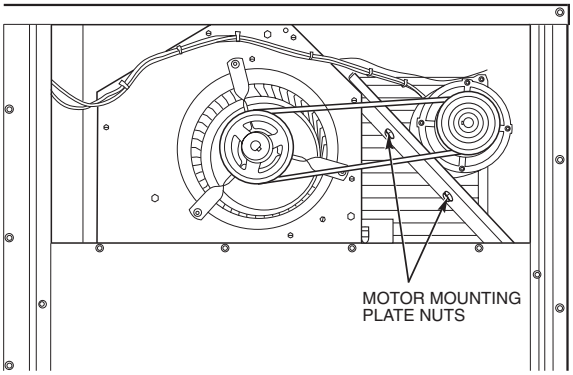


**Fig. 42 — Typical Belt-Drive Motor Mounting for Size 008**

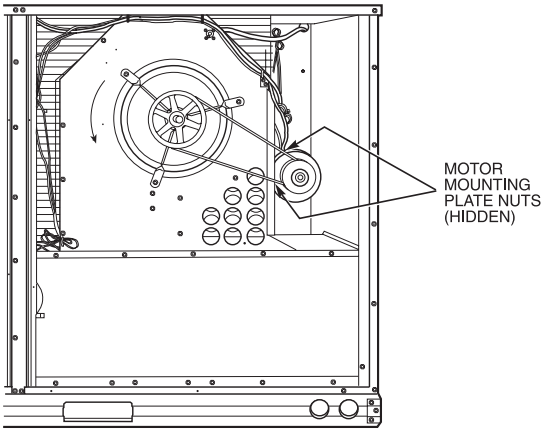


**Fig. 43 — Typical Belt-Drive Motor Mounting for Sizes 012,014**

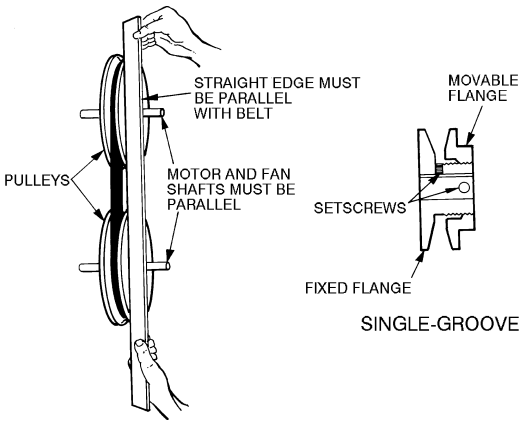


**Fig. 44 — Evaporator-Fan Pulley Adjustment**

**Table 6 — Evaporator-Fan Motor Performance**

| UNIT 48TF | UNIT RATED VOLTAGE | MAXIMUM ACCEPTABLE CONTINUOUS BkW* | MAXIMUM ACCEPTABLE CONTINUOUS BHP* | MAXIMUM ACCEPTABLE OPERATING WATTS | MAXIMUM AMP DRAW |
|---|---|---|---|---|---|
| **008** | 400 | 2.76 | 2.90 | 2615 | 3.6 |
| **012** | 400 | 2.76 | 3.70 | 3313 | 5.0 |
| **014** | 400 | 2.76 | 3.70 | 3313 | 5.0 |

LEGEND

**BHP** — Brake Horsepower
**BkW** — kW x Motor Efficiency

*Extensive motor and electrical testing on these units ensures that the full range of the motors can be utilized with confidence. Using your fan motors up to the ratings shown in this table will not result in nuisance tripping or premature motor failure. Unit warranty will not be affected.

## Table 7 — Fan R/s at Motor Pulley Settings (SI)

| UNIT 48TF | MOTOR PULLEY TURNS OPEN | | | | | | | | | | |
|---|---|---|---|---|---|---|---|---|---|---|---|
| | 0 | 1/2 | 1 | 1 1/2 | 2 | 2 1/2 | 3 | 3 1/2 | 4 | 4 1/2 | 5 |
| **008** | 11.70 | 11.35 | 11.00 | 10.65 | 10.30 | 9.95 | 9.60 | 9.25 | 8.90 | 8.55 | 8.20 |
| **012** | 13.00 | 12.65 | 12.30 | 11.95 | 11.60 | 11.25 | 10.90 | 10.55 | 10.20 | 9.85 | 9.50 |
| **014** | 15.00 | 14.70 | 14.40 | 14.10 | 13.80 | 13.50 | 13.20 | 12.90 | 12.60 | 12.30 | 12.00 |

## Table 8 — Fan Rpm at Motor Pulley Settings (English)

| UNIT 48TF | MOTOR PULLEY TURNS OPEN | | | | | | | | | | |
|---|---|---|---|---|---|---|---|---|---|---|---|
| | 0 | 1/2 | 1 | 1 1/2 | 2 | 2 1/2 | 3 | 3 1/2 | 4 | 4 1/2 | 5 |
| **008** | 700 | 681 | 660 | 639 | 618 | 597 | 576 | 555 | 534 | 513 | 492 |
| **012** | 779 | 760 | 739 | 718 | 697 | 676 | 655 | 634 | 613 | 592 | 571 |
| **014** | 900 | 883 | 865 | 843 | 825 | 807 | 789 | 771 | 753 | 735 | 717 |

## Table 9 — Evaporator-Fan Motor Efficiency

| MOTOR 48TF | EFFICIENCY (%) |
|---|---|
| **D/E/F008** | 80 |
| **D/E/F012** | 80 |
| **D/E014** | 85 |

NOTE: Convert watts to bhp using the following formula:

$$\text{bhp} = \frac{\text{watts input x motor efficiency}}{746}$$

## Table 10 — Accessory/FIOP Static Pressure Drop (Pa) — 48TF008-014

| UNIT 48TF | RATED VOLTAGE | L/s | DURABLADE ECONOMIZER PRESSURE DROP | ECONOMI$ER |
|---|---|---|---|---|
| **008-014** | All | 1100 | 5 | — |
| | | 1200 | 6 | — |
| | | 1300 | 7 | — |
| | | 1400 | 8 | 31 |
| | | 1500 | 9 | 35 |
| | | 1600 | 10 | 41 |
| | | 1700 | 11 | 50 |
| | | 1800 | 12 | 59 |
| | | 1900 | 13 | 67 |
| | | 2000 | 14 | 75 |
| | | 2100 | 15 | 84 |
| | | 2200 | 16 | 90 |
| | | 2300 | 17 | 97 |

**FIOP —** Factory-Installed Option

## Table 11 — Accessory/FIOP Static Pressure Drop (in. wg) — 48TF008-014

| UNIT 48TF | RATED VOLTAGE | CFM | DURABLADE ECONOMIZER PRESSURE DROP | ECONOMI$ER |
|---|---|---|---|---|
| **008-014** | All | 2200 | .02 | .07 |
| | | 2500 | .02 | .09 |
| | | 3000 | .03 | .13 |
| | | 3500 | .04 | .18 |
| | | 4000 | .05 | .23 |
| | | 4500 | .06 | .30 |
| | | 5000 | .07 | .36 |
| | | 5500 | .08 | — |
| | | 6000 | .09 | — |

**FIOP —** Factory-Installed Option

## Table 12 — Fan Performance, 48TF008 — Vertical Discharge Units (SI)

| AIRFLOW (L/s) | EXTERNAL STATIC PRESSURE (Pa) | | | | | | | |
|---|---|---|---|---|---|---|---|---|
| | 50 | | 100 | | 150 | | 200 | |
| | R/s | BkW | R/s | BkW | R/s | BkW | R/s | BkW |
| **1150** | 8.8 | 0.45 | 10.1 | 0.62 | 11.2 | 0.79 | **12.2** | **0.96** |
| **1200** | 9.0 | 0.47 | 10.3 | 0.65 | 11.4 | 0.82 | **12.4** | **1.02** |
| **1275** | 9.3 | 0.53 | 10.5 | 0.70 | 11.6 | 0.89 | **12.6** | **1.08** |
| **1300** | 9.6 | 0.58 | 10.8 | 0.78 | **11.9** | **0.96** | **12.8** | **1.17** |
| **1400** | 9.9 | 0.63 | 11.1 | 0.85 | **12.1** | **1.02** | **13.1** | **1.26** |
| **1450** | 10.1 | 0.68 | 11.3 | 0.86 | **12.3** | **1.09** | **13.2** | **1.29** |
| **1500** | 10.4 | 0.78 | 11.5 | 0.96 | **12.6** | **1.18** | **13.5** | **1.38** |
| **1550** | 10.7 | 0.81 | **11.8** | **1.06** | **12.8** | **1.25** | **13.7** | **1.48** |
| **1600** | 11.0 | 0.90 | **12.0** | **1.10** | **13.0** | **1.35** | **14.0** | **1.56** |
| **1650** | 11.3 | 0.99 | **12.4** | **1.22** | **13.3** | **1.43** | **14.2** | **1.67** |
| **1700** | 11.5 | 1.06 | **12.6** | **1.30** | **13.6** | **1.54** | **14.4** | **1.78** |
| **1750** | **11.8** | **1.16** | **12.9** | **1.38** | **13.8** | **1.65** | 14.7 | 1.88 |
| **1800** | **12.2** | **1.24** | **13.2** | **1.49** | **14.1** | **1.75** | 14.9 | 2.00 |
| **1850** | **12.4** | **1.35** | **13.4** | **1.60** | 14.4 | 1.84 | 15.1 | 2.10 |
| **1900** | **12.8** | **1.47** | **13.7** | **1.70** | 14.6 | 1.97 | 15.4 | 2.24 |

| AIRFLOW (L/s) | EXTERNAL STATIC PRESSURE (Pa) | | | | | | | |
|---|---|---|---|---|---|---|---|---|
| | 250 | | 300 | | 350 | | 400 | |
| | R/s | BkW | R/s | BkW | R/s | BkW | R/s | BkW |
| **1150** | **13.2** | **1.15** | **14.1** | **1.39** | **15.1** | **1.73** | 15.8 | 1.96 |
| **1200** | **13.3** | **1.21** | **14.1** | **1.41** | **15.2** | **1.76** | 15.9 | 2.00 |
| **1275** | **13.5** | **1.28** | **14.3** | **1.46** | **15.3** | **1.76** | 16.1 | 2.17 |
| **1300** | **13.8** | **1.37** | **14.6** | **1.55** | **15.2** | **1.72** | 16.3 | 2.17 |
| **1400** | **14.0** | **1.45** | **14.7** | **1.65** | 15.5 | 1.84 | 16.5 | 2.10 |
| **1450** | **14.1** | **1.53** | **14.9** | **1.73** | 15.6 | 1.88 | 16.7 | 2.10 |
| **1500** | **14.4** | **1.61** | 15.2 | 1.84 | 15.8 | 2.04 | 16.4 | 2.18 |
| **1550** | **14.5** | **1.72** | 15.4 | 1.95 | 16.1 | 2.15 | 16.5 | 2.34 |
| **1600** | 14.8 | 1.80 | 15.6 | 2.07 | 16.3 | 2.29 | 17.0 | 2.49 |
| **1650** | 15.0 | 1.92 | 15.8 | 2.15 | 16.6 | 2.42 | 17.2 | 2.66 |
| **1700** | 15.2 | 2.01 | 16.0 | 2.27 | 16.7 | 2.56 | 17.5 | 2.80 |
| **1750** | 15.5 | 2.14 | 16.2 | 2.41 | 16.9 | 2.65 | 17.6 | 2.92 |
| **1800** | 15.7 | 2.24 | 16.4 | 2.52 | 17.2 | 2.82 | — | — |
| **1850** | 15.9 | 2.37 | 16.7 | 2.66 | 17.4 | 2.92 | — | — |
| **1900** | 16.2 | 2.51 | 16.9 | 2.78 | — | — | — | — |

LEGEND

**BkW** — Fan Input kW x Motor Efficiency
**R/s** — Revolutions Per Second of Blower Wheel

NOTES:
1. **Boldface** indicates field-supplied drive required. (See Note 5.)
2. ▒ indicates field-supplied motor and drive are required.
3. Values include losses for filters, unit casing, and wet coils.
4. Use of a field-supplied motor may affect wire sizing. Contact your Carrier representative to verify.
5. Standard drive range is 8.2 to 11.7 r/s. All other speeds require a field-supplied drive.
6. Maximum continuous BkW is 1.79. Extensive motor and electrical testing on these units ensures that the full range of the motor can be utilized with confidence. Using the fan motors up to the ratings shown will not result in nuisance tripping or premature motor failure. Unit warranty will not be affected.
7. Interpolation is permissible. Do not extrapolate.

## Table 13 — Fan Performance, 48TF012 — Vertical Discharge Units (SI)

| AIRFLOW (L/s) | EXTERNAL STATIC PRESSURE (Pa) | | | | | | | | | |
|---|---|---|---|---|---|---|---|---|---|---|
| | 50 | | 100 | | 150 | | 200 | | 250 | |
| | R/s | BkW | R/s | BkW | R/s | BkW | R/s | BkW | R/s | BkW |
| **1500** | 9.8 | 0.55 | 10.9 | 0.67 | 12.0 | 0.79 | 12.9 | 0.92 | **13.8** | **1.04** |
| **1550** | 10.0 | 0.60 | 11.2 | 0.74 | 12.2 | 0.86 | **13.1** | **0.98** | **13.9** | **1.11** |
| **1600** | 10.3 | 0.66 | 11.4 | 0.80 | 12.4 | 0.92 | **13.3** | **1.05** | **14.2** | **1.18** |
| **1650** | 10.6 | 0.72 | 11.7 | 0.86 | 12.6 | 0.98 | **13.6** | **1.12** | **14.4** | **1.25** |
| **1700** | 10.9 | 0.78 | 12.0 | 0.93 | 12.8 | 1.06 | **13.7** | **1.20** | **14.6** | **1.34** |
| **1750** | 11.1 | 0.86 | 12.2 | 1.00 | **13.1** | **1.14** | **14.0** | **1.28** | **14.8** | **1.42** |
| **1800** | 11.4 | 0.93 | 12.5 | 1.08 | **13.3** | **1.22** | **14.2** | **1.36** | **15.0** | **1.52** |
| **1850** | 11.7 | 1.00 | 12.7 | 1.15 | **13.6** | **1.31** | **14.4** | **1.44** | **15.2** | **1.60** |
| **1900** | 12.0 | 1.08 | 12.9 | 1.23 | **13.8** | **1.40** | **14.6** | **1.53** | **15.4** | **1.70** |
| **1950** | 12.2 | 1.16 | **13.2** | **1.31** | **14.1** | **1.49** | **14.8** | **1.63** | **15.6** | **1.79** |
| **2000** | 12.5 | 1.25 | **13.4** | **1.40** | **14.3** | **1.59** | **15.1** | **1.74** | 15.9 | 1.90 |
| **2050** | 12.8 | 1.34 | **13.7** | **1.50** | **14.6** | **1.69** | 15.3 | 1.85 | 16.1 | 2.00 |
| **2100** | **13.1** | **1.44** | **13.9** | **1.60** | 14.9 | 1.80 | 15.6 | 1.97 | 16.3 | 2.12 |
| **2150** | **13.3** | **1.53** | **14.2** | **1.71** | 15.1 | 1.91 | 15.8 | 2.09 | 16.5 | 2.24 |
| **2200** | **13.6** | **1.64** | 14.5 | 1.82 | 15.3 | 2.02 | 16.1 | 2.21 | 16.8 | 2.37 |
| **2250** | **13.9** | **1.75** | 14.7 | 1.94 | 15.6 | 2.13 | 16.3 | 2.34 | — | — |
| **2300** | 14.2 | 1.86 | 15.0 | 2.06 | 15.8 | 2.25 | 16.6 | 2.47 | — | — |
| **2400** | 14.5 | 1.98 | 15.3 | 2.19 | 16.1 | 2.38 | — | — | — | — |
| **2450** | 14.8 | 2.10 | 15.6 | 2.32 | — | — | — | — | — | — |

| AIRFLOW (L/s) | EXTERNAL STATIC PRESSURE (Pa) | | | | | | | | | |
|---|---|---|---|---|---|---|---|---|---|---|
| | 300 | | 350 | | 400 | | 450 | | 500 | |
| | R/s | BkW | R/s | BkW | R/s | BkW | R/s | BkW | R/s | BkW |
| **1500** | **14.6** | **1.15** | **15.3** | **1.26** | **16.1** | **1.38** | **16.9** | **1.45** | **17.7** | **1.68** |
| **1550** | **14.8** | **1.23** | **15.5** | **1.35** | **16.2** | **1.47** | **17.1** | **1.60** | 17.8 | 1.81 |
| **1600** | **15.0** | **1.30** | **15.7** | **1.44** | **16.4** | **1.55** | **17.1** | **1.68** | 17.9 | 1.86 |
| **1650** | **15.1** | **1.39** | **15.9** | **1.52** | **16.6** | **1.65** | **17.3** | **1.77** | 18.0 | 1.91 |
| **1700** | **15.3** | **1.47** | **16.1** | **1.61** | **16.8** | **1.74** | 17.4 | 1.88 | 18.1 | 2.00 |
| **1750** | **15.5** | **1.56** | **16.3** | **1.70** | 17.0 | 1.85 | 17.6 | 1.98 | 18.2 | 2.11 |
| **1800** | **15.8** | **1.66** | 16.4 | 1.80 | 17.2 | 1.95 | 17.8 | 2.09 | 18.4 | 2.22 |
| **1850** | **16.0** | **1.75** | 16.6 | 1.90 | 17.3 | 2.05 | 18.0 | 2.20 | 18.6 | 2.34 |
| **1900** | 16.2 | 1.86 | 16.9 | 2.01 | 17.5 | 2.16 | 18.2 | 2.31 | — | — |
| **1950** | 16.4 | 1.96 | 17.1 | 2.12 | 17.7 | 2.26 | 18.4 | 2.43 | — | — |
| **2000** | 16.6 | 2.07 | 17.3 | 2.24 | 17.9 | 2.39 | — | — | — | — |
| **2050** | 16.8 | 2.18 | 17.5 | 2.36 | — | — | — | — | — | — |
| **2100** | 17.0 | 2.30 | — | — | — | — | — | — | — | — |
| **2150** | 17.2 | 2.41 | — | — | — | — | — | — | — | — |
| **2200** | — | — | — | — | — | — | — | — | — | — |
| **2250** | — | — | — | — | — | — | — | — | — | — |
| **2300** | — | — | — | — | — | — | — | — | — | — |
| **2400** | — | — | — | — | — | — | — | — | — | — |
| **2450** | — | — | — | — | — | — | — | — | — | — |

LEGEND

**BkW** — Fan Input kW x Motor Efficiency
**R/s** — Revolutions Per Second of Blower Wheel

NOTES:
1. **Boldface** indicates field-supplied drive required. (See Note 5.)
2. ▬ indicates field-supplied motor and drive are required.
3. Values include losses for filters, unit casing, and wet coils.
4. Use of a field-supplied motor may affect wire sizing. Contact your Carrier representative to verify.
5. Standard drive range is 9.5 to 13.0 r/s. All other speeds require a field-supplied drive.
6. Maximum continuous BkW is 1.79. Extensive motor and electrical testing on these units ensures that the full range of the motor can be utilized with confidence. Using the fan motors up to the ratings shown will not result in nuisance tripping or premature motor failure. Unit warranty will not be affected.
7. Interpolation is permissible. Do not extrapolate.

## Table 14 — Fan Performance, 48TF014 — Vertical Discharge Units (SI)

| AIRFLOW (L/s) | EXTERNAL STATIC PRESSURE (Pa) | | | | | | | | | |
|---|---|---|---|---|---|---|---|---|---|---|
| | 50 | | 100 | | 150 | | 200 | | 250 | |
| | R/s | BkW | R/s | BkW | R/s | BkW | R/s | BkW | R/s | BkW |
| **1900** | 12.5 | 1.10 | 13.5 | 1.27 | 14.4 | 1.42 | **15.3** | **1.63** | **16.1** | **1.81** |
| **1950** | 12.7 | 1.18 | 13.7 | 1.36 | 14.6 | 1.52 | **15.5** | **1.73** | **16.4** | **1.92** |
| **2000** | 13.0 | 1.27 | 14.0 | 1.46 | 14.9 | 1.62 | **15.7** | **1.81** | **16.6** | **2.02** |
| **2050** | 13.3 | 1.36 | 14.3 | 1.56 | **15.1** | **1.72** | **16.0** | **1.91** | **16.8** | **2.14** |
| **2100** | 13.6 | 1.46 | 14.5 | 1.66 | **15.4** | **1.84** | **16.2** | **2.01** | **17.0** | **2.25** |
| **2150** | 13.9 | 1.56 | 14.8 | 1.78 | **15.7** | **1.95** | **16.5** | **2.13** | **17.3** | **2.37** |
| **2250** | 14.2 | 1.67 | **15.1** | **1.89** | **15.9** | **2.07** | **16.7** | **2.24** | **17.5** | **2.48** |
| **2300** | 14.5 | 1.78 | **15.4** | **2.00** | **16.2** | **2.19** | **17.0** | **2.37** | **17.7** | **2.60** |
| **2350** | 14.8 | 1.89 | **15.7** | **2.13** | **16.4** | **2.32** | **17.2** | **2.51** | **18.0** | **2.72** |
| **2400** | 15.0 | 2.01 | **15.9** | **2.25** | **16.7** | **2.46** | **17.5** | **2.64** | 18.2 | 2.85 |
| **2450** | **15.4** | **2.16** | **16.2** | **2.38** | **17.0** | **2.60** | 17.7 | 2.79 | 18.5 | 2.99 |
| **2500** | **15.7** | **2.28** | **16.5** | **2.52** | **17.3** | **2.75** | 18.0 | 2.95 | 18.7 | 3.13 |
| **2550** | **15.9** | **2.43** | **16.8** | **2.65** | 17.5 | 2.90 | 18.2 | 3.10 | 18.0 | 3.29 |
| **2600** | **16.2** | **2.58** | 17.1 | 2.81 | 17.8 | 3.05 | 18.5 | 3.26 | 19.2 | 3.47 |
| **2650** | **16.5** | **2.72** | 17.3 | 2.95 | 18.1 | 3.22 | 18.8 | 3.43 | 19.4 | 3.64 |
| **2700** | 16.8 | 2.89 | 17.6 | 3.12 | 18.4 | 3.39 | 19.0 | 3.60 | 19.7 | 3.83 |
| **2750** | 17.1 | 3.05 | 17.9 | 3.28 | 18.7 | 3.56 | 19.3 | 3.80 | 20.0 | 4.01 |
| **2800** | 17.4 | 3.21 | 18.2 | 3.45 | 18.9 | 3.74 | 19.6 | 3.98 | 20.2 | 4.19 |
| **2850** | 17.7 | 3.40 | 18.5 | 3.64 | 19.2 | 3.93 | 19.9 | 4.18 | 20.5 | 4.41 |
| **2900** | 18.0 | 3.57 | 18.8 | 3.81 | 19.5 | 4.11 | 20.2 | 4.37 | — | — |
| **2950** | 18.3 | 3.76 | 19.1 | 4.02 | 19.8 | 4.29 | — | — | — | — |
| **3000** | 18.6 | 3.96 | 19.4 | 4.21 | 20.1 | 4.51 | — | — | — | — |
| **3050** | 18.9 | 4.15 | 19.6 | 4.40 | — | — | — | — | — | — |
| **3100** | 19.2 | 4.38 | — | — | — | — | — | — | — | — |

| AIRFLOW (L/s) | EXTERNAL STATIC PRESSURE (Pa) | | | | | | | | | |
|---|---|---|---|---|---|---|---|---|---|---|
| | 300 | | 350 | | 400 | | 450 | | 500 | |
| | R/s | BkW | R/s | BkW | R/s | BkW | R/s | BkW | R/s | BkW |
| **1900** | **17.0** | **2.00** | **17.9** | **2.21** | **18.7** | **2.39** | **19.4** | **2.58** | **20.1** | **2.74** |
| **1950** | **17.2** | **2.11** | **18.0** | **2.31** | **18.8** | **2.51** | **19.6** | **2.71** | 20.3 | 2.88 |
| **2000** | **17.4** | **2.22** | **18.2** | **2.43** | **19.0** | **2.63** | 19.8 | 2.84 | 20.5 | 3.02 |
| **2050** | **17.6** | **2.33** | **18.4** | **2.54** | **19.2** | **2.76** | 19.9 | 2.97 | 20.7 | 3.17 |
| **2100** | **17.8** | **2.45** | **18.6** | **2.66** | 19.3 | 2.89 | 20.1 | 3.10 | 20.8 | 3.32 |
| **2150** | **18.0** | **2.59** | 18.8 | 2.79 | 19.5 | 3.01 | 20.3 | 3.24 | 21.0 | 3.46 |
| **2250** | **18.2** | **2.71** | 19.0 | 2.93 | 19.7 | 3.15 | 20.4 | 3.37 | 21.2 | 3.60 |
| **2300** | 18.5 | 2.85 | 19.2 | 3.05 | 19.9 | 3.29 | 20.6 | 3.52 | 21.3 | 3.76 |
| **2350** | 18.7 | 2.99 | 19.4 | 3.21 | 20.1 | 3.43 | 20.8 | 3.67 | 21.5 | 3.92 |
| **2400** | 18.9 | 3.12 | 19.6 | 3.36 | 20.3 | 3.59 | 21.0 | 3.82 | 21.7 | 4.08 |
| **2450** | 19.2 | 3.27 | 19.8 | 3.53 | 20.5 | 3.74 | 21.2 | 3.99 | — | — |
| **2500** | 19.4 | 3.38 | 20.1 | 3.67 | 20.7 | 3.93 | 21.4 | 4.15 | — | — |
| **2550** | 19.6 | 3.54 | 20.3 | 3.83 | 21.0 | 4.09 | 21.6 | 4.33 | — | — |
| **2600** | 19.9 | 3.69 | 20.5 | 4.01 | 21.2 | 4.27 | — | — | — | — |
| **2650** | 20.1 | 3.86 | 20.8 | 4.16 | 21.4 | 4.44 | — | — | — | — |
| **2700** | 20.4 | 4.03 | 21.0 | 4.32 | — | — | — | — | — | — |
| **2750** | 20.6 | 4.21 | — | — | — | — | — | — | — | — |
| **2800** | 20.9 | 4.40 | — | — | — | — | — | — | — | — |
| **2850** | — | — | — | — | — | — | — | — | — | — |
| **2900** | — | — | — | — | — | — | — | — | — | — |
| **2950** | — | — | — | — | — | — | — | — | — | — |
| **3000** | — | — | — | — | — | — | — | — | — | — |
| **3050** | — | — | — | — | — | — | — | — | — | — |
| **3100** | — | — | — | — | — | — | — | — | — | — |

LEGEND

**BkW** — Fan Input kW x Motor Efficiency
**R/s** — Revolutions Per Second of Blower Wheel

NOTES:
1. **Boldface** indicates field-supplied drive required. (See Note 5.)
2. ▒ indicates field-supplied motor and drive are required.
3. Values include losses for filters, unit casing, and wet coils.
4. Use of a field-supplied motor may affect wire sizing. Contact your Carrier representative to verify.
5. Standard drive range is 12.0 to 15.0 r/s. All other speeds require a field-supplied drive.
6. Maximum continuous BkW is 2.76. Extensive motor and electrical testing on these units ensures that the full range of the motor can be utilized with confidence. Using the fan motors up to the ratings shown will not result in nuisance tripping or premature motor failure. Unit warranty will not be affected.
7. Interpolation is permissible. Do not extrapolate.

## Table 15 — Fan Performance, 48TF008 — Horizontal Discharge Units (SI)

| AIRFLOW (L/s) | EXTERNAL STATIC PRESSURE (Pa) | | | | | | | | | |
|---|---|---|---|---|---|---|---|---|---|---|
| | 50 | | 100 | | 150 | | 200 | | 225 | |
| | R/s | BkW | R/s | BkW | R/s | BkW | R/s | BkW | R/s | BkW |
| **1075** | **8.1** | **0.34** | 9.5 | 0.49 | 10.7 | 0.66 | **11.8** | **0.81** | **12.4** | **0.92** |
| **1125** | 8.4 | 0.39 | 9.7 | 0.53 | 10.9 | 0.71 | **12.0** | **0.89** | **12.5** | **0.98** |
| **1150** | 8.6 | 0.42 | 9.9 | 0.58 | 11.1 | 0.76 | **12.2** | **0.96** | **12.7** | **1.05** |
| **1200** | 8.9 | 0.46 | 10.2 | 0.64 | 11.3 | 0.81 | **12.4** | **1.02** | **12.8** | **1.11** |
| **1250** | 9.1 | 0.51 | 10.4 | 0.70 | 11.5 | 0.87 | **12.6** | **1.08** | **13.0** | **1.19** |
| **1300** | 9.4 | 0.56 | 10.7 | 0.75 | 11.7 | 0.93 | **12.7** | **1.14** | **13.2** | **1.25** |
| **1400** | 9.7 | 0.62 | 10.9 | 0.82 | **12.0** | **0.99** | **12.9** | **1.22** | **13.4** | **1.33** |
| **1450** | 10.0 | 0.67 | 11.2 | 0.88 | **12.2** | **1.07** | **13.2** | **1.27** | **13.6** | **1.40** |
| **1500** | 10.2 | 0.74 | 11.4 | 0.94 | **12.4** | **1.15** | **13.4** | **1.36** | **13.8** | **1.48** |
| **1550** | 10.5 | 0.80 | 11.7 | 1.02 | **12.7** | **1.23** | **13.6** | **1.44** | **14.0** | **1.56** |
| **1600** | 10.8 | 0.88 | **11.9** | **1.09** | **12.9** | **1.32** | **13.8** | **1.53** | **14.2** | **1.65** |
| **1650** | 11.1 | 0.97 | **12.2** | **1.17** | **13.2** | **1.41** | **14.0** | **1.63** | **14.4** | **1.75** |
| **1700** | 11.4 | 1.04 | **12.4** | **1.25** | **13.4** | **1.51** | **14.3** | **1.73** | 14.7 | 1.85 |
| **1750** | 11.7 | 1.12 | **12.7** | **1.35** | **13.7** | **1.61** | 14.5 | 1.85 | 14.9 | 1.97 |
| **1800** | **12.0** | **1.23** | **13.0** | **1.45** | **13.9** | **1.70** | 14.8 | 1.95 | 15.1 | 2.07 |
| **1850** | **12.2** | **1.33** | **13.2** | **1.54** | 14.2 | 1.81 | 15.0 | 2.08 | 15.4 | 2.20 |
| **1900** | **12.5** | **1.42** | **13.5** | **1.65** | 14.4 | 1.92 | 15.2 | 2.20 | 15.6 | 2.34 |

| AIRFLOW (L/s) | EXTERNAL STATIC PRESSURE (Pa) | | | | | | | |
|---|---|---|---|---|---|---|---|---|
| | 250 | | 300 | | 350 | | 400 | |
| | R/s | BkW | R/s | BkW | R/s | BkW | R/s | BkW |
| **1075** | **12.9** | **1.03** | **13.9** | **1.29** | **15.0** | **1.60** | 15.7 | 1.89 |
| **1125** | **13.0** | **1.08** | **14.0** | **1.34** | **15.1** | **1.68** | 15.9 | 1.92 |
| **1150** | **13.1** | **1.13** | **14.1** | **1.38** | **15.2** | **1.69** | 16.0 | 1.96 |
| **1200** | **13.3** | **1.21** | **14.3** | **1.42** | **15.2** | **1.74** | 16.0 | 2.01 |
| **1250** | **13.5** | **1.29** | **14.4** | **1.48** | **15.3** | **1.78** | 16.2 | 2.06 |
| **1300** | **13.7** | **1.37** | **14.5** | **1.56** | 15.4 | 1.81 | 16.3 | 2.09 |
| **1400** | **13.9** | **1.44** | **14.7** | **1.66** | 15.5 | 1.84 | 16.4 | 2.19 |
| **1450** | **14.1** | **1.52** | **14.9** | **1.77** | 15.7 | 1.97 | 16.5 | 2.18 |
| **1500** | **14.3** | **1.60** | 15.1 | 1.86 | 15.9 | 2.08 | 16.6 | 2.29 |
| **1550** | **14.2** | **1.68** | 15.3 | 1.94 | 16.1 | 2.21 | 16.8 | 2.43 |
| **1600** | **14.8** | **1.77** | 15.5 | 2.04 | 16.3 | 2.31 | 17.0 | 2.55 |
| **1650** | 14.9 | 1.86 | 15.7 | 2.13 | 16.5 | 2.42 | 17.2 | 2.70 |
| **1700** | 15.1 | 1.97 | 15.9 | 2.24 | 16.6 | 2.52 | 17.4 | 2.82 |
| **1750** | 15.3 | 2.08 | 16.1 | 2.35 | 16.3 | 2.64 | 17.6 | 2.94 |
| **1800** | 15.5 | 2.20 | 16.3 | 2.45 | 17.0 | 2.76 | 17.7 | 3.05 |
| **1850** | 15.8 | 2.32 | 16.5 | 2.58 | 17.2 | 2.87 | 17.9 | 3.19 |
| **1900** | 16.0 | 2.46 | 16.7 | 2.70 | 17.5 | 2.99 | 18.1 | 3.31 |

LEGEND

**BkW** — Fan Input kW x Motor Efficiency
**R/s** — Revolutions Per Second of Blower Wheel

NOTES:
1. **Boldface** indicates field-supplied drive required. (See Note 5.)
2. ▒ indicates field-supplied motor and drive are required.
3. Values include losses for filters, unit casing, and wet coils.
4. Use of a field-supplied motor may affect wire sizing. Contact your Carrier representative to verify.
5. Standard drive range is 8.2 to 11.7 r/s. All other speeds require a field-supplied drive.
6. Maximum continuous BkW is 1.79. Extensive motor and electrical testing on these units ensures that the full range of the motor can be utilized with confidence. Using the fan motors up to the ratings shown will not result in nuisance tripping or premature motor failure. Unit warranty will not be affected.
7. Interpolation is permissible. Do not extrapolate.

## Table 16 — Fan Performance, 48TF012 — Horizontal Discharge Units (SI)

| AIRFLOW (L/s) | EXTERNAL STATIC PRESSURE (Pa) | | | | | | | | | |
|---|---|---|---|---|---|---|---|---|---|---|
| | 50 | | 100 | | 150 | | 200 | | 250 | |
| | R/s | BkW | R/s | BkW | R/s | BkW | R/s | BkW | R/s | BkW |
| **1500** | **9.1** | **0.49** | 10.5 | 0.63 | 11.6 | 0.77 | 12.6 | 0.89 | **13.5** | **0.99** |
| **1550** | **9.4** | **0.54** | 10.7 | 0.68 | 11.8 | 0.82 | 12.8 | 0.96 | **13.7** | **1.06** |
| **1600** | 9.6 | 0.59 | 10.9 | 0.73 | 12.0 | 0.88 | 13.0 | 1.02 | **13.9** | **1.14** |
| **1650** | 9.8 | 0.65 | 11.1 | 0.80 | 12.2 | 0.95 | **13.2** | **1.09** | **14.1** | **1.22** |
| **1700** | 10.1 | 0.71 | 11.3 | 0.86 | 12.4 | 1.01 | **13.4** | **1.16** | **14.2** | **3.10** |
| **1750** | 10.3 | 0.77 | 11.5 | 0.92 | 12.6 | 1.07 | **13.5** | **1.23** | **14.4** | **1.38** |
| **1800** | 10.6 | 0.84 | 11.7 | 0.98 | 12.8 | 1.14 | **13.7** | **1.30** | **14.6** | **1.47** |
| **1850** | 10.8 | 0.92 | 11.9 | 1.04 | 13.0 | 1.21 | **13.9** | **1.39** | **14.8** | **1.55** |
| **1900** | 11.1 | 1.00 | 12.1 | 1.14 | **13.2** | **1.29** | **14.1** | **1.47** | **15.0** | **1.64** |
| **1950** | 11.3 | 1.09 | 12.3 | 1.22 | **13.4** | **1.38** | **14.3** | **1.55** | **15.2** | **1.72** |
| **2000** | 11.6 | 1.18 | 12.6 | 1.31 | **13.6** | **1.47** | **14.5** | **1.65** | 15.3 | 1.82 |
| **2050** | 11.9 | 1.28 | 12.8 | 1.40 | **13.8** | **1.56** | **14.7** | **1.73** | 15.5 | 1.92 |
| **2100** | 12.1 | 1.38 | 13.0 | 1.50 | **14.0** | **1.64** | 14.9 | 1.82 | 15.8 | 2.02 |
| **2150** | 12.4 | 1.49 | **13.2** | **1.60** | **14.2** | **1.73** | 15.1 | 1.93 | 15.9 | 2.13 |
| **2200** | 12.7 | 1.61 | **13.4** | **1.70** | 14.4 | 1.83 | 15.3 | 2.04 | 16.1 | 2.24 |
| **2300** | 12.9 | 1.74 | 13.7 | 1.81 | 14.6 | 1.93 | 15.5 | 2.15 | — | — |
| **2350** | 13.2 | 1.86 | 13.9 | 1.93 | 14.8 | 2.03 | 15.7 | 2.27 | — | — |
| **2400** | 13.5 | 2.00 | 14.2 | 2.05 | 15.0 | 2.14 | — | — | — | — |
| **2500** | — | — | 14.4 | 2.14 | 15.2 | 2.25 | — | — | — | — |

| AIRFLOW (L/s) | EXTERNAL STATIC PRESSURE (Pa) | | | | | | | | | |
|---|---|---|---|---|---|---|---|---|---|---|
| | 300 | | 350 | | 400 | | 450 | | 500 | |
| | R/s | BkW | R/s | BkW | R/s | BkW | R/s | BkW | R/s | BkW |
| **1500** | **14.5** | **1.13** | **15.2** | **1.22** | **16.1** | **1.40** | **16.8** | **1.54** | 17.7 | 1.82 |
| **1550** | **14.6** | **1.20** | **15.4** | **1.30** | **16.2** | **1.43** | **16.9** | **1.60** | 17.8 | 1.86 |
| **1600** | **14.8** | **1.26** | **15.6** | **1.40** | **16.3** | **1.50** | **17.1** | **1.68** | 17.9 | 1.91 |
| **1650** | **14.9** | **1.33** | **15.7** | **1.48** | **16.5** | **1.60** | **17.2** | **1.72** | 18.0 | 1.97 |
| **1700** | **15.0** | **1.42** | **15.9** | **1.56** | **16.7** | **1.70** | 17.3 | 1.81 | 18.0 | 1.97 |
| **1750** | **15.2** | **1.51** | **16.0** | **1.64** | **16.8** | **1.79** | 17.5 | 1.91 | 18.2 | 2.04 |
| **1800** | **15.4** | **1.61** | **16.2** | **1.73** | 17.0 | 1.89 | 17.7 | 2.03 | 18.3 | 2.15 |
| **1850** | **15.6** | **1.71** | 16.3 | 1.84 | 17.1 | 1.98 | 17.8 | 2.15 | 18.5 | 2.27 |
| **1900** | 15.8 | 1.80 | 16.5 | 1.94 | 17.2 | 2.07 | 18.0 | 2.24 | 18.7 | 2.40 |
| **1950** | 16.0 | 1.91 | 16.7 | 2.06 | 17.4 | 2.19 | — | — | — | — |
| **2000** | 16.2 | 2.01 | 16.9 | 2.17 | 17.6 | 2.31 | — | — | — | — |
| **2050** | 16.3 | 2.10 | 17.1 | 2.29 | — | — | — | — | — | — |
| **2100** | 16.5 | 2.21 | — | — | — | — | — | — | — | — |
| **2150** | 16.7 | 2.32 | — | — | — | — | — | — | — | — |
| **2200** | 16.9 | 2.43 | — | — | — | — | — | — | — | — |
| **2300** | — | — | — | — | — | — | — | — | — | — |
| **2350** | — | — | — | — | — | — | — | — | — | — |
| **2400** | — | — | — | — | — | — | — | — | — | — |
| **2500** | — | — | — | — | — | — | — | — | — | — |

LEGEND

**BkW** — Fan Input kW x Motor Efficiency
**R/s** — Revolutions Per Second of Blower Wheel

NOTES:
1. **Boldface** indicates field-supplied drive required. (See Note 5.)
2. ▓ indicates field-supplied motor and drive are required.
3. Values include losses for filters, unit casing, and wet coils.
4. Use of a field-supplied motor may affect wire sizing. Contact your Carrier representative to verify.
5. Standard drive range is 9.5 to 13.0 r/s. All other speeds require a field-supplied drive.
6. Maximum continuous BkW is 1.79. Extensive motor and electrical testing on these units ensures that the full range of the motor can be utilized with confidence. Using the fan motors up to the ratings shown will not result in nuisance tripping or premature motor failure. Unit warranty will not be affected.
7. Interpolation is permissible. Do not extrapolate.

## Table 17 — Fan Performance, 48TF014 — Horizontal Discharge Units (SI)

| AIRFLOW (L/s) | EXTERNAL STATIC PRESSURE (Pa) | | | | | | | | | |
|---|---|---|---|---|---|---|---|---|---|---|
| | 50 | | 100 | | 150 | | 200 | | 225 | |
| | R/s | BkW | R/s | BkW | R/s | BkW | R/s | BkW | R/s | BkW |
| **1900** | **11.5** | **0.96** | 12.7 | 1.14 | 13.7 | 1.32 | 14.7 | 1.49 | **15.6** | **1.71** |
| **1950** | **11.8** | **1.04** | 12.9 | 1.22 | 13.9 | 1.40 | 14.9 | 1.57 | **15.8** | **1.80** |
| **2000** | 12.1 | 1.12 | 13.2 | 1.29 | 14.2 | 1.49 | **15.1** | **1.65** | **16.0** | **1.89** |
| **2050** | 12.3 | 1.18 | 13.4 | 1.38 | 14.4 | 1.59 | **15.3** | **1.75** | **16.2** | **1.96** |
| **2100** | 12.6 | 1.27 | 13.6 | 1.46 | 14.6 | 1.68 | **15.5** | **1.86** | **16.4** | **2.05** |
| **2150** | 12.8 | 1.36 | 13.9 | 1.56 | 14.9 | 1.78 | **15.7** | **1.96** | **16.6** | **2.15** |
| **2200** | 13.1 | 1.44 | 14.1 | 1.66 | **15.1** | **1.88** | **16.0** | **2.07** | **16.8** | **2.26** |
| **2250** | 13.3 | 1.53 | 14.4 | 1.75 | **15.3** | **1.99** | **16.2** | **2.20** | **17.0** | **2.36** |
| **2325** | 13.6 | 1.63 | 14.6 | 1.87 | **15.5** | **2.10** | **16.4** | **2.30** | **17.2** | **2.50** |
| **2400** | 13.9 | 1.74 | 14.9 | 1.98 | **15.8** | **2.20** | **16.6** | **2.44** | **17.4** | **2.64** |
| **2450** | 14.1 | 1.84 | **15.1** | **2.10** | **16.0** | **2.31** | **16.8** | **2.56** | 17.6 | 2.77 |
| **2500** | 14.4 | 1.95 | **15.4** | **2.22** | **16.2** | **2.44** | **17.1** | **2.69** | 17.8 | 2.90 |
| **2550** | 14.7 | 2.07 | **15.6** | **2.34** | **16.5** | **2.56** | 17.3 | 2.83 | 18.1 | 3.05 |
| **2600** | 14.9 | 2.18 | **15.8** | **2.47** | **16.7** | **2.69** | 17.5 | 2.96 | 18.3 | 3.20 |
| **2650** | **15.2** | **2.32** | **16.1** | **2.60** | 16.9 | 2.83 | 17.8 | 3.11 | 18.5 | 3.34 |
| **2700** | **15.4** | **2.44** | **16.4** | **2.74** | 17.2 | 2.96 | 18.0 | 3.26 | 18.7 | 3.51 |
| **2750** | **15.7** | **2.57** | 16.6 | 2.89 | 17.4 | 3.11 | 18.2 | 8.38 | 19.0 | 3.67 |
| **2800** | **15.9** | **2.71** | 16.9 | 3.03 | 17.7 | 3.27 | 18.4 | 3.55 | 19.2 | 3.84 |
| **2850** | 16.2 | 2.86 | 17.1 | 3.18 | 17.9 | 3.46 | 18.7 | 3.70 | — | — |
| **2900** | 16.5 | 2.98 | 17.3 | 3.32 | 18.2 | 3.57 | 18.9 | 3.85 | — | — |
| **2950** | 16.7 | 3.11 | 17.6 | 3.46 | 18.4 | 3.72 | — | — | — | — |
| **3000** | 17.0 | 3.25 | 17.8 | 3.60 | 18.7 | 3.87 | — | — | — | — |
| **3050** | 17.3 | 3.38 | 18.1 | 3.74 | — | — | — | — | — | — |
| **3100** | 17.5 | 3.52 | 18.3 | 3.89 | — | — | — | — | — | — |

| AIRFLOW (L/s) | EXTERNAL STATIC PRESSURE (Pa) | | | | | | | | | |
|---|---|---|---|---|---|---|---|---|---|---|
| | 300 | | 350 | | 400 | | 450 | | 500 | |
| | R/s | BkW | R/s | BkW | R/s | BkW | R/s | BkW | R/s | BkW |
| **1900** | **16.6** | **1.91** | **17.5** | **2.11** | **18.2** | **2.29** | **18.9** | **2.44** | **19.3** | **2.55** |
| **1950** | **16.7** | **2.00** | **17.6** | **2.21** | **18.4** | **2.41** | **19.1** | **2.58** | **19.6** | **2.71** |
| **2000** | **16.9** | **2.11** | **17.8** | **2.31** | **18.6** | **2.52** | **19.3** | **2.71** | 19.9 | 2.87 |
| **2050** | **17.1** | **2.20** | **17.9** | **2.42** | **18.7** | **2.64** | 19.5 | 2.84 | 20.1 | 3.02 |
| **2100** | **17.2** | **2.30** | **18.1** | **2.53** | **18.9** | **2.76** | 19.6 | 2.97 | 20.3 | 3.17 |
| **2150** | **17.4** | **2.42** | **18.2** | **2.64** | 19.0 | 2.88 | 19.8 | 3.10 | 20.5 | 3.31 |
| **2200** | **17.6** | **2.52** | **18.4** | **2.76** | 19.2 | 2.99 | 20.0 | 3.23 | 20.7 | 3.45 |
| **2250** | **17.8** | **2.61** | 18.6 | 2.88 | 19.4 | 3.11 | 20.1 | 3.37 | 20.9 | 3.60 |
| **2235** | **18.0** | **2.71** | 18.8 | 3.00 | 19.5 | 3.26 | 20.3 | 3.49 | 21.0 | 3.75 |
| **2400** | 18.2 | 2.83 | 18.9 | 3.13 | 19.7 | 3.39 | 20.5 | 3.64 | 21.2 | 3.89 |
| **2450** | 18.4 | 2.97 | 19.1 | 3.24 | 19.9 | 3.52 | 20.6 | 3.77 | — | — |
| **2500** | 18.6 | 3.09 | 19.3 | 3.35 | 20.0 | 3.66 | 20.8 | 3.93 | — | — |
| **2550** | 18.8 | 3.25 | 19.5 | 3.49 | 20.2 | 3.81 | — | — | — | — |
| **2600** | 19.0 | 3.42 | 19.7 | 3.63 | 20.4 | 3.95 | — | — | — | — |
| **2650** | 19.2 | 3.58 | 19.9 | 3.81 | — | — | — | — | — | — |
| **2700** | 19.4 | 3.73 | 20.1 | 3.92 | — | — | — | — | — | — |
| **2750** | 19.7 | 3.91 | — | — | — | — | — | — | — | — |
| **2800** | — | — | — | — | — | — | — | — | — | — |
| **2850** | — | — | — | — | — | — | — | — | — | — |
| **2900** | — | — | — | — | — | — | — | — | — | — |
| **2950** | — | — | — | — | — | — | — | — | — | — |
| **3000** | — | — | — | — | — | — | — | — | — | — |
| **3050** | — | — | — | — | — | — | — | — | — | — |
| **3100** | — | — | — | — | — | — | — | — | — | — |

LEGEND

**BkW** — Fan Input kW x Motor Efficiency
**R/s** — Revolutions Per Second of Blower Wheel

NOTES:
1. **Boldface** indicates field-supplied drive required. (See Note 5.)
2. ▬ indicates field-supplied motor and drive are required.
3. Values include losses for filters, unit casing, and wet coils.
4. Use of a field-supplied motor may affect wire sizing. Contact your Carrier representative to verify.
5. Standard drive range is 12.0 to 15.0 r/s. All other speeds require a field-supplied drive.
6. Maximum continuous BkW is 2.76. Extensive motor and electrical testing on these units ensures that the full range of the motor can be utilized with confidence. Using the fan motors up to the ratings shown will not result in nuisance tripping or premature motor failure. Unit warranty will not be affected.
7. Interpolation is permissible. Do not extrapolate.

## Table 18 — Fan Performance, 48TF008 — Vertical Discharge Units (English)

| AIRFLOW (Cfm) | EXTERNAL STATIC PRESSURE (in. wg) | | | | | | | |
|---|---|---|---|---|---|---|---|---|
| | 0.2 | | 0.4 | | 0.6 | | 0.8 | |
| | Rpm | Bhp | Rpm | Bhp | Rpm | Bhp | Rpm | Bhp |
| **2200** | 506 | 0.52 | 586 | 0.72 | 656 | 0.95 | **718** | **1.18** |
| **2250** | 514 | 0.55 | 593 | 0.76 | 662 | 0.99 | **724** | **1.22** |
| **2300** | 521 | 0.56 | 600 | 0.79 | 668 | 1.02 | **730** | **1.26** |
| **2400** | 536 | 0.63 | 613 | 0.85 | 680 | 1.09 | **741** | **1.34** |
| **2500** | 551 | 0.69 | 626 | 0.93 | 693 | 1.17 | **753** | **1.43** |
| **2550** | 559 | 0.72 | 634 | 0.97 | 700 | 1.21 | **759** | **1.48** |
| **2600** | 567 | 0.75 | 641 | 1.00 | **706** | **1.25** | **764** | **1.52** |
| **2700** | 582 | 0.83 | 655 | 1.08 | **719** | **1.34** | **776** | **1.61** |
| **2800** | 598 | 0.90 | 670 | 1.17 | **732** | **1.43** | **789** | **1.71** |
| **2900** | 614 | 0.98 | 684 | 1.25 | **745** | **1.53** | **802** | **1.81** |
| **3000** | 630 | 1.07 | 699 | 1.35 | **759** | **1.63** | **815** | **1.92** |
| **3100** | 646 | 1.16 | **714** | **1.45** | **773** | **1.74** | **828** | **2.04** |
| **3200** | 662 | 1.26 | **729** | **1.55** | **787** | **1.86** | **841** | **2.16** |
| **3300** | 679 | 1.36 | **744** | **1.66** | **801** | **1.98** | **854** | **2.29** |
| **3400** | 695 | 1.47 | **759** | **1.78** | **816** | **2.10** | 867 | 2.42 |
| **3500** | **712** | **1.59** | **774** | **1.90** | **830** | **2.23** | 881 | 2.56 |
| **3600** | **729** | **1.71** | **790** | **2.03** | **845** | **2.37** | 895 | 2.71 |
| **3700** | **745** | **1.84** | **805** | **2.17** | 860 | 2.52 | 909 | 2.87 |
| **3750** | **754** | **1.91** | **813** | **2.24** | 868 | 2.59 | 917 | 2.95 |

| AIRFLOW (Cfm) | EXTERNAL STATIC PRESSURE (in. wg) | | | | | | | |
|---|---|---|---|---|---|---|---|---|
| | 1.0 | | 1.2 | | 1.4 | | 1.6 | |
| | Rpm | Bhp | Rpm | Bhp | Rpm | Bhp | Rpm | Bhp |
| **2200** | **776** | **1.43** | **838** | **1.78** | **898** | **2.21** | 935 | 2.58 |
| **2250** | **781** | **1.78** | **841** | **1.81** | **902** | **2.25** | 939 | 2.60 |
| **2300** | **786** | **1.50** | **843** | **1.83** | **905** | **2.28** | 943 | 2.62 |
| **2400** | **796** | **1.59** | **849** | **1.88** | **910** | **2.31** | 952 | 2.74 |
| **2500** | **808** | **1.69** | **859** | **1.96** | **912** | **2.31** | 963 | 2.81 |
| **2550** | **814** | **1.74** | **864** | **2.01** | **915** | **2.34** | 968 | 2.81 |
| **2600** | **819** | **1.79** | **869** | **2.06** | **918** | **2.37** | 973 | 2.81 |
| **2700** | **831** | **1.89** | **880** | **2.17** | 927 | 2.47 | 976 | 2.84 |
| **2800** | **842** | **2.00** | **892** | **2.29** | 938 | 2.58 | 983 | 2.92 |
| **2900** | **854** | **2.11** | 903 | 2.42 | 949 | 2.71 | 993 | 3.03 |
| **3000** | **866** | **2.23** | 915 | 2.54 | 961 | 2.85 | 1003 | 3.17 |
| **3100** | **878** | **2.35** | 926 | 2.67 | 972 | 3.00 | 1015 | 3.32 |
| **3200** | 891 | 2.48 | 938 | 2.81 | 983 | 3.14 | 1026 | 3.47 |
| **3300** | 904 | 2.61 | 950 | 2.95 | 995 | 3.30 | — | — |
| **3400** | 917 | 2.75 | 963 | 3.10 | 1007 | 3.45 | — | — |
| **3500** | 930 | 2.90 | 976 | 3.25 | — | — | — | — |
| **3600** | 943 | 3.05 | 988 | 3.41 | — | — | — | — |
| **3700** | 956 | 3.22 | — | — | — | — | — | — |
| **3750** | 963 | 3.30 | — | — | — | — | — | — |

LEGEND

**Bhp** — Brake Horsepower at Motor Shaft
**Rpm** — Revolutions Per Minute of Blower Wheel

NOTES:
1. **Boldface** indicates field-supplied drive required. (See Note 5.)
2. ▬ indicates field-supplied motor and drive are required.
3. Values include losses for filters, unit casing, and wet coils.
4. Use of a field-supplied motor may affect wire sizing. Contact your Carrier representative to verify.
5. Standard drive range is 492 to 700 rpm. All other rpms require a field-supplied drive.
6. Maximum continuous bhp is 2.4. Extensive motor and electrical testing on these units ensures that the full range of the motor can be utilized with confidence. Using the fan motors up to the ratings shown will not result in nuisance tripping or premature motor failure. Unit warranty will not be affected.
7. Interpolation is permissible. Do not extrapolate.

## Table 19 — Fan Performance, 48TF012 — Vertical Discharge Units (English)

| AIRFLOW (Cfm) | EXTERNAL STATIC PRESSURE (in. wg) | | | | | | | | | |
|---|---|---|---|---|---|---|---|---|---|---|
| | 0.2 | | 0.4 | | 0.6 | | 0.8 | | 1.0 | |
| | Rpm | Bhp | Rpm | Bhp | Rpm | Bhp | Rpm | Bhp | Rpm | Bhp |
| **3000** | 592 | 0.76 | 661 | 0.93 | 722 | 1.09 | 779 | 1.26 | **829** | **1.42** |
| **3100** | 607 | 0.83 | 676 | 1.01 | 734 | 1.17 | **791** | **1.34** | **840** | **1.51** |
| **3200** | 622 | 0.90 | 690 | 1.09 | 746 | 1.25 | **803** | **1.43** | **852** | **1.60** |
| **3300** | 638 | 0.98 | 705 | 1.17 | 759 | 1.33 | **815** | **1.52** | **864** | **1.70** |
| **3400** | 653 | 1.06 | 719 | 1.26 | 772 | 1.43 | **826** | **1.62** | **876** | **1.81** |
| **3500** | 669 | 1.15 | 733 | 1.35 | **786** | **1.53** | **838** | **1.72** | **888** | **1.91** |
| **3600** | 684 | 1.24 | 747 | 1.44 | **800** | **1.64** | **850** | **1.82** | **900** | **2.03** |
| **3700** | 700 | 1.33 | 760 | 1.54 | **814** | **1.75** | **863** | **1.92** | **912** | **2.14** |
| **3800** | 715 | 1.43 | 774 | 1.64 | **828** | **1.86** | **875** | **2.04** | **924** | **2.26** |
| **3900** | 731 | 1.54 | **787** | **1.74** | **843** | **1.98** | **888** | **2.16** | **936** | **2.30** |
| **4000** | 747 | 1.65 | **801** | **1.85** | **857** | **2.10** | **902** | **2.30** | 948 | 2.51 |
| **4100** | 763 | 1.76 | **816** | **1.97** | **872** | **2.23** | 916 | 2.44 | 960 | 2.64 |
| **4200** | 778 | 1.88 | **831** | **2.10** | **886** | **2.36** | 929 | 2.58 | 972 | 2.78 |
| **4300** | **794** | **2.00** | **846** | **2.23** | 900 | 2.50 | 943 | 2.73 | 985 | 2.93 |
| **4400** | **810** | **2.13** | **861** | **2.37** | 913 | 2.64 | 958 | 2.89 | 999 | 3.09 |
| **4500** | **826** | **2.27** | 876 | 2.52 | 927 | 2.78 | 973 | 3.04 | 1012 | 3.26 |
| **4600** | 842 | 2.41 | 892 | 2.67 | 940 | 2.92 | 987 | 3.21 | — | — |
| **4700** | 858 | 2.55 | 907 | 2.83 | 954 | 3.08 | 1002 | 3.38 | — | — |
| **4800** | 874 | 2.70 | 922 | 2.99 | 968 | 3.24 | — | — | — | — |
| **4900** | 890 | 2.86 | 938 | 3.16 | — | — | — | — | — | — |
| **5000** | 906 | 3.03 | 953 | 3.33 | — | — | — | — | — | — |

| AIRFLOW (Cfm) | EXTERNAL STATIC PRESSURE (in. wg) | | | | | | | | | |
|---|---|---|---|---|---|---|---|---|---|---|
| | 1.2 | | 1.4 | | 1.6 | | 1.8 | | 2.0 | |
| | Rpm | Bhp | Rpm | Bhp | Rpm | Bhp | Rpm | Bhp | Rpm | Bhp |
| **3000** | **880** | **1.58** | **924** | **1.73** | **970** | **1.89** | **1019** | **2.00** | **1066** | **2.30** |
| **3100** | **890** | **1.68** | **935** | **1.84** | **977** | **2.00** | **1026** | **2.17** | 1070 | 2.44 |
| **3200** | **900** | **1.77** | **946** | **1.95** | **987** | **2.11** | **1029** | **2.28** | 1075 | 2.51 |
| **3300** | **910** | **1.88** | **957** | **2.06** | **998** | **2.23** | **1037** | **2.40** | 1082 | 2.58 |
| **3400** | **921** | **1.98** | **967** | **2.17** | **1009** | **2.35** | 1047 | 2.53 | 1087 | 2.70 |
| **3500** | **933** | **2.10** | **976** | **2.29** | 1020 | 2.48 | 1058 | 2.66 | 1095 | 2.84 |
| **3600** | **945** | **2.22** | 986 | 2.41 | 1030 | 2.61 | 1069 | 2.80 | 1106 | 2.98 |
| **3700** | **957** | **2.34** | 998 | 2.54 | 1039 | 2.74 | 1081 | 2.94 | 1117 | 3.13 |
| **3800** | 969 | 2.47 | 1010 | 2.67 | 1049 | 2.87 | 1091 | 3.08 | 1128 | 3.29 |
| **3900** | 981 | 2.60 | 1022 | 2.81 | 1060 | 3.02 | 1100 | 3.23 | — | — |
| **4000** | 993 | 2.74 | 1034 | 2.96 | 1072 | 3.17 | 1110 | 3.38 | — | — |
| **4100** | 1005 | 2.88 | 1046 | 3.11 | 1084 | 3.32 | — | — | — | — |
| **4200** | 1016 | 3.03 | 1058 | 3.26 | — | — | — | — | — | — |
| **4300** | 1028 | 3.17 | — | — | — | — | — | — | — | — |
| **4400** | 1040 | 3.32 | — | — | — | — | — | — | — | — |
| **4500** | — | — | — | — | — | — | — | — | — | — |
| **4600** | — | — | — | — | — | — | — | — | — | — |
| **4700** | — | — | — | — | — | — | — | — | — | — |
| **4800** | — | — | — | — | — | — | — | — | — | — |
| **4900** | — | — | — | — | — | — | — | — | — | — |
| **5000** | — | — | — | — | — | — | — | — | — | — |

LEGEND

**Bhp** — Brake Horsepower at Motor Shaft
**Rpm** — Revolutions Per Minute of Blower Wheel

NOTES:
1. **Boldface** indicates field-supplied drive required. (See Note 5.)
2. ▬ indicates field-supplied motor and drive are required.
3. Values include losses for filters, unit casing, and wet coils.
4. Use of a field-supplied motor may affect wire sizing. Contact your Carrier representative to verify.
5. Standard drive range is 571 to 779 rpm. All other speeds require a field-supplied drive.
6. Maximum continuous bhp is 2.4. Extensive motor and electrical testing on these units ensures that the full range of the motor can be utilized with confidence. Using the fan motors up to the ratings shown will not result in nuisance tripping or premature motor failure. Unit warranty will not be affected.
7. Interpolation is permissible. Do not extrapolate.

## Table 20 — Fan Performance, 48TF014 — Vertical Discharge Units (English)

| AIRFLOW (Cfm) | EXTERNAL STATIC PRESSURE (in. wg) | | | | | | | | | |
|---|---|---|---|---|---|---|---|---|---|---|
| | 0.2 | | 0.4 | | 0.6 | | 0.8 | | 1.0 | |
| | Rpm | Bhp | Rpm | Bhp | Rpm | Bhp | Rpm | Bhp | Rpm | Bhp |
| **3700** | 729 | 1.36 | 790 | 1.58 | 847 | 1.79 | **902** | **2.06** | **955** | **2.29** |
| **3800** | 745 | 1.46 | 805 | 1.69 | 861 | 1.89 | **915** | **2.17** | **967** | **2.41** |
| **3900** | 761 | 1.56 | 820 | 1.80 | 875 | 2.02 | **928** | **2.29** | **979** | **2.55** |
| **4000** | 777 | 1.67 | 836 | 1.92 | 889 | 2.14 | **941** | **2.40** | **991** | **2.68** |
| **4100** | 793 | 1.79 | 851 | 2.05 | **904** | **2.27** | **955** | **2.42** | **1004** | **2.82** |
| **4200** | 810 | 1.91 | 867 | 2.18 | **918** | **2.41** | **968** | **2.54** | **1017** | **2.96** |
| **4300** | 826 | 2.04 | 883 | 2.32 | **933** | **2.55** | **982** | **2.79** | **1030** | **3.11** |
| **4400** | 842 | 2.17 | 898 | 2.46 | **948** | **2.70** | **996** | **2.93** | **1043** | **3.25** |
| **4500** | 859 | 2.31 | **914** | **2.60** | **962** | **2.85** | **1010** | **3.09** | **1056** | **3.40** |
| **4600** | 876 | 2.46 | **930** | **2.76** | **977** | **3.01** | **1024** | **3.26** | **1070** | **3.55** |
| **4700** | 892 | 2.60 | **945** | **2.91** | **992** | **3.18** | **2039** | **3.43** | 1083 | 3.71 |
| **4800** | **909** | **2.77** | **961** | **3.07** | **1008** | **3.36** | **1053** | **3.61** | 1097 | 3.88 |
| **4900** | **926** | **2.93** | **977** | **3.24** | **1024** | **3.54** | 1068 | 3.80 | 1111 | 4.06 |
| **5000** | **942** | **3.11** | **993** | **3.41** | 1039 | 3.73 | 1080 | 3.90 | 1126 | 4.25 |
| **5100** | **959** | **3.29** | **1009** | **3.60** | 1055 | 3.92 | 1097 | 4.19 | 1139 | 4.46 |
| **5200** | **976** | **3.47** | 1025 | 3.78 | 1071 | 4.12 | 1112 | 4.40 | 1153 | 4.67 |
| **5300** | **993** | **3.67** | 1041 | 3.98 | 1086 | 4.33 | 1127 | 4.61 | 1168 | 4.90 |
| **5400** | 1010 | 3.87 | 1057 | 4.18 | 1102 | 4.54 | 1142 | 4.84 | 1182 | 5.13 |
| **5500** | 1027 | 4.07 | 1073 | 4.39 | 1118 | 4.76 | 1157 | 5.07 | 1197 | 5.36 |
| **5600** | 1043 | 4.29 | 1090 | 4.61 | 1133 | 4.99 | 1173 | 5.31 | 1211 | 5.61 |
| **5700** | 1060 | 4.51 | 1106 | 4.83 | 1149 | 5.22 | 1189 | 5.55 | — | — |
| **5800** | 1077 | 4.74 | 1122 | 5.07 | 1165 | 5.46 | — | — | — | — |
| **5900** | 1094 | 4.98 | 1139 | 5.41 | 1181 | 5.70 | — | — | — | — |
| **6000** | 1111 | 5.22 | 1155 | 5.55 | — | — | — | — | — | — |
| **6100** | 1128 | 5.48 | — | — | — | — | — | — | — | — |
| **6200** | 1145 | 5.74 | — | — | — | — | — | — | — | — |

| AIRFLOW (Cfm) | EXTERNAL STATIC PRESSURE (in. wg) | | | | | | | | | |
|---|---|---|---|---|---|---|---|---|---|---|
| | 1.2 | | 1.4 | | 1.6 | | 1.8 | | 2.0 | |
| | Rpm | Bhp | Rpm | Bhp | Rpm | Bhp | Rpm | Bhp | Rpm | Bhp |
| **3700** | **1008** | **2.55** | **1060** | **2.80** | **1108** | **3.05** | **1152** | **3.27** | **1190** | **3.46** |
| **3800** | **1019** | **2.67** | **1070** | **2.94** | **1118** | **3.19** | **1163** | **3.44** | **1203** | **3.65** |
| **3900** | **1029** | **2.80** | **1079** | **3.07** | **1128** | **3.34** | **1173** | **3.60** | 1214 | 3.83 |
| **4000** | **1040** | **2.94** | **1089** | **3.22** | **1137** | **3.49** | 1183 | 3.76 | 1225 | 4.00 |
| **4100** | **1052** | **3.08** | **1100** | **3.36** | **1147** | **3.65** | 1193 | 3.93 | 1236 | 4.19 |
| **4200** | **1064** | **3.23** | **1110** | **3.51** | 1157 | 3.81 | 1202 | 4.09 | 1245 | 4.38 |
| **4300** | **1076** | **3.40** | **1121** | **3.67** | 1167 | 3.97 | 1212 | 4.27 | 1255 | 4.56 |
| **4400** | **1088** | **3.56** | 1133 | 3.84 | 1178 | 4.14 | 1222 | 4.44 | 1265 | 4.74 |
| **4500** | 1101 | 3.73 | 1144 | 4.00 | 1188 | 4.31 | 1232 | 4.62 | 1274 | 4.93 |
| **4600** | 1114 | 3.90 | 1157 | 4.19 | 1199 | 4.49 | 1242 | 4.81 | 1284 | 5.13 |
| **4700** | 1126 | 4.07 | 1169 | 4.38 | 1210 | 4.68 | 1252 | 5.00 | 1294 | 5.33 |
| **4800** | 1140 | 4.25 | 1181 | 4.58 | 1222 | 4.87 | 1263 | 5.20 | — | — |
| **4900** | 1153 | 4.41 | 1194 | 4.77 | 1234 | 5.09 | 1274 | 5.40 | — | — |
| **5000** | 1166 | 4.59 | 1207 | 4.97 | 1247 | 5.30 | 1286 | 5.62 | — | — |
| **5100** | 1180 | 4.78 | 1220 | 5.18 | 1259 | 5.52 | — | — | — | — |
| **5200** | 1194 | 4.98 | 1233 | 5.38 | 1272 | 5.74 | — | — | — | — |
| **5300** | 1208 | 5.19 | 1246 | 5.58 | — | — | — | — | — | — |
| **5400** | 1221 | 5.41 | — | — | — | — | — | — | — | — |
| **5500** | 1235 | 5.64 | — | — | — | — | — | — | — | — |
| **5600** | — | — | — | — | — | — | — | — | — | — |
| **5700** | — | — | — | — | — | — | — | — | — | — |
| **5800** | — | — | — | — | — | — | — | — | — | — |
| **5900** | — | — | — | — | — | — | — | — | — | — |
| **6000** | — | — | — | — | — | — | — | — | — | — |
| **6100** | — | — | — | — | — | — | — | — | — | — |
| **6200** | — | — | — | — | — | — | — | — | — | — |

LEGEND

**Bhp** — Brake Horsepower at Motor Shaft
**Rpm** — Revolutions Per Minute of Blower Wheel

NOTES:
1. **Boldface** indicates field-supplied drive required. (See Note 5.)
2. ▒ indicates field-supplied motor and drive are required.
3. Values include losses for filters, unit casing, and wet coils.
4. Use of a field-supplied motor may affect wire sizing. Contact your Carrier representative to verify.
5. Standard drive range is 717 to 900 rpm. All other rpms require a field-supplied drive.
6. Maximum continuous bhp is 3.7. Extensive motor and electrical testing on these units ensures that the full range of the motor can be utilized with confidence. Using the fan motors up to the ratings shown will not result in nuisance tripping or premature motor failure. Unit warranty will not be affected.
7. Interpolation is permissible. Do not extrapolate.

## Table 21 — Fan Performance, 48TF008 — Horizontal Discharge Units (English)

| AIRFLOW (Cfm) | EXTERNAL STATIC PRESSURE (in. wg) | | | | | | | | | |
|---|---|---|---|---|---|---|---|---|---|---|
| | 0.2 | | 0.4 | | 0.6 | | 0.8 | | 0.9 | |
| | Rpm | Bhp | Rpm | Bhp | Rpm | Bhp | Rpm | Bhp | Rpm | Bhp |
| **2200** | 499 | 0.50 | 580 | 0.70 | 652 | 0.94 | **717** | **1.17** | **748** | **1.30** |
| **2250** | 507 | 0.53 | 586 | 0.73 | 658 | 0.97 | **722** | **1.22** | **752** | **1.34** |
| **2300** | 513 | 0.55 | 592 | 0.76 | 663 | 1.00 | **727** | **1.26** | **756** | **1.38** |
| **2400** | 528 | 0.60 | 606 | 0.83 | 674 | 1.06 | **738** | **1.34** | **766** | **1.46** |
| **2500** | 542 | 0.66 | 619 | 0.90 | 686 | 1.13 | **748** | **1.41** | **777** | **1.55** |
| **2550** | 550 | 0.69 | 627 | 0.94 | 692 | 1.17 | **754** | **1.45** | **783** | **1.60** |
| **2600** | 557 | 0.72 | 634 | 0.97 | 698 | 1.21 | **759** | **1.49** | **787** | **1.64** |
| **2700** | 573 | 0.79 | 648 | 1.05 | **711** | **1.29** | **770** | **1.58** | **798** | **1.73** |
| **2800** | 588 | 0.86 | 662 | 1.13 | **723** | **1.38** | **782** | **1.66** | **809** | **1.82** |
| **2900** | 604 | 0.94 | 676 | 1.21 | **737** | **1.48** | **794** | **1.76** | **821** | **1.92** |
| **3000** | 620 | 1.02 | 690 | 1.30 | **750** | **1.58** | **806** | **1.86** | **832** | **2.02** |
| **3100** | 636 | 1.11 | **704** | **1.39** | **764** | **1.69** | **818** | **1.97** | **844** | **2.13** |
| **3200** | 652 | 1.21 | **718** | **1.49** | **778** | **1.80** | **831** | **2.09** | **856** | **2.25** |
| **3300** | 668 | 1.31 | **732** | **1.59** | **793** | **1.92** | **844** | **2.21** | **869** | **2.37** |
| **3400** | 684 | 1.41 | **747** | **1.70** | **807** | **2.04** | **857** | **2.35** | 882 | 2.51 |
| **3500** | **701** | **1.53** | **762** | **1.82** | **821** | **2.16** | 871 | 2.48 | 895 | 2.64 |
| **3600** | **717** | **1.65** | **777** | **1.94** | **835** | **2.29** | 885 | 2.63 | 908 | 2.79 |
| **3700** | **733** | **1.77** | **792** | **2.07** | 849 | 2.42 | 899 | 2.78 | 922 | 2.95 |
| **3750** | **742** | **1.84** | **800** | **2.14** | 856 | 2.49 | 907 | 2.86 | 929 | 3.03 |

| AIRFLOW (Cfm) | EXTERNAL STATIC PRESSURE (in. wg) | | | | | | | |
|---|---|---|---|---|---|---|---|---|
| | 1.0 | | 1.2 | | 1.4 | | 1.6 | |
| | Rpm | Bhp | Rpm | Bhp | Rpm | Bhp | Rpm | Bhp |
| **2200** | **779** | **1.43** | **839** | **1.78** | **905** | **2.21** | 951 | 2.57 |
| **2250** | **783** | **1.46** | **843** | **1.81** | **908** | **2.25** | 955 | 2.59 |
| **2300** | **786** | **1.49** | **846** | **1.84** | **910** | **2.25** | 959 | 2.61 |
| **2400** | **795** | **1.58** | **853** | **1.88** | **912** | **2.31** | 967 | 2.68 |
| **2500** | **806** | **1.68** | **859** | **1.94** | **919** | **2.37** | 971 | 2.73 |
| **2550** | **812** | **1.74** | **864** | **1.99** | **920** | **2.39** | 974 | 2.76 |
| **2600** | **816** | **1.79** | **868** | **2.04** | 921 | 2.41 | 976 | 2.78 |
| **2700** | **827** | **1.88** | **878** | **2.16** | 928 | 2.45 | 983 | 2.88 |
| **2800** | **837** | **1.98** | **889** | **2.29** | 937 | 2.57 | 986 | 2.91 |
| **2900** | **848** | **2.08** | 900 | 2.41 | 947 | 2.70 | 993 | 3.01 |
| **3000** | **849** | **2.18** | 910 | 2.52 | 958 | 2.85 | 1002 | 3.15 |
| **3100** | **870** | **2.29** | 920 | 2.64 | 968 | 2.99 | 1012 | 3.30 |
| **3200** | **882** | **2.40** | 931 | 2.76 | 979 | 3.13 | 1023 | 3.47 |
| **3300** | 894 | 2.53 | 942 | 2.89 | 989 | 3.26 | 1034 | 3.63 |
| **3400** | 907 | 2.66 | 954 | 3.02 | 1000 | 3.40 | 1044 | 3.79 |
| **3500** | 919 | 2.80 | 966 | 3.15 | 1011 | 3.55 | 1054 | 3.94 |
| **3600** | 932 | 2.95 | 978 | 3.30 | 1022 | 3.69 | 1065 | 4.10 |
| **3700** | 945 | 3.11 | 990 | 3.45 | 1034 | 3.84 | 1076 | 4.28 |
| **3750** | 952 | 3.20 | 997 | 3.54 | 1040 | 3.93 | 1082 | 5.27 |

LEGEND

**Bhp** — Brake Horsepower at Motor Shaft
**Rpm** — Revolutions Per Minute of Blower Wheel

NOTES:
1. **Boldface** indicates field-supplied drive required. (See Note 5.)
2. ▬ indicates field-supplied motor and drive are required.
3. Values include losses for filters, unit casing, and wet coils.
4. Use of a field-supplied motor may affect wire sizing. Contact your Carrier representative to verify.
5. Standard drive range is 492 to 700 rpm. All other rpms require a field-supplied drive.
6. Maximum continuous bhp is 2.4. Extensive motor and electrical testing on these units ensures that the full range of the motor can be utilized with confidence. Using the fan motors up to the ratings shown will not result in nuisance tripping or premature motor failure. Unit warranty will not be affected.
7. Interpolation is permissible. Do not extrapolate.

## Table 22 — Fan Performance, 48TF012 — Horizontal Discharge Units (English)

| AIRFLOW (Cfm) | EXTERNAL STATIC PRESSURE (in. wg) | | | | | | | | | |
|---|---|---|---|---|---|---|---|---|---|---|
| | 0.2 | | 0.4 | | 0.6 | | 0.8 | | 1.0 | |
| | Rpm | Bhp | Rpm | Bhp | Rpm | Bhp | Rpm | Bhp | Rpm | Bhp |
| **3000** | **552** | **0.68** | 632 | 0.87 | 701 | 1.05 | 761 | 1.22 | **816** | **1.36** |
| **3100** | **565** | **0.74** | 644 | 0.93 | 711 | 1.12 | 772 | 1.31 | **825** | **1.45** |
| **3200** | 578 | 0.81 | 656 | 1.00 | 723 | 1.20 | **782** | **1.39** | **835** | **1.55** |
| **3300** | 591 | 0.88 | 668 | 1.08 | 734 | 1.28 | **793** | **1.47** | **845** | **1.65** |
| **3400** | 605 | 0.96 | 680 | 1.16 | 745 | 1.36 | **803** | **1.56** | **856** | **1.75** |
| **3500** | 619 | 1.04 | 691 | 1.23 | 755 | 1.44 | **813** | **1.65** | **867** | **1.86** |
| **3600** | 633 | 1.13 | 703 | 1.31 | 766 | 1.52 | **824** | **1.74** | **877** | **1.97** |
| **3700** | 648 | 1.23 | 714 | 1.39 | 777 | 1.61 | **835** | **1.85** | **887** | **2.07** |
| **3800** | 662 | 1.33 | 726 | 1.51 | **789** | **1.72** | **846** | **1.95** | **897** | **2.18** |
| **3900** | 677 | 1.44 | 738 | 1.61 | **801** | **1.82** | **857** | **2.06** | **908** | **2.29** |
| **4000** | 692 | 1.55 | 750 | 1.73 | **813** | **1.94** | **868** | **2.17** | **918** | **2.40** |
| **4100** | 707 | 1.67 | 762 | 1.84 | **825** | **2.05** | **878** | **2.28** | 929 | 2.53 |
| **4200** | 722 | 1.80 | 775 | 1.97 | **837** | **2.16** | **889** | **2.40** | 941 | 2.66 |
| **4300** | 737 | 1.94 | **787** | **2.09** | **848** | **2.27** | 900 | 252 | 952 | 2.80 |
| **4400** | 752 | 2.08 | **800** | **2.21** | **860** | **2.39** | 912 | 2.66 | 962 | 2.93 |
| **4500** | 768 | 2.24 | **814** | **2.35** | 871 | 2.51 | 924 | 2.80 | 973 | 3.07 |
| **4600** | **783** | **2.40** | 827 | 2.50 | 883 | 2.64 | 937 | 2.95 | 983 | 3.21 |
| **4700** | 799 | 2.56 | 841 | 2.64 | 894 | 2.77 | 949 | 3.10 | 994 | 3.36 |
| **4800** | 814 | 2.74 | 855 | 2.80 | 906 | 2.91 | 961 | 3.26 | — | — |
| **4900** | — | — | 868 | 2.90 | 918 | 3.05 | 972 | 3.40 | — | — |
| **5000** | — | — | 883 | 3.10 | 931 | 3.21 | — | — | — | — |

| AIRFLOW (Cfm) | EXTERNAL STATIC PRESSURE (in. wg) | | | | | | | | | |
|---|---|---|---|---|---|---|---|---|---|---|
| | 1.2 | | 1.4 | | 1.6 | | 1.8 | | 2.0 | |
| | Rpm | Bhp | Rpm | Bhp | Rpm | Bhp | Rpm | Bhp | Rpm | Bhp |
| **3000** | **871** | **1.54** | **918** | **1.67** | **967** | **1.89** | **1010** | **2.09** | 1063 | 2.46 |
| **3100** | **879** | **1.63** | **928** | **1.78** | **973** | **1.94** | **1018** | **2.17** | 1070 | 2.51 |
| **3200** | **887** | **1.71** | **937** | **1.90** | **981** | **2.04** | **1026** | **2.26** | 1075 | 2.57 |
| **3300** | **895** | **1.80** | **946** | **2.00** | **991** | **2.16** | **1032** | **2.32** | 1080 | 2.64 |
| **3400** | **904** | **1.91** | **953** | **2.10** | **1000** | **2.29** | 1041 | 2.44 | 1083 | 2.65 |
| **3500** | **914** | **2.03** | **961** | **2.20** | 1009 | 2.41 | 1051 | 2.57 | 1090 | 2.74 |
| **3600** | **924** | **2.15** | **970** | **2.32** | 1017 | 2.53 | 1061 | 2.72 | 1099 | 2.88 |
| **3700** | **935** | **2.28** | 980 | 2.45 | 1024 | 2.64 | 1069 | 2.87 | 1109 | 3.03 |
| **3800** | **946** | **2.40** | 989 | 2.58 | 1033 | 2.76 | 1077 | 2.99 | 1118 | 3.20 |
| **3900** | 956 | 2.53 | 1000 | 2.73 | 1042 | 2.91 | 1085 | 3.12 | 1127 | 3.36 |
| **4000** | 967 | 2.66 | 1010 | 2.87 | 1052 | 3.06 | 1093 | 3.24 | — | — |
| **4100** | 977 | 2.78 | 1021 | 3.02 | 1062 | 3.22 | 1102 | 3.41 | — | — |
| **4200** | 987 | 2.91 | 1032 | 3.17 | 1072 | 3.38 | — | — | — | — |
| **4300** | 999 | 3.04 | 1042 | 3.32 | — | — | — | — | — | — |
| **4400** | 1008 | 3.19 | — | — | — | — | — | — | — | — |
| **4500** | 1019 | 3.34 | — | — | — | — | — | — | — | — |
| **4600** | — | — | — | — | — | — | — | — | — | — |
| **4700** | — | — | — | — | — | — | — | — | — | — |
| **4800** | — | — | — | — | — | — | — | — | — | — |
| **4900** | — | — | — | — | — | — | — | — | — | — |
| **5000** | — | — | — | — | — | — | — | — | — | — |

LEGEND

**Bhp** — Brake Horsepower at Motor Shaft
**Rpm** — Revolutions Per Minute of Blower Wheel

NOTES:
1. **Boldface** indicates field-supplied drive required. (See Note 5.)
2. ▒ indicates field-supplied motor and drive are required.
3. Values include losses for filters, unit casing, and wet coils.
4. Use of a field-supplied motor may affect wire sizing. Contact your Carrier representative to verify.
5. Standard drive range is 571 to 779 rpm. All other rpms require a field-supplied drive.
6. Maximum continuous bhp is 2.4. Extensive motor and electrical testing on these units ensures that the full range of the motor can be utilized with confidence. Using the fan motors up to the ratings shown will not result in nuisance tripping or premature motor failure. Unit warranty will not be affected.
7. Interpolation is permissible. Do not extrapolate.

## Table 23 — Fan Performance, 48TF014 — Horizontal Discharge Units (English)

| AIRFLOW (Cfm) | EXTERNAL STATIC PRESSURE (in. wg) | | | | | | | | | |
|---|---|---|---|---|---|---|---|---|---|---|
| | 0.2 | | 0.4 | | 0.6 | | 0.8 | | 1.0 | |
| | Rpm | Bhp | Rpm | Bhp | Rpm | Bhp | Rpm | Bhp | Rpm | Bhp |
| 3700 | **677** | **1.20** | 748 | 1.43 | 810 | 1.65 | 869 | 1.89 | **928** | **2.17** |
| 3800 | **691** | **1.28** | 761 | 1.52 | 822 | 1.75 | 880 | 1.98 | **937** | **2.28** |
| 3900 | **705** | **1.37** | 773 | 1.62 | 834 | 1.86 | 891 | 2.08 | **947** | **2.39** |
| 4000 | 720 | 1.47 | 786 | 1.71 | 847 | 1.97 | **902** | **2.19** | **956** | **2.50** |
| 4100 | 734 | 1.56 | 800 | 1.82 | 860 | 2.09 | **914** | **2.31** | **967** | **2.60** |
| 4200 | 749 | 1.66 | 813 | 1.92 | 873 | 2.21 | **926** | **2.44** | **978** | **2.71** |
| 4300 | 764 | 1.77 | 826 | 2.04 | 886 | 2.33 | **938** | **2.57** | **989** | **2.83** |
| 4400 | 779 | 1.88 | 840 | 2.16 | 899 | 2.46 | **951** | **2.71** | **1000** | **2.96** |
| 4500 | 793 | 1.99 | 854 | 2.28 | **912** | **2.59** | **963** | **2.86** | **1012** | **3.09** |
| 4600 | 808 | 2.11 | 868 | 2.42 | **925** | **2.73** | **975** | **3.00** | **1024** | **3.25** |
| 4700 | 822 | 2.24 | 882 | 2.56 | **937** | **2.86** | **988** | **3.16** | **1036** | **3.42** |
| 4800 | 837 | 2.37 | 896 | 2.71 | **950** | **3.00** | **1001** | **3.32** | **1048** | **3.59** |
| 4900 | 852 | 2.51 | **910** | **2.86** | **963** | **3.15** | **1014** | **3.48** | 1060 | 3.76 |
| 5000 | 867 | 2.65 | **924** | **3.01** | **977** | **3.30** | **1027** | **3.65** | 1073 | 3.94 |
| 5100 | 882 | 2.79 | **938** | **3.17** | **990** | **3.46** | 1040 | 3.82 | 1085 | 4.12 |
| 5200 | 896 | 2.95 | **952** | **3.33** | **1003** | **3.63** | 1053 | 4.00 | 1098 | 4.30 |
| 5300 | **911** | **3.11** | **967** | **3.50** | 1017 | 3.80 | 1066 | 4.18 | 1111 | 4.50 |
| 5400 | **926** | **3.27** | **981** | **3.68** | 1030 | 3.98 | 1079 | 4.35 | 1124 | 4.70 |
| 5500 | **940** | **3.44** | 995 | 3.86 | 1044 | 4.17 | 1092 | 4.54 | 1137 | 4.91 |
| 5600 | **955** | **3.62** | 1010 | 4.04 | 1058 | 4.38 | 1105 | 4.73 | 1150 | 5.12 |
| 5700 | 970 | 3.80 | 1024 | 4.23 | 1072 | 4.59 | 1118 | 4.93 | 1163 | 5.34 |
| 5800 | 985 | 3.99 | 1039 | 4.42 | 1086 | 4.80 | 1131 | 5.14 | 1176 | 5.56 |
| 5900 | 1000 | 4.18 | 1053 | 4.62 | 1100 | 5.02 | 1144 | 5.36 | — | — |
| 6000 | 1015 | 4.39 | 1068 | 4.83 | 1114 | 5.25 | 1158 | 5.58 | — | — |
| 6100 | 1030 | 4.59 | 1083 | 5.04 | 1128 | 5.48 | — | — | — | — |
| 6200 | 1046 | 4.81 | 1097 | 5.26 | 1142 | 5.71 | — | — | — | — |

| AIRFLOW (Cfm) | EXTERNAL STATIC PRESSURE (in. wg) | | | | | | | | | |
|---|---|---|---|---|---|---|---|---|---|---|
| | 1.2 | | 1.4 | | 1.6 | | 1.8 | | 2.0 | |
| | Rpm | Bhp | Rpm | Bhp | Rpm | Bhp | Rpm | Bhp | Rpm | Bhp |
| 3700 | **984** | **2.43** | **1036** | **2.68** | **1080** | **2.90** | **1114** | **3.07** | **1135** | **3.17** |
| 3800 | **993** | **2.55** | **1046** | **2.81** | **1092** | **3.05** | **1129** | **3.25** | **1156** | **3.39** |
| 3900 | **1002** | **2.66** | **1055** | **2.94** | **1102** | **3.20** | **1143** | **3.42** | **1174** | **3.59** |
| 4000 | **1011** | **2.79** | **1064** | **3.07** | **1112** | **3.34** | **1155** | **3.59** | 1190 | 3.80 |
| 4100 | **1021** | **2.91** | **1072** | **3.20** | **1121** | **3.49** | 1165 | 3.76 | 1203 | 3.99 |
| 4200 | **1030** | **3.04** | **1081** | **3.34** | **1130** | **3.64** | 1175 | 3.92 | 1215 | 4.18 |
| 4300 | **1040** | **3.18** | **1090** | **3.48** | 1139 | 3.79 | 1185 | 4.08 | 1226 | 4.36 |
| 4400 | **1050** | **3.31** | **1100** | **3.63** | 1148 | 3.94 | 1194 | 4.25 | 1236 | 4.54 |
| 4500 | **1061** | **3.43** | 1109 | 3.78 | 1156 | 4.09 | 1203 | 4.42 | 1246 | 4.72 |
| 4600 | **1071** | **3.56** | 1119 | 3.93 | 1166 | 4.26 | 1212 | 4.58 | 1255 | 4.91 |
| 4700 | **1082** | **3.70** | 1129 | 4.09 | 1175 | 4.43 | 1221 | 4.76 | 1264 | 5.09 |
| 4800 | 1093 | 3.86 | 1139 | 4.24 | 1185 | 4.60 | 1230 | 4.93 | 1273 | 5.28 |
| 4900 | 1105 | 4.02 | 1150 | 4.38 | 1194 | 4.77 | 1239 | 5.12 | 1282 | 5.47 |
| 5000 | 1117 | 4.20 | 1161 | 4.54 | 1204 | 4.95 | 1248 | 5.31 | 1291 | 5.66 |
| 5100 | 1129 | 4.40 | 1172 | 4.71 | 1214 | 5.13 | 1257 | 5.61 | — | — |
| 5200 | 1141 | 4.60 | 1183 | 4.91 | 1225 | 5.29 | 1267 | 5.70 | — | — |
| 5300 | 1153 | 4.80 | 1194 | 5.08 | 1236 | 5.47 | — | — | — | — |
| 5400 | 1166 | 5.01 | 1206 | 5.29 | 1247 | 5.65 | — | — | — | — |
| 5500 | 1178 | 5.22 | 1218 | 5.52 | — | — | — | — | — | — |
| 5600 | 1190 | 5.44 | 1230 | 5.75 | — | — | — | — | — | — |
| 5700 | 1203 | 5.67 | — | — | — | — | — | — | — | — |
| 5800 | — | — | — | — | — | — | — | — | — | — |
| 5900 | — | — | — | — | — | — | — | — | — | — |
| 6000 | — | — | — | — | — | — | — | — | — | — |
| 6100 | — | — | — | — | — | — | — | — | — | — |
| 6200 | — | — | — | — | — | — | — | — | — | — |

LEGEND

**Bhp** — Brake Horsepower at Motor Shaft
**Rpm** — Revolutions Per Minute of Blower Wheel

NOTES:
1. **Boldface** indicates field-supplied drive required. (See Note 5.)
2. ▒ indicates field-supplied motor and drive are required.
3. Values include losses for filters, unit casing, and wet coils.
4. Use of a field-supplied motor may affect wire sizing. Contact your Carrier representative to verify.
5. Standard drive range is 717 to 900 rpm. All other rpms require a field-supplied drive.
6. Maximum continuous bhp is 3.7. Extensive motor and electrical testing on these units ensures that the full range of the motor can be utilized with confidence. Using the fan motors up to the ratings shown will not result in nuisance tripping or premature motor failure. Unit warranty will not be affected.
7. Interpolation is permissible. Do not extrapolate.

## START-UP

**Unit Preparation —** Make sure that unit has been installed in accordance with these installation instructions and applicable codes. Make sure that Start-Up Checklist, located on back page of this booklet, has been completed and filled out.

**Return-Air Filters —** Make sure correct filters are installed in filter tracks (see Tables 1A and 1B). Do not operate unit without return-air filters.

**Outdoor-Air Inlet Screens —** Outdoor-air inlet screens must be in place before operating unit.

**Compressor Mounting —** Compressors are internally spring mounted. Do not loosen or remove compressor hold-down bolts. On 48TF014 units, remove the tiedown bands that hold the compressors together.

**Internal Wiring —** Check all electrical connections in unit control boxes. Tighten as required. Ensure wiring does not come into direct contact with refrigerant tubing.

**Refrigerant Service Ports —** Each refrigerant system has 4 Schrader-type service gage ports: one on the suction line, one on the liquid line, and two on the compressor discharge line. Be sure that caps on the ports are tight. One Schrader-type valve is located under both the high-pressure switch and the low-pressure switch when ordered as an option.

**High Flow Valves —** Located on the compressor hot gas and suction tubes are High Flow Valves. Large black plastic caps distinguish these valves with O-rings located inside the caps. These valves cannot be accessed for service in the field. Ensure the plastic caps are in place and tight or the possibility of refrigerant leakage could occur.

**Compressor Rotation —** On 3-phase units with scroll compressors, it is important to be certain compressor is rotating in the proper direction. To determine whether or not compressor is rotating in the proper direction:

1. Connect service gages to suction and discharge pressure fittings.
2. Energize the compressor.
3. The suction pressure should drop and the discharge pressure should rise, as is normal on any start-up.

If the suction pressure does not drop and the discharge pressure does not rise to normal levels:

1. Note that the evaporator fan is probably also rotating in the wrong direction.
2. Turn off power to the unit and install lockout tag.
3. Reverse any two of the unit power leads.
4. Reapply power to unit. Reenergize compressor.

The suction and discharge pressure levels should now move to their normal start-up levels.

NOTE: When the compressor is rotating in the wrong direction, the unit will make an elevated level of noise and will not provide cooling.

**Cooling —** To start unit, turn on main power supply. Set system selector switch at COOL position and fan switch at AUTO. position. Adjust thermostat to a setting below room temperature. Compressor, indoor and outdoor fans start on closure of contactors.

Check unit charge. Refer to Refrigerant Charge section, page 37. Unit must operate a minimum of 15 minutes before adjusting charge.

Reset thermostat at a position above room temperature. Compressor and outdoor fans will shut off. Evaporator fan will shut off after 30-second delay.

TO SHUT OFF UNIT — Set system selector switch at OFF position. Resetting thermostat at a position above room temperature shuts unit off temporarily until space temperature exceeds thermostat setting.

**Main Burners —** Main burners are factory set and should require no adjustment.

TO CHECK ignition of main burners and heating controls, move thermostat set point above room temperature and verify that the burners light and evaporator fan is energized. After ensuring that the unit continues to heat the building, lower the thermostat setting below the room temperature and verify that the burners and evaporator fan turn off (fan will turn off only if fan selector switch is in the AUTO. position). Refer to Table 24 for the correct orifice to use at high altitudes.

NOTE: Upon a call for heat, the main burners will remain on for a minimum of 60 seconds.

ADJUST GAS INPUT — The gas input to the unit is determined by measuring the gas flow at the meter or by measuring the manifold pressure. Manifold pressure should be 872 Pa (3.5 in. wg).

NOTE: Unit uses a 2 stage gas valve. There is no need to adjust the "Low Fire" manifold pressure.

Measure Gas Flow (Natural Gas Units) — Minor adjustment to the gas flow can be made by changing the manifold pressure. The manifold pressure must be 872 Pa (3.5 in wg). Normal manifold pressure is 872 Pa (3.5 in. wg) in high fire, W1 and W2 inputs to gas valve.

Proceed as follows:

1. Turn off gas supply to unit.
2. Remove pipe plug on manifold then connect manometer at this point. Turn on gas to unit. Ensure gas valve is in high fire operation.

Observe manifold pressure and proceed as follows to adjust gas input:

1. Remove cover screw over regulator adjustment screw on gas valve. Ensure gas valve is operating in high fire mode.
2. Turn regulator adjustment screw clockwise to increase gas input, or turn regulator adjustment screw counterclockwise to decrease input. High fire manifold pressure must be 872 Pa (3.5 in. wg).

**⚠ WARNING**

Unsafe operation of the unit may result if manifold pressure is outside 847 to 897 Pa (3.4 to 3.6 in. wg) range. Personal injury or unit damage may result.

3. Replace cover screw cap on gas valve.
4. Turn off gas supply to unit. Remove manometer from pressure tap and replace pipe plug on gas valve. Turn on gas to unit and check for leaks.

### Heating

1. Purge gas supply line of air by opening union ahead of gas valve. When gas odor is detected, tighten union and wait 5 minutes before proceeding.
2. Turn on electrical supply and open manual gas valve.
3. Set system switch selector at HEAT position and fan switch at AUTO. or ON position. Set heating temperature lever above room temperature.
4. The induced-draft motor will start, purging heat exchangers.

5. After a call for heating, the main burners should light within 5 seconds. If the burners do not light, then there is a 22-second delay before another 5-second ignition try. If the burners still do not light, the time delay is repeated. If the burners do not light within 15 minutes, there is a lockout. To reset the control, break the 24 v power to W1.
6. The evaporator-fan motor will turn on 45 seconds after the burners are ignited.
7. The evaporator-fan motor will turn off 45 seconds after the thermostat temperature is satisfied.
8. Adjust airflow to obtain a temperature rise within the range specified on the unit nameplate and in Table 1A or 1B.

**Table 24 — Altitude Compensation***

| ELEVATION m or km (ft) | 31.4, 50.4, AND 59.8 kW (107,000, 172,000 AND 204,000 BTUH NOMINAL INPUT | | 65.6 kW (224,000 BTUH) NOMINAL INPUT | |
|---|---|---|---|---|
| | Natural Gas Orifice Size† | Liquid Propane Orifice Size† | Natural Gas Orifice Size† | Liquid Propane Orifice Size† |
| 0-610 m (0-2,000) | 3.0 (31) | 2.4 (41) | 3.2 (30) | 2.5 (38) |
| 610 m (2,000) | 2.9 (32) | 2.3 (42) | 3.2 (30) | 2.5 (39) |
| 914 m (3,000) | 2.9 (32) | 2.3 (42) | 3.0 (31) | 2.4 (40) |
| 1.22 km (4,000) | 2.9 (32) | 2.3 (42) | 2.9 (32) | 2.4 (41) |
| 1.52 km (5,000) | 2.8 (33) | 2.2 (43) | 2.8 (33) | 2.3 (42) |
| 1.83 km (6,000) | 2.8 (34) | 2.2 (43) | 2.8 (34) | 2.2 (43) |
| 2.13 km (7,000) | 2.8 (35) | 2.1 (44) | 2.8 (35) | 2.2 (43) |
| 2.44 km (8,000) | 2.7 (36) | 2.1 (44) | 2.7 (36) | 2.1 (44) |
| 2.74 km (9,000) | 2.6 (37) | 2.0 (45) | 2.6 (37) | 2.1 (44) |
| 3.05 km (10,000) | 2.5 (38) | 2.0 (46) | 2.5 (38) | 2.0 (45) |
| 3.35 km (11,000) | 2.5 (39) | 1.9 (47) | 2.5 (39) | 2.0 (45) |
| 3.66 km (12,000) | 2.4 (40) | 1.9 (47) | 2.4 (40) | 2.0 (46) |
| 3.96 km (13,000) | 2.4 (41) | 1.9 (48) | 2.4 (41) | 1.9 (47) |
| 4.27 km (14,000) | 2.3 (42) | 1.9 (48) | 2.3 (42) | 1.9 (47) |

*As the height above sea level increases, there is less oxygen. Therefore, heat input rate should be reduced at higher altitudes.
†Orifice available through your local distributor.

## Integrated Gas Controller (IGC) Operation

NOTE: The default value for the evaporator-fan motor ON and OFF delay is 45 seconds. The Integrated Gas Controller (IGC) modifies this value when abnormal limit switch cycles occur. Based upon unit operating conditions, the ON delay can be reduced to 0 seconds and the OFF delay can be extended to 180 seconds.

When one flash of the LED (light-emitting diode) is observed, the evaporator-fan ON/OFF delay has been modified. If the limit switch trips at the start of the heating cycle during the evaporator ON delay, the time period of the ON delay for the next cycle will be 5 seconds less than the time at which the switch tripped. (Example: If the limit switch trips at 30 seconds, the evaporator-fan ON delay for the next cycle will occur at 25 seconds.) To prevent short-cycling, a 5-second reduction will only occur if a minimum of 10 minutes has elapsed since the last call for heating.

The evaporator-fan OFF delay can also be modified. Once the call for heating has ended, there is a 10-minute period during which the modification can occur. If the limit switch trips during this period, the evaporator-fan OFF delay will increase by 15 seconds on the next cycle. A maximum of 9 trips can occur, extending the evaporator-fan OFF delay to 180 seconds. To restore the original default value, reset the power to the unit.

TO SHUT OFF UNIT — Set system selector switch at OFF position. Resetting heating selector lever below room temperature will shut unit off temporarily until space temperature falls below thermostat setting.

**Safety Relief —** A soft-solder joint at the suction line Schrader port provides pressure relief under abnormal temperature and pressure conditions.

**Ventilation (Continuous Fan) —** Set fan and system selector switches at ON and OFF positions, respectively. Evaporator fan operates continuously to provide constant air circulation. When the evaporator-fan selector switch is turned to the OFF position, there is a 30-second delay before the fan turns off.

## Operating Sequence

COOLING, UNITS WITHOUT ECONOMIZER — When thermostat calls for cooling, terminals G and Y1 are energized. The indoor (evaporator) fan contactor (IFC) and compressor contactor no. 1 (C1) are energized, and evaporator-fan motors, compressor no. 1, and both condenser fans start. The condenser-fan motor runs continuously while unit is cooling. If the thermostat calls for a second stage of cooling by energizing Y2, compressor contactor no. 2 (C2) is energized and compressor no. 2 starts.

When the thermostat is satisfied, C1 and C2 are deenergized and the compressors and outdoor (condenser) fan motors (OFM) shut off. After a 30-second delay, the indoor (evaporator) fan motor (IFM) shuts off. If the thermostat fan selector switch is in the ON position, the evaporator motor will run continuously.

HEATING, UNITS WITHOUT ECONOMIZER — When the thermostat calls for heating, terminal W1 is energized. In order to prevent thermostat short-cycling, the unit is locked into the Heating mode for at least 1 minute when W1 is energized. The induced-draft motor (IDM) is then energized and the burner ignition sequence begins. The indoor (evaporator) fan motor (IFM) is energized 45 seconds after a flame is ignited. On units equipped for two stages of heat, when additional heat is needed, W2 is energized and the high-fire solenoid on the main gas valve (MGV) is energized. When the thermostat is satisfied and W1 and W2 are deenergized, the IFM stops after a 45-second time-off delay.

COOLING, UNITS WITH DURABLADE ECONOMIZER — When the outdoor-air temperature is above the OAT (outdoor-air thermostat) setting and the room thermostat calls for cooling, compressor contactor no. 1 is energized to start compressor no. 1 and the outdoor (condenser) fan motor (OFM). The indoor (evaporator) fan motor (IFM) is energized and the economizer damper moves to the minimum position. Upon a further call for cooling, compressor contactor no. 2 will be energized, starting compressor no. 2. After the thermostat is satisfied, the damper moves to the fully closed position when using an auto fan or to the minimum position when using a continuous fan.

When the outdoor-air temperature is below the OAT setting and the thermostat calls for cooling, the economizer dampers move to the minimum position. If the supply-air temperature is above 14 C (57 F), the damper continues to open until it reaches the fully open position or until the supply-air temperature drops below 11 C (52 F).

When the supply-air temperature falls to between 14 C (57 F) and 11 C (52 F), the damper will remain at an intermediate open position. If the supply-air temperature falls below 11 C (52 F), the damper will modulate closed until it reaches the minimum position or until the supply-air temperature is above 11 C (52 F). When the thermostat is satisfied, the damper will move to the fully closed position when using an auto fan or to the minimum position when using a continuous fan.

If the outdoor air alone cannot satisfy the cooling requirements of the conditioned space, economizer cooling is integrated with mechanical cooling, providing second-stage cooling. Compressor no. 1 and the condenser fan will be energized and the position of the economizer damper will be determined by the supply-air temperature. Compressor no. 2 is locked out.

When the second stage of cooling is satisfied, the compressor and OFM will be deenergized. The damper position will be determined by the supply-air temperature.

After a 30-second delay, the IFM shuts off. If the thermostat fan selector switch is in the ON position, the IFM will run continuously.

COOLING UNITS WITH ECONOMI$ER — When the OAT is above the ECON SP set point and the room thermostat calls for Stage 1 cooling (R to G + Y1), the indoor fan motor (IFM) is energized and the EconoMi$er damper modulates to minimum position. The compressor contactor is energized to start the compressor and outdoor-fan motor (OFM). After the thermostat is satisfied, the damper modulates to the fully closed position when the IFM is deenergized.

When the OAT is below the ECON SP setting and the room thermostat calls for Stage 1 cooling (R to G + Y1), the EconoMi$er modulates to the minimum position when the IFM is energized. The EconoMi$er provides Stage 1 of cooling by modulating the return and outdoor air dampers to maintain a 13 C (55 F) supply air set point. If the supply-air temperature (SAT) is greater than 14 C (57 F), the EconoMi$er modulates open, allowing a greater amount of outdoor air to enter the unit. If the SAT drops below 12 C (53 F), the outdoor air damper modulates closed to reduce the amount of outdoor air. When the SAT is between 12 C (53 F) and 14 C (57 F), the EconoMi$er maintains its position.

If outdoor air alone cannot satisfy the cooling requirements of the conditioned space, and the OAT is above the MECH CLG LOCKOUT set point, the EconoMi$er integrates free cooling with mechanical cooling. This is accomplished by the strategies below.

NOTE: Compressors have a two-minute Minimum On, Minimum Off, and interstage delay timer.

1. If Y1 is energized, and the room thermostat calls for Y2 (2-stage thermostat), the compressor and OFM are energized. The position of the EconoMi$er damper is maintained at its current value.
2. If Y1 is energized for more than 20 minutes, and Y2 is not energized (whether or not a 2-stage thermostat is used), the compressor and OFM are energized. The position of the EconoMi$er damper is maintained at its current value.
3. If Y1 is energized, and compressor no. 1 is already energized (see Step 2) and the room thermostat calls for Y2, compressor no. 1 continues to operate. If Y2 remains energized for more than 20 minutes, compressor no. 2 is energized.

NOTE: Compressor no. 2 cannot be energized unless there is a signal for Y2 from the space thermostat.

4. If compressor no. 2 is energized, and the Y2 signal from the thermostat is satisfied, compressors 1 and 2 are deenergized. Re-asserting Y2 will start compressor no. 1 and (after a 20-minute interstage delay) compressor no. 2.
5. If compressor no. 1 is energized and the thermostat is satisfied, compressor no. 1, the OFM, and IFM are deenergized and the EconoMi$er modulates closed.

When the OAT is below the MECH CLG LOCKOUT set point, the compressors remain off.

## SERVICE

**⚠ CAUTION**

When servicing unit, shut off all electrical power to unit to avoid shock hazard or injury from rotating parts.

**Cleaning —** Inspect unit interior at the beginning of each heating and cooling season or more frequently as operating conditions require.

EVAPORATOR COIL — Clean coil as required. Inspect coil at beginning of heating and cooling seasons.

1. Turn unit power off. Remove evaporator coil access panel.
2. If economizer is installed, remove economizer by disconnecting Molex plug and removing economizer mounting screws. Refer to Accessory Economizer Installation Instructions or Optional Economizer sections on pages 12 and 15 for more details.
3. Remove filters from unit.
4. Clean coil using a commercial coil cleaner or dishwasher detergent in a pressurized spray canister. Wash both sides of coil and flush with clean water. For best results, backflush toward return-air section to remove foreign material. Caution should be taken as to not overflow the evaporator drain condensate pan.
5. Flush condensate pan after completion.
6. Reinstall economizer and filters.
7. Reconnect wiring.
8. Replace access panels.

CONDENSER COIL — Inspect coil monthly. Clean condenser coil annually, and as required by location and outdoor-air conditions.

<u>One-Row Coils</u> — Wash coil with commercial cleaner. Clean outer surfaces with a stiff brush in the normal manner. It is not necessary to remove top panel.

<u>2-Row Coils</u> — Clean coil as follows:

1. Turn off unit power.
2. Remove top panel screws on condenser end of unit.
3. Remove condenser coil corner post. See Fig. 45. To hold top panel open, place coil corner post between top panel and center post. See Fig. 46.
4. Remove screws securing coil to center post.
5. Remove fastener holding coil sections together at return end of condenser coil. Carefully separate the outer coil section 3 to 4 in. from the inner coil section. See Fig. 47.
6. Use a water hose or other suitable equipment to flush down between the 2 coil sections to remove dirt and debris. Clean the outer surfaces with a stiff brush in the normal manner.
7. Secure inner and outer coil rows together with a field-supplied fastener.
8. Reposition the outer coil section and remove the coil corner post from between the top panel and center post.
9. Reinstall the coil corner post and replace all screws.

CONDENSATE DRAIN — Check and clean each year at start of cooling season. In winter, keep drain dry or protect against freeze-up.

FILTERS — Clean or replace at start of each heating and cooling season, or more often if operating conditions require it. Replacement filters must be same dimensions as original filters.

BELTS — Adjust belt tension and pulley alignment at least twice a year or more frequently as operating conditions require. Refer to Step 9 — Adjust Evaporator for Fan Speed for procedures.

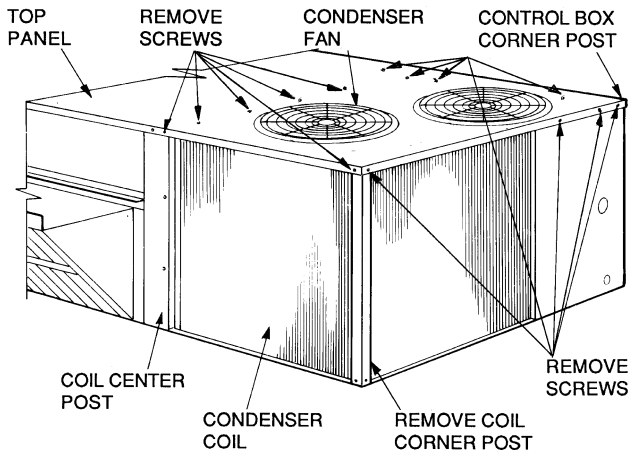


**Fig. 45 — Cleaning Condenser Coil**

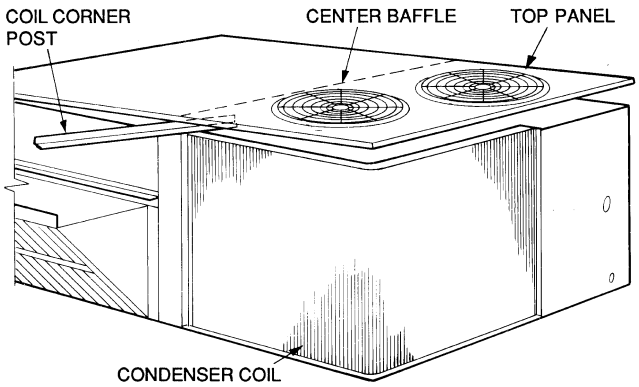


**Fig. 46 — Propping Up Top Panel**

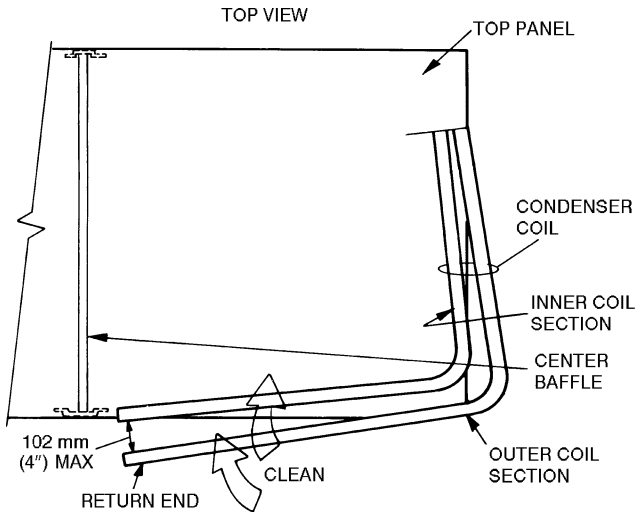


**Fig. 47 — Separating Coil Sections**

## Lubrication

COMPRESSORS — Each compressor is charged with the correct amount of oil at the factory.

FAN-MOTOR BEARINGS — *Fan-motor bearings are of the permanently lubricated type. No further lubrication is required.* No lubrication of condenser- or evaporator-fan motors is required.

## Condenser-Fan Adjustment (Fig. 48)

1. Shut off unit power supply and tag disconnect.
2. Remove condenser-fan assembly (grille, motor, motor cover, and fan) and loosen fan hub setscrews.
3. Adjust fan height as shown in Fig. 48.
4. Tighten setscrews and replace condenser-fan assembly.

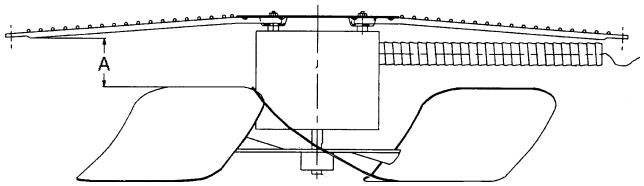


| 48TF UNIT VOLTAGE | FAN HEIGHT "A" (in.) |
|---|---|
| 400 V | 89 (3.50) |

**Fig. 48 — Condenser-Fan Adjustment**

**Manual Outdoor-Air Damper —** If outdoor-air damper blade is required, see Manual Outdoor-Air Damper section on page 12.

**Economizer Adjustment —** Refer to Optional Durablade Economizer section on page 14.

**Condenser Coil Grille —** Condenser coil grille is shipped factory-installed. No adjustments are required.

**Refrigerant Charge —** Amount of refrigerant charge is listed on unit nameplate (also refer to Tables 1A and 1B). Refer to Carrier GTAC 2-5 Charging, Recovery, recycling, and reclamation training manual and the following procedures.

Unit panels must be in place when unit is operating during charging procedure.

NO CHARGE — Use standard evacuating techniques. After evacuating system, weigh in the specified amount of refrigerant (refer to Tables 1A and 1B).

LOW CHARGE COOLING — Using the Cooling Charging Charts, Fig. 49-51 vary refrigerant until the conditions of the appropriate chart are met. Note the charging charts are different from the type normally used. The charts are based on charging the units to the correct superheat for the various operating conditions. Accurate pressure gage and temperature sensing device are required. Connect the pressure gage to the service port on the suction line. Mount the temperature sensing device on the suction line and insulate it so that outdoor ambient temperature does not affect the reading. Indoor-air cfm must be within the normal operating range of the unit.

TO USE COOLING CHARGING CHARTS — Take the outdoor ambient temperature and read the suction pressure gage. Refer to appropriate chart to determine what suction temperature should be. If suction temperature is high, add refrigerant. If suction temperature is low, carefully reclaim some of the charge. Recheck the suction pressure as charge is adjusted. Example (Fig. 51, Circuit 1):

Outdoor Temperature. . . . . .13 C (55 F)
Suction Pressure. . . . . .483 kPa (70 psig)
Suction Temperature should be. . . . . .23 C (74 F)
(Suction temperature may vary ± 3 C [5 F].)

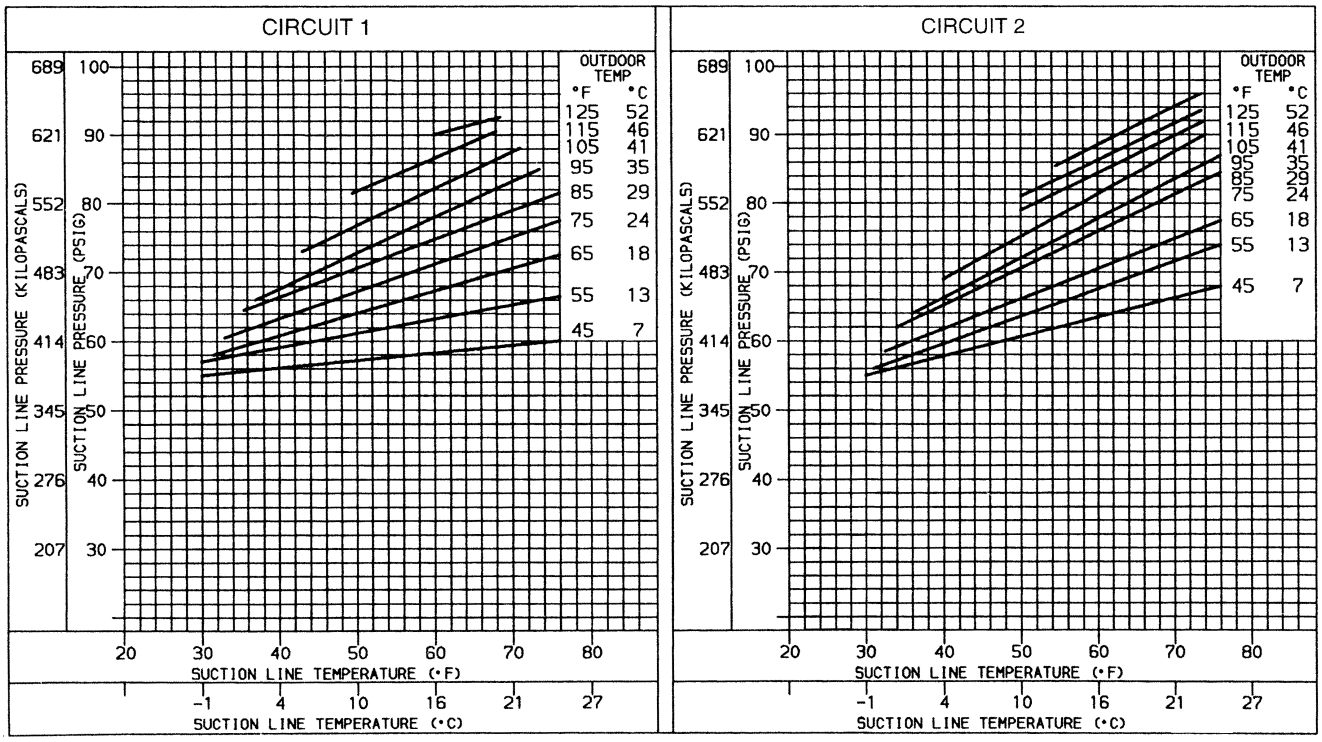


**Fig. 49 — Cooling Charging Charts, 48TF008 Units**

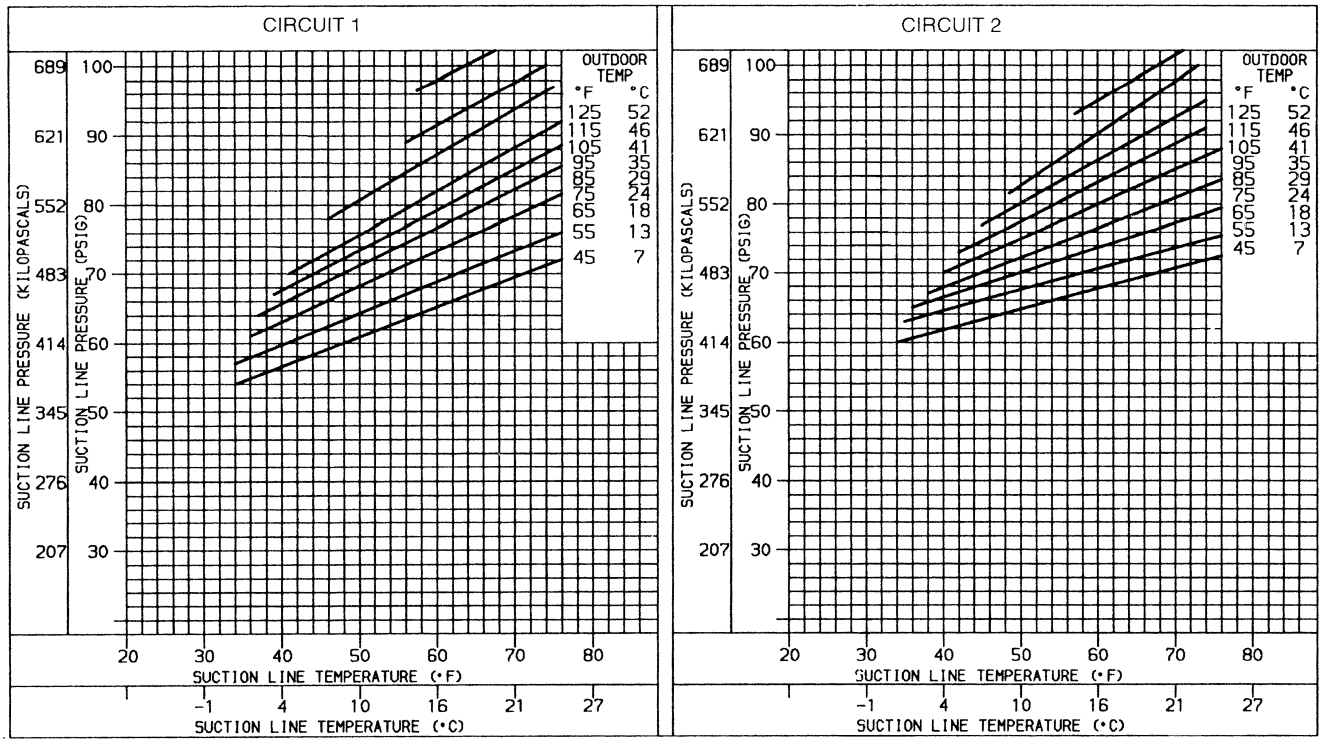


**Fig. 50 — Cooling Charging Charts, 48TF012 Units**

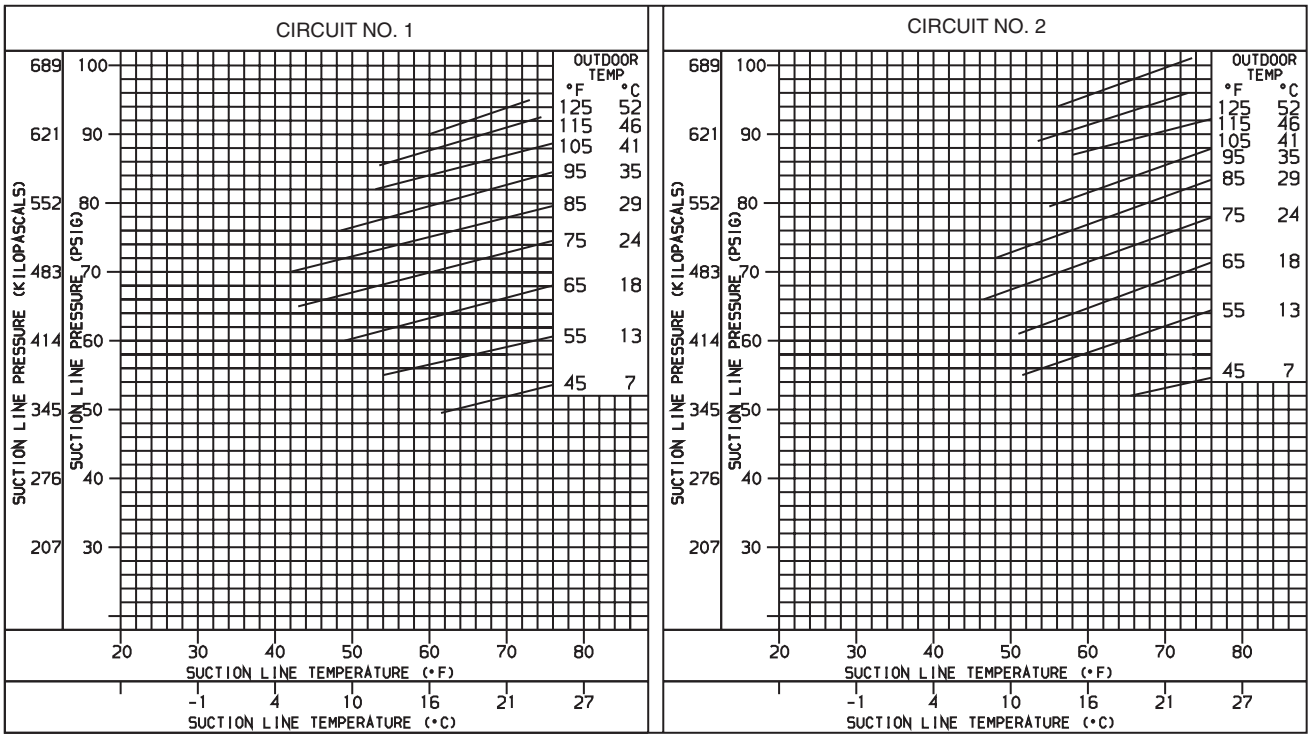


**Fig. 51 — Cooling Charging Chart; 48TF014 Units**

**Flue Gas Passageways —** To inspect the flue collector box and upper areas of the heat exchanger:

1. Remove the combustion blower wheel and motor assembly according to directions in Combustion-Air Blower section below.
2. Remove the flue cover to inspect the heat exchanger.
3. Clean all surfaces as required using a wire brush.

**Combustion-Air Blower —** Clean periodically to assure proper airflow and heating efficiency. Inspect blower wheel every fall and periodically during heating season. For the first heating season, inspect blower wheel bimonthly to determine proper cleaning frequency.

To inspect blower wheel, shine a flashlight into draft hood opening. If cleaning is required, remove motor and wheel as follows:

1. Slide burner access panel out.
2. Remove the 6 screws that attach induced-draft motor housing to vestibule plate (Fig. 52).
3. The blower wheel can be cleaned at this point. If additional cleaning is required, continue with Steps 4 and 5.
4. To remove blower from the motor shaft, remove 2 setscrews.
5. To remove motor, remove the 4 screws that hold blower housing to mounting plate. Remove the motor cooling fan by removing one setscrew. Then remove nuts that hold motor to mounting plate.
6. To reinstall, reverse the procedure outlined above.

**Limit Switch —** Remove blower access panel (Fig. 6). Limit switch is located on the fan deck.

**Burner Ignition —** Unit is equipped with a direct spark ignition 100% lockout system. Integrated Gas Unit Controller (IGC) is located in the control box (Fig. 11). Module contains a self-diagnostic LED (light-emitting diode). A single LED on the IGC provides a visual display of operational or sequential problems when the power supply is interrupted. When a break in power occurs, the module will be reset (resulting in a loss of fault history) and the indoor (evaporator) fan ON/OFF times will be reset. For additional information, refer to the Start-Up, Heating section on page 34. The LED error code can be observed through the viewport. During servicing refer to the label on the control box cover or Table 25 for an explanation of LED error code descriptions.

If lockout occurs, unit may be adjusted by interrupting power supply to unit for at least 5 seconds.

**Table 25 — LED Error Code Description***

| LED INDICATION | ERROR CODE DESCRIPTION |
|---|---|
| **ON** | Normal Operation |
| **OFF** | Hardware Failure |
| **1 Flash†** | Evaporator Fan On/Off Delay Modified |
| **2 Flashes** | Limit Switch Fault |
| **3 Flashes** | Flame Sense Fault |
| **4 Flashes** | 4 Consecutive Limit Switch Faults |
| **5 Flashes** | Ignition Lockout Fault |
| **6 Flashes** | Induced-Draft Motor Fault |
| **7 Flashes** | Rollout Switch Fault |
| **8 Flashes** | Internal Control Fault |
| **9 Flashes**** | Temporary 1 hour automatic reset fault |

LEGEND

**LED** — Light-Emitting Diode

*A 3-second pause exists between LED error code flashes. If more than one error code exists, all applicable codes will be displayed in numerical sequence.

†Indicates a code that is not an error. The unit will continue to operate when this code is displayed.

**Indicates internal processor fault and will reset itself in 1 hour.

IMPORTANT: Refer to Troubleshooting Tables 26-30 for additional information.

**Main Burners —** At the beginning of each heating season, inspect for deterioration, blockage due to corrosion or other causes. Observe the main burner flames and replace burners if necessary.

**⚠ CAUTION**

When working on gas train, do not hit or plug orifice spuds.

REMOVAL AND REPLACEMENT OF GAS TRAIN (Fig. 52 and 53)

1. Shut off manual gas valve.
2. Shut off power to unit and tag disconnect.
3. Slide out burner section side panel (not shown).
4. Disconnect gas piping at unit gas valve.
5. Remove wires connected to gas valve. Mark each wire.
6. Remove wires from ignitor and sensor wires at the Integrated Gas Unit Controller (IGC).
7. Remove the 2 screws that attach the burner rack to the vestibule plate.
8. Slide the burner tray out of the unit (Fig. 53).
9. To reinstall, reverse the procedure outlined above.

CLEANING AND ADJUSTMENT

1. Remove burner rack from unit as described in Removal and Replacement of Gas Train section on this page.
2. Inspect burners; if dirty, remove burners from rack.
3. Using a soft brush, clean burners and cross-over port as required.
4. Adjust spark gap. See Fig. 54.
5. Reinstall burners on rack.
6. Reinstall burner rack as described in Removal and Replacement of Gas Train section.

**Replacement Parts —** A complete list of replacement parts may be obtained from any Carrier distributor upon request.

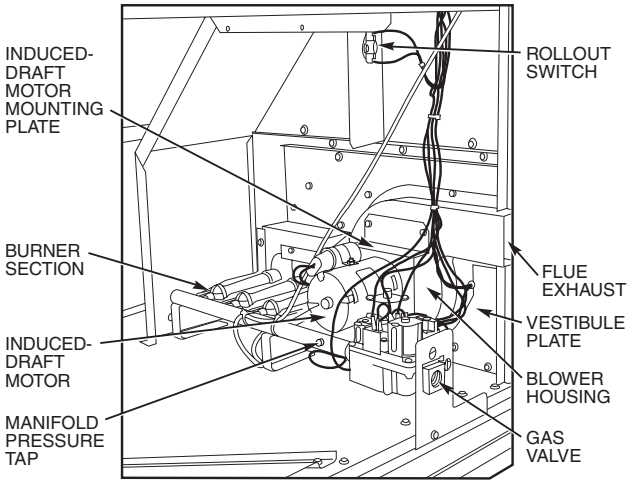


**Fig. 52 — Burner Section Details**

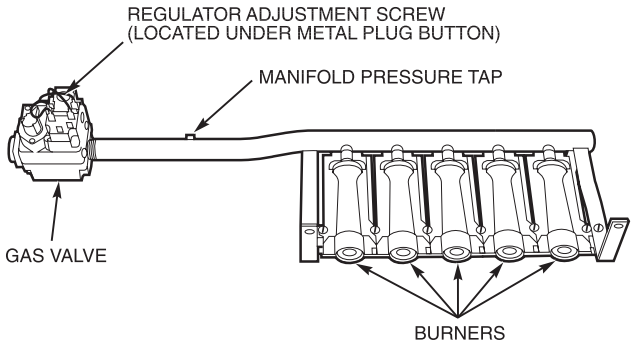


**Fig. 53 — Burner Tray Details**

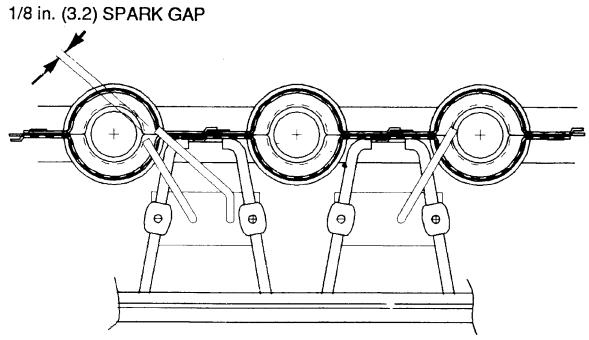


48TFD008
31.4/21.1 kW INPUT (107,000/72,000 BTUH)

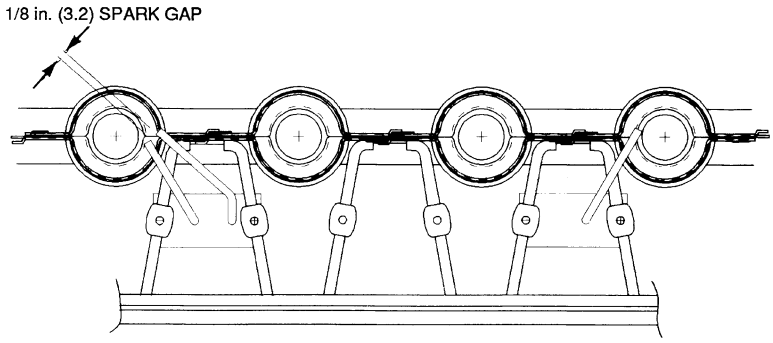


48TFE008, 48TFD012
50.4/31.9 kW INPUT/ (172,000/109,000 BTUH)

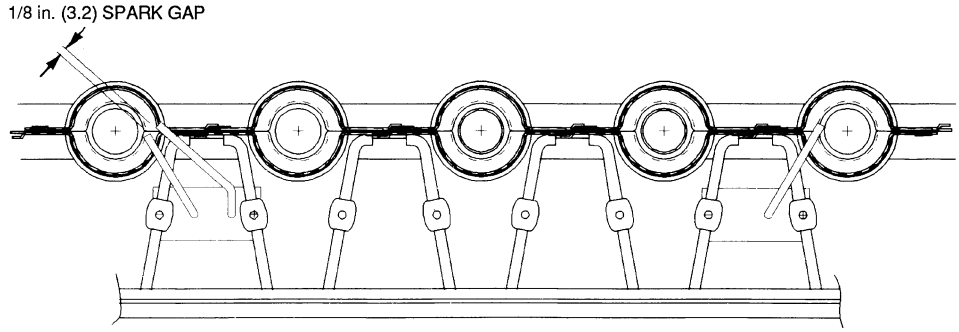


48TFD014, 48TFE012, 48TFF008
59.8/39.8 kW INPUT
(204,000/136,000 BTUH)

48TFE014, 48TFF012
65.6/43.9 kW INPUT
(224,000/150,000 BTUH)

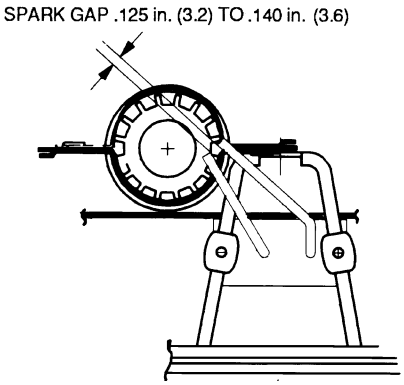


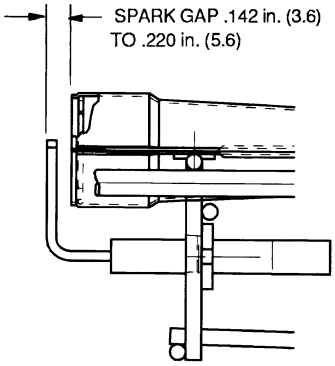


NOTE: Dimensions in ( ) are millimeters.

**Fig. 54 — Spark Gap Adjustment**

## Table 26 — LED Error Code Service Analysis

| PROBLEM | CAUSE | REMEDY |
|---|---|---|
| **Hardware failure. (LED OFF)** | Loss of power to control module (IGC). | Check 5- amp fuse on IGC, power to unit, 24-v circuit breaker, and transformer. Units without a 24-v circuit breaker have an internal overload in the 24-v transformer. If the overload trips, allow 10 minutes for automatic reset. |
| **Limit switch fault. (LED 2 flashes)** | High temperature limit switch is open. | Check the operation of the indoor (evaporator) fan motor. Ensure that the supply-air temperature rise is in accordance with the range on the unit nameplate. |
| **Flame sense fault. (LED 3 flashes)** | The IGC sensed flame that should not be present. | Reset unit. If problem persists, replace control board. |
| **4 consecutive limit switch trips. (LED 4 flashes)** | Inadequate airflow to unit. | Check operation of indoor (evaporator) fan motor and that supply-air temperature rise agrees with range on unit nameplate information. |
| **Ignition lockout. (LED 5 flashes)** | Unit unsuccessfully attempted ignition for 15 minutes. | Check ignitor and flame sensor electrode spacing, gaps, etc. Ensure that flame sense and ignition wires are properly terminated. Verify that unit is obtaining proper amount of gas. |
| **Induced-draft motor fault. (LED 6 flashes)** | IGC does not sense that induced-draft motor is operating. | Check for proper voltage. If motor is operating, check the speed sensor plug/IGC Terminal J2 connection. Proper connection: PIN 1— White, PIN 2 — Red, PIN 3 — Black. |
| **Rollout switch fault. (LED 7 flashes)** | Rollout switch has opened. | Rollout switch will automatically reset, but IGC will continue to lock out unit. Check gas valve operation. Ensure that induced-draft blower wheel is properly secured to motor shaft. Reset unit at unit disconnect. |
| **Internal control fault. (LED 8 flashes)** | Microprocessor has sensed an error in the software or hardware. | If error code is not cleared by resetting unit power, replace the IGC. |
| **Temporary 1 hour automatic reset fault. (LED 9 flashes)** | Stray radio frequency signals in ?? | Processor will be reset after 1 hour. |

LEGEND

**IGC** — Integrated Gas Unit Controller
**LED** — Light-Emitting Diode

IMPORTANT: Refer to Table 28 — Heating Service Troubleshooting for additional troubleshooting information.

**⚠ WARNING**

If the IGC must be replaced, be sure to ground yourself to dissipate any electrical charge that may be present before handling new control board. The IGC is sensitive to static electricity and may be damaged if the necessary precautions are not taken.

## Table 27 — Cooling Service Troubleshooting

| PROBLEM | CAUSE | REMEDY |
|---|---|---|
| **Compressor and condenser fan will not start.** | Power failure. | Call power company. |
| | Fuse blown or circuit breaker tripped. | Replace fuse or reset circuit breaker. |
| | Defective thermostat, contactor, transformer, or control relay. | Replace component. |
| | Insufficient line voltage. | Determine cause and correct. |
| | Incorrect or faulty wiring. | Check wiring diagram and rewire correctly. |
| | Thermostat setting too high. | Lower thermostat setting below room temperature. |
| **Compressor will not start but condenser fan runs.** | Faulty wiring or loose connections in compressor circuit. | Check wiring and repair or replace. |
| | Compressor motor burned out, seized, or internal overload open. | Determine cause. Replace compressor. |
| | Defective run/start capacitor, overload, or start relay. | Determine cause and replace. |
| | One leg of 3-phase power dead. | Replace fuse or reset circuit breaker. Determine cause. |
| **Compressor cycles (other than normally satisfying thermostat).** | Refrigerant overcharge or undercharge. | Recover refrigerant, evacuate system, and recharge to nameplate. |
| | Defective compressor. | Replace and determine cause. |
| | Insufficient line voltage. | Determine cause and correct. |
| | Blocked condenser. | Determine cause and correct. |
| | Defective run/start capacitor, overload, or start relay. | Determine cause and replace. |
| | Defective thermostat. | Replace thermostat. |
| | Faulty condenser-fan motor or capacitor. | Replace. |
| | Restriction in refrigerant system. | Locate restriction and remove. |
| **Compressor operates continuously.** | Dirty air filter. | Replace filter. |
| | Unit undersized for load. | Decrease load or increase unit size. |
| | Thermostat set too low. | Reset thermostat. |
| | Low refrigerant charge. | Locate leak, repair, and recharge. |
| | Leaking valves in compressor. | Replace compressor. |
| | Air in system. | Recover refrigerant, evacuate system, and recharge. |
| | Condenser coil dirty or restricted. | Clean coil or remove restriction. |
| **Excessive head pressure.** | Dirty air filter. | Replace filter. |
| | Dirty condenser coil. | Clean coil. |
| | Refrigerant overcharged. | Remove excess refrigerant. |
| | Air in system. | Recover refrigerant, evacuate system, and recharge. |
| | Condenser air restricted or air short-cycling. | Determine cause and correct. |
| **Head pressure too low.** | Low refrigerant charge. | Check for leaks, repair, and recharge. |
| | Compressor valves leaking. | Replace compressor. |
| | Restriction in liquid tube. | Remove restriction. |
| **Excessive suction pressure.** | High heat load. | Check for source and eliminate. |
| | Compressor valves leaking. | Replace compressor. |
| | Refrigerant overcharged. | Recover excess refrigerant. |
| **Suction pressure too low.** | Dirty air filter. | Replace filter. |
| | Low refrigerant charge. | Check for leaks, repair, and recharge. |
| | Metering device or low side restricted. | Remove source of restriction. |
| | Insufficient evaporator airflow. | Increase air quantity. Check filter and replace if necessary. |
| | Temperature too low in conditioned area. | Reset thermostat. |
| | Field-installed filter drier restricted. | Replace. |
| **Compressor no. 2 will not run.** | Unit in economizer mode. | Proper operation; no remedy necessary. |
| **Compressor makes excessive noise (48TF014 scroll only).** | Compressor rotating in wrong direction. | Reverse the 3-phase power load as described in Start-Up, Compressor Rotation section on page 34. |

## Table 28 — Heating Service Troubleshooting

| PROBLEM | CAUSE | REMEDY |
|---|---|---|
| **Burners will not ignite.** | Misaligned spark electrodes. | Check flame ignition and sensor electrode positioning. Adjust as needed. |
| | No gas at main burners. | Check gas line for air purge as necessary. After purging gas line of air, allow gas to dissipate for at least 5 minutes before attempting to relight unit. |
| | | Check gas valve. |
| | Water in gas line. | Drain water and install drip leg to trap water. |
| | No power to furnace. | Check power supply, fuses, wiring, and circuit breaker. |
| | No 24 v power supply to control circuit. | Check transformer. Transformers with internal overcurrent protection require a cool down period before resetting. |
| | Miswired or loose connections. | Check all wiring and wirenut connections. |
| | Burned-out heat anticipator in thermostat. | Replace thermostat. |
| | Broken thermostat wires. | Run continuity check. Replace wires, if necessary. |
| **Inadequate heating.** | Dirty air filter. | Clean or replace filter as necessary. |
| | Gas input to unit too low. | Check gas pressure at manifold. Clock gas meter for input. If too low, increase manifold pressure, or replace with correct orifices. |
| | Unit undersized for application. | Replace with proper unit or add additional unit. |
| | Restricted airflow. | Clean filter, replace filter, or remove any restrictions. |
| | Blower speed too low. | Use high speed tap, increase fan speed, or install optional blower, as suitable for individual units. |
| | Limit switch cycles main burners. | Check rotation of blower, thermostat heat anticipator settings, and temperature rise of unit. Adjust as needed. |
| | Too much outdoor air. | Adjust minimum position. |
| | | Check economizer operation. |
| **Poor flame characteristics.** | Incomplete combustion (lack of combustion air) results in: | Check all screws around flue outlets and burner compartment. Tighten as necessary. |
| | Aldehyde odors, CO, sooting flame, or floating flame. | Cracked heat exchanger. |
| | | Overfired unit — reduce input, change orifices, or adjust gas line or manifold pressure. |
| | | Check vent for restriction. Clean as necessary. |
| | | Check orifice to burner alignment. |
| **Burners will not turn off.** | Unit is locked into Heating mode for a one minute minimum. | Wait until mandatory one minute time period has elapsed or power to unit. |

## Table 29 — EconoMi$er Troubleshooting

| PROBLEM | POTENTIAL CAUSE | REMEDY |
|---|---|---|
| **Damper Does Not Open** | Indoor (Evaporator) Fan is Off | Check to ensure that 24 vac is present at Terminal C1 (Common Power) on the IFC (Indoor [Evaporator] Fan Contactor) or that 24 vac is present at the IFO (Indoor [Evaporator] Fan On) terminal. Check whether 24 vac is present at PL6-1 (red wire) and/or PL6-3 (black wire). If 24 vac is not present, check wiring (see unit label diagram).<br>Check proper thermostat connection to G on the connection board. |
| | No Power to EconoMi$er Controller | Check to ensure that 24 vac is present across Terminals 24 VAC and 24 V COM on the EconoMi$er control. If 24 vac is not present, check wiring (see unit label diagram). If 24 vac is present, STATUS light should be on constantly. |
| | No Power to G Terminal | If IFM is on, check to ensure 24 vac is present on G Terminal of the EconoMi$er controller. If 24 vac is not present, check wiring (see unit label diagram). |
| | Controller Fault | If STATUS light is flashing one flash, the EconoMi$er controller is experiencing a fault condition. Cycle power to the controller. If condition continues, replace the EconoMi$er controller. |
| | Thermostat Fault | If STATUS light is flashing two flashes, the EconoMi$er controller senses the thermostat is wired incorrectly. Check wiring between the thermostat and the connection board in the electrical panel. The fault condition is caused by Y2 being energized before Y1. |
| | Actuator Fault | Check the wiring between the EconoMi$er controller and the actuator.<br>Hold CONFIG button between 3 and 10 seconds to verify the actuator's operation. (This process takes 3 minutes to complete.) |
| **EconoMi$er Operation Limited to Minimum Position** | Minimum Position Set Incorrectly | Verify that the MIN POS (%) is set greater than zero. Adjust MIN POS (%) to 100% to verify operation, and then set to correct setting. |
| | EconoMi$er Changeover Set Point Set Too High or Too Low | Set at correct value. See Table 4. |
| | Supply Air Temperature Sensor Faulty | If STATUS light is flashing 4 flashes, Supply Air Temperature Sensor is faulty. Check wiring or replace sensor. |
| | Outdoor Air Temperature Sensor Faulty | If STATUS light is flashing 5 flashes, Outdoor Air Temperature Sensor is faulty. Check wiring or replace sensor. |
| **Damper Position Less than Minimum Position Set Point** | Supply Air Low Limit Strategy Controlling | The supply-air temperature is less than 7 C (45 F), causing the minimum position to be decreased. Refer to the Start-Up instructions. Verify correct setting of MIN POS (%). If correct, EconoMi$er is operating correctly. |
| **Damper Does Not Return to Minimum Position** | $CO_2$ Ventilation Strategy Controlling | If a $CO_2$ sensor is being used, and the damper position is greater than minimum position, the ventilation control strategy is controlling. Refer to the Start-Up instructions. EconoMi$er is operating correctly. |
| **Damper Does Not Close on Power Loss** | Damper Travel is Restricted | Check to ensure the damper is not blocked. |

LEGEND

**IFM** — Indoor Fan Motor
**PL** — Plug

## Table 30 — Durablade Economizer Troubleshooting

| PROBLEM | CAUSE | REMEDY |
|---|---|---|
| **Damper does not open.** | Indoor (evaporator) fan is off. | 1. Check to ensure that 24 vac is present at terminal C1 on the IFC or that 24 vac is present at the IFO terminal. Check whether 24 vac is present at PL6-1 (red wire) and/or PL6-3 (black wire). If 24 vac is not present, check wiring (see unit label diagram).<br>2. Check proper thermostat connection to G on the connection board. |
| | No power to economizer motor. | 1. Check that SW3 is properly making contact with the damper blade. Check that SW1 is in the NC (normally closed) position.<br>2. Check diode D1. If diode is not functioning properly, replace D1.<br>3. Confirm that the economizer control board is grounded properly at PL6-4 (brown wire) and at brown terminal of the economizer control board (brown wire). The economizer motor must also be grounded properly at the negative motor terminal (brown wire).<br>4. Verify SW1 and SW3 are working and wired properly (see unit label diagram).<br>5. Check for 24 vac input at both PL6-1 (red wire) and PL6-3 (black wire). If 24 vac not present, check unit wiring (see unit label diagram). If 24 vac is found in both places, check for 24 vac at the yellow terminal of the economizer control board (yellow wire). If 24 vac power is not present, replace the economizer control board. |
| | Economizer motor failure. | If the indoor (evaporator) fan and economizer motor are energized, verify that there is a minimum of 18 vdc at the positive motor terminal. If the motor is not operating, replace the motor. |
| **Economizer operation limited to minimum position.** | OAT or EC set too high. | 1. Set at correct temperature (1.7 C [3 F] below indoor space temperature).<br>2. Check OAT or EC by setting above outdoor temperature or humidity level. If the OAT or EC switches do not close, replace OAT or EC. |
| | Verify economizer control board is correctly wired and works properly. | 1. Perform the following tests when OAT or EC is closed, Y1 is called for and damper is at minimum position. Confirm 24 vac on gray terminal of the economizer control board (gray wire). If 24 vac is not present, check wiring (see unit label diagram).<br>2. Verify that SW1 and SW3 are wired correctly and working properly (see unit label diagram).<br>3. Check to ensure that 24 vac exists at PL6-2 (blue wire). If 24 vac is not present, check wiring (see unit wiring label diagram).<br>4. Check 24 vac output at PL6-10 (white wire). If 24 vac is not present, replace economizer control board. |
| | Check SAT. | 1. After verifying that the OAT and EC settings and the economizer control board wiring are correct, check to ensure that the 24 vac terminal of the SAT has 24 vac (white wire). If OAT, EC, and control board are functioning and wired properly and no 24 vac exists, check wiring (see unit label diagram).<br>2. If supply-air temperature is greater than 14 C (57 F), 24 vac should be found at terminal T2 on the SAT (pink wire). If 24 vac is not present, replace SAT. |
| **Damper does not close.** | Incorrect wiring of economizer. | 1. Verify that SW2 and SW4 are wired and working properly (see unit label diagram).<br>2. Check diode D2. If diode is not functioning properly, replace D2. |
| | Verify economizer control board is functioning properly. | 1. After verifying that the wiring is correct, modulate the damper to the minimum position. Remove the call for G (evaporator fan).<br>2. If the damper does not move, check for 24 vac at PL6-1 (red wire). If 24 vac is not present, check wiring (see unit label diagram).<br>3. If damper still does not move, check for 24 vac at blue terminal of economizer control board (blue wire). If 24 vac is not present, replace the economizer circuit board. |
| | Check SAT. | 1. After verifying that the wiring is correct and the economizer control board is functioning properly, place the OAT or EC switch in the closed position. Place a call for Y1 and open the damper to the fully open position. Confirm that the 24 vac terminal of the SAT has 24 vac (white wire). If 24 vac is not present, check wiring (see unit label diagram).<br>2. If supply-air temperature is less than 11 C (52 F), 24 vac should be found at terminal T1 on the SAT (violet wire). If 24 vac not found, replace SAT. |
| | Economizer motor failure. | If economizer control board and SAT are functioning properly, verify that there is a minimum of 18 vdc at the positive motor terminal. If a minimum if 18 vdc is present and the motor is still not operating, replace the motor. |
| **Economizer damper does not close on power loss.** | Verify that close-on-power-loss and economizer control board are functioning properly. | 1. Check voltage potential across batteries. If lower than 14 vdc, replace close-on-power-loss power supply (9-v alkaline batteries). It is recommended that you check this emergency power supply on a regular basis or whenever the filters are changed.<br>2. If the close-on-power-loss and economizer control board are functioning properly, check for 14 vdc or higher at the blue terminal of the economizer control board (blue wire) when power is disconnected from unit. If 14 vdc is not present, replace the control board. |

LEGEND

**C1** — Common Power
**EC** — Enthalpy Control
**IFC** — Indoor (Evaporator) Fan Contactor
**IFO** — Indoor (Evaporator) Fan On
**OAT** — Outdoor-Air Thermostat
**PL** — Plug
**SAT** — Supply-Air Thermostat
**SW** — Economizer Position Switch

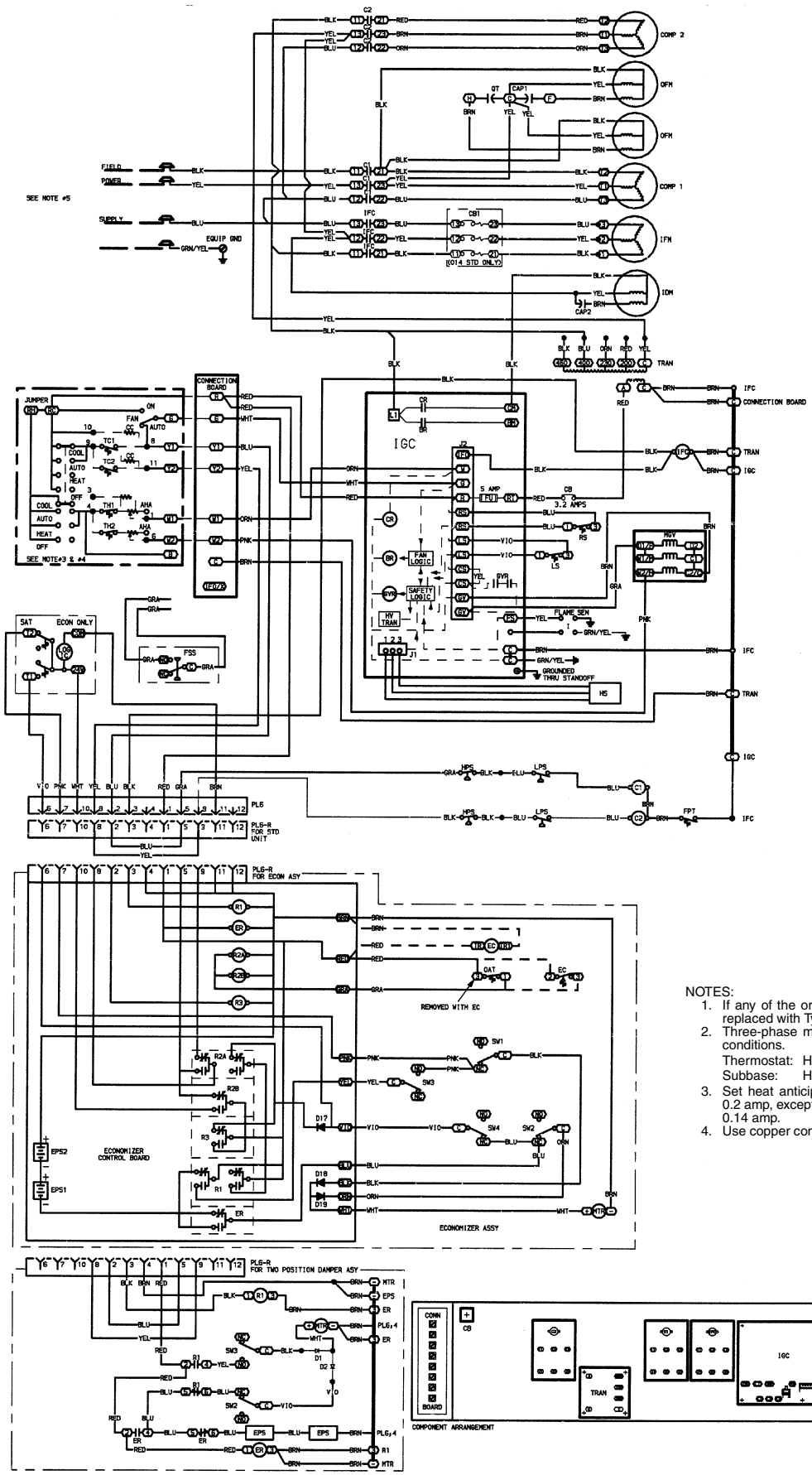


LEGEND

| | | |
|---|---|---|
| **AHA** | — | Adjustable Heat Anticipator |
| **BR** | — | Blower Relay |
| **C** | — | Contactor, Compressor |
| **CAP** | — | Capacitor |
| **CB** | — | Circuit Breaker |
| **CC** | — | Cooling Compensator |
| **COMP** | — | Compressor Motor |
| **CR** | — | Combustion Relay |
| **D** | — | Diode |
| **EC** | — | Enthalpy Control |
| **ECON** | — | Economizer |
| **EPS** | — | Emergency Power Supply (9-Volt Battery) |
| **EQUIP** | — | Equipment |
| **ER** | — | Economizer Relay |
| **FPT** | — | Freeze-Up Protection Thermostat |
| **FSS** | — | Filter Status Sensor |
| **GND** | — | Ground |
| **GVR** | — | Gas Valve Relay |
| **HPS** | — | High-Pressure Switch |
| **HS** | — | Hall-Effect Sensor |
| **I** | — | Ignitor |
| **IDM** | — | Induced-Draft Motor |
| **IFC** | — | Indoor-Fan Contactor |
| **IFM** | — | Indoor Fan Motor |
| **IGC** | — | Integrated Gas Unit Controller |
| **LPS** | — | Low-Pressure Switch |
| **LS** | — | Limit Switch |
| **MGV** | — | Main Gas Valve |
| **MTR** | — | Motor |
| **OAT** | — | Outdoor-Air Thermostat |
| **OFM** | — | Outdoor-Fan Motor |
| **P** | — | Plug |
| **PL** | — | Plug Assembly |
| **QT** | — | Quadruple Terminal |
| **R** | — | Relay |
| **RS** | — | Rollout Switch |
| **SAT** | — | Supply-Air Thermostat |
| **SEN** | — | Sensor |
| **SW1** | — | Switch Fully Open |
| **SW2** | — | Switch Fully Closed |
| **SW3** | — | Switch Min. Vent Position |
| **SW4** | — | Switch Max. Vent Position |
| **TC** | — | Thermostat-Cooling |
| **TH** | — | Thermostat-Heating |
| **TRAN** | — | Transformer |

Field Splice

Marked Wire

Terminal (Marked)

Terminal (Unmarked)

Terminal Block

Splice

Splice (Marked)

Factory Wiring

Field Control Wiring

Field Power Wiring

Accessory or Optional Wiring

To indicate common potential only. Not to represent wiring.

NOTES:

1. If any of the original wire furnished must be replaced, it must be replaced with Type 90 C wire or its equivalent.
2. Three-phase motors are protected under primary single phasing conditions.
   Thermostat: HH07AT170, 172, 174 and P272-2783
   Subbase: HH93AZ176, 178 and P272-1882, 1883
3. Set heat anticipator for first stage at 0.14 amp, second stage at 0.2 amp, except for 008 low heat, set both first and second stage at 0.14 amp.
4. Use copper conductors only.

**Fig. 55 — Typical Unit Wiring Schematic**

Copyright 2001 Carrier Corporation

# START-UP CHECKLIST
## (Remove and Store in Job File)

## I. PRELIMINARY INFORMATION

MODEL NO.:_____ SERIAL NO.: _____

DATE:_____ TECHNICIAN: _____

JOB LOCATION: _____

## II. PRE-START-UP (insert checkmark in box as each item is completed)

- ☐ VERIFY THAT ALL PACKING MATERIALS HAVE BEEN REMOVED FROM UNIT
- ☐ REMOVE ALL SHIPPING HOLDDOWN BOLTS AND BRACKETS PER INSTALLATION INSTRUCTIONS
- ☐ VERIFY THAT CONDENSATE CONNECTION IS INSTALLED PER INSTALLATION INSTRUCTIONS
- ☐ CHECK ALL ELECTRICAL CONNECTIONS AND TERMINALS FOR TIGHTNESS
- ☐ CHECK GAS PIPING FOR LEAKS
- ☐ CHECK THAT INDOOR-AIR FILTERS ARE CLEAN AND IN PLACE
- ☐ VERIFY THAT UNIT INSTALLATION IS LEVEL
- ☐ CHECK FAN WHEELS AND PROPELLERS FOR LOCATION IN HOUSING/ORIFICE AND SETSCREW TIGHTNESS AND DRIVE BELTS TENSION.

## III. START-UP

### ELECTRICAL

| | | | | | | |
|---|---|---|---|---|---|---|
| SUPPLY VOLTAGE | L1-L2 | _____ | L2-L3 | _____ | L3-L1 | _____ |
| COMPRESSOR AMPS | L1 | _____ | L2 | _____ | L3 | _____ |
| COMPRESSOR AMPS | L1 | _____ | L2 | _____ | L3 | _____ |
| INDOOR-FAN AMPS | L1 | _____ | L2 | _____ | L3 | _____ |

### TEMPERATURES

| | | | | |
|---|---|---|---|---|
| OUTDOOR-AIR TEMPERATURE | _____ | DB | | |
| RETURN-AIR TEMPERATURE | _____ | DB | _____ | WB |
| COOLING SUPPLY AIR | _____ | DB | | |
| GAS HEAT SUPPLY AIR | _____ | DB | | |

### PRESSURES

| | | |
|---|---|---|
| GAS INLET PRESSURE | _____ | kPa (IN. WG) |
| GAS MANIFOLD PRESSURE | _____ | kPa (IN. WG) (HI FIRE) |
| REFRIGERANT SUCTION | _____ | Pa (PSIG) — CIRCUIT NO. 1 |
| | _____ | Pa (PSIG) — CIRCUIT NO. 2 |
| REFRIGERANT DISCHARGE | _____ | Pa (PSIG) — CIRCUIT NO. 1 |
| | _____ | Pa (PSIG) — CIRCUIT NO. 2 |

- ☐ VERIFY REFRIGERANT CHARGE USING CHARGING TABLES
- ☐ VERIFY THAT 3-PHASE SCROLL COMPRESSOR ROTATING IN CORRECT DIRECTION (014 ONLY)

CUT ALONG DOTTED LINE

CUT ALONG DOTTED LINE

Copyright 2001 Carrier Corporation