Product Data

WeatherMaker®
Single Package Rooftop Heat Pump Units

15 and 20 Nominal Tons

Unit shown with economizer and power exhaust.

50TCQ 17 and 24
with Puron® (R-410A) Refrigerant

© Carrier Corporation 2017

Carrier's WeatherMaker® 15 to 20 Ton rooftop unit (RTU) was designed by customers for customers. With a newly designed cabinet that integrates "no-strip" screw collars, handled access panels, and more, we've made your unit easy to install, easy to maintain, easy to use and reliable.

Features/Benefits

Easy to install:

These WeatherMaker® units are designed for dedicated factory-supplied vertical or horizontal air flow duct configurations. Designed to fit on pre-installed curbs by another manufacturer, these units also fit on past designed Carrier installed curbs with a new certified and authorized adapter curb. No special field kits are required. This cabinet design also integrates a large control box that gives you room to work and room to mount Carrier accessory controls.

Easy to maintain:

Easy access handles by Carrier provide quick and easy access to all major normally serviced components. Our "no-strip" screw system has superior holding power and guides screws into position while preventing the screw from stripping the unit's metal. Take accurate pressure readings by reading condenser pressure with panels in place as compressors are strategically located to eliminate any air bypass.

Easy to use:

The central terminal board puts all your connections and troubleshooting points in one convenient place, standard. Most low voltage connections are made to the same board and make it easy to find what you're looking for and easy to access it.

Reliable:

Each unit comes with precision sized and tested scroll compressor that is internally protected from over temperature and pressures. Each refrigerant circuit is further protected with a high pressure, loss of charge, and freeze protection switch. In addition, a liquid line filter drier and suction line accumulator protects each circuit. Each unit is factory tested prior to shipment to help ensure unit operation once properly installed.

Key features:

- Two-stage cooling capability with independent circuits and control.
- EERs up to 10.8
- IEERs up to 11.5 with single speed indoor fan motor and up to 12.0 with 2-speed/VFD indoor fan motor
- COPs up to 3.3.
- Dedicated vertical and horizontal air flow duct configuration models. No field kits required.
- Utility connections through the side or bottom. Bottom connections are also in an enclosed environment to help prevent water entry. Field supplied couplings are required.
- Standardized components and control box layout. Standardized components and controls make service and stocking parts easier.
- Scroll compressors on all units with crankcase heaters. This makes service, stocking parts, replacement, and troubleshooting easier.
- Precision sized thermostatic expansion valve (TXV) metering device on each refrigerant circuit.
- Four-way reversing valve rapidly changes the flow of refrigerant to quickly changeover from cooling to heating, heating to cooling, and defrost.
- Easy-adjust, belt-drive motor available. Carrier provides a factory solution for most points in the fan performance table. Motor assembly also contains a fan belt break protection system on all models and reliable pillow block bearing system that allows lubrication through the front of the unit.
- Capable of thru-the-base or thru-the-curb electrical routing.
- Full range of electric heaters and single-point electric kits—pre-engineered and approved for field installation.
- Single-point electrical connection.
- Sloped, composite drain pan sheds water; and won't rust.
- Standardized controls and control box layout. Standardized components and controls make stocking parts and service easier.
- Dependable time/temperature defrost logic provides a defrost cycle, if needed, every 30, 60, 90, or 120 minutes and is adjustable.
- Clean, large, easy to use control box.
- Color-coded wiring.
- Large, laminated wiring and power wiring drawings which are affixed to unit make troubleshooting easy.
- Single, central terminal board for test and wiring connections.
- Fast-access, handled, panels for easy access on normally accessed service panels.
- "No-strip" screw system guides screws into the panel and captures them tightly without stripping the screw, the panel, or the unit.
- Standard mechanical cooling operation from 115°F (46°C) to 30°F (–1°C) ambient temperatures. Low ambient controls are available for cooling operation below 30°F (–1°C).
- 2-in. (51 mm) disposable filters on all units, with 4-in. (102 mm) filter track field-installed.
- Refrigerant filter-drier and suction line accumulator on each circuit.
- High pressure switch, loss of charge switch and freeze protection adds greater unit reliability.
- Many factory-installed options ranging from air management economizers, 2-position dampers, manual outdoor air dampers, plus convenience outlets, disconnect switch and smoke detectors.
- Standard Parts Warranty: 5-year compressor parts, 5-year electric heater parts, 1-year others.
- Staged air volume (SAV™) system utilizes a Variable Frequency Drive (VFD) to automatically adjust the

Table of contents

	Page
Features/Benefits	2,3
Model Number Nomenclature	3
Capacity Ratings	4-7
Physical Data	8-9
Options and Accessories	10-13
Dimensions	14-22
Application Data	23
Performance Data	24-28
Electrical Data	29-46
Typical Wiring Schematics	47-51
Controls	52-54
Guide Specifications	55-63

indoor fan motor speed between cooling stages. Available on 2-stage cooling models with electro-mechanical controls or RTU Open controller. Note that SAV is required on all units for installation in the United States as per Department of Energy (DOE) efficiency standard of 2018.

Model number nomenclature

50TCQ UNITS MODEL NUMBER NOMENCLATURE (EXAMPLE)

Position:	1	2	3	4	5	6	7	8	9	10	11	12	13	14	15	16	17	18
Example:	5	0	T	C	Q	D	2	4	A	1	A	6	-	0	A	0	A	0

Unit Heat Type
50 - Electric Heat Packaged Rooftop

Model Series - WeatherMaker®
TC - Standard Efficiency

Heat Options
Q = Heat Pump

Refrig. Systems Options
D = Two stage cooling models

Cooling Tons
17 - 15 ton
24 - 20 ton

Sensor Options
A = None
B = RA Smoke Detector
C = SA Smoke Detector
D = RA + SA Smoke Detector
E = CO_2
F = RA Smoke Detector and CO_2
G = SA Smoke Detector and CO_2
H = RA + SA Smoke Detector and CO_2

Indoor Fan Options
1 = Standard Static Option, Vertical
2 = Medium Static Option, Vertical
3 = High Static Option,Vertical
B = Medium Static, High Efficiency Motor, Vertical
C = High Static, High Efficiency Motor, Vertical

5 = Standard Static Option, Horizontal*
6 = Medium Static Option, Horizontal
7 = High Static Option, Horizontal
F = Medium Static, High Efficiency Motor, Horizontal
G = High Static, High Efficiency Motor, Horizontal

Coil Options (Outdoor - Indoor - Hail Guard)
A = Al/Cu - Al/Cu
B = Precoat Al/Cu - Al/Cu
C = E-coat Al/Cu - Al/Cu
D = E-coat Al/Cu - E-coat Al/Cu
E = Cu/Cu - Al/Cu
F = Cu/Cu - Cu/Cu
M = Al/Cu -Al/Cu — Louvered Hail Guard
N = Precoat Al/Cu - Al/Cu — Louvered Hail Guard
P = E-coat Al/Cu - Al/Cu — Louvered Hail Guard
Q = E-coat Al/Cu - E-coat Al/Cu — Louvered Hail Guard
R = Cu/Cu - Al/Cu — Louvered Hail Guard
S = Cu/Cu - Cu/Cu — Louvered Hail Guard

Voltage
1 = 575/3/60
5 = 208-230/3/60
6 = 460/3/60

Design Revision
- = Factory Assigned

Base Unit Controls
0 = Base Electromechanical Controls
1 = PremierLink™ Controller
2 = RTU Open Multi-Protocol Controller
6 = Electromechanical with 2-Speed Fan and W7220 Economizer Controller

Intake / Exhaust Options
A = None
B = Temperature Economizer w/ Barometric Relief
F = Enthalpy Economizer w/ Barometric Relief
K = 2-Position Damper
U = Temperature Ultra Low Leak Economizer w/ Barometric Relief
V = Temperature Ultra Low Leak Economizer w/ PE (cent) - Vertical Air Only
W = Enthalpy Ultra Low Leak Economizer w/ Barometric Relief
X = Enthalpy Ultra Low Leak Economizer w/ PE (cent) - Vertical Air Only

Service Options
0 = None
1 = Unpowered Convenience Outlet
2 = Powered Convenience Outlet
3 = Hinged Panels
4 = Hinged Panels and Unpowered Convenience Outlet
5 = Hinged Panels and Powered Convenience Outlet

Electrical Options
A = None
C = Non-Fused Disconnect
G = 2-Speed Indoor Fan (VFD) Controller
J = 2-Speed Fan Controller (VFD) and Non-Fused Disconnect

Packing
0 = Standard

* Not available on horizontal 50TCQ 24 units.

Capacity ratings

AHRI COOLING RATINGS — 2-STAGE COOLING

COOLING MODE							
50TCQ	COOLING STAGES	NOM. CAPACITY (TONS)	NET COOLING CAPACITY (Btuh)	TOTAL POWER (kW)	EER	IEER WITH SINGLE SPEED INDOOR MOTOR	IEER WITH 2-SPEED INDOOR MOTOR
D17	2	15	172,000	15.9	10.8	11.5	12.0
D24*	2	20	232,000	21.9	10.6	11.1	12.0

HEATING MODE				
	HEATING, LOW (Btuh)		HEATING, HIGH (Btuh)	
50TCQ	CAPACITY (Btuh)	COP	CAPACITY (Btuh)	COP
D17	103,000	2.4	166,000	3.3
D24*	136,000	2.3	220,000	3.3

LEGEND

AHRI — Air-Conditioning, Heating and Refrigeration Institute
ASHRAE — American Society of Heating, Refrigerating and Air-Conditioning Engineers
COP — Coefficient of Performance
EER — Energy Efficiency Ratio
IECC — International Energy Conservation Code
IEER — Integrated Energy Efficiency

* AHRI rated cfm is 6500 for vertical units and 6000 for horizontal units.

NOTES:
1. Rated and certified under AHRI Standard 340/360, as appropriate.
2. Ratings are based on:
   Cooling Standard: 80°F (27°C) db, 67°F (19°C) wb indoor air temp and 95°F db outdoor air temp.
   IEER Standard: A measure that expresses cooling part load EER efficiency for commercial unitary air conditioning and heat pump equipment on the basis of weighted operation at various load capacities.
3. All 50TCQ units meet the DOE-2018 (Department of Energy), ASHRAE 90.1-2016 and IECC*-2015 minimum efficiency requirements when equipped with the SAV™ (staged air volume) option.

SOUND PERFORMANCE

50TCQ MODEL SIZE	COOLING STAGES	OUTDOOR SOUND (dB)									
		A-Wgt	AHRI 370 Rating	63	125	250	500	1000	2000	4000	8000
17	2	84.1	84	92.2	83.9	80.4	81.8	78.7	76.5	72.2	65.4
24	2	86.5	87	95.6	87.5	84.2	84.2	81.7	77.9	73.2	66.3

LEGEND

dB — Decibel

NOTES:
1. Outdoor sound data is measured in accordance with AHRI standard 370.
2. Measurements are expressed in terms of sound power. Do not compare these values to sound pressure values because sound pressure depends on specific environmental factors which normally do not match individual applications. Sound power values are independent of the environment and therefore more accurate.
3. A-weighted sound ratings filter out very high and very low frequencies, to better approximate the response of the “average" human ear. A-weighted measurements for Carrier units are taken in accordance with AHRI standard 370.

* IECC is a registered trademark of International Code Council, Inc.

COOLING CAPACITIES 2-STAGE COOLING, 15 TONS

50TCQD17				AMBIENT TEMPERATURE (°F)											
				85			95			105			115		
				EAT (db)			EAT (db)			EAT (db)			EAT (db)		
				75	80	85	75	80	85	75	80	85	75	80	85
4500 CFM	EAT (wb)	58	TC	152.7	153.6	161.2	145.9	147.8	155.6	138.8	141.9	149.5	131.2	135.6	143.0
			SHC	135.5	153.6	161.2	132.0	147.8	155.6	128.4	141.9	149.5	124.4	135.6	143.0
		62	TC	164.1	163.9	164.2	156.9	156.7	157.1	149.2	149.0	150.0	141.0	140.8	143.1
			SHC	118.5	139.2	158.6	115.2	135.9	155.1	111.7	132.3	150.0	108.1	128.4	143.1
		67	TC	179.4	179.2	179.0	171.6	171.4	171.1	163.2	162.9	162.7	154.2	154.0	153.6
			SHC	96.7	117.5	138.3	93.5	114.3	135.0	90.0	110.8	131.6	86.5	107.2	127.9
		72	TC	195.8	195.6	195.3	187.2	187.0	186.7	178.0	177.8	177.5	168.2	167.9	167.6
			SHC	74.1	95.4	116.2	71.1	92.1	113.0	67.9	88.8	109.6	64.5	85.2	106.0
		76	TC	—	209.5	209.2	—	200.2	199.9	—	190.2	190.0	—	179.6	179.3
			SHC	—	77.4	98.2	—	74.2	95.0	—	70.9	91.7	—	67.4	88.2
5250 CFM	EAT (wb)	58	TC	157.5	161.1	169.6	150.4	155.2	163.5	143.0	148.9	156.9	135.1	142.0	149.8
			SHC	146.1	161.1	169.6	142.4	155.2	163.5	138.2	148.9	156.9	133.5	142.0	149.8
		62	TC	169.1	168.8	170.2	161.5	161.2	163.7	153.3	153.2	157.1	144.6	144.6	149.9
			SHC	127.1	150.6	170.2	123.7	147.0	163.7	120.1	143.1	157.1	116.4	138.7	149.9
		67	TC	184.7	184.4	184.1	176.3	176.1	175.7	167.5	167.2	166.8	158.0	157.7	157.3
			SHC	102.2	126.0	149.7	98.9	122.6	146.3	95.4	119.1	142.7	91.7	115.4	138.8
		72	TC	201.2	201.0	200.7	192.1	191.9	191.5	182.4	182.2	181.8	172.1	171.8	171.3
			SHC	77.0	100.7	124.5	73.7	97.4	121.2	70.3	94.0	117.8	66.7	90.4	114.1
		76	TC	—	215.0	214.7	—	205.1	204.8	—	194.7	194.3	—	183.5	183.1
			SHC	—	80.3	104.1	—	77.0	100.8	—	73.7	97.4	—	70.1	93.9
6000 CFM	EAT (wb)	58	TC	161.4	167.8	176.7	154.1	161.5	170.2	146.9	154.7	163.1	139.3	147.4	155.5
			SHC	155.5	167.8	176.7	151.8	161.5	170.2	145.6	154.7	163.1	139.3	147.4	155.5
		62	TC	172.9	172.7	176.9	164.9	164.9	170.3	156.4	156.7	163.3	147.4	148.2	155.6
			SHC	135.1	160.8	176.9	131.7	156.8	170.3	128.0	152.3	163.3	124.2	146.4	155.6
		67	TC	188.7	188.3	187.9	180.0	179.6	179.2	170.7	170.4	170.0	160.9	160.5	160.2
			SHC	107.3	133.9	160.4	103.9	130.5	156.8	100.4	126.9	152.9	96.9	123.2	148.7
		72	TC	205.4	205.1	204.7	195.9	195.6	195.1	185.8	185.5	185.0	175.1	174.7	174.2
			SHC	79.1	105.7	132.4	75.8	102.4	129.0	72.3	98.9	125.5	68.7	95.2	121.8
		76	TC	—	219.2	218.9	—	209.0	208.5	—	198.0	197.6	—	186.5	186.0
			SHC	—	82.9	109.6	—	79.7	106.3	—	76.2	102.8	—	72.7	99.2
6750 CFM	EAT (wb)	58	TC	165.1	173.4	182.8	158.0	166.8	175.9	150.9	159.6	168.4	143.5	151.9	160.3
			SHC	163.2	173.4	182.8	158.0	166.8	175.9	150.9	159.6	168.4	143.5	151.9	160.3
		62	TC	176.0	176.2	182.9	167.7	168.2	176.0	158.9	160.0	168.5	149.6	152.0	160.4
			SHC	142.8	169.9	182.9	139.3	165.7	176.0	135.6	160.0	168.5	131.6	152.0	160.4
		67	TC	191.9	191.5	191.1	182.9	182.5	182.1	173.3	172.9	172.7	163.2	162.7	162.8
			SHC	112.2	141.5	170.3	108.7	138.1	166.5	105.1	134.4	162.2	101.3	130.6	157.1
		72	TC	208.8	208.4	207.9	198.9	198.5	198.0	188.5	188.1	187.5	177.4	177.0	176.4
			SHC	81.1	110.5	139.9	77.8	107.1	136.5	74.3	103.6	132.9	70.6	99.9	129.2
		76	TC	—	222.6	222.2	—	212.0	211.5	—	200.7	200.2	—	188.8	188.3
			SHC	—	85.4	114.8	—	82.1	111.5	—	78.7	108.0	—	75.1	104.4
7500 CFM	EAT (wb)	58	TC	168.7	178.2	187.9	161.9	171.2	180.7	154.7	163.7	172.8	147.0	155.6	164.4
			SHC	168.7	178.2	187.9	161.9	171.2	180.7	154.7	163.7	172.8	147.0	155.6	164.4
		62	TC	178.5	179.4	188.1	170.0	171.6	180.8	160.9	163.8	172.9	151.4	155.8	164.5
			SHC	150.2	177.3	188.1	146.6	171.6	180.8	142.6	163.8	172.9	138.3	155.8	164.5
		67	TC	194.5	194.1	193.8	185.3	184.8	184.6	175.5	174.9	175.1	165.0	164.5	165.4
			SHC	116.8	148.8	179.5	113.3	145.3	175.2	109.7	141.7	170.2	105.8	137.8	163.5
		72	TC	211.5	211.1	210.6	201.4	201.0	200.3	190.7	190.2	189.6	179.4	178.8	178.2
			SHC	83.1	115.1	147.2	79.7	111.6	143.7	76.1	108.1	140.1	72.4	104.3	136.3
		76	TC	—	225.4	224.9	—	214.5	213.9	—	202.9	202.3	—	190.8	190.1
			SHC	—	87.8	119.9	—	84.5	116.5	—	81.0	113.0	—	77.4	109.3

LEGEND

— — Do not operate
Cfm — Cubic feet per minute (supply air)
EAT (db) — Entering Air Temperature (dry bulb)
EAT (wb) — Entering Air Temperature (wet bulb)
SHC — Sensible Heat Capacity (1000 Btuh) Gross
TC — Total Capacity (1000 Btuh) Gross

Capacity ratings (cont)

COOLING CAPACITIES, 2-STAGE COOLING, 20 TONS

50TCQD24				AMBIENT TEMPERATURE (°F)											
				85			95			105			115		
				EAT (db)			EAT (db)			EAT (db)			EAT (db)		
				75	80	85	75	80	85	75	80	85	75	80	85
6000 CFM	EAT (wb)	58	TC	211.1	214.4	225.9	201.2	206.2	217.5	190.5	197.3	208.3	179.4	187.7	198.3
			SHC	191.5	214.4	225.9	186.3	206.2	217.5	180.6	197.3	208.3	173.1	187.7	198.3
		62	TC	227.4	227.1	228.8	216.8	216.4	219.2	205.2	204.9	208.6	192.8	192.6	198.5
			SHC	168.0	197.4	222.1	163.1	192.4	215.5	157.8	186.9	208.6	152.3	180.9	198.5
		67	TC	249.2	248.8	248.4	237.7	237.2	236.8	225.1	224.6	224.1	211.5	211.0	210.5
			SHC	137.5	167.2	196.8	132.7	162.4	191.9	127.5	157.2	186.7	122.0	151.7	181.0
		72	TC	272.6	272.1	271.6	259.9	259.5	258.9	246.2	245.7	245.1	231.3	230.8	230.2
			SHC	106.0	136.2	165.9	101.4	131.4	161.1	96.4	126.3	156.0	91.2	120.9	150.6
		76	TC	—	291.8	291.3	—	278.2	277.6	—	263.3	262.7	—	247.4	246.7
			SHC	—	110.8	140.7	—	106.1	136.0	—	101.1	130.9	—	95.8	125.6
7000 CFM	EAT (wb)	58	TC	218.0	225.8	238.1	207.9	217.0	229.0	197.5	207.4	219.0	186.3	169.9	208.1
			SHC	206.7	225.8	238.1	199.7	217.0	229.0	192.4	207.4	219.0	184.6	169.9	208.1
		62	TC	234.3	234.0	238.5	223.0	222.9	229.2	210.8	211.0	219.2	197.6	199.1	208.3
			SHC	180.8	214.0	238.5	175.7	208.4	229.2	170.3	201.5	219.2	164.6	193.2	208.3
		67	TC	265.5	256.0	255.4	244.2	243.7	243.1	230.9	230.4	229.8	216.6	216.0	215.6
			SHC	145.7	179.8	213.7	140.8	174.8	208.6	135.5	169.5	203.0	129.9	163.9	196.9
		72	TC	280.1	279.5	278.9	266.7	266.1	265.4	252.2	251.6	250.9	236.6	236.0	235.2
			SHC	109.9	144.2	178.3	105.1	139.3	173.4	99.9	134.1	168.2	94.4	128.6	162.6
		76	TC	—	299.4	298.7	—	285.0	284.2	—	269.4	268.6	—	252.6	251.7
			SHC	—	115.2	149.4	—	110.4	144.6	—	105.3	139.5	—	99.9	134.0
8000 CFM	EAT (wb)	58	TC	224.7	235.3	248.4	214.6	225.9	238.6	203.6	215.6	227.9	192.8	204.4	216.2
			SHC	218.0	235.3	248.4	211.0	225.9	238.6	203.6	215.6	227.9	192.8	204.4	216.2
		62	TC	239.6	239.8	248.6	227.8	229.0	238.8	215.0	217.3	228.1	201.4	204.7	216.4
			SHC	192.9	228.6	248.6	187.7	220.5	238.8	182.1	212.7	228.1	176.2	204.7	216.4
		67	TC	262.1	261.5	260.9	249.2	248.6	248.1	235.4	234.7	234.5	220.5	219.8	220.1
			SHC	153.4	191.8	229.5	148.4	186.7	224.0	143.0	181.3	217.8	137.3	175.6	209.5
		72	TC	285.9	285.2	284.4	271.9	271.2	270.4	256.9	256.1	255.2	240.7	239.9	239.0
			SHC	113.2	151.7	190.2	108.3	146.8	185.2	103.0	141.5	179.9	97.5	135.9	174.2
		76	TC	—	305.2	304.4	—	290.2	289.3	—	274.0	273.0	—	256.6	255.6
			SHC	—	119.2	157.8	—	114.3	152.9	—	109.1	147.6	—	103.7	142.1
9000 CFM	EAT (wb)	58	TC	230.7	243.3	256.9	220.3	233.4	246.5	209.9	222.5	235.2	198.6	210.7	222.8
			SHC	228.5	243.3	256.9	220.3	233.4	246.5	209.9	222.5	235.2	198.6	210.7	222.8
		62	TC	243.8	245.9	257.1	231.6	234.7	246.7	218.5	222.7	235.4	204.5	210.8	223.0
			SHC	204.4	238.9	257.1	199.0	231.3	246.7	193.2	222.7	235.4	186.8	210.8	223.0
		67	TC	266.5	265.8	265.4	253.2	252.5	252.4	239.0	238.1	239.0	223.6	222.7	224.9
			SHC	160.8	203.3	243.9	155.6	198.2	237.6	150.2	192.6	228.9	144.4	186.7	219.9
		72	TC	290.5	289.7	288.8	276.1	275.3	274.3	260.6	259.7	258.6	243.9	243.0	241.9
			SHC	116.3	159.0	201.6	111.3	154.0	196.5	106.0	148.6	191.2	100.4	142.9	185.4
		76	TC	—	309.8	308.8	—	294.3	293.2	—	277.6	276.5	—	259.8	258.6
			SHC	—	123.0	165.8	—	118.1	160.8	—	112.8	155.5	—	107.3	149.9
10,000 CFM	EAT (wb)	58	TC	236.3	250.2	264.2	226.3	239.7	253.3	215.4	228.3	241.4	203.6	216.0	228.5
			SHC	236.3	250.2	264.2	226.3	239.7	253.3	215.4	228.3	241.4	203.6	216.0	228.5
		62	TC	247.3	251.2	264.4	234.8	239.9	253.5	221.4	228.5	241.6	207.2	216.1	228.7
			SHC	215.3	249.0	264.4	209.6	239.9	253.5	203.4	228.5	241.6	196.2	216.1	228.7
		67	TC	270.1	269.3	269.5	256.5	255.6	256.9	241.8	240.9	243.4	226.1	225.2	229.0
			SHC	167.8	214.4	256.5	162.7	209.1	247.6	157.1	203.4	238.8	151.3	197.1	229.0
		72	TC	294.3	293.4	292.3	279.5	278.5	277.4	263.5	262.5	261.3	246.5	245.4	244.2
			SHC	119.1	165.9	212.7	114.1	160.9	207.5	108.8	155.5	202.0	103.1	149.7	196.1
		76	TC	—	313.5	312.4	—	297.6	296.4	—	280.5	279.2	—	262.3	261.0
			SHC	—	126.6	173.5	—	121.7	168.5	—	116.4	163.1	—	110.8	157.5

LEGEND

— — Do not operate
Cfm — Cubic feet per minute (supply air)
EAT (db) — Entering Air Temperature (dry bulb)
EAT (wb) — Entering Air Temperature (wet bulb)
SHC — Sensible Heat Capacity (1000 Btuh) Gross
TC — Total Capacity (1000 Btuh) Gross

HEATING CAPACITIES, 15 TONS

50TCQD17 RETURN AIR (°F db)	CFM (STANDARD AIR)		TEMPERATURE AIR ENTERING OUTDOOR COIL (°F db AT 70% RH)								
			-5	0	10	17	30	40	47	50	60
55	4500	Capacity	72.8	80.1	95.8	107.6	132.6	155.3	171.2	175.7	195.4
		Int. Cap.	67.1	73.7	87.9	98.1	116.2	155.3	171.2	175.7	194.4
	6000	Capacity	75.8	83.1	99.3	111.6	137.6	160.5	174.1	178.4	197.5
		Int. Cap.	69.9	76.5	91.1	101.7	120.6	160.5	174.1	178.4	197.5
	7500	Capacity	79.4	86.7	103.2	116.0	142.4	164.0	176.9	181.1	199.6
		Int. Cap.	73.2	79.8	94.7	105.8	124.8	164.0	176.9	181.1	199.6
70	4500	Capacity	65.8	73.0	88.9	100.5	124.7	145.1	163.1	168.7	190.3
		Int. Cap.	60.6	67.2	81.6	91.6	109.2	145.1	163.1	168.7	190.3
	6000	Capacity	68.9	76.4	92.6	104.5	129.6	151.5	169.0	174.0	193.0
		Int. Cap.	63.5	70.3	85.0	95.3	113.6	151.5	169.0	174.0	193.0
	7500	Capacity	72.6	80.2	96.6	108.8	134.5	157.3	173.2	177.4	195.7
		Int. Cap.	66.9	73.8	88.7	99.2	117.9	157.3	173.2	177.4	195.7
80	4500	Capacity	60.3	67.5	83.8	95.4	118.8	139.0	156.5	162.2	186.4
		Int. Cap.	55.5	62.1	76.9	87.0	104.1	139.0	156.5	162.2	186.4
	6000	Capacity	63.3	70.8	87.5	99.4	123.8	144.7	163.0	168.5	189.9
		Int. Cap.	58.4	65.2	80.3	90.6	108.5	144.7	163.0	168.5	189.9
	7500	Capacity	67.0	74.7	91.5	103.6	128.8	149.9	168.5	173.6	192.8
		Int. Cap.	61.7	68.7	84.0	94.5	112.8	149.9	168.5	173.6	192.8

LEGEND

Capacity — Instantaneous Capacity (1000 Btuh) includes indoor fan motor heat at AHRI static conditions
Int. Cap. — Integrated Capacity is Instantaneous Capacity minus the effects of front on the outdoor coil and the heat required to defrost
RH — Relative Humidity
db — Dry Bulb

HEATING CAPACITIES, 20 TONS

50TCQD24 RETURN AIR (°F db)	CFM (STANDARD AIR)		TEMPERATURE AIR ENTERING OUTDOOR COIL (°F db AT 70% RH)								
			-5	0	10	17	30	40	47	50	60
55	6000	Capacity	93.4	104.1	125.2	141.7	177.0	206.9	229.0	235.4	261.4
		Int. Cap.	86.1	95.8	114.9	129.2	155.1	206.9	229.0	235.4	261.4
	8000	Capacity	98.8	109.5	131.2	160.8	184.4	214.6	233.4	238.4	264.3
		Int. Cap.	91.0	100.8	120.4	146.6	161.6	214.6	233.4	238.4	264.3
	10000	Capacity	104.8	115.7	137.8	155.0	191.2	221.0	236.8	242.2	267.3
		Int. Cap.	96.6	106.4	126.4	141.4	167.5	221.0	236.8	242.2	267.3
70	6000	Capacity	81.1	92.2	114.9	131.1	165.6	195.1	219.1	226.5	256.2
		Int. Cap.	74.7	84.9	105.5	119.5	145.1	195.1	219.1	226.5	256.2
	8000	Capacity	86.1	97.5	120.3	137.0	173.1	203.3	227.0	233.8	259.2
		Int. Cap.	79.3	89.7	110.4	124.9	151.7	203.3	227.0	233.8	259.2
	10000	Capacity	91.9	103.5	126.4	143.5	179.7	211.8	233.6	239.8	262.9
		Int. Cap.	84.7	95.2	116.0	130.8	157.5	211.8	233.6	239.8	262.9
80	6000	Capacity	72.6	84.0	107.3	124.4	157.7	187.2	210.7	218.5	250.8
		Int. Cap.	66.9	77.3	98.5	113.5	138.2	187.2	210.7	218.5	250.8
	8000	Capacity	77.2	88.9	112.8	129.9	164.8	195.8	219.6	227.2	256.7
		Int. Cap.	71.2	81.8	103.5	118.4	144.4	195.8	219.6	227.2	256.7
	10000	Capacity	82.8	94.7	118.9	136.0	172.0	203.8	227.4	234.5	261.7
		Int. Cap.	76.3	87.1	109.2	124.0	150.7	203.8	227.4	234.5	261.7

LEGEND

Capacity — Instantaneous Capacity (1000 Btuh) includes indoor fan motor heat at AHRI static conditions
Int. Cap. — Integrated Capacity is Instantaneous Capacity minus the effects of front on the outdoor coil and the heat required to defrost
RH — Relative Humidity
db — Dry Bulb

Physical data

PHYSICAL DATA (COOLING), 15 & 20 TONS — ROUND TUBE/PLATE FIN (RTPF) COIL DESIGN

		50TCQD17	50TCQD24
REFRIGERATION SYSTEM			
	# Circuits / # Comp. / Type	2 / 2 / Scroll	2 / 2 Scroll
	R-410A charge A/B (lbs)	16.0 / 16.5	23.4 / 23.4
	Metering device	TXV	TXV
	High-press. Trip / Reset (psig)	630 / 505	630 / 505
	Low-press. Trip / Reset (psig)	24 / 45	24 / 45
EVAP. COIL			
	Material	Cu / Al	Cu / Al
	Tube Diameter	3/8"	3/8"
	Rows / FPI	3 / 15	4 / 15
	Total face area (ft^2)	19.56	22
	Condensate drain conn. size	3/4"	3/4"
EVAP. FAN AND MOTOR — VERTICAL			
STANDARD STATIC	Motor Qty. / Drive Type	1 / Belt	1 / Belt
	Max BHP	2.9	4.9
	RPM range	514-680	690-863
	Motor frame size	56	56
	Fan Qty. / Type	2 / Centrifugal	2 / Centrifugal
	Fan Diameter (in.)	15 X 15	15 X 15
MEDIUM STATIC	Motor Qty. / Drive Type	1 / Belt	n/a
	Max BHP	3.7	n/a
	RPM range	679-863	n/a
	Motor frame size	56	n/a
	Fan Qty / Type	2 / Centrifugal	n/a
	Fan Diameter (in.)	15 X 15	n/a
HIGH STATIC	Motor Qty. / Drive Type	1 / Belt	n/a
	Max BHP	4.9	n/a
	RPM range	826-1029	n/a
	Motor frame size	56	n/a
	Fan Qty. / Type	2 / Centrifugal	n/a
	Fan Diameter (in.)	15 x 15	n/a
MEDIUM STATIC - HIGH EFF.	Motor Qty / Drive Type	n/a	1 / Belt
	Max BHP	n/a	6.5 / 6.9 / 7.0 / 8.3
	RPM range	n/a	835-1021
	Motor frame size	n/a	184T
	Fan Qty. / Type	n/a	2 / Centrifugal
	Fan Diameter (in.)	n/a	15 x 15
HIGH STATIC - HIGH EFF.	Motor Qty. / Drive Type	n/a	1 / Belt
	Max BHP	n/a	10.5 / 11.9 / 11.9 / 11.0
	RPM range	n/a	941-1176
	Motor frame size	n/a	213T
	Fan Qty. / Type	n/a	2 / Centrifugal
	Fan Diameter (in.)	n/a	15 x 15

PHYSICAL DATA (COOLING), 15 & 20 TONS — ROUND TUBE/PLATE FIN (RTPF) COIL DESIGN (cont)

		50TCQD17	50TCQD24
EVAP. FAN AND MOTOR — HORIZONTAL			
STANDARD STATIC	Motor Qty. / Drive Type	1 / Belt	n/a
	Max BHP	3.7	n/a
	RPM range	514-680	n/a
	Motor frame size	56	n/a
	Fan Qty. / Type	2 / Centrifugal	n/a
	Fan Diameter (in.)	18 x 15 / 15 x 11	n/a
MEDIUM STATIC	Motor Qty / Drive Type	1 / Belt	n/a
	Max BHP	3.7	n/a
	RPM range	614-780	n/a
	Motor frame size	56	n/a
	Fan Qty. / Type	2 / Centrifugal	n/a
	Fan Diameter (in.)	18 x 15 / 15 x 11	n/a
HIGH STATIC	Motor Qty. / Drive Type	1 / Belt	n/a
	Max BHP	4.9	n/a
	RPM range	746-912	n/a
	Motor frame size	56	n/a
	Fan Qty. / Type	2 / Centrifugal	n/a
	Fan Diameter (in.)	18 x 15 / 15 x 11	n/a
STANDARD STATIC - HIGH EFF.	Motor Qty. / Drive Type	n/a	1 / Belt
	Max BHP	n/a	6.5 / 6.9 / 7.0 / 8.3
	RPM range	n/a	690-863
	Motor frame size	n/a	184T
	Fan Qty. / Type	n/a	2 / Centrifugal
	Fan Diameter (in.)	n/a	18 x 15 / 15 x 11
MEDIUM STATIC - HIGH EFF.	Motor Qty. / Drive Type	n/a	1 / Belt
	Max BHP	n/a	6.5 / 6.9 / 7.0 / 8.3
	RPM range	n/a	835-1021
	Motor frame size	n/a	184T
	Fan Qty. / Type	n/a	2 / Centrifugal
	Fan Diameter (in.)	n/a	18 x 15 / 15 x 11
HIGH STATIC - HIGH EFF.	Motor Qty. / Drive Type	n/a	1 / Belt
	Max BHP	n/a	10.5 / 11.9 / 11.9 / 11.0
	RPM range	n/a	941-1176
	Motor frame size	n/a	213T
	Fan Qty. / Type	n/a	2 / Centrifugal
	Fan Diameter (in.)	n/a	18 x 15 / 15 x 11
CONDENSER COIL (CIRCUIT A)			
	Coil Type	RTPF	RTPF
	Coil Length (in)	70	82
	Coil Height (in)	44	44
	Rows / FPI	2 Rows / 18 FPI	2 Rows / 18 FPI
	Total face area (ft^2)	21.4	25.1
CONDENSER COIL (CIRCUIT B)			
	Coil Type	RTPF	RTPF
	Coil Length (in)	70	82
	Coil Height (in)	44	44
	Rows / FPI	2 Rows / 18 FPI	2 Rows / 18 FPI
	Total face area (ft^2)	21.4	25.1
CONDENSER FAN / MOTOR			
	Qty. / Motor Drive Type	3 / direct	4 / direct
	Motor HP / RPM	1/4 / 1100	1/4 1100
	Fan Diameter (in.)	22	22
FILTERS			
	RA Filter # / size (in.)	6 / 20 x 25 x 2	6 / 20 x 25 x 2
	OQ Inlet Screen # / size (in.)	4 / 16 x 25 x 1	4 / 16 x 25 x 1

Options and accessories

FACTORY-INSTALLED OPTIONS AND FIELD-INSTALLED ACCESSORIES

CATEGORY	ITEM	FACTORY-INSTALLED OPTION	FIELD-INSTALLED ACCESSORY
CABINET	Dedicated vertical air flow duct configuration	X	
	Dedicated horizontal air flow duct configuration	X	
	Hinged access panels	X	
COIL OPTIONS	Cu/Cu (indoor and outdoor) coils	X	
	E-coated (indoor and outdoor) coils	X	
	Pre-coated (indoor and outdoor) coils	X	
CONDENSER PROTECTION	Condenser coil hail guard (louvered design)	X	X
CONTROLS	Thermostats, temperature sensors, and subbases		X
	PremierLink™ DDC communicating controller [4, 6]	X	X
	RTU Open multi-protocol controller	X	
	Smoke detector (supply and/or return air)	X	
	Time Guard II compressor delay control circuit		X
	Phase Monitor		X
	Condensate overflow switch	X	
ECONOMIZERS AND OUTDOOR AIR DAMPERS	EconoMi$er® IV (for electro-mechanical controlled RTUs)	X	X
	EconoMi$er2 (for DDC controlled RTUs)	X	X
	Motorized 2-position outdoor-air damper [6]	X	X
	Manual outdoor-air damper (25%) [6]	X	X
	Barometric relief [1]	X	X
	Power exhaust	X	X
	Barometric relief hood (Horizontal economizer only)		X
	Ultra-Low Leak EconoMi$er X for electro-mechanical controls, complies with FDD. (Standard and Ultra Low Leak air damper models)	X	X
ECONOMIZER SENSORS AND IAQ DEVICES	Single dry bulb temperature sensors [2]	X	X
	Differential dry bulb temperature sensors [2]		X
	Single enthalpy sensors [2]	X	X
	Differential enthalpy sensors [2]		X
	CO_2 sensor (wall, duct, or unit mounted) [3]	X	X
ELECTRIC HEAT	Electric resistance heaters		X
	Single point kit		X
INDOOR MOTOR & DRIVE	Multiple motor and drive packages	X	
	Staged Air Volume (SAV) system w/VFD controller (2-stage cooling only with electro-mechanical controls and RTU Open controller) [5]	X	
	Display kit for SAV™ system with VFD		X
LOW AMBIENT CONTROL	Motormaster® head pressure controller [3]		X
POWER OPTIONS	Convenience outlet (powered)	X	
	Convenience outlet (un-powered): 15 amp factory-installed, 20 amp field-installed	X	X
	Non-fused disconnect	X	
ROOF CURBS	Roof curb 14-in. (356 mm)		X
	Roof curb 24-in. (610 mm)		X
	Adapter Curb (Adapts to Models - DP/DR/HJ/TM)		X

NOTES
1. Included with economizer.
2. Sensors used to optimize economizer performance.
3. See application data for assistance.
4. PremierLink controller is not available on units with SAV.
5. SAV is required on all units for installation in the United States as per the Department of Energy (DOE) efficiency standard of 2018.
6. Not available with SAV.

Economizer (dry-bulb or enthalpy)

Economizers can reduce operating costs. They bring in fresh, outside air for ventilation; and provide cool outside air to cool your building. This is the preferred method of low ambient cooling. When coupled to CO_2 sensors, economizers can limit the ventilation air to only that amount required.

Economizers are available, installed and tested by the factory, with either enthalpy or dry-bulb temperature inputs. There are also models for electro-mechanical as well as direct digital controllers. Additional sensors are available as accessories to optimize the economizer.

Economizers include gravity controlled barometric relief that helps equalize building pressure and ambient air pressures. This can be a cost effective solution to prevent building pressurization. If further control of exhaust air is required, a dual centrifugal fan power exhaust system is also available.

CO_2 sensor

The CO_2 sensor improves productivity and saves money by working with the economizer to intake only the correct amount of outside air for ventilation. As occupants fill your building, the CO_2 sensor detects their presence through increasing CO_2 levels, and opens the economizer appropriately.

When the occupants leave, the CO_2 levels decrease, and the sensor appropriately closes the economizer. This intelligent control of the ventilation air, called Demand Controlled Ventilation (DCV) reduces the overall load on the rooftop, saving money.

Smoke detectors

Trust the experts. Smoke detectors make your application safer and your job easier. Carrier smoke detectors immediately shut down the rooftop unit when smoke is detected. They are available, installed by the factory, for supply air, return air, or both.

Louvered hail guards

Sleek, louvered panels protect the condenser coil from hail damage, foreign objects, and incidental contact.

Convenience outlet (powered or un-powered)

Reduce service and/or installation costs by including a convenience outlet in your specification. Carrier will install this service feature at our factory. Provides a convenient, 15 amp, 115v GFCI receptacle with “Wet in Use" cover. The “powered" option allows the installer to power the outlet from the line side of the disconnect side as required by code. The “un-powered" option is to be powered from a separate (non-unit) 115/120v power source. The unpowered convenience outlet is available as a 15 amp factory-installed option or a 20 amp field-installed accessory.

The 20 amp unpowered convenience outlet kit provides a flexible installation method which allows code compliance for height requirements of the GFCI outlet from the finished roof surface as well as the capability to relocate the outlet to a more convenient location, if necessary.

Non-fused disconnect

This OSHA-compliant, factory-installed, safety switch allows a service technician to locally secure power to the rooftop. When selecting a factory-installed non-fused disconnect, note they are sized for unit as ordered from the factory. The sizing of these does not accommodate any power exhaust devices, etc.

Power exhaust with barometric relief

Superior internal building pressure control. This field-installed accessory or factory-installed option may eliminate the need for costly, external pressure control fans.

PremierLink™ DDC controller

This CCN controller regulates your rooftop performance to tighter tolerances and expanded limits, as well as facilitates zoning systems and digital accessories. It also unites your Carrier HVAC equipment together on one, coherent CCN network. The PremierLink controller can be factory-installed or field-installed.

RTU Open multi-protocol controller

Connect the rooftop to an existing BAS without needing complicated translators or adapter modules using the RTU Open controller. This new controller speaks the 4 most common building automation system languages (BACnet*, Modbus†, N2, and LonWorks**). Use this controller when you have an existing BAS.

Time guard II control circuit

This accessory protects your compressor by preventing short-cycling in the event of some other failure, prevents the compressor from restarting for 30 seconds after stopping. Not required with PremierLink™ controller, RTU Open controller, or authorized commercial thermostats.

Filter or fan status switches

Use these differential pressure switches to detect a filter clog or indoor fan motor failure. When used in conjunction with a compatible unit controller/thermostat the switches will activate alarm to warn the appropriate personnel.

Motorized 2-position damper

The Carrier 2-position motorized outdoor air damper admits up to 100% outside air. Using reliable, gear-driven technology, the 2-position damper opens to allow ventilation air and closes when the rooftop stops, stopping unwanted infiltration. Not available with Staged Air Volume (SAV) models.

Manual OA damper

Manual outdoor air dampers are an economical way to bring in ventilation air. The dampers are available in 25% versions. Not available with Staged Air Volume (SAV) models.

* BACnet is a registered trademark of ASHRAE (American Society of Heating, Refrigerating and Air-Conditioning Engineers).
† Modbus is a registered trademark of Schneider Electric.
** LonWorks is a registered trademark of Echelon Corporation.

Alternate motors and drives

Some applications need larger horsepower motors, some need more airflow, and some need both. Regardless of the case, your Carrier expert has a factory-installed combination to meet your application. A wide selection of motors and pulleys (drives) are available, factory-installed, to handle nearly any application.

Condenser overflow switch (factory-installed option)

This sensor and related controller monitors the condensate level in the drain pan and shuts down compression operation when overflow conditions occur. It includes:

- Indicator light - solid red (more than 10 seconds on water contact - compressors disabled), blinking red (sensor disconnected)
- 10 second delay to break - eliminates nuisance trips from splashing or waves in pan (sensor needs 10 seconds of constant water contact before tripping)

Disables the compressor(s) operation when condensate plug is detected, but still allows fans to run for Economizer.

Staged air volume (SAV™) indoor fan speed system with a variable frequency drive (VFD)

Carrier's Staged Air Volume (SAV) system saves energy and installation time by utilizing a Variable Frequency Drive (VFD) to automatically adjust the indoor fan motor speed in sequence with the units cooling operation. Per ASHRAE 90.1-2016 and IECC-2015 standards, during the first stage of cooling operation the VFD will adjust the fan motor to provide 66% of the total cfm established for the unit. When a call for the second stage of cooling is required, the VFD will allow the total cfm for the unit established (100%). During the heating mode the VFD will allow total design cfm (100%) operation and during the ventilation mode the VFD will allow operation to 66% of total cfm.

Compared to single speed indoor fan motor systems, Carrier's SAV system can save substantial energy, 25%+ versus single speed indoor fan motor systems.

> IMPORTANT: Data based on .10 ($/kWh) in an office application utilizing Carrier's HAP 4.6 simulation software program.

The VFD used in Carrier's SAV system has soft start capabilities to slowly ramp up the speeds, thus eliminating any high inrush air volume during initial start-up. It also has internal over current protection for the fan motor and a field-installed display kit that allows adjustment and in depth diagnostics of the VFD.

This SAV system is available on models with 2-stage cooling operation with electro-mechanical controls or RTU Open multi-protocol controls. Both space sensor and conventional thermostats controls can be used to provide accurate control in any application.

The SAV system is very flexible for initial fan performance set up and adjustment. The standard factory shipped VFD is pre-programmed to automatically stage the fan speed between the first and second stage of cooling. The unit fan performance static pressure and cfm can be easily adjusted using the traditional means of pulley adjustments. The other means to adjust the unit static and cfm performance is to utilize the field-installed Display Kit and adjust the frequency and voltage in the VFD to required performance requirements. In either case, once set up, the VFD will automatically adjust the speed between the cooling stage operations.

Motormaster® head pressure controller

The Motormaster motor controller is a low ambient, head pressure controller kit that is designed to maintain the unit's condenser head pressure during periods of low ambient cooling operation. This device should be used as an alternative to economizer free cooling when economizer usage is either not appropriate or desired. The Motormaster will either cycle the outdoor-fan motors or operate them at reduced speed to maintain the unit operation, depending on the model.

Thru-the-base connections

Thru-the-base provisions/connection points are available as standard with every unit. When bottom connections are required, field-furnished couplings are required.

Electric heaters/single point kit

Carrier offers a full-line of field-installed accessory heaters and single point kits when required. The heaters are very easy to use, install, and are all pre-engineered and certified.

Barometric hood

For Horizontal Economizer applications where relief damper is installed in duct work. This kit provides the needed protection.

Hinged access panels

Allows access to unit's major components with specifically designed hinged access panels. Panels are filter, control box, fan motor and compressor.

OPTIONS AND ACCESSORIES WEIGHTS

BASE UNIT WITH OPTIONS AND ACCESSORIES (WEIGHT ADDERS)	MAX WEIGHT ADDERS			
	50TCQD17		50TCQD24	
	lb	kg	lb	kg
Power Exhaust	125	57	125	57
EconoMi$er®	170	77	170	77
Copper Tube/Fin Evaporator Coil	110	50	135	61
Roof Curb 14-in. (356 mm)	240	109	255	116
Roof Curb 24-in. (610 mm)	340	154	355	161
Louvered Hail Guard	60	27	120	54
CO_2 Sensor	5	2	5	2
Return Smoke Detector	5	2	5	2
Supply Smoke Detector	5	2	5	2
Fan/Filter Status Switch	2	1	2	1
Non-Fused Disconnect	15	7	15	7
Powered Convenience Outlet	35	16	35	16
Non-Powered Convenience Outlet	5	2	5	2
Enthalpy Sensor	2	1	2	1
Differential Enthalpy Sensor	3	1	3	1
Two-Position Motorized Damper	50	23	50	23
Manual Damper	35	16	35	16
Field Filter Track 4-in. (102 mm)	12	5	12	5
Motormaster® Controller	35	16	35	16
Medium Static Motor/Drive	5	2	6	3
High Static Motor/Drive	11	5	16	7
SAV™ System with VFD	20	9	30	14

NOTE: Where multiple variations are available, the heaviest combination is listed.

UNIT DIMENSIONAL DRAWING - SIZE 17 UNITS

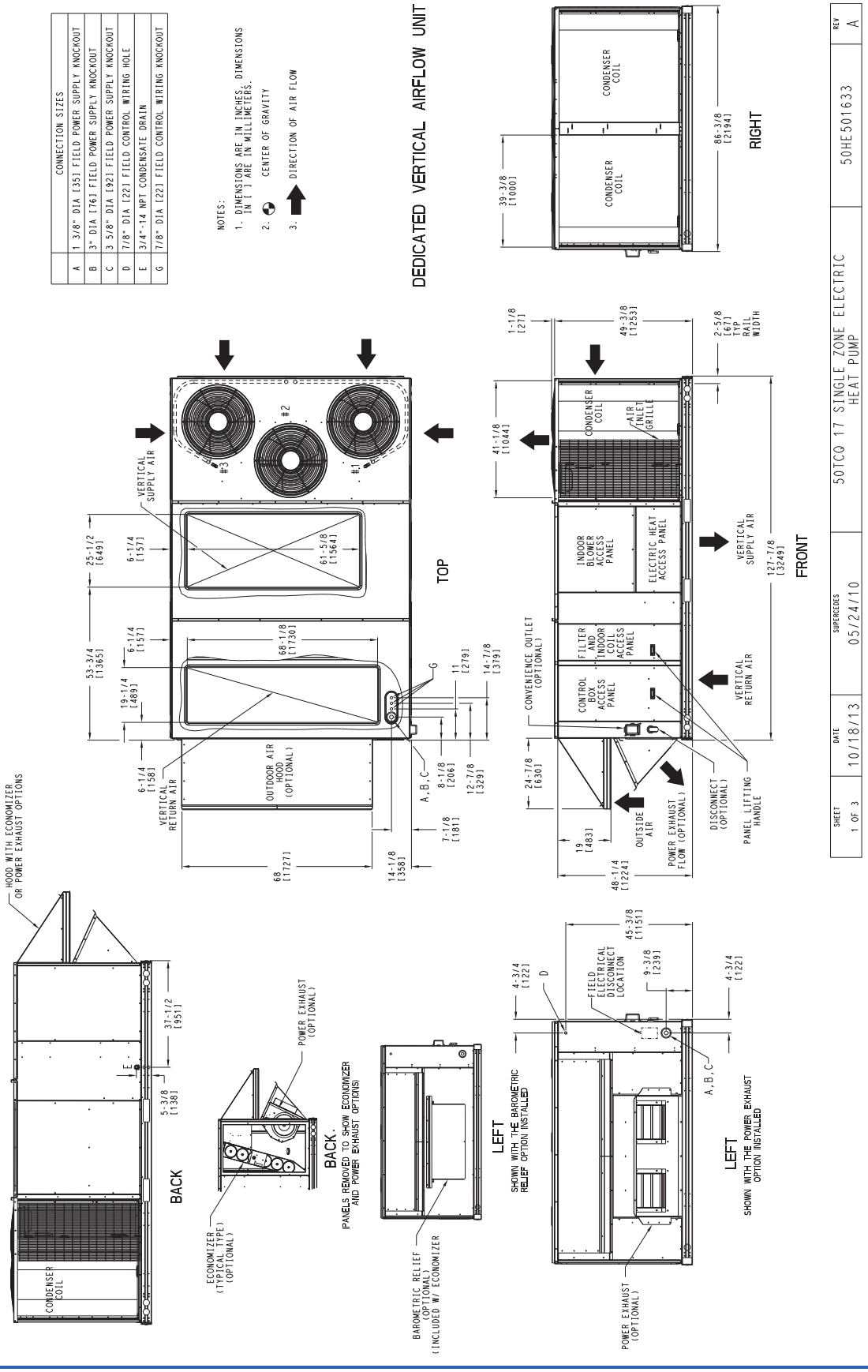

UNIT DIMENSIONAL DRAWING - SIZE 17 UNITS (cont)

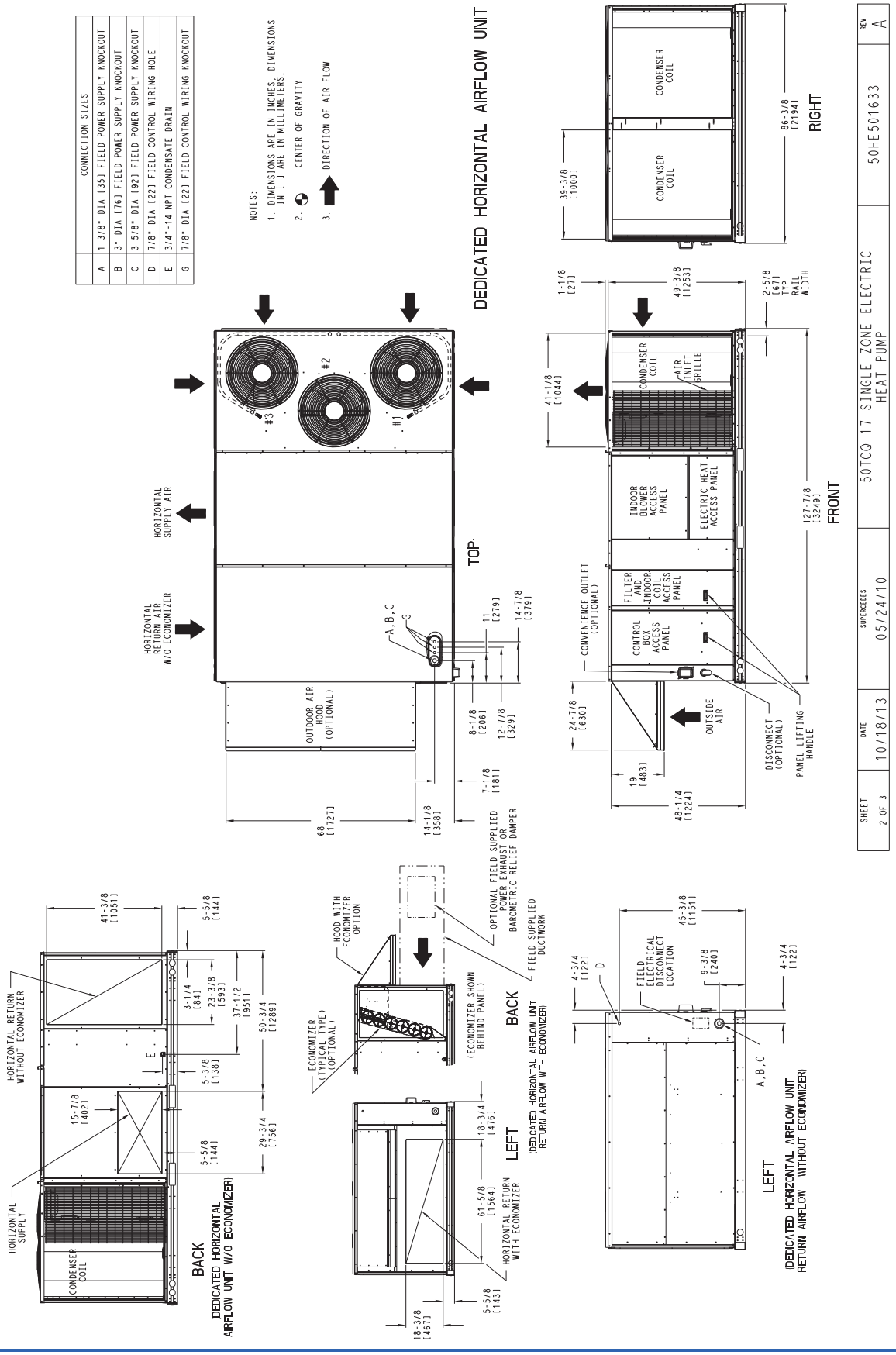

UNIT DIMENSIONAL DRAWING - SIZE 17 UNITS (cont)

UNIT	STD UNIT WEIGHT *		CORNER WEIGHT (A)		CORNER WEIGHT (B)		CORNER WEIGHT (C)		CORNER WEIGHT (D)		C.G.		
50TCQ17	LBS.	KB.	LBS.	KB.	LBS.	KB.	LBS.	KB.	LBS.	KB.	X	Y	Z
	1775	807	479	218	364	166	403	183	530	241	45 1/4 [1149]	55 1/4 [1403]	16 1/2 [419]

* Standard unit weight is without electric heat and without packaging.

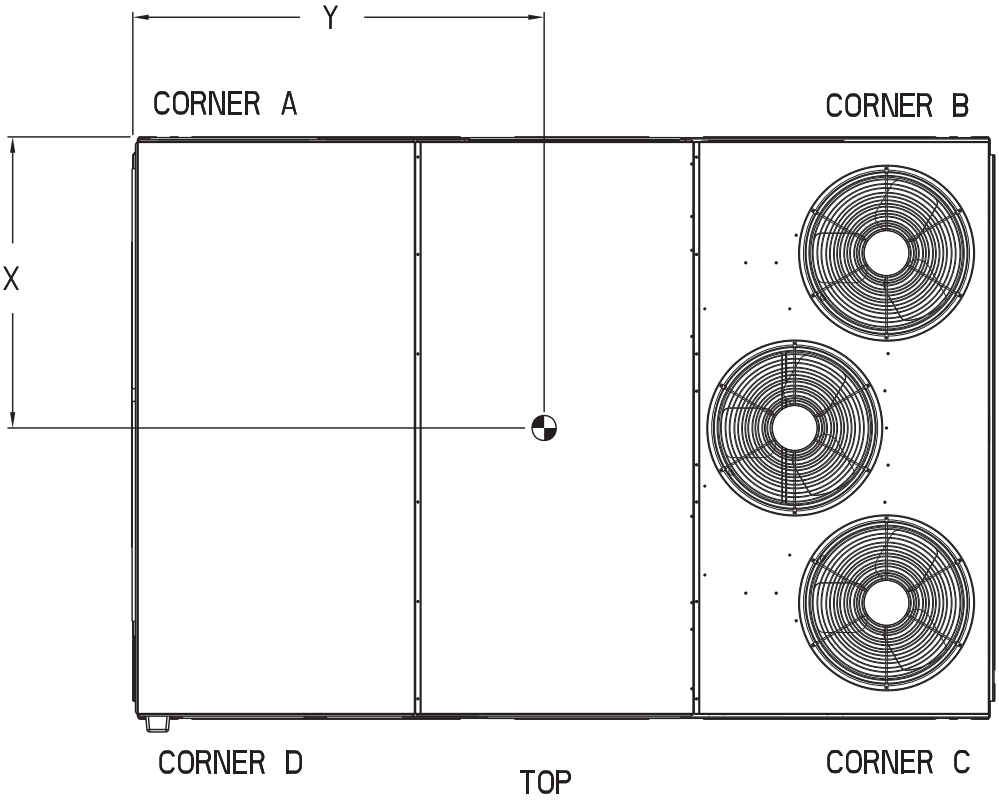

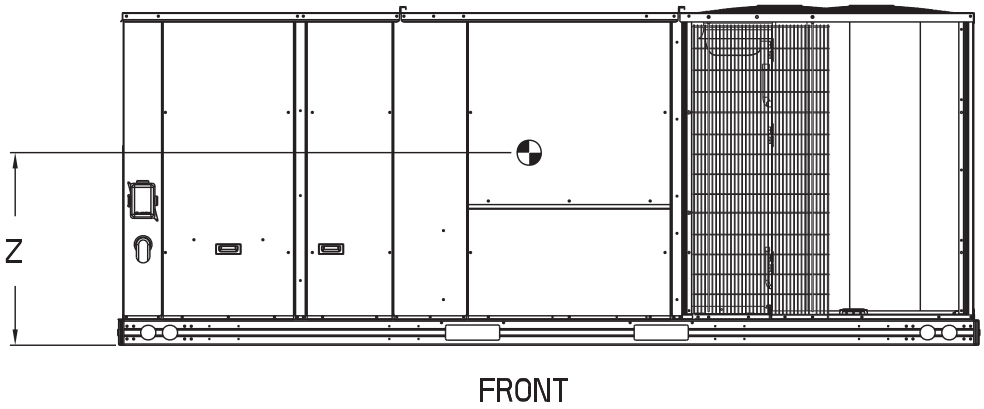

ROOF CURB DIMENSIONS — SIZE 17 UNITS

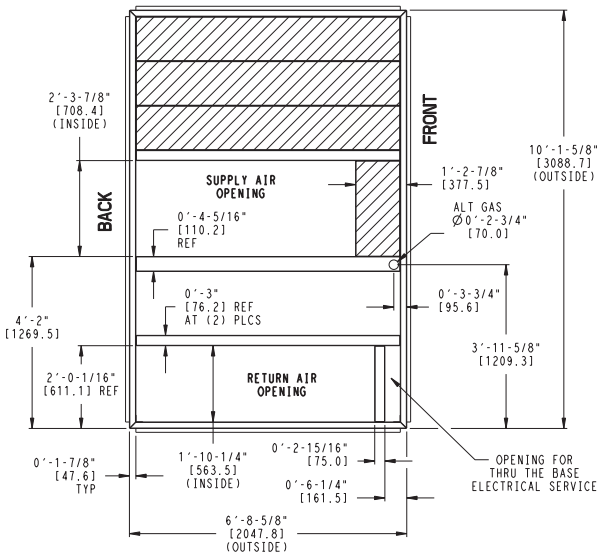

UNIT SIZE	"A"	ROOF CURB ACCESSORY
50TCQ17	1"-2" [356.0]	CRRFCURB045A00
	2"-0" [610.0]	CRRFCUBR046A00

NOTE:
1. Roof curb accessory is shipped unassembled.
2. Dimensions shown in [ ] are in millimeters.
3. Roof curb galvanized steel.
4. Attach ductwork to curb (flanges on duct rest on curb).
5. Service clearance 4 ft on each side.
6. ➡ Direction of air flow

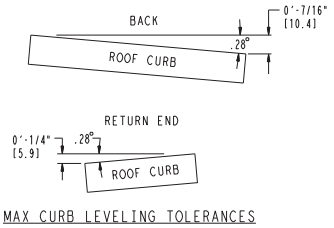

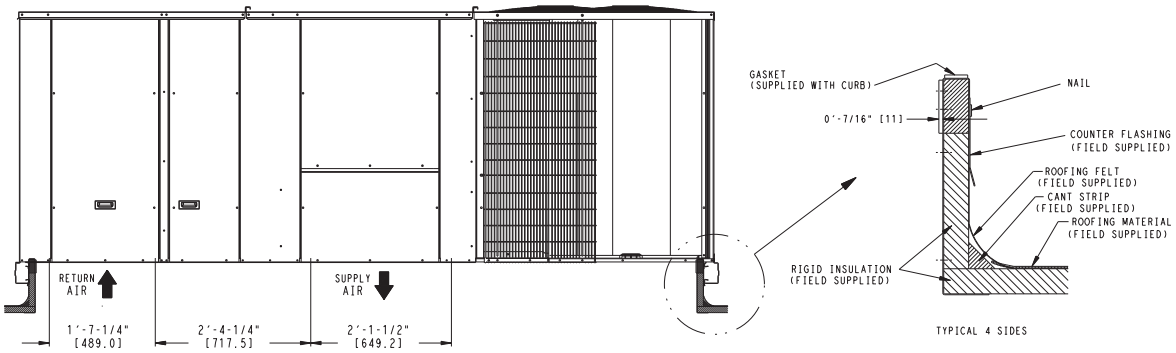

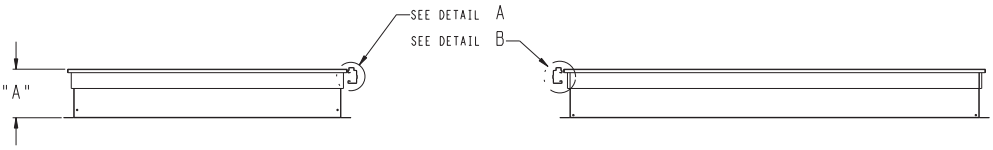

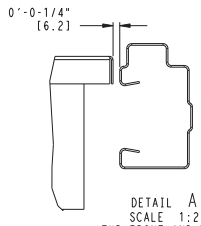

DETAIL A
SCALE 1:2
TYP FRONT AND BACK

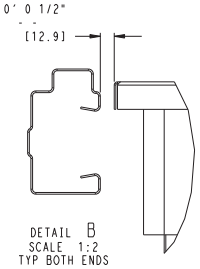

DETAIL B
SCALE 1:2
TYP BOTH ENDS

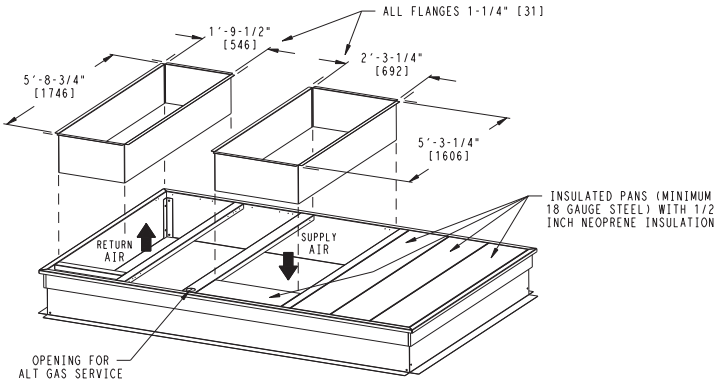

UNIT DIMENSIONAL DRAWING - SIZE 24 UNITS

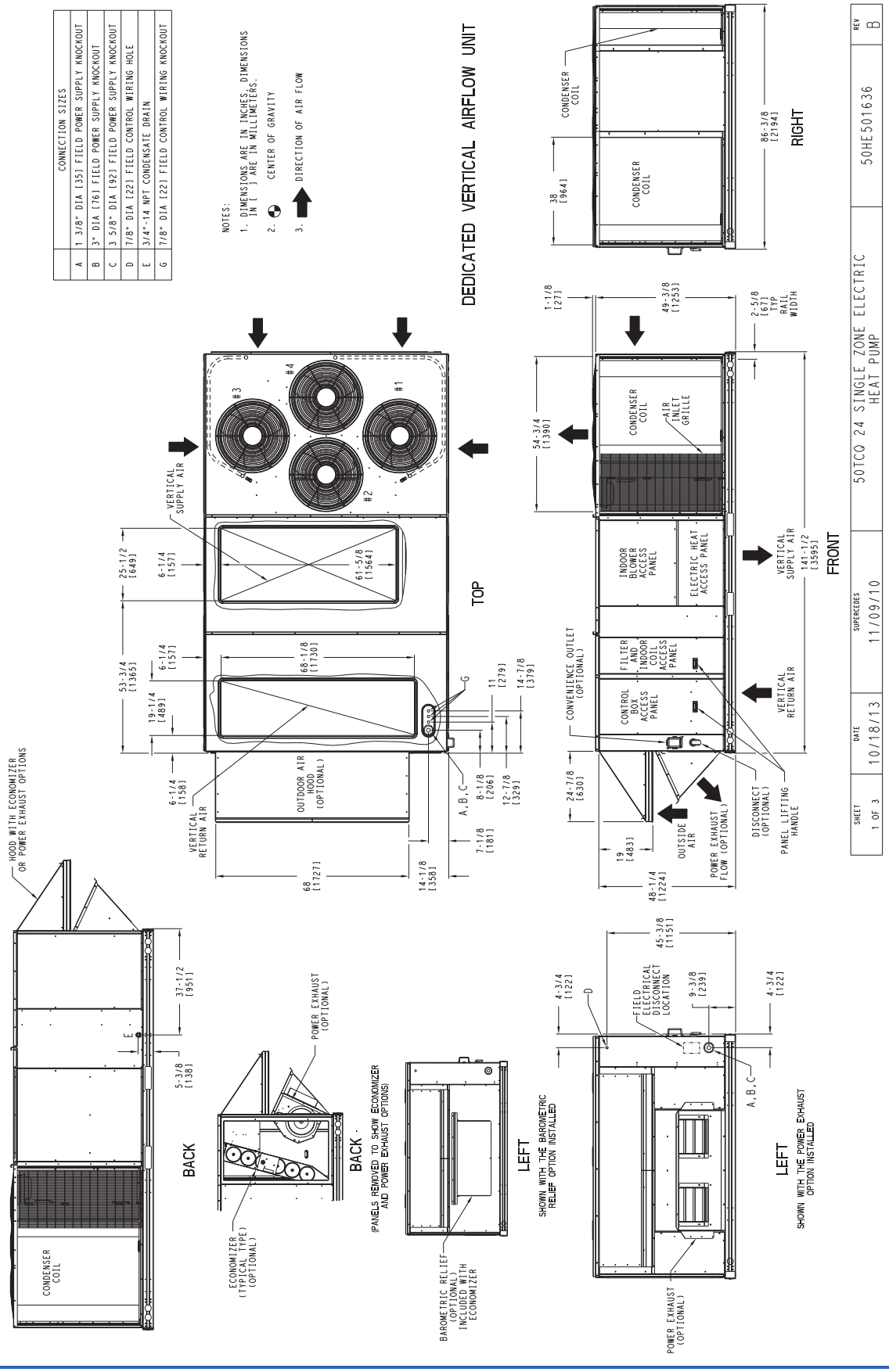

UNIT DIMENSIONAL DRAWING - SIZE 24 UNITS (cont)

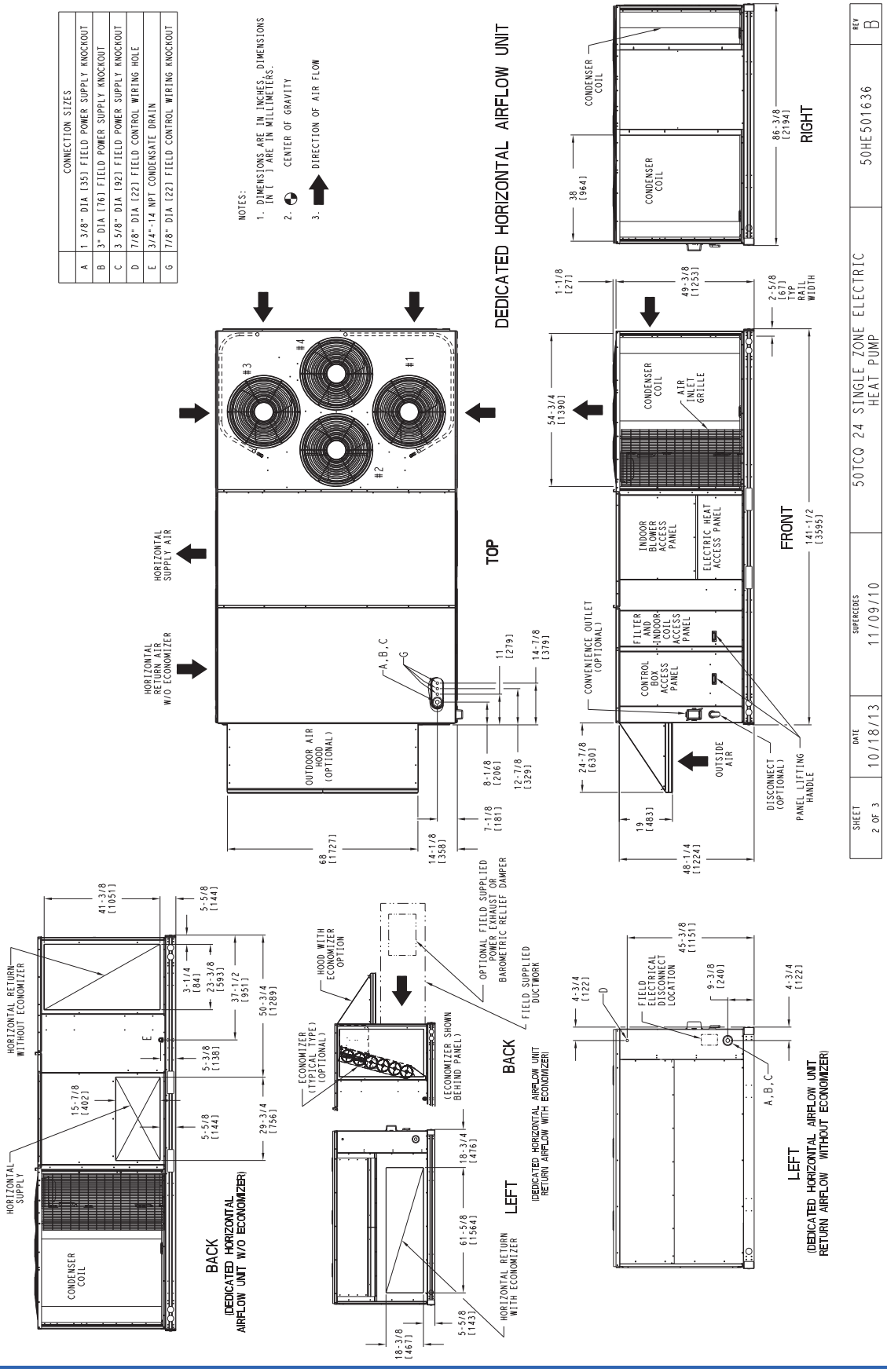

UNIT DIMENSIONAL DRAWING - SIZE 24 UNITS (cont)

UNIT	STD UNIT WEIGHT *		CORNER WEIGHT (A)		CORNER WEIGHT (B)		CORNER WEIGHT (C)		CORNER WEIGHT (D)		C.G.		
50TCQ24	LBS.	KB.	LBS.	KB.	LBS.	KB.	LBS.	KB.	LBS.	KB.	X	Y	Z
	2100	955	534	243	517	235	516	235	533	242	43 [1092]	69 1/2 [1765]	16 1/2 [419]

* Standard unit weight is without electric heat and without packaging.

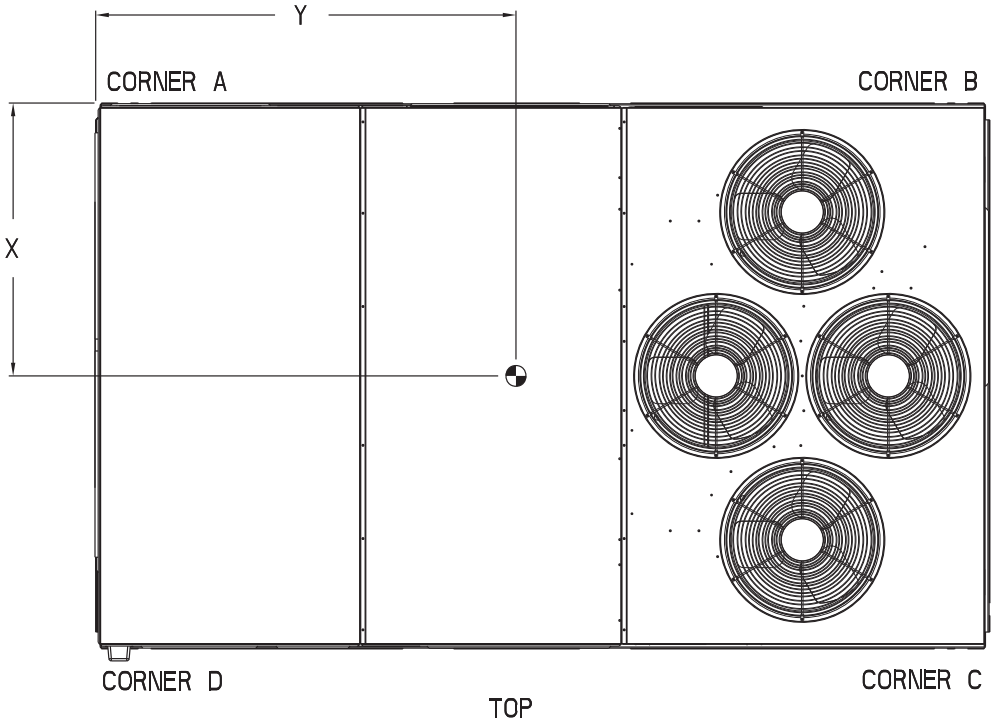

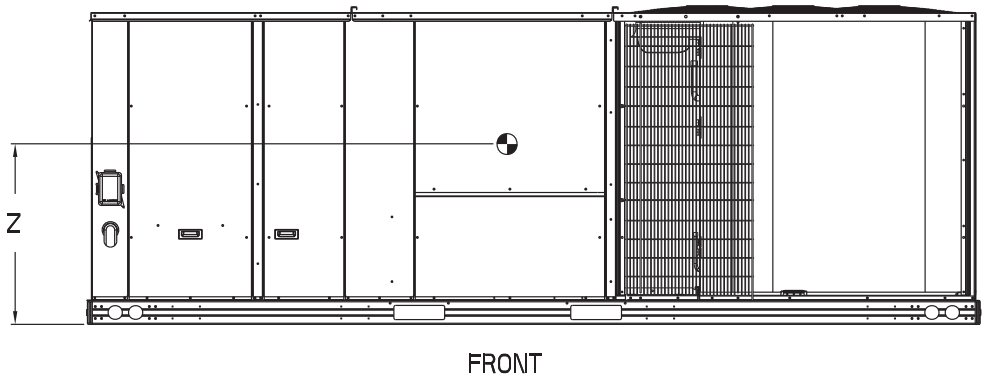

ROOF CURB DIMENSIONS — SIZE 24 UNITS

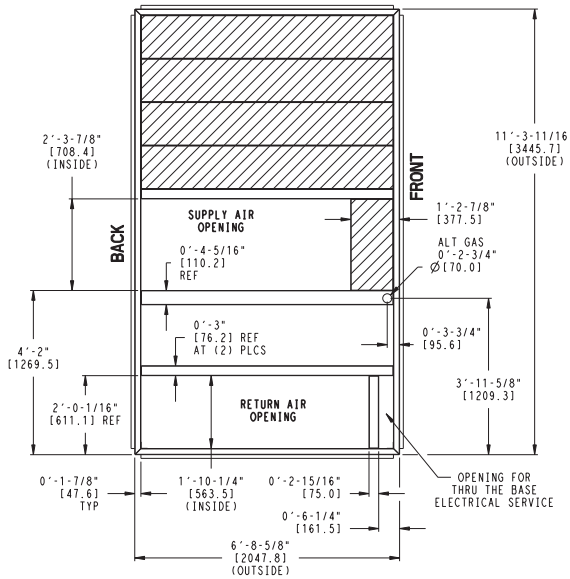

UNIT SIZE	"A"	ROOF CURB ACCESSORY
50TCQ24	1"-2" [356.0]	CRRFCURB047A00
	2"-0" [610.0]	CRRFCUBR048A00

NOTE:
1. Roof curb accessory is shipped unassembled.
2. Dimensions shown in [ ] are in millimeters.
3. Roof curb galvanized steel.
4. Attach ductwork to curb (flanges on duct rest on curb).
5. Service clearance 4 ft on each side.
6. ➡ Direction of air flow

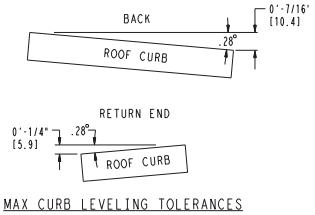

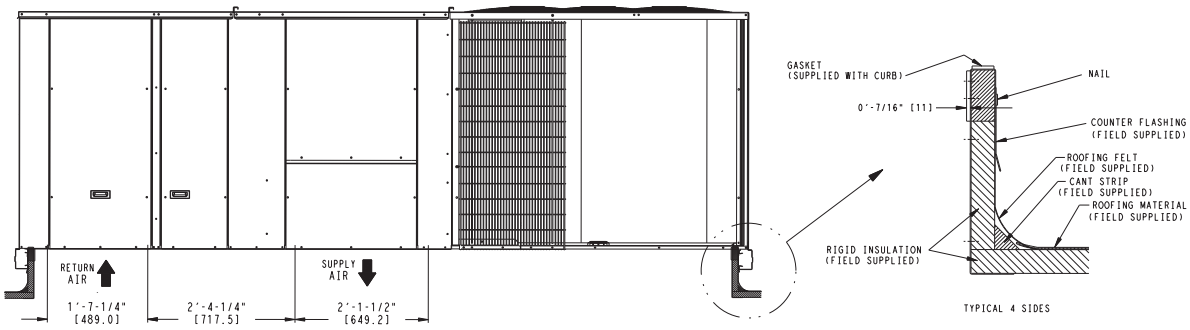

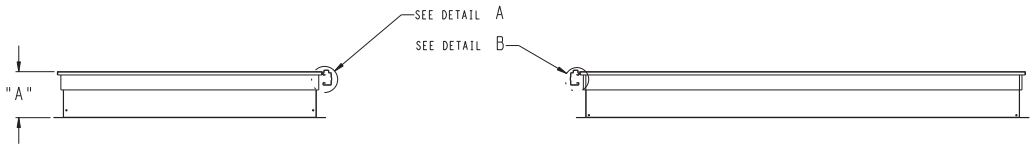

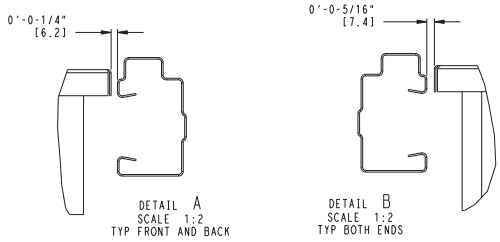

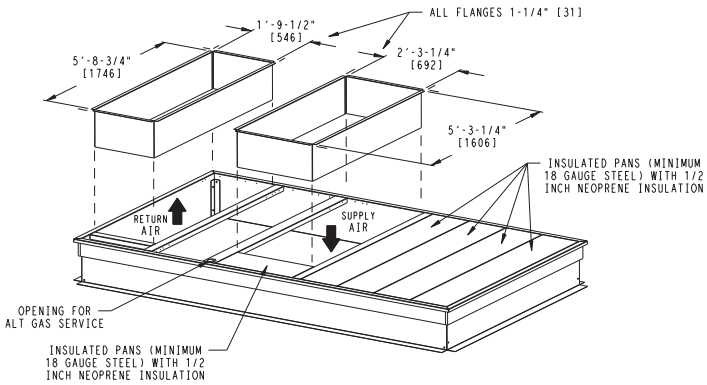

SERVICE CLEARANCE DIMENSIONAL DRAWING

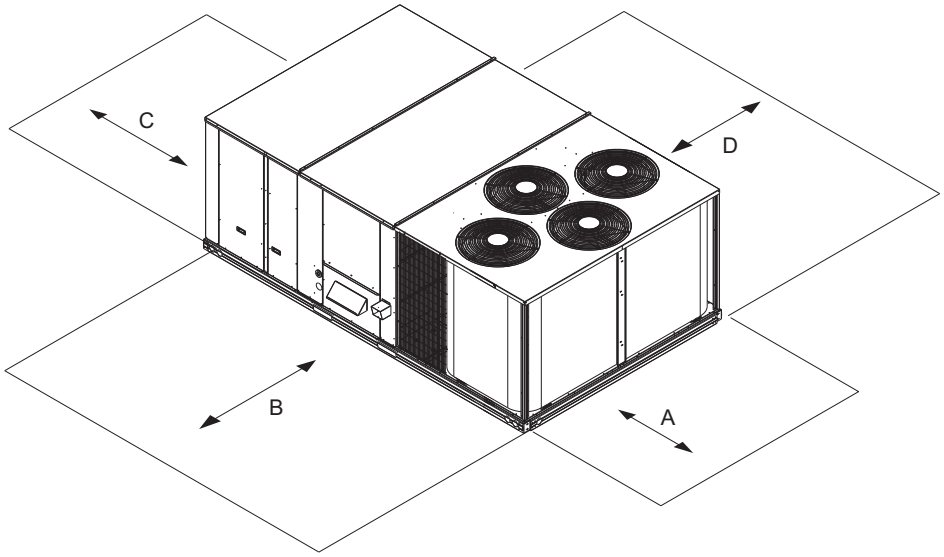

LOCATION	DIMENSION	CONDITION
A	36-in. (914 mm)	• Recommended clearance for air flow and service
B	42-in. (1067 mm)	• Recommended clearance for air flow and service
C	18-in. (457 mm)	• No Convenience Outlet • No Economizer • No field-installed disconnect on economizer hood side (factory-installed disconnect installed).
	36-in. (914 mm)	• Convenience Outlet installed. • Vertical surface behind servicer is electrically non-conductive (e.g.: wood, fiberglass).
	42-in. (1067 mm)	• Convenience Outlet installed. • Vertical surface behind servicer is electrically conductive (e.g.: metal, masonry).
	96-in. (2438 mm)	• Economizer and/or Power Exhaust installed. • Check for sources of flue products with 10 feet (3 meters) of economizer fresh air intake.
D	42-in. (1067 mm)	• Recommended clearance for service.

NOTE: Unit not designed to have overhead obstruction. Contact Application Engineering for guidance on any application planning overhead obstruction or for vertical clearances.

Application data

Min operating ambient temp (cooling)

In mechanical cooling mode, your Carrier rooftop unit can safely operate down to an outdoor ambient temperature of 30°F (–1°C). It is possible to provide cooling at lower outdoor ambient temperatures by using less outside air, economizers, and/or accessory low ambient kits.

Max operating ambient temp (cooling)

The maximum operating ambient temperature for cooling mode is 115°F (46°C). While cooling operation above 115°F (46°C) may be possible, it could cause either a reduction in performance, reliability, or a protective action by the unit's internal safety devices.

Min and max airflow (cooling mode)

To maintain safe and reliable operation of your rooftop, operate within the cooling airflow limits. Operating above the max may cause blow-off, undesired airflow noise, or airflow related problems with the rooftop unit. Operating below the min may cause problems with coil freeze-up.

Airflow

All units are draw-through in cooling mode.

Outdoor air application strategies

Economizers reduce operating expenses and compressor run time by providing a free source of cooling and a means of ventilation to match application changing needs. In fact, they should be considered for most applications. Also, consider the various economizer control methods and their benefits, as well as sensors required to accomplish your application goals. Please contact your local Carrier representative for assistance.

Motor limits, break horsepower (BHP)

Due to Carrier's internal unit design, air path, and specially designed motors, the full horsepower (maximum continuous BHP) band, as listed in the Physical Data, can be used with the utmost confidence. There is no need for extra safety factors, as Carrier's motors are designed and rigorously tested to use the entire, listed BHP range without either nuisance tripping or premature motor failure.

Sizing a rooftop

Bigger isn't necessarily better. While an air conditioner needs to have enough capacity to meet the design loads, it doesn't need excess capacity. In fact, excess capacity typically results in very poor part load performance and humidity control.

Using higher design temperatures than ASHRAE recommends for your location, adding "safety factors" to the calculated load, and rounding up to the next largest unit, are all signs of oversizing air conditioners. Oversizing can cause short-cycling, and short cycling leads to poor humidity control, reduced efficiency, higher utility bills, drastic indoor temperature swings, excessive noise, and increased wear and tear on the air conditioner. Rather than oversizing an air conditioner, wise contractors and engineers "right-size" or even slightly undersize air conditioners. Correctly sizing an air conditioner controls humidity better; promotes efficiency; reduces utility bills; extends equipment life, and maintains even, comfortable temperatures.

Low ambient applications

When equipped with a Carrier economizer, your rooftop unit can cool your space by bringing in fresh, cool outside air. In fact, when so equipped, accessory low-ambient kit may not be necessary. In low ambient conditions, unless the outdoor air is excessively humid or contaminated, economizer-based "free cooling" is the preferred less costly and energy conscious method.

In low ambient applications where outside air might not be desired (such as contaminated or excessively humid outdoor environments), your Carrier rooftop can operate to ambient temperatures down to –20°F (–29°C) using the recommended accessory Motormaster low ambient controller.

Application/selection option

Selection software by Carrier saves time by performing many of the steps above. Contact your Carrier sales representative for assistance.

DAMPER, BAROMETRIC RELIEF AND POWER EXHAUST PERFORMANCE

MANUAL DAMPER PERFORMANCE

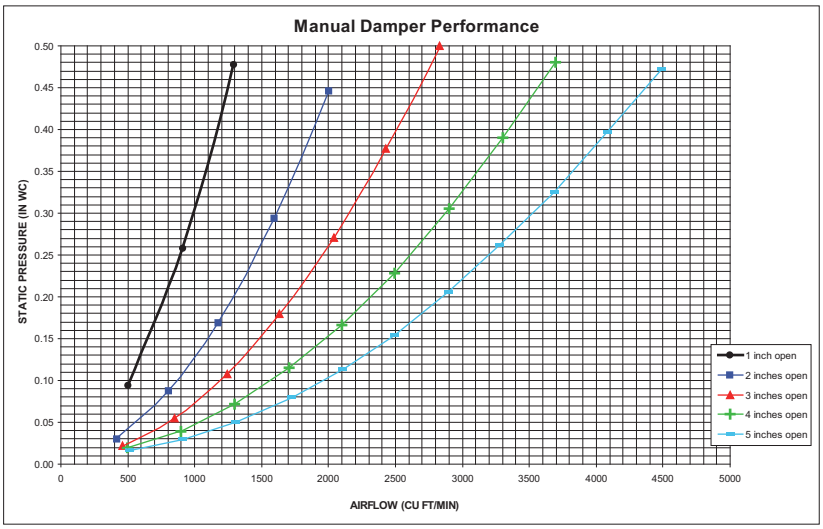

BAROMETRIC RELIEF FLOW CAPACITY

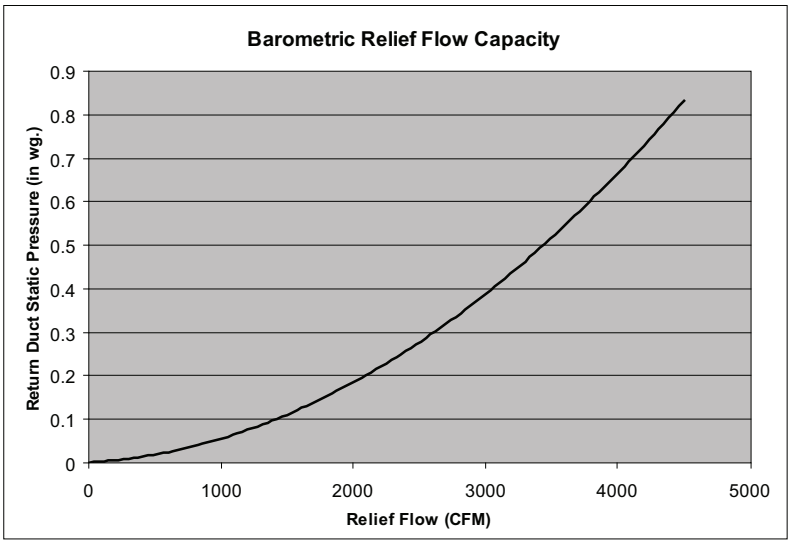

POWER EXHAUST FAN PERFORMANCE

Power Exhaust Fan Performance - 50TCQ 17, 24

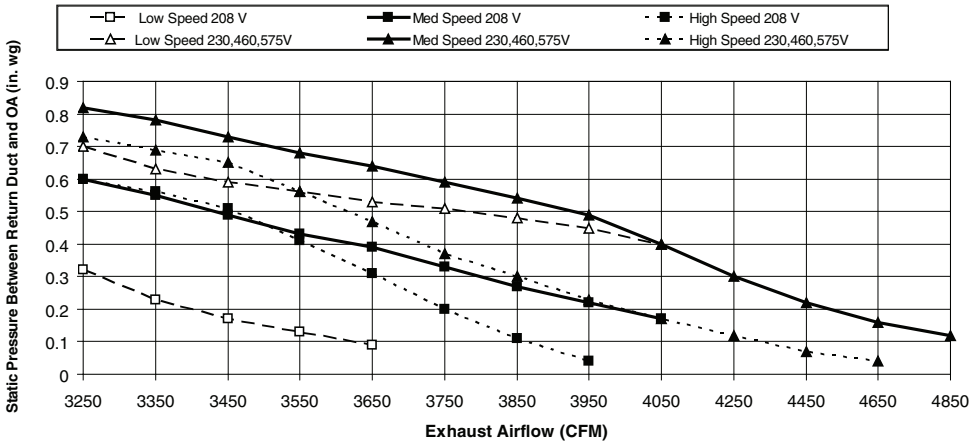

GENERAL FAN PERFORMANCE NOTES

1. Interpolation is permissible. Do not extrapolate.
2. External static pressure is the static pressure difference between the return duct and the supply duct plus the static pressure caused by any Factory-installed options (FIOPs) or accessories.
3. Tabular data accounts for pressure loss due to clean filters, unit casing, and wet coils. Factory options and accessories may add static pressure losses as shown in STATIC PRESSURE ADDERS table below. Selection software is available, through your salesperson, to help you select the best motor/drive combination for your application.
4. The Fan Performance tables offer motor/drive recommendations. In cases when two motor/drive combinations would work, Carrier recommended the lower horsepower option.
5. For information on the electrical properties of Carrier motors, please see the Electrical information section of this book.
6. For more information on the performance limits of Carrier motors, see the application data section of this book.

STATIC PRESSURE ADDERS

ECONOMIZER - VERTICAL AND HORIZONTAL DUCT CONFIGURATION

MODEL SIZES 17 AND 24										
CFM	**4750**	**5750**	**6750**	**7750**	**8750**	**9750**	**10,750**	**11,750**	**12,750**	**13,750**
Static Pressure adder (in. wg)	0.00	0.01	0.01	0.02	0.03	0.05	0.06	0.07	0.09	0.11

ELECTRIC HEATERS - VERTICAL AND HORIZONTAL DUCT CONFIGURATION

MODEL SIZES 17 AND 24										
CFM	**4750**	**5750**	**6750**	**7750**	**8750**	**9750**	**10,750**	**11,750**	**12,750**	**13,750**
25 kW HEATER	0.01	0.02	0.03	0.04	0.05	0.06	0.08	0.09	0.11	0.13
50 kW HEATER	0.02	0.03	0.05	0.07	0.10	0.12	0.15	0.19	0.22	0.26
75 kW HEATER	0.03	0.05	0.08	0.11	0.14	0.18	0.23	0.28	0.34	0.40

Performance data (cont)

50TCQD17 — 15 TON VERTICAL SUPPLY/RETURN

CFM	AVAILABLE EXTERNAL STATIC PRESSURE (IN. WG)																			
	0.2		0.4		0.6		0.8		1.0		1.2		1.4		1.6		1.8		2.0	
	RPM	BHP	RPM	BHP	RPM	BHP	RPM	BHP	RPM	BHP	RPM	BHP	RPM	BHP	RPM	BHP	RPM	BHP	RPM	BHP
4500	**436**	**0.60**	529	0.89	611	1.20	684	1.54	749	1.90	808	2.27	864	2.66	916	3.06	965	3.48	*1012*	*3.92*
4900	**458**	**0.72**	546	1.02	625	1.36	696	1.72	760	2.09	819	2.48	874	2.89	926	3.31	975	3.74	*1021*	*4.19*
5250	**479**	**0.85**	561	1.16	638	1.51	708	1.88	771	2.27	829	2.68	884	3.10	935	3.53	983	3.98	*1029*	*4.44*
5650	**503**	**1.01**	580	1.33	654	1.70	721	2.09	784	2.50	841	2.92	895	3.36	946	3.81	994	4.28	*1040*	*4.76*
6000	525	1.17	598	1.50	668	1.88	734	2.28	795	2.71	852	3.15	906	3.61	956	4.04	1003	4.56	—	—
6400	551	1.38	619	1.72	686	2.11	750	2.53	810	2.97	865	3.43	918	3.91	968	4.40	*1015*	*4.90*	—	—
6750	574	1.58	638	1.93	702	2.33	764	2.76	822	3.22	878	3.70	929	4.19	979	4.69	—	—	—	—
7150	601	1.84	661	2.20	722	2.61	781	3.06	838	3.53	892	4.03	943	4.53	—	—	—	—	—	—
7500	625	2.09	682	2.46	740	2.88	797	3.34	852	3.82	905	4.33	955	4.86	—	—	—	—	—	—

LEGEND

— STD Static - 514-680 RPM, 2.9 Max BHP
— MED Static - 679-863 RPM, 3.7 Max BHP
— HIGH Static - 826-1009 RPM, 4.9 MaxBHP
— — Outside operating range
ITALIC — Requires high static drive package with different motor pulley
BOLD — Requires alternate standard static drive package

50TCQD17 — 15 TON HORIZONTAL SUPPLY/RETURN

CFM	AVAILABLE EXTERNAL STATIC PRESSURE (IN. WG)																			
	0.2		0.4		0.6		0.8		1.0		1.2		1.4		1.6		1.8		2.0	
	RPM	BHP	RPM	BHP	RPM	BHP	RPM	BHP	RPM	BHP	RPM	BHP	RPM	BHP	RPM	BHP	RPM	BHP	RPM	BHP
4500	472	1.04	549	1.12	616	2.03	676	2.59	731	3.19	781	3.81	828	4.46	—	—	—	—	—	—
4900	500	1.26	573	1.40	638	2.30	696	2.89	750	3.51	799	4.16	845	4.84	—	—	—	—	—	—
5250	525	1.48	595	1.60	658	2.57	715	3.18	767	3.82	816	4.49	—	—	—	—	—	—	—	—
5650	554	1.76	620	1.82	681	2.90	736	3.54	787	4.21	—	—	—	—	—	—	—	—	—	—
6000	580	2.04	643	2.10	702	3.22	756	3.88	806	4.58	—	—	—	—	—	—	—	—	—	—
6400	610	2.39	670	2.41	727	3.64	779	4.32	—	—	—	—	—	—	—	—	—	—	—	—
6750	636	2.74	695	2.70	749	4.03	800	4.74	—	—	—	—	—	—	—	—	—	—	—	—
7150	667	3.18	723	3.02	775	4.52	—	—	—	—	—	—	—	—	—	—	—	—	—	—
7500	694	3.60	748	3.42	—	—	—	—	—	—	—	—	—	—	—	—	—	—	—	—

LEGEND

— STD Static - 514-680 RPM, 3.7 Max BHP
— MED Static - 614-780 RPM, 3.7 Max BHP
— HIGH Static - 746-912 RPM, 4.9 Max BHP
— — Outside operating range
ITALIC — Requires high static drive package with different motor pulley
BOLD — Requires alternate standard static drive package

50TCQD24 — 20 TON VERTICAL SUPPLY/RETURN

CFM	AVAILABLE EXTERNAL STATIC PRESSURE (IN. WG)																			
	0.2		0.4		0.6		0.8		1.0		1.2		1.4		1.6		1.8		2.0	
	RPM	BHP	RPM	BHP	RPM	BHP	RPM	BHP	RPM	BHP	RPM	BHP	RPM	BHP	RPM	BHP	RPM	BHP	RPM	BHP
6000	**519**	**1.13**	**609**	**1.48**	**682**	**1.80**	747	2.13	806	2.46	861	2.80	912	3.15	962	3.50	1008	3.86	1053	4.23
6500	**545**	**1.36**	**633**	**1.75**	705	2.11	768	2.46	826	2.82	880	3.18	930	3.55	978	3.92	1024	4.30	1068	4.69
7000	**571**	**1.63**	**658**	**2.06**	728	2.45	791	2.83	847	3.21	900	3.60	949	3.99	996	4.38	1041	4.78	1085	5.19
7500	**597**	**1.93**	**683**	**2.40**	753	2.83	814	3.24	869	3.65	921	4.06	969	4.47	1016	4.89	1060	5.31	1102	5.74
8000	**624**	**2.27**	709	2.78	777	3.25	837	3.69	892	4.13	943	4.57	990	5.00	1036	5.44	1079	5.89	1121	6.34
8500	**650**	**2.64**	734	3.20	802	3.71	861	4.19	915	4.66	965	5.12	1012	5.58	1056	6.05	1099	6.52	1140	6.99
9000	**677**	**3.05**	760	3.67	827	4.21	886	4.73	939	5.23	988	5.72	1034	6.21	1078	6.70	1120	7.19	1160	7.69
9500	703	3.50	786	4.17	853	4.76	910	5.31	963	5.85	1011	6.37	1057	6.89	1100	7.41	1141	7.93	*1181*	*8.45*
10000	730	3.99	813	4.73	878	5.36	935	5.95	987	6.52	1035	7.07	1080	7.62	1123	8.17	1163	8.72	—	—

LEGEND

- — STD Static - 690-863 RPM, Max BHP 4.9
- — MED Static - 835-1021 RPM, Max BHP 6.5
- — HIGH Static - 941-1176 RPM, Max BHP 8.7
- — — Outside operating range
- **BOLD** — Requires alternate standard static drive package
- *ITALIC* — Requires high static drive package with different motor pulley

50TCQD24 — 20 TON HORIZONTAL SUPPLY/RETURN

CFM	AVAILABLE EXTERNAL STATIC PRESSURE (IN. WG)																			
	0.2		0.4		0.6		0.8		1.0		1.2		1.4		1.6		1.8		2.0	
	RPM	BHP	RPM	BHP	RPM	BHP	RPM	BHP	RPM	BHP	RPM	BHP	RPM	BHP	RPM	BHP	RPM	BHP	RPM	BHP
6000	580	2.04	**643**	**2.61**	702	3.22	756	3.88	806	4.58	853	5.31	**897**	**6.06**	**939**	**6.84**	**979**	**7.64**	1017	8.47
6500	**617**	**2.49**	**677**	**3.09**	733	3.74	785	4.44	833	5.17	**879**	**5.93**	**922**	**6.71**	**963**	**7.52**	1002	8.36	1040	9.22
7000	**656**	**3.01**	712	3.65	765	4.33	815	5.06	862	5.82	**906**	**6.61**	**948**	**7.43**	**988**	**8.28**	1027	9.15	1064	10.05
7500	694	3.60	748	4.28	798	5.00	846	5.76	**891**	**6.55**	**934**	**7.38**	**975**	**8.23**	1015	9.11	1052	10.02	—	—
8000	733	4.28	784	4.99	832	5.74	**878**	**6.53**	**922**	**7.36**	**963**	**8.22**	1003	9.11	1042	10.02	—	—	—	—
8500	773	5.04	821	5.78	**867**	**6.57**	**911**	**7.40**	**953**	**8.26**	993	9.15	1032	10.07	—	—	—	—	—	—
9000	813	5.89	**859**	**6.67**	**902**	**7.49**	945	8.35	985	9.25	1024	10.17	—	—	—	—	—	—	—	—
9500	853	6.83	**896**	**7.65**	939	8.51	979	9.40	1018	10.33	—	—	—	—	—	—	—	—	—	—
10000	**893**	**7.88**	**935**	**8.73**	975	9.63	—	—	—	—	—	—	—	—	—	—	—	—	—	—

LEGEND

- — STD Static - 690-863 RPM, 6.5 Max BHP
- — MED Static – 835-1021 RPM, Max BHP 6.5
- — HIGH Static – 941-1176 RPM, Max BHP 8.7
- — — Outside operating range
- **BOLD** — Field supplied drive
- **Underscore** — Field supplied drive changes with high static motor required: blower pulley KR51BL017

PULLEY ADJUSTMENT — VERTICAL AIRFLOW UNITS

50TCQ UNIT	MOTOR/DRIVE COMBO	MOTOR PULLEY TURNS OPEN										
		0.0	0.5	1.0	1.5	2.0	2.5	3.0	3.5	4.0	4.5	5.0
17	Standard Static	680	663	647	630	614	597	580	564	547	531	514
	Medium Static	863	845	826	808	789	771	753	734	716	697	679
	High Static	1009	991	972	954	936	918	899	881	863	844	826
24	Standard Static	863	846	828	811	794	777	759	742	725	707	690
	Medium Static	1021	1002	984	965	947	928	909	891	872	854	835
	High Static	1176	1153	1129	1106	1082	1059	1035	1012	988	965	941

NOTE: Do not adjust pulley further than 5 turns open.

— Factory settings

PULLEY ADJUSTMENT — HORIZONTAL AIRFLOW UNITS

50TCQ UNIT	MOTOR/DRIVE COMBO	MOTOR PULLEY TURNS OPEN										
		0.0	0.5	1.0	1.5	2.0	2.5	3.0	3.5	4.0	4.5	5.0
17	Standard Static	680	663	647	630	614	597	580	564	547	531	514
	Medium Static	780	763	747	730	714	697	680	664	647	631	614
	High Static	912	895	879	862	846	829	812	796	779	763	746
24	Standard Static	N/A	N/A	N/A	N/A	N/A	N/A	N/A	N/A	N/A	N/A	N/A
	Medium Static	1021	1002	984	965	947	928	909	891	872	854	835
	High Static	1176	1153	1129	1106	1082	1059	1035	1012	988	965	941

NOTE: Do not adjust pulley further than 5 turns open.

— Factory settings

N/A — Not available

LEGEND AND NOTES

Applicable for Electrical Data Tables on pages 30-44

LEGEND

BRKR	—	Circuit breaker
C.O.	—	Convenience outlet
DISC	—	Disconnect
FLA	—	Full load amps
IFM	—	Indoor fan motor
LRA	—	Locked rotor amps
MCA	—	Minimum circuit amps
PE	—	Power exhaust
Pwrd fr/unit	—	Powered from unit
PWRD C.O.	—	Powered convenience outlet
RLA	—	Rated load amps
UNPWR C.O.	—	Un-powered convenience outlet

NOTES

1. In compliance with NEC requirements for multi-motor and combination load equipment (refer to NEC Articles 430 and 440), the overcurrent protective device for the unit shall be fuse or HACR breaker. Canadian units may be fuse or circuit breaker.
2. For 208/230 v units, where one value is shown it is the same for either 208 or 230 volts.
3. Unbalanced 3-Phase Supply Voltage
   Never operate a motor where a phase imbalance in supply voltage is greater than 2%. Use the following formula to determine the percentage of voltage imbalance.

$$\% \text{ Voltage Imbalance} = 100 \times \frac{\text{max voltage deviation from average voltage}}{\text{average voltage}}$$

Example: Supply voltage is 230-3-60

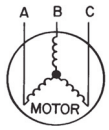

AB = 224 v

BC = 231 v

AC = 226 v

$$\text{Average Voltage} = \frac{(224 + 231 + 226)}{3} = \frac{681}{3} = 227$$

Determine maximum deviation from average voltage.
(AB) 227 – 224 = 3 v
(BC) 231 – 227 = 4 v
(AC) 227 – 226 = 1 v
Maximum deviation is 4 v.
Determine percent of voltage imbalance.

$$\% \text{ Voltage Imbalance} = 100 \times = \frac{4}{227} = 1.76\%$$

This amount of phase imbalance is satisfactory as it is below the maximum allowable 2%.

IMPORTANT: If the supply voltage phase imbalance is more than 2%, contact your local electric utility company immediately.

Electrical data (cont)

2-STAGE VERTICAL COOLING UNITS WITH SINGLE SPEED INDOOR FAN MOTOR

UNIT	V-PH-Hz	VOLTAGE RANGE		COMP 1		COMP 2		OFM (EA)		IFM		
		Min	Max	RLA	LRA	RLA	LRA	Watts	FLA	Type	Eff at Full Load	FLA
50TCQD17	208-3-60	187	253	25.0	164	25.0	164	350	1.5	STD	81.3%	7.5
										MED	87.0%	10.6
										HIGH	82.9%	13.6
	230-3-60	187	253	25.0	164	25.0	164	350	1.5	STD	81.3%	7.5
										MED	87.0%	10.6
										HIGH	82.9%	12.7
	460-3-60	414	506	12.2	100	12.2	100	277	0.9	STD	81.3%	3.4
										MED	87.0%	5.3
										HIGH	82.9%	6.4
	575-3-60	518	633	9.0	78	9.0	78	397	0.6	STD	81.1%	2.8
										MED	81.1%	2.8
										HIGH	83.6%	5.6
50TCQD24	208-3-60	187	253	30.1	225	33.3	239	350	1.5	STD	82.9%	13.6
										MED	89.5%	17.1
										HIGH	91.7%	28.5
	230-3-60	187	253	30.1	225	33.3	239	350	1.5	STD	82.9%	12.7
										MED	89.5%	17.1
										HIGH	91.7%	28.5
	460-3-60	414	506	16.7	114	17.9	125	277	0.9	STD**	82.9%	6.4
										MED	89.5%	8.6
										HIGH	91.7%	14.3
	575-3-60	518	633	12.2	80	12.8	80	397	0.6	STD**	83.6%	5.6
										MED	89.5%	7.6
										HIGH	91.7%	9.5

** STD IFM not available on horizontal 50TCQD24. STD IFM is available on vertical 50TCQD24.
See Legend and Notes on page 29.

2-STAGE HORIZONTAL COOLING UNITS WITH SINGLE SPEED INDOOR FAN MOTOR

UNIT	V-PH-Hz	VOLTAGE RANGE		COMP 1		COMP 2		OFM (EA)		IFM		
		Min	Max	RLA	LRA	RLA	LRA	Watts	FLA	Type	Eff at Full Load	FLA
50TCQD17	208-3-60	187	253	25.0	164	25.0	164	350	1.5	STD	87.0%	10.6
										MED	87.0%	10.6
										HIGH	82.9%	13.6
	230-3-60	187	253	25.0	164	25.0	164	350	1.5	STD	87.0%	10.6
										MED	87.0%	10.6
										HIGH	82.9%	12.7
	460-3-60	414	506	12.2	100	12.2	100	277	0.9	STD	87.0%	5.3
										MED	87.0%	5.3
										HIGH	82.9%	6.4
	575-3-60	518	633	9.0	78	9.0	78	397	0.6	STD	81.1%	2.8
										MED	81.1%	2.8
										HIGH	83.6%	5.6
50TCQD24	208-3-60	187	253	30.1	225	33.3	239	350	1.5	STD	89.5%	17.1
										MED	89.5%	17.1
										HIGH	91.7%	28.5
	230-3-60	187	253	30.1	225	33.3	239	350	1.5	STD**	89.5%	17.1
										MED	89.5%	17.1
										HIGH	91.7%	28.5
	460-3-60	414	506	16.7	114	17.9	125	277	0.9	STD**	89.5%	8.6
										MED	89.5%	8.6
										HIGH	91.7%	14.3
	575-3-60	518	633	12.2	80	12.8	80	397	0.6	STD**	83.6%	5.6
										MED	89.5%	7.6
										HIGH	91.7%	9.5

** STD IFM not available on horizontal 50TCQD24. STD IFM is available on vertical 50TCQD24.
See Legend and Notes on page 29.

Electrical data (cont)

2-STAGE VERTICAL AND HORIZONTAL COOLING UNITS WITH 2-SPEED INDOOR FAN MOTOR

UNIT	V-PH-Hz	VOLTAGE RANGE		COMP 1		COMP 2		OFM (EA)		IFM		
		Min	Max	RLA	LRA	RLA	LRA	Watts	FLA	Type	Eff at Full Load	FLA
50TCQD17	208-3-60	187	253	25.0	164	25.0	164	350	1.5	STD	85.0%	8.6
										MED	81.5%	10.8
										HIGH	83.6%	13.6
	230-3-60	187	253	25.0	164	25.0	164	350	1.5	STD	85.0%	7.8
										MED	81.5%	9.8
										HIGH	83.6%	12.7
	460-3-60	414	506	12.2	100	12.2	100	277	0.9	STD	85.0%	3.8
										MED	81.5%	4.9
										HIGH	83.6%	6.4
	575-3-60	518	633	9.0	78	9.0	78	397	0.6	STD	81.1%	4.5
										MED	81.1%	4.5
										HIGH	83.6%	6.2
50TCQD24	208-3-60	187	253	30.1	225	33.3	239	350	1.5	STD**	83.6%	13.6
										MED	89.5%	17.1
										HIGH	91.7%	28.5
	230-3-60	187	253	30.1	225	33.3	239	350	1.5	STD**	83.6%	12.7
										MED	89.5%	17.1
										HIGH	91.7%	28.5
	460-3-60	414	506	16.7	114	17.9	125	277	0.9	STD**	83.6%	6.4
										MED	89.5%	8.6
										HIGH	91.7%	14.3
	575-3-60	518	633	12.2	80	12.8	80	397	0.6	STD**	83.6%	6.2
										MED	89.5%	7.6
										HIGH	91.7%	9.5

** STD IFM not available on horizontal 50TCQD24. STD IFM is available on vertical 50TCQD24.
See Legend and Notes on page 29.

UNIT WIRE/FUSE OR HACR BREAKER SIZING DATA
WITH FACTORY-INSTALLED SINGLE SPEED INDOOR FAN OPTION - HORIZONTAL

UNIT SIZE	NOM. V-Ph-Hz	IFM TYPE	ELEC. HTR			NO C.O. or UNPWR C.O.							
						No P.E.				w/ P.E. (pwrd fr/unit)			
			CRHEATER***A00	Nom (kW)	FLA	MCA	Fuse or HACR Brkr	Disc. Size FLA	Disc. Size LRA	MCA	Fuse or HACR Brkr	Disc. Size FLA	Disc. Size LRA
50TCQ*17	208/230-3-60	STD	NONE	-	-	71.4	90	75	423	83.2	100	88	443
			270A00	18.8/25.0	52.1/60.1	136.5/146.5	150/150	135/144	475/483	148.3/158.3	150/175	148/158	495/503
			271A00	37.6/50.0	104.2/120.3	201.6/191.7	225/200	195/213	527/543	213.4/203.5	225/225	208/227	547/563
			272A00	56.3/75.0	156.4/180.4	227.8/251.8	250/300	255/282	579/603	239.6/263.6	250/300	268/296	599/623
		MED	NONE	-	-	71.4	90	75	423	83.2	100	88	443
			270A00	18.8/25.0	52.1/60.1	136.5/146.5	150/150	135/144	475/483	148.3/158.3	150/175	148/158	495/503
			271A00	37.6/50.0	104.2/120.3	201.6/191.7	225/200	195/213	527/543	213.4/203.5	225/225	208/227	547/563
			272A00	56.3/75.0	156.4/180.4	227.8/251.8	250/300	255/282	579/603	239.6/263.6	250/300	268/296	599/623
		HIGH	NONE	-	-	74.4/73.5	90/90	78/77	425	86.2/85.3	100/100	92/91	445
			270A00	18.8/25.0	52.1/60.1	139.5/148.6	150/150	138/146	477/485	151.3/160.4	175/175	152/160	497/505
			271A00	37.6/50.0	104.2/120.3	204.6/193.8	225/225	198/216	529/545	216.4/205.6	225/225	212/229	549/565
			272A00	56.3/75.0	156.4/180.4	230.8/253.9	250/300	258/285	581/605	242.6/265.7	250/300	272/298	601/625
	460-3-60	STD	NONE	-	-	35.5	45	37	249	41.7	50	44	261
			273A00	25.0	30.1	73.1	80	72	279	79.3	80	79	291
			274A00	50.0	60.1	95.6	100	106	309	101.8	110	114	321
			275A00	75.0	90.2	125.7	150	141	339	131.9	150	148	351
		MED	NONE	-	-	35.5	45	37	249	41.7	50	44	261
			273A00	25.0	30.1	73.1	80	72	279	79.3	80	79	291
			274A00	50.0	60.1	95.6	100	106	309	101.8	110	114	321
			275A00	75.0	90.2	125.7	150	141	339	131.9	150	148	351
		HIGH	NONE	-	-	36.6	45	39	250	42.8	50	46	262
			273A00	25.0	30.1	74.2	80	73	280	80.4	90	80	292
			274A00	50.0	60.1	96.7	100	108	310	102.9	110	115	322
			275A00	75.0	90.2	126.8	150	142	340	133.0	150	149	352
	575-3-60	STD	NONE	-	-	24.9	30	26	184	29.7	35	32	192
			276A00	24.8	23.9	54.7	60	53	208	59.5	60	59	216
			277A00	49.6	47.7	84.5	90	81	232	89.3	90	86	240
			278A00	74.4	71.6	96.5	100	108	256	101.3	110	114	264
		MED	NONE	-	-	24.9	30	26	184	29.7	35	32	192
			276A00	24.8	23.9	54.7	60	53	208	59.5	60	59	216
			277A00	49.6	47.7	84.5	90	81	232	89.3	90	86	240
			278A00	74.4	71.6	96.5	100	108	256	101.3	110	114	264
		HIGH	NONE	-	-	27.7	30	29	198	32.5	40	35	206
			276A00	24.8	23.9	57.5	60	57	222	62.3	70	62	230
			277A00	49.6	47.7	87.3	90	84	246	92.1	100	90	254
			278A00	74.4	71.6	99.3	110	112	270	104.1	110	117	278

See Legend and Notes on page 29.

Electrical data (cont)

UNIT WIRE/FUSE OR HACR BREAKER SIZING DATA WITH FACTORY-INSTALLED SINGLE SPEED INDOOR FAN OPTION - HORIZONTAL (cont)

UNIT SIZE	NOM. V-Ph-Hz	IFM TYPE	ELEC. HTR			w/ PWRD C.O.							
						NO P.E.				w/ P.E. (pwrd fr/unit)			
							Fuse or HACR Brkr	Disc. Size			Fuse or HACR Brkr	Disc. Size	
			CRHEATER***A00	Nom (kW)	FLA	MCA		FLA	LRA	MCA		FLA	LRA
50TCQ*17	208/230-3-60	STD	NONE	-	-	76.2	100	80	428	88.0	100	94	448
			270A00	18.8/25.0	52.1/60.1	141.3/151.3	150/175	140/150	480/488	153.1/163.1	175/175	154/163	500/508
			271A00	37.6/50.0	104.2/120.3	206.4/196.5	225/225	200/219	532/548	218.2/208.3	225/225	214/232	552/568
			272A00	56.3/75.0	156.4/180.4	232.6/256.6	250/300	260/288	584/608	244.4/268.4	300/300	274/301	604/628
		MED	NONE	-	-	76.2	100	80	428	88.0	100	94	448
			270A00	18.8/25.0	52.1/60.1	141.3/151.3	150/175	140/150	480/488	153.1/163.1	175/175	154/163	500/508
			271A00	37.6/50.0	104.2/120.3	206.4/196.5	225/225	200/219	532/548	218.2/208.3	225/225	214/232	552/568
			272A00	56.3/75.0	156.4/180.4	232.6/256.6	250/300	260/288	584/608	244.4/268.4	300/300	274/301	604/628
		HIGH	NONE	-	-	79.2/78.3	100/100	84/83	430	91.0/90.1	100/100	97/96	450
			270A00	18.8/25.0	52.1/60.1	144.3/153.4	150/175	144/152	482/490	156.1/165.2	175/175	157/165	502/510
			271A00	37.6/50.0	104.2/120.3	209.4/198.6	225/225	204/221	534/550	221.2/210.4	225/225	217/235	554/570
			272A00	56.3/75.0	156.4/180.4	235.6/258.7	250/300	264/290	586/610	247.4/270.5	300/300	277/304	606/630
	460-3-60	STD	NONE	-	-	37.7	45	40	251	43.9	50	47	263
			273A00	25.0	30.1	75.3	80	74	281	81.5	90	82	293
			274A00	50.0	60.1	97.8	110	109	311	104.0	110	116	323
			275A00	75.0	90.2	127.9	150	144	341	134.1	150	151	353
		MED	NONE	-	-	37.7	45	40	251	43.9	50	47	263
			273A00	25.0	30.1	75.3	80	74	281	81.5	90	82	293
			274A00	50.0	60.1	97.8	110	109	311	104.0	110	116	323
			275A00	75.0	90.2	127.9	150	144	341	134.1	150	151	353
		HIGH	NONE	-	-	38.8	50	41	252	45.0	50	48	264
			273A00	25.0	30.1	76.4	80	76	282	82.6	90	83	294
			274A00	50.0	60.1	98.9	110	110	312	105.1	110	117	324
			275A00	75.0	90.2	129.0	150	145	342	135.2	150	152	354
	575-3-60	STD	NONE	-	-	26.6	30	28	186	31.4	40	33	194
			276A00	24.8	23.9	56.4	60	55	210	61.2	70	61	218
			277A00	49.6	47.7	86.2	90	83	234	91.0	100	88	242
			278A00	74.4	71.6	98.2	110	110	258	103.0	110	116	266
		MED	NONE	-	-	26.6	30	28	186	31.4	40	33	194
			276A00	24.8	23.9	56.4	60	55	210	61.2	70	61	218
			277A00	49.6	47.7	86.2	90	83	234	91.0	100	88	242
			278A00	74.4	71.6	98.2	110	110	258	103.0	110	116	266
		HIGH	NONE	-	-	29.4	35	31	200	34.2	40	37	208
			276A00	24.8	23.9	59.2	60	59	224	64.0	70	64	232
			277A00	49.6	47.7	89.0	90	86	248	93.8	100	92	256
			278A00	74.4	71.6	101.0	110	114	272	105.8	110	119	280

See Legend and Notes on page 29.

UNIT WIRE/FUSE OR HACR BREAKER SIZING DATA WITH FACTORY-INSTALLED SINGLE SPEED INDOOR FAN OPTION - HORIZONTAL (cont)

UNIT SIZE	NOM. V-Ph-Hz	IFM TYPE	ELEC. HTR			NO C.O. or UNPWR C.O.							
						No P.E.				w/ P.E. (pwrd fr/unit)			
			CRHEATER***A00	Nom (kW)	FLA	MCA	Fuse or HACR Brkr	Disc. Size FLA	Disc. Size LRA	MCA	Fuse or HACR Brkr	Disc. Size FLA	Disc. Size LRA
50TCQ*24	208/230-3-60	STD	NONE	-	-	94.8	125	99	560	106.6	125	113	580
			270A00	18.8/25.0	52.1/60.1	160.0/170.0	175/175	159/169	612/620	171.8/181.8	175/200	173/182	632/640
			271A00	37.6/50.0	104.2/120.3	225.1/215.1	250/225	219/238	664/680	236.9/226.9	250/250	233/251	684/700
			272A00	56.3/75.0	156.4/180.4	251.2/275.2	300/300	279/307	716/740	263.0/287.0	300/300	293/321	736/760
		MED-High Efficiency	NONE	-	-	94.8	125	99	560	106.6	125	113	580
			270A00	18.8/25.0	52.1/60.1	160.0/170.0	175/175	159/169	612/620	171.8/181.8	175/200	173/182	632/640
			271A00	37.6/50.0	104.2/120.3	225.1/215.1	250/225	219/238	664/680	236.9/226.9	250/250	233/251	684/700
			272A00	56.3/75.0	156.4/180.4	251.2/275.2	300/300	279/307	716/740	263.0/287.0	300/300	293/321	736/760
		HIGH-High Efficiency	NONE	-	-	106.2	125	113	639	118.0	150	126	659
			270A00	18.8/25.0	52.1/60.1	171.4/181.4	175/200	173/182	691/699	183.2/193.2	200/200	186/195	711/719
			271A00	37.6/50.0	104.2/120.3	236.5/226.5	250/250	232/251	743/759	248.3/238.3	250/250	246/265	763/779
			272A00	56.3/75.0	156.4/180.4	262.6/286.6	300/300	292/320	795/819	274.4/298.4	300/350	306/334	815/839
	460-3-60	STD	NONE	-	-	51.3	60	54	289	57.5	70	61	301
			273A00	25.0	30.1	88.9	90	88	319	95.1	100	96	331
			274A00	50.0	60.1	111.4	125	123	349	117.6	125	130	361
			275A00	75.0	90.2	141.5	150	158	379	147.7	175	165	391
		MED-High Efficiency	NONE	-	-	51.3	60	54	289	57.5	70	61	301
			273A00	25.0	30.1	88.9	90	88	319	95.1	100	96	331
			274A00	50.0	60.1	111.4	125	123	349	117.6	125	130	361
			275A00	75.0	90.2	141.5	150	158	379	147.7	175	165	391
		HIGH-High Efficiency	NONE	-	-	57.0	70	60	329	63.2	80	68	341
			273A00	25.0	30.1	94.6	100	95	359	100.8	110	102	371
			274A00	50.0	60.1	117.1	125	129	389	123.3	150	137	401
			275A00	75.0	90.2	147.2	175	164	419	153.4	175	171	431
	575-3-60	STD	NONE	-	-	36.2	45	38	204	41.0	50	43	212
			276A00	24.8	23.9	66.1	70	65	228	70.9	80	71	236
			277A00	49.6	47.7	95.8	100	93	252	100.6	110	98	260
			278A00	74.4	71.6	107.8	125	120	276	112.6	125	126	284
		MED-High Efficiency	NONE	-	-	38.2	50	40	202	43.0	50	46	210
			276A00	24.8	23.9	68.1	70	68	226	72.9	80	73	234
			277A00	49.6	47.7	97.8	100	95	250	102.6	110	101	258
			278A00	74.4	71.6	109.8	125	123	274	114.6	125	128	282
		HIGH-High Efficiency	NONE	-	-	40.1	50	42	229	44.9	50	48	237
			276A00	24.8	23.9	70.0	70	70	253	74.8	80	75	261
			277A00	49.6	47.7	99.7	100	97	277	104.5	110	103	285
			278A00	74.4	71.6	111.7	125	125	301	116.5	125	130	309

See Legend and Notes on page 29.

UNIT WIRE/FUSE OR HACR BREAKER SIZING DATA WITH FACTORY-INSTALLED SINGLE SPEED INDOOR FAN OPTION - HORIZONTAL (cont)

UNIT SIZE	NOM. V-Ph-Hz	IFM TYPE	ELEC. HTR			w/ PWRD C.O.							
						NO P.E.				w/ P.E. (pwrd fr/unit)			
							Fuse or HACR Brkr	Disc. Size			Fuse or HACR Brkr	Disc. Size	
			CRHEATER***A00	Nom (kW)	FLA	MCA		FLA	LRA	MCA		FLA	LRA
50TCQ*24	208/230-3-60	STD	NONE	-	-	99.6	125	105	565	111.4	125	119	585
			270A00	18.8/25.0	52.1/60.1	164.8/174.8	175/175	165/174	617/625	176.6/186.6	200/200	178/188	637/645
			271A00	37.6/50.0	104.2/120.3	229.9/219.9	250/250	225/243	669/685	241.7/231.7	250/250	238/257	689/705
			272A00	56.3/75.0	156.4/180.4	256.0/280.0	300/300	285/312	721/745	267.8/291.8	300/350	298/326	741/765
		MED-High Efficiency	NONE	-	-	99.6	125	105	565	111.4	125	119	585
			270A00	18.8/25.0	52.1/60.1	164.8/174.8	175/175	165/174	617/625	176.6/186.6	200/200	178/188	637/645
			271A00	37.6/50.0	104.2/120.3	229.9/219.9	250/250	225/243	669/685	241.7/231.7	250/250	238/257	689/705
			272A00	56.3/75.0	156.4/180.4	256.0/280.0	300/300	285/312	721/745	267.8/291.8	300/350	298/326	741/765
		HIGH-High Efficiency	NONE	-	-	111.0	125	118	644	122.8	150	132	664
			270A00	18.8/25.0	52.1/60.1	176.2/186.2	200/200	178/187	696/704	188.0/198.0	200/200	192/201	716/724
			271A00	37.6/50.0	104.2/120.3	241.3/231.3	250/250	238/256	748/764	253.1/243.1	300/300	252/270	768/784
			272A00	56.3/75.0	156.4/180.4	267.4/291.4	300/300	298/326	800/824	279.2/303.2	300/350	312/339	820/844
	460-3-60	STD	NONE	-	-	53.5	60	56	291	59.7	70	63	303
			273A00	25.0	30.1	91.1	100	91	321	97.3	100	98	333
			274A00	50.0	60.1	113.6	125	125	351	119.8	125	133	363
			275A00	75.0	90.2	143.7	150	160	381	149.9	175	167	393
		MED-High Efficiency	NONE	-	-	53.5	60	56	291	59.7	70	63	303
			273A00	25.0	30.1	91.1	100	91	321	97.3	100	98	333
			274A00	50.0	60.1	113.6	125	125	351	119.8	125	133	363
			275A00	75.0	90.2	143.7	150	160	381	149.9	175	167	393
		HIGH-High Efficiency	NONE	-	-	59.2	70	63	331	65.4	80	70	343
			273A00	25.0	30.1	96.8	100	98	361	103.0	110	105	373
			274A00	50.0	60.1	119.3	125	132	391	125.5	150	139	403
			275A00	75.0	90.2	149.4	175	167	421	155.6	175	174	433
	575-3-60	STD	NONE	-	-	37.9	50	40	206	42.7	50	45	214
			276A00	24.8	23.9	67.8	70	67	230	72.6	80	73	238
			277A00	49.6	47.7	97.5	100	95	254	102.3	110	100	262
			278A00	74.4	71.6	109.5	125	122	278	114.3	125	128	286
		MED-High Efficiency	NONE	-	-	39.9	50	42	204	44.7	50	48	212
			276A00	24.8	23.9	69.8	70	70	228	74.6	80	75	236
			277A00	49.6	47.7	99.5	100	97	252	104.3	110	103	260
			278A00	74.4	71.6	111.5	125	125	276	116.3	125	130	284
		HIGH-High Efficiency	NONE	-	-	41.8	50	44	231	46.6	50	50	239
			276A00	24.8	23.9	71.7	80	72	255	76.5	80	77	263
			277A00	49.6	47.7	101.4	110	99	279	106.2	110	105	287
			278A00	74.4	71.6	113.4	125	127	303	118.2	125	132	311

See Legend and Notes on page 29.

UNIT WIRE/FUSE OR HACR BREAKER SIZING DATA
WITH FACTORY-INSTALLED SINGLE SPEED INDOOR FAN OPTION - VERTICAL

UNIT SIZE	NOM. V-Ph-Hz	IFM TYPE	ELEC. HTR			NO C.O. or UNPWR C.O.							
						No P.E.				w/ P.E. (pwrd fr/unit)			
			CRHEATER***A00	Nom (kW)	FLA	MCA	Fuse or HACR Brkr	Disc. Size FLA	Disc. Size LRA	MCA	Fuse or HACR Brkr	Disc. Size FLA	Disc. Size LRA
50TCQ*17	208/230-3-60	STD	NONE	-	-	68.3	90	71	393	80.1	100	85	413
			279A00	18.8/25.0	52.1/60.1	133.4/143.4	150/150	131/140	445/453	145.2/155.2	150/175	145/154	465/473
			280A00	37.6/50.0	104.2/120.3	198.5/188.6	200/200	191/210	497/513	210.3/200.4	225/225	205/223	517/533
			281A00	56.3/75.0	156.4/180.4	224.7/248.7	250/300	251/279	549/573	236.5/260.5	250/300	265/292	569/593
		MED	NONE	-	-	71.4	90	75	423	83.2	100	88	443
			279A00	18.8/25.0	52.1/60.1	136.5/146.5	150/150	135/144	475/483	148.3/158.3	150/175	148/158	495/503
			280A00	37.6/50.0	104.2/120.3	201.6/191.7	225/200	195/213	527/543	213.4/203.5	225/225	208/227	547/563
			281A00	56.3/75.0	156.4/180.4	227.8/251.8	250/300	255/282	579/603	239.6/263.6	250/300	268/296	599/623
		HIGH	NONE	-	-	74.4/73.5	90/90	78/77	425	86.2/85.3	100/100	92/91	445
			279A00	18.8/25.0	52.1/60.1	139.5/148.6	150/150	138/146	477/485	151.3/160.4	175/175	152/160	497/505
			280A00	37.6/50.0	104.2/120.3	204.6/193.8	225/225	198/216	529/545	216.4/205.6	225/225	212/229	549/565
			281A00	56.3/75.0	156.4/180.4	230.8/253.9	250/300	258/285	581/605	242.6/265.7	250/300	272/298	601/625
	460-3-60	STD	NONE	-	-	33.6	45	35	234	39.8	50	42	246
			282A00	25.0	30.1	71.2	80	70	264	77.4	80	77	276
			283A00	50.0	60.1	93.7	100	104	294	99.9	110	111	306
			284A00	75.0	90.2	123.8	150	139	324	130.0	150	146	336
		MED	NONE	-	-	35.5	45	37	249	41.7	50	44	261
			282A00	25.0	30.1	73.1	80	72	279	79.3	80	79	291
			283A00	50.0	60.1	95.6	100	106	309	101.8	110	114	321
			284A00	75.0	90.2	125.7	150	141	339	131.9	150	148	351
		HIGH	NONE	-	-	36.6	45	39	250	42.8	50	46	262
			282A00	25.0	30.1	74.2	80	73	280	80.4	90	80	292
			283A00	50.0	60.1	96.7	100	108	310	102.9	110	115	322
			284A00	75.0	90.2	126.8	150	142	340	133.0	150	149	352
	575-3-60	STD	NONE	-	-	24.9	30	26	184	29.7	35	32	192
			285A00	24.8	23.9	54.7	60	53	208	59.5	60	59	216
			286A00	49.6	47.7	84.5	90	81	232	89.3	90	86	240
			287A00	74.4	71.6	96.5	100	108	256	101.3	110	114	264
		MED	NONE	-	-	24.9	30	26	184	29.7	35	32	192
			285A00	24.8	23.9	54.7	60	53	208	59.5	60	59	216
			286A00	49.6	47.7	84.5	90	81	232	89.3	90	86	240
			287A00	74.4	71.6	96.5	100	108	256	101.3	110	114	264
		HIGH	NONE	-	-	27.7	30	29	198	32.5	40	35	206
			285A00	24.8	23.9	57.5	60	57	222	62.3	70	62	230
			286A00	49.6	47.7	87.3	90	84	246	92.1	100	90	254
			287A00	74.4	71.6	99.3	110	112	270	104.1	110	117	278

See Legend and Notes on page 29.

UNIT WIRE/FUSE OR HACR BREAKER SIZING DATA WITH FACTORY-INSTALLED SINGLE SPEED INDOOR FAN OPTION - VERTICAL (cont)

UNIT SIZE	NOM. V-Ph-Hz	IFM TYPE	ELEC. HTR			w/ PWRD C.O.							
						NO P.E.				w/ P.E. (pwrd fr/unit)			
							Fuse or HACR Brkr	Disc. Size			Fuse or HACR Brkr	Disc. Size	
			CRHEATER***A00	Nom (kW)	FLA	MCA		FLA	LRA	MCA		FLA	LRA
50TCQ*17	208/230-3-60	STD	NONE	-	-	73.1	90	77	398	84.9	100	90	418
			279A00	18.8/25.0	52.1/60.1	138.2/148.2	150/150	137/146	450/458	150.0/160.0	150/175	150/160	470/478
			280A00	37.6/50.0	104.2/120.3	203.3/193.4	225/200	197/215	502/518	215.1/205.2	225/225	210/229	522/538
			281A00	56.3/75.0	156.4/180.4	229.5/253.5	250/300	257/284	554/578	241.3/265.3	250/300	270/298	574/598
		MED	NONE	-	-	76.2	100	80	428	88.0	100	94	448
			279A00	18.8/25.0	52.1/60.1	141.3/151.3	150/175	140/150	480/488	153.1/163.1	175/175	154/163	500/508
			280A00	37.6/50.0	104.2/120.3	206.4/196.5	225/225	200/219	532/548	218.2/208.3	225/225	214/232	552/568
			281A00	56.3/75.0	156.4/180.4	232.6/256.6	250/300	260/288	584/608	244.4/268.4	300/300	274/301	604/628
		HIGH	NONE	-	-	79.2/78.3	100/100	84/83	430	91.0/90.1	100/100	97/96	450
			279A00	18.8/25.0	52.1/60.1	144.3/153.4	150/175	144/152	482/490	156.1/165.2	175/175	157/165	502/510
			280A00	37.6/50.0	104.2/120.3	209.4/198.6	225/225	204/221	534/550	221.2/210.4	225/225	217/235	554/570
			281A00	56.3/75.0	156.4/180.4	235.6/258.7	250/300	264/290	586/610	247.4/270.5	300/300	277/304	606/630
	460-3-60	STD	NONE	-	-	35.8	45	38	236	42.0	50	45	248
			282A00	25.0	30.1	73.4	80	72	266	79.6	80	79	278
			283A00	50.0	60.1	95.9	100	107	296	102.1	110	114	308
			284A00	75.0	90.2	126.0	150	141	326	132.2	150	148	338
		MED	NONE	-	-	37.7	45	40	251	43.9	50	47	263
			282A00	25.0	30.1	75.3	80	74	281	81.5	90	82	293
			283A00	50.0	60.1	97.8	110	109	311	104.0	110	116	323
			284A00	75.0	90.2	127.9	150	144	341	134.1	150	151	353
		HIGH	NONE	-	-	38.8	50	41	252	45.0	50	48	264
			282A00	25.0	30.1	76.4	80	76	282	82.6	90	83	294
			283A00	50.0	60.1	98.9	110	110	312	105.1	110	117	324
			284A00	75.0	90.2	129.0	150	145	342	135.2	150	152	354
	575-3-60	STD	NONE	-	-	26.6	30	28	186	31.4	40	33	194
			285A00	24.8	23.9	56.4	60	55	210	61.2	70	61	218
			286A00	49.6	47.7	86.2	90	83	234	91.0	100	88	242
			287A00	74.4	71.6	98.2	110	110	258	103.0	110	116	266
		MED	NONE	-	-	26.6	30	28	186	31.4	40	33	194
			285A00	24.8	23.9	56.4	60	55	210	61.2	70	61	218
			286A00	49.6	47.7	86.2	90	83	234	91.0	100	88	242
			287A00	74.4	71.6	98.2	110	110	258	103.0	110	116	266
		HIGH	NONE	-	-	29.4	35	31	200	34.2	40	37	208
			285A00	24.8	23.9	59.2	60	59	224	64.0	70	64	232
			286A00	49.6	47.7	89.0	90	86	248	93.8	100	92	256
			287A00	74.4	71.6	101.0	110	114	272	105.8	110	119	280

See Legend and Notes on page 29.

UNIT WIRE/FUSE OR HACR BREAKER SIZING DATA
WITH FACTORY-INSTALLED SINGLE SPEED INDOOR FAN OPTION - VERTICAL (cont)

UNIT SIZE	NOM. V-Ph-Hz	IFM TYPE	ELEC. HTR			NO C.O. or UNPWR C.O.							
						No P.E.				w/ P.E. (pwrd fr/unit)			
							Fuse or HACR Brkr	Disc. Size			Fuse or HACR Brkr	Disc. Size	
			CRHEATER***A00	Nom (kW)	FLA	MCA		FLA	LRA	MCA		FLA	LRA
50TCQ*24	208/230-3-60	STD	NONE	-	-	91.3/90.4	100/100	95/94	564	103.1/102.2	125/125	109/108	584
			279A00	18.8/25.0	52.1/60.1	156.5/165.6	175/175	155/164	616/624	168.3/177.4	175/200	169/177	636/644
			280A00	37.6/50.0	104.2/120.3	221.6/210.7	225/225	215/233	668/684	233.4/222.5	250/250	229/246	688/704
			281A00	56.3/75.0	156.4/180.4	247.7/270.8	300/300	275/302	720/744	259.5/282.6	300/300	289/315	740/764
		MED-High Efficiency	NONE	-	-	94.8	125	99	560	106.6	125	113	580
			279A00	18.8/25.0	52.1/60.1	160.0/170.0	175/175	159/169	612/620	171.8/181.8	175/200	173/182	632/640
			280A00	37.6/50.0	104.2/120.3	225.1/215.1	250/225	219/238	664/680	236.9/226.9	250/250	233/251	684/700
			281A00	56.3/75.0	156.4/180.4	251.2/275.2	300/300	279/307	716/740	263.0/287.0	300/300	293/321	736/760
		HIGH-High Efficiency	NONE	-	-	106.2	125	113	639	118.0	150	126	659
			279A00	18.8/25.0	52.1/60.1	171.4/181.4	175/200	173/182	691/699	183.2/193.2	200/200	186/195	711/719
			280A00	37.6/50.0	104.2/120.3	236.5/226.5	250/250	232/251	743/759	248.3/238.3	250/250	246/265	763/779
			281A00	56.3/75.0	156.4/180.4	262.6/286.6	300/300	292/320	795/819	274.4/298.4	300/350	306/334	815/839
	460-3-60	STD	NONE	-	-	49.1	60	51	291	55.3	60	58	303
			282A00	25.0	30.1	86.7	90	86	321	92.9	100	93	333
			283A00	50.0	60.1	109.2	125	120	351	115.4	125	128	363
			284A00	75.0	90.2	139.3	150	155	381	145.5	150	162	393
		MED-High Efficiency	NONE	-	-	51.3	60	54	289	57.5	70	61	301
			282A00	25.0	30.1	88.9	90	88	319	95.1	100	96	331
			283A00	50.0	60.1	111.4	125	123	349	117.6	125	130	361
			284A00	75.0	90.2	141.5	150	158	379	147.7	175	165	391
		HIGH-High Efficiency	NONE	-	-	57.0	70	60	329	63.2	80	68	341
			282A00	25.0	30.1	94.6	100	95	359	100.8	110	102	371
			283A00	50.0	60.1	117.1	125	129	389	123.3	150	137	401
			284A00	75.0	90.2	147.2	175	164	419	153.4	175	171	431
	575-3-60	STD	NONE	-	-	36.2	45	38	204	41.0	50	43	212
			285A00	24.8	23.9	66.1	70	65	228	70.9	80	71	236
			286A00	49.6	47.7	95.8	100	93	252	100.6	110	98	260
			287A00	74.4	71.6	107.8	125	120	276	112.6	125	126	284
		MED-High Efficiency	NONE	-	-	38.2	50	40	202	43.0	50	46	210
			285A00	24.8	23.9	68.1	70	68	226	72.9	80	73	234
			286A00	49.6	47.7	97.8	100	95	250	102.6	110	101	258
			287A00	74.4	71.6	109.8	125	123	274	114.6	125	128	282
		HIGH-High Efficiency	NONE	-	-	40.1	50	42	229	44.9	50	48	237
			285A00	24.8	23.9	70.0	70	70	253	74.8	80	75	261
			286A00	49.6	47.7	99.7	100	97	277	104.5	110	103	285
			287A00	74.4	71.6	111.7	125	125	301	116.5	125	130	309

See Legend and Notes on page 29.

UNIT WIRE/FUSE OR HACR BREAKER SIZING DATA WITH FACTORY-INSTALLED SINGLE SPEED INDOOR FAN OPTION - VERTICAL (cont)

UNIT SIZE	NOM. V-Ph-Hz	IFM TYPE	ELEC. HTR			w/ PWRD C.O.							
						NO P.E.				w/ P.E. (pwrd fr/unit)			
							Fuse or HACR Brkr	Disc. Size			Fuse or HACR Brkr	Disc. Size	
			CRHEATER***A00	Nom (kW)	FLA	MCA		FLA	LRA	MCA		FLA	LRA
50TCQ*24	208/230-3-60	STD	NONE	-	-	96.1/95.2	125/125	101/100	569	107.9/107.0	125/125	115/114	589
			279A00	18.8/25.0	52.1/60.1	161.3/170.4	175/175	161/169	621/629	173.1/182.2	175/200	174/183	641/649
			280A00	37.6/50.0	104.2/120.3	226.4/215.5	250/225	221/238	673/689	238.2/227.3	250/250	234/252	693/709
			281A00	56.3/75.0	156.4/180.4	252.5/275.6	300/300	281/307	725/749	264.3/287.4	300/300	294/321	745/769
		MED-High Efficiency	NONE	-	-	99.6	125	105	565	111.4	125	119	585
			279A00	18.8/25.0	52.1/60.1	164.8/174.8	175/175	165/174	617/625	176.6/186.6	200/200	178/188	637/645
			280A00	37.6/50.0	104.2/120.3	229.9/219.9	250/250	225/243	669/685	241.7/231.7	250/250	238/257	689/705
			281A00	56.3/75.0	156.4/180.4	256.0/280.0	300/300	285/312	721/745	267.8/291.8	300/350	298/326	741/765
		HIGH-High Efficiency	NONE	-	-	111.0	125	118	644	122.8	150	132	664
			279A00	18.8/25.0	52.1/60.1	176.2/186.2	200/200	178/187	696/704	188.0/198.0	200/200	192/201	716/724
			280A00	37.6/50.0	104.2/120.3	241.3/231.3	250/250	238/256	748/764	253.1/243.1	300/300	252/270	768/784
			281A00	56.3/75.0	156.4/180.4	267.4/291.4	300/300	298/326	800/824	279.2/303.2	300/350	312/339	820/844
	460-3-60	STD	NONE	-	-	51.3	60	54	293	57.5	70	61	305
			282A00	25.0	30.1	88.9	90	88	323	95.1	100	96	335
			283A00	50.0	60.1	111.4	125	123	353	117.6	125	130	365
			284A00	75.0	90.2	141.5	150	158	383	147.7	175	165	395
		MED-High Efficiency	NONE	-	-	53.5	60	56	291	59.7	70	63	303
			282A00	25.0	30.1	91.1	100	91	321	97.3	100	98	333
			283A00	50.0	60.1	113.6	125	125	351	119.8	125	133	363
			284A00	75.0	90.2	143.7	150	160	381	149.9	175	167	393
		HIGH-High Efficiency	NONE	-	-	59.2	70	63	331	65.4	80	70	343
			282A00	25.0	30.1	96.8	100	98	361	103.0	110	105	373
			283A00	50.0	60.1	119.3	125	132	391	125.5	150	139	403
			284A00	75.0	90.2	149.4	175	167	421	155.6	175	174	433
	575-3-60	STD	NONE	-	-	37.9	50	40	206	42.7	50	45	214
			285A00	24.8	23.9	67.8	70	67	230	72.6	80	73	238
			286A00	49.6	47.7	97.5	100	95	254	102.3	110	100	262
			287A00	74.4	71.6	109.5	125	122	278	114.3	125	128	286
		MED-High Efficiency	NONE	-	-	39.9	50	42	204	44.7	50	48	212
			285A00	24.8	23.9	69.8	70	70	228	74.6	80	75	236
			286A00	49.6	47.7	99.5	100	97	252	104.3	110	103	260
			287A00	74.4	71.6	111.5	125	125	276	116.3	125	130	284
		HIGH-High Efficiency	NONE	-	-	41.8	50	44	231	46.6	50	50	239
			285A00	24.8	23.9	71.7	80	72	255	76.5	80	77	263
			286A00	49.6	47.7	101.4	110	99	279	106.2	110	105	287
			287A00	74.4	71.6	113.4	125	127	303	118.2	125	132	311

See Legend and Notes on page 29.

UNIT WIRE/FUSE OR HACR BREAKER SIZING DATA WITH FACTORY-INSTALLED 2-SPEED INDOOR FAN OPTION

UNIT SIZE	NOM. V-Ph-Hz	IFM TYPE	ELEC. HTR			NO C.O. or UNPWR C.O.							
						No P.E.				w/ P.E. (pwrd fr/unit)			
			CRHEATER***A00 VERT/HORZ	Nom (kW)	FLA	MCA	Fuse or HACR Brkr	Disc. Size FLA	Disc. Size LRA	MCA	Fuse or HACR Brkr	Disc. Size FLA	Disc. Size LRA
50TCQ*17	208/230-3-60	STD	NONE	—	—	69.4/68.6	90/90	73/72	390	81.2/80.4	100/100	86/85	410
			279/270A00	18.8/25.0	52.1/60.1	134.5/143.7	150/150	132/141	442/450	146.3/155.5	150/175	146/154	462/470
			280/271A00	37.6/50.0	104.2/120.3	199.6/188.9	200/200	192/210	494/510	211.4/200.7	225/225	206/224	514/530
			281/272A00	56.3/75.0	156.4/180.4	225.8/249.0	250/300	252/279	546/570	237.6/260.8	250/300	266/293	566/590
		MED	NONE	—	—	71.6/70.6	90/90	75/74	414	83.4/82.4	100/100	89/88	434
			279/270A00	18.8/25.0	52.1/60.1	136.7/145.7	150/150	135/143	466/474	148.5/157.5	150/175	149/157	486/494
			280/271A00	37.6/50.0	104.2/120.3	201.8/190.9	225/200	195/212	518/534	213.6/202.7	225/225	208/226	538/554
			281/272A00	56.3/75.0	156.4/180.4	228.0/251.0	250/300	255/281	570/594	239.8/262.8	250/300	269/295	590/614
		HIGH	NONE	—	—	74.4/73.5	90/90	78/77	425	86.2/85.3	100/100	92/91	445
			279/270A00	18.8/25.0	52.1/60.1	139.5/148.6	150/150	138/146	477/485	151.3/160.4	175/175	152/160	497/505
			280/271A00	37.6/50.0	104.2/120.3	204.6/193.8	225/225	198/216	529/545	216.4/205.6	225/225	212/229	549/565
			281/272A00	56.3/75.0	156.4/180.4	230.8/253.9	250/300	258/285	581/605	242.6/265.7	250/300	272/298	601/625
	460-3-60	STD	NONE	—	—	34.0	45	36	233	40.2	50	43	245
			282/273A00	25.0	30.1	71.6	80	70	263	77.8	80	77	275
			283/274A00	50.0	60.1	94.1	100	105	293	100.3	110	112	305
			284/275A00	75.0	90.2	124.2	150	139	323	130.4	150	146	335
		MED	NONE	—	—	35.1	45	37	245	41.3	50	44	257
			282/273A00	25.0	30.1	72.7	80	71	275	78.9	80	79	287
			283/274A00	50.0	60.1	95.2	100	106	305	101.4	110	113	317
			284/275A00	75.0	90.2	125.3	150	141	335	131.5	150	148	347
		HIGH	NONE	—	—	36.6	45	39	250	42.8	50	46	262
			282/273A00	25.0	30.1	74.2	80	73	280	80.4	90	80	292
			283/274A00	50.0	60.1	96.7	100	108	310	102.9	110	115	322
			284/275A00	75.0	90.2	126.8	150	142	340	133.0	150	149	352
	575-3-60	STD	NONE	—	—	26.6	30	28	184	31.4	40	33	192
			285/276A00	24.8	23.9	56.4	60	55	208	61.2	70	61	216
			286/277A00	49.6	47.7	86.2	90	83	232	91.0	100	88	240
			287/278A00	74.4	71.6	98.2	110	110	256	103.0	110	116	264
		MED	NONE	—	—	26.6	30	28	184	31.4	40	33	192
			285/276A00	24.8	23.9	56.4	60	55	208	61.2	70	61	216
			286/277A00	49.6	47.7	86.2	90	83	232	91.0	100	88	240
			287/278A00	74.4	71.6	98.2	110	110	256	103.0	110	116	264
		HIGH	NONE	—	—	28.3	35	30	198	33.1	40	35	206
			285/276A00	24.8	23.9	58.1	60	57	222	62.9	70	63	230
			286/277A00	49.6	47.7	87.9	90	85	246	92.7	100	90	254
			287/278A00	74.4	71.6	99.9	110	112	270	104.7	110	118	278

See Legend and Notes on page 29.

UNIT WIRE/FUSE OR HACR BREAKER SIZING DATA WITH FACTORY-INSTALLED 2-SPEED INDOOR FAN OPTION (cont)

UNIT SIZE	NOM. V-Ph-Hz	IFM TYPE	ELEC. HTR			w/ PWRD C.O.							
						NO P.E.				w/ P.E. (pwrd fr/unit)			
			CRHEATER***A00 VERT/HORZ	Nom (kW)	FLA	MCA	Fuse or HACR Brkr	Disc. Size FLA	Disc. Size LRA	MCA	Fuse or HACR Brkr	Disc. Size FLA	Disc. Size LRA
50TCQ*17	208/230-3-60	STD	NONE	—	—	74.2/73.4	90/90	78/77	395	86.0/85.2	100/100	92/91	415
			279/270A00	18.8/25.0	52.1/60.1	139.3/148.5	150/150	138/146	447/455	151.1/160.3	175/175	152/160	467/475
			280/271A00	37.6/50.0	104.2/120.3	204.4/193.7	225/200	198/216	499/515	216.2/205.5	225/225	211/229	519/535
			281/272A00	56.3/75.0	156.4/180.4	230.6/253.8	250/300	258/285	551/575	242.4/265.6	250/300	272/298	571/595
		MED	NONE	—	—	76.4/75.4	100/100	81/79	419	88.2/87.2	100/100	94/93	439
			279/270A00	18.8/25.0	52.1/60.1	141.5/150.5	150/175	141/149	471/479	153.3/162.3	175/175	154/162	491/499
			280/271A00	37.6/50.0	104.2/120.3	206.6/195.7	225/225	200/218	523/539	218.4/207.5	225/225	214/231	543/559
			281/272A00	56.3/75.0	156.4/180.4	232.8/255.8	250/300	260/287	575/599	244.6/267.6	300/300	274/300	595/619
		HIGH	NONE	—	—	79.2/78.3	100/100	84/83	430	91.0/90.1	100/100	97/96	450
			279/270A00	18.8/25.0	52.1/60.1	144.3/153.4	150/175	144/152	482/490	156.1/165.2	175/175	157/165	502/510
			280/271A00	37.6/50.0	104.2/120.3	209.4/198.6	225/225	204/221	534/550	221.2/210.4	225/225	217/235	554/570
			281/272A00	56.3/75.0	156.4/180.4	235.6/258.7	250/300	264/290	586/610	247.4/270.5	300/300	277/304	606/630
	460-3-60	STD	NONE	—	—	36.2	45	38	235	42.4	50	45	247
			282/273A00	25.0	30.1	73.8	80	73	265	80.0	80	80	277
			283/274A00	50.0	60.1	96.3	100	107	295	102.5	110	114	307
			284/275A00	75.0	90.2	126.4	150	142	325	132.6	150	149	337
		MED	NONE	—	—	37.3	45	39	247	43.5	50	46	259
			282/273A00	25.0	30.1	74.9	80	74	277	81.1	90	81	289
			283/274A00	50.0	60.1	97.4	110	108	307	103.6	110	116	319
			284/275A00	75.0	90.2	127.5	150	143	337	133.7	150	150	349
		HIGH	NONE	—	—	38.8	50	41	252	45.0	50	48	264
			282/273A00	25.0	30.1	76.4	80	76	282	82.6	90	83	294
			283/274A00	50.0	60.1	98.9	110	110	312	105.1	110	117	324
			284/275A00	75.0	90.2	129.0	150	145	342	135.2	150	152	354
	575-3-60	STD	NONE	—	—	28.3	35	30	186	33.1	40	35	194
			285/276A00	24.8	23.9	58.1	60	57	210	62.9	70	63	218
			286/277A00	49.6	47.7	87.9	90	85	234	92.7	100	90	242
			287/278A00	74.4	71.6	99.9	110	112	258	104.7	110	118	266
		MED	NONE	—	—	28.3	35	30	186	33.1	40	35	194
			285/276A00	24.8	23.9	58.1	60	57	210	62.9	70	63	218
			286/277A00	49.6	47.7	87.9	90	85	234	92.7	100	90	242
			287/278A00	74.4	71.6	99.9	110	112	258	104.7	110	118	266
		HIGH	NONE	—	—	30.0	35	32	200	34.8	40	37	208
			285/276A00	24.8	23.9	59.8	60	59	224	64.6	70	65	232
			286/277A00	49.6	47.7	89.6	90	87	248	94.4	100	92	256
			287/278A00	74.4	71.6	101.6	110	114	272	106.4	110	120	280

See Legend and Notes on page 29.

UNIT WIRE/FUSE OR HACR BREAKER SIZING DATA WITH FACTORY-INSTALLED 2-SPEED INDOOR FAN OPTION (cont)

UNIT SIZE	NOM. V-Ph-Hz	IFM TYPE	ELEC. HTR			NO C.O. or UNPWR C.O.							
						No P.E.				w/ P.E. (pwrd fr/unit)			
			CRHEATER***A00 VERT/HORZ	Nom (kW)	FLA	MCA	Fuse or HACR Brkr	Disc. Size FLA	Disc. Size LRA	MCA	Fuse or HACR Brkr	Disc. Size FLA	Disc. Size LRA
50TCQ*24	208/230-3-60	STD	NONE	—	—	91.3/90.4	100/100	95/94	564	103.1/102.2	125/125	109/108	584
			279/---A00	18.8/25.0	52.1/60.1	156.5/165.6	175/175	155/164	616/624	168.3/177.4	175/200	169/177	636/644
			280/---A00	37.6/50.0	104.2/120.3	221.6/210.7	225/225	215/233	668/684	233.4/222.5	250/250	229/246	688/704
			281/---A00	56.3/75.0	156.4/180.4	247.7/270.8	300/300	275/302	720/744	259.5/282.6	300/300	289/315	740/764
		MED	NONE	—	—	94.8	125	99	560	106.6	125	113	580
			279/270A00	18.8/25.0	52.1/60.1	160.0/170.0	175/175	159/169	612/620	171.8/181.8	175/200	173/182	632/640
			280/271A00	37.6/50.0	104.2/120.3	225.1/215.1	250/225	219/238	664/680	236.9/226.9	250/250	233/251	684/700
			281/272A00	56.3/75.0	156.4/180.4	251.2/275.2	300/300	279/307	716/740	263.0/287.0	300/300	293/321	736/760
		HIGH	NONE	—	—	106.2	125	113	639	118.0	150	126	659
			279/270A00	18.8/25.0	52.1/60.1	171.4/181.4	175/200	173/182	691/699	183.2/193.2	200/200	186/195	711/719
			280/271A00	37.6/50.0	104.2/120.3	236.5/226.5	250/250	232/251	743/759	248.3/238.3	250/250	246/265	763/779
			281/272A00	56.3/75.0	156.4/180.4	262.6/286.6	300/300	292/320	795/819	274.4/298.4	300/350	306/334	815/839
	460-3-60	STD	NONE	—	—	49.1	60	51	291	55.3	60	58	303
			282/---A00	25.0	30.1	86.7	90	86	321	92.9	100	93	333
			283/---A00	50.0	60.1	109.2	125	120	351	115.4	125	128	363
			284/---A00	75.0	90.2	139.3	150	155	381	145.5	150	162	393
		MED	NONE	—	—	51.3	60	54	289	57.5	70	61	301
			282/273A00	25.0	30.1	88.9	90	88	319	95.1	100	96	331
			283/274A00	50.0	60.1	111.4	125	123	349	117.6	125	130	361
			284/275A00	75.0	90.2	141.5	150	158	379	147.7	175	165	391
		HIGH	NONE	—	—	57.0	70	60	329	63.2	80	68	341
			282/273A00	25.0	30.1	94.6	100	95	359	100.8	110	102	371
			283/274A00	50.0	60.1	117.1	125	129	389	123.3	150	137	401
			284/275A00	75.0	90.2	147.2	175	164	419	153.4	175	171	431
	575-3-60	STD	NONE	—	—	36.8	45	39	204	41.6	50	44	212
			285/---A00	24.8	23.9	66.7	70	66	228	71.5	80	72	236
			286/---A00	49.6	47.7	96.4	100	93	252	101.2	110	99	260
			287/---A00	74.4	71.6	108.4	125	121	276	113.2	125	127	284
		MED	NONE	—	—	38.2	50	40	202	43.0	50	46	210
			285/276A00	24.8	23.9	68.1	70	68	226	72.9	80	73	234
			286/277A00	49.6	47.7	97.8	100	95	250	102.6	110	101	258
			287/278A00	74.4	71.6	109.8	125	123	274	114.6	125	128	282
		HIGH	NONE	—	—	40.1	50	42	229	44.9	50	48	237
			285/276A00	24.8	23.9	70.0	70	70	253	74.8	80	75	261
			286/277A00	49.6	47.7	99.7	100	97	277	104.5	110	103	285
			287/278A00	74.4	71.6	111.7	125	125	301	116.5	125	130	309

See Legend and Notes on page 29.

UNIT WIRE/FUSE OR HACR BREAKER SIZING DATA WITH FACTORY-INSTALLED 2-SPEED INDOOR FAN OPTION (cont)

UNIT SIZE	NOM. V-Ph-Hz	IFM TYPE	ELEC. HTR			w/ PWRD C.O.							
						NO P.E.				w/ P.E. (pwrd fr/unit)			
			CRHEATER***A00 VERT/HORZ	Nom (kW)	FLA	MCA	Fuse or HACR Brkr	Disc. Size FLA	Disc. Size LRA	MCA	Fuse or HACR Brkr	Disc. Size FLA	Disc. Size LRA
50TCQ*24	208/230-3-60	STD	NONE	—	—	161.3/170.4	175/175	161/169	621/629	173.1/182.2	175/200	174/183	641/649
			279/---A00	18.8/25.0	52.1/60.1	226.4/215.5	250/225	221/238	673/689	238.2/227.3	250/250	234/252	693/709
			280/---A00	37.6/50.0	104.2/120.3	252.5/275.6	300/300	281/307	725/749	264.3/287.4	300/300	294/321	745/769
			281/---A00	56.3/75.0	156.4/180.4	99.6	125	105	565	111.4	125	119	585
		MED	NONE	—	—	164.8/174.8	175/175	165/174	617/625	176.6/186.6	200/200	178/188	637/645
			279/270A00	18.8/25.0	52.1/60.1	229.9/219.9	250/250	225/243	669/685	241.7/231.7	250/250	238/257	689/705
			280/271A00	37.6/50.0	104.2/120.3	256.0/280.0	300/300	285/312	721/745	267.8/291.8	300/350	298/326	741/765
			281/272A00	56.3/75.0	156.4/180.4	111.0	125	118	644	122.8	150	132	664
		HIGH	NONE	—	—	176.2/186.2	200/200	178/187	696/704	188.0/198.0	200/200	192/201	716/724
			279/270A00	18.8/25.0	52.1/60.1	241.3/231.3	250/250	238/256	748/764	253.1/243.1	300/300	252/270	768/784
			280/271A00	37.6/50.0	104.2/120.3	267.4/291.4	300/300	298/326	800/824	279.2/303.2	300/350	312/339	820/844
			281/272A00	56.3/75.0	156.4/180.4	51.3	60	54	293	57.5	70	61	305
	460-3-60	STD	NONE	—	—	88.9	90	88	323	95.1	100	96	335
			282/---A00	25.0	30.1	111.4	125	123	353	117.6	125	130	365
			283/---A00	50.0	60.1	141.5	150	158	383	147.7	175	165	395
			284/---A00	75.0	90.2	53.5	60	56	291	59.7	70	63	303
		MED	NONE	—	—	91.1	100	91	321	97.3	100	98	333
			282/273A00	25.0	30.1	113.6	125	125	351	119.8	125	133	363
			283/274A00	50.0	60.1	143.7	150	160	381	149.9	175	167	393
			284/275A00	75.0	90.2	59.2	70	63	331	65.4	80	70	343
		HIGH	NONE	—	—	96.8	100	98	361	103.0	110	105	373
			282/273A00	25.0	30.1	119.3	125	132	391	125.5	150	139	403
			283/274A00	50.0	60.1	149.4	175	167	421	155.6	175	174	433
			284/275A00	75.0	90.2	38.5	50	41	206	43.3	50	46	214
	575-3-60	STD	NONE	—	—	68.4	70	68	230	73.2	80	74	238
			285/---A00	24.8	23.9	98.1	100	95	254	102.9	110	101	262
			286/---A00	49.6	47.7	110.1	125	123	278	114.9	125	128	286
			287/---A00	74.4	71.6	39.9	50	42	204	44.7	50	48	212
		MED	NONE	—	—	69.8	70	70	228	74.6	80	75	236
			285/276A00	24.8	23.9	99.5	100	97	252	104.3	110	103	260
			286/277A00	49.6	47.7	111.5	125	125	276	116.3	125	130	284
			287/278A00	74.4	71.6	41.8	50	44	231	46.6	50	50	239
		HIGH	NONE	—	—	71.7	80	72	255	76.5	80	77	263
			285/276A00	24.8	23.9	101.4	110	99	279	106.2	110	105	287
			286/277A00	49.6	47.7	113.4	125	127	303	118.2	125	132	311
			287/278A00	74.4	71.6	161.3/170.4	175/175	161/169	621/629	173.1/182.2	175/200	174/183	641/649

See Legend and Notes on page 29.

ELECTRIC HEAT — 2-STAGE COOLING, SINGLE SPEED INDOOR FAN MOTOR (15 AND 20 TONS)

UNIT 50TCQ* SIZE	NOM. V-Ph-Hz	IFM TYPE	ELECTRICAL HEATER PART NUMBER CRHEATER***A00 VERT / HORZ	NOMINAL (kW)	APPLICATION (kW)	SINGLE POINT KIT PART NUMBER CRSINGLE***A00			
						No C.O. or Unpwrd C.O.		w/Pwrd C.O.	
						No P.E.	w/ P.E. (pwrd fr/unit)	No P.E.	w/ P.E. (pwrd fr/unit)
17	208/230 -3-60	STD	279/270A00	25.0	18.8 / 23.0	056A00	056A00	056A00	056A00
			280/271A00	50.0	37.6 / 45.9	056A00	056A00	056A00	056A00
			281/272A00	75.0	56.3 / 68.9	056A00	056A00	056A00	056A00
		MED	279/270A00	25.0	18.8 / 23.0	056A00	056A00	056A00	056A00
			280/271A00	50.0	37.6 / 45.9	056A00	056A00	056A00	056A00
			281/272A00	75.0	56.3 / 68.9	056A00	056A00	056A00	056A00
		HIGH	279/270A00	25.0	18.8 / 23.0	056A00	056A00	056A00	056A00
			280/271A00	50.0	37.6 / 45.9	056A00	056A00	056A00	056A00
			281/272A00	75.0	56.3 / 68.9	056A00	056A00	056A00	056A00
	460 -30-60	STD	282/273A00	25.0	23.0	057A00	057A00	057A00	057A00
			283/274A00	50.0	45.9	057A00	057A00	057A00	057A00
			284/275A00	75.0	68.9	057A00	057A00	057A00	057A00
		MED	282/273A00	25.0	23.0	057A00	057A00	057A00	057A00
			283/274A00	50.0	45.9	057A00	057A00	057A00	057A00
			284/275A00	75.0	68.9	057A00	057A00	057A00	057A00
		HIGH	282/273A00	25.0	23.0	057A00	057A00	057A00	057A00
			283/274A00	50.0	45.9	057A00	057A00	057A00	057A00
			284/275A00	75.0	68.9	057A00	057A00	057A00	057A00
	575 -3-60	STD	285/276A00	24.8	22.8	—	—	—	—
			286/277A00	49.6	45.6	057A00	057A00	057A00	057A00
			287/278A00	74.4	68.3	057A00	057A00	057A00	057A00
		MED	285/276A00	24.8	22.8	—	—	—	—
			286/277A00	49.6	45.6	057A00	057A00	057A00	057A00
			287/278A00	74.4	68.3	057A00	057A00	057A00	057A00
		HIGH	285/276A00	24.8	22.8	—	—	—	—
			286/277A00	49.6	45.6	057A00	057A00	057A00	057A00
			287/278A00	74.4	68.3	057A00	057A00	057A00	057A00
24	208/230 -3-60	STD**	279/ - - -A00	25.0	18.8 / 23.0	056A00	056A00	056A00	056A00
			280/ - - -A00	50.0	37.6 / 45.9	056A00	056A00	056A00	056A00
			281/ - - -A00	75.0	56.3 / 68.9	056A00	056A00	056A00	056A00
		MED-HIGH EFF	279/270A00	25.0	18.8 / 23.0	056A00	056A00	056A00	056A00
			280/271A00	50.0	37.6 / 45.9	056A00	056A00	056A00	056A00
			281/272A00	75.0	56.3 / 68.9	056A00	056A00	056A00	056A00
		HIGH-HIGH EFF	279/270A00	25.0	18.8 / 23.0	056A00	056A00	056A00	056A00
			280/271A00	50.0	37.6 / 45.9	056A00	056A00	056A00	056A00
			281/272A00	75.0	56.3 / 68.9	056A00	056A00	056A00	056A00
	460 -30-60	STD**	282/ - - -A00	25.0	23.0	057A00	057A00	057A00	057A00
			283/ - - -A00	50.0	45.9	057A00	057A00	057A00	057A00
			284/ - - -A00	75.0	68.9	057A00	057A00	057A00	057A00
		MED-HIGH EFF	282/273A00	25.0	23.0	057A00	057A00	057A00	057A00
			283/274A00	50.0	45.9	057A00	057A00	057A00	057A00
			284/275A00	75.0	68.9	057A00	057A00	057A00	057A00
		HIGH-HIGH EFF	282/273A00	25.0	23.0	057A00	057A00	057A00	057A00
			283/274A00	50.0	45.9	057A00	057A00	057A00	057A00
			284/275A00	75.0	68.9	057A00	057A00	057A00	057A00
	575 -3-60	STD**	285/ - - -A00	24.8	22.8	—	057A00	—	057A00
			286/ - - -A00	49.6	45.6	057A00	057A00	057A00	057A00
			287/ - - -A00	74.4	68.3	057A00	057A00	057A00	057A00
		MED-HIGH EFF	285/276A00	24.8	22.8	—	057A00	—	057A00
			286/277A00	49.6	45.6	057A00	057A00	057A00	057A00
			287/278A00	74.4	68.3	057A00	057A00	057A00	057A00
		HIGH-HIGH EFF	285/276A00	24.8	22.8	—	057A00	—	057A00
			286/277A00	49.6	45.6	057A00	057A00	057A00	057A00
			287/278A00	74.4	68.3	057A00	057A00	057A00	057A00

LEGEND

C.O. — Convenience outlet
EFF — Efficiency
IFM — Indoor fan motor
P.E. — Power Exhaust
PWRD — Powered convenience outlet
UNPWRD — Un-powered convenience outlet

** STD IFM not available on horizontal 50TCQ*24. STD IFM is available on vertical 50TCQ*24.

ELECTRIC HEAT — 2-STAGE COOLING, 2-SPEED INDOOR FAN MOTOR (15 AND 20 TONS)

UNIT 50TCQ* SIZE	NOM. V-Ph-Hz	IFM TYPE	ELECTRICAL HEATER PART NUMBER CRHEATER***A00 VERT / HORZ	NOMINAL (kW)	APPLICATION (kW)	SINGLE POINT KIT PART NUMBER CRSINGLE***A00			
						No C.O. or Unpwrd C.O.		w/Pwrd C.O.	
						No P.E.	w/ P.E. (pwrd fr/unit)	No P.E.	w/ P.E. (pwrd fr/unit)
17	208/230 -3-60	STD	279/270A00	25.0	18.8 / 23.0	056A00	056A00	056A00	056A00
			280/271A00	50.0	37.6 / 45.9	056A00	056A00	056A00	056A00
			281/272A00	75.0	56.3 / 68.9	056A00	056A00	056A00	056A00
		MED	279/270A00	25.0	18.8 / 23.0	056A00	056A00	056A00	056A00
			280/271A00	50.0	37.6 / 45.9	056A00	056A00	056A00	056A00
			281/272A00	75.0	56.3 / 68.9	056A00	056A00	056A00	056A00
		HIGH	279/270A00	25.0	18.8 / 23.0	056A00	056A00	056A00	056A00
			280/271A00	50.0	37.6 / 45.9	056A00	056A00	056A00	056A00
			281/272A00	75.0	56.3 / 68.9	056A00	056A00	056A00	056A00
	460 -30-60	STD	282/273A00	25.0	23.0	057A00	057A00	057A00	057A00
			283/274A00	50.0	45.9	057A00	057A00	057A00	057A00
			284/275A00	75.0	68.9	057A00	057A00	057A00	057A00
		MED	282/273A00	25.0	23.0	057A00	057A00	057A00	057A00
			283/274A00	50.0	45.9	057A00	057A00	057A00	057A00
			284/275A00	75.0	68.9	057A00	057A00	057A00	057A00
		HIGH	282/273A00	25.0	23.0	057A00	057A00	057A00	057A00
			283/274A00	50.0	45.9	057A00	057A00	057A00	057A00
			284/275A00	75.0	68.9	057A00	057A00	057A00	057A00
	575 -3-60	STD	285/276A00	24.8	22.8	—	—	—	—
			286/277A00	49.6	45.6	057A00	057A00	057A00	057A00
			287/278A00	74.4	68.3	057A00	057A00	057A00	057A00
		MED	285/276A00	24.8	22.8	—	—	—	—
			286/277A00	49.6	45.6	057A00	057A00	057A00	057A00
			287/278A00	74.4	68.3	057A00	057A00	057A00	057A00
		HIGH	285/276A00	24.8	22.8	—	—	—	—
			286/277A00	49.6	45.6	057A00	057A00	057A00	057A00
			287/278A00	74.4	68.3	057A00	057A00	057A00	057A00
24	208/230 -3-60	STD**	279/ - - -A00	25.0	18.8 / 23.0	056A00	056A00	056A00	056A00
			280/ - - -A00	50.0	37.6 / 45.9	056A00	056A00	056A00	056A00
			281/ - - -A00	75.0	56.3 / 68.9	056A00	056A00	056A00	056A00
		MED	279/270A00	25.0	18.8 / 23.0	056A00	056A00	056A00	056A00
			280/271A00	50.0	37.6 / 45.9	056A00	056A00	056A00	056A00
			281/272A00	75.0	56.3 / 68.9	056A00	056A00	056A00	056A00
		HIGH	279/270A00	25.0	18.8 / 23.0	056A00	056A00	056A00	056A00
			280/271A00	50.0	37.6 / 45.9	056A00	056A00	056A00	056A00
			281/272A00	75.0	56.3 / 68.9	056A00	056A00	056A00	056A00
	460 -30-60	STD**	282/ - - -A00	25.0	23.0	057A00	057A00	057A00	057A00
			283/ - - -A00	50.0	45.9	057A00	057A00	057A00	057A00
			284/ - - -A00	75.0	68.9	057A00	057A00	057A00	057A00
		MED	282/273A00	25.0	23.0	057A00	057A00	057A00	057A00
			283/274A00	50.0	45.9	057A00	057A00	057A00	057A00
			284/275A00	75.0	68.9	057A00	057A00	057A00	057A00
		HIGH	282/273A00	25.0	23.0	057A00	057A00	057A00	057A00
			283/274A00	50.0	45.9	057A00	057A00	057A00	057A00
			284/275A00	75.0	68.9	057A00	057A00	057A00	057A00
	575 -3-60	STD**	285/ - - -A00	24.8	22.8	—	057A00	—	057A00
			286/ - - -A00	49.6	45.6	057A00	057A00	057A00	057A00
			287/ - - -A00	74.4	68.3	057A00	057A00	057A00	057A00
		MED	285/276A00	24.8	22.8	—	057A00	—	057A00
			286/277A00	49.6	45.6	057A00	057A00	057A00	057A00
			287/278A00	74.4	68.3	057A00	057A00	057A00	057A00
		HIGH	285/276A00	24.8	22.8	—	057A00	—	057A00
			286/277A00	49.6	45.6	057A00	057A00	057A00	057A00
			287/278A00	74.4	68.3	057A00	057A00	057A00	057A00

LEGEND

C.O. — Convenience outlet
EFF — Efficiency
IFM — Indoor fan motor
P.E. — Power Exhaust
PWRD — Powered convenience outlet
UNPWRD — Un-powered convenience outlet

** STD IFM not available on horizontal 50TCQ*24. STD IFM is available on vertical 50TCQ*24.

Typical wiring schematics

TYPICAL POWER DIAGRAM, 208/230V

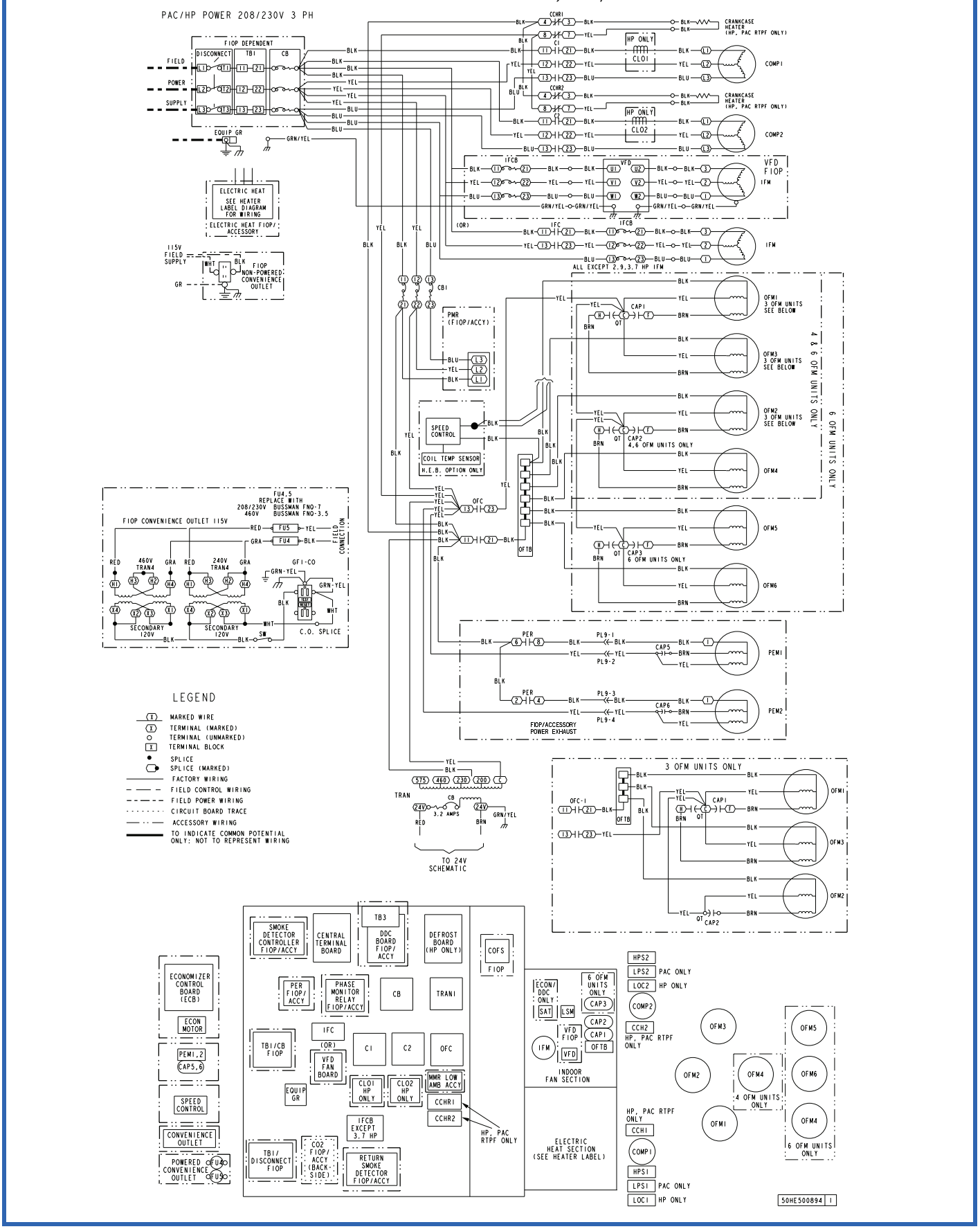

Typical wiring schematics (cont)

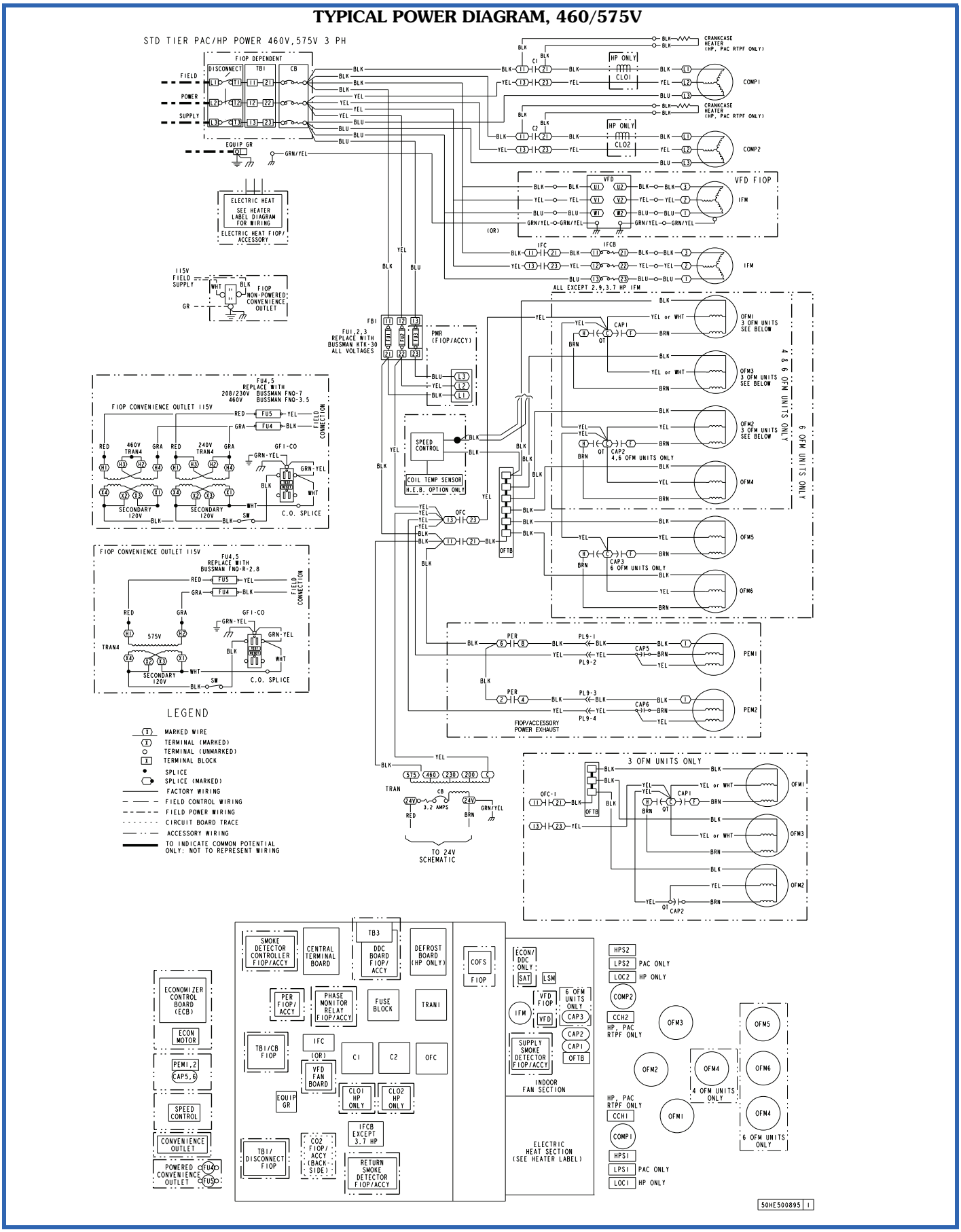

TYPICAL CONTROL DIAGRAM

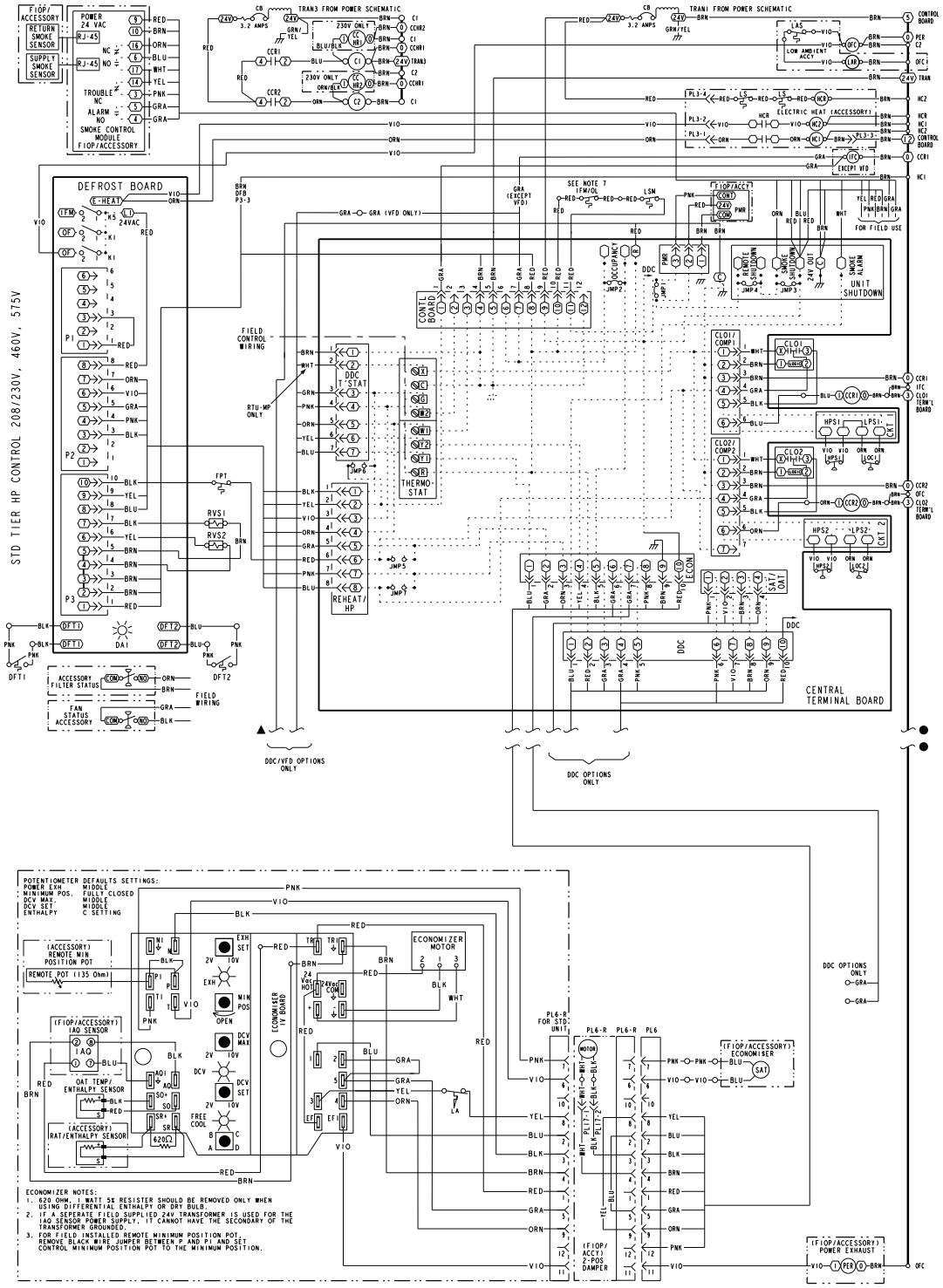

DEFROST BOARD DIP SWITCH SETTINGS

(DEFAULT)

30 MINUTES 60 MINUTES 90 MINUTES 120 MINUTES

FIELD SELECTABLE OPTIONS FOR TIME PERIOD BETWEEN DEFROST CYCLES (MINUTES).

SPEED UP — SHORT TEST WIRES (USE SHORT METAL OBJECT) FIELD SPEED-UP CYCLE

1) MOMENTARILY SHORT WIRES AND RELEASE TO BYPASS COMPRESSOR OFF DELAY.
2) SHORT FOR 1-10 SEC. AND RELEASE FOR FORCED DEFROST.
3) PERMANENT SHORT WILL BE IGNORED.

DEFROST WILL TERMINATE IN 30 SEC. IF DFT IS OPEN.
DEFROST WILL TERMINATE NORMALLY IF DFT IS CLOSED.

NOTES

1. IF ANY OF THE ORIGINAL WIRE FURNISHED MUST BE REPLACED, IT MUST BE REPLACED WITH TYPE 90 C WIRE OR ITS EQUIVALENT.
2. COMPRESSOR AND FAN MOTORS ARE THERMALLY PROTECTED. THREE PHASE MOTORS ARE PROTECTED AGAINST PRIMARY SINGLE PHASING CONDITIONS.
3. 208/230V UNIT TRAN IS WIRED FOR 230V UNIT. IF UNIT IS TO BE RUN WITH 208V POWER SUPPLY DISCONNECT BLK WIRE FROM 230V TAP AND CONNECT TO 200V TAP.
5. USE COPPER CONDUCTOR ONLY.
6. JUMPERS 5,6 AND 7 HAVE BEEN REMOVED FOR HEAT PUMP OPERATION.
7. IFM OL IS NOT USED ON ALL MODELS. WHEN NOT USED, RED LEADS ARE CONNECTED TOGETHER.

C	CONTACTOR,COMPRESSOR	GR	GROUND	PER	POWER EXHAUST RELAY
CAP	CAPACITOR	HPS	HIGH PRESSURE SWITCH	PL	PLUG ASSEMBLY
CB	CIRCUIT BREAKER	IAQ	INDOOR AIR QUALITY	POT	POTENTIOMETER
CCH	CRANKCASE HEATER	IFC	INDOOR FAN CONTACTOR	PMR	PHASE MONITOR RELAY
CCHR	CRANKCASE HEATER RELAY	IFM	INDOOR FAN MOTOR	QT	QUADRUPLE TERMINAL
CCN	CARRIER COMFORT NETWORK	IRH	INDOOR RELATIVE HUMIDITY	R	RELAY
CCR	COMPRESSOR CONTROL RELAY	LA	LOW AMBIENT LOCKOUT	RAT	RETURN AIR TEMP. SEN
CLO	COMPRESSOR LOCKOUT	LAR	LOW AMBIENT RELAY	RMT OCC	REMOTE OCCUPANCY
CMP SAFE	COMPRESSOR SAFFETY	LAS	LOW AMBIENT SWITCH	RTPF	ROUND TUBE PLATE FIN
COFS	CONDENSATE OVERFLOW SWITCH	LOC	LOSS OF CHARGE SWITCH		CONDENSER COIL
COMP	COMPRESSOR MOTOR	LOOP PWR	CURRENT LOOP POWER	RVS	REVERSING VALVE SWITCH
CTB	CENTRAL TERMINAL BOARD	LSM	LIMIT SWITCH (MANUAL RESET)	SAT	SUPPLY AIR TEMP. SENSOR
DAI	DEFROST ACTIVE INDICATOR	MMR	MOTORMASTER RELAY	SEN	SENSOR
DDC	DIRECT DIGITAL CONTROL	OAQ	OUTDOOR AIR QUALITY	SET	SET POINT OFFSET
DFB	DEFROST BOARD	OAT	OUTDOOR AIR TEMP. SEN	SFS	SUPPLY FAN STATUS
DFT	DEFROST THERMOSTAT	OFC	OUTDOOR FAN CONTACTOR	TDR	TIME DELAY RELAY
FIOP	FACTORY INSTALLED OPTION	OFM	OUTDOOR FAN MOTOR	TRAN	TRANSFORMER
FPT	FREEZE PROTECTION THERMOSTAT	OFTB	OUTDOOR FAN TERMINAL BLOCK	VFD	VARIABLE FREQUENCY DRIVE
FSD	FIRE SHUT DOWN	OLR	OVERLOAD RELAY		
FU	FUSE				

50HE500937 D

Typical wiring schematics (cont)

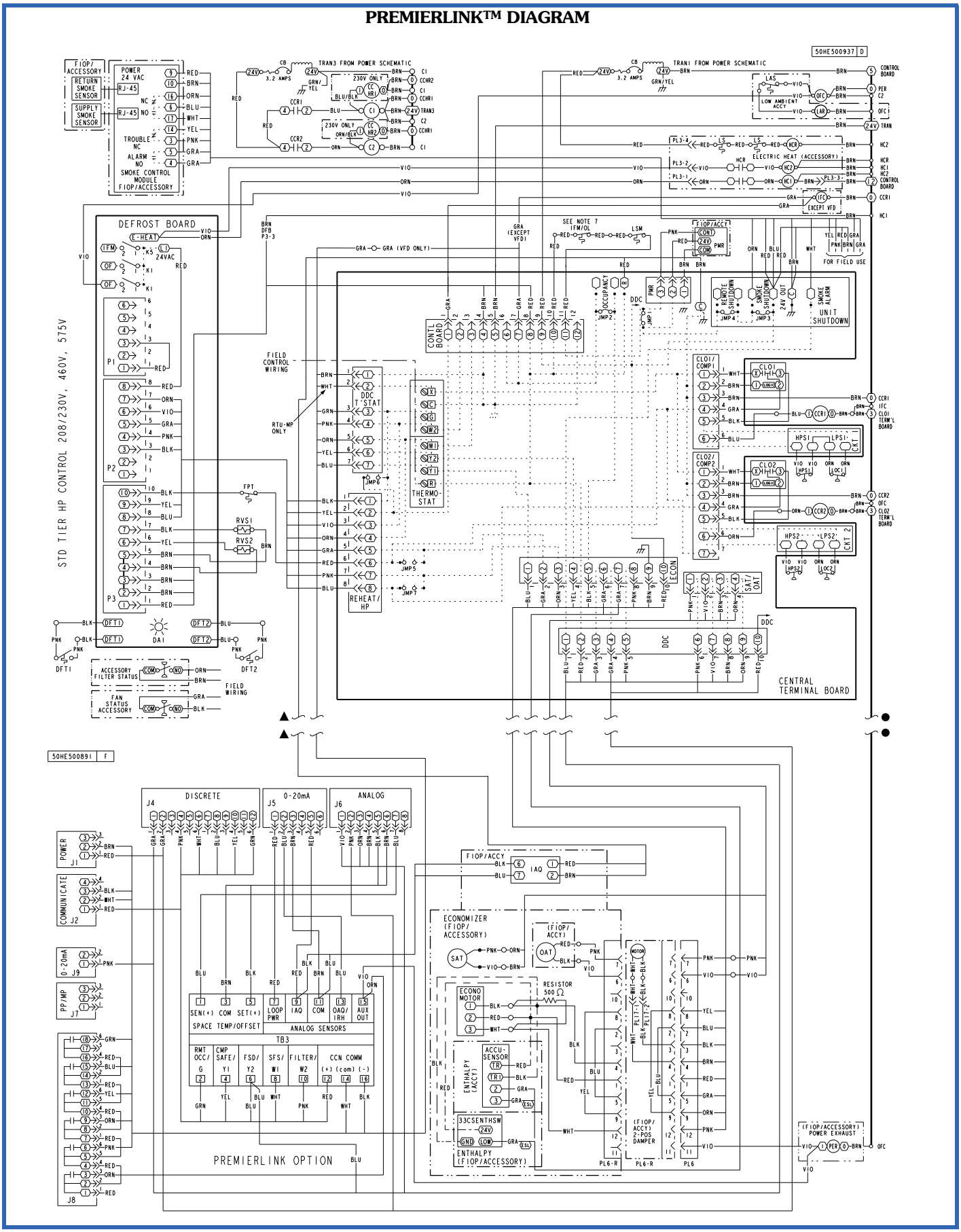

RTU OPEN SYSTEM CONTROL WIRING DIAGRAM

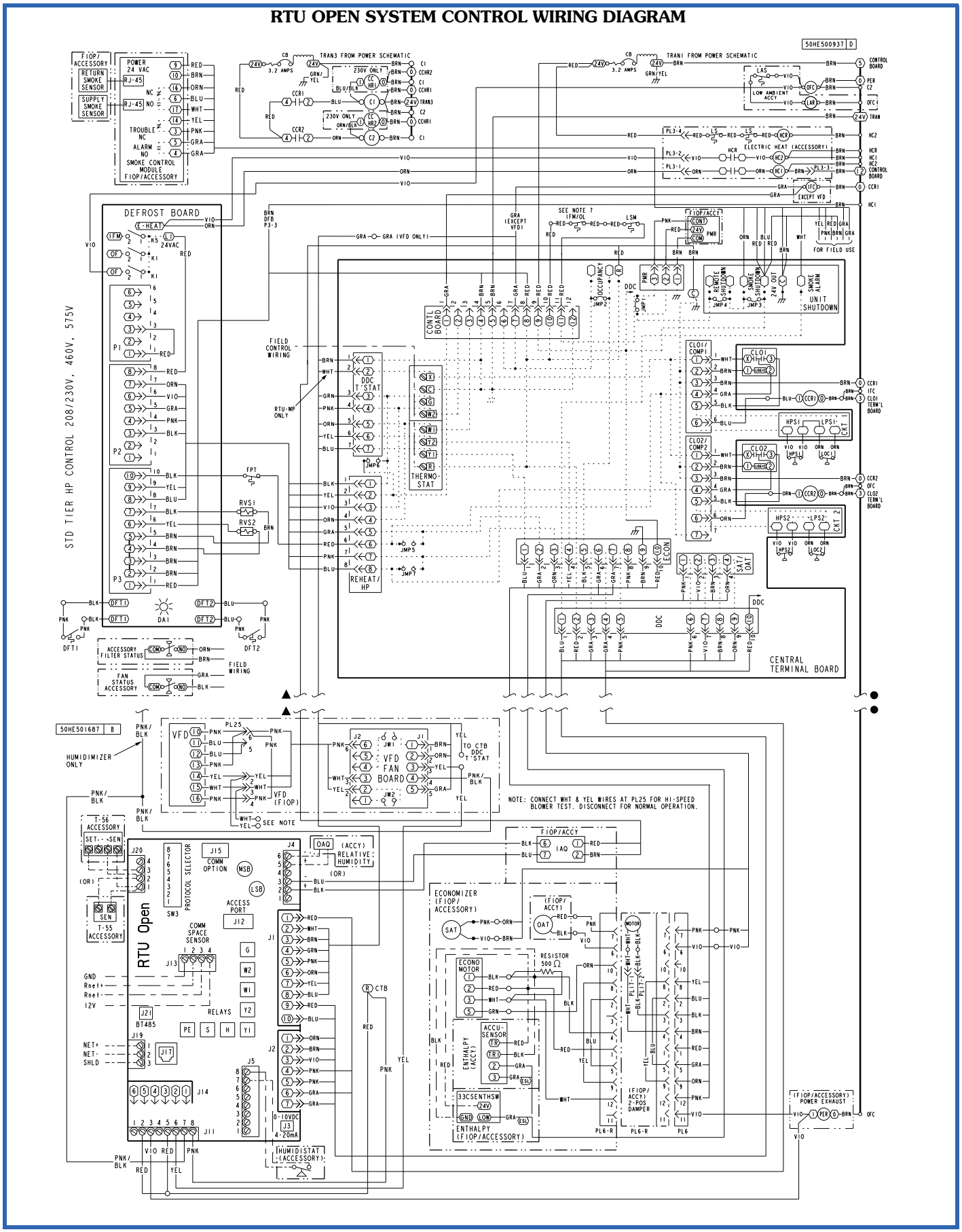

Sequence of Operation

Cooling, unit without economizer

Cooling (Single speed indoor fan motor) — When thermostat calls for cooling, terminals G and Y1 are energized. The indoor fan contactor (IFC), reversing valve solenoid (RVS) and compressor contactor are energized and indoor fan motor, compressor, and outdoor fan starts. The outdoor fan motor runs continuously while unit is cooling.

Two-stage models: If Stage 1 cooling does not satisfy the space load, the space temperature will rise until thermostat calls for Stage 2 cooling (Y2 closes). Defrost Board activates Stage 2 Compressor. Reversing valve 2 switches to Cooling position. Compressor 2 contactor is energized; Compressor 2 starts and Circuit 2 operates in Cooling mode.

When Cooling Stage 2 is satisfied, thermostat Y2 opens. Compressor 2 contactor is de-energized; Compressor 2 stops. Reversing Valve 2 remains energized.

When Cooling Stage 1 is satisfied, thermostat Y1 opens. Compressor 1 contactor is de-energized; Compressor 1 stops. Outdoor fan relay is de-energized; outdoor fans stop. After the Fan Delay period, the Indoor fan contactor is de-energized; indoor fan stops (unless Continuous Fan operation has been selected). Reversing Valve 1 remains energized.

Reversing valve solenoids are energized in Cooling modes. Each solenoid will remain energized until the next Heating mode is initiated for this circuit.

Cooling (2-speed indoor fan motor) — Per ASHRAE 90.1-2016 and IECC-2015 standards, during the first stage of cooling operation the VFD will adjust the fan motor to provide 66% of the total cfm established for the unit. When a call for the second stage of cooling is required, the VFD will allow the total cfm for the unit established (100%).

Heating, unit without economizer

Upon a request for heating from the space thermostat, terminal W1 will be energized with 24V. The IFC, outdoor fan contactor (OFC), C1, and C2 will be energized. The indoor fan, outdoor fans, and compressor no. 1, and compressor no. 2 are energized and reversing valves are de-energized and switch position.

If the space temperature continues to fall while W1 is energized, W2 will be energized with 24V, and the heater contactor(s) (HC) will be energized, which will energize the electric heater(s).

When the space thermostat is satisfied, W2 will be de-energized first, and the electric heater(s) will be de-energized.

Upon a further rise in space temperature, W1 will be de-energized.

Two compressor models: When the thermostat calls for heating, terminal W1 is energized. Defrost Board de-energizes both reversing valve solenoids and reversing valves move to Heating position. The indoor fan contactor is energized; indoor fan motor starts. Outdoor fan relay is energized; both outdoor fan motors run. Compressor contactors C1 and C2 are energized; both refrigeration circuits operate in Heating mode.

If Stage 1 heating does not satisfy the space load, the space temperature will fall until thermostat calls for Stage 2 heating (W2 closes). Terminal W2 is energized. Defrost Board issues an output at EHEAT. Heater contactor 1 and heater contactor 2 (if installed) are energized; all electric heaters are energized.

When space heating load is partially satisfied, thermostat terminal W2 is de-energized; heater contactors are de-energized and all electric heat is terminated. Stage 1 heating continues.

When the space heating load is fully satisfied, thermostat terminal W1 is also de-energized.

Reversing valve solenoids remain de-energized until the next call for Cooling mode is initiated.

Cooling, unit with EconoMi$er® IV or EconoMi$er® X

When free cooling is not available, the compressors will be controlled by the zone thermostat. When free cooling is available, the outdoor air damper is modulated by the EconoMi$er IV or X control to provide a 50 to 55°F (10 to 13°C) mixed air temperature into the zone. As the mixed air temperature fluctuates above 55°F or below 50°F (13°C or 10°C), the dampers will be modulated (open or close) to bring the mixed air temperature back within control.

If mechanical cooling is utilized with free cooling, the outdoor air damper will maintain its current position at the time the compressor is started. If the increase in cooling capacity causes the mixed air temperature to drop below 45°F (7°C), then the outdoor air damper position will be decreased to the minimum position. If the mixed air temperature continues to fall, the outdoor air damper will close. Control returns to normal once the mixed air temperature rises above 48°F (9°C).

If optional power exhaust is installed, as the outdoor air damper opens and closes, the power exhaust fans will be energized and de-energized.

If field-installed accessory CO_2 sensors are connected to the EconoMi$er IV or X control, a demand controlled ventilation strategy will begin to operate. As the CO_2 level in the zone increases above the CO_2 set point, the minimum position of the damper will be increased proportionally. As the CO_2 level decreases because of the increase in fresh air, the outdoor air damper will be proportionally closed.

For EconoMi$er IV or X operation, there must be a thermostat call for the fan (G). If the unit is occupied and the fan is on, the damper will operate at minimum position. Otherwise, the damper will be closed.

When the EconoMi$er IV or X control is in the occupied mode and a call for cooling exists (Y1 on the thermostat), the control will first check for indoor fan operation. If the fan is not on, then cooling will not be activated. If the fan is on, then the control will open the EconoMi$er IV or X damper to the minimum position.

On the initial power to the EconoMi$er IV or X control, it will take the damper up to $2^1/_2$ minutes before it begins to position itself. Any change in damper position will take up to 30 seconds to initiate. Damper movement from full closed to full open (or vice versa) will take between $1^1/_2$

and $2^1/_2$ minutes. If free cooling can be used as determined from the appropriate changeover command (switch, dry bulb, enthalpy curve, differential dry bulb, or differential enthalpy), then the control will modulate the dampers open to maintain the mixed air temperature set point at 50 to 55°F (10 to 13°C).

If there is a further demand for cooling (cooling second stage — Y2 is energized), then the control will bring on compressor stage 1 to maintain the mixed air temperature set point. The EconoMi$er IV or X damper will be open at maximum position. EconoMi$er IV or X operation is limited to a single compressor.

2-Speed Note: When operating in ventilation mode only, the indoor fan motor will automatically adjust to two-thirds of the total cfm established.

Heating, unit with EconoMi$er

When the room temperature calls for heat through terminal W1, the indoor (evaporator) fan contactor (IFC) and heater contactor no. 1 (HC1) are energized and the reversing valve(s) de-energize and switches position. On units equipped for 2 stages of heat, when additional heat is needed, heater contactor no. 2 is energized through W2. The economizer damper moves to the minimum position. When the thermostat is satisfied, the damper moves to the fully closed position.

Cooling, unit with EconoMi$er2, PremierLink™ controller and a thermostat

When free cooling is not available, the compressors will be controlled by the PremierLink controller in response to the Y1 and Y2 inputs from the thermostat.

The PremierLink controller will use the following information to determine if free cooling is available:

- Indoor fan has been on for at least 30 seconds.
- The SPT, SAT, and OAT inputs must have valid readings.
- OAT must be less than 75°F (24°C).
- OAT must be less than SPT.
- Enthalpy must be LOW (may be jumpered if an enthalpy sensor not available).
- Economizer position is NOT forced.

Pre-cooling occurs when there is no call from the thermostat except G. Pre-cooling is defined as the economizer modulates to provide 70°F (21°C) supply air.

When free cooling is available the PremierLink controller will control the compressors, energize the reversing valve(s) and economizer to provide a supply air temperature determined to meet the Y1 and Y2 calls from the thermostat.

If optional power exhaust is installed, as the outdoor air damper opens and closes, the power exhaust fans will be energized and de-energized.

If field-installed accessory CO_2 sensors are connected to the PremierLink controller, a PID controlled demand ventilation strategy will begin to operate. As the CO_2 level in the zone increases above the CO_2 set point, the minimum position of the damper will be increased proportionally. As the CO_2 level decreases because of the increase in fresh air, the outdoor air damper will be proportionally closed.

Heating, unit with EconoMi$er2, PremierLink™ controller and a thermostat

When the thermostat calls for heating, terminal W1 is energized. The PremierLink controller will move the economizer damper to the minimum position if there is a call for G and closed if there is a call for W1 without G. In order to prevent thermostat from short cycling, the unit is locked into the heating mode for at least 10 minutes when W1 is energized. The reversing valve solenoid(s) de-energizes and switches position.

On units equipped for two stages of heat, when additional heat is needed, W2 is energized and the electric heat (if used) comes on. When the thermostat is satisfied and W1 is de-energized, the IFM stops.

Cooling, unit with EconoMi$er2, PremierLink™ controller and a room sensor

When free cooling is not available, the compressors will be controlled by the PremierLink controller using a PID Error reduction calculation. The PremierLink controller will use the following information to determine if free cooling is available:

- Indoor fan has been on for at least 30 seconds.
- The SPT, SAT, and OAT inputs must have valid readings.
- OAT must be less than 75°F (24°C).
- OAT must be less than SPT.
- Enthalpy must be LOW (may be jumpered if an enthalpy sensor is not available).
- Economizer position is NOT forced.

When free cooling is available, the outdoor air damper is positioned through the use of a Proportional Integral (PID) control process to provide a calculated supply air temperature into the zone. The supply air will maintain the space temperature between the heating and cooling set points.

The PremierLink controller will integrate the compressors stages with the economizer based on similar logic as the three routines listed in the previous section. The SASP will float up and down based on the error reduction calculations that compare space temperature and space set point. The reversing valves will be energized. If an optional power exhaust is installed, as the outdoor air damper opens and closes, the power exhaust fans will be energized and de-energized. If field-installed accessory CO_2 sensors are connected to the PremierLink controller, a PID-controlled demand ventilation strategy will begin to operate. As the CO_2 level in the zone increases above the CO_2 set point, the minimum position of the damper will be increased proportionally. As the CO_2 level decreases because of the increase in fresh air, the outdoor air damper will be proportionally closed.

Heating, unit with EconoMi$er2, PremierLink™ controller and a room sensor

Every 40 seconds the controller will calculate the required heat stages (maximum of 3) to maintain Supply Air Temperature (SAT) if the following qualifying conditions are met:

- Indoor fan has been on for at least 30 seconds.
- COOL mode is not active.
- OCCUPIED, TEMP.COMPENSATED START or HEAT mode is active.
- SAT reading is available.
- Fire shutdown mode is not active.

If all of the above conditions are met, the number of heat stages is calculated; otherwise the required number of heat stages will be set to 0.

If the PremierLink controller determines that heat stages are required, the economizer damper will be moved to minimum position if occupied and closed if unoccupied.

Defrost

When the temperature of the outdoor coil drops below 28°F (-2°C) as sensed by the defrost thermostat (DFT2) and the defrost timer is at the end of a timed period (adjustable at 30, 60, 90 or 120 minutes), reversing valve solenoids (RVS1 and RVS2) are energized and the OFC is de-energized. This switches the position of the reversing valves and shuts off the outdoor fan. The electric heaters (if installed) will be energized.

The unit continues to defrost until the coil temperature as measured by DFT2 reaches 65°F (18°C), or the duration of defrost cycle completes a 10-minute period. During the Defrost mode, if circuit 1 defrosts first, RVS1 will oscillate between Heating and Cooling modes until the Defrost mode is complete.

At the end of the defrost cycle, the electric heaters (if installed) will be de-energized; the reversing valves switch and the outdoor fan motor will be energized. The unit will now operate in the Heating mode. If the space thermostat is satisfied during a defrost cycle, the unit will continue in the Defrost mode until the time or temperature constraints are satisfied.

Automatic changeover

When the system selection switch is set at AUTO position, unit automatically changes from heating operation to cooling operation when the temperature of the conditioned space rises to the cooling level setting. When the temperature of the conditioned space falls to the heating level setting, unit automatically changes from cooling to heating operation (with a 3°F dead-band in between).

Continuous air circulation

Turn unit power on. Set system control at OFF position. Set fan switch at ON position. The indoor fan contactor is energized through the thermostat switch and the indoor fan runs continuously.

Emergency heat

When the switch is on (thermostat is set to the EM HT position), compressor circuit and outdoor thermostats are bypassed, and the second stage of thermostat energizes the indoor blower and the electric resistance heaters.

Guide specifications — 50TCQ-17-24

Note about this specification: These specifications are written in "Masterformat" as published by the Construction Specification Institute. Please feel free to copy this specification directly into your building spec.

Cooling only/electric heat packaged rooftop HVAC guide specifications

Size range: **15 and 20 nominal tons**

Carrier Model Number: **50TCQD17,24**

Part 1 — (23 06 80) Schedules for decentralized HVAC equipment

1.01 (23 06 80.13) Decentralized Unitary HVAC Equipment Schedule

A. (23 06 80.13.A.) Rooftop unit schedule

1. Schedule is per the project specification requirements.

Part 2 — (23 07 16) HVAC equipment insulation

2.01 (23 07 16.13) Decentralized, Rooftop Units:

A. (23 07 16.13.A.) Evaporator fan compartment:

1. Interior cabinet surfaces shall be insulated with a minimum $^1/_2$-in. thick, minimum $1^1/_2$-lb density, flexible fiberglass insulation bonded with a phenolic binder, neoprene coated on the air side.
2. Insulation and adhesive shall meet NFPA 90A requirements for flame spread and smoke generation.

Part 3 — (23 09 13) Instrumentation and control devices for HVAC

3.01 (23 09 13.23) Sensors and Transmitters

A. (23 09 13.23.A.) Thermostats

1. Thermostat must
   a. energize both "W" and "G" when calling for heat.
   b. have capability to energize 2 different stages of cooling, and 2 different stages of heating.
   c. include capability for occupancy scheduling.

Part 4 — (23 09 23) Direct-digital control system for HVAC

4.01 (23 09 23.13) Decentralized, Rooftop Units:

A. (23 09 23.13.A.) PremierLink™ controller

1. Shall be ASHRAE 62-2001 compliant.
2. Shall accept 18-32 VAC input power.
3. Shall have an operating temperature range from –40°F (–40°C) to 158°F (70°C), 10% to 95% RH (non-condensing).
4. Shall include an integrated economizer controller to support an economizer with 4 to 20 mA actuator input and no microprocessor controller.
5. Controller shall accept the following inputs: space temperature, setpoint adjustment, outdoor air temperature, indoor air quality, outdoor air quality, indoor relative humidity, compressor lock-out, fire shutdown, enthalpy, fan status, remote time clock/door switch.
6. Shall accept a CO_2 sensor in the conditioned space, and be Demand Controlled Ventilation (DCV) ready.
7. Shall provide the following outputs: economizer, fan, cooling stage 1, cooling stage 2, heat stage 1, heat stage 2, heat stage 3/exhaust/reversing valve/dehumidify/occupied.
8. Unit shall provide surge protection for the controller through a circuit breaker.
9. Shall be Internet capable, and communicate at a Baud rate of 38.4K or faster.
10. Shall have an LED display independently showing the status of activity on the communication bus, and processor operation.
11. Shall include an EIA-485 protocol communication port, an access port for connection of either a computer or a Carrier technician tool, an EIA-485 port for network communication to intelligent space sensors and displays, and a port to connect an optional LonWorks* plug-in communications card.
12. Shall have built-in Carrier Comfort Network® (CCN) protocol, and be compatible with other CCN devices, including ComfortVIEW controllers.
13. Shall have built-in support for Carrier technician tool.
14. Software upgrades will be accomplished by local download. Software upgrades through chip replacements are not allowed.
15. Shall be shock resistant in all planes to 5G peak, 11ms during operation, and 100G peak, 11ms during storage.
16. Shall be vibration resistant in all planes to 1.5G at 20-300 Hz.
17. Shall support a bus length of 4000 ft (1219 m) max, 60 devices per 1000 ft (305 m) section, and 1 RS-485 repeater per 1000 ft (305 m) sections.

B. (23 09 23.13.B.) RTU Open protocol, direct digital controller:

1. Shall be ASHRAE 62-2001 compliant.
2. Shall accept 18-30VAC, 50-60Hz, and consume 15VA or less power.
3. Shall have an operating temperature range from –40°F (–40°C) to 130°F (54°C), 10% to 90% RH (non-condensing).
4. Shall include built-in protocol for BACnet† (MS/TP and PTP modes), Modbus** (RTU and ASCII), Johnson N2 and LonWorks. LonWorks Echelon processor required for all Lon applications shall be contained in separate communication board.

* LonWorks is a registered trademark of Echelon Corporation.
† BACnet is a registered trademark of ASHRAE (American Society of Heating, Refrigerating and Air-Conditioning Engineers).
** Modbus is a registered trademark of Schneider.

5. Shall allow access of up to 62 network variables (SNVT). Shall be compatible with all open controllers
6. Baud rate Controller shall be selectable using a dip switch.
7. Shall have an LED display independently showing the status of serial communication, running, errors, power, all digital outputs, and all analog inputs.
8. Shall accept the following inputs: space temperature, set point adjustment, outdoor air temperature, indoor air quality, outdoor air quality, compressor lock-out, fire shutdown, enthalpy switch, and fan status/filter status/humidity/remote occupancy.
9. Shall provide the following outputs: economizer, fan, cooling stage 1, cooling stage 2, heat stage 1, heat stage 2, heat stage 3/exhaust/reversing valve.
10. Shall have built-in surge protection circuitry through solid-state polyswitches. Polyswitches shall be used on incoming power and network connections. Polyswitches will return to normal when the "trip" condition clears.
11. Shall have a battery backup capable of a minimum of 10,000 hours of data and time clock retention during power outages.
12. Shall have built-in support for Carrier technician tool.
13. Shall include an EIA-485 protocol communication port, an access port for connection of either a computer or a Carrier technician tool, an EIA-485 port for network communication to intelligent space sensors and displays, and a port to connect an optional LonWorks communications card.
14. Software upgrades will be accomplished by either local or remote download. No software upgrades through chip replacements are allowed.

Part 5 — (23 09 33) Electric and electronic control system for HVAC

5.01 (23 09 33.13) Decentralized, rooftop units:

A. (23 09 33.13.A.) General:

1. Shall be complete with self-contained low-voltage control circuit protected by a resettable circuit breaker on the 24-v transformer side. Transformer shall have 75VA capability.
2. Shall utilize color-coded wiring.
3. Shall include a central control terminal board to conveniently and safely provide connection points for vital control functions such as: smoke detectors, phase monitor, economizer, thermostat, DDC control options, and low and high pressure switches.
4. Unit shall include a minimum of one 8-pin screw terminal connection board for connection of control wiring.
5. Shall include integrated defrost system to prevent excessive frost accumulation during heating duty, and shall be controlled as follows:
   a. Defrost shall be initiated on the basis of time and coil temperature.
   b. A 30,60,90,120 minute timer shall activate the defrost cycle only if the coil temperature is low enough to indicate a heavy frost condition.
   c. Defrost cycle shall terminate when defrost thermostat is satisfied and shall have a positive termination time of 10 minutes.
6. Defrost system shall also include:
   a. Defrost Cycle Indicator LED.
   b. Dip switch selectable defrost time between 30, 60, 90 and 120 minutes. Factory set at 30 minutes.
   c. Molded plug connection to ensure proper connection.

B. (23 09 33.23.B.) Safeties:

1. Compressor over-temperature, over-current.
2. Loss of charge switch.
   a. Units with 2 compressors shall have different sized connectors for the circuit 1 and circuit 2 loss of charge switches. They shall physically prevent the cross-wiring of the safety switches between circuits 1 and 2.
   b. Loss of charge switch shall use different color wire than the high pressure switch. The purpose is to assist the installer and service technician to correctly wire and or troubleshoot the rooftop unit.
3. High-pressure switch.
   a. Units with 2 compressors shall have different sized connectors for the circuit 1 and circuit 2 high pressure switches. They shall physically prevent the cross-wiring of the safety switches between circuits 1 and 2.
   b. High-pressure switch shall use different color wire than the low-pressure switch. The purpose is to assist the installer and service technician to correctly wire and or troubleshoot the rooftop unit.
4. Freeze protection thermostat, evaporator coil.
5. Automatic reset, motor thermal overload protector.

Part 6 — (23 09 93) Sequence of operations for HVAC controls

6.01 (23 09 93.13) Decentralized, Rooftop Units:

A. (23 09 93.13.A.) INSERT SEQUENCE OF OPERATION

Part 7 — (23 40 13) Panel air filters

7.01 (23 40 13.13) Decentralized rooftop units:

A. (23 40 13.13.A.) Standard filter section

1. Shall consist of factory-installed, low velocity, disposable 2-in. thick fiberglass filters of commercially available sizes.
2. Unit shall use only one filter size. Multiple sizes are not acceptable.
3. Filters shall be accessible through a dedicated, weather tight panel.
4. 4-in. filter capabilities shall be capable with pre-engineered and approved Carrier filter track field-installed accessory. This kit requires field furnished filters.

Part 8 — (23 81 19) Self-contained air conditioners

8.01 (23 81 19.13) Medium-Capacity Self-Contained Air Conditioners (50TCQD17,24)

A. (23 81 19.13.A.) General

1. Outdoor, rooftop mounted, electrically controlled, heating and cooling unit utilizing a hermetic scroll compressor(s) for cooling duty and gas combustion for heating duty.
2. Factory assembled, single-piece heating and cooling rooftop unit. Contained within the unit enclosure shall be all factory wiring, piping, controls, and special features required prior to field start-up.
3. Unit shall use Puron® (R-410A) refrigerant.
4. Unit shall be installed in accordance with the manufacturer's instructions.
5. Unit must be selected and installed in compliance with local, state, and federal codes.

B. (23 81 19.13.B.) Quality Assurance

1. Unit meets ASHRAE 90.1-2016 and IECC*-2015 minimum efficiency requirements.
2. Unit shall be rated in accordance with AHRI Standard 340/360.
3. Unit shall be designed to conform to ASHRAE 15.
4. Unit shall be ETL-tested and certified in accordance with ANSI Z21.47 Standards and ETL-listed and certified under Canadian standards as a total package for safety requirements.
5. Insulation and adhesive shall meet NFPA 90A requirements for flame spread and smoke generation.
6. Unit casing shall be capable of withstanding 500-hour salt spray exposure per ASTM B117 (scribed specimen).
7. Unit casing shall be capable of withstanding Federal Test Method Standard No. 141 (Method 6061) 5000-hour salt spray.
8. Roof curb shall be designed to conform to NRCA Standards.
9. Unit shall be subjected to a completely automated run test on the assembly line. The data for each unit will be stored at the factory, and must be available upon request.
10. Unit shall be designed in accordance with UL Standard 1995, including tested to withstand rain.
11. Unit shall be constructed to prevent intrusion of snow and tested to prevent snow intrusion into the control box up to 40 mph.
12. Unit shake tested to assurance level 1, ASTM D4169 to ensure shipping reliability.
13. High Efficiency Motors listed shall meet section 313 of the Energy Independence and Security Act of 2007 (EISA 2007).

C. (23 81 19.13.C.) Delivery, storage, and handling

1. Unit shall be stored and handled per manufacturer's recommendations.
2. Lifted by crane requires either shipping top panel or spreader bars.
3. Unit shall only be stored or positioned in the upright position.

D. (23 81 19.13.D.) Project conditions

As specified in the contract.

E. (23 81 19.13.E.) Operating characteristics

1. Unit shall be capable of starting and running at 115°F (46°C) ambient outdoor temperature, meeting maximum load criteria of AHRI Standard 340/360 at ± 10% voltage.
2. Compressor with standard controls shall be capable of operation down to 30°F (–1°C), ambient outdoor temperatures. Accessory kits are necessary if mechanically cooling at ambient temperatures below 30°F (–1°C).
3. Unit shall discharge supply air horizontally as shown on contract drawings.
4. Unit shall be factory configured and ordered for vertical or horizontal supply and return configurations.
5. Unit shall be factory furnished for horizontal configuration without the use of special conversion kits. No field kit conversion is possible.
6. Unit shall be capable of mixed operation: vertical supply with horizontal return or horizontal supply with vertical return.

F. (23 81 19.13.F.) Electrical Requirements

1. Main power supply voltage, phase, and frequency must match those required by the manufacturer.

* IECC is a registered trademark of International Code Council, Inc.

G. (23 81 19.13.G.) Unit cabinet

1. Unit cabinet shall be constructed of galvanized steel, and shall be bonderized and coated with a pre-painted baked enamel finish on all externally exposed surfaces.
2. Unit cabinet exterior paint shall be: film thickness, (dry) 0.003 inches minimum, gloss (per ASTM D523, 60°F): 60, Hardness: H to 2H Pencil hardness.
3. Evaporator fan compartment interior cabinet insulation shall conform to AHRI Standard 340/360 minimum exterior sweat criteria. Interior surfaces shall be insulated with a minimum $^1/_2$-in. thick, 1-lb density, flexible fiberglass insulation, neoprene coated on the air side. Aluminum foil-faced fiberglass insulation shall be used in the heat compartment.
4. Base of unit shall have a minimum of four locations for thru-the-base electrical connections. Connections shall be internal to the cabinet to protect from environmental issues.
5. Base rail
   a. Unit shall have base rails on a minimum of 2 sides.
   b. Holes shall be provided in the base rails for rigging shackles to facilitate maneuvering and overhead rigging.
   c. Holes shall be provided in the base rail for moving the rooftop by fork truck.
   d. Base rail shall be a minimum of 16-gauge thickness.
6. Condensate pan and connections:
   a. Shall be a sloped condensate drain pan made of a non-corrosive material.
   b. Shall comply with ASHRAE Standard 62.
   c. Shall use a $^3/_4$-in. to 14 NPT drain connection, at the end of the drain pan. Connection shall be made per manufacturer's recommendations.
7. Top panel:

   Shall be a multi-piece top panel linked with water tight flanges and interlocking systems.
8. Electrical connections
   a. All unit power wiring shall enter unit cabinet at a single, factory-prepared, knockout location.
   b. Thru-the-base capability.
      1) Thru-the-base provisions / connections are available as standard with every unit. When bottom connections are required, field furnished couplings are required.
      2) No basepan penetration, other than those authorized by the manufacturer, is permitted.
9. Component access panels (standard)
   a. Cabinet panels shall be easily removable for servicing.
   b. Unit shall have one factory-installed, removable, filter access panel.
   c. Panels covering control box and filter shall have molded composite handles while the blower access door shall have an integrated flange for easy removal.
   d. Handles shall be UV modified, composite, permanently attached, and recessed into the panel.
   e. Screws on the vertical portion of all removable access panel shall engage into heat resistant, molded composite collars.
   f. Collars shall be removable and easily replaceable using manufacturer recommended parts.

H. (23 81 19.13.H.) Coils

1. Standard aluminum/copper coils: on all models.
   a. Standard evaporator and condenser coils shall have aluminum lanced plate fins mechanically bonded to seamless internally grooved copper tubes with all joints brazed.
   b. Evaporator coils shall be leak tested to 150 psig, pressure tested to 450 psig, and qualified to UL 1995 burst test at 1775 psig.
   c. Condenser coils shall be leak tested to 150 psig, pressure tested to 650 psig, and qualified to UL 1995 burst test at 1980 psig.
2. Optional Pre-coated aluminum fin condenser coils: on all models.
   a. Shall have a durable epoxy-phenolic coating to provide protection in mildly corrosive coastal environments.
   b. Coating shall be applied to the aluminum fin stock prior to the fin stamping process to create an inert barrier between the aluminum fin and copper tube.
   c. Epoxy-phenolic barrier shall minimize galvanic action between dissimilar metals.
3. Optional copper-fin evaporator and condenser coils on all models.
   a. Shall be constructed of copper fins mechanically bonded to copper tubes and copper tube sheets.
   b. Galvanized steel tube sheets shall not be acceptable.
   c. A polymer strip shall prevent coil assembly from contacting the sheet metal coil pan to minimize potential for galvanic corrosion between coil and pan.

4. Optional E-coated aluminum-fin evaporator and condenser coils: on all models.
   a. Shall have a flexible epoxy polymer coating uniformly applied to all coil surface areas without material bridging between fins.
   b. Coating process shall ensure complete coil encapsulation of tubes, fins and headers.
   c. Color shall be high gloss black with gloss per ASTM D523-89.
   d. Uniform dry film thickness from 0.8 to 1.2 mil on all surface areas including fin edges.
   e. Superior hardness characteristics of 2H per ASTM D3363-92A and cross-hatch adhesion of 4B-5B per ASTM D3359-93.
   f. Impact resistance shall be up to 160 in.-lb (ASTM D2794-93).
   g. Humidity and water immersion resistance shall be up to minimum 1000 and 250 hours respectively (ASTM D2247-92 and ASTM D870-92).
   h. Corrosion durability shall be confirmed through testing to be no less than 1000 hours salt spray per ASTM B117-90.

I. (23 81 19.13.I.) Refrigerant components
   1. Refrigerant circuit shall include the following control, safety, and maintenance features:
      a. Thermostatic Expansion Valve (TXV) shall help provide optimum performance across the entire operating range. Shall contain removable power element to allow change out of power element and bulb without removing the valve body.
      b. High capacity refrigerant filter drier on each refrigerant circuit.
      c. Service gauge connections on suction and discharge lines.
      d. Pressure gauge access through a specially designed screen on the side of the unit.
      e. Precision-sized suction line accumulator on each refrigerant circuit shall protect from oil being removed from the scroll compressor rotating orbiter and plate during the activation of the defrost mode and switching back and forth from cooling and heating operations.
   2. Compressors
      a. Unit shall use fully hermetic, scroll compressor for each independent refrigeration circuit.
      b. Models shall be available with 2 compressor/2-stage cooling.
      c. Compressor motors shall be cooled by refrigerant gas passing through motor windings.
      d. Compressors shall be internally protected from high discharge temperature conditions.
      e. Compressors shall be protected from an over-temperature and over-amperage conditions by an internal, motor overload device.
      f. Compressor shall be factory mounted on rubber grommets.
      g. Compressor motors shall have internal line break thermal, current overload and high pressure differential protection.
      h. Crankcase heaters shall not be required for normal operating range, unless provided by the factory.

J. (23 81 19.13.J.) Filter section
   1. Filters access is specified in the unit cabinet section of this specification.
   2. Filters shall be held in place by a preformed, slide-out filter tray, facilitating easy removal and installation.
   3. Shall consist of factory-installed, low velocity, throw-away 2-in. thick fiberglass filters.
   4. Filters shall be standard, commercially available sizes.
   5. Only one size filter per unit is allowed.
   6. 4-in. filter capability is possible with a field-installed pre-engineered slide out filter track accessory. 4-in. filters are field-furnished.

K. (23 81 19.13.K.) Evaporator fan and motor
   1. Evaporator fan motor:
      a. Shall have inherent automatic-reset thermal overload protection or circuit breaker.
      b. Shall have a maximum continuous bhp rating for continuous duty operation; no safety factors above that rating shall be required.
   2. Belt-driven evaporator fan:
      a. Belt drive shall include an adjustable-pitch motor pulley and belt break protection system.
      b. Shall use rigid pillow block bearing system with lubricant fittings at accessible bearing or lubrication line.
      c. Blower fan shall be double-inlet type with forward-curved blades.
      d. Shall be constructed from steel with a corrosion resistance finish and dynamically balanced.

L. (23 81 19.13.L.) Condenser Fans and Motors.
   1. Condenser fan motors:
      a. Shall be a totally enclosed motor.
      b. Shall use permanently lubricated bearings.
      c. Shall have inherent thermal overload protection with an automatic reset feature.
      d. Shall use a shaft-down design.

2. Condenser fans:
   a. Shall be a direct-driven propeller type fan.
   b. Shall have aluminum blades riveted to corrosion-resistant steel spiders and shall be dynamically balanced.

M. (23 81 19.13.M.) Special features, options and accessories
1. Staged Air Volume System (SAV™) for 2-stage cooling models only:
   a. Evaporator fan motor:
      1) Shall have permanently lubricated bearings.
      2) Shall have a maximum continuous bhp rating for continuous duty operation; no safety factors above that rating.
      3) Shall be Variable Frequency duty and 2-speed control.
      4) Shall contain motor shaft grounding ring to prevent electrical bearing fluting damage by safely diverting harmful shaft voltages and bearing currents to ground.
   b. Variable frequency drive (VFD). Only available on 2-speed indoor fan motor option (SAV):
      1) Shall be installed inside the unit cabinet, mounted, wired and tested.
      2) Shall contain Electromagnetic Interference (EMI) frequency protection.
      3) Insulated Gate Bi-polar Transistors (IGBT) used to produce the output pulse width modulated (PWM) waveform, allowing for quiet motor operation.
      4) Self diagnostics with fault and power code LED indicator. Field accessory Display Kit available for further diagnostics and special setup applications.
      5) RS485 capability standard.
      6) Electronic thermal overload protection.
      7) 5% swinging chokes for harmonic reduction and improved power factor.
      8) All printed circuit boards shall be conformal coated.
2. Standard Integrated Economizers:
   a. Integrated, gear driven parallel modulating blade design type capable of simultaneous economizer and compressor operation.
   b. Independent modules for vertical or horizontal return configurations shall be available. Vertical and horizontal return modules shall be available as a factory-installed option.
   c. Damper blades shall be galvanized steel with composite gears. Plastic or composite blades on intake or return shall not be acceptable.
   d. Shall include all hardware and controls to provide free cooling with outdoor air when temperature and/or humidity are below set points.
   e. Shall be equipped with gear driven dampers for both the outdoor ventilation air and the return air for positive air stream control.
   f. Standard models shall be equipped with low-leakage dampers, not to exceed 2% leakage at 1 in. wg pressure differential. Economizer controller on electromechanical units shall be Honeywell W7212 that provides:
      1) Combined minimum and DCV maximum damper position potentiometers with compressor staging relay.
      2) Functions with solid state analog enthalpy or dry bulb changeover control sensing.
      3) Contain LED indicates for:
         A) When free cooling is available
         B) When module is in DCV mode
         C) When exhaust fan contact is closed.
   g. Ultra-low leak EconoMi$er X system shall be available on models with SAV 2-speed Variable Frequency Drive (VFD) systems. Only available on 2-speed indoor fan motor systems with electromechanical controls or RTU Open.
      1) Maximum damper leakage rate to be equal to or less than 4.0 cfm/sq ft at 1.0 in. wg, meeting or exceeding ASHRAE 90.1-2016 and IECC-2015 requirements. Economizer controller on electromechanical units shall be Honeywell W7220 that provides:
      2) 2-line LCD interface screen for setup, configuration and troubleshooting
      3) On-board fault detection and diagnostics
      4) Sensor failure loss of communication identification
      5) Automatic sensor detection
      6) Capabilities for use with multiple-speed indoor fan systems
      7) Utilize digital sensors: Dry bulb and Enthalpy
   h. Shall be capable of introducing up to 100% outdoor air.
   i. Shall be equipped with a barometric relief damper capable of relieving up to 100% return air.
   j. Shall be designed to close damper(s) during loss-of-power situations with spring return built into motor.
   k. Dry bulb outdoor air temperature sensor shall be provided as standard. Outdoor air sensor set point shall be adjustable and shall range from 40 to 100°F (4 to 38°C). Additional sensor options shall be available as accessories.
   l. The economizer controller shall also provide control of an accessory power exhaust unit

function. Factory set at 100%, with a range of 0% to 100%.

m. The economizer shall maintain minimum airflow into the building during occupied period and provide design ventilation rate for full occupancy. A remote potentiometer may be used to override the damper set point.

n. Dampers shall be completely closed when the unit is in the unoccupied mode.

o. Economizer controller shall accept a 2-10 Vdc CO_2 sensor input for IAQ/DCV control. In this mode, dampers shall modulate the outdoor air damper to provide ventilation based on the sensor input.

p. Compressor lockout sensor shall open at 35°F (2°C) and close closes at 50°F (10°C).

q. Actuator shall be direct coupled to economizer gear. No linkage arms or control rods shall be acceptable.

r. Economizer controller shall provide indications when in free cooling mode, in the DCV mode, or the exhaust fan contact is closed.

3. Two-Position Damper:

a. Damper shall be a 2-position damper. Damper travel shall be from the full closed position to the field adjustable %-open set point.

b. Damper shall include adjustable damper travel from 25% to 100% (full open).

c. Damper shall include single or dual blade, gear driven dampers and actuator motor.

d. Actuator shall be direct coupled to damper gear. No linkage arms or control rods shall be acceptable.

e. Damper will admit up to 100% outdoor air for applicable rooftop units.

f. Damper shall close upon indoor (evaporator) fan shutoff and/or loss of power.

g. The damper actuator shall plug into the rooftop unit's wiring harness plug. No hard wiring shall be required.

h. Outside air hood shall include aluminum water entrainment filter.

i. Not available with Staged Air Volume (SAV™) models.

4. Manual damper:

a. Manual damper package shall consist of damper, air inlet screen, and rain hood which can be preset to admit up to 25% outdoor air for year round ventilation.

b. Not available with Staged Air Volume (SAV™) models.

5. Head pressure control package:

a. Controller shall control coil head pressure by condenser-fan speed modulation or condenser-fan cycling and wind baffles.

b. Shall consist of solid-state control and condenser-coil temperature sensor to maintain condensing temperature between 90°F (32°C) and 110°F (43°C) at outdoor ambient temperatures down to –20°F (–29°C).

6. Condenser coil hail guard assembly:

a. Shall protect against damage from hail.

b. Shall be louvered style design.

7. Unit-mounted, non-fused disconnect switch:

a. Switch shall be factory-installed, internally mounted.

b. National Electric Code (NEC) and UL approved non-fused switch shall provide unit power shutoff.

c. Shall be accessible from outside the unit.

d. Shall provide local shutdown and lockout capability.

8. Convenience outlet:

a. Powered convenience outlet.

1) Outlet shall be powered from main line power to the rooftop unit.
2) Outlet shall be powered from line side of disconnect by installing contractor, as required by code. If outlet is powered from load side of disconnect, unit electrical ratings shall be ETL certified and rated for additional outlet amperage.
3) Outlet shall be factory-installed and internally mounted with easily accessible 115-v female receptacle.
4) Outlet shall include 15 amp GFI receptacles with independent fuse protection.
5) Voltage required to operate convenience outlet shall be provided by a factory-installed step-down transformer.
6) Outlet shall be accessible from outside the unit.
7) Outlet shall include a field-installed "Wet in Use" cover.

b. Factory-installed non-powered convenience outlet.

1) Outlet shall be powered from a separate 115/120v power source.
2) A transformer shall not be included.
3) Outlet shall be factory-installed and internally mounted with easily accessible 115-v female receptacle.
4) Outlet shall include 15 amp GFI receptacles with independent fuse protection.
5) Outlet shall be accessible from outside the unit.
6) Outlet shall include a field-installed "Wet in Use" cover.

c. Field-Installed Non-powered convenience outlet.

1) Outlet shall be powered from a separate 115-120v power source.

2) A transformer shall not be included.
3) Outlet shall be factory-installed and internally mounted with easily accessible 115-v female receptacle.
4) Outlet shall include 20 amp GFI receptacles. This kit provides a flexible installation method which allows code compliance for height requirements of the GFCI outlet from the finished roof surface as well as the capability to relocate the outlet to a more convenient location.
5) Outlet shall be accessible from outside the unit.
6) Outlet shall include a field-installed "Wet in Use" cover.

d. Fan/filter status switch:
1) Switch shall provide status of indoor evaporator fan (ON/OFF) or filter (CLEAN/DIRTY).
2) Status shall be displayed either over communication bus (when used with direct digital controls) or with an indicator light at the thermostat.

9. Centrifugal power exhaust:
a. Power exhaust shall be used in conjunction with an integrated economizer.
b. Independent modules for vertical or horizontal return configurations shall be available.
c. Horizontal power exhaust shall be mounted in return ductwork.
d. Power exhaust shall be controlled by economizer controller operation. Exhaust fans shall be energized when dampers open past the 0-100% adjustable set point on the economizer control.

10. Roof Curbs (Vertical):
a. Full perimeter roof curb with exhaust capability providing separate air streams for energy recovery from the exhaust air without supply air contamination.
b. Formed galvanized steel with wood nailer strip and shall be capable of supporting entire unit weight.
c. Permits installation and securing of ductwork to curb prior to mounting unit on the curb.

11. Adapter Curb (Vertical):
a. Full perimeter, fully assembled and welded roof curb with exhaust capability providing separate air streams for energy recovery from the exhaust air without supply air contamination.
b. Formed galvanized steel with wood nailer strip and shall be capable of supporting entire unit weight.
c. Permits installation of new 50TCQD17-24 models to past Carrier design curb models: DP, DR, HJ, TM, and TJ. Check with Carrier sales expert of further details and information.

12. High-static indoor fan motor(s) and drive(s):
a. High static motor(s) and drive(s) shall be factory-installed to provide additional performance range.

13. Outdoor air enthalpy sensor:
a. The outdoor air enthalpy sensor shall be used to provide single enthalpy control. When used in conjunction with a return air enthalpy sensor, the unit will provide differential enthalpy control. The sensor allows the unit to determine if outside air is suitable for free cooling.

14. Return air enthalpy sensor:
a. The return air enthalpy sensor shall be used in conjunction with an outdoor air enthalpy sensor to provide differential enthalpy control.

15. Indoor air quality (CO_2) sensor:
a. Shall be able to provide demand ventilation indoor air quality (IAQ) control.
b. The IAQ sensor shall be available in duct mount, wall mount, or wall mount with LED display. The setpoint shall have adjustment capability.

16. Smoke detectors:
a. Shall be a four-wire controller and detector.
b. Shall be environmental compensated with differential sensing for reliable, stable, and drift-free sensitivity.
c. Shall use magnet-activated test/reset sensor switches.
d. Shall have tool-less connection terminal access.
e. Shall have a recessed momentary switch for testing and resetting the detector.
f. Controller shall include:
1) One set of normally open alarm initiation contacts for connection to an initiating device circuit on a fire alarm control panel.
2) Two Form-C auxiliary alarm relays for interface with rooftop unit or other equipment.
3) One Form-C supervision (trouble) relay to control the operation of the Trouble LED on a remote test/reset station.
4) Capable of direct connection to two individual detector modules.
5) Can be wired to up to 14 other duct smoke detectors for multiple fan shutdown applications.

17. Time guard:
    a. Shall prevent compressor short cycling by providing a 5-minute delay (±2 minutes) before restarting a compressor after shutdown for any reason.
    b. One device shall be required per compressor.
18. Barometric hood (horizontal economizer applications)
    a. Shall be required when a horizontal economizer and barometric relief are required. Barometric relief damper must be installed in the return air (horizontal) duct work. This hood provides weather protection.
19. Electric heat:
    a. Heating section
        1) Heater element open coil resistance wire, nickel-chrome alloy, 0.29 inches inside diameter, strung through ceramic insulators mounted on metal frame. Coil ends are staked and welded to terminal screw slots.
        2) Heater assemblies are provided with integral fusing for protection of internal heater circuits not exceeding 48 amps each. Auto reset thermo limit controls, magnetic heater contactors (24 v coil) and terminal block all mounted in electric heater control box (minimum 18 ga galvanized steel) attached to end of heater assembly.
20. Hinged access panels:
    a. Shall provide easy access through integrated quarter turn latches.
    b. Shall be on major panels of: filter, control box, fan motor and compressor.
21. Display kit for variable frequency drive (VFD):
    a. Kit allows the ability to access the VFD controller programs to provide special setup capabilities and diagnostics.
    b. Kit contains display module, mounting bracket and communication cable.
    c. Display kit can be permanently installed in the unit or used on any SAV™ system VFD controller as needed.
22. Condensate Overflow Switch (for units with electro-mechanical controls and RTU Open controller only):
    a. This sensor and related controller monitors the condensate level in the drain pan and shuts down compression operation when overflow conditions occur. It includes:
        1) Indicator light — solid red (more than 10 seconds on water contact — compressors disabled), blinking red (sensor disconnected)
        2) 10 second delay to break — eliminates nuisance trips from splashing or waves in pan (sensor needs 10 seconds of constant water contact before tripping)
        3) Disables the compressor(s) operation when condensate plug is detected, but still allows fans to run for economizer.
23. Horn/Strobe Annunciator:
    a. Provides an audible/visual signaling device for use with factory-installed option of field-installed accessory smoke detectors.
        1) Requires installation of a field-supplied 24-v transformer suitable for 4.2 VA (AC) or 3.0 VA (DC) per horn/strobe accessory.
        2) (Requires field-supplied electrical box, North American 1-gang box, 2-in. (51 mm) x 4-in. (102 mm).
        3) Shall have a clear colored lens.