Start-Up, Operation, and Maintenance Instructions

CONTENTS

Page
SAFETY CONSIDERATIONS 2
INTRODUCTION 4
ABBREVIATIONS AND EXPLANATIONS 5
CHILLER FAMILIARIZATION 5
Chiller Information Nameplate 5
System Components 5
Evaporator 5
Condenser 5
Economizer Option 5
Motor-Compressor 11
Variable Frequency Drive (VFD) 11
Chiller Power Panel 11
PIC6 Touch Screen HMI 11
Magnetic Bearing Controller (MBC) 11
UPS (Magnetic Bearing Only) 11
Expansion Control System 11
REFRIGERATION CYCLE 12
Motor Cooling System 15
19MV3 OILED LUBRICATION CYCLE 16
Summary 16
Details 16
Bearings 16
Oil Reclaim System 16
Lubrication Control 17
Oil Charge 17
Power Up Controls and Check Oil Heater 17
VFD 18
CONTROLS 20
Definitions 20
General 20
PIC6 System Components 20
START-UP/SHUTDOWN/RECYCLE SEQUENCE . . . 20
Local Start/Stop Control 20
Shutdown 22
BEFORE INITIAL START-UP 23
Job Data Required 23
Equipment Required 23
Remove Shipping Packaging 23
Tighten All Gasketed Joints 23
Check Chiller Tightness 24
Leak Test Chiller 26
Standing Vacuum Test 28
Check the Installation 28
Inspect Wiring 28
Chiller Dehydration 29
Inspect Water Piping 29
Check Safety Valves 29
Ground Fault Troubleshooting 29
Carrier Comfort Network Interface 30
Charge Refrigerant into Chiller 30
Software Configuration 30
Perform MBC Calibration and Clearance Checks . . 31
Check Motor Cooling Valves 31
EXV Strainer Refrigerant Isolation Valves 31
Compressor Discharge Isolation Valve
(19MVR Units) 31
UPS 31
Refrigerant Tracer 31
Field Set Up and Verification 34
Perform a Controls Test (Quick Test) 35
INITIAL START-UP 36
Preparation 36
Check Motor Rotation 38
To Prevent Accidental Start-Up 38
Check Chiller Operating Condition 38
Instruct the Customer Operator(s) 38
OPERATING INSTRUCTIONS 38
Operator Duties 38
Prepare the Chiller for Start-Up 38
To Start the Chiller 38
Check the Running System 38
To Stop the Chiller 39
After Limited Shutdown 39
Preparation for Extended Shutdown 39
After Extended Shutdown 39
Cold Weather Operation 39
Manual Guide Vane Operation 39
Refrigeration and Service Log 39
PUMPOUT AND REFRIGERANT
TRANSFER PROCEDURES 40
Preparation 40
Operating the Optional Pumpout Unit 40
GENERAL MAINTENANCE 43
Refrigerant Properties 43
Adding Refrigerant 43
Adjusting the Refrigerant Charge 43
Refrigerant Leak Testing 43
Leak Rate 43
Test After Service, Repair, or Major Leak 43
Repair Leaks, Retest, Standing Vacuum Test 43
Checking Guide Vanes 44

Manufacturer reserves the right to discontinue, or change at any time, specifications or designs without notice and without incurring obligations.

Trim Refrigerant Charge 45
SCHEDULED MAINTENANCE 45
Run Times 45
Inspect the Power Panel 45
Changing Refrigerant Filters 45
Inspect Safety Relief Devices and Piping 45
Compressor Bearing Maintenance 46
Compressor Bearing Maintenance (19MVR) 47
Inspect Heat Exchanger Tubes and Flow Devices . . 47
Water Leaks 47
Water Treatment 47
Inspect the VFD 47
Recalibrate Pressure Transducers 48
Recalibrate Temperature Thermistors 48
Ordering Replacement Chiller Parts 48
Lubrication System Weekly Maintenance 48
TROUBLESHOOTING GUIDE 49
Overview 49
Checking Display Messages 49
Checking Temperature Sensors 49
Checking Pressure Transducers 52
Condenser Level 53
High Altitude Locations 53
Quick Test and 19MV Quick Test 53
Quick Calibration 53
End of Life and Equipment Disposal 53
Physical Data 53
APPENDIX A — CCN COMMUNICATION WIRING FOR MULTIPLE CHILLERS (TYPICAL) 59
APPENDIX B — MAINTENANCE SUMMARY AND LOG SHEETS 60
APPENDIX C — REMOTE CONNECTIVITY SETUP (BY CARRIER SERVICE) 61
APPENDIX D — A2L REFRIGERANT MAINTENANCE SUPPLEMENT 63
EQUIPMENT DECOMMISSIONING 80
INITIAL START-UP CHECKLIST CL-1

SAFETY CONSIDERATIONS

Installation and servicing of air-conditioning equipment can be hazardous due to system pressure and electrical components. Only trained and qualified service personnel should install, repair, or service air-conditioning equipment.

Untrained personnel can perform basic maintenance functions of cleaning coils and filters and replacing filters. All other operations should be performed by trained service personnel. When working on air-conditioning equipment, observe precautions in the literature, tags and labels attached to the unit, and other safety precautions that may apply.

Follow all safety codes. Wear safety glasses and work gloves. Use quenching cloth for unbrazing operations. Have fire extinguisher available for all brazing operations.

It is important to recognize safety information. This is the safety-alert symbol ⚠. When you see this symbol on the unit and in instructions or manuals, be alert to the potential for personal injury.

Understand the signal words DANGER, WARNING, CAUTION, and NOTE. These words are used with the safety-alert symbol. DANGER identifies the most serious hazards which **will** result in severe personal injury or death. WARNING signifies hazards which **could** result in personal injury or death. CAUTION is used to identify unsafe practices, which **may** result in minor personal injury or product and property damage. NOTE is used to highlight suggestions which **will** result in enhanced installation, reliability, or operation.

Centrifugal liquid chillers are designed to provide safe and reliable service when operated within design specifications. When operating this equipment, use good judgment and safety precautions to avoid damage to equipment and property or injury to personnel.

⚠ DANGER

Failure to follow these procedures will result in severe personal injury or death.

DO NOT VENT refrigerant relief valves within a building. Outlet from rupture disc or relief valve must be vented outdoors in accordance with the latest edition of ANSI/ASHRAE 15 (American National Standards Institute/American Society of Heating, Refrigerating, and Air-Conditioning Engineers). The accumulation of refrigerant in an enclosed space can displace oxygen and cause asphyxiation.

PROVIDE adequate ventilation in accordance with ANSI/ASHRAE 15, especially for enclosed and low overhead spaces. Inhalation of high concentrations of vapor is harmful and may cause heart irregularities, unconsciousness, or death. Misuse can be fatal. Vapor is heavier than air and reduces the amount of oxygen available for breathing. Product causes eye and skin irritation. Decomposition products are hazardous.

DO NOT USE OXYGEN to purge lines or to pressurize a chiller for any purpose. Oxygen gas reacts violently with oil, grease, and other common substances.

NEVER EXCEED specified test pressures; VERIFY the allowable test pressure by checking the instruction literature and the design pressures on the equipment nameplate.

DO NOT USE air for leak testing. Use only refrigerant or dry nitrogen.

DO NOT VALVE OFF any safety device.

BE SURE that all pressure relief devices are properly installed and functioning before operating any chiller.

RISK OF INJURY OR DEATH by electrocution. High voltage can be present on motor leads even though the motor is not running. Open the power supply disconnect before touching motor leads or terminals.

⚠ WARNING

DO NOT USE TORCH to remove any component. System contains oil and refrigerant under pressure.

To remove a component, wear protective gloves and goggles and proceed as follows:

a. Shut off electrical power to unit.
b. Recover refrigerant to relieve all pressure from system using both high-pressure and low pressure ports.
c. Traces of vapor should be displaced with nitrogen and the work area should be well ventilated. Refrigerant in contact with an open flame produces toxic gases.
d. Cut component connection tubing with tubing cutter and remove component from unit. Use a pan to catch any oil that may come out of the lines and as a gauge for how much oil to add to the system.
e. Carefully un-sweat remaining tubing stubs when necessary. Oil can ignite when exposed to torch flame.

Failure to follow these procedures may result in personal injury or death.

(Warnings continued on next page.)

⚠ WARNING

Failure to follow these procedures may result in personal injury or death.

DO NOT USE eyebolts or eyebolt holes to rig chiller sections or the entire assembly.

DO NOT work on high-voltage equipment unless you are a qualified electrician.

DO NOT WORK ON electrical components, including control panels, switches, or starters, until you are sure ALL POWER IS OFF and no residual voltage can leak from capacitors or solid-state components.

LOCK OPEN AND TAG electrical circuits during servicing. IF WORK IS INTERRUPTED, confirm that all circuits are deenergized before resuming work.

AVOID SPILLING liquid refrigerant on skin or getting it into the eyes. USE SAFETY GOGGLES. Wash any spills from the skin with soap and water. If liquid refrigerant enters the eyes, IMMEDIATELY FLUSH EYES with water and consult a physician.

NEVER APPLY an open flame or live steam to a refrigerant cylinder. Dangerous overpressure can result. When it is necessary to heat refrigerant, use only warm (110°F [43°C]) water.

VERIFY that refrigerant storage cylinders are clean with no residual moisture, oil, or refrigerant that can contaminate the refrigerant charge.

DO NOT REUSE disposable (nonreturnable) cylinders or attempt to refill them. It is DANGEROUS AND ILLEGAL. When cylinder is emptied, evacuate remaining gas pressure, loosen the collar, and unscrew and discard the valve stem. DO NOT INCINERATE.

CHECK THE REFRIGERANT TYPE before adding refrigerant to the chiller. The introduction of the wrong refrigerant can cause damage or malfunction to this chiller.

Operation of this equipment with refrigerants other than those cited herein should comply with ANSI/ASHRAE 15 (latest edition) and the mechanical room should meet or exceed the current ASHRAE Guidelines for the refrigerant type used in the chiller. Contact Carrier for further information on use of this chiller with other refrigerants.

DO NOT ATTEMPT TO REMOVE fittings, covers, etc., while chiller is refrigerant charged or at any time while chiller is running. Be sure pressure is at 0 psig (0 kPa) before breaking any refrigerant connection. Note that chiller will be in a vacuum condition when temperature is below normal room temperature.

CAREFULLY INSPECT all rupture discs and other relief devices AT LEAST ONCE A YEAR. If chiller operates in a corrosive atmosphere, inspect the devices at more frequent intervals.

DO NOT ATTEMPT TO REPAIR OR RECONDITION any relief device when corrosion or build-up of foreign material (rust, dirt, scale, etc.) is found within the valve body or mechanism. Replace the device.

DO NOT install relief devices in series or backwards.

USE CARE when working near or in line with a compressed spring. Sudden release of the spring can cause it and objects in its path to act as projectiles.

USE CARE when working near energized motor. PM motors produce strong electromagnetic fields which can be harmful to those with pacemakers or metallic medical implants.

⚠ WARNING

MAGNETIC FIELD HAZARD

Units equipped with the permanent magnet motor option contain rotors with powerful magnetic fields. Permanent magnet motor rotors, when removed from the stator, expose surrounding personnel and equipment to powerful magnetic fields which may cause serious health hazards to persons with pacemakers or defibrillators, hearing aids, metal implants, or other implanted electronic medical devices, and may impact other electronic devices such as mobile phones or smartwatches, watches, credit cards, etc. Persons in a risk group should consult a physician prior to compressor disassembly. Failure to follow these procedures may result in personal injury or death.

⚠ WARNING

The magnetic bearings have UPS power supply that provides control power. Before service or repair work starts disconnect the UPS and verify with voltage meter that there is no power present.

⚠ WARNING

Rotation of the shaft can generate voltage potential at the motor terminals. If the shaft is to be rotated the motor terminals should be grounded.

⚠ CAUTION

Failure to follow these procedures may result in personal injury or damage to equipment.

DO NOT STEP on refrigerant lines. Broken lines can whip about and release refrigerant, causing personal injury.

DO NOT climb over a chiller. Use platform, catwalk, or staging. Follow safe practices when using ladders.

USE MECHANICAL EQUIPMENT (crane, hoist, etc.) to lift or move inspection covers or other heavy components. Even if components are light, use mechanical equipment when there is a risk of slipping or losing your balance.

BE AWARE that certain automatic start arrangements CAN ENGAGE THE STARTER, TOWER FAN, OR PUMPS. Open the disconnect *ahead of* the starter, tower fans, or pumps.

USE only repair or replacement parts that meet the code requirements of the original equipment.

DO NOT VENT OR DRAIN waterboxes containing industrial brines, liquid, gases, or semisolids without the permission of your process control group.

DO NOT LOOSEN waterbox cover bolts until the waterbox has been completely drained.

DO NOT LOOSEN a packing gland nut before checking that the nut has a positive thread engagement.

PERIODICALLY INSPECT all valves, fittings, and piping for corrosion, rust, leaks, or damage.

PROVIDE A DRAIN connection in the vent line near each pressure relief device to prevent a build-up of condensate or rain water.

DO NOT leave refrigerant system open to air any longer than the actual time required to service the equipment. Seal circuits being serviced and charge with dry nitrogen to prevent contamination when timely repairs cannot be completed.

IMPORTANT: The appliance is not to be used by person (including children) with reduced physical, sensory, or mental capabilities, or lack of experience and knowledge, unless they have been given supervision or instructions to do so.

INTRODUCTION

Prior to initial start-up of the 19MV unit, those involved in the start-up, operation, and maintenance should be thoroughly familiar with these instructions and other necessary job data. Procedures in this manual are arranged in the sequence required for proper chiller start-up and operation. This book also outlines the control system for those involved in the start-up and operation of the unit. It is intended to be used in combination with the 19MV Semi-Hermetic Centrifugal Liquid Chillers Controls Operation and Troubleshooting manual that describes the controls in detail. The maintenance section identifies the minimum maintenance requirements for this product including calibration/troubleshooting of various components.

⚠ CAUTION

Do NOT punch holes or drill into the top surface of the control or VFD enclosure for field wiring. Knockouts are provided for field wiring connections. Drilling holes through the top of the cabinet can result in a loss of warranty on the starter assembly because of metal particulate falling on and into electronic components.

⚠ CAUTION

PROVIDE MACHINE PROTECTION. Store machine and starter indoors, protected from construction dirt and moisture. Inspect under shipping tarps, bags, or crates to be sure water has not collected during transit. Keep protective shipping covers in place until machine is ready for installation. Follow latest Water-Cooled Chillers Long Term Storage document located in Chiller Builder Library.

⚠ CAUTION

This unit uses a microprocessor control system. Do not short or jumper between terminations on circuit boards or modules; control or board failure may result.

Be aware of electrostatic discharge (static electricity) when handling or making contact with circuit boards or module connections. Always touch a chassis (grounded) part to dissipate body electrostatic charge before working inside control center or use a grounding strap before handling printed circuit boards.

Use extreme care when handling tools near boards and when connecting or disconnecting terminal plugs. Circuit boards can easily be damaged. Always hold boards by the edges and avoid touching components and connections.

This equipment uses, and can radiate, radio frequency energy. If not installed and used in accordance with the instruction manual, it may cause interference to radio communications. The PIC6 control boards have been tested and found to comply with the limits for a Class A computing device pursuant to International Standard in North America EN 61000-2/3 which are designed to provide reasonable protection against such interference when operated in a commercial environment. Operation of this equipment in a residential area is likely to cause interference, in which case the user, at his own expense, will be required to take whatever measures may be required to correct the interference.

Always store and transport replacement or defective boards in anti-static shipping bag.

⚠ CAUTION

WHEN FLUSHING THE WATER SYSTEMS isolate the chiller from the water circuits to prevent damage to the heat exchanger tubes.

ABBREVIATIONS AND EXPLANATIONS

Factory-installed additional components are referred to as options in this manual; factory-supplied but field-installed additional components are referred to as accessories.

Frequently used abbreviations in this manual include:

AWG — American Wire Gauge
BMS — Building Management System
BPHX — Brazed Plate Heat Exchanger
CCN — Carrier Comfort Network®
DCIB — Digital Control Interface Board
DVM — Digital Volt-Ohmmeter
ECDW — Entering Condenser Water
ECW — Entering Chilled Water
EMS — Energy Management System
EXV — Electronic Expansion Valve
HMI — Human Machine Interface
HVIB — High Voltage Interface Board
I/O — Input/Output
ICP — Interstage Compressor Piping
IGBT — Insulated-Gate Bipolar Transistor
IGV — Inlet Guide Vane
IOB — Input Output Board
LCDW — Leaving Condenser Water
LCW — Leaving Chilled Water
LED — Light-Emitting Diode
MAWP — Maximum Allowable Working Pressure
MBC — Magnetic Bearing Controller
NSTV — Network Service Tool V
OLTA — Overload Trip Amps
PIC — Product Integrated Controls
PPE — Protective Personal Equipment
PWM — Pulse Width Modulating
RLA — Rated Load Amps
RMS — Root Mean Square
SCCR — Short Circuit Current Rating
SCR — Silicon Controlled Rectifier
SIOB — Starfire 2 Input Output Board
UPS — Uninterruptible Power Supply
VFD — Variable Frequency Drive
VPF — Variable Primary Flow

CHILLER FAMILIARIZATION

Chiller Information Nameplate

The information nameplate is located on the left side of the chiller power panel. See Fig. 1 for model number identification and Fig. 2-5 for typical compressor chiller components.

System Components

The main components include the evaporator and condenser heat exchangers in separate vessels, motor-compressor, refrigerant, refrigerant metering system, power panel, PIC6 Touch Screen HMI, economizer, VFD, UPS, and MBC.

Evaporator

This vessel is located underneath the compressor. The evaporator is maintained at a lower temperature/pressure so evaporating refrigerant can remove heat from water or brine flowing through its internal tubes. Water flows through the internal tubes to provide comfort or process cooling.

Condenser

The condenser operates at a higher temperature/pressure than the evaporator and has water flowing through its internal tubes in order to remove heat from the refrigerant. The condenser incorporates a sub-cooler to improve the unit operating efficiency.

Economizer Option

The 19MV system utilizes a BPHX to transfer heat from the main stream of liquid refrigerant to a smaller stream of refrigerant, which has been brought to an intermediate pressure by use of an EXV. The intermediate pressure refrigerant leaves the BPHX as a superheated vapor and flows into the second stage end of the compressor. The heat removed by the vaporized refrigerant in the economizer allows the liquid refrigerant in the evaporator to absorb more heat when it evaporates and benefits the overall cooling efficiency cycle. See Fig. 6 for economizer assembly details.

19 MV – 4 1 N 4 1 N 3 6 9 E 7 5 –

Description
19 — High Efficiency Semi-Hermetic Centrifugal Liquid Chiller

MV — Model Designation

Bearing Option
– — Magnetic Bearing
R — Roller Element Bearing

Evaporator Frame Size
1 — Frame 1
2 — Frame 2
3 — Frame 3
4 — Frame 4
5 — Frame 5

Evaporator Length
1 — 11 ft (3.4 m) Length
3 — 13 ft (4 m) Length

Evaporator Pass Arrangement and Tube Count
E — 3 pass, 3/4" tube, Lowest Tube Count
F — 3 pass, 3/4" tube, Medium Tube Count
G — 3 pass, 3/4" tube, Highest Tube Count
L — 1 or 2 pass, 3/4" tube, Lowest Tube Count
M — 1 or 2 pass, 3/4" tube, Medium Tube Count
N — 1 or 2 pass, 3/4" tube, Highest Tube Count

R — 3 pass, 1" tube, Lower-Medium Tube Count
S — 3 pass, 1" tube, Medium Tube Count
T — 3 pass, 1" tube, Medium-Higher Tube Count
X — 1 or 2 pass, 1" tube, Lowest Tube Count
Y — 1 or 2 pass, 1" tube, Medium Tube Count
Z — 1 or 2 pass, 1" tube, Highest Tube Count

Condenser Frame Size
1 — Frame 1
2 — Frame 2
3 — Frame 3
4 — Frame 4
5 — Frame 5

Condenser Length
1 — 11 ft (3.4 m) Length
3 — 13 ft (4 m) Length

Special Code
– — Standard
S — Special

Voltage Code

Code	Volts-Phase-Hertz
3 —	380-3-60
4 —	416-3-60
5 —	460-3-60
9 —	400-3-50

Motor Code
3 — Smallest HP
5 — Medium HP
7 — Large HP

Economizer Option
E — Economizer Included
N — No Economizer

Compressor Impeller Diameter Code
9

Compressor Shroud Code
3
4
5
6
7 (Frame 3 Only)
8 (Frame 3 Only)

Compressor Frame Size
2 — 150-350 Nominal Tons (527-1,230 kW)
3 — 300-700 Nominal Tons (1,055-2,462 kW)

Condenser Pass Arrangement and Tube Count
C — 3 pass, 3/4" tube, Lowest Tube Count
D — 3 pass, 3/4" tube, 2nd Lowest Tube Count
F — 3 pass, 3/4" tube, 2nd Highest Tube Count
G — 3 pass, 3/4" tube, Highest Tube Count
K — 1 or 2 pass, 3/4" tube, Lowest Tube Count
L — 1 or 2 pass, 3/4" tube, 2nd Lowest Tube Count
M — 1 or 2 pass, 3/4" tube, 2nd Highest Tube Count
N — 1 or 2 pass, 3/4" tube, Highest Tube Count
P — 1 or 2 pass, 3/4" tube, Highest Tube Count (Condenser Frame 2 only)

Fig. 1 — 19MV Chiller Model Number Identification

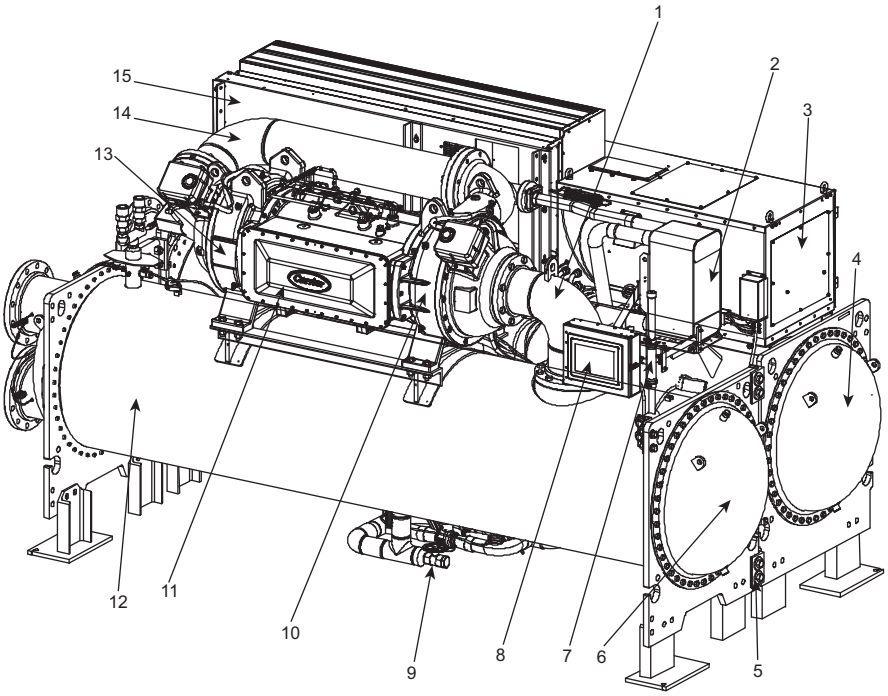

LEGEND
1 — Suction Elbow First Stage
2 — Refrigerant Economizer
3 — Integrated Power and Control Panel
4 — Condenser Waterbox Return End
5 — Bolt Together Plate
6 — Evaporator Waterbox Return End
7 — HMI Adjustment Arm
8 — 10.4 in. Color Touchscreen Display
9 — Refrigerant Charging Valve
10 — EquiDrive* Two-Stage Back-to-Back Centrifugal Compressor
11 — Permanent Magnet Motor (hidden)
12 — Evaporator
13 — Magnetic Bearing System
14 — Interstage Compressor Piping
15 — VFD (Variable Frequency Drive)

* Third-party trademarks and logos are property of their respective owners.

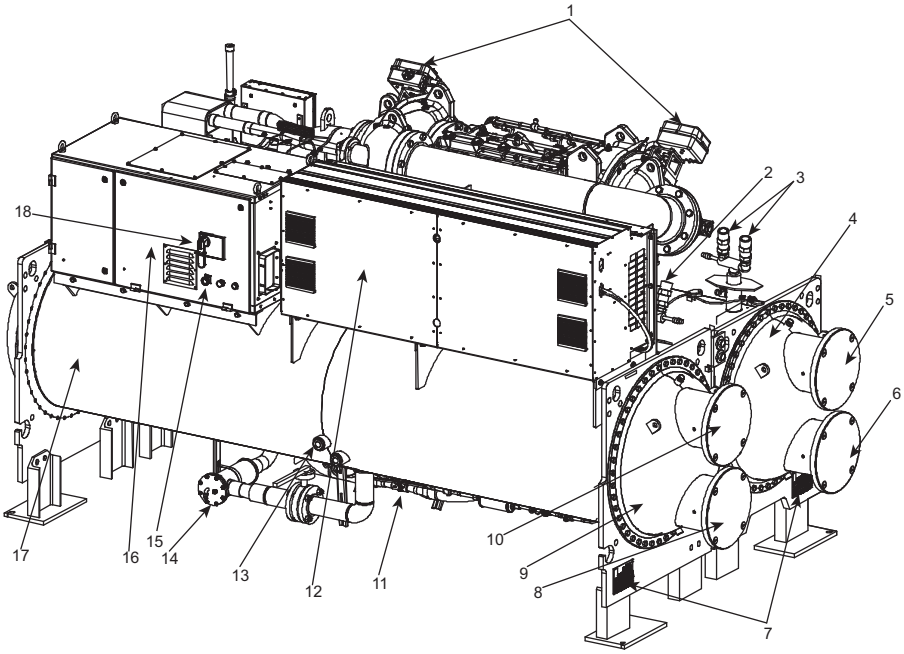

LEGEND
1 — Dual Inlet Guide Vane Actuators
2 — Condenser Dual Relief Valves
3 — Evaporator Dual Relief Valves
4 — Evaporator Waterbox
5 — Leaving Evaporator Nozzle
6 — Entering Evaporator Nozzle
7 — ASME Nameplates
8 — Entering Condenser Nozzle
9 — Condenser Waterbox
10 — Leaving Condenser Nozzle
11 — Dual Electronic Expansion Valves
12 — VFD (Variable Frequency Drive)
13 — Condenser Sight Glasses
14 — Strainer
15 — E-stop
16 — Integrated Power and Control Panel
17 — Condenser
18 — Main Circuit Breaker

Fig. 2 — Typical 19MV3 Compressor Chiller Components, Standard Tier, Magnetic Bearing Option

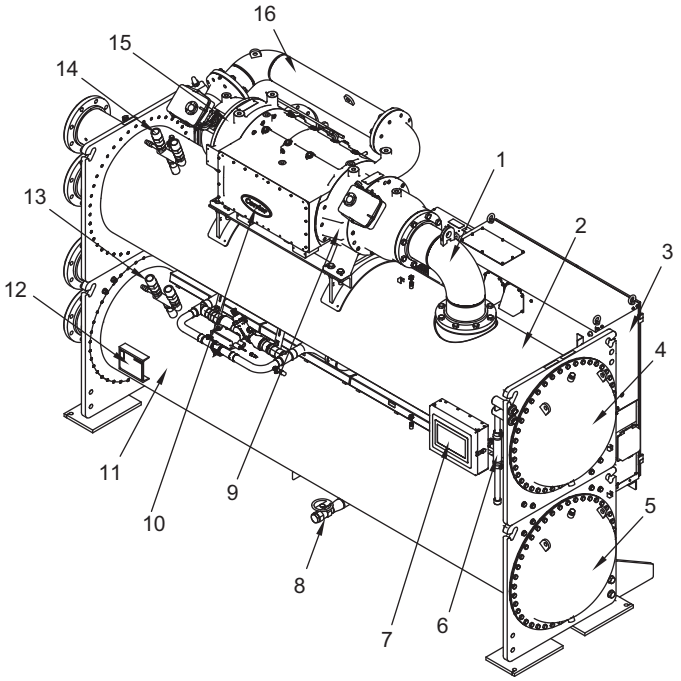

LEGEND

1 — Suction Elbow First Stage
2 — Evaporator
3 — Integrated Power and Control Panel
4 — Condenser Waterbox Return End
5 — Evaporator Waterbox Return End
6 — HMI Adjustment Arm
7 — 10.4 in. Color Touchscreen Display
8 — Refrigerant Charging Valve
9 — EquiDrive Two-stage Back-to-Back Centrifugal Compressor
10 — Permanent Magnet Motor (hidden)
11 — Condenser
12 — ASME Nameplate
13 — Condenser Dual Relief Valves
14 — Evaporator Dual Relief Valves
15 — Magnetic Bearing System
16 — Interstage Compressor Piping

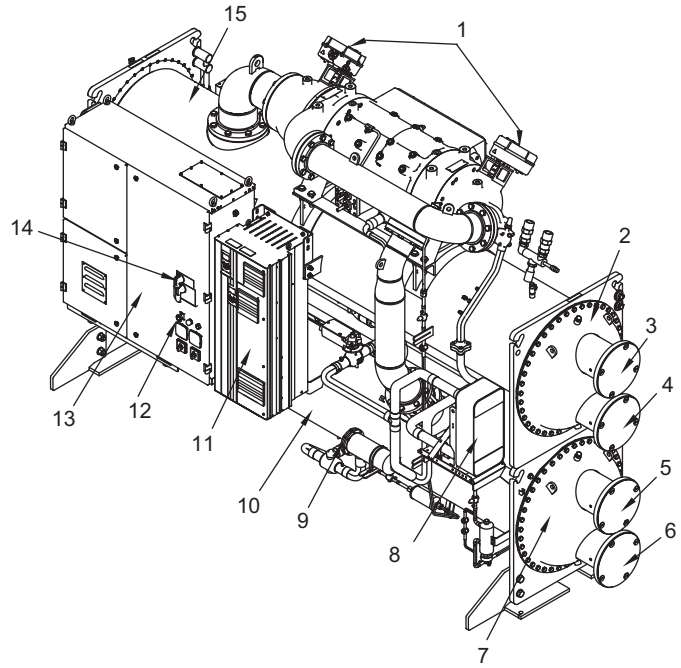

LEGEND

1 — Dual Inlet Guide Vane Actuators
2 — Evaporator Waterbox
3 — Leaving Evaporator Nozzle
4 — Entering Evaporator Nozzle
5 — Leaving Condenser Nozzle
6 — Entering Condenser Nozzle
7 — Condenser Waterbox
8 — Refrigerant Economizer
9 — Strainer
10 — Condenser
11 — VFD (Variable Frequency Drive)
12 — E-stop
13 — Integrated Power and Control Panel
14 — Main Circuit Breaker
15 — Evaporator

Fig. 3 — Typical 19MV2 Compressor Chiller Components, Standard Tier, Magnetic Bearing Option

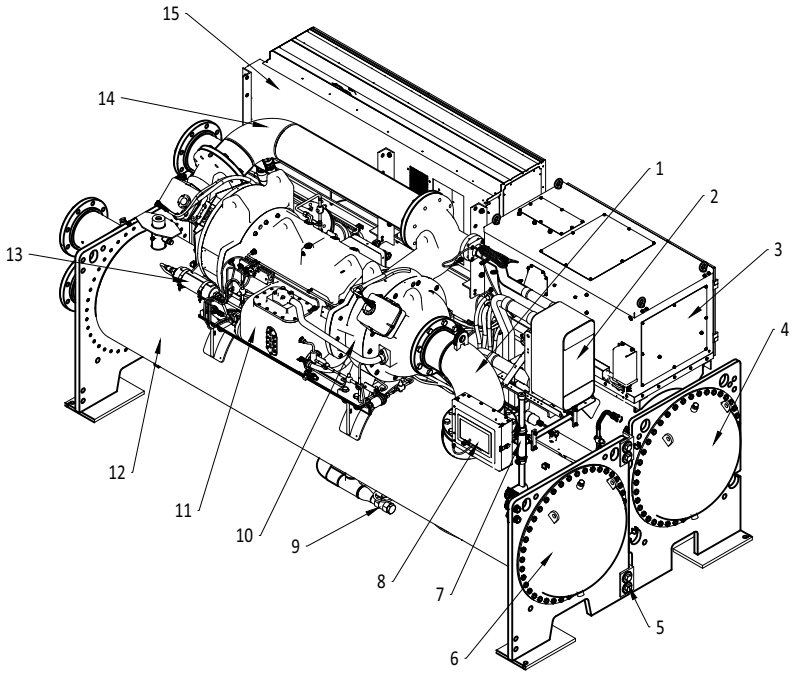

LEGEND
1 — Suction Elbow First Stage
2 — Refrigerant Economizer
3 — Integrated Power and Control Panel
4 — Condenser Waterbox Return End
5 — Bolt Together Plate
6 — Evaporator Waterbox Return End
7 — HMI Adjustment Arm
8 — 10.4 in. Color Touchscreen Display
9 — Refrigerant Charging Valve
10 — EquiDrive* Two-Stage Back-to-Back Centrifugal Compressor
11 — Permanent Magnet Motor (hidden)
12 — Evaporator
13 — Oil Bearing System
14 — Interstage Compressor Piping
15 — VFD (Variable Frequency Drive)

* Third-party trademarks and logos are property of their respective owners.

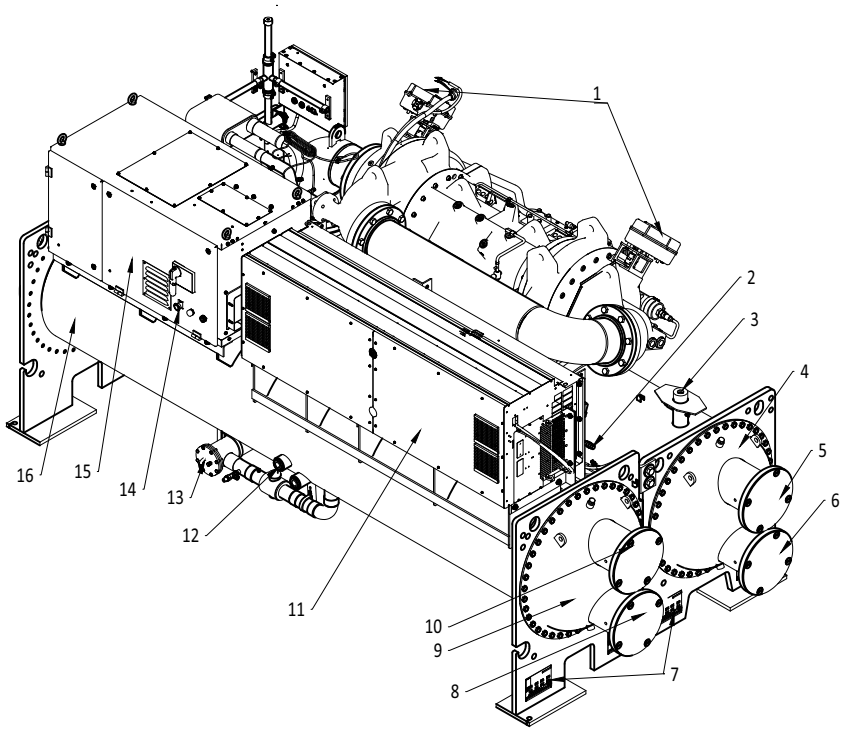

LEGEND
1 — Dual Inlet Guide Vane Actuators
2 — Condenser Dual Relief Valves
3 — Evaporator Relief Valve
4 — Evaporator Waterbox
5 — Leaving Evaporator Nozzle
6 — Entering Evaporator Nozzle
7 — ASME Nameplates
8 — Entering Condenser Nozzle
9 — Condenser Waterbox
10 — Leaving Condenser Nozzle
11 — VFD (Variable Frequency Drive)
12 — Condenser Sight Glasses
13 — Strainer
14 — E-stop
15 — Integrated Power and Control Panel
16 — Condenser

Fig. 4 — Typical 19MV3 Compressor Chiller Components, Standard Tier, Oil Bearing Option

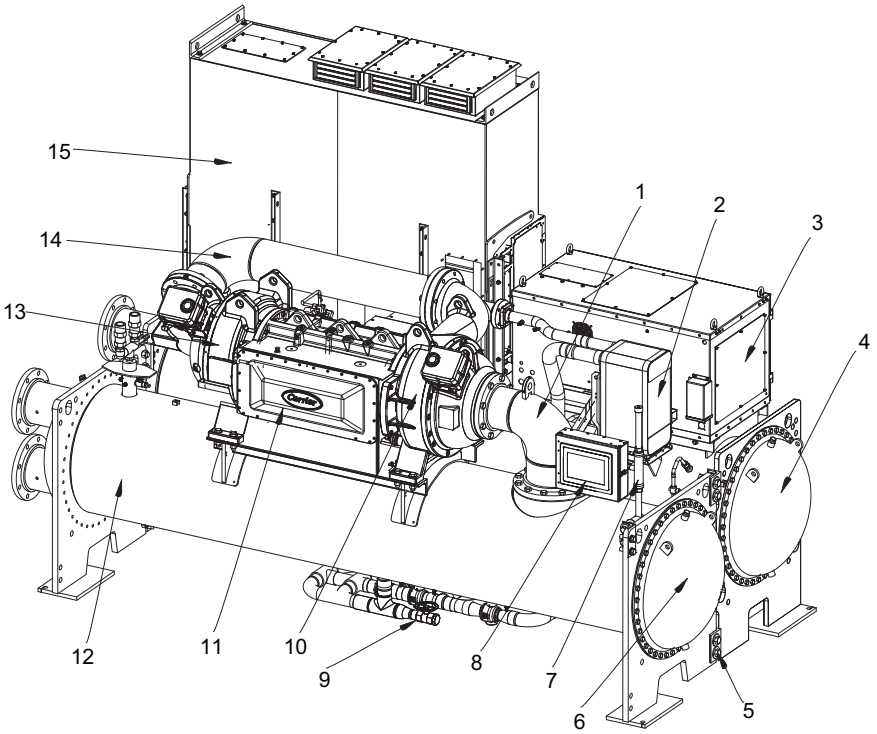

LEGEND
1 — Suction Elbow First Stage
2 — Refrigerant Economizer
3 — Integrated Power and Control Panel
4 — Condenser Waterbox Return End
5 — Bolt Together Plate
6 — Evaporator Waterbox Return End
7 — HMI Adjustment Arm
8 — 10.4 in. Color Touchscreen Display
9 — Refrigerant Charging Valve
10 — EquiDrive* Two-Stage Back-to-Back Centrifugal Compressor
11 — Permanent Magnet Motor (hidden)
12 — Evaporator
13 — Magnetic Bearing System
14 — Interstage Compressor Piping
15 — VFD (Variable Frequency Drive)

* Third-party trademarks and logos are property of their respective owners.

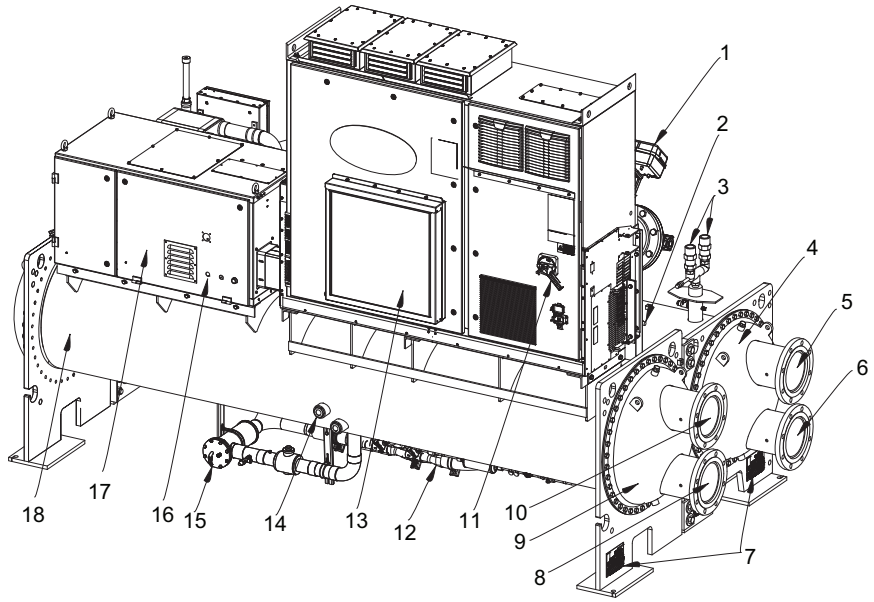

LEGEND
1 — Dual Inlet Guide Vane Actuators
2 — Condenser Dual Relief Valves
3 — Evaporator Dual Relief Valves
4 — Evaporator Waterbox
5 — Leaving Evaporator Nozzle
6 — Entering Evaporator Nozzle
7 — ASME Nameplates
8 — Entering Condenser Nozzle
9 — Condenser Waterbox
10 — Leaving Condenser Nozzle
11 — Main Circuit Breaker
12 — Dual Electronic Expansion Valves
13 — VFD (Variable Frequency Drive)
14 — Condenser Sight Glasses
15 — Strainer
16 — E-stop
17 — Integrated Power and Control Panel
18 — Condenser

Fig. 5 — Typical 19MV3 Compressor Chiller Components, High Tier, Magnetic Bearing Option

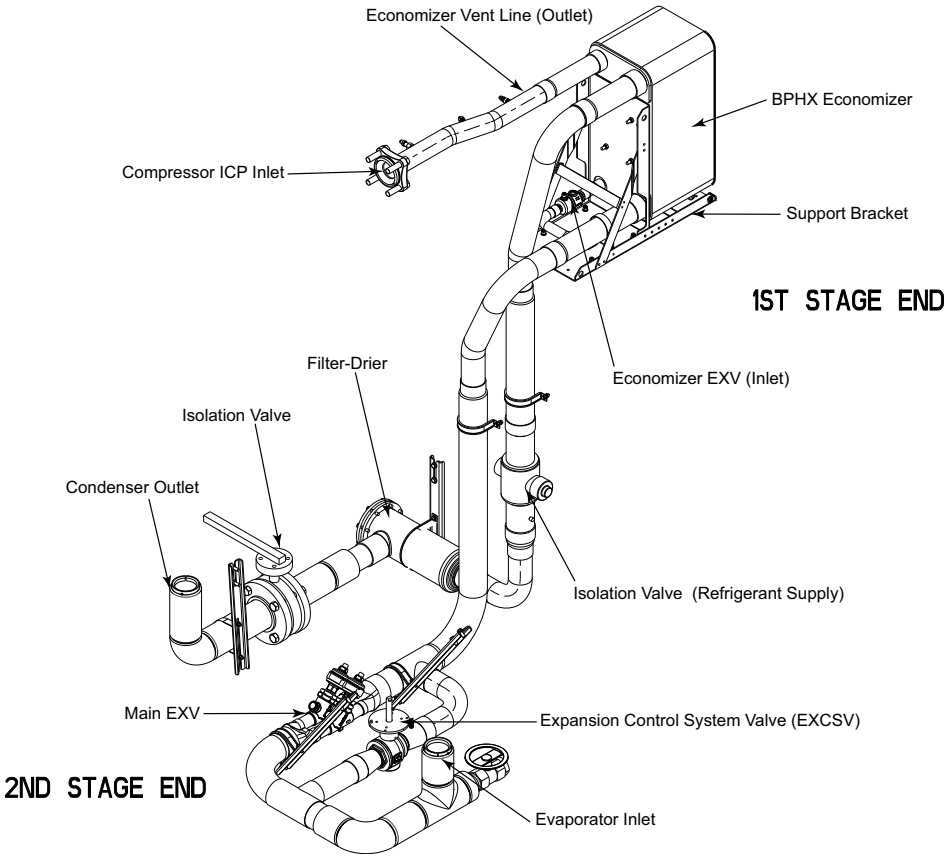

Fig. 6 — Typical 19MV Economizer Assembly Detail

Motor-Compressor

This component maintains system temperature and pressure differences and moves the heat-carrying refrigerant from the evaporator to the condenser. The 19MV chiller utilizes a two-stage back to back direct drive configuration with Interior Permanent Magnet (IPM) motor and active magnetic bearings.

Variable Frequency Drive (VFD)

The VFD variable frequency is a voltage source design that converts line voltage into PWM (pulse width modulating) motor input for motor speed and torque control.

Chiller Power Panel

The control panel includes the input and output boards (IOBs), control transformer, relays, contactors, and circuit breakers. It provides the power distribution and protection to the electrical components installed on chiller and has the following functions:

- Communication with PIC6 touch screen
- Communication with UPS
- Communication with VFD
- Sensor input and outputs
- Actuators control
- Communication with MBC

PIC6 Touch Screen HMI

This panel is the user interface for controlling the chiller and has the following functions:

- Chiller operation
- Chiller diagnostic
- Chiller status display
- Chiller parameter configuration
- Provide open protocol interface to outside BMS (Building Management System)

Magnetic Bearing Controller (MBC)

The 19MV compressor uses active magnetic bearings in place of traditional rolling element bearings, which eliminates the need for a lubrication system. The magnetic bearings are controlled by a dedicated Magnetic Bearing Controller (MBC), which communicates with the overall system PIC via Modbus communication. Information available from the MBC on the PIC HMI includes calibration status, clearance check values, drop counts, shaft speed, and shaft "orbit" (location) statistics. Due to the high sampling rate of the MBC as compared to the PIC, the orbit statistics provide a good approximation of shaft location in real time. For more detailed bearing information and diagnostics a direct PC connection can be made to the MBC using an Ethernet connection from the MBC board. If this is required consult Carrier Service Engineering.

UPS (Magnetic Bearing Only)

A Uninterrupted Power Supply module (UPS) with Modbus card is installed within the 19MV power panel. In the event of a power failure, the UPS provides power to chiller control components during power loss events in order to safely bring the levitated shaft to rest on the touch down bearings. If the power interruption is short, the UPS also supports fast restart of the chiller upon power restoration. The UPS communicates battery and power supply status to the PIC through Ethernet (Modbus IP) communication.

Expansion Control System

The expansion control system consists of a single or two parallel EXVs supported by a modulating expansion control system valve. The expansion control system valve can increase or decrease the flow area quickly and thereby support system stability and range, while the dual EXV provides precision flow control. The expansion system responds primarily to a liquid level sensor which monitors refrigerant level within the condenser. This arrangement is designed to provide high capacity during low lift operation. Figures 7 and 8 shows the liquid level assembly detail.

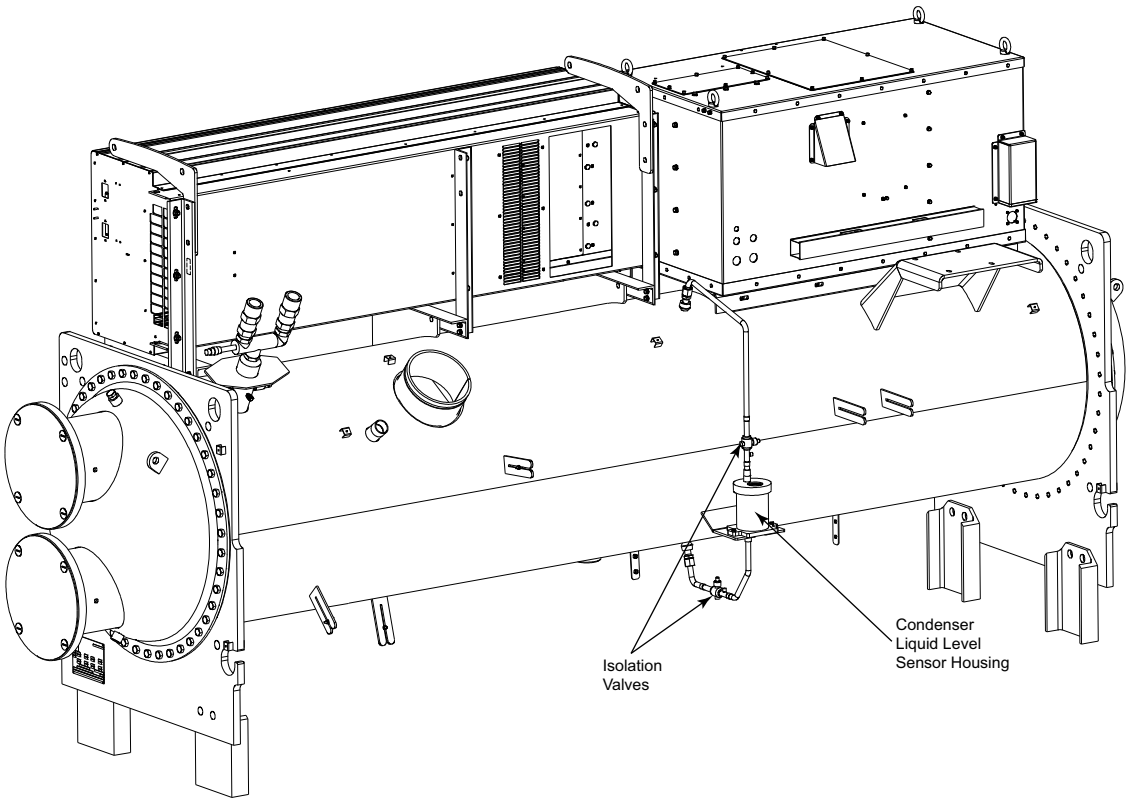

Fig. 7 — Typical 19MV3 Liquid Level Assembly Detail

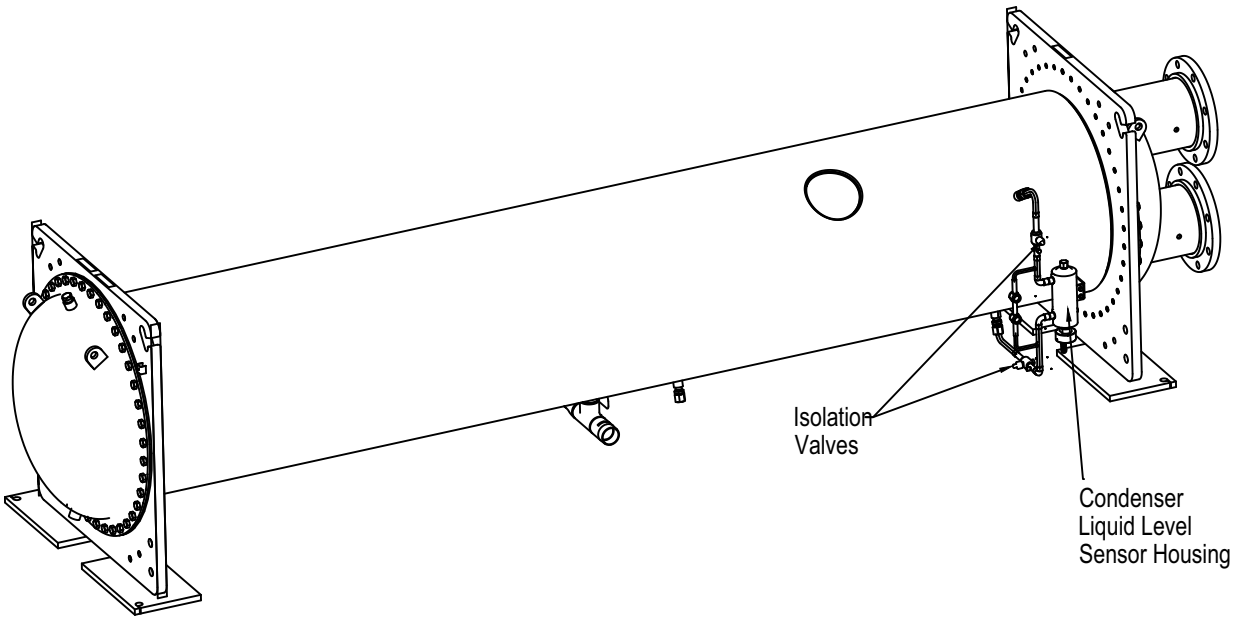

Fig. 8 — Typical 19MV2 Liquid Level Assembly Detail

REFRIGERATION CYCLE

The compressor continuously draws refrigerant vapor from the evaporator at a rate set by the amount of first stage guide vane opening and motor speed. As the compressor suction reduces the pressure in the evaporator, the remaining refrigerant boils at a fairly low temperature (typically 38 to 42°F [3 to 6°C]). The energy required for boiling is obtained from the water flowing through the evaporator tubes. With heat energy removed, the water becomes cold enough to use in an air-conditioning circuit or process liquid cooling.

After taking heat from the water, the refrigerant vapor is compressed by a back-to-back compression connected by means of interstage piping. Compression adds heat energy and the refrigerant is quite warm (typically 98 to 102°F [37 to 40°C]) when it is discharged from the compressor into the condenser.

Relatively cool (typically 65 to 90°F [18 to 32°C]) water flowing into the condenser tubes removes heat from the refrigerant, and the vapor condenses to liquid and is subcooled. The liquid drains from the bottom of the condenser and, for units equipped with economizer option, flows into the high pressure side of the BPHX.

At the outlet of the high pressure side of the BPHX a small portion of refrigerant is separated from the main stream, brought to a lower pressure by an EXV, and fed back through the low pressure side of the BPHX. As the two streams of refrigerant flow through the BPHX heat transfered from the main stream of refrigerant vaporizes the economizer stream. This vapor flows to the second stage of the compressor for greater cycle efficiency. The amount of vapor introduced to the second stage is determined by an EXV which meters the flow of vapor to maintain a specified vapor superheat.The cooled liquid flows out of the economizer and into the expansion control system and at this point the cycle is the same with or without the optional economizer. The expansion control system will meter the refrigerant follow into the evaporator for best system performance. See Fig. 9-12 for the refrigeration cycle diagram for economized and non-economized systems.

⚠ CAUTION

To avoid adverse effects on chiller operation, considerations must be made to condenser water temperature control. For steady state operation, the minimum operating refrigerant pressure differential between evaporator and condenser is approximately 7 psid (48 kPa) for 19MV units with optional economizer bypass with a maximum evaporator refrigerant temperature of 65°F (18°C). 19MVR units require a 9 psid (62 kPa) minimum pressure differential for oil return. Consult Chiller Builder for required steady state operational limits. Inverted start conditions are acceptable for short durations of time, but for periods exceeding 5 minutes, a special control solution strategy should be used to allow the chiller to establish a minimum refrigerant pressure differential (and thereby adequate equipment cooling).

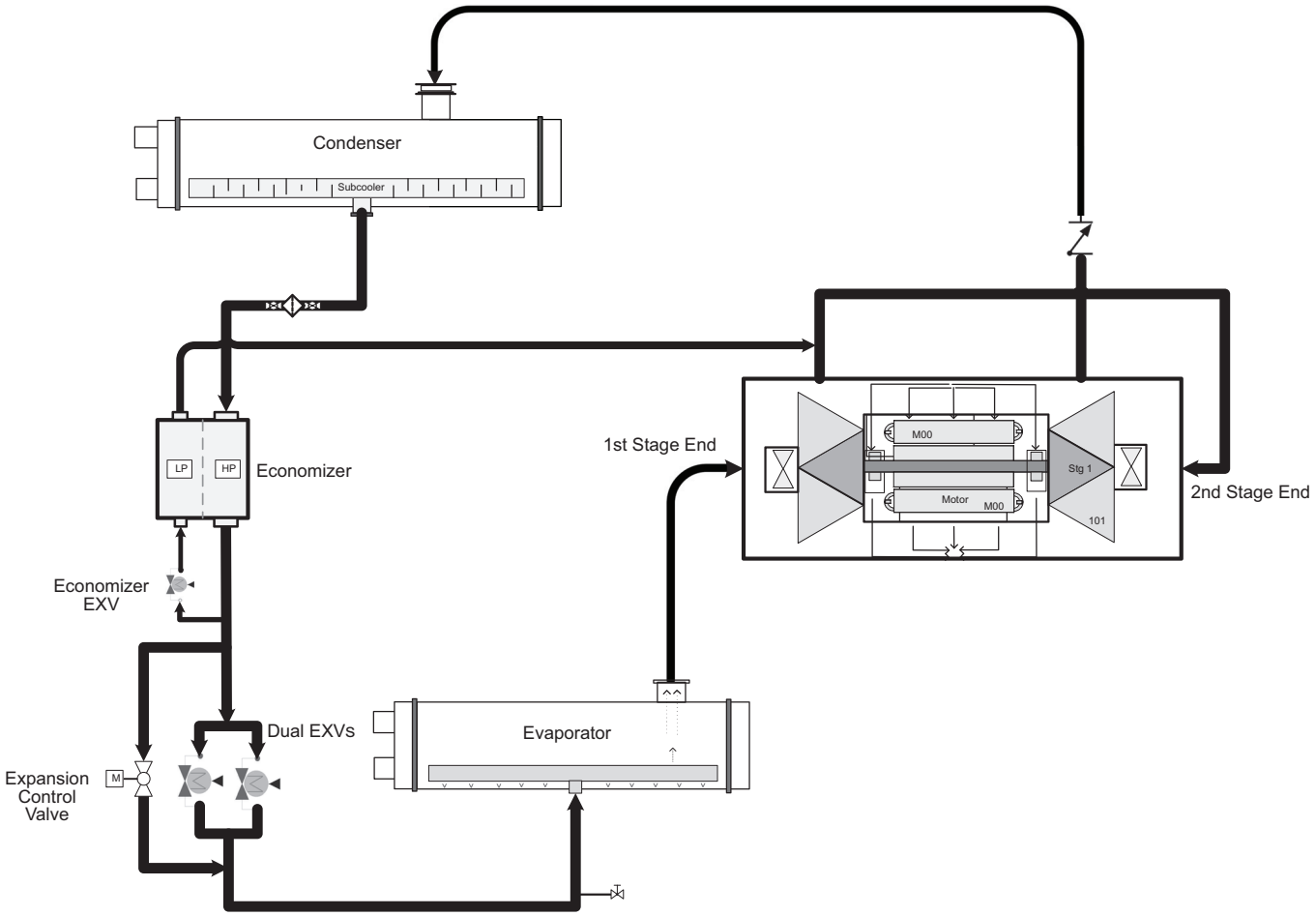

Fig. 9 — Refrigeration Cycle — 19MV with Magnetic Bearing Compressor and with Economizer

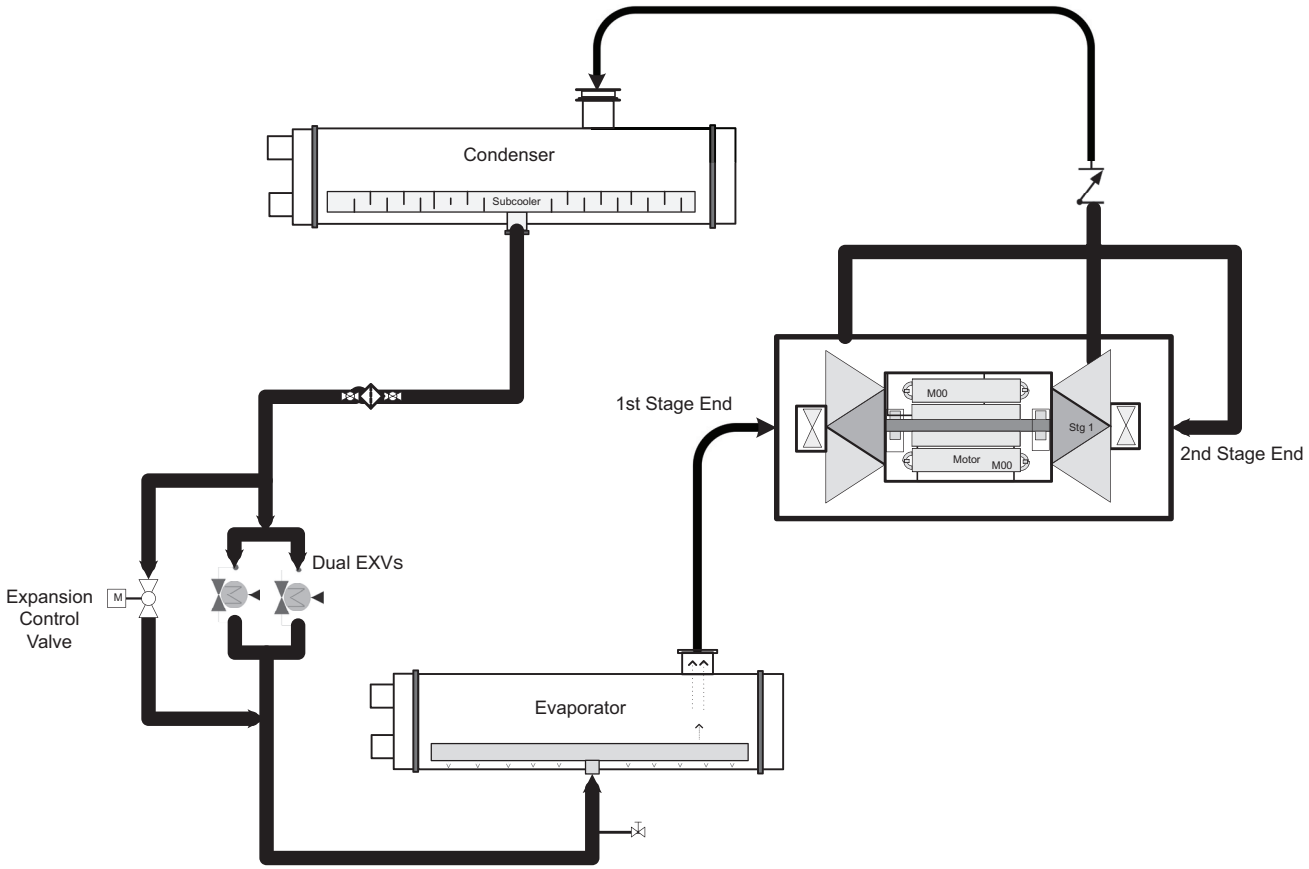

Fig. 10 — Refrigeration Cycle — 19MV with Magnetic Bearing Compressor and without Economizer

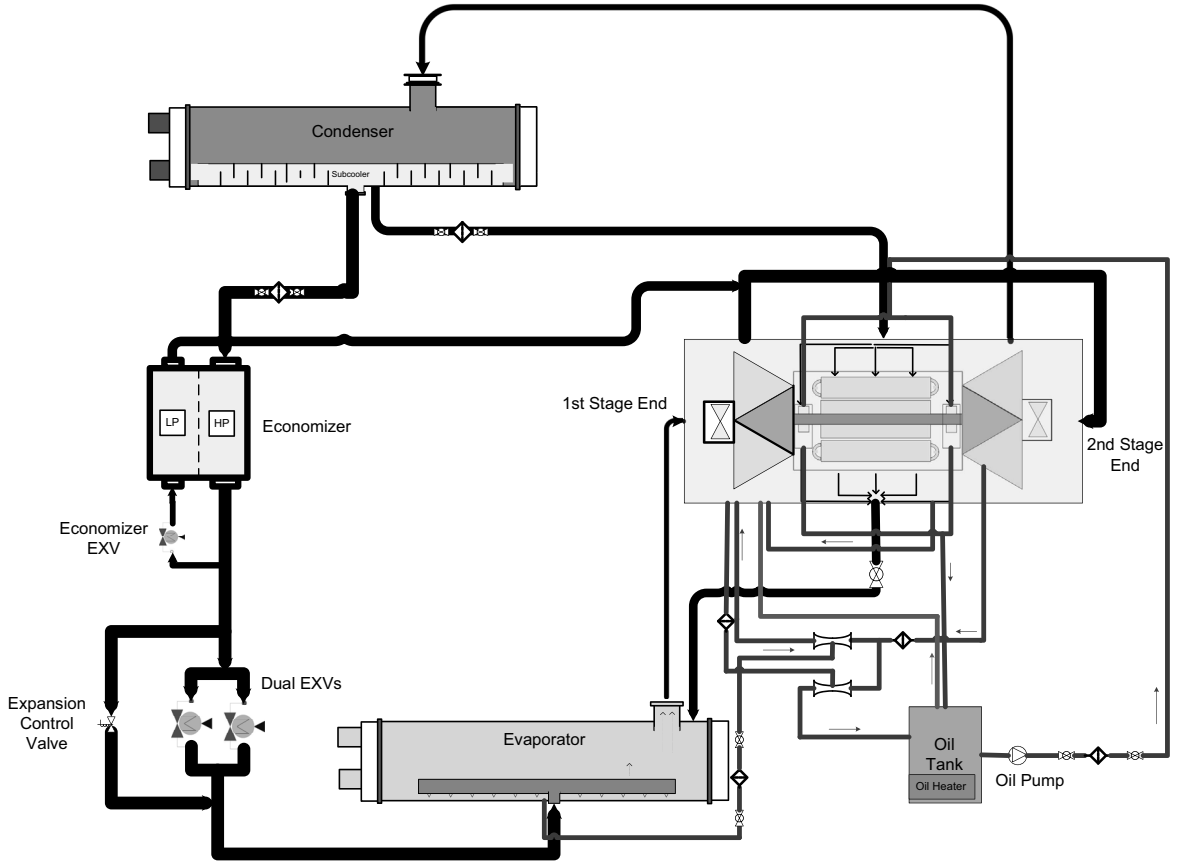

Fig. 11 — Refrigeration Cycle — 19MV with Oil Lubricated Compressor and with Economizer

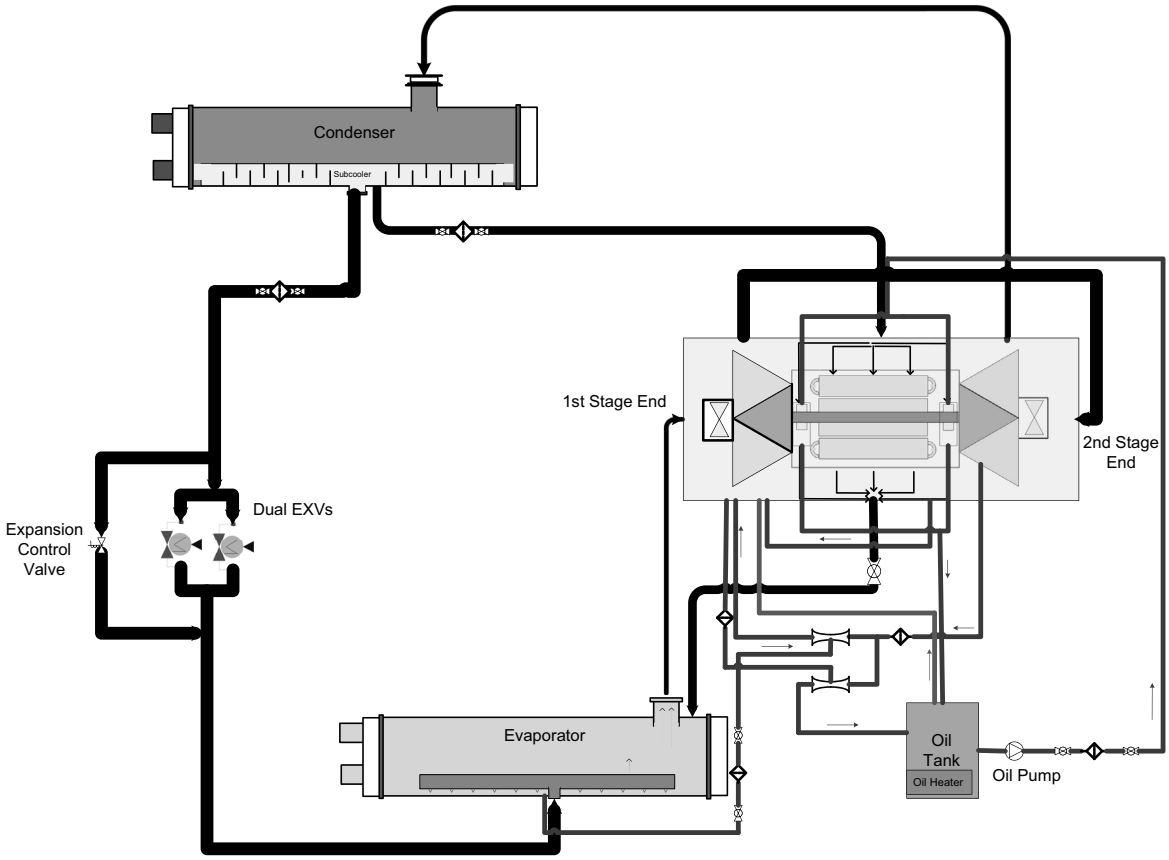

Fig. 12 — Refrigeration Cycle — 19MV with Oil Lubricated Compressor and without Economizer

Motor Cooling System

The motor and compressor bearings (magnetic bearings only) are cooled by liquid refrigerant taken from the bottom of the condenser shell. Refrigerant flow is maintained by the pressure differential that exists due to compressor operation. After exiting the condenser shell, the refrigerant flows through a moisture indicating sight-glass and an in-line filter drier. There is a ball valve positioned on each side of above components for ease of service. After this the refrigerant is split into several streams which are directed over the motor windings, thrust bearing, and radial bearings by spray nozzles. When the chiller is operating there should be turbulent two phase flow of refrigerant visible in the sight glass. The refrigerant collects in the bottom of the motor casing and is then drained back into the evaporator through the motor refrigerant drainline. The motor is protected by temperature thermistors embedded in the stator windings An increase in motor winding temperature past the motor override set point (200°F [93.3°C]) enables the capacity inhibit function. The inhibit is released when the temperature is below the motor override set point. If the motor temperature is greater than compressor motor override temperature plus 10°F (5.5°C) the capacity override will stay active until all the motor winding temps are less than the motor override setpoint minus 2°F (1.1°C). Note that unit will shut down if any motor temperature sensor exceeds 220°F (104.4°C). See Fig. 13.

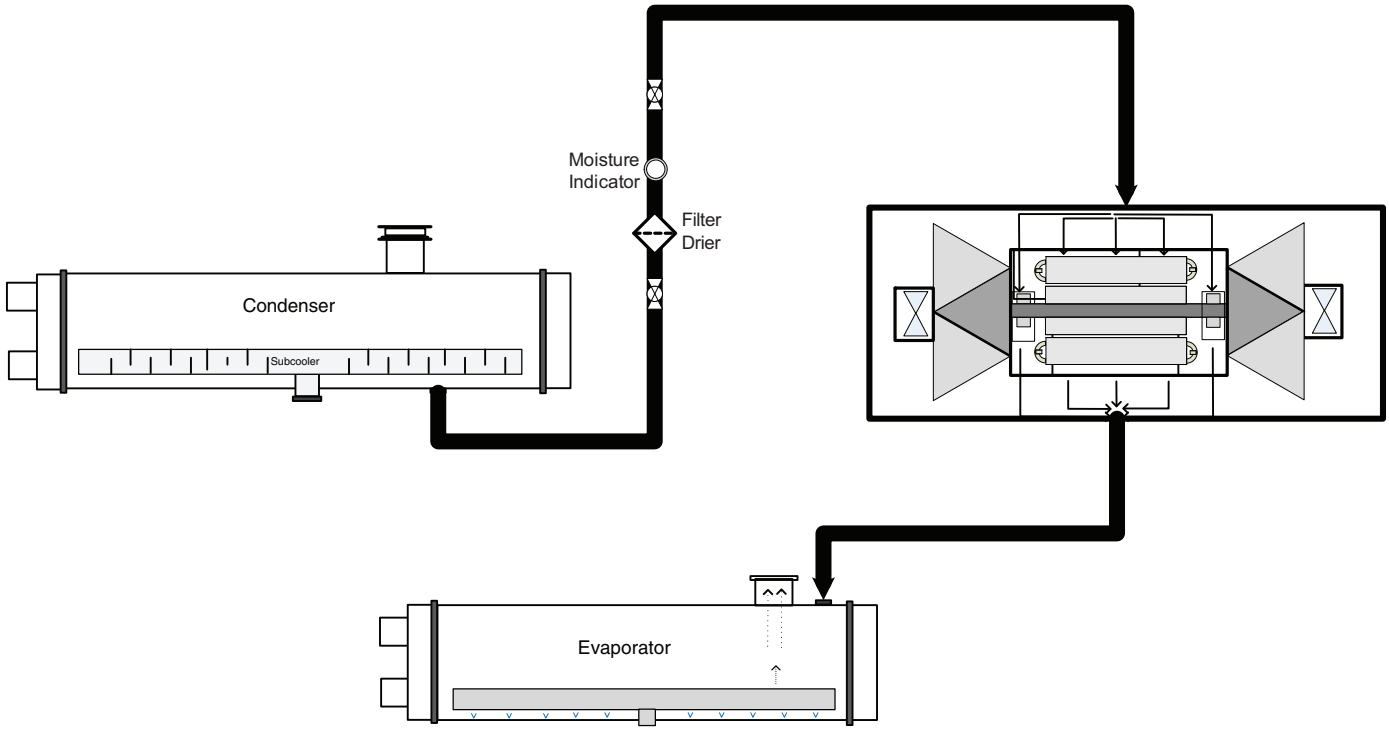

Fig. 13 — Motor Cooling System with Filter Drier and Moisture Indicator (Standard)

19MV3 OILED LUBRICATION CYCLE

Summary

The oil sump and oil pump are integrated into the compressor motor casing with an externally mounted oil filter. The oil is pumped into a filter assembly to remove foreign particles and is then motor shaft bearings. Oil drains from the bearings back into the motor housing oil sump to complete the cycle (Fig. 14).

Details

Oil is charged into the lubrication system through a hand valve. A multi-window sight glass in the oil reservoir permit oil level observation. Normal oil level is in the top half of the sight glass windows when the compressor is shut down. Oil sump temperature is displayed on the HMI default screen. During compressor operation, the oil sump temperature ranges between 72 and 131°F (22 and 55°C). The oil pump suction is fed from the oil reservoir. An oil pressure relief valve maintains differential pressure in the system at the pump discharge. A range of 24 to 44 psid (170 to 303 kPad) is normal. This differential pressure can be read directly from the default HMI screen. The oil pump discharges oil to the oil filter assembly. The filter service valves can be closed to permit removal of the filter without draining the entire oil system. As the oil leaves the oil filter, it passes the oil pressure transducer. The oil is then divided. Half of the flow goes to the first stage bearings and the other half goes to the second stage bearings. During the chiller start-up, the oil pump is energized and provides 40 seconds of lubrication to the bearings after pressure is verified before starting the compressor. During shutdown, the oil pump runs for 60 seconds to ensure lubrication as the compressor coasts to a stop. Ramp loading can be adjusted to help to slow the rate of guide vane opening to minimize oil foaming at start-up. If the guide vanes open quickly, the sudden drop in suction pressure can cause any refrigerant in the oil to flash. The resulting oil foam cannot be pumped efficiently; therefore, oil pressure falls off and lubrication is poor. If oil pressure falls below 15 psid (103 kPad) differential, the controls will shut down the compressor. The oil pump is a gerotor-style pump with external filters. A gerotor pump has two rotors, one inside the other; their center points are offset with respect to each other. This type of pump provides a smooth continuous flow. It is also quieter and produces less vibration than other designs.

Bearings

The 19MV oiled compressor assemblies include four angular contact hybrid ceramic ball bearings. Two are located between the motor rotor and 1stage impeller and the remaining two are location between the motor rotor and second stage impeller.

Oil Reclaim System

The oil reclaim system returns oil lost from the compressor housing back to the oil reservoir by recovering the oil from 2 areas on the chiller. The first stage suction housing is the primary area of recovery. Oil is also recovered by skimming it from the operating refrigerant level in the cooler vessel.

PRIMARY OIL RECOVERY MODE

Oil is normally recovered through the first stage suction/guide vane housing on the chiller. This is possible because oil is normally entrained with refrigerant in the chiller. As the compressor pulls the refrigerant up from the cooler into the suction housing to be compressed, the oil normally drops out at this point and falls to the bottom of the suction housing where it accumulates. Using discharge gas pressure to power an eductor, the oil is drawn from the housing and is discharged into the oil reservoir.

SECONDARY OIL RECOVERY METHOD

The secondary method of oil recovery is significant under light load conditions when the refrigerant going up to the compressor suction does not have enough velocity to bring oil along. Under these conditions, oil collects in a greater concentration at the top level of the refrigerant in the cooler. Using a minimum of 9°F of water side lift and discharge gas to power eductors, this oil and refrigerant mixture is skimmed from the side of the cooler and is then drawn up to the suction housing. There is a filter in this line. Because the suction/guide vane housing pressure is much lower than the cooler pressure, the refrigerant boils off, leaving the oil behind to be collected by the primary oil recovery method. The oil collected in the second stage volute is also reclaimed through tubing routed from the second stage volute to the first stage volute. This is a parasitic loss that is uncontrolled.

Lubrication Control

As part of the pre-start checks executed by the controls, the oil sump temperature is compared to the evaporator saturated refrigerant temperature. The start-up will be delayed until either of the following conditions is no longer true.

Case 1: If swift restart is active and, if OILT_SMP is less than 68°F (20°C) and OILT_SMP is less than EVAP_SAT plus 40°F (22°C).

Case 2: If swift restart isn't active and if OILT_CHK is disabled and, if OILT_SMP is less than 113°F (45°C) and OILT_SMP is less than EVAP_SAT plus 40°F (22°C).

Case 3: If swift restart isn't active and if OILT_CHK is enabled and, if OILT_SMP is less than 113°F (45°C) and OILT_SMP is less than EVAP_SAT plus 50°F (28°C).

Once this temperature is confirmed, the start-up continues. The oil heater relay is energized whenever the chiller compressor is off and the oil sump temperature is less than 115°F (46°C) or the oil sump temperature is less than the evaporator saturated refrigerant temperature plus 53°F (29.4°C). The oil heater is turned off when either of the following conditions is true:

- Oil sump temperature is more than 140°F (60°C)
- Oil sump temperature is more than 130°F (54.4°C) and more than the evaporator saturated refrigerant temperature plus 55°F (30.6°C)

The oil pump is also energized for 30 seconds after each 30 minutes of oil heat relay being energized in order to stir the oil for more evenly distributed heating.

Oil Charge

The oil charge for the 19MV Oiled compressor is 6.08 gal (23 L).

The chiller is shipped with oil in the compressor. When the sump is full, the oil level should be visible in the sight glass windows. If oil is added, it must meet Carrier's specification for centrifugal compressor use as described in the Oil Specification section. Charge the oil through the oil charging valve located near the bottom of the motor housing. The oil must be pumped from the oil container through the charging valve due to higher refrigerant pressure. The pumping device must be able to lift from 0 to 200 psig (0 to 1380 kPa) or above unit pressure. Oil should only be charged or removed when the chiller is shut down.

Power Up Controls and Check Oil Heater

Ensure that an oil level is visible in the compressor and the chiller is not in a vacuum before energizing the controls. The oil heater is energized by powering the control circuit. This should be done several hours before start-up to minimize oil-refrigerant migration. The oil heater is controlled by the PIC6 and is powered through a contactor in the control panel. A separate circuit breaker powers the heater and the control circuit. This arrangement allows the heater to energize when the main motor circuit breaker is off for service work or extended shutdowns.

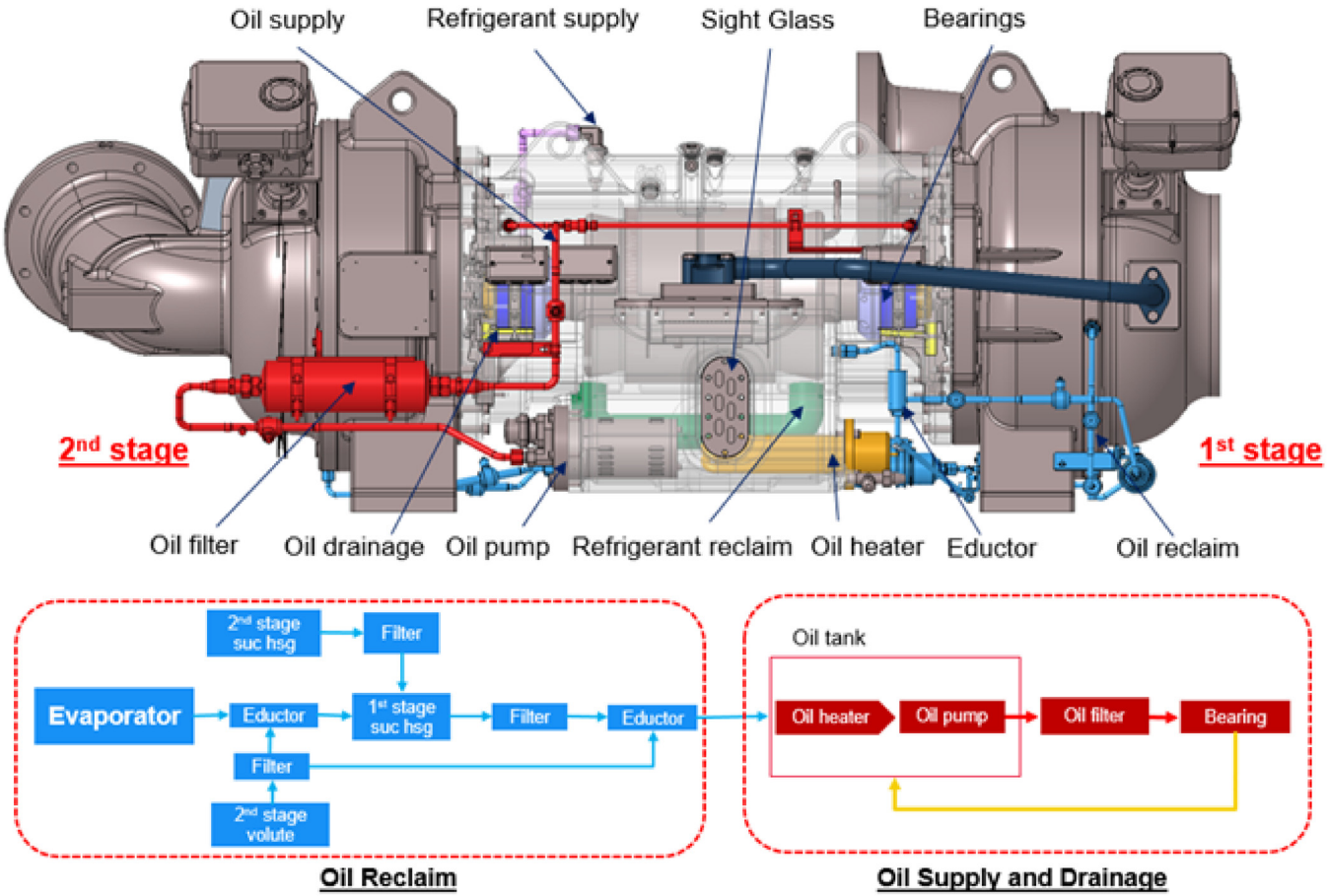

Fig. 14 — 19MV3 Oiled Compressor Lubrication System

VFD

The 19MV unit mounted starters are Danfoss FC102 VFDs family for standard tier and Rockwell PF755TL for high tier. The VFDs are used to run Carrier's Interior Permanent Magnet (IPM), gear-less compressors family. The VFD, power panel, and control panel are mounted on the chiller. See manufacturer VFD specific information and VFD schematics. Table 1 lists drives used with 19MV units:

The drives are designed to operate in an ambient range of up to 104°F (40°C) without de-rating the VFD. Consult Engineering for ambient temperatures greater than this value. Both manufacturer's drives are designed to allow service to repair the units without removing them from the chiller. For standard tier drives, line reactors are offered as an option to improve the units' reliability and harmonics. The optional high tier drives have an active front end. The high tier VFDs meet IEEE-519 ≤ 5% iTHD at the common point of coupling. Optional volt and amp meters located in the power panel are offered on both standard and high tier VFDs. See Fig. 15 and 16.

Table 1 — Drives Used with 19MV Units

DRIVE	APPROXIMATE WEIGHT	
	lb	kg
DD212 (N110)	135	61
DD260 (N132)	135	61
DD315 (N160)	135	61
DD395 (N200)	325	148
DD480 (N250)	325	148
DD588 (N315)	325	148
DE658 (N355)	700	318
DE745 (N400)	700	318
DE800 (N450)	700	318
DE990 (N560)	750	341
PF755	1962	890

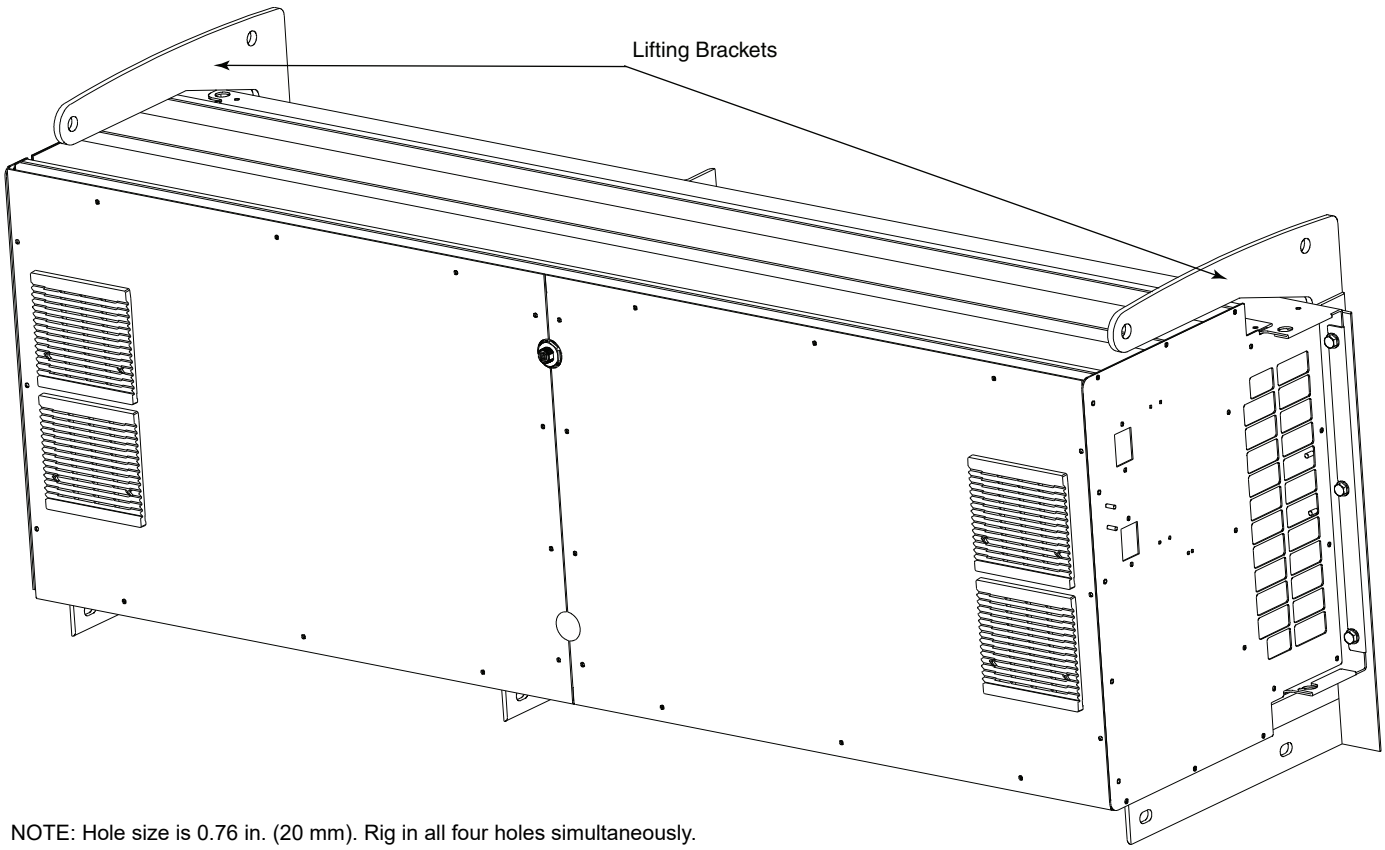

NOTE: Hole size is 0.76 in. (20 mm). Rig in all four holes simultaneously.

Fig. 15 — Standard Tier VFD Lifting Brackets

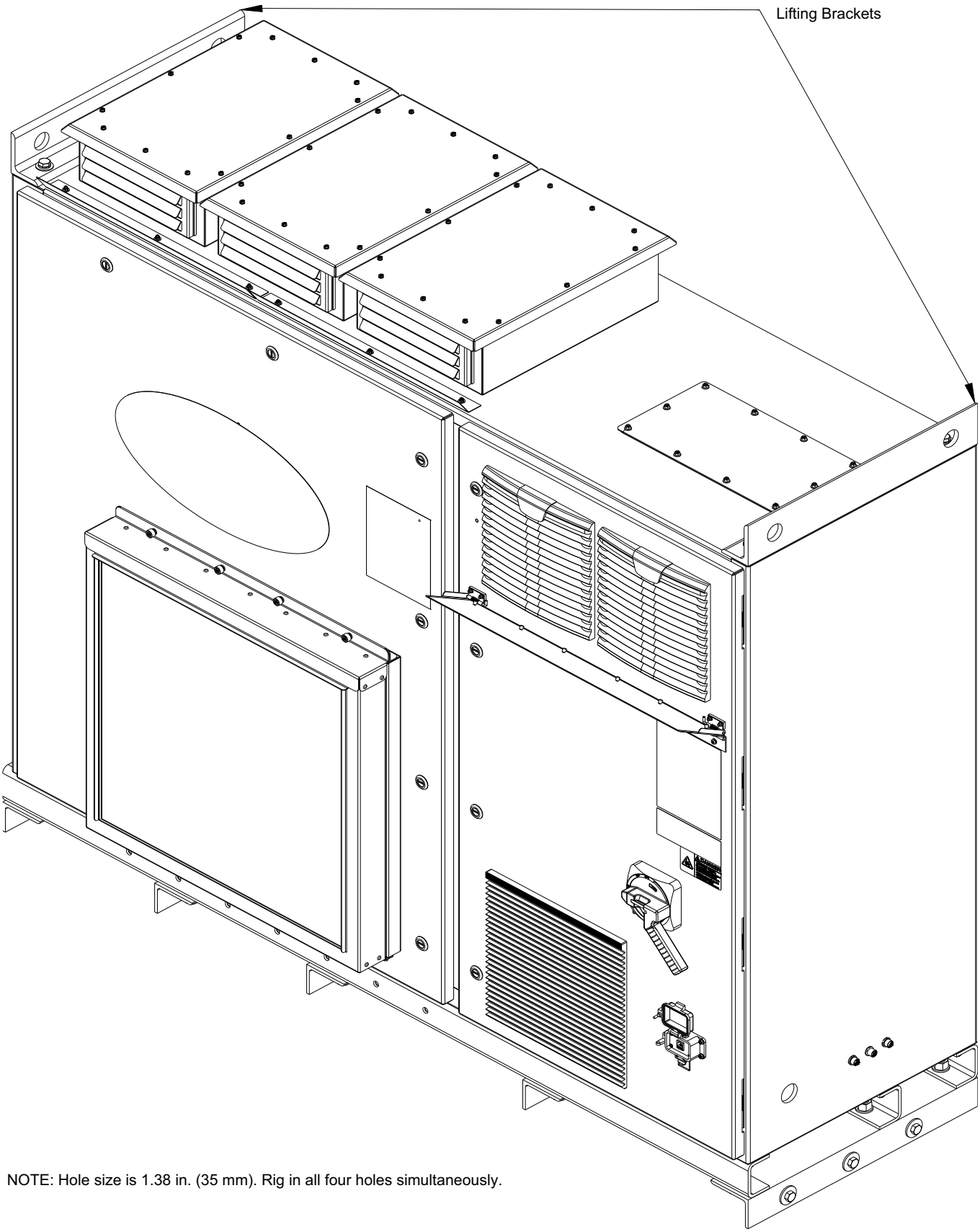

NOTE: Hole size is 1.38 in. (35 mm). Rig in all four holes simultaneously.

Fig. 16 — High Tier VFD Lifting Brackets

CONTROLS

Definitions

ANALOG SIGNAL

An *analog signal* varies in proportion to the monitored source. It quantifies values between operating limits. For example, a temperature sensor is an analog device because its resistance changes in proportion to the temperature, generating many values. The signal can be either voltage or current.

DISCRETE SIGNAL

A *discrete signal* is a 2-position representation of the value of a monitored source. For example, a switch produces a discrete signal indicating whether a value is above or below a set point or boundary by generating an on/off, high/low, or open/closed signal.

General

The 19MV centrifugal liquid chiller contains a microprocessor based control center that monitors and controls all operations of the chiller. The microprocessor control system matches the cooling capacity of the chiller to the cooling load while providing state-of-the-art chiller protection. The system controls cooling load within the set point plus the dead band by sensing the leaving chilled water or brine temperature and regulating the inlet guide vanes and compressor speed. The guide vane is a variable flow pre-whirl assembly that controls the refrigeration effect in the evaporator by regulating the amount of refrigerant vapor flow into the compressor. An increase in guide vane opening increases capacity. A decrease in guide vane opening decreases capacity. The microprocessor-based control center protects the chiller by monitoring the digital and analog inputs and executing capacity overrides or safety shutdowns, if required. The variable frequency drive (VFD) allows compressor start-up and capacity control by modulating the motor frequency based on the operating condition.

PIC6 System Components

The chiller control system is called the PIC6 (Product Integrated Control 6). See Table 2 for details on major controls components and panel locations. As with previous PIC versions, the PIC6 system controls the operation of the chiller by monitoring all operating conditions. The PIC6 control system can diagnose a problem and let the operator know what the problem is and what to check. It positions the guide vanes and VFD speed to maintain leaving chilled water temperature. It controls the refrigerant expansion system for optimal chiller operation and can interface with auxiliary equipment such as pumps and cooling tower fans to turn them on when required. It communicates and interacts with the MBC and monitors the UPS for charge level and battery health. It continually checks all safeties to prevent any unsafe operating condition. The PIC6 controls offer an operator trending function to help the operator monitor the chiller status more easily and for critical compressor motor protection. The PIC6 system provides open protocols to support the competitive BMS system and can be integrated into Carrier's Lifecycle System Management for remote monitoring and data management.

Table 2 — Major Controls Components and Panel Locations

PIC6 COMPONENT	PANEL LOCATION
Variable Frequency Drive (Standard Tier, High Tier)	Top of condenser (19MV3), side of condenser (19MV2)
Magnetic Bearing Controller (MBC)	Side of compressor
Uninterrupted Power Supply (UPS)	Power panel, high voltage section
Remote Monitoring	Power panel, low voltage section
Power Panel	On condenser, first stage end (19MV3), side of condenser, first stage end (19MV2)
HMI	Side of cooler, first stage end

NOTE: For detailed information about the PIC6 HMI (human machine interface), see the 19MV with PIC6 Controls Operation and Troubleshooting manual.

START-UP/SHUTDOWN/RECYCLE SEQUENCE

Local Start/Stop Control

Local start-up (or manual start-up) is initiated by pressing the gray Start/Stop icon on the HMI interface. See Fig. 17.

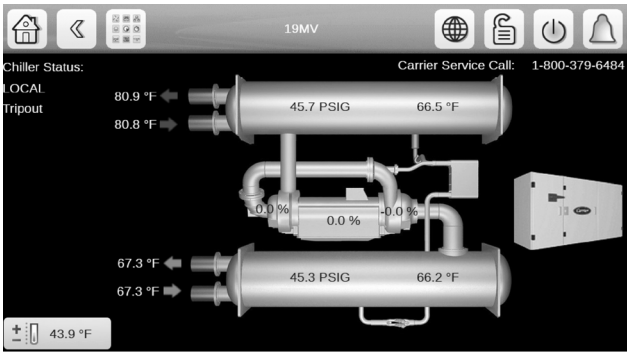

Fig. 17 — Chiller Start/Stop Icon

This initiates the PIC6 starting sequence by displaying the list of operating modes. Press Local On to initiate start-up. See Fig. 18.

Prior to start-up the start-to-start timer and the stop-to-start timer must have elapsed and all alarms must be cleared (see Troubleshooting Guide section).

When start-up is initiated the status screen displays the start-up progress and the Start/Stop icon blinks green.

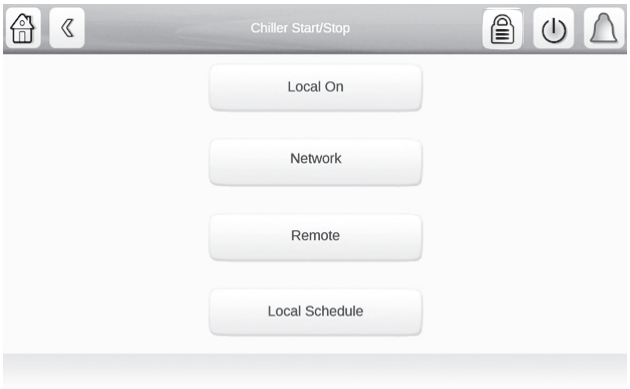

Fig. 18 — Local On

Once local start-up begins, the PIC6 control system performs a series of prestart tests to verify that all prestart alerts and safeties are within acceptable limits. Table 3 shows appropriate Prestart Alerts/Alarms conditions. If a test is not successful, the start-up is delayed or aborted. If the prestart tests are successful, the PIC6 will perform MBC pre-start checks. After the MBC checks are passed, the start-up will be in progress and the COMPRESSOR RUN STATUS will be "Startup." The system will send a command for the MBC to levitate the compressor shaft. If the compressor is not ready or unable to levitate the shaft, start-up will be aborted. If successful, the control will then energize the chilled water/brine pump relay.

Five seconds later, the condenser pump relay energizes. Thirty seconds later the PIC6 control system monitors the chilled water and condenser water flow devices and waits until *WATER FLOW VERIFY TIME* (operator-configured, default 5 minutes) expires to confirm flow. After flow is verified, the chilled water temperature is compared to *CONTROL POINT* plus *1/2 CHILLED WATER DEADBAND*. If the temperature is less than or equal to this value, the PIC6 control system turns off the condenser pump relay and goes into a Recycle mode.

If the water/brine temperature is high enough, the start-up sequence continues and checks the guide vane position. If the guide vanes are more than 4% open, the start-up waits until the PIC6 control system closes the vanes.

Compressor ontime and service ontime timers start, and the compressor *STARTS IN 12 HOURS* counter and the number of starts over a 12-hour period counter advance by one.

Failure to verify any of the requirements up to this point will result in the PIC6 control system aborting the start and displaying the applicable prestart alert alarm state number near the bottom of the home screen on the HMI panel. A prestart failure does not advance the *STARTS IN 12 HOURS* counter. Any failure after the 1CR/Start relay has energized results in a safety shutdown, advances the starts in 12 hours counter by one, and displays the applicable shutdown status on the display.

The minimum time to complete the entire prestart sequence is approximately 185 seconds. See Fig. 19 and 20 for normal start-up timing sequence. See Tables 3 and 4 for a list of prestart checks.

Table 3 — Prestart Checks for 19MV with MBC

PRESTART CHECK CONDITION[a]	STATE NUMBER[b]
STARTS IN 12 HOURS ≥8 (not counting recycle restarts or auto restarts after power failure) and Frequent Start Option is not enabled. If Frequent Restart Option is enabled then STARTS IN 12 HOURS ≥ 24.	Alert 100
COND PRESSURE ≥ COND PRESS OVERRIDE	Alert 102
# Recycle restarts in the last 4 hours > 5 if Frequent Start Option is not Enabled. RECYCLE RESTARTS LAST 1 HOURS > 4 if Frequent Start Option is Enabled.	Alert 103
MBC alert	Alert 106
MBC not ready to levitate	Alert 115
COMP MOTOR WINDING TEMP ≥ COMP MOTOR WINDING – 10°F (5.6°C)	Alarm 231
COMP DISCHARGE TEMPERATURE ≥ COMP DISCHARGE ALERT – 10°F (5.6°C)	Alarm 232
EVAP_SAT < refrig trip[c] + EVAP OVERRIDE DELTA T	Alarm 233
EVAP REFRIG LIQUID TEMP < refrig trip[c] + EVAP OVERRIDE DELTA T	
AVERAGE LINE VOLTAGE ≤ UNDERVOLTAGE THRESHOLD	Alarm 234
AVERAGE LINE VOLTAGE ≥ OVERVOLTAGE THRESHOLD	Alarm 235
Guide Vane 1 Calibration not completed	Alarm 236
Guide vane 2 calibration not completed	Alarm 238
EXCSV (expansion control system valve) calibration not completed	Alarm 242
Power Panel Over Temperature	Alarm 243
MBC unable to levitate	Alarm 456

NOTE(S):

a. If Prestart Check Condition is True, then resulting State is as indicated in the State Number column.
b. See the Controls Operation and Troubleshooting guide for alarm and alert codes.
c. Refrig trip = 33°F (0.6°C) for water or configurable for brine applications.

Table 4 — Prestart Checks for 19MV3 with Oil Lubricated Compressor

PRESTART CHECK CONDITION[a]	STATE NUMBER[b]
STARTS IN 12 HOURS ≥8 (not counting recycle restarts or auto restarts after power failure) and Frequent Start Option is not enabled. If Frequent Restart Option is enabled then STARTS IN 12 HOURS ≥ 24.	Alert 100
Case 1: If swift restart is active and, if OILT_SMP is less than 68°F (20°C) and OILT_SMP is less than EVAP_SAT plus 40°F (22°C). Case 2: If swift restart isn't active and if OILT_CHK is disabled and, if OILT_SMP is less than 113°F (45°C) and OILT_SMP is less than EVAP_SAT plus 40°F (22°C). Case 3: If swift restart isn't active and if OILT_CHK is enabled and, if OILT_SMP is less than 113°F (45°C) and OILT_SMP is less than EVAP_SAT plus 50°F (28°C).	Alert 101
COND PRESSURE ≥ COND PRESS OVERRIDE	Alert 102
# Recycle restarts in the last 4 hours > 5 if Frequent Start Option is not Enabled. RECYCLE RESTARTS LAST 1 HOURS > 4 if Frequent Start Option is Enabled.	Alert 103
COMP BEARING TEMPS ≥ COMP BEARING ALERT – 10°F (5.6°C).	Alarm 230
COMP MOTOR WINDING TEMP ≥ COMP MOTOR WINDING – 10°F (5.6°C)	Alarm 231
COMP DISCHARGE TEMPERATURE ≥ COMP DISCHARGE ALERT – 10°F (5.6°C)	Alarm 232
EVAP_SAT < refrig trip[c] + EVAP OVERRIDE DELTA T	Alarm 233
EVAP REFRIG LIQUID TEMP < refrig trip[c] + EVAP OVERRIDE DELTA T	
AVERAGE LINE VOLTAGE ≤ UNDERVOLTAGE THRESHOLD	Alarm 234
AVERAGE LINE VOLTAGE ≥ OVERVOLTAGE THRESHOLD	Alarm 235
Guide Vane 1 Calibration not completed	Alarm 236
Guide vane 2 calibration not completed	Alarm 238
EXCSV (expansion control system valve) calibration not completed	Alarm 242
Power Panel Over Temperature	Alarm 243

NOTE(S):

a. If Prestart Check Condition is True, then resulting State is as indicated in the State Number column.
b. See the Controls Operation and Troubleshooting guide for alarm and alert codes.
c. Refrig trip = 33°F (0.6°C) for water or configurable for brine applications.

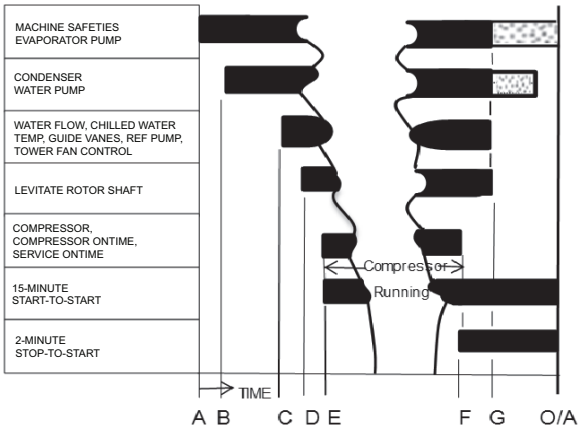

A	START INITIATED: prestart checks are made; evaporator pump started.[a]
B	Condenser water pump started (1 second after A).
C	Water flows verified (5 seconds to 5 minutes maximum after B). Chilled water temperatures checked against control point. Guide vanes checked for closure. Tower fan control enabled.
D	Ref pressure verified (15 seconds minimum, 300 seconds maximum after C). Levitate rotor shaft and check 10s later that MBC indicates levitation successful.
E	Compressor motor starts; compressor on-time and service on-time start, 15-minute inhibit timer starts (10 seconds after D), total compressor starts advances by one, and the number of starts over a 12-hour period advances by one.
F	Shutdown initiated; Compressor motor stops; compressor on-time and service on-time stop, and 2-minute inhibit timer starts.
G	De-levitate rotor shaft and evaporator pumps deenergized (120 seconds after F). Condenser pump and tower fan control may continue to operate if condenser pressure is high. Evaporator pump may continue if in Recycle mode.
O/A	Restart permitted (both inhibit timers expired: minimum of 15 minutes after E; minimum of 2 minutes after F).

NOTE(S):

a. Auto Restart After Power Failure Timing sequence will be faster.

Fig. 19 — Control Timing Sequence for Normal Start-Up (Magnetic Bearing)

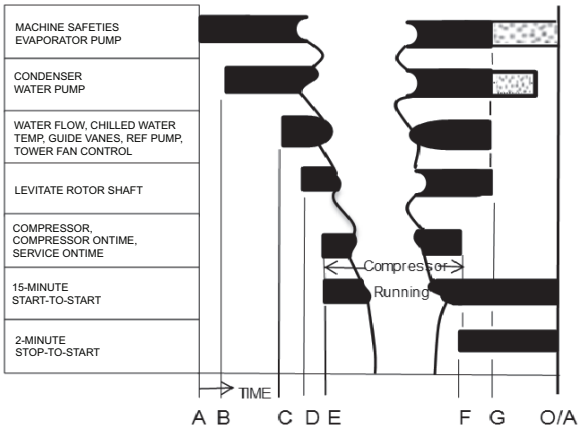

A	START INITIATED: prestart checks are made; evaporator pump started.[a]
B	Condenser water pump started (1 second after A).
C	Water flows verified (5 seconds to 5 minutes maximum after B). Chilled water temperatures checked against control point. Guide vanes checked for closure. Tower fan control enabled.
D	Ref pressure verified (15 seconds minimum, 300 seconds maximum after C). Oil pressure verified (15 seconds minimum, 300 seconds maximum after C).
E	Compressor motor starts; compressor on-time and service on-time start, 15-minute inhibit timer starts (10 seconds after D), total compressor starts advances by one, and the number of starts over a 12-hour period advances by one.
F	Shutdown initiated; Compressor motor stops; compressor on-time and service on-time stop, and 2-minute inhibit timer starts.
G	Oil pump and evaporator pumps deenergized (120 seconds after F). Condenser pump and tower fan control may continue to operate if condenser pressure is high. Evaporator pump may continue if in Recycle mode.
O/A	Restart permitted (both inhibit timers expired: minimum of 15 minutes after E; minimum of 2 minutes after F).

NOTE(S):

a. Auto Restart After Power Failure Timing sequence will be faster.

Fig. 20 — Control Timing Sequence for Normal Start-Up (Oiled Bearing)

Shutdown

The unit can be stopped locally using the HMI by pressing the green Start/Stop icon ⏻. The Unit Start/Stop screen is displayed. Press Confirm Stop (see Fig. 21).

Fig. 21 — Confirm Stop

Chiller shutdown begins if any of the following occurs:

- Local OFF button is pressed.
- A recycle condition is present.
- The time schedule has gone into unoccupied mode when in Network or Local Schedule control mode.
- The chiller protective limit has been reached and chiller is in alarm.
- The start/stop status (CHIL_S_S) is overridden to stop from the network when in Network mode.

If the chiller is normally shut down from running, soft stop shutdown will be performed. The soft stop feature closes the guide vanes of the compressor automatically if a non-alarm stop signal occurs before the compressor motor is deenergized.

Any time the compressor is directed to stop (except in the cases of a fault shutdown), the guide vanes are directed to close and VFD is directed to minimum speed for variable speed compressor, and the compressor shuts off when any of the following is true:

- PERCENT LOAD CURRENT (%) drops below the SOFT STOP AMPS THRESHOLD
- ACTUAL GUIDE VANE OPENING drops below 4%
- 4 minutes have elapsed after initializing stop.

When any one of the above conditions is true, the shutdown sequence stops the compressor by deactivating the compressor start relay. Then the guide vane shall be closed and stay at the fully closed position, MBC will de-levitate the shaft once the shaft has stopped rotating, and the chilled water/brine pump and condenser water pump will be shut down.

BEFORE INITIAL START-UP

Job Data Required

- list of applicable design temperatures and pressures (product data submittal) from the Equipment Sales Engineer who sold the equipment
- chiller certified prints
- wiring diagrams
- diagrams and instructions for special controls or options
- 19MV Installation Instructions

Equipment Required

- Meg-ohm tester with 500-1000vdc output
- mechanic's tools (refrigeration)
- digital volt-ohmmeter (DVM)
- true RMS (root mean square) digital multimeter with clamp-on current probe or true RMS digital clamp-on ammeter rated for at least 575 vac and 1000 amps
- electronic refrigerant leak detector
- absolute pressure manometer or electronic micron gauge (see Fig. 22)

Fig. 22 — Digital Vacuum Gauge

Remove Shipping Packaging

Remove any packaging material from the unit, VFD, and power panels. Inspect the unit for damage that occurred during shipping or installation. Document any damage that was identified.

Tighten All Gasketed Joints

Gaskets normally relax by the time the chiller arrives at the job-site. Tighten all gasketed joints to ensure a leak-tight chiller (does not apply to refrigerant joints covered by factory insulation).

Gasketed joints (excluding O-ring face seals[1]) may include joints at some or all of the following:

- Waterbox covers
- Compressor first suction elbow flanges (at compressor and at evaporator)
- BPHX discharge flange (option)
- Compressor discharge flange
- Isolation valve flanges (at condenser drain)
- ICP piping flanges

See Tables 5 and 6 for bolt torque requirements and Table 7 for ORFS torque requirements.

1. O-ring face seals (ORFS) are factory torqued. See Table 7 for ORFS torque requirements.

Table 5 — Bolt Torque Requirements, Foot Pounds

BOLT SIZE (in.)	SAE 2, A307 GR A HEX HEAD NO MARKS LOW CARBON STEEL		SAE 5, SOCKET HEAD OR HEX WITH 3 RADIAL LINES, OR SA499 MEDIUM CARBON STEEL		SAE 8, HEX HEAD WITH 6 RADIAL LINES OR SA354 GR BD MEDIUM CARBON STEEL	
	Minimum	Maximum	Minimum	Maximum	Minimum	Maximum
1/4	4	6	6	9	9	13
5/16	8	11	13	18	20	28
3/8	13	19	22	31	32	46
7/16	21	30	35	50	53	75
1/2	32	45	53	75	80	115
9/16	46	65	75	110	115	165
5/8	65	95	105	150	160	225
3/4	105	150	175	250	260	370
7/8	140	200	265	380	415	590
1	210	300	410	580	625	893
1-1/8	330	475	545	780	985	1,410
1-1/4	460	660	770	1,100	1,380	1,960
1-3/8	620	885	1,020	1,460	1,840	2,630
1-1/2	740	1060	1,220	1,750	2,200	3,150
1-5/8	1010	1450	1,670	2,390	3,020	4,310
1-3/4	1320	1890	2,180	3,110	3,930	5,610
1-7/8	1630	2340	2,930	4,190	5,280	7,550
2	1900	2720	3,150	4,500	5,670	8,100
2-1/4	2180	3120	4,550	6,500	8,200	11,710
2-1/2	3070	4380	5,000	7,140	11,350	16,210
2-3/4	5120	7320	8,460	12,090	15,710	22,440
3	6620	9460	11,040	15,770	19,900	28,440

Table 6 — Bolt Torque Requirements, Foot Pounds (Metric Bolts)

BOLT SIZE (Metric)	CLASS 8.8		CLASS 10.9	
	Minimum	Maximum	Minimum	Maximum
M4	1.75	2.5	2.5	3.5
M6	6	9	8	12
M8	14	20	20	30
M10	28	40	40	57
M12	48	70	70	100
M16	118	170	170	240
M20	230	330	330	470
M24	400	570	570	810
M27	580	830	820	1175

Table 7 — O-ring Face Seal Torque Requirements

TUBE SIZE (in.)	ORS WRENCH	MINIMUM N•m (ft-lb)	MAXIMUM N•m (ft-lb)
1/4	11/16	15.9 (11.7)	17.4 (12.8)
3/8	13/16	26.4 (19.5)	29.0 (21.4)
1/2	15/16	35.3 (26.0)	38.8 (28.6)
5/8	1-1/8	52.9 (39.0)	58.2 (42.9)

Check Chiller Tightness

Figure 23 outlines the proper sequence and procedures for leak testing.

The 19MV chillers are shipped with a full refrigerant charge. Units may be ordered with refrigerant shipped separately, along with 15 psig (103 kPa) nitrogen holding charge in each vessel.

To determine if there are any leaks, the unit should be charged with refrigerant. Use an electronic leak detector to check all flanges and solder joints after the chiller is pressurized. If any leaks are detected, follow the leak test procedure (page 26).

If the chiller is spring isolated, keep all springs blocked in both directions to prevent possible piping stress and damage during the transfer of refrigerant from vessel to vessel during the leak test process, or any time refrigerant is being transferred. Adjust the springs when the refrigerant is in operating condition and the water circuits are full.

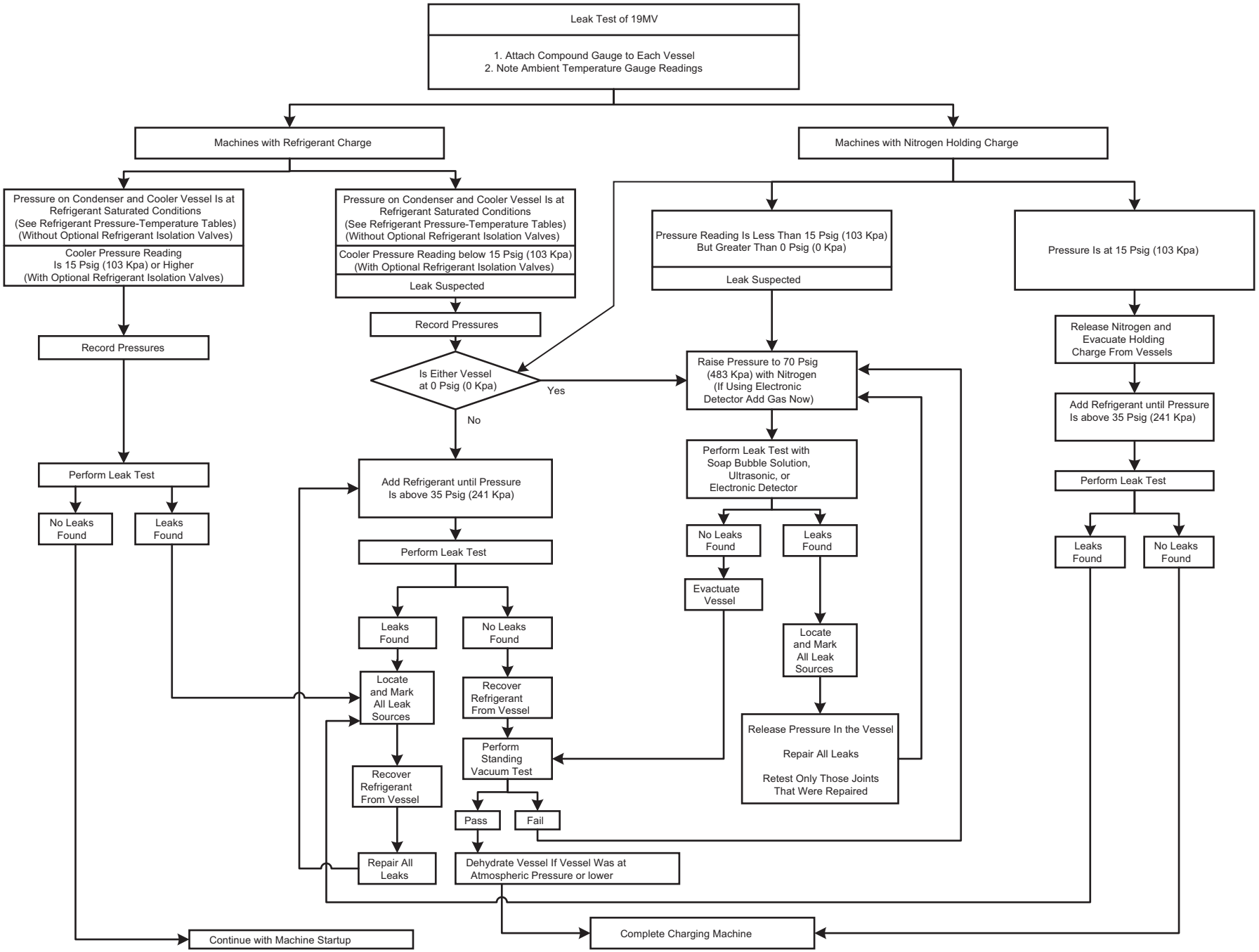

Fig. 23 — 19MV Leak Test Procedures

Leak Test Chiller

Due to regulations regarding refrigerant emissions and the difficulties associated with separating contaminants from the refrigerant, Carrier recommends the following leak test procedure. Refer to Tables 8 and 9 for refrigerant pressure/temperature values.

1. If the pressure readings are normal for the chiller condition:
   a. Evacuate the charge from the vessels, if present.
   b. Raise the chiller pressure, if necessary, by adding refrigerant until pressure is at the equivalent saturated pressure for the surrounding temperature.

⚠ CAUTION

Never charge liquid refrigerant into the chiller if the pressure in the chiller is less than 40 psig (277 kPa) for R-513A, less than 22 psig (153 kPa) for R-515B, or 22 psig (153 kPa) for R-1234ze(E). Charge as a gas only, with the cooler and condenser pumps running, until this pressure is reached. Flashing of liquid refrigerant at low pressures can cause tube freeze-up and considerable damage.

   c. Leak test chiller as outlined in Steps 3 to 7.
2. If the pressure readings are abnormal for the chiller condition:
   a. Prepare to leak test chillers shipped with refrigerant (Step 2h).
   b. Check for large leaks by connecting a nitrogen bottle and raising the pressure to 30 psig (207 kPa). Soap test all joints. If the test pressure holds for 30 minutes, prepare the test for small leaks (Steps 2g and 2h).
   c. Plainly mark any leaks that are found.
   d. Release the pressure in the system.
   e. Repair all leaks.
   f. Retest the joints that were repaired.
   g. After successfully completing the test for large leaks, remove as much nitrogen, air, and moisture as possible, given the fact that small leaks may be present in the system. Follow the dehydration procedure outlined in the section "Chiller Dehydration" on page 29.
   h. Slowly raise the system pressure to a maximum of 160 psig (1103 kPa) but no less than 35 psig (241 kPa) for R-513A/R-515B/R-1234ze(E) by adding refrigerant (below 35 psig refrigerant must be added as a gas). Proceed with the test for small leaks (Steps 3 to 9).
3. Check the chiller carefully with an electronic leak detector or soap bubble solution.
4. Leak Determination — If an electronic leak detector indicates a leak, use a soap bubble solution, if possible, to confirm. Total all leak rates for the entire chiller. Leakage at rates greater than 0.1% of the total charge per year must be repaired. Note the total chiller leak rate on the start-up report.
5. If no leak is found during the initial start-up procedures, complete the transfer of refrigerant gas from the storage tank to the chiller. Retest for leaks.
6. If no leak is found after a retest:
   a. Transfer the refrigerant to the storage tank and perform a standing vacuum test as outlined in the section "Standing Vacuum Test" on page 28.
   b. If the chiller fails the standing vacuum test, check for large leaks (Step 2b).
   c. If the chiller passes the standing vacuum test, dehydrate the chiller. Follow the procedure in the section "Chiller Dehydration" on page 29. Charge the chiller with refrigerant.
7. If a leak is found after a retest, pump refrigerant back into storage tank or, if isolation valves are present, pump refrigerant into the non-leaking vessel. See the section See "PUMPOUT AND REFRIGERANT TRANSFER PROCEDURES" on page 40.
8. Transfer the refrigerant until the chiller pressure is at 18 in. Hg (40 kPa absolute).
9. Repair the leak and repeat the procedure, beginning from Step 2h, to ensure a leak-tight repair. (If the chiller is opened to the atmosphere for an extended period, evacuate it before repeating the leak test.)

NOTE: Alternate optional leak testing method is to isolate the water circuits and use a portable water heater to raise the temperature of the evaporator and condenser water circuits to approximately 100°F (38°C) which corresponds to a pressure of approximately 125 psig (860 kPa).

Table 8 — Pressure (psig) — Temperature (°F)

TEMPERATURE	R-513A	R-515B	R-1234ze(E)
°F	psig	psig	psig
0	9.5783	0.74274	0.78014
2	10.684	1.4956	1.5346
4	11.829	2.2769	2.3176
6	13.013	3.0875	3.1299
8	14.238	3.9282	3.9724
10	15.504	4.7996	4.8456
12	16.813	5.7025	5.7505
14	18.165	6.6378	6.6877
16	19.562	7.6061	7.6581
18	21.004	8.6084	8.6625
20	22.492	9.6453	9.7016
22	24.028	10.718	10.776
24	25.611	11.826	11.887
26	27.244	12.972	13.036
28	28.928	14.156	14.222
30	30.662	15.379	15.447
32	32.449	16.641	16.712
34	34.289	17.944	18.017
36	36.184	19.288	19.364
38	38.134	20.674	20.754
40	40.140	22.104	22.186
42	42.204	23.577	23.663
44	44.327	25.096	25.184
46	46.509	26.660	26.751
48	48.751	28.270	28.366
50	51.056	29.929	30.027
52	53.424	31.636	31.738
54	55.855	33.392	33.498
56	58.352	35.199	35.308
58	60.915	37.057	37.170
60	63.545	38.967	39.085
62	66.244	40.931	41.052
64	69.012	42.948	43.074
66	71.852	45.021	45.151
68	74.763	47.150	47.285
70	77.747	49.336	49.476
72	80.806	51.581	51.725
74	83.940	53.884	54.033
76	87.151	56.247	56.401
78	90.440	58.672	58.831
80	93.808	61.159	61.323
82	97.256	63.709	63.878
84	100.790	66.323	66.498
86	104.400	69.002	69.183
88	108.100	71.748	71.935
90	111.880	74.561	74.754
92	115.750	77.442	77.641
94	119.700	80.393	80.599
96	123.750	83.415	83.627
98	127.890	86.508	86.726
100	132.120	89.674	89.899
102	136.440	92.914	93.146
104	140.850	96.229	96.468
106	145.370	99.620	99.867
108	149.980	103.090	103.340
110	154.680	106.640	106.900
112	159.490	110.260	110.530
114	164.400	113.970	114.250
116	169.420	117.760	118.040
118	174.530	121.630	121.920
120	179.760	125.590	125.890
122	185.090	129.630	129.940
124	190.530	133.760	134.080
126	196.080	137.970	138.300
128	201.740	142.280	142.620
130	207.520	146.670	147.020
132	213.410	151.160	151.520
134	219.420	155.740	156.110
136	225.550	160.420	160.800
138	231.800	165.190	165.580
140	238.170	170.060	170.450

Table 9 — Pressure (kPa) — Temperature (°C)

TEMPERATURE	R-513A	R-515B	R-1234ze(E)
C	kPA	kPA	kPA
-17.8	66.04	5.12	5.38
-16.7	73.67	10.31	10.58
-15.6	81.56	15.70	15.98
-14.4	89.72	21.29	21.58
-13.3	98.17	27.08	27.39
-12.2	106.90	33.09	33.41
-11.1	115.93	39.32	39.65
-10.0	125.25	45.77	46.11
-8.9	134.88	52.44	52.80
-7.8	144.82	59.35	59.73
-6.7	155.08	66.50	66.89
-5.6	165.67	73.90	74.30
-4.4	176.59	81.54	81.96
-3.3	187.85	89.44	89.88
-2.2	199.46	97.61	98.06
-1.1	211.41	106.04	106.51
0.0	223.74	114.74	115.23
1.1	236.42	123.72	124.23
2.2	249.49	132.99	133.51
3.3	262.93	142.55	143.10
4.4	276.77	152.41	152.97
5.6	291.00	162.56	163.16
6.7	305.63	173.04	173.64
7.8	320.68	183.82	184.45
8.9	336.14	194.92	195.58
10.0	352.03	206.36	207.04
11.1	368.36	218.13	218.83
12.2	385.12	230.24	230.97
13.3	402.34	242.70	243.45
14.4	420.01	255.51	256.29
15.6	438.14	268.68	269.49
16.7	456.75	282.22	283.05
17.8	475.84	296.13	297.00
18.9	495.42	310.42	311.32
20.0	515.49	325.10	326.03
21.1	536.07	340.17	341.14
22.2	557.16	355.65	356.64
23.3	578.77	371.53	372.56
24.4	600.91	387.82	388.88
25.6	623.58	404.54	405.64
26.7	646.81	421.69	422.82
27.8	670.58	439.27	440.44
28.9	694.95	457.30	458.50
30.0	719.84	475.77	477.02
31.1	745.35	494.70	495.99
32.2	771.41	514.10	515.43
33.3	798.10	533.96	535.33
34.4	825.33	554.31	555.73
35.6	853.26	575.15	576.61
36.7	881.80	596.47	597.98
37.8	910.97	618.30	619.85
38.9	940.75	640.64	642.24
40.0	971.16	663.50	665.15
41.1	1002.33	686.88	688.58
42.2	1034.11	710.81	712.53
43.3	1066.52	735.28	737.08
44.4	1099.68	760.24	762.10
45.6	1133.54	785.82	787.75
46.7	1168.15	811.96	813.89
47.8	1203.38	838.64	840.64
48.9	1239.45	865.94	868.01
50.0	1276.20	893.80	895.94
51.1	1313.70	922.28	924.48
52.2	1351.97	951.30	953.58
53.3	1391.00	981.02	983.36
54.4	1430.85	1011.29	1013.70
55.6	1471.46	1042.25	1044.73
56.7	1512.90	1073.83	1076.38
57.8	1555.17	1106.10	1108.72
58.9	1598.26	1138.99	1141.67
60.0	1642.18	1172.56	1175.25

Standing Vacuum Test

When performing the standing vacuum test or chiller dehydration, use a manometer or a wet bulb indicator. Dial gauges cannot indicate the small amount of acceptable leakage during a short period of time.

1. Attach an absolute pressure manometer or wet bulb indicator to the chiller.
2. Evacuate the vessel to at least 18 in. Hg vac (41 kPa [abs]), using a vacuum pump or a pumpout unit.
3. Valve off the pump to hold the vacuum and record the manometer or indicator reading.
   a. If the leakage rate is less than 0.05 in. Hg (0.17 kPa) in 24 hours, the chiller is sufficiently tight.
   b. If the leakage rate exceeds 0.05 in. Hg (0.17 kPa) in 24 hours, re-pressurize the vessel and test for leaks.
4. Repair the leak, retest, and proceed with dehydration.

Check the Installation

Use the following instructions to verify the condition of the installation. Note that the contractor should not apply power to the chiller before the Carrier Start-up Technician arrives at the job site.

1. Inspect the water piping to the chiller to confirm it is correct. Confirm it is adequately supported from the chiller and there are isolation valves installed.
2. Turn off, lock out, and tag the input power to the unit.
3. Power should not have been applied to the VFD at this point, but if it was, wait a minimum of 8 minutes (for Danfoss Drive) for the DC bus to discharge.
4. All wiring should be installed in conformance with applicable local, national, and international codes (e.g., NEC/CSA).
5. Remove any debris, such as metal shavings, from enclosure.
6. Check that there is adequate clearance around the machine.
7. Verify that the wiring to the terminal strip and the power terminals is correct and that no external voltage potential is connected to any of the inputs.
8. Verify that all of the VFD power module circuit board connectors are fully engaged and taped in place.
9. Check that the field-installed wire size is within terminal specifications and that the wires are tightened properly and adequately supported. Confirm the field wiring is copper composition and not aluminum.
10. Check that specified branch circuit protection is installed and correctly rated.
11. Check that the incoming power is within ±10% of chiller nameplate voltage.
12. Verify that a properly sized ground wire is installed and a suitable earth ground is used. Check for and eliminate any grounds between the power leads. Verify that all ground leads are unbroken to the power supply. Only a wye secondary power supply transformer with solidly grounded neutral is acceptable as a power supply to this chiller. If a ground wire is not present or the transformer secondary is any other type than a wye with solidly grounded delta, please contact the Technical Service Manager or Service Engineering.
13. Confirm the electrolytic capacitors located in the VFD do not require reforming before applying power to the unit. This verification is only required if the unit has not had power applied for less than 1 year before startup. Check specific VFD manufacturer for reformation time limits for the capacitors.

Inspect Wiring

⚠ WARNING

Do not check the voltage supply without proper equipment and precautions. Serious personal injury may result. Follow power company recommendations.

⚠ CAUTION

Do not apply any kind of test voltage, even for a rotation check, if the chiller is under a dehydration vacuum. Insulation breakdown and serious damage may result.

⚠ WARNING

Do not apply power unless a qualified Carrier technician is present. Serious personal injury may result.

1. Examine the wiring for conformance to the job wiring diagrams and all applicable electrical codes.
2. Ensure that the VFD is protected by fused disconnects or circuit breakers as per electrical code.
3. Compare the ampere rating on the VFD nameplate to rating on the compressor nameplate.
4. Check that there is adequate service clearance around the machine.
5. Check that specified branch circuit protection is installed and correctly rated.
6. Ensure there is capability to turn off, lock out, and tag the input power to the drive.
7. If power is applied to the drive then wait for the DC bus to discharge and check DC bus voltage prior to starting any work. FC-102 drives have a label that indicates the capacitor discharge time dependent on drive sizes.
8. Inspect the control panels and VFD enclosure to ensure that the contractor has used the knockouts or provided top hat to feed the wires into the enclosures. Generally, wiring into the top of the enclosures can allow debris to fall into the enclosures. Clean and inspect the interior of the power panel and VFD enclosure if this has occurred. If metal particulate has fallen into the rectifier or inverter assemblies contact Service Engineering or your Technical Service Manager for further instructions.
9. Check that the incoming power is within ±10% of chiller nameplate voltage.
10. Check that the room environmental conditions match the chiller enclosure type. If the installation location does not have four walls and a roof, please contact the Technical Service Manager or Service Engineering.
11. Ensure the customer's contractor has verified proper operation of the pumps, cooling tower fans, and associated auxiliary equipment. This includes ensuring motors are properly lubricated and have proper electrical supply and proper rotation. The chiller or the building automation system must be capable of establishing water flow when the unit is in operation or off line for the freeze protection algorithm in the chiller controls to be effective. Pump control must be maintained for freeze protection algorithm.
12. Verify that the incoming source does not exceed the SCCR (short circuit current rating) of the equipment marking.
13. Ensure all electrical equipment and controls are properly grounded in accordance with the job drawings, certified drawings, and all applicable electrical codes.

Chiller Dehydration

Dehydration is required if the chiller was shipped with a nitrogen charge or has been open for a considerable period of time, if the chiller is known to contain moisture, or if there has been a complete loss of chiller holding charge or refrigerant pressure.

⚠ CAUTION

Do not start or megohm-test the compressor motor or any other pump motor, even for a rotation check, if the chiller is under dehydration vacuum. Insulation breakdown and severe damage may result.

⚠ WARNING

Power to the motor and VFD must be disconnected by an isolation switch before placing the machine under a vacuum. To be safe, isolate input power before evacuating the chiller if you are not sure if there are live leads to the hermetic motor.

Dehydration can be done at room temperatures. Using a cold trap (Fig. 24) may substantially reduce the time required to complete the dehydration and is recommended should the unit be exposed to liquid moisture. The higher the room temperature, the faster dehydration takes place. At low room temperatures, a very deep vacuum is required to boil off any moisture and heating of the water in the water circuits of the chiller to approximately 100°F (38°C) may be required.

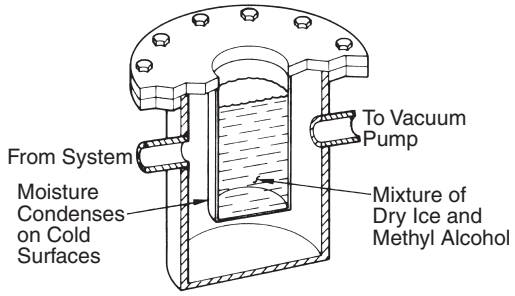

Fig. 24 — Dehydration Cold Trap

Perform dehydration as follows:

1. Connect a high capacity vacuum pump (5 cfm [.002 m^3/s] or larger is recommended) to the refrigerant vacuum/charging valve (Fig. 2). Tubing from the pump to the chiller should be as short in length with a minimum diameter of 0.5 in. (13 mm) and as large in diameter as possible to provide least resistance to gas flow.
2. Use an absolute pressure manometer or a electronic micron gauge to measure the vacuum. Open the shutoff valve to the vacuum indicator only when taking a reading. Leave the valve open for 3 minutes to allow the indicator vacuum to equalize with the chiller vacuum.
3. If the entire chiller is to be dehydrated, open all isolation valves (if present).
4. With the chiller ambient temperature at 60°F (15.6°C) or higher, operate the vacuum pump until the manometer reads 185 psig (1275 kPa), or a vacuum indicator reads 35°F (1.7°C). Operate the pump an additional 2 hours.
5. Do not apply a greater vacuum than 29.73 in. Hg vac (755.1 mm Hg) or go below 33°F (0.56°C) on the wet bulb vacuum indicator. At this temperature and pressure, isolated pockets of moisture can turn into ice. The slow rate of evaporation (sublimation) of ice at these low temperatures and pressures greatly increases dehydration time.
6. Valve off the vacuum pump, stop the pump, and record the instrument reading.
7. After a 2-hour wait, take another instrument reading. If the reading has not changed, dehydration is complete. If the reading indicates vacuum loss, repeat Steps 4 and 5.
8. If the reading continues to change after several attempts, perform a leak test (maximum 160 psig [1103 kPa] pressure). Locate and repair the leak, and repeat dehydration.
9. Once dehydration is complete, the evacuation process can continue. The final vacuum prior to charging the unit with refrigerant should in all cases be 29.9 in. Hg (500 microns, 0.07 kPa [abs]) or less.

Inspect Water Piping

Refer to piping diagrams provided in the certified drawings and the piping instructions in the 19MV Installation Instructions manual. Inspect the piping to the evaporator and condenser. Be sure that the flow directions are correct and that all piping specifications have been met.

Piping systems must be properly vented with no stress on waterbox nozzles and covers. Water flows through the evaporator and condenser must meet job requirements. Measure the pressure drop across the evaporator and the condenser.

⚠ CAUTION

Water must be within design limits, clean, and treated to ensure proper chiller performance and to reduce the potential of tube damage due to corrosion, scaling, or erosion. Carrier assumes no responsibility for chiller damage resulting from untreated or improperly treated water.

Check Safety Valves

Be sure safety valves have been piped to the outdoors in compliance with the latest edition of ANSI/ASHRAE Standard 15 and applicable local safety codes. Piping connections must allow for access to the valve mechanism for periodic inspection and leak testing.

The standard 19MV relief devices are set to relieve at 185 psig (1275 kPa) chiller design pressure.

Ground Fault Troubleshooting

Follow this procedure only if ground faults are declared by the chiller controls. Test the chiller compressor motor and its power lead insulation resistance with a 500-v insulation tester such as a megohmmeter.

1. Open the VFD main disconnect switch and follow lockout/tagout rules.

⚠ CAUTION

The motor leads must be disconnected from the VFD before an insulation test is performed. The voltage generated from the tester can damage the VFD.

2. Perform test 1: For 3-lead motor, tie terminals 1, 2, and 3 together and test between the group and ground.
   a. With tester connected to motor leads, take 10-second and 60-second megohm readings.
   b. Divide 60-second resistance reading by the 10-second reading. The ratio, or polarization index, must be one or higher. Both the 10 and 60-second readings must be at least 50 megohms. If the readings are unsatisfactory, repeat the test at the motor with the power leads disconnected. Satisfactory readings in this second test indicate the fault is in the power leads.
3. Perform test 2: Only perform this test if the unit has been disassembled at the job site, if the starter has been removed, if experiencing ground fault alarm with the VFD, or during annual maintenance.

Perform a megohm test from each terminal to ground. The megohm value should be greater than 20 megohm. Note that if a megohm test is performed between the terminals it will show a direct short and is not a valid test because of the 3 terminal motor internal delta configuration.

Carrier Comfort Network Interface

The Carrier Comfort Network® (CCN) communication bus wiring is supplied and installed by the electrical contractor. It consists of shielded, 3-conductor cable with drain wire.

The system elements are connected to the communication bus in a daisy chain arrangement. The positive pin of each system element communication connector must be wired to the positive pins of the system element on either side of it. The negative pins must be wired to the negative pins. The signal ground pins must be wired to the signal ground pins. See installation manual.

NOTE: Conductors and drain wire must be 20 AWG (American Wire Gauge) minimum stranded, tinned copper. Individual conductors must be insulated with PVC, PVC/nylon, vinyl, PTFE (PolyTetraFluoroEthylene), or polyethylene. An aluminum/polyester 100% foil shield and an outer jacket of PVC, PVC/nylon, chrome vinyl, or PTFE with a minimum operating temperature range of –4°F to 140°F (–20°C to 60°C) is required. See Table 10 for cables that meet the requirements.

Table 10 — Manufacturers and Cable Numbers

MANUFACTURER	CABLE NO.
ALPHA	2413 or 5643
AMERICAN	A22503
BELDEN	8772
COLUMBIA	02525

When connecting the CCN communication bus to a system element, a color code system for the entire network is recommended to simplify installation and checkout. The color code shown in Table 11 is recommended.

Table 11 — Recommended Color Code

SIGNAL TYPE	CCN BUS CONDUCTOR INSULATION COLOR	CCN TERMINAL CONNECTION
+	Red	Red (+)
GROUND	Black	Black (G)
–	White	White (–)

⚠ WARNING

BE AWARE that certain automatic start arrangements *can engage the starter*. Open the disconnect *ahead* of the starter in addition to shutting off the chiller or pump. Failure to follow this procedure may result in personal injury by electric shock.

⚠ WARNING

The main disconnect on the starter front panel may not de-energize all internal circuits. Open all internal and remote disconnects before servicing the starter. Failure to follow this procedure may result in personal injury by electric shock.

Charge Refrigerant into Chiller

⚠ CAUTION

The transfer, addition, or removal of refrigerant in spring isolated chillers may place severe stress on and damage external piping if springs have not been blocked in both up and down directions.

⚠ CAUTION

Always operate the condenser and chilled water pumps during charging operations to prevent freeze-ups.

The standard chiller is shipped with the refrigerant already charged in the vessels. However, the chiller may be ordered with a nitrogen holding charge of 15 psig (103 kPa). Evacuate the nitrogen from the entire chiller, and charge the chiller from refrigerant cylinders. The full refrigerant charge in the 19MV chiller will vary with chiller components and design conditions. An approximate charge may be determined by adding the condenser, evaporator, and economizer charge (as applicable). Obtain refrigerant charge information from unit nameplate or from sales documents/E-Cat.

CHILLER EQUALIZATION WITHOUT A PUMPOUT UNIT

⚠ CAUTION

When equalizing refrigerant pressure on the 19 series chiller after service work or during the initial chiller start-up, *do not use the discharge isolation valve to equalize.* A charging hose (connected between the charging valves on top of the cooler and condenser) should be used as the equalization valve. Failure to follow this procedure may damage equipment.

The following steps describe how to equalize refrigerant pressure in an isolated chiller without a pumpout unit.

1. Use Quick Test to access cooler and condenser pump control.

IMPORTANT: Turn on the chilled water and condenser water pumps to prevent freezing.

2. Connect a charging hose between the charging valves on top of the evaporator and condenser. Slowly open the refrigerant charging valves. The chiller cooler and condenser pressures will gradually equalize. This process takes approximately 15 minutes.
3. Once the pressures have equalized, the cooler isolation valve and the condenser isolation valve may now be opened.

TRIMMING REFRIGERANT CHARGE

The 19 Series chiller is shipped with the correct charge for the design duty of the chiller. Trimming the charge can best be accomplished when the design load is available. To trim the charge, check the temperature difference between the leaving chilled water temperature and cooler refrigerant temperature at full load design conditions. If necessary, add or remove refrigerant to bring the temperature difference to design conditions or minimum differential. Obtain refrigerant charge information from unit nameplate or from sales documents/E-Cat. The two sight glasses on the condenser identify the correct level in the condenser; for the oil lubricated units, the sight glass in the oil reclaim circuit located between the cooler and suction housing can be used for refrigerant flow confirmation.

Software Configuration

⚠ WARNING

Do not operate the chiller before the control configurations have been checked and a Calibration and Control Test has been satisfactorily completed. Protection by safety controls cannot be assumed until all control configurations have been confirmed.

See the 19MV with PIC6 Controls Operation and Troubleshooting manual for instructions on using the PIC6 interface to

configure the 19MV unit. As the unit is configured, all configuration settings should be written down. A log, such as the one shown starting on page CL-1, provides a list for configuration values.

Perform MBC Calibration and Clearance Checks

The initial calibration of the active magnetic bearings is performed before the chiller is shipped from the Carrier facility. If it becomes necessary to recalibrate, then select the Motor-Compressor icon on the home screen, then press the up arrow to navigate to the MBC status page. Under "MBC Calibration" select the "start calibration" icon. See Fig. 25 and 26. The status of the calibration process will be displayed beneath the button. The results of the calibration are displayed on the calibration screen as well as saved to the MBC flash memory. The calibration process is done while the bearings are not levitated. It moves the shaft at high force around the available clearance.

Fig. 25 — MBC Status Page

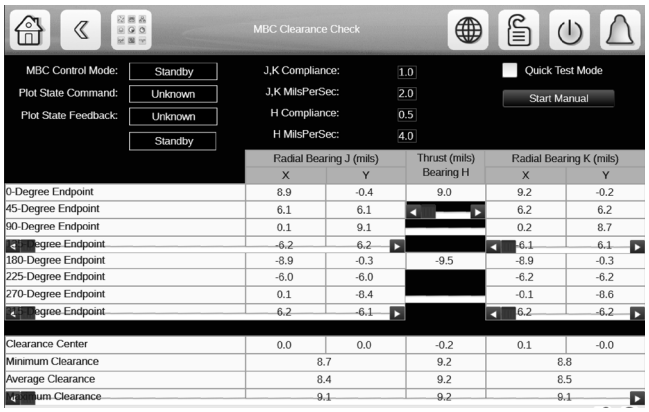

Fig. 26 — MBC Calibration Screen

The first calibration will be performed in the chiller factory. In the field MBC calibration is required when:

- After replacement of MBC
- After replacement of magnetic bearing, aux bearing, or amplifier components.
- If PIC6 displays an Average-Gap-Change warning.

NOTE: Calibration cannot be performed if chiller is in vacuum condition. Quick test function must be enabled to perform a calibration.

The MBC performs clearance checks with the shaft levitated. It will check radially in 8 directions and axially forward and backward. Recorded changes are a measure of the health/wear of the auxiliary bearings. A manual clearance check can be performed by selecting "MBC Clearance Check" from the MBC Status screen. The clearance check is initiated when the "Start Manual" icon is selected in the MBC Clearance Check screen (Fig. 26).

Note that Quick Test must be Enabled in order complete a MBC clearance test or MBC calibration.

Clearance checks needs to be performed, recorded, and included in commissioning paperwork for baseline purpose when:

- Unit is commissioned (base line purpose)
- If the MBC registers a drop of the rotor

The PIC will automatically initiate a clearance check upon unit startup if:

- An increase in the shaft drop count is detected
- The speed sensor option is disabled
- The unit is configured for the option "clearance check on startup"

The MBC Clearance Check screen contains information of the data captured from the clearance check procedure. Radial Bearing J is the first stage end radial magnetic bearing (RMB). The H bearing is the thrust magnetic bearing (TMB) located on the first stage end. Finally, the K bearing is the second stage radial magnetic bearing.

Check Motor Cooling Valves

Before initial startup verify that the two isolation valves on either side of the filter drier and moisture indicator are in the open position. On initial startup monitor the motor winding temperatures to verify proper cooling.

EXV Strainer Refrigerant Isolation Valves

Before startup, confirm the two refrigerant isolation valves for the EXV strainer are open.

Compressor Discharge Isolation Valve (19MVR Units)

Confirm this optional refrigerant isolation valve is open before starting the compressor or catastrophic damage to the compressor will occur.

UPS

The UPS is shipped from the factory with the battery disconnected. When power is available for charging the battery, open the high voltage section of the power panel and remove the cover of the UPS by pulling it outwards (Fig. 27). Once cover is removed connect red wires to the red plug and black wires to the black plug. The battery requires 12 hours to fully charge.

After periods of storage or inactivity, the UPS battery may reduce in charge. Before initial startup, apply power to the UPS, observe charge level, and, if necessary, allow UPS to charge fully before attempting startup.

NOTE: It may take up to 12 hours to fully charge the UPS batteries. Manufacturer's estimated UPS shelf life is 6 months.

NOTE: If battery is replaced, it should be logged in the UPS menu located in the Configuration Menu. A battery replacement alert or alarm will be cleared once the replacement is logged.

Refrigerant Tracer

Carrier recommends the use of an environmentally acceptable refrigerant tracer for leak testing with an electronic refrigerant detector. Ultrasonic leak detectors can also be used if the chiller is under pressure.

NOTE: If the unit is charged with refrigerant from the factory and there is pressure on the unit, a leak check can be performed with no other actions.

⚠ WARNING

Do not use air or oxygen as a means of pressurizing the chiller. Mixtures of air with R-513A, R-515B, or R-1234ze(E) refrigerant can undergo combustion, resulting in equipment damage and possible personal injury.

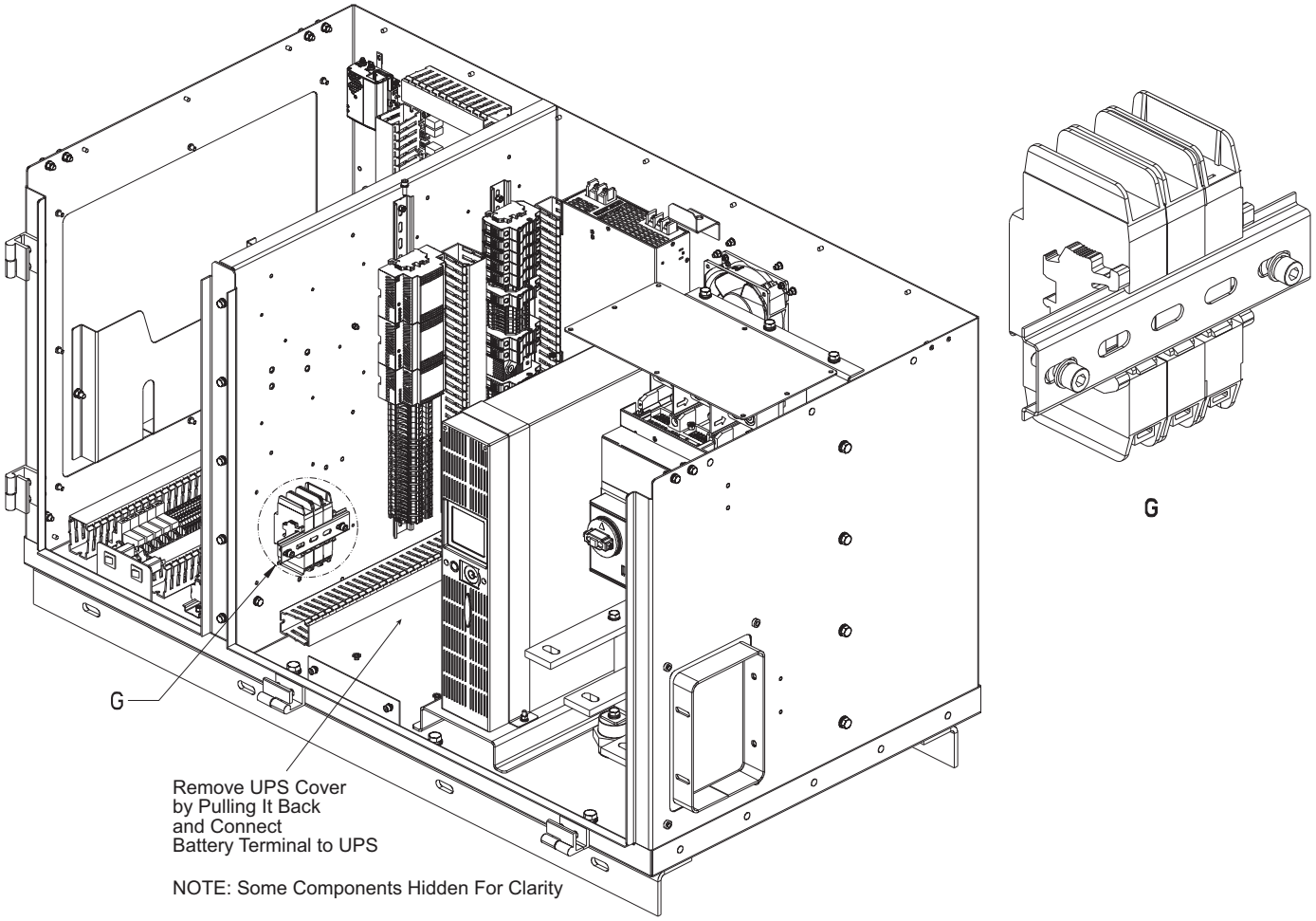

Fig. 27 — UPS Cover Location

HOME SCREEN

The home screen is the first screen shown after switching the unit on. See Fig. 28. Note the Globe and Lock icons.

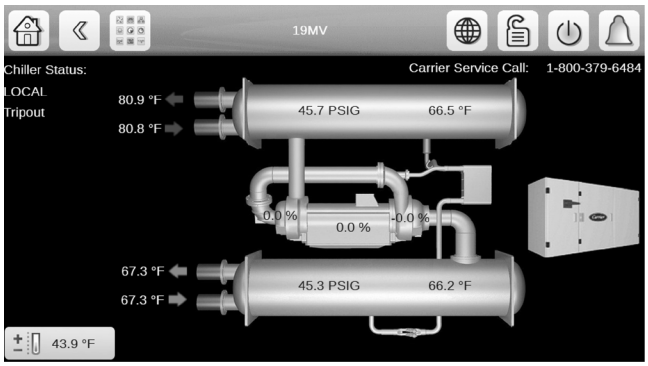

Fig. 28 — Home Screen

The Globe icon on the Home screen allows access to language and measurement settings. See Fig. 29.

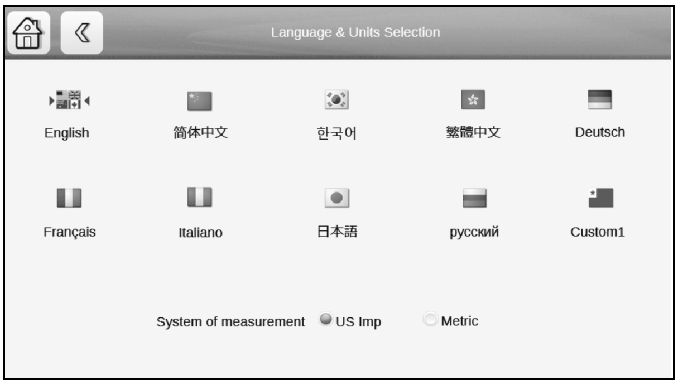

Fig. 29 — Language and Units Selection Screen

NOTE: The flags shown are not all supported. Contact chiller marketing to learn about current language status.

The Lock icon on the Home screen allows access to the password menu and displays current software version. See Fig. 30.

Fig. 30 — Login Screen

CHANGE THE SET POINTS

To access the set point screen, press the lock icon on the Main Menu. In the User Login menu, enter the password (default USER password = 1111), and click accept. The screen will then default back to the home screen. See Fig. 28. The Service Login access is reserved for access to equipment service tables.

The Main Menu screen is displayed. See Fig. 31 and 32. Press the Setpoint Table icon.

Fig. 31 — Main Menu, Page 1

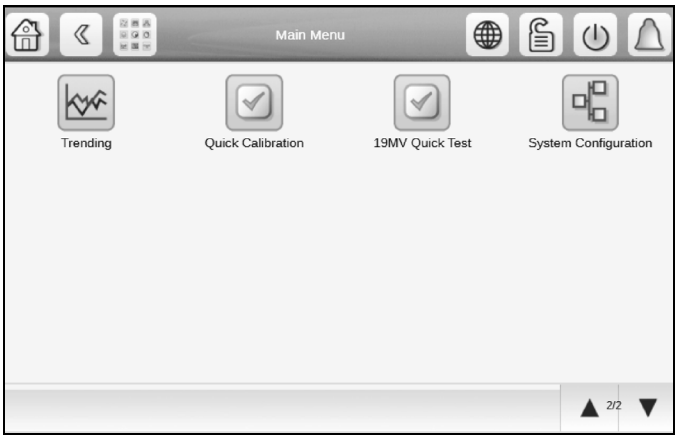

Fig. 32 — Main Menu, Page 2

The Setpoint screen is displayed. See Fig. 33. Set the base demand limit, and either the LCW set point or the ECW set point. To set a value, press the appropriate set point, enter the value, and press OK. For more information, see the PIC6 Control User Manual.

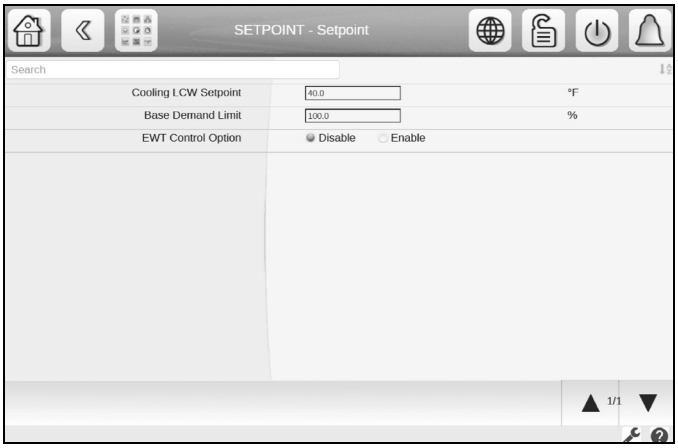

Fig. 33 — Setpoint Menu

INPUT THE LOCAL OCCUPIED SCHEDULE

Access the schedule menu (***Main Menu→Configuration Menu →Schedule Menu***) and set up the occupied time schedule according to the customer's requirements. If no schedule is available, the default is factory set for 24 hours occupied, 7 days per week including holidays. When the control mode is LOCAL SCHEDULE, the chiller will be automatically started if the configured local schedule is occupied and will be automatically shut down by the unoccupied schedule.

The Network Schedule should be configured if a CCN system is being installed. When control mode is NETWORK, the chiller can be started and stopped by the CHIL_S_S software point as written by other equipment through the network command and network schedule. The Schedule Menu contains a table to set the Network Schedule if required. For more information about setting time schedules, please refer to the PIC6 Control User Manual.

INPUT SERVICE CONFIGURATIONS

See Fig. 34 and 35 for 19MV Configuration Tables. For specific values for the following configurations, refer to the chiller performance data or job-specific data sheet:

1. Password
2. Log in/log out
3. Input time and date
4. Service parameters
5. Equipment configuration
6. Automated control quick test

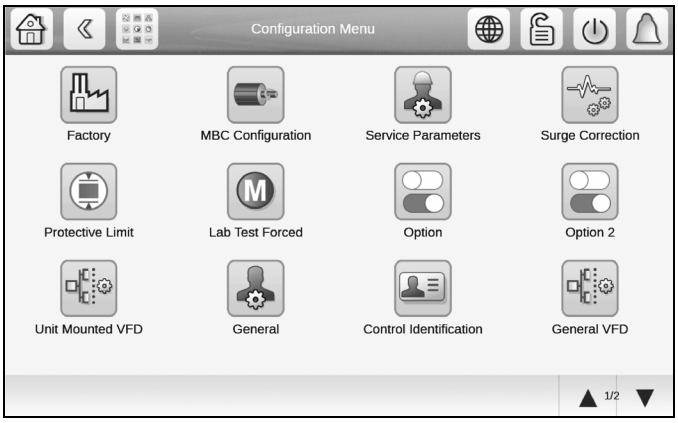

Fig. 34 — 19MV Configuration Tables, Page 1 (Factory Login View)

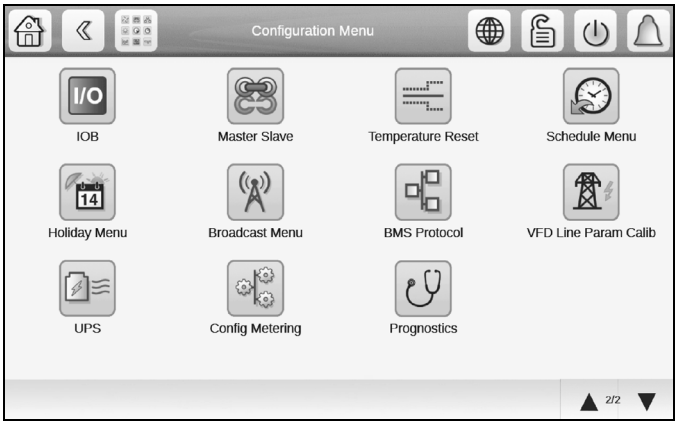

Fig. 35 — 19MV Configuration Tables, Page 2 (Factory Login View)

PASSWORD

A user password must be entered to access the Set Point or other common user tables. See Fig. 36. User password can be changed from the General Configuration Menu. USER CONFIGURATION allows change of the User access password. The default User password is 1111.

IMPORTANT: Be sure to remember the password. Retain a copy for future reference. Without the user password, access will not be possible unless accessed by a Carrier representative. Factory password is required to enter configuration menus required for chiller setup.

A 7-day access code to Service tables can be granted by Admin. Access to Factory tables requires deciphering of a QR code by authorized user of the Carrier SMARTService® app. The password changes periodically and ensures that only authorized users can adjust key product configuration and maintenance data.

Service and Factory login icon becomes visible after 72 hours of PIC6 HMI power-up followed by a power cycle. Up to this point the controller will accept "4444".

For customers who require full access to the PIC6 controller, the controller can be configured for "Special User Login" mode, which disables the QR code requirement for Factory tables and replaces it with a static ten-digit password.

NOTE: This option reduces the cybersecurity protection of the chiller controls.

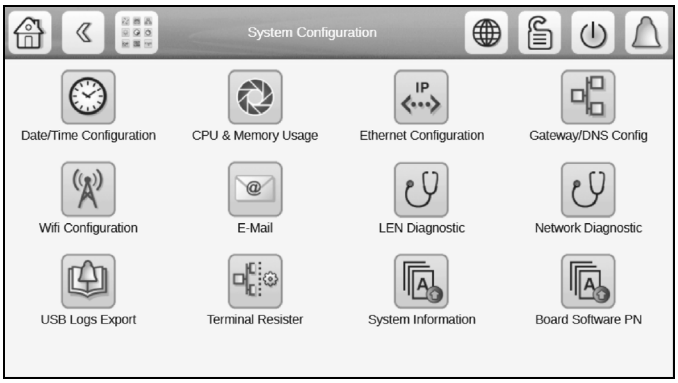

Fig. 36 — 19MV Config Tables

INPUT TIME AND DATE

Set day and time and, if applicable, holidays through MAIN MENU SYSTEM CONFIGURATION and then select Date/Time Configuration. See the Controls Operation and Troubleshooting guide for details. Because a schedule is integral to the chiller control sequence, the chiller will not start until the time and date have been set.

MODIFY CONTROLLER IDENTIFICATION IF NECESSARY

The CCN address can be changed from the Configuration Menu. Change this address under CONTROL IDENTIFICATION for each chiller if there is more than one chiller at the jobsite. Write the new address on the PIC6 Touch Screen module for future reference.

CONFIGURE TABLES

Access the related tables through MAIN MENU CONFIGURATION MENU (Fig. 34) to modify or view job site parameters shown in 19MV Configuration tables. Consult chiller nameplates as indicated. For a complete list of parameters, consult the 19MV Controls Operation and Troubleshooting Manual.

Field Set Up and Verification

IMPORTANT: Some parameters are specific to the chiller configuration and will need to be verified prior to operation. All command functions must be initiated from the HMI.

Use the HMI touch screen to confirm that VFD values match the chiller parameter labels and Chiller Builder design data sheet. Locate VFD values from ***Main Menu →Configuration Menu***.

LABEL LOCATIONS

Verify the following labels have been installed properly and match the chiller requisition:

- Surge Parameters — Located inside the HMI chiller control panel.
- Chiller identification nameplate — Located on the left side of the power panel. See Fig. 37.
- VFD Nameplate data - located on the right side of the VFD. See Fig. 37.

MODIFY EQUIPMENT CONFIGURATION IF NECESSARY

The EQUIPMENT SERVICE table has screens to select, view, or modify parameters. Carrier's certified drawings have the configuration values required for the jobsite. Modify these values only if requested. Modifications can include:

- Chilled water reset
- Entering chilled water control (Enable/Disable)
- 4 to 20 mA demand limit
- Frequent restart option (Enable/Disable)
- Remote contact option (Enable/Disable)

See the 19MV with PIC6 Controls Operation and Troubleshooting guide for more details about these functions; see the Control Panel Schematic for field wiring.

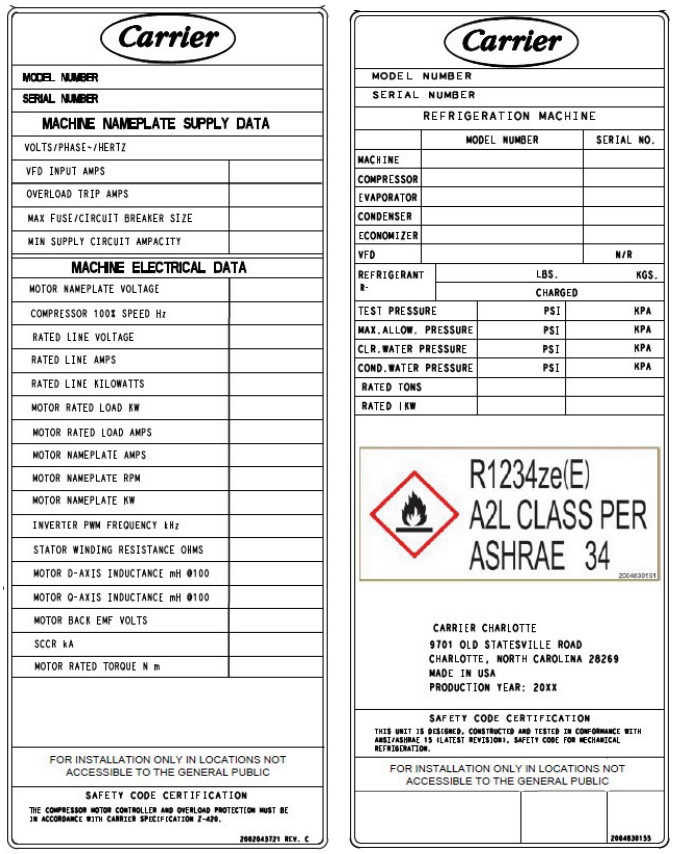

Fig. 37 — Machine Identification Nameplate and VFD Electrical Nameplate

Perform a Controls Test (Quick Test)

NOTE: The QUICK TEST screens can only be accessed when the chiller is in STOP mode.

Check the safety controls status by performing an automated controls test. First, perform a Quick Calibration Test (Path ***Main Menu → Quick Calibration***). This is required for all modulating analog actuators. Upon successful calibration, use Quick Test (***Main Menu → Quick Test***) to verify operation on desired components. Note that this is a very useful feature for troubleshooting. On the QUICK TEST table screen, select a test to be performed.

The Quick Test checks all outputs and inputs for proper functionality. In order to successfully proceed with the controls test, the compressor must be off with no alarms showing, and voltage should be within ±10% of rating plate value. If an error occurs, the operator can try to address the problem as the test is being done or note the problem and proceed to the next test.

When the controls test is finished the test stops and the QUICK TEST menu displays. If a specific automated test procedure is not completed, access the particular control test to test the function when ready. Disable Quick Test feature when testing is complete. For information about calibration, see the sections Checking Pressure Transducers, page 52, and High Altitude Locations, page 53.

OPTIONAL EVAPORATOR AND CONDENSER PRESSURE TRANSDUCER AND WATERSIDE FLOW DEVICE CALIBRATION

Pressure sensor calibration can be initiated from ***Main Menu → Maintenance Menu→Pressure Sensor Calib***. Calibration can be checked by comparing the pressure readings from the transducer to an accurate refrigeration gauge reading. The transducer can be checked and calibrated at 2 pressure points. These calibration points are 0 psig (0 kPa) and between 25 psig (173 kPa) and 250 psig (1724 kPa).

To calibrate these transducers:

1. Shut down compressor, evaporator, and condenser pumps.

   NOTE: There should be no flow through the heat exchangers.
2. Disconnect the transducer in question from its Schrader fitting for evaporator or condenser transducer calibration. For pump pressure or bearing pressure or flow device calibration keep transducer in place.

   NOTE: If the evaporator or condenser vessels are at 0 psig (0 kPa) or are open to atmospheric pressure, the transducers can be calibrated for zero without removing the transducer from the vessel.
3. Access the PRESSURE screen from the Main Menu and view the particular transducer reading (the evaporator pressure, condenser pressure, economizer pressure, pump inlet pressure, pump outlet pressure, bearing inlet pressure, bearing outlet pressure).
4. To calibrate a device, view the particular reading on the screen. It should read 0 psig (0 kPa). If the reading is not 0 but within 5 psig (35 kPa), the value may be set to zero while the appropriate transducer parameter is highlighted. The value will now go to zero. No high end calibration is necessary for flow devices. If the transducer value is not within the calibration range, the transducer will return to the original reading. If the pressure is within the allowed range (noted above), check the voltage ratio of the transducer. To obtain the voltage ratio, divide the voltage (dc) input from the transducer by the supply voltage signal (see Maintenance Others in Maintenance Menu) or measure across the positive (+ red) and negative (– black) leads of the transducer. The voltage ratio must be between 0.80 and 0.11 for the software to allow calibration. Rotate the waterside flow pressure device from the inlet nozzle to the outlet nozzle and repeat this step. If rotating the waterside flow device does not allow calibration then pressurize the transducer until the ratio is within range. Then attempt calibration again.
5. A high pressure point can be calibrated between 100 and 250 psig (689.5 and 1723.7 kPa) by attaching a regulated pressure source (usually from a nitrogen cylinder with high resolution pressure gauge). The high pressure point can be calibrated by accessing the appropriate transducer parameter on the PRESSURES screen, highlighting the parameter, then increasing or decreasing the value to the exact pressure on the refrigerant gauge.

Pressures at high altitude locations must be compensated for, so the chiller temperature/pressure relationship is correct. This is set in the Service Parameters (Configuration Menu).

The PIC6 does not allow calibration if the transducer is too far out of calibration. In this case, a new transducer must be installed and re-calibrated.

IMPORTANT: When screen display calibration is complete, do not press Calibration Enable/Dsable since the new values will be deleted. Values are kept by exiting the pressure sensor table.

OPTIONAL THERMAL DISPERSION FLOW SWITCH CALIBRATION

Set the flow through the water circuit to the minimum safe flow that will be encountered.

Reduce the sensitivity of the switch by turning the adjustment counter-clockwise until the yellow LED turns off. This indicates that the switch is now open.

Increase the sensitivity of the flow switch by turning the adjustment potentiometer clockwise until the yellow LED is lit.

In case of nuisance trips at low flow, increase the sensitivity of the switch by turning the potentiometer clockwise.

HYDRAULIC STATUS

The HYDRAULIC STATUS screen (access from the Main Menu) provides a convenient way to detect if any of the evaporator or condenser pressure devices (if installed) are in need of calibration. See Fig. 38-40 for the hydraulic status menu. With no flow the water delta should read 0 kPa. If it does not, the value may be set to zero using PRESSURE SENSOR CALIB located in the Maintenance Menu. See Fig. 41 for the pressure sensor calibration menu. High end calibration is not necessary. The water temperature sensors should also be calibrated during the commissioning of the chiller. The goal is to have the entering/leaving water temperature sensors displaying the same value when water is flowing and the chiller is not in operation.

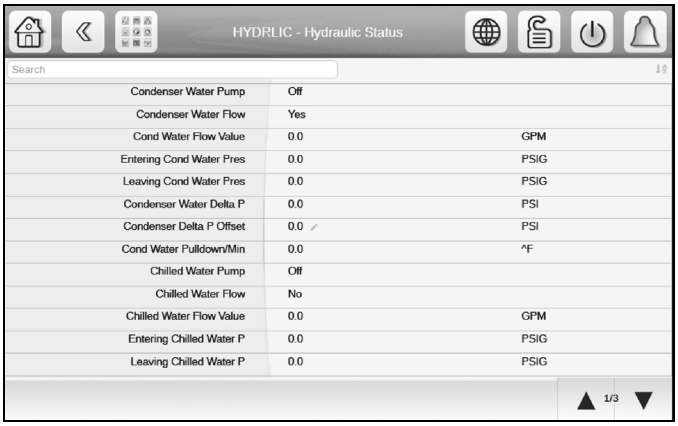

Fig. 38 — Hydraulic Status Menu, Page 1

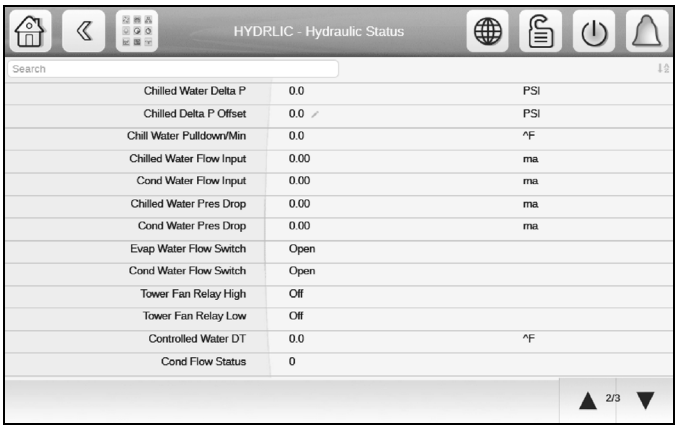

Fig. 39 — Hydraulic Status Menu, Page 2

Fig. 40 — Hydraulic Status Menu, Page 3

Fig. 41 — Pressure Sensor Calibration Menu

INITIAL START-UP

Preparation

Before starting the chiller, verify:

1. Power is on to the VFD, chiller control panel, water pumps, and other equipment as required.
2. Cooling tower water is at proper level and at-or-below design entering temperature.
3. Chiller is charged with refrigerant and all refrigerant valves are in their proper operating positions.
4. Valves in the evaporator and condenser water circuits are open and flow is as per design.

NOTE: If the pumps are not automatic, ensure water is circulating properly.

NOTE: UPS battery supplier recommends to charge the battery for 12 hours prior to use. Battery pack will charge when power is applied to the VFD. If this cannot be accommodated and it has been 6 months or more since the chiller manufacture date, then replacement batteries should be available at startup. To replace batteries, remove power to unit, allow capacitors to discharge, open high voltage power panel section, remove UPS cover, disconnect wires to cables, remove screws to battery section, pull out batteries and replace. See Fig. 42 for detailed battery replacement steps.

A battery discharge test should be performed after every battery replacement to establish new battery health. This can be done from the 19MV quick test menu. Every battery replacement should also be logged in the UPS configuration menu.

⚠ CAUTION

Do not permit water or brine that is warmer than 110°F (43°C) to flow through the evaporator or condenser. Refrigerant overpressure may discharge through the relief device and result in the loss of refrigerant charge.

REPLACING THE BATTERY

Replacement of batteries located in an OPERATOR ACCESS AREA.
When replacing batteries, replace with the same number and type of batteries. .

CAUTION! Risk of Energy Hazard, 24V, maximum 18 Ampere-hour battery. Before replacing batteries, remove conductive jewelry such as chains, wristwatches, and rings. High energy conducted through these materials could cause severe burns.

CAUTION! Do not dispose of batteries in a fire. The batteries may explode.

CAUTION! Do not open or mutilate batteries. Released material is harmful to the skin and eyes. It may be toxic.

CAUTION! RISK OF EXPLOSION IF BATTERY IS REPLACED BY AN INCORRECT TYPE. DISPOSE OF USED BATTERIES ACCORDING TO LOCAL REGULATIONS .

BATTERY REPLACEMENT PROCEDURE:

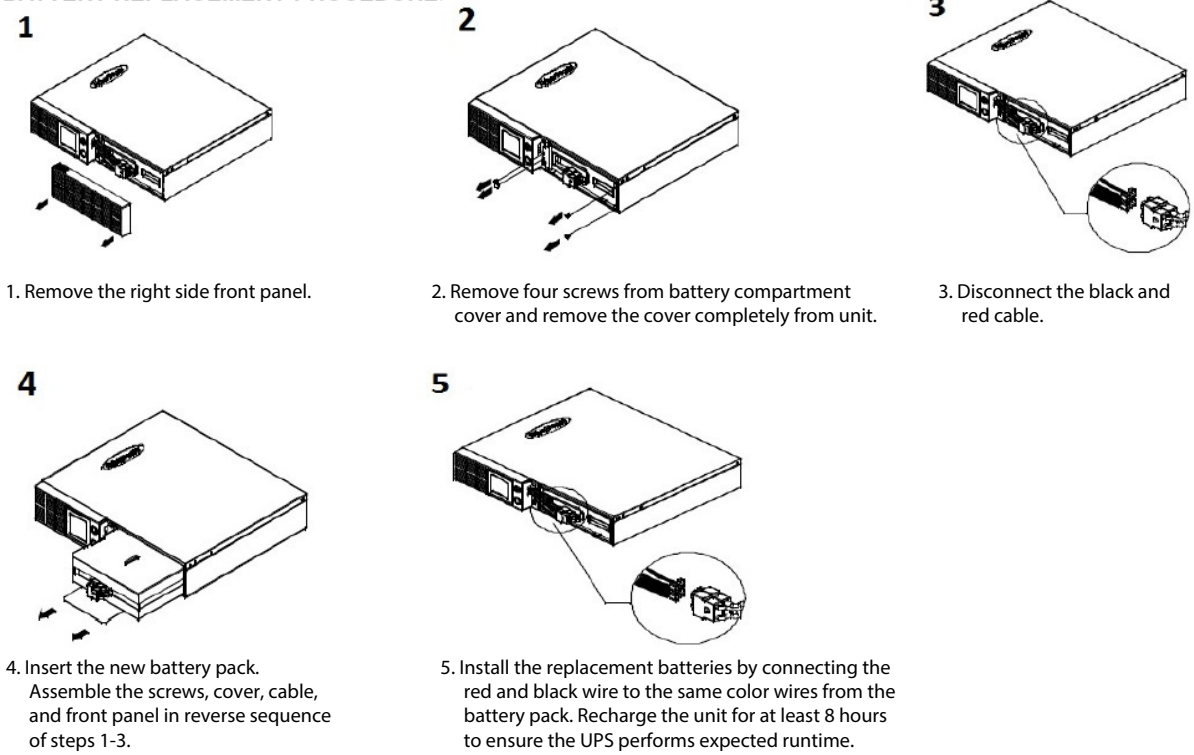

1. Remove the right side front panel.
2. Remove four screws from battery compartment cover and remove the cover completely from unit.
3. Disconnect the black and red cable.
4. Insert the new battery pack. Assemble the screws, cover, cable, and front panel in reverse sequence of steps 1-3.
5. Install the replacement batteries by connecting the red and black wire to the same color wires from the battery pack. Recharge the unit for at least 8 hours to ensure the UPS performs expected runtime.

REMINDER: Batteries are considered HAZARDOUS WASTE and must be disposed of properly. Most retailers that sell lead-acid batteries collect used batteries for recycling, as required by local regulations.

Fig. 42 — Replacing the Battery

Check Motor Rotation

1. Close the starter enclosure door.
2. Apply 3-phase power to drive.
3. The VFD checks for proper phase rotation as soon as power is applied to the starter and the PIC6 controls power up.
4. An alarm message will appear on the HMI screen if the phase rotation is incorrect. If this occurs reverse any 2 of the 3 incoming power leads to the starter and reapply power. The motor is now ready for a rotation check. It will be necessary to set the IGV2 opening start position to approximately 10% or greater to see the impeller and determine rotation. Main menu/Configuration Menu/Service Parameter/IGV2 Minimum degree with a range of 0-20. After confirmation set the value back to the default.
5. When the VFD is energized and the motor begins to turn, check for counterclockwise motor rotation through second stage sight glasses. See Fig. 43.

IMPORTANT: Do not check motor rotation during coastdown. Rotation may have reversed during equalization of vessel pressures.

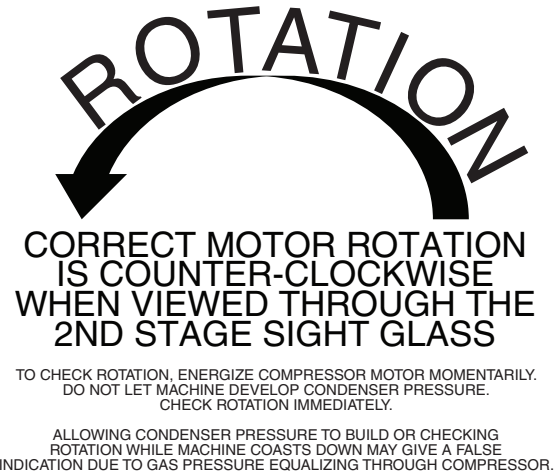

Fig. 43 — Correct Motor Rotation

To Prevent Accidental Start-Up

A chiller STOP override setting may be entered to prevent accidental start-up during service or whenever necessary. From the Main Menu, access the General Parameters Menu and use the down arrow to reach Stop Override on the GENUNIT table. Change Stop Override to Yes; then execute the command by touching the lightning button. The message "ALM-276 Protective Limit - Stop Override" will appear in the Home Screen message area. To restart the chiller, access the same screen and change the Stop Override option to No.

Check Chiller Operating Condition

Check to be sure that chiller temperatures, pressures, water flows, and refrigerant levels indicate the system is functioning properly.

Instruct the Customer Operator(s)

Ensure the operator understands all operating and maintenance procedures. Point out the various chiller parts and explain their function as part of the complete system.

EVAPORATOR-CONDENSER

Relief devices, refrigerant charging valve, temperature sensor locations, pressure transducer locations, condenser liquid level sensor, main EXV, Schrader fittings, waterboxes and tubes, and vents and drains.

MOTOR COMPRESSOR ASSEMBLY

Guide vane actuator, transmission, motor cooling system, temperature and pressure sensors, sight glasses, motor temperature sensors, MBC, and compressor serviceability.

ECONOMIZER

BPHX and economizer EXV. Pressure transducer and temperature sensor location.

CONTROL SYSTEM

NETWORK and LOCAL start, reset, menu, softkey functions, HMI operation, occupancy schedule, set points, safety controls, and auxiliary and optional controls.

AUXILIARY EQUIPMENT

Starters and disconnects, separate electrical sources, pumps, and cooling tower.

DESCRIBE CHILLER CYCLES

Refrigerant, motor cooling, and liquid reclaim.

REVIEW MAINTENANCE

Scheduled, routine, and extended shutdowns, importance of a log sheet, importance of water treatment and tube cleaning, and importance of maintaining a leak-free chiller.

SAFETY DEVICES AND PROCEDURES

Electrical disconnects, relief device inspection, and handling refrigerant.

CHECK OPERATOR KNOWLEDGE

Start, stop, and shutdown procedures, safety and operating controls, refrigerant charging, and job safety.

REVIEW MANUALS

Refer to the Start-Up, Operation, and Maintenance Manual and the Controls, Operation and Troubleshooting Manual.

OPERATING INSTRUCTIONS

Operator Duties

1. Become familiar with the chiller and related equipment before operating the chiller.
2. Prepare the system for start-up, start and stop the chiller, and place the system in a shutdown condition.
3. Maintain a log of operating conditions and document any abnormal readings.
4. Inspect the equipment, make routine adjustments, and perform a Control Test. Maintain the proper refrigerant levels.
5. Protect the system from damage during shutdown periods.
6. Maintain set point, time schedules, and other PIC functions.

Prepare the Chiller for Start-Up

Follow the steps described in the Initial Start-Up section, page 36.

To Start the Chiller

1. Start the water pumps, if they are not automatic.
2. Press the Start/Stop icon on the HMI home screen to start the system. If the chiller is in the OCCUPIED mode and the start timers have expired, the start sequence will start. Follow the procedure described in the Start-Up/Shutdown/Recycle Sequence section, page 20.

Check the Running System

After the compressor starts, the operator should monitor the display and observe the parameters for normal operating conditions:

1. The moisture indicator sight glass on the refrigerant motor cooling line should indicate single phase refrigerant flow and a dry condition.
2. The condenser pressure and temperature varies with the chiller design conditions. Typically the pressure will range

from 60 to 135 psig (390 to 950 kPa). with a corresponding temperature range of 60 to 105°F (15 to 41°C). The condenser entering water temperature should be controlled below the specified design entering water temperature to save on compressor kilowatt requirements.

3. Evaporator pressure and temperature also will vary with the design conditions. Typical pressure range will be between 29.5 and 40.1 psig (203.4 and 276.4 kPa), with temperature ranging between 34 and 45°F (1.1 and 7.2°C).
4. The active electrical demand setting can be overridden to limit the compressor kW, or the pulldown rate can be decreased to avoid a high demand charge. It may be necessary to demand limit chiller. Base Demand Limit % is set at the Setpoint Menu in the Main Menu. Demand limit is based on chiller amps and kW is based on configured Demand Limit Source in ***Main Menu→ Configuration Menu→ General***. Pulldown rate can be based on load rate or temperature rate and is viewed at ***Main Menu→ Configuration Menu→ General***. Configuration of the actual ramping rate is done in the Service Parameters Menu (***Main Menu→ Configuration Menu→ Service Parameters***) where either Amps/kW Ramp per minute or Temperature Ramp per minute can be adjusted to slow down the chiller response.

To Stop the Chiller

The occupancy schedule starts and stops the chiller automatically once the time schedule is configured.

The unit can be stopped manually using the HMI by pressing the green Start/Stop icon ⏻. The Unit Start/Stop screen is displayed. Press Confirm Stop. The compressor will then follow the normal shutdown sequence as described in the Start-Up/Shutdown/Recycle Sequence section on page 20. The chiller is now in the OFF control mode.

IMPORTANT: Do not attempt to stop the chiller by opening an isolating knife switch. High intensity arcing may occur.

If the chiller is stopped by an alarm condition, *do not restart the chiller* until the problem is diagnosed and corrected.

After Limited Shutdown

No special preparations should be necessary. Follow the regular preliminary checks and starting procedures.

Preparation for Extended Shutdown

The refrigerant should be transferred into the pumpout storage tank (if supplied; see "PUMPOUT AND REFRIGERANT TRANSFER PROCEDURES" on page 40) to reduce chiller pressure and the possibility of leaks. Maintain a holding charge of 5 to 10 lb (2.27 to 4.5 kg) of refrigerant or nitrogen to prevent air from leaking into the chiller.

For season chiller shutdown and lay-up, if the treated water is not drained then provisions should be made to start the pumps weekly to circulate the water and avoid corrosion. Consult the water treatment company for details. Carrier is not responsible for waterside corrosion.

If freezing temperatures are likely to occur in the chiller area, drain the chilled water, the condenser water, and the pumpout condenser water circuits to avoid freeze-up. Keep the waterbox drains open.

It is recommended not to store the refrigerant in the unit if below freezing temperatures are anticipated. A nitrogen holding charge is recommended in this case.

After Extended Shutdown

Ensure water system drains are closed. It may be advisable to flush water circuits to remove any soft rust that may have formed. This is a good time to brush the tubes and inspect the Schrader fittings on the waterside flow devices for fouling, if necessary. Brushing the tubes will also confirm the absence of any debris or particulate lodged in the tubes that could result in tube failure. If water remains in the unit, confirm it is treated and periodically circulate water through the heat exchangers to prevent corrosion of the tube inner surface.

Match the actual to the recorded nitrogen pressure prior to the extended shutdown to determine if a leak is present. Check the evaporator pressure on the HMI panel and compare it to the original holding charge that was left in the chiller. If, after adjusting for ambient pressure changes, any change in pressure is indicated, check for refrigerant leaks. See Check Chiller Tightness section, page 24.

If charge was removed, recharge the chiller by transferring refrigerant from the pumpout storage tank (if supplied). Follow the Pumpout and Refrigerant Transfer Procedures section on page 40. Observe freeze-up precautions.

Carefully make all regular preliminary and running system checks.

Cold Weather Operation

When the entering condenser water temperature drops very low, the operator should automatically cycle the cooling tower fans off to keep the temperature up and tower bypass piping or condenser water flow modulation may be required.

Manual Guide Vane Operation

It is possible to manually operate the guide vanes in order to check control operation or to control the guide vanes in an emergency. Manual operation is possible by overriding the target guide vane position. Forcing the guide vanes is only possible in the Lab Test Forced factory menu.

NOTE: Manual control overrides the configured pulldown rate during start-up and permits the guide vanes to open at a faster rate. Motor current above the electrical demand setting, capacity overrides, and chilled water temperature below the control point override the manual target and close the guide vanes. For descriptions of capacity overrides and set points, see the 19MV Controls Operation and Troubleshooting guide.

Refrigeration and Service Log

A refrigeration log (as shown in Fig. 44), is a convenient checklist for routine inspection and maintenance and provides a continuous record of chiller performance. It is also an aid when scheduling routine maintenance and diagnosing chiller problems.

Keep a record of the chiller pressures, temperatures, and liquid levels on a sheet similar to the one in Fig. 44. Automatic recording of data is possible by exporting the data from the PIC6 controller. Contact a Carrier representative for more information.

Refrigeration Log Carrier 19MV/MVR Semi-Hermetic Centrifugal Refrigeration Machine

PLANT_____ **MACHINE MODEL NO.**_____ **MACHINE SERIAL NO.** _____

DESCRIPTION			DATE				
EVAPORATOR	Refrigerant	PRESSURE SAT					
		LIQUID TEMP					
	Water	FLOW					
		TEMP IN					
		TEMP OUT					
CONDENSER	Refrigerant	PRESSURE					
		TEMP SAT					
		LEVEL					
	Water	FLOW					
		TEMP IN					
		TEMP OUT					
COMPRESSOR	Capacity	GV1 ACTUAL POS					
		GV2 ACTUAL POS					
	Oil	OIL PRESSURE DIFFERENTIAL					
		OIL TEMPERATURE					
		COMPRESSOR STARTS					
		COMPRESSOR OPERATING HOURS TO THE LOG					
DRIVE TRAIN	Motor	RUNNING AMPS					
		TEMPERATURE					
	VFD	ACTUAL SPEED					
MCB	Clearance Check Values	Take picture of the “MCB Clearance Check” screen for future reference.					

REMARKS: Indicate shutdowns on safety controls, repairs made, and inhibitor or refrigerant added or removed. Include amounts.

Fig. 44 — Refrigeration and Service Log

PUMPOUT AND REFRIGERANT TRANSFER PROCEDURES

Preparation

The 19MV chiller system may include an optional external pumpout storage tank, pumpout system, or pumpout compressor. The refrigerant can be pumped for service work to either the chiller compressor vessel or chiller condenser vessel by using the optional pumpout system (19MV oil lubricated only with optional refrigerant isolation valves). If a pumpout storage tank is supplied, the refrigerant can be isolated in the storage tank. The following procedures describe how to transfer refrigerant from vessel to vessel and perform chiller evacuation.

⚠ CAUTION

The power to the pumpout compressor oil heater must be on whenever any valve connecting the pumpout compressor to the chiller or storage tank is open. Leaving the heater off will result in oil dilution by refrigerant and can lead to compressor failure.

If the compressor is found with the heater off and a valve open, the heater must be on for at least 4 hours to drive the refrigerant from the oil. When heating the oil the compressor suction must be open to a vessel to give the refrigerant a means to leave the compressor.

⚠ CAUTION

Always run the chiller cooler and condenser water pumps and always charge or transfer refrigerant as a gas when the chiller pressure is less than a 40°F saturated refrigerant temperature. Below this temperature, liquid refrigerant flashes into gas, resulting in extremely low temperatures in the cooler/condenser tubes and possibly causing tube freeze-up.

⚠ DANGER

During transfer of refrigerant into and out of the optional storage tank, carefully monitor the storage tank level gauge. Do not fill the tank more than 90% of capacity to allow for refrigerant expansion. Overfilling may result in damage to the tank or the release of refrigerant which will result in personal injury or death.

⚠ CAUTION

Do not mix refrigerants from chillers that use different compressor oils. Compressor damage can result.

Operating the Optional Pumpout Unit

Oil should be visible in the pumpout unit compressor sight glass under all operating conditions and during shutdown. If oil is low, add oil.

TO READ REFRIGERANT PRESSURES (during pumpout or leak testing):

1. The display on the chiller control panel is suitable for determining refrigerant-side pressures and low (soft) vacuum. To assure the desired range and accuracy when measuring evacuation and dehydration, use a quality vacuum indicator or manometer. This can be placed on the Schrader connections on each vessel by removing the pressure transducer.
2. To determine pumpout storage tank pressure, a 30 in. Hg vacuum –0-400 psi (101-0-2758 kPa) gauge is attached to the storage tank.

⚠ CAUTION

Transfer, addition, or removal of refrigerant in spring-isolated chillers may place severe stress on and damage external piping if springs have not been blocked in both up and down directions.

POSITIVE PRESSURE CHILLERS WITH STORAGE TANKS

In the Valve/Condition tables that accompany these instructions, the letter "C" indicates a closed valve.

⚠ CAUTION

Always run chiller cooler and condenser water pumps and always charge or transfer refrigerant as a gas when chiller vessel pressure is less than 35 psig (241 kPa). Below these pressures, liquid refrigerant flashes into gas, resulting in extremely low temperatures in the cooler/condenser tubes and possibly causing tube freeze-up.

Transfer Refrigerant from Pumpout Storage Tank to Chiller

⚠ WARNING

During transfer of refrigerant into and out of the 19XR storage tank, carefully monitor the storage tank level gauge. Do not fill the tank more than 90% of capacity to allow for refrigerant expansion. Overfilling may result in damage to the tank and personal injury.

1. Equalize refrigerant pressure.
   a. Turn on chiller water pumps and monitor chiller pressures.
   b. Close pumpout and storage tank valves 2, 4, 5, and 10, and close refrigerant charging valve 7; open chiller isolation valve 11 and any other chiller isolation valves, if present.
   c. Open pumpout and storage tank valves 3 and 6; open chiller valves 1a and 1b.

VALVE	1a	1b	2	3	4	5	6	7	10	11
CONDITION			C		C	C		C	C	

   d. Gradually crack open valve 5 to increase chiller pressure to 35 psig (241 kPa). Slowly feed refrigerant to prevent freeze-up.
   e. Open valve 5 fully after the chiller pressure rises above the freezing point of the refrigerant. Let the storage tank and chiller pressure equalize. Open refrigerant charging valve 7 and storage tank charging valve 10 to let liquid refrigerant drain into the chiller.

VALVE	1a	1b	2	3	4	5	6	7	10	11
CONDITION			C		C					

2. Transfer remaining refrigerant.
   a. Close valve 5 and open valve 4. Turn off pumpout condenser water, and turn on pumpout compressor in manual mode to push liquid refrigerant out of storage tank. Monitor the storage tank level until tank is empty.
   b. Close refrigerant charging valves 7 and 10.
   c. Turn off the pumpout compressor.
   d. Turn off the chiller water pumps.
   e. Close valves 3 and 4.
   f. Open valves 2 and 5.

VALVE	1a	1b	2	3	4	5	6	7	10	11
CONDITION				C	C			C	C	

   g. Turn on pumpout condenser water.
   h. Run the pumpout compressor in manual mode until the storage tank pressure reaches 5 psig (34 kPa), 18 in. Hg vacuum (41 kPa absolute).
   i. Turn off the pumpout compressor.
   j. Close valves 1a, 1b, 2, 5, and 6.

VALVE	1a	1b	2	3	4	5	6	7	10	11
CONDITION	C	C	C	C	C	C	C	C	C	

   k. Turn off pumpout condenser water.

Transfer the Refrigerant from Chiller to Pumpout Storage Tank

1. Equalize refrigerant pressure.
   a. Valve positions:

VALVE	1a	1b	2	3	4	5	6	7	10	11
CONDITION			C		C	C		C	C	

   b. Slowly open valve 5 and refrigerant charging valves 7 and 10 to allow liquid refrigerant to drain by gravity into the storage tank.

VALVE	1a	1b	2	3	4	5	6	7	10	11
CONDITION			C		C					

2. Transfer the remaining liquid.
   a. Turn off pumpout condenser water. Place valves in the following positions:

VALVE	1a	1b	2	3	4	5	6	7	10	11
CONDITION				C	C					

   b. Run the pumpout compressor in automatic mode until vacuum switch is satisfied and compressor stops. Close valves 7 and 10.

VALVE	1a	1b	2	3	4	5	6	7	10	11
CONDITION				C	C			C	C	

   c. Turn off the pumpout compressor.
3. Remove any remaining refrigerant.
   a. Turn on chiller water pumps.
   b. Turn on pumpout condenser water.
   c. Place valves in the following positions:

VALVE	1a	1b	2	3	4	5	6	7	10	11
CONDITION			C			C		C	C	

   d. Run pumpout compressor until chiller pressure reaches 35 psig (241 kPa); then shut off the pumpout compressor. Warm chiller condenser water will boil off any entrapped liquid refrigerant and chiller pressure will rise.
   e. When chiller pressure rises to 40 psig (276 kPa), turn on pumpout compressor until pressure again reaches 35 psig (241 kPa); then turn off pumpout compressor. Repeat this process until chiller pressure no longer rises; then turn on the pumpout compressor and pump out until the chiller pressure reaches 18 in. Hg vacuum (41 kPa absolute). This can be done in On or Automatic mode.

f. Close valves 1a, 1b, 3, 4, and 6.

VALVE	1a	1b	2	3	4	5	6	7	10	11
CONDITION	C	C	C	C	C	C	C	C	C	

g. Turn off the pumpout condenser water.

4. Establish vacuum for service. To conserve refrigerant, operate the pumpout compressor as described in Step 3e until the chiller pressure is reduced to 18 in. Hg vacuum (41 kPa absolute).
This operation can be done in Automatic or On mode. In Automatic mode, the compressor will stop automatically at approximately 15 in. Hg vacuum (51 kPa absolute).

CHILLERS WITH ISOLATION VALVES

Transfer All Refrigerant to Chiller Condenser Vessel

1. Push refrigerant into chiller condenser vessel.
   a. Turn on the chiller water pumps and monitor the chiller pressure.
   b. Valve positions:

VALVE	1a	1b	2	3	4	5	11
CONDITION				C	C		

   c. Equalize refrigerant in the chiller cooler and condenser.
   d. Turn off chiller water pumps and pumpout condenser water supply.
   e. Turn on pumpout compressor to push liquid out of the chiller cooler vessel.
   f. When all liquid has been pushed into chiller condenser vessel, close cooler refrigerant isolation valve (11).
   g. Turn on the chiller water pumps.
   h. Turn off the pumpout compressor.
2. Evacuate gas from chiller cooler vessel.
   a. Close liquid line service valves 2 and 5; open valves 3 and 4.

VALVE	1a	1b	2	3	4	5	11
CONDITION			C			C	C

   b. Turn on pumpout condenser water.
   c. Run pumpout compressor until the chiller cooler vessel pressure reaches 18 in. Hg vacuum (41 kPa absolute). Monitor pressures on the chiller control panel and on refrigerant gauges. This operation can be done in Automatic or On mode. In Automatic mode, compressor will stop automatically at approximately 15 in. Hg vacuum (51 kPa absolute).
   d. Close valve 1a.
   e. Turn off pumpout compressor.
   f. Close valves 1b, 3, and 4.

VALVE	1a	1b	2	3	4	5	11
CONDITION	C	C	C	C	C	C	C

   g. Turn off pumpout condenser water.
   h. Turn off chiller water pumps and lock out chiller compressor.

Transfer All Refrigerant to Chiller Cooler Vessel

1. Push refrigerant into the chiller cooler vessel.
   a. Turn on the chiller water pumps and monitor the chiller pressure.
   b. Valve positions:

VALVE	1a	1b	2	3	4	5	11
CONDITION				C	C		

   c. Equalize refrigerant in the chiller cooler and condenser.
   d. Turn off chiller water pumps and pumpout condenser water.
   e. Turn on pumpout compressor to push refrigerant out of the chiller condenser.
   f. When all liquid is out of the chiller condenser, close valve 11 and any other liquid isolation valves on the chiller.
   g. Turn off the pumpout compressor.
2. Evacuate gas from chiller condenser vessel.
   a. Turn on chiller water pumps.
   b. Make sure that liquid line service valves 3 and 4 are closed and valves 2 and 5 are open.

VALVE	1a	1b	2	3	4	5	11
CONDITION				C	C		C

   c. Turn on pumpout condenser water.
   d. Run the pumpout compressor until the chiller condenser reaches 18 in. Hg vacuum (41 kPa absolute) in Manual or Automatic mode. Monitor pressure at the chiller control panel and refrigerant gauges.
   e. Close valve 1b.
   f. Turn off pumpout compressor.
   g. Close valves 1a, 2, and 5.

VALVE	1a	1b	2	3	4	5	11
CONDITION	C	C	C	C	C	C	C

   h. Turn off pumpout condenser water.
   i. Turn off chiller water pumps and lock out chiller compressor.

Return Refrigerant to Normal Operating Conditions

1. Be sure that the chiller vessel that was opened has been evacuated.
2. Turn on chiller water pumps.
3. Open valves 1a, 1b, and 3.

VALVE	1a	1b	2	3	4	5	11
CONDITION			C		C	C	C

4. Crack open valve 5, gradually increasing pressure in the evacuated chiller vessel to 35 psig (241 kPa). Feed refrigerant slowly to prevent tube freeze-up.
5. Leak test to ensure chiller vessel integrity.
6. Open valve 5 fully.

VALVE	1a	1b	2	3	4	5	11
CONDITION			C		C		C

7. Close valves 1a, 1b, 3, and 5.
8. Open chiller isolation valve 11 and any other isolation valves, if present.

VALVE	1a	1b	2	3	4	5	11
CONDITION	C	C	C	C	C	C	

9. Turn off chiller water pumps.

DISTILLING THE REFRIGERANT

1. Transfer the refrigerant from the chiller to the pumpout storage tank as described in the Transfer the Refrigerant from Chiller to Pumpout Storage Tank section on page 41.
2. Equalize the refrigerant pressure.
   a. Turn on chiller water pumps and monitor chiller pressures.
   b. Close pumpout and storage tank valves 2, 4, 5, and 10, and close chiller charging valve 7; open chiller isolation valve 11 and any other chiller isolation valves, if present.

c. Open pumpout and storage tank valves 3 and 6; open chiller valves 1a and 1b.

VALVE	1a	1b	2	3	4	5	6	7	10	11
CONDITION			C		C	C		C	C	

d. Gradually crack open valve 5 to increase chiller pressure to 35 psig (241 kPa). Slowly feed refrigerant to prevent freeze-up.

e. Open valve 5 fully after the chiller pressure rises above the freezing point of the refrigerant. Let the storage tank and chiller pressure equalize.

3. Transfer remaining refrigerant.

a. Close valve 3.

b. Open valve 2.

VALVE	1a	1b	2	3	4	5	6	7	10	11
CONDITION				C	C			C	C	

c. Turn on pumpout condenser water.

d. Run the pumpout compressor until the storage tank pressure reaches 5 psig (34 kPa), 18 in. Hg vacuum (41 kPa absolute) in Manual or Automatic mode.

e. Turn off the pumpout compressor.

f. Close valves 1a, 1b, 2, 5, and 6.

g. Turn off pumpout condenser water.

VALVE	1a	1b	2	3	4	5	6	7	10	11
CONDITION	C	C	C	C	C	C	C	C	C	

4. Drain the contaminants from the bottom of the storage tank into a container. Dispose of contaminants safely.

GENERAL MAINTENANCE

Refrigerant Properties

Standard refrigerants for the 19MV chiller are R-513A, R-515B, and R-1234ze(E). At normal atmospheric pressure, R-513A, R-515B, or R-1234ze(E) will boil at –28°F (–33°C)/–2.02°F (–18.9°C) and must, therefore, be kept in pressurized containers or storage tanks. The refrigerant is practically odorless when mixed with air and is noncombustible at atmospheric pressure. Read the Material Safety Data Sheet and the latest ASHRAE Safety Guide for Mechanical Refrigeration to learn more about safe handling of this refrigerant.

⚠ DANGER

R-513A, R-515B, and R-1234ze(E) will dissolve oil and some non-metallic materials, dry the skin, and, in heavy concentrations, may displace enough oxygen to cause asphyxiation. When handling this refrigerant, protect the hands and eyes and avoid breathing fumes.

Adding Refrigerant

Follow the procedures described in the Trim Refrigerant Charge section, page 45.

⚠ CAUTION

Always ensure to have water flow and lock out the compressor when transferring refrigerant. Liquid refrigerant may flash into a gas and cause possible freeze-up and damage to the unit when the chiller pressure is below 40 psig (277 kPa) for R-513A, 22 psig (153 kPa) for R-515B, or 22 psig (153 kPa) for R-1234ze(E).

Adjusting the Refrigerant Charge

If the addition or removal of refrigerant is required to improve chiller performance, follow the procedures given under the Trim Refrigerant Charge section, page 45.

Refrigerant Leak Testing

Because the refrigerant pressure is above atmospheric pressure at room temperature, leak testing can be performed with refrigerant in the chiller. Use an electronic halogen leak detector, soap bubble solution, or ultrasonic leak detector. Ensure that the room is well ventilated and free from concentration of refrigerant to keep false readings to a minimum. Before making any necessary repairs to a leak, transfer all refrigerant from the leaking vessel.

Leak Rate

ASHRAE recommends that chillers be taken off line immediately and repaired if the refrigerant leak rate for the entire chiller is more than 10% of the operating refrigerant charge per year.

Carrier recommends that leaks totaling less than the above rate but more than a rate of 0.1% of the total charge per year should be repaired during annual maintenance or whenever the refrigerant is transferred for other service work.

Test After Service, Repair, or Major Leak

If all the refrigerant has been lost or if the chiller has been opened for service, the chiller or the affected vessels must be pressure tested and leak tested. Refer to the Leak Test Chiller section on page 26 to perform a leak test.

⚠ WARNING

R-513A, R-515B and R-1234ze(E) should not be mixed with air or oxygen and pressurized for leak testing. In general, this refrigerant should not be present with high concentrations of air or oxygen above atmospheric pressures, because the mixture can undergo combustion.

TESTING WITH REFRIGERANT TRACER

Use an environmentally acceptable refrigerant as a tracer for leak test procedures. Use dry nitrogen to raise the machine pressure to leak testing levels.

TESTING WITHOUT REFRIGERANT TRACER

Another method of leak testing is to pressurize with nitrogen only and to use a soap bubble solution or an ultrasonic leak detector to determine if leaks are present.

TO PRESSURIZE WITH DRY NITROGEN

NOTE: Pressurizing with dry nitrogen for leak testing should not be done if the full refrigerant charge is in the vessel because purging the nitrogen is very difficult.

1. Connect a copper tube from the pressure regulator on the cylinder to the refrigerant charging valve. Never apply full cylinder pressure to the pressurizing line. Follow the listed sequence.
2. Open the charging valve fully.
3. Slowly open the cylinder regulating valve.
4. Observe the pressure gauge on the chiller and close the regulating valve when the pressure reaches test level. *Do not exceed* 140 psig (965 kPa).
5. Close the charging valve on the chiller. Remove the copper tube if it is no longer required.

Repair Leaks, Retest, Standing Vacuum Test

After pressurizing the chiller, test for leaks with a leak detector, electronic halide leak detector, soap bubble solution, or ultrasonic leak detector. Bring the chiller back to atmospheric pressure, repair any leaks found, and retest.

After retesting and finding no leaks, apply a standing vacuum test. Then dehydrate the chiller. Refer to the Standing Vacuum Test and Chiller Dehydration sections (pages 28 and 29) in the Before Initial Start-Up section.

Checking Guide Vanes

During normal shutdown, when the chiller is off, the guide vanes are closed. Complete the following steps to adjust position if required (see Fig. 45 and 46):

1. Remove the set screw in the guide vane coupling.
2. Loosen the holddown bolts on the guide vane actuator.
3. Pull the guide vane actuator away from the suction housing.
4. If required, rotate the guide vane shaft fully clockwise for first stage and counterclockwise for second stage and spot-drill the guide vane actuator shaft. Spot-drilling is necessary when the guide vane actuator sprocket set screws on the guide vane actuator shaft need to be re-seated. (Remember: Spot-drill and tighten the first set screw before spot-drilling for the second set screw.)

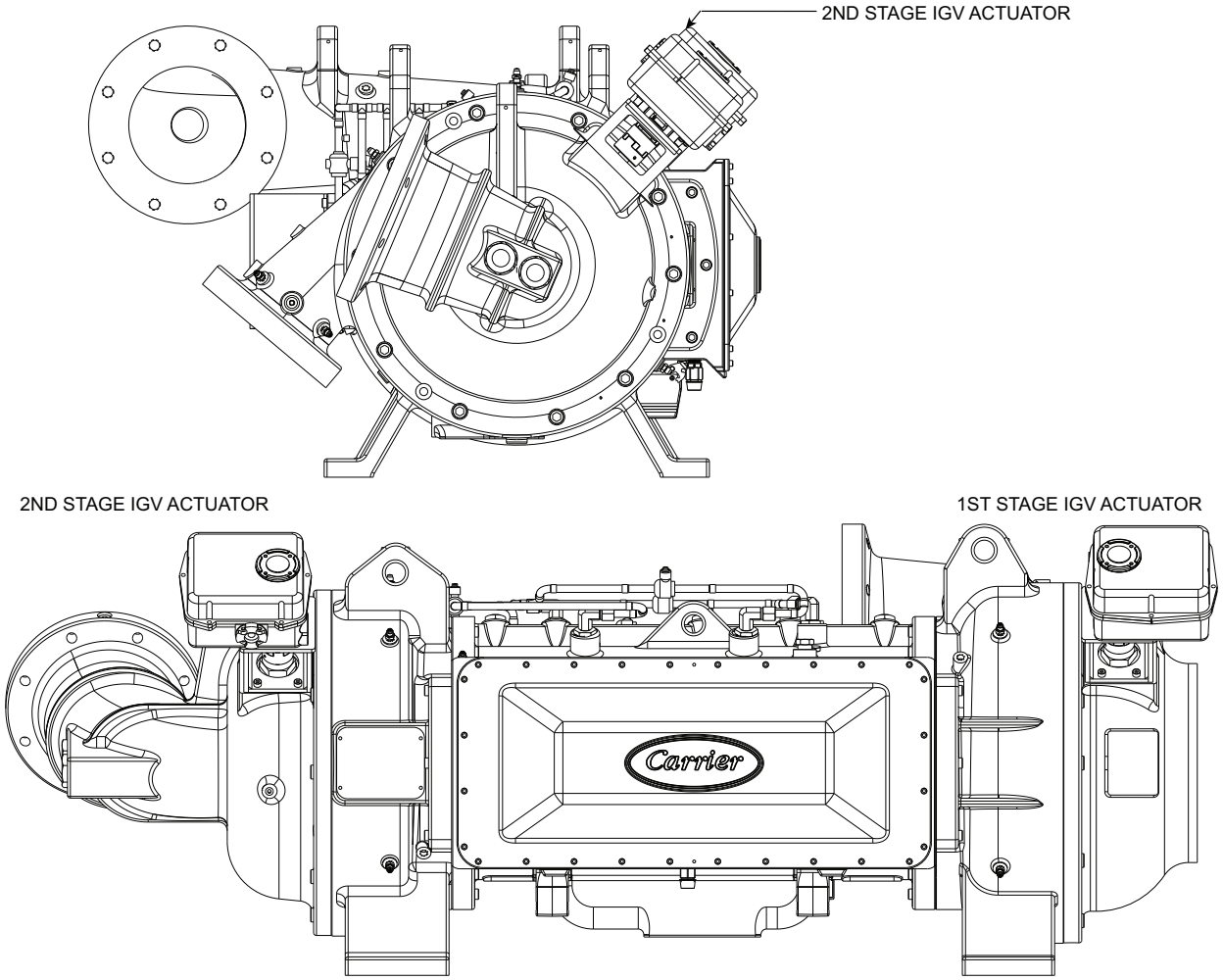

Fig. 45 — Integrated Guide Vane Actuator

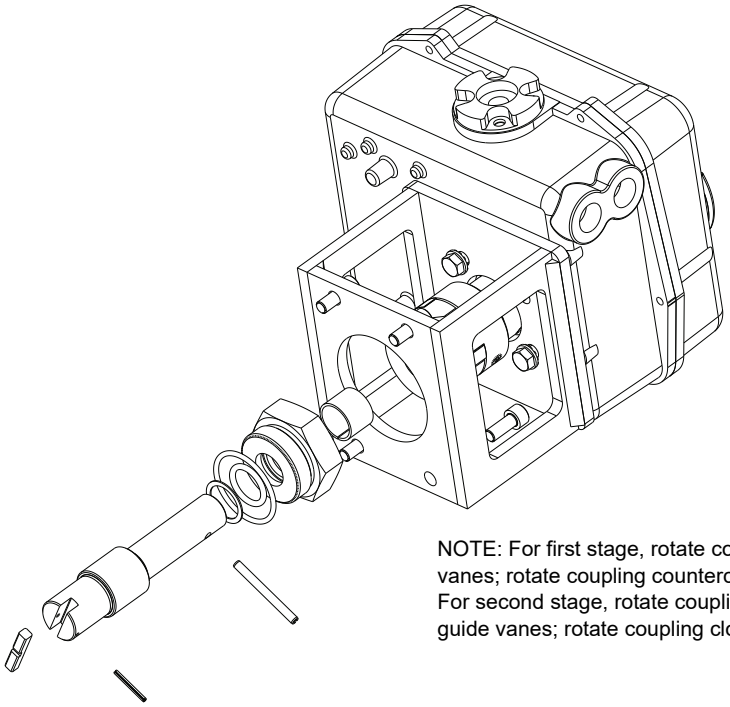

NOTE: For first stage, rotate coupling clockwise to close guide vanes; rotate coupling counterclockwise to open guide vanes. For second stage, rotate coupling counterclockwise to close guide vanes; rotate coupling clockwise to open guide vanes.

Fig. 46 — Guide Vane Actuator Detail

Trim Refrigerant Charge

If to obtain optimal chiller performance it becomes necessary to adjust the refrigerant charge, operate the chiller at design load and then add or remove refrigerant slowly until the difference between the leaving chilled water temperature and the evaporator refrigerant temperature reaches design conditions or becomes a minimum. *Do not overcharge.* Use evaporator sight glasses to visually determine optimum charge. Look at evaporator approach and discharge superheat compared with design. With LTD being at design condition, stop adding charge when discharge superheat starts to drop. Use the sight glasses located on the condenser and the sight glass on the oil reclaim circuit from cooler to suction housing for evaporator refrigerant level.

To remove any excess refrigerant, follow the procedure in "Transfer the Refrigerant from Chiller to Pumpout Storage Tank" on page 41.

SCHEDULED MAINTENANCE

Establish a regular maintenance schedule based on your actual chiller requirements such as chiller load, run hours, and water quality. *The time intervals listed in this section are offered as guides to service only.*

Run Times

The HMI will display Compressor Starts Number, Compressor Running Hours, and After Service Hours on the ***Main Menu → Run Times*** screen. The After Service Hours should be reset to zero by the service person or the operator each time major service work is completed so that the time between service events can be viewed and tracked. Previous values and associated dates should be logged for future reference prior to resetting.

Inspect the Power Panel

Maintenance consists of general cleaning and tightening of connections. Vacuum the control cabinets to eliminate dust build-up. If the chiller control malfunctions, refer to the Troubleshooting Guide section on page 49 for control checks and adjustments.

⚠ WARNING

Ensure power to the starter is isolated when cleaning and tightening connections inside the starter enclosure. Failure to disconnect power could result in electrocution.

Changing Refrigerant Filters

Clean the refrigerant main EXV strainer cartridge after the first year of operation and every five years afterwards and replace the motor cooling filter drier on an annual basis or when the chiller is opened for repairs. The filters can be isolated so they can be changed with refrigerant remaining in the chiller. Change strainers/filters by closing isolation valves and recover the trapped refrigerant. The EXV filter cartridge can be replaced by opening the bolted end of the strainer housing. Similarly the motor cooling in-line filter can be replaced by slowly opening the flare fitting with a wrench and back-up wrench to relieve pressure and then replacing with new in-line filter. Follow good service practice and evacuate the disturbed areas after filter/strainer replacement.

Inspect Safety Relief Devices and Piping

The relief device on this chiller protects the system against the potentially dangerous effects of overpressure. To ensure against damage to the equipment and possible injury to personnel, these devices must be kept in peak operating condition.

As a minimum, the following maintenance is required.

1. At least once a year, disconnect the vent piping at the valve outlet and carefully inspect the relief valves for any evidence of internal corrosion or rust, dirt, scale, leakage, etc. Verify that vent piping has a section leaning away from the relief valves to avoid the valve outlet becoming a trap for dirt, condensation etc.
2. If corrosion or foreign material is found, do not attempt to repair or recondition. *Replace the safety relief device.*
3. If the chiller is installed in a corrosive atmosphere or the relief devices are vented into a corrosive atmosphere, inspect the safety relief devices at more frequent intervals.

Compressor Bearing Maintenance

The biggest risk to the 19MV compressor is damage incurred from contact between the shaft and auxiliary roller bearings at high rotational speeds. The number of high-speed drops that occur is kept in the MBC menu (MBC Drop Counter), and should be checked regularly to detect when any new high-speed shaft contact has occurred. If the PIC detects an increase in fast contact revolutions, it will automatically conduct a clearance check on the next unit startup. A clearance check can also be manually initiated any time from the MBC home screen (so long as the unit is not running). A clearance check should be performed annually and recorded with a comparison of the increase in the counter from year to year.See Fig. 47. For more detailed information, it may be necessary to access the MBC board directly. See Fig. 48 for details regarding accessing the MBC cavity. A desiccant packet is mounted to the inside of the MBC cavity cover to protect the electronic control boards from potential humidity that may enter the cavity. If the cover is removed for maintenance the packet should be replaced.

⚠ CAUTION

Maintaining a dry environment inside of the MBC cavity is important to protect the MBC board electronics. Any time it is necessary for the MBC cavity to be opened, replace the desiccant pack.

If drop count is exceeded, the auxiliary bearings will need to be replaced immediately. When the drop counter is within 2000 revolutions of its limit contact Carrier service engineering to schedule maintenance to avoid unexpected down time. Ensure to revise the drop count limits to keep track of bearing wear. The drop counter monitors the number of full revolutions the motor shaft makes while it is in contact with the auxiliary bearings. It increments when the shaft is rotating at over 2675 rpm while de-levitated. New auxiliary bearings are rated for 7000 revolutions.

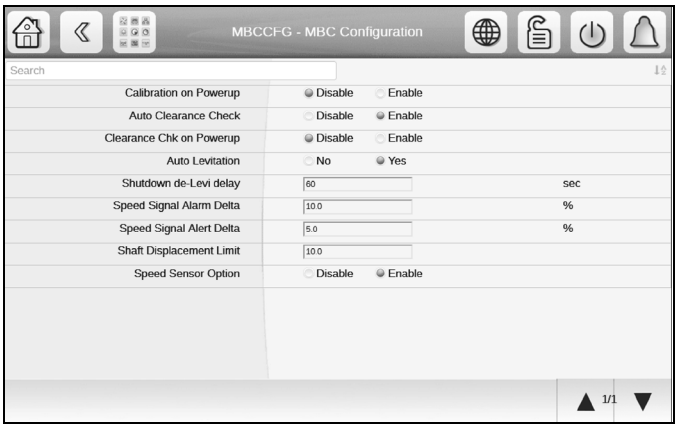

Fig. 47 — MBCCFG - MBC Configuration Screen

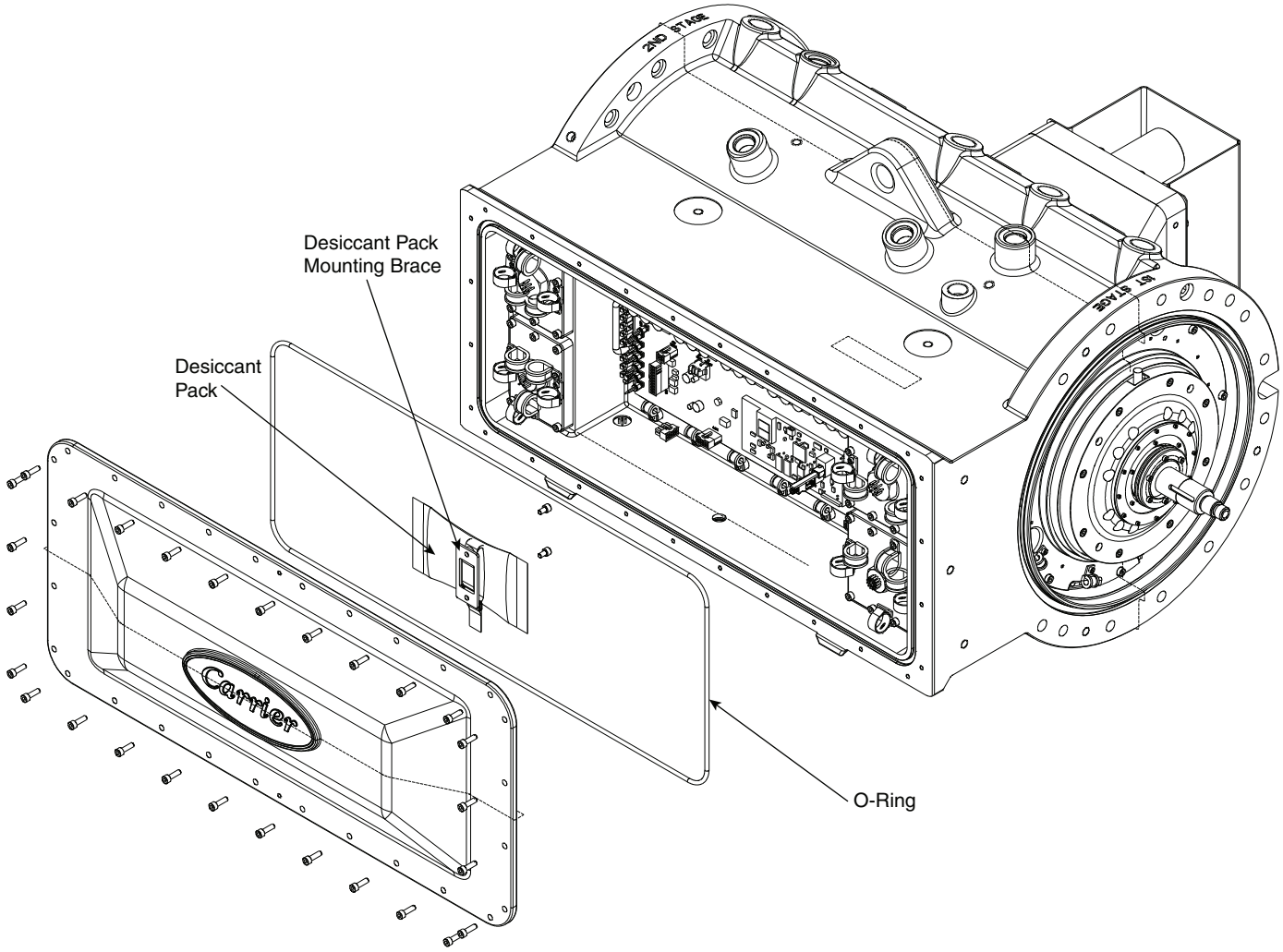

Fig. 48 — MBC Cavity Details

Compressor Bearing Maintenance (19MVR)

We recommend performing a vibration measurement and taking an oil sample for laboratory analysis once per year to identify bearing wear. The oil sample will also identify the condition of the refrigerant.

Inspect Heat Exchanger Tubes and Flow Devices

EVAPORATOR AND OPTIONAL FLOW DEVICES

Inspect and clean the evaporator tubes at the end of the first operating season. Because these tubes have internal ridges, a rotary-type tube cleaning system is needed to fully clean the tubes. Inspect the tubes' condition to determine the scheduled frequency for future cleaning and to determine whether water treatment in the chilled water/brine circuit is adequate. Inspect the entering and leaving chilled water temperature sensors and flow devices for signs of corrosion or scale. Replace a sensor or Schrader fitting if corroded or remove any scale if found.

CONDENSER AND OPTIONAL FLOW DEVICES

Since this water circuit is usually an open-type system, the tubes may be subject to contamination and scale. Clean the condenser tubes with a rotary tube cleaning system at least once per year and more often if the water is contaminated. Inspect the entering and leaving condenser water sensors and flow devices for signs of corrosion or scale. Replace the sensor or Schrader fitting if corroded or remove any scale if found.

Higher than normal condenser pressures, together with the inability to reach full refrigeration load, usually indicate dirty tubes or air in the chiller. If the refrigeration log indicates a rise above normal condenser pressures, check the condenser refrigerant temperature against the leaving condenser water temperature. If this reading is more than what the design difference is supposed to be, the condenser tubes may be dirty, water flow may be incorrect, or non-condensables have contaminated the refrigerant circuit. To resolve, check the purge status. If purge is operating normally and does not have excessive run time, that may be an indication to double check pressure transducer and temperature readings along with flow.

During the tube cleaning process, use brushes specially designed to avoid scraping and scratching the tube wall. Contact your Carrier representative to obtain these brushes. Do not use wire brushes. Hard scale may require chemical treatment for its prevention or removal. Consult a water treatment specialist for proper treatment.

Water Leaks

The refrigerant moisture indicator on the refrigerant motor cooling line along with the moisture indicator located on the main and economizer EXV indicates whether there is water or air leakage during chiller operation. A refrigerant analysis should be performed to identify the moisture content within the refrigerant charge. Water leaks should be repaired immediately.

⚠ CAUTION

The chiller must be dehydrated after repair of water leaks or damage may result. See Chiller Dehydration section, page 29.

Water Treatment

Untreated or improperly treated water may result in corrosion, scaling, erosion, or algae. The services of a qualified water treatment specialist should be obtained to develop and monitor a treatment program.

⚠ CAUTION

Water must be within design flow limits, clean, and treated to ensure proper chiller performance and reduce the potential of tube damage due to corrosion, scaling, erosion, and algae. Carrier assumes no responsibility for chiller damage resulting from untreated or improperly treated water. If the unit is going to be stored for an extended period of time, Carrier has specific long-term storage requirements that are documented and available from the chiller sales group.

Inspect the VFD

Before working on any starter, shut off the chiller, then open and tag all disconnects supplying power to the starter.

⚠ CAUTION

The motor leads must be disconnected from the VFD before an insulation test is performed. The voltage generated from the tester can damage the drive components.

⚠ CAUTION

Failure to follow these procedures may result in personal injury or damage to equipment.

TO AVOID an electric shock hazard, verify that the voltage on the bus capacitors has discharged completely before servicing. Check the DC bus voltage at the power terminal block by measuring between the +DC and –DC terminals, between the +DC terminal and the chassis, and between the –DC terminal and the chassis. The voltage must be zero for all three measurements.

⚠ WARNING

DC bus capacitors retain hazardous voltages after input power has been disconnected. An isolated multimeter will be needed to measure DC bus voltage and to make resistance checks.

After disconnecting input power, wait 5 minutes for the DC bus capacitors to discharge and then check the voltage with a voltmeter rated for the DC bus voltage to ensure the DC bus capacitors are discharged before touching any internal components. Failure to observe this precaution could result in severe bodily injury or loss of life.

⚠ WARNING

The disconnect on the starter front panel does not always deenergize all internal circuits. Open all internal and remote disconnects before servicing the starter. Failure to follow this procedure may result in personal injury by electric shock.

Every 3-6 months inspect the air filter of the Danfoss VFD. To remove dirt the filter can be vacuumed or washed. If washed let the filter dry completely before reinstalling. If the dirt removed appears oily, replace filter.

Periodically vacuum accumulated debris on the internal parts. Use electrical cleaner for electrical parts as required. Perform visual inspection of the capacitors located on the DC bus and inductors. Check cooling fan operation. Check condensate drain for the VFD enclosure.

Power connections on newly installed starters may relax and loosen after a short period of operation. Turn power off and re-tighten. Recheck annually thereafter. Perform static test of the diodes, SCRs, and IGBTs to confirm the health of these components.

⚠ CAUTION

Loose power connections can cause voltage spikes, overheating, malfunctioning, or failures.

Recalibrate Pressure Transducers

Once a year, the pressure transducers should be checked against a pressure gauge reading. Check all pressure transducers: evaporator pressure, condenser pressure, refrigerant pump inlet pressure, refrigerant pump outlet pressure, bearing inlet pressure, bearing outlet pressure, and optional evaporator entering and leaving water pressure, as well as condenser entering and leaving water pressure. See Fig. 41.

Recalibrate Temperature Thermistors

Recalibrate the temperature thermistors for entering chilled water (ECW), leaving chilled water (LCW), entering condenser water (ECDW), leaving condenser water (LCDW).

Ordering Replacement Chiller Parts

When ordering Carrier specified parts, the following information must accompany an order:

- chiller model number and serial number
- name, quantity, and part number of the part required
- delivery address and method of shipment.

Lubrication System Weekly Maintenance

CHECK THE LUBRICATION SYSTEM

Mark the oil level on the reservoir sight glass, and observe the level each week while the chiller is shut down. If the level goes below the bottom sight glass window, check the oil reclaim system for proper operation. If additional oil is required, add it through the oil drain charging valve. A pump is required when adding oil against refrigerant pressure. See the "Oil Charge" on page 17 section for 19MV3 oiled compressor oil charge amount. The added oil must meet Carrier specifications; see the "Oil Specification" on page 48 section. Refer to "Changing Oil Filter" on page 48 and "Oil Changes" on page 48 sections. Any additional oil that is added should be logged by noting the amount and date. Any oil that is added due to oil loss that is not related to service will eventually return to the sump. It must be removed when the level is high. An oil heater is controlled by the PIC6 control system to maintain oil temperature (see the 19MV with PIC6 Controls Operation and Troubleshooting manual) when the compressor is off. If the PIC6 control system shows that the heater is energized and if the sump is still not heating up, the power to the oil heater may be off or the oil level may be too low. Check the oil level, the oil heater contactor voltage, and oil heater resistance. The PIC6 control system does not permit compressor start-up if the oil temperature is too low. The PIC6 control system continues with start-up only after the temperature is within allowable limits.

CHANGING OIL FILTER

Change the oil filter every two years or when the chiller is opened for repairs. The 19MV chiller has an isolatable oil filter so that the filter may be changed with the refrigerant remaining in the chiller. Use the following procedure:

1. Ensure the compressor is off and the disconnect for the compressor is open.
2. Disconnect the power to the oil pump.
3. Close the oil filter isolation valves.
4. Close isolation valves located on both ends of the oil filter. Have rags and a catch basin available to collect oil spillage.
5. Equalize the filter's higher internal pressure to ambient by connecting an oil charging hose to the Schrader valve on the oil filter housing. Collect the oil-refrigerant mixture which is discharged.
6. Remove the oil filter assembly by loosening the hex nuts on both ends of the filter assembly.
7. Insert the replacement filter assembly with the arrow on the housing pointing away from the oil pump.
8. Rotate the assembly so that the Schrader drain valve is oriented at the bottom, and tighten the connection nut on each end to a torque of approximately 30 ft-lb (41 N-m).
9. Evacuate the filter housing by placing a vacuum pump on the charging valve. Follow the normal evacuation procedures. Shut the charging valve when done and reconnect the valve so that new oil can be pumped into the filter housing. Fill with the same amount that was removed; then close the charging valve.
10. Remove the hose from the charging valve, open the isolation valves to the filter housing, and turn on the power to the pump and the motor.

OIL SPECIFICATION

If oil is added, it must meet Carrier specifications. For units using R-513A, R-515B, or R-1234ze(E) use inhibited polyolester-based synthetic compressor oil formatted for use with HFC hermetic compressors, with ISO Viscosity Grade 68. The polyolester-based oil (P/N: PP23BZ103) may be ordered from your local Carrier representative.

OIL CHANGES

Carrier recommends that a yearly oil analysis be performed to determine when to change oil and when to perform a compressor inspection. However, if yearly analysis is not performed or available, the time between oil changes should be no longer than 5 years. Additionally Carrier recommends vibration measurement done at regular intervals to obtain a signature of the moving compressor parts as part of a total preventive maintenance (TPM) program.

TO CHANGE THE OIL

1. Transfer the refrigerant into the chiller condenser vessel (for isolatable vessels) or to a pumpout storage tank.
2. Mark the existing oil level.
3. Open the control and oil heater circuit breaker.
4. When the chiller pressure is 5 psig (34 kPa) or less, drain the oil reservoir by opening the oil charging valve (Fig. 2-6). Slowly open the valve against refrigerant pressure.
5. Change the oil filter at this time. See "Changing Oil Filter" section.
6. Change the refrigerant filter at this time. See "Changing Refrigerant Filters"section.
7. Charge the chiller with oil. Charge until the oil level is equal to the oil level marked in Step 2. Turn on the power to the oil heater and let the PIC6 warm it up to at least 130°F (54.4°C). Operate the oil pump manually, using the Control Test function, for 2 minutes. For shutdown conditions, the oil level should now be equal to the amount shown in Step 2. If the oil level is above the top sight glass window, remove excess oil.

TROUBLESHOOTING GUIDE

Overview

The PIC6 control system has many features to help the operator and technician troubleshoot a 19MV chiller.

- The HMI shows the chiller's actual operating conditions and can be viewed while the unit is running.
- The HMI default screen indicates when an alarm occurs. Once all alarms have been cleared (by correcting the problems), the HMI default screen indicates normal operation. For information about displaying and resetting alarms and a list of alert codes, see the 19MV with PIC6 Controls Operation and Troubleshooting manual.
- The Configuration menu screens display information that helps to diagnose problems with chilled water temperature control, chilled water temperature control overrides, surge algorithm status, and time schedule operation.
- The quick test and quick calibration feature facilitates the transducers, the guide vane actuator, EXVs, water pumps, tower control, and other on/off outputs while the compressor is stopped. It also has the ability to lock off the compressor and turn on water pumps for pumpout operation (Maintenance Menu). The HMI shows the temperatures and pressures required during these operations.
- If an operating fault is detected, an alarm indicator is displayed on the HMI default screen. A more detailed message — along with a diagnostic message — is also stored in the Current Alarms table.
- Review the Alarms History table to view other less critical events which may have occurred. Compare timing of relevant events and alarms.

For detailed information about alarms, see the 19MV with Controls Operation and Troubleshooting manual. Press the bell icon in the top right corner of the home screen to access current alarms and alarm history, and to reset alarms.

Checking Display Messages

The first area to check when troubleshooting the 19MV is the HMI display. Status messages are displayed at the bottom of the screen, and the alarm icon indicates a fault. For a complete list of alarms, see the 19MV with Controls Operation and Troubleshooting manual.

Checking Temperature Sensors

All temperature sensors are thermistor-type sensors. This means that the resistance of the sensor varies with temperature. All sensors have the same resistance characteristics. If the controls are on, determine sensor temperature by measuring voltage drop; if the controls are powered off, determine sensor temperature by measuring resistance. Compare the readings to the values listed in Tables 12 and 13.

RESISTANCE CHECK

Turn off the control power and, from the module, disconnect the terminal plug of the sensor in question. With a digital ohmmeter, measure sensor resistance between receptacles as designated by the wiring diagram. The resistance and corresponding temperature are listed in Tables 12 and 13. Check the resistance of both wires to ground. This resistance should be infinite.

VOLTAGE DROP

The voltage drop across any energized sensor can be measured with a digital voltmeter while the control is energized. Tables 12 and 13 list the relationship between temperature and sensor voltage drop (volts dc measured across the energized sensor). Exercise care when measuring voltage to prevent damage to the sensor leads, connector plugs, and modules. Sensors should also be checked at the sensor plugs.

⚠ CAUTION

Relieve all refrigerant pressure or drain the water before removing any thermowell threaded into the refrigerant pressure boundary. Failure to do so could result in personal injury and equipment damage.

CHECK SENSOR ACCURACY

Place the sensor in a medium of known temperature and compare that temperature to the measured reading. The thermometer used to determine the temperature of the medium should be of laboratory quality with 0.5°F (0.25°C) graduations. The sensor in question should be accurate to within 2°F (1.2°C).

Note that the PIC6 control module, MAINTENANCE menu, offers a temperature sensor calibration feature where the sensor temperature can be offset. Note that only the four water temperatures can be calibrated. To use this feature, place the sensor at 32°F (0°C) or other known temperature. Read the raw temperature and calculate offset based on the reading seen in the TEMP_CAL menu. Enter and execute the offset, which cannot exceed ± 2°F (1.2°C).

See Fig. 2 for sensor locations. The sensors are immersed directly in the refrigerant or water circuits. When installing a new sensor, apply a pipe sealant or thread sealant to the sensor threads.

An additional thermistor, factory installed in the bottom of the evaporator barrel, is displayed as Evap Refrig Liquid Temp on the TEMPERATURES display screen. This thermistor provides additional protection against a loss of water flow.

MOTOR TEMPERATURE SENSORS

See Fig. 49 for the location and wiring of the two motor temperature sensors.

Table 12 — Thermistor Temperature (°F) vs. Resistance/Voltage Drop

TEMPERATURE (°F)	PIC VOLTAGE DROP (V)	RESISTANCE (Ohms)	TEMPERATURE (°F)	PIC VOLTAGE DROP (V)	RESISTANCE (Ohms)	TEMPERATURE (°F)	PIC VOLTAGE DROP (V)	RESISTANCE (Ohms)
–25	4.700	97,706	**66**	2.565	6,568	**157**	0.630	893
–24	4.690	94,549	**67**	2.533	6,405	**158**	0.619	876
–23	4.680	91,474	**68**	2.503	6,246	**159**	0.609	859
–22	4.670	88,480	**69**	2.472	6,092	**160**	0.599	843
–21	4.659	85,568	**70**	2.440	5,942	**161**	0.589	827
–20	4.648	82,737	**71**	2.409	5,796	**162**	0.579	812
–19	4.637	79,988	**72**	2.378	5,655	**163**	0.570	797
–18	4.625	77,320	**73**	2.347	5,517	**164**	0.561	782
–17	4.613	74,734	**74**	2.317	5,382	**165**	0.551	768
–16	4.601	72,229	**75**	2.287	5,252	**166**	0.542	753
–15	4.588	69,806	**76**	2.256	5,124	**167**	0.533	740
–14	4.576	67,465	**77**	2.227	5,000	**168**	0.524	726
–13	4.562	65,205	**78**	2.197	4,880	**169**	0.516	713
–12	4.549	63,027	**79**	2.167	4,764	**170**	0.508	700
–11	4.535	60,930	**80**	2.137	4,650	**171**	0.499	687
–10	4.521	58,915	**81**	2.108	4,539	**172**	0.491	675
–9	4.507	56,981	**82**	2.079	4,432	**173**	0.484	663
–8	4.492	55,129	**83**	2.050	4,327	**174**	0.476	651
–7	4.477	53,358	**84**	2.021	4,225	**175**	0.468	639
–6	4.461	51,669	**85**	1.993	4,125	**176**	0.460	628
–5	4.446	50,062	**86**	1.965	4,028	**177**	0.453	616
–4	4.429	48,536	**87**	1.937	3,934	**178**	0.445	605
–3	4.413	47,007	**88**	1.909	3,843	**179**	0.438	595
–2	4.396	45,528	**89**	1.881	3,753	**180**	0.431	584
–1	4.379	44,098	**90**	1.854	3,667	**181**	0.424	574
0	4.361	42,715	**91**	1.827	3,582	**182**	0.418	564
1	4.344	41,380	**92**	1.800	3,500	**183**	0.411	554
2	4.325	40,089	**93**	1.773	3,420	**184**	0.404	544
3	4.307	38,843	**94**	1.747	3,342	**185**	0.398	535
4	4.288	37,639	**95**	1.721	3,266	**186**	0.392	526
5	4.269	36,476	**96**	1.695	3,192	**187**	0.385	516
6	4.249	35,354	**97**	1.670	3,120	**188**	0.379	508
7	4.229	34,270	**98**	1.644	3,049	**189**	0.373	499
8	4.209	33,224	**99**	1.619	2,981	**190**	0.367	490
9	4.188	32,214	**100**	1.595	2,914	**191**	0.361	482
10	4.167	31,239	**101**	1.570	2,849	**192**	0.356	474
11	4.145	30,298	**102**	1.546	2,786	**193**	0.350	466
12	4.123	29,389	**103**	1.523	2,724	**194**	0.344	458
13	4.101	28,511	**104**	1.499	2,663	**195**	0.339	450
14	4.079	27,663	**105**	1.476	2,605	**196**	0.333	442
15	4.056	26,844	**106**	1.453	2,547	**197**	0.328	435
16	4.033	26,052	**107**	1.430	2,492	**198**	0.323	428
17	4.009	25,285	**108**	1.408	2,437	**199**	0.318	421
18	3.985	24,544	**109**	1.386	2,384	**200**	0.313	414
19	3.960	23,826	**110**	1.364	2,332	**201**	0.308	407
20	3.936	23,130	**111**	1.343	2,282	**202**	0.304	400
21	3.911	22,455	**112**	1.321	2,232	**203**	0.299	393
22	3.886	21,800	**113**	1.300	2,184	**204**	0.294	387
23	3.861	21,163	**114**	1.279	2,137	**205**	0.290	381
24	3.835	20,556	**115**	1.259	2,092	**206**	0.285	374
25	3.808	19,967	**116**	1.239	2,047	**207**	0.281	368
26	3.782	19,396	**117**	1.219	2,003	**208**	0.277	362
27	3.755	18,843	**118**	1.200	1,961	**209**	0.272	356
28	3.727	18,307	**119**	1.180	1,920	**210**	0.268	351
29	3.700	17,787	**120**	1.161	1,879	**211**	0.264	345
30	3.672	17,284	**121**	1.143	1,840	**212**	0.260	339
31	3.644	16,797	**122**	1.124	1,801	**213**	0.256	334
32	3.617	16,325	**123**	1.106	1,764	**214**	0.252	329
33	3.588	15,868	**124**	1.088	1,727	**215**	0.248	323
34	3.559	15,426	**125**	1.070	1,691	**216**	0.245	318
35	3.530	14,997	**126**	1.053	1,656	**217**	0.241	313
36	3.501	14,582	**127**	1.036	1,622	**218**	0.237	308
37	3.471	14,181	**128**	1.019	1,589	**219**	0.234	303
38	3.442	13,791	**129**	1.002	1,556	**220**	0.230	299
39	3.412	13,415	**130**	0.986	1,524	**221**	0.227	294
40	3.382	13,050	**131**	0.969	1,493	**222**	0.224	289
41	3.353	12,696	**132**	0.953	1,463	**223**	0.220	285
42	3.322	12,353	**133**	0.938	1,433	**224**	0.217	280
43	3.291	12,021	**134**	0.922	1,404	**225**	0.214	276
44	3.260	11,699	**135**	0.907	1,376	**226**	0.211	272
45	3.229	11,386	**136**	0.893	1,348	**227**	0.208	267
46	3.198	11,082	**137**	0.878	1,321	**228**	0.205	263
47	3.167	10,787	**138**	0.864	1,295	**229**	0.203	259
48	3.135	10,500	**139**	0.849	1,269	**230**	0.198	255
49	3.104	10,221	**140**	0.835	1,244	**231**	0.195	251
50	3.074	9,949	**141**	0.821	1,219	**232**	0.192	248
51	3.042	9,689	**142**	0.808	1,195	**233**	0.190	244
52	3.010	9,436	**143**	0.795	1,172	**234**	0.187	240
53	2.978	9,190	**144**	0.782	1,149	**235**	0.184	236
54	2.946	8,951	**145**	0.769	1,126	**236**	0.182	233
55	2.914	8,719	**146**	0.756	1,104	**237**	0.179	229
56	2.882	8,494	**147**	0.744	1,083	**238**	0.176	226
57	2.850	8,275	**148**	0.731	1,062	**239**	0.174	223
58	2.819	8,062	**149**	0.719	1,041	**240**	0.172	219
59	2.788	7,855	**150**	0.707	1,021	**241**	0.169	216
60	2.756	7,655	**151**	0.696	1,002	**242**	0.167	213
61	2.724	7,460	**152**	0.684	983	**243**	0.164	210
62	2.692	7,271	**153**	0.673	964	**244**	0.162	207
63	2.660	7,088	**154**	0.662	945	**245**	0.160	204
64	2.628	6,909	**155**	0.651	928	**246**	0.158	201
65	2.596	6,736	**156**	0.640	910	**247**	0.155	198
						248	0.153	195

Table 13 — Thermistor Temperature (°C) vs. Resistance/Voltage Drop

TEMPERATURE (°C)	PIC VOLTAGE DROP (V)	RESISTANCE (Ohms)
–33	4.722	105 616
–32	4.706	99 640
–31	4.688	93 928
–30	4.670	88 480
–29	4.650	83 297
–28	4.630	78 377
–27	4.608	73 722
–26	4.586	69 332
–25	4.562	65 205
–24	4.538	61 343
–23	4.512	57 745
–22	4.486	54 411
–21	4.458	51 341
–20	4.429	48 536
–19	4.399	45 819
–18	4.368	43 263
–17	4.336	40 858
–16	4.303	38 598
–15	4.269	36 476
–14	4.233	34 484
–13	4.196	32 613
–12	4.158	30 858
–11	4.119	29 211
–10	4.079	27 663
–9	4.037	26 208
–8	3.994	24 838
–7	3.951	23 545
–6	3.906	22 323
–5	3.861	21 163
–4	3.814	20 083
–3	3.765	19 062
–2	3.716	18 097
–1	3.667	17 185
0	3.617	16 325
1	3.565	15 513
2	3.512	14 747
3	3.459	14 023
4	3.406	13 341
5	3.353	12 696
6	3.298	12 087
7	3.242	11 510
8	3.185	10 963
9	3.129	10 444
10	3.074	9 949
11	3.016	9 486
12	2.959	9 046
13	2.901	8 628
14	2.844	8 232
15	2.788	7 855
16	2.730	7 499
17	2.672	7 160
18	2.615	6 839
19	2.559	6 535
20	2.503	6 246
21	2.447	5 972
22	2.391	5 711
23	2.335	5 463
24	2.280	5 226
25	2.227	5 000
26	2.173	4 787
27	2.120	4 583
28	2.067	4 389
29	2.015	4 204
30	1.965	4 028
31	1.914	3 861
32	1.865	3 701
33	1.816	3 549
34	1.768	3 404
35	1.721	3 266
36	1.675	3 134
37	1.629	3 008
38	1.585	2 888
39	1.542	2 773
40	1.499	2 663
41	1.457	2 559
42	1.417	2 459
43	1.377	2 363

TEMPERATURE (°C)	PIC VOLTAGE DROP (V)	RESISTANCE (Ohms)
44	1.338	2 272
45	1.300	2 184
46	1.263	2 101
47	1.227	2 021
48	1.192	1 944
49	1.158	1 871
50	1.124	1 801
51	1.091	1 734
52	1.060	1 670
53	1.029	1 609
54	0.999	1 550
55	0.969	1 493
56	0.941	1 439
57	0.913	1 387
58	0.887	1 337
59	0.861	1 290
60	0.835	1 244
61	0.811	1 200
62	0.787	1 158
63	0.764	1 117
64	0.741	1 079
65	0.719	1 041
66	0.698	1 006
67	0.677	971
68	0.657	938
69	0.638	906
70	0.619	876
71	0.601	846
72	0.583	818
73	0.566	791
74	0.549	765
75	0.533	740
76	0.518	715
77	0.503	692
78	0.488	670
79	0.474	648
80	0.460	628
81	0.447	608
82	0.434	588
83	0.422	570
84	0.410	552
85	0.398	535
86	0.387	518
87	0.376	502
88	0.365	487
89	0.355	472
90	0.344	458
91	0.335	444
92	0.325	431
93	0.316	418
94	0.308	405
95	0.299	393
96	0.291	382
97	0.283	371
98	0.275	360
99	0.267	349
100	0.260	339
101	0.253	330
102	0.246	320
103	0.239	311
104	0.233	302
105	0.227	294
106	0.221	286
107	0.215	278
108	0.210	270
109	0.205	262
110	0.198	255
111	0.193	248
112	0.188	242
113	0.183	235
114	0.178	229
115	0.174	223
116	0.170	217
117	0.165	211
118	0.161	205
119	0.157	200
120	0.153	195

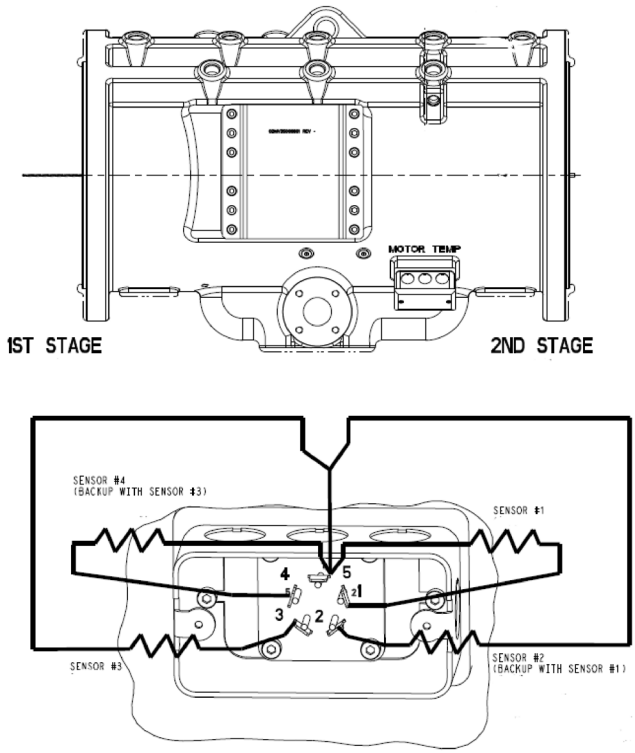

Fig. 49 — Motor Housing Temperature Sensors

Checking Pressure Transducers

There are 4 factory-installed pressure transducers measuring refrigerant pressure: refrigerant pump suction, bearing inlet pressure, bearing outlet pressure, and economizer vapor discharge pressure. With the IOB4 option installed there are field options to install evaporator and condenser entering and leaving pressure transducers.

These transducers can be calibrated if necessary. It is necessary to calibrate at initial start-up, particularly at high altitude locations, to ensure the proper refrigerant temperature/pressure relationship. Each transducer is supplied with 5 vdc power. If the power supply fails, a transducer voltage reference alarm occurs. If the transducer reading is suspected of being faulty, check the 5V Sensor Power Monitor voltage. It should be 5 vdc ± 0.5 v as displayed in ***Maintenance Menu → Maintenance Others***, where all the transducer voltages are shown. Recalibrate and replace the transducer if correct voltage is being supplied, but displayed values are incorrect. Additionally, check that any external inputs have not been grounded.

TRANSDUCER REPLACEMENT

All transducers except the compressor high pressure switch (located on discharge pipe) are mounted on Schrader-type fittings. Transducers installed on Schrader-type fittings can be removed without the need to remove refrigerant from the vessel when replacing the transducers. Disconnect the transducer wiring. *Do not pull on the transducer wires*. Unscrew the transducer from the Schrader fitting. When installing a new transducer, do not use pipe sealer (which can plug the sensor). Put the plug connector back on the sensor and snap into place. Check for refrigerant leaks.

⚠ WARNING

Be sure to use a back-up wrench on the Schrader fitting whenever removing a transducer, since the Schrader fitting may back out with the transducer, causing a large leak and possible injury to personnel.

EVAPORATOR AND CONDENSER PRESSURE TRANSDUCER CALIBRATION

Calibration can be checked by comparing the pressure readings from the transducer to an accurate refrigeration gauge reading. These readings can be viewed or calibrated from the HMI screen. The transducer can be checked and calibrated at 2 pressure points. These calibration points are 0 psig (0 kPa) and between 25 and 250 psig (173 and 1724 kPa). Connect pressure transducer to Schrader connection. To calibrate these transducers:

1. Shut down compressor, evaporator, and condenser pumps.

   NOTE: There should be no flow through the heat exchangers.
2. Disconnect transducer in question from its Schrader fitting for evaporator or condenser transducer calibration. For other pressure or flow device calibration, leave transducer in place.

   NOTE: If the evaporator or condenser vessels are at 0 psig (0 kPa) or are open to atmospheric pressure, the transducers can be calibrated for zero without removing the transducer from the vessel.
3. Access the PRESSURE or (if water side pressure) HYDRAULIC STATUS screen and view the particular transducer reading. To calibrate pressure or waterside flow device, view the particular reading. It should read 0 psig (0 kPa). If the reading is not 0 psig (0 kPa), but within ± 5 psig (35 kPa), the value may be set to zero from the Maintenance Menu while the appropriate transducer parameter is highlighted. The value will now go to zero.
4. If the transducer value is not within the calibration range, the transducer returns to the original reading. If the pressure is within the allowed range (noted above), check the voltage ratio of the transducer. To obtain the voltage ratio, divide the voltage (dc) input from the transducer by the supply voltage signal or measure across the positive (+ red) and negative (– black) leads of the transducer. The input to reference voltage ratio must be between 0.80 and 0.11 for the software to allow calibration. Rotate the waterside flow pressure device from the inlet nozzle to the outlet nozzle and repeat this step. If rotating the waterside flow device does not allow calibration, pressurize the transducer until the ratio is within range. Then attempt calibration again.
5. Installation of pressure transducers into water nozzles using flushable dirt leg trap is suggested; see Fig. 50. Pressures can be calibrated between 100 and 250 psig (689.5 and 1723.7 kPa) by attaching a regulated 250 psig (1724 kPa) pressure (usually from a nitrogen cylinder). For calibration, access the Pressure Sensor Calibration Menu from the Maintenance Menu and calibrate the appropriate sensor.

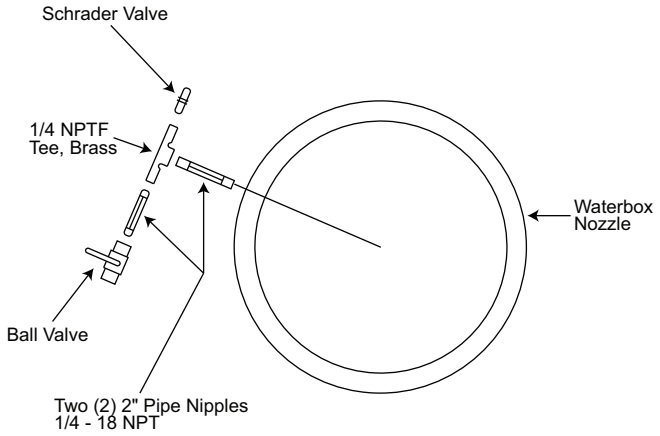

Fig. 50 — Suggested Installation of Pressure Transducers into Water Nozzles Using Flushable Dirt Leg Trap

The PIC6 control system does not allow calibration if the transducer is too far out of calibration. In this case, a new transducer must be installed and re-calibrated.

The EXV motor winding resistance can be checked by removal of the EXV plug. The resistance across coil I should be 52 Ohm (±10%) and the resistance across coil II should be 52 Ohm (±10%). See Fig. 51.

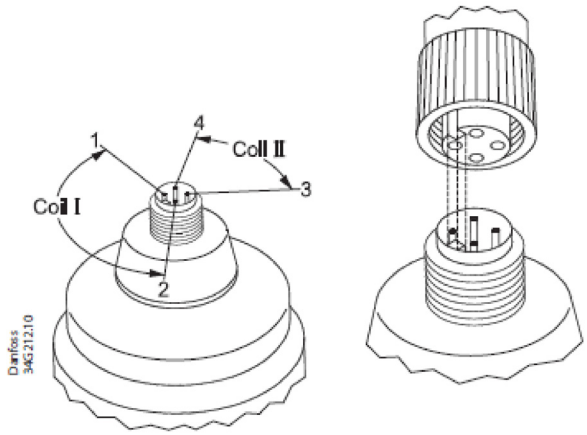

Fig. 51 — EXV Coil Check

Condenser Level

Float level is measured by 0-5V proportional float sensor. Float sensor is located inside float level sensor housing (Fig. 7). Condenser sub-cooler liquid level can also be verified through the sightglasses on the outboard side of the condenser. The resistance across the sensor red (vdc) and black (ground) wire should read approximately 1650 ohm in unpowered state. The sensor voltage output between white (output) and black (ground) wire is proportional to red-black voltage depending on float location on stem.

High Altitude Locations

Because the chiller is initially calibrated at sea level, it is necessary to recalibrate the pressure transducers if the chiller has been moved to a high altitude location. Note that Atmospheric Pressure can be adjusted in the Service Parameters Menu (located in the Configuration Menu).

Quick Test and 19MV Quick Test

The Quick Test feature is located in the Main Menu. Use this feature to test chiller status, test the status of various actuators, view water temperature deltas, and test pump and relays, as well as EXCSV (expansion control system valve), alarms, condenser, and chilled water pumps. The tests can help to determine whether a switch is defective or a pump relay is not operating, as well as other useful troubleshooting issues.

Quick Calibration

Use this menu to calibrate IGVs and EXCSV valve.

End of Life and Equipment Disposal

This equipment has an average design life span of 25 years and is constructed of primarily steel and copper. Content of control panels includes but is not limited to common electrical components such as fuses, starters, circuit breakers, wire, capacitors and printed circuit boards. Prior to disposal it will be necessary to remove all fluids such as water, refrigerant, and oil (if applicable) using the current industry guidelines for recovery/disposal. In addition electrical components may need to be collected for recovery and recycling as per local directives.

Physical Data

Figures 52-57 provide additional information on component weights, compressor fits and clearances, physical and electrical data, and wiring schematics for the operator's convenience during troubleshooting.

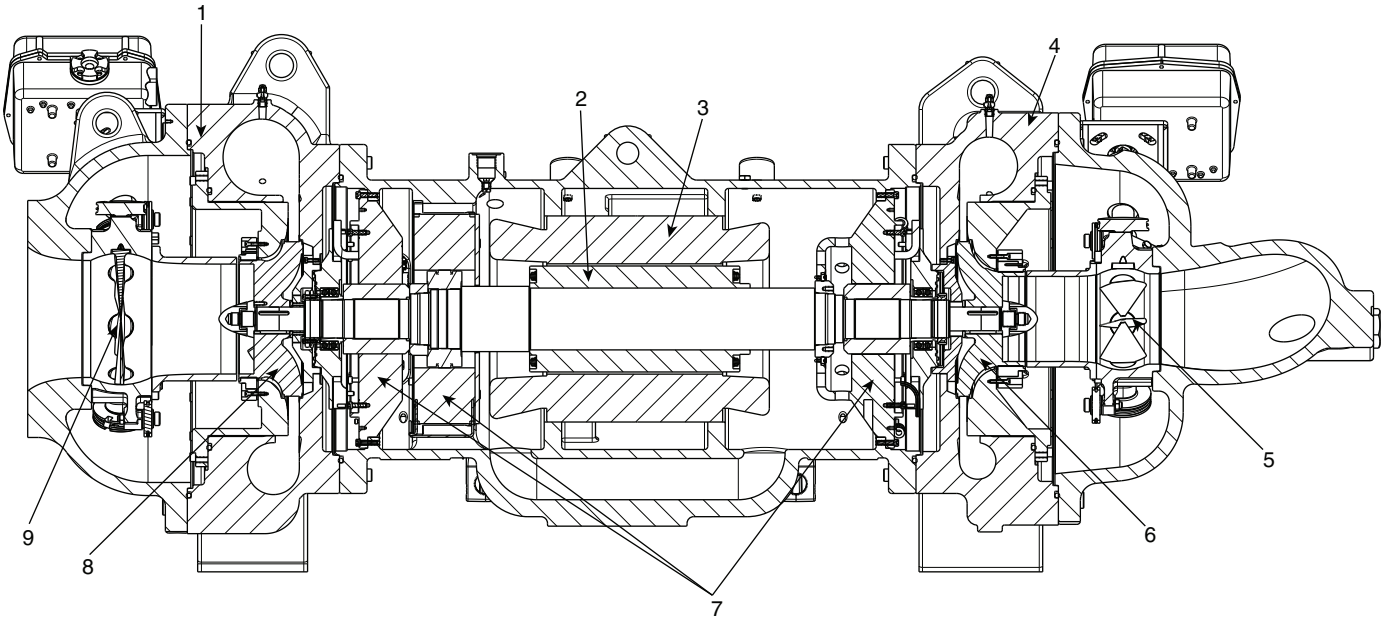

LEGEND
1 — First Stage Volute
2 — Permanent Magnet Motor Rotor
3 — Motor Stator
4 — Second Stage Volute
5 — Second Stage Inlet Guide Vane
6 — Second Stage Impeller
7 — Magnetic Bearing System
8 — First Stage Impeller
9 — First Stage Inlet Guide Vane

Fig. 52 — 19MV Magnetic Bearing Compressor Components

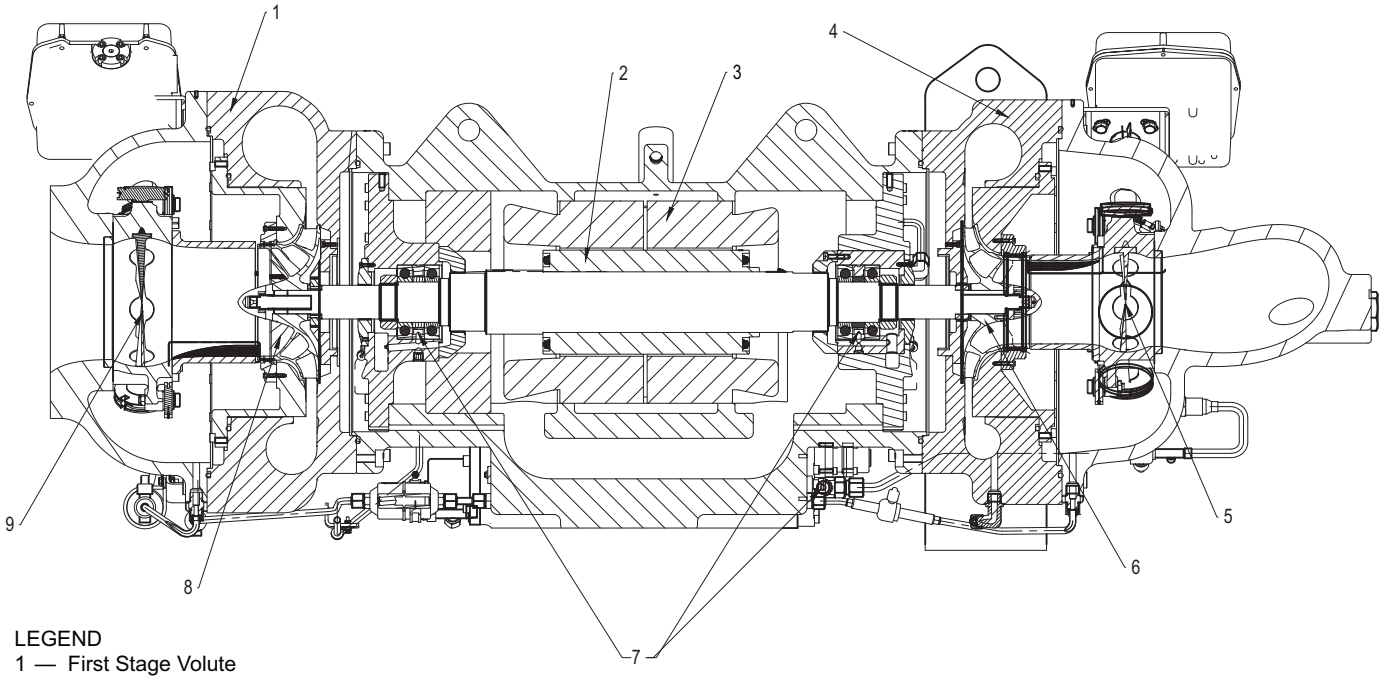

LEGEND
1 — First Stage Volute
2 — Permanent Magnet Motor Rotor
3 — Motor Stator
4 — Second Stage Volute
5 — Second Stage Inlet Guide Vane
6 — Second Stage Impeller
7 — Oil Bearing System
8 — First Stage Impeller
9 — First Stage Inlet Guide Vane

Fig. 53 — 19MV Roller Element Bearing Compressor Components

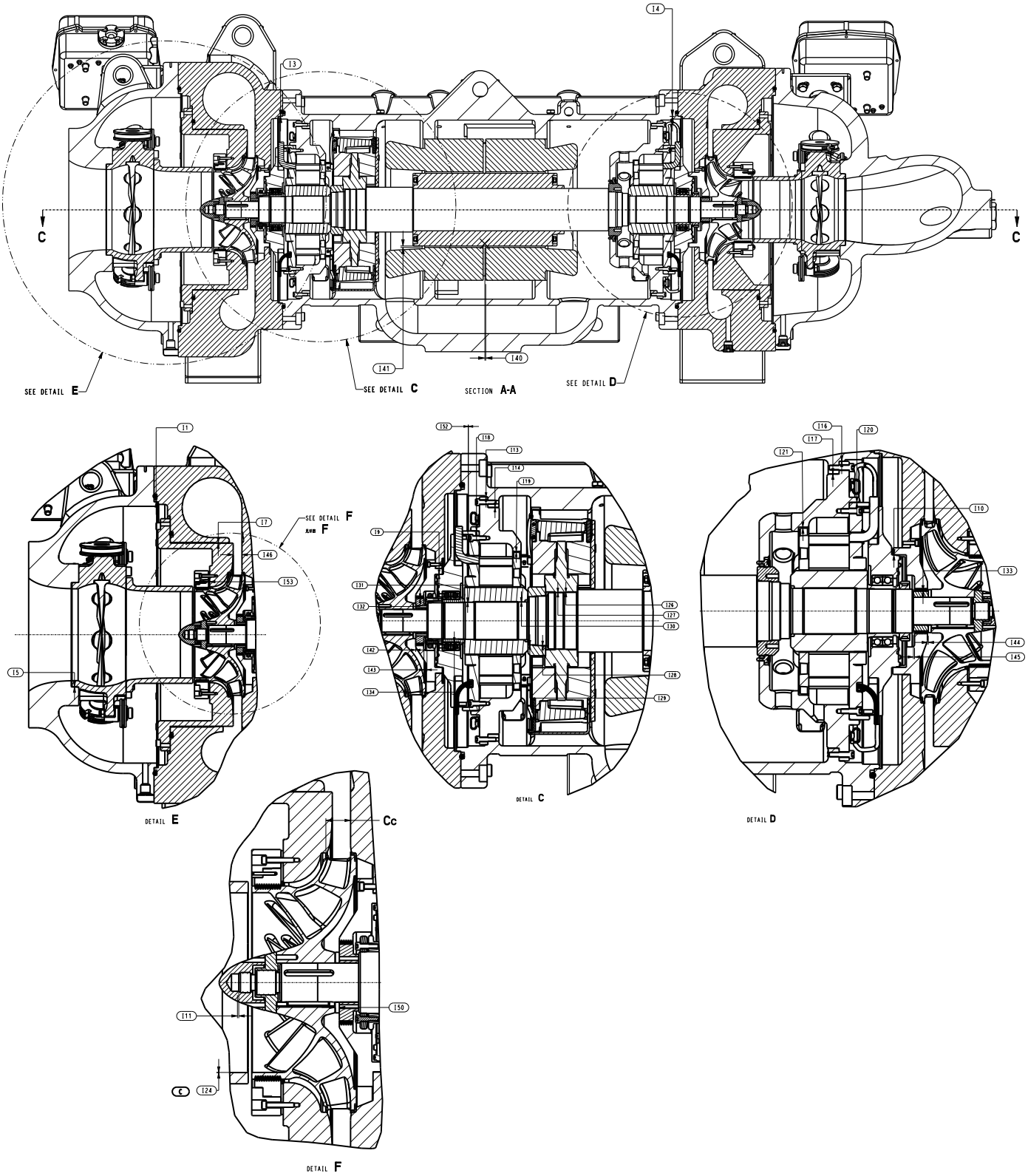

Fig. 54 — 19MV Magnetic Bearing Compressor Component Dimensions

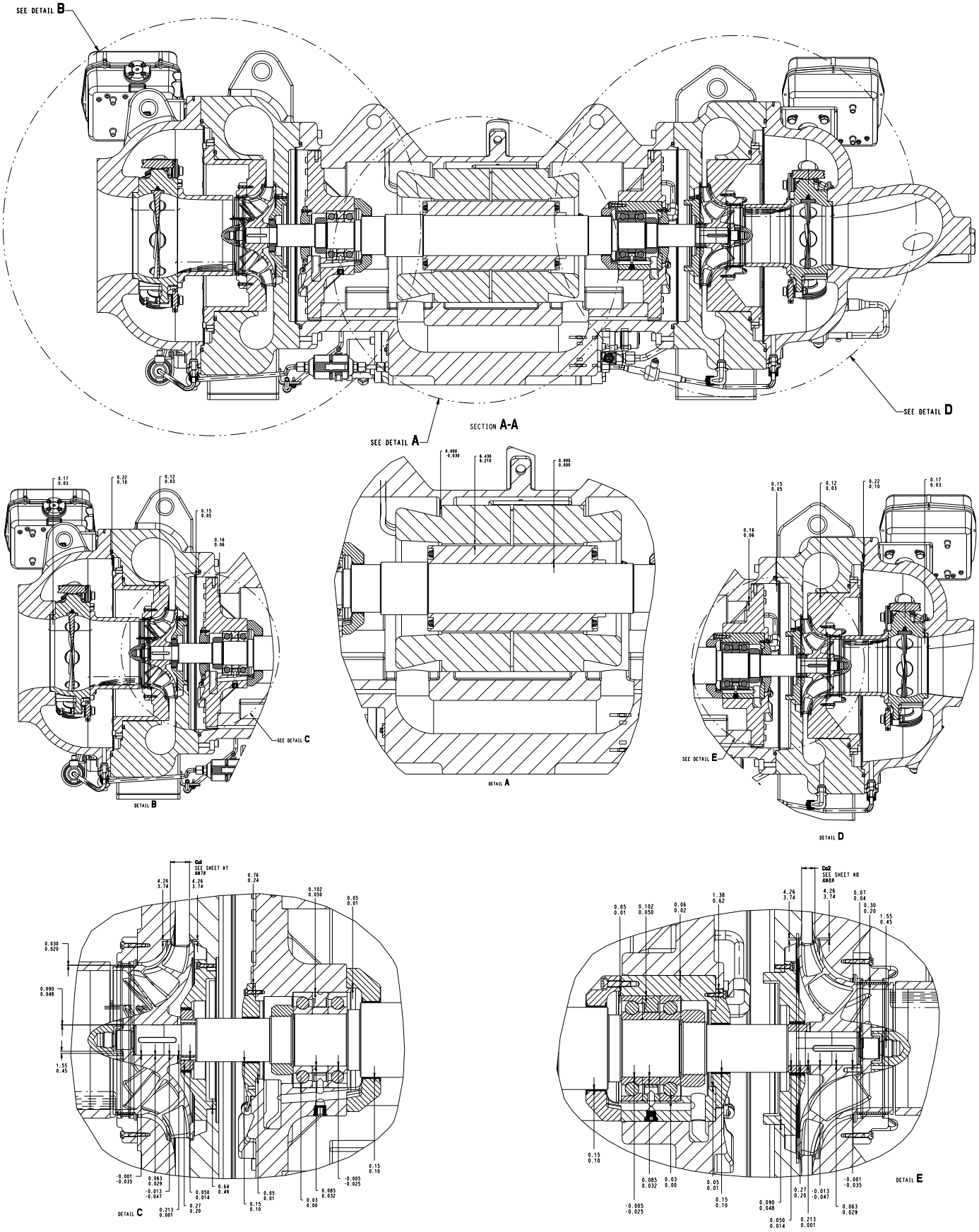

Fig. 55 — 19MV Roller Element Bearing Compressor Component Dimensions

First Stage Polaris Impeller Shimming Procedure							
Impeller Code	Tons	Impeller Diameter (mm)	Machined Bar Height	Impeller Lip to Machined Bar	Impeller Spacer Length	Design Distance from Impeller Lip to Discharge Wall	Shim Thickness Required
		227	B	A	S_m	C_c (mm)	$S_f=C_c+S_m-A-B-FLOAT/2$
39	350					14.430	
49	400					15.980	
59	450					17.490	
69	500					19.010	
79	550					20.520	
89	600					22.000	

Second Stage Polaris Impeller Shimming Procedure							
Impeller Code	Tons	Impeller Diameter (mm)	Machined Bar Height	Impeller Lip to Machined Bar	Impeller Spacer Length	Design Distance from Impeller Lip to Discharge Wall	Shim Thickness Required
		227	B	A	S_m	C_c (mm)	$S_f=C_c+S_m-A-B-FLOAT/2$
39	350					9.369	
49	400					10.286	
59	450					11.197	
69	500					12.113	
79	550					12.995	
89	600					13.900	

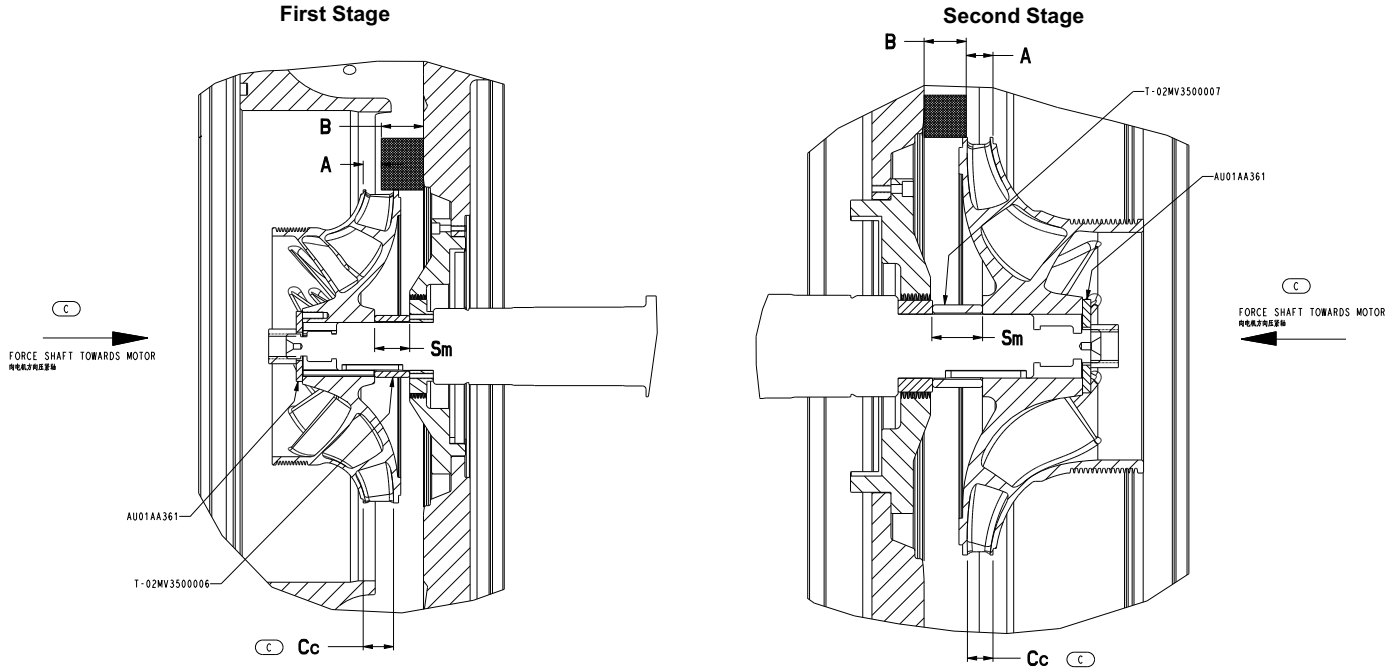

Fig. 56 — 19MV Roller Element Bearing Compressor First and Second Stage Polaris Impeller

First Stage Polaris Impeller Shimming Procedure							
Impeller Code	Tons	Impeller Diameter (mm)	Machined Bar Height	Impeller Lip to Machined Bar	Impeller Spacer Length	Design Distance from Impeller Lip to Discharge Wall	Shim Thickness Required
		227	B	A	S_m	C_c (mm)	$S_f=C_{c1}+S_m-A-B-FLOAT/2$
39	350					14.430	
49	400					15.980	
59	450					17.490	
69	500					19.010	
79	550					20.520	
89	600					22.000	
Second Stage Polaris Impeller Shimming Procedure							
Impeller Code	Tons	Impeller Diameter (mm)	Machined Bar Height	Impeller Lip to Machined Bar	Impeller Spacer Length	Design Distance from Impeller Lip to Discharge Wall	Shim Thickness Required
		227	B	A	S_m	C_c (mm)	$S_f=C_{c2}+S_m-A-B-FLOAT/2$
39	350					9.369	
49	400					10.286	
59	450					11.197	
69	500					12.113	
79	550					12.995	
89	600					13.900	

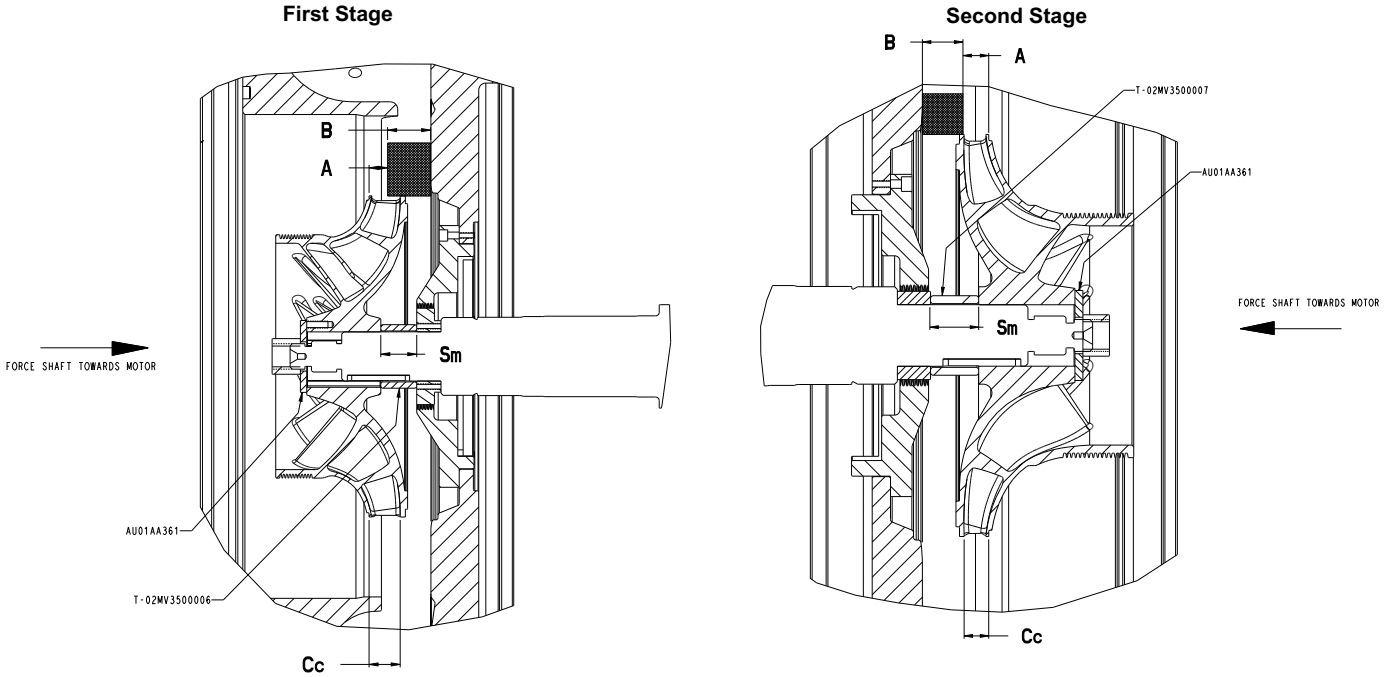

Fig. 57 — 19MV Oiled Compressor First and Second Stage Polaris Impeller

APPENDIX A — CCN COMMUNICATION WIRING FOR MULTIPLE CHILLERS (TYPICAL)

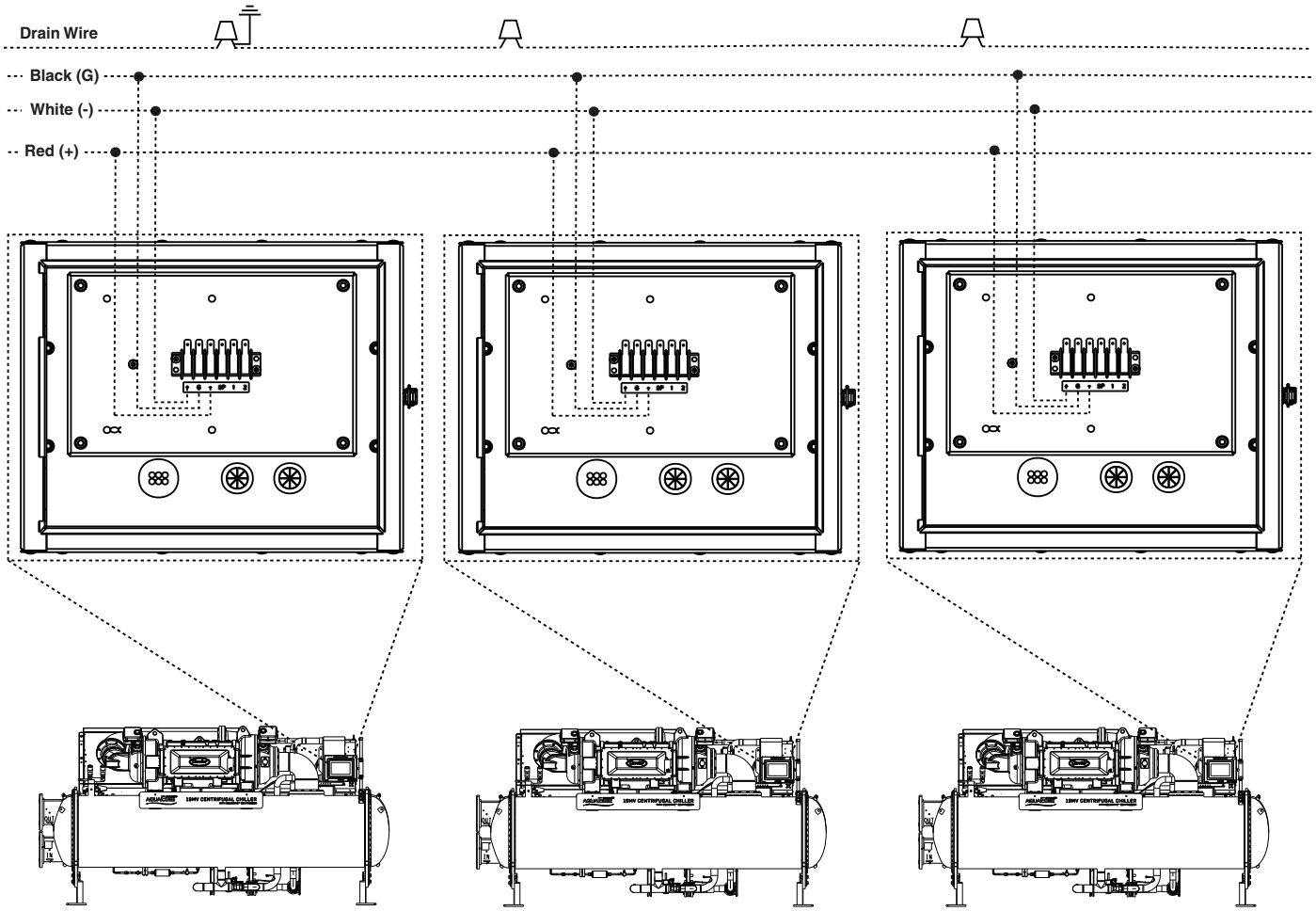

NOTE : Field-supplied terminal strip must be located in control panel.

APPENDIX B — MAINTENANCE SUMMARY AND LOG SHEETS

19MV Maintenance Interval Requirements[a]

WEEKLY			
COMPRESSOR	None.	**CONTROLS**	Review PIC6 Alarm/Alert History.
EVAPORATOR	None.	**VFD**	None.
CONDENSER	None.	**UPS**	PIC6 automatically performs UPS Discharge Level test of the battery. Alert 117 will be active should the test fail. Should Alert 117 become active the battery will need to be replaced within 2 weeks. Upon replacement, the new battery must be acknowledged in the UPS Config menu (Battery Replacement Done = Yes). If no action is taken UPS Battery Replacement Alarm 481 will be active, resulting in chiller shutdown.
MONTHLY			
COMPRESSOR	None.	**CONTROLS**	None.
FIRST YEAR ANNUAL MAINTENANCE			
COMPRESSOR	Replace motor coolant line filter drier.	**EXVs and HXs**	Clean EXV strainers. Inspect and clean evaporator tubes. Confirm there is no foreign debris in the tubes or water boxes from the water system.
ANNUALLY			
COMPRESSOR	Change motor cooling line filter drier. Leak test. For 19MV-, replace desiccant packet inside MBC cavity. For 19MVR, perform vibration measurement and remove oil sample for analysis.	**CONTROLS**	Perform general cleaning. Tighten connections. Check pressure transducers. Confirm accuracy of thermistors. Complete a MBC clearance check. Record MBC drop counts against the limit.
EVAPORATOR	Inspect all pressure relief devices. Leak test. Verify water pressure differential. Inspect water pumps. Send refrigerant sample out for analysis. Replace liquid strainer in inhibitor reclaim line (closest to evaporator inlet).	**VFD**	Perform general cleaning. Tighten connections. Perform visual inspection of the capacitors located on the DC bus and inductors. Meg Ohm test the motor. Check cooling fan operation. Replace or clean air filter.
CONDENSER	Inspect and clean condenser tubes. Leak test. Verify water pressure differential. Inspect water pumps and cooling tower.	**POWER PANEL**	Perform general cleaning of air filter located in the door of the high voltage section. Filter mesh is made of washable aluminum. Verify that fan is operating. Fan exit is located on the back of the high voltage section. Fan will operate when enclosure temperature exceeds 70°F (21°C). Replace the motor coolant line filter drier.
EVERY 3 TO 5 YEARS			
COMPRESSOR	None.	**CONTROLS**	Replace UPS battery.
EVAPORATOR	Perform eddy current test. Clean cooler and condenser tubes before eddy current test is performed.	**VFD**	None.
CONDENSER	Inspect EXVs and clean or replace strainers. Perform eddy current test.		
SEASONAL SHUTDOWN or EXTENDED SHUTDOWN			
COMPRESSOR	None.	**CONTROLS**	None.
EVAPORATOR	Isolate and drain waterbox. Remove waterbox cover from one end. Use compressed air to clear tubes. Or periodically circulate treated water through the heat exchanger.	**VFD**	None.
CONDENSER	Isolate and drain waterbox. Remove waterbox cover from one end. Use compressed air to clear tubes. Or periodically circulate treated water through the heat exchanger.		

NOTE(S):

a. Equipment failures caused by lack of adherence to the Maintenance Interval Requirements are not covered under warranty.

APPENDIX C — Remote Connectivity Setup (by Carrier Service)

Introduction

Cellular Remote Connectivity is a system developed by Carrier to remotely monitor a chiller. It consists of a PIC6 controller, ethernet switch, cellular modem, and an antenna. The option is included standard with all applied 19 Series equipment. For a new chiller there is a free period of operation with remote connectivity after commissioning. Attached documentation is based on use of Sierra wireless router/modem. This appendix describes typical commissioning steps required for a chiller supplied with the Remote Connectivity option. For support or when completed contact the Command Center at 1-833-257-6280 or email at EETSupport@carrier.com. Typical component interactions are shown in Fig. A.

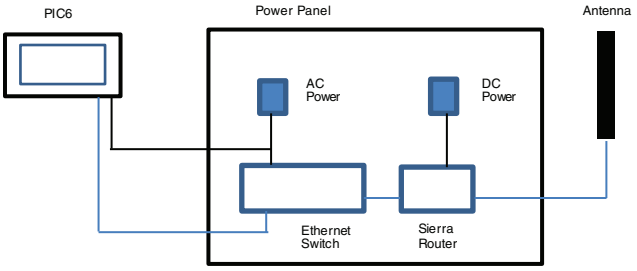

Fig. A — Remote Connectivity

Verification and Testing

First locate the cellular antenna which is located in the chiller control/power panel. This component is not installed at the factory since optimum mounting location is needed to be identified at the site as part of Remote Connectivity commissioning.

Next, identify the location of the router and ethernet switch in the power panel. There will typically be hazardous voltage in the control panel where the remote connectivity hardware pieces are installed. Therefore make all connections prior to connecting power to the chiller as otherwise it is required to wear appropriate PPE to protect against arch flash potential and other electrical hazards.

1. Verify that PIC6 is connected via ethernet to the ethernet switch.
2. Verify that antenna is installed to cellular antenna connection. See Fig. B.

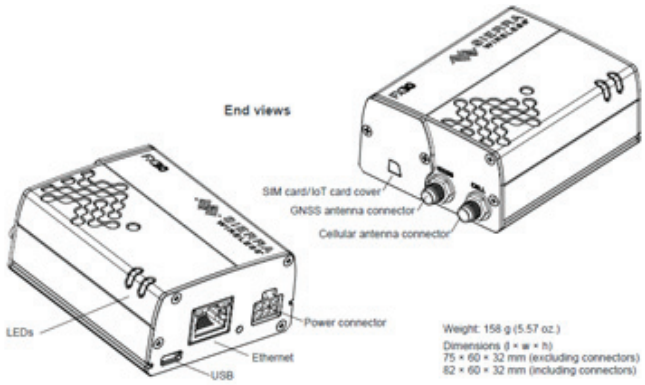

Fig. B — End Views of Remote Connectivity Hardware

3. Verify that a SIM card is installed (before power up).
4. Modem powers up when power is applied to chiller. The Power LED will be off when there is no power applied. The Power LED will be solid red when power is on and there is no cellular signal and solid green when attached to a cellular network. The User LED is not used. See Fig. C.
5. Navigate to ***PIC6 System Configuration→Ethernet Configuration*** and record the PIC6 MAC address of ETH0 (example 52:CC:00:02:11:C4).
6. Default ethernet IP address for the Sierra modem is 169.254.1.2. Set the interface for the PIC6 ethernet port which is going to be used to 169.254.101 for the first chiller and if multiple chillers increase last digit by one for each chiller. APPLY the setting in the PIC6 menu. Up to a total of 5 chillers can be installed to one modem (if required).
7. For the PIC6 ethernet port which is going to be used ensure that Subnet mask is 255.255.0.0.
8. Navigate to the ***PIC6 System Configuration→Gateway/DNS Config*** menu. Set Gateway 0 IP to 169.254.1.2 and Gateway Destination/Mask to 0.0.0.0/0 and APPLY the changes.

   NOTE: Gateway 1 is generally not used in SmartService applications. However, presently you must set Gateway 1 to the same settings as Gateway 0 and apply the settings.
9. Set DNS Servers to 169.254.1.2 and APPLY the change; the status should show "DNS applied successfully".
10. Test connectivity (***PIC6 System Configuration→Network Diagnostic***):
    a. Run ping test to modem: Enter 169.254.1.2 into Server Address and select appropriate ethernet port. Then select "Run PING test". If the PIC6 can connect to the modem the PIC6 will display "In Progress" followed by "Pass".
    b. Run ping test to internet: Enter 8.8.8.8 into Serve Address and select appropriate ethernet port. Then select "Run PING test". If the PIC6 can connect to the modem the PIC6 will display "In Progress" followed by "Pass".
    c. Run could test to SmartService cloud. Note that if previous ping test has failed then this test will also fail. In addition verify on the PIC6 Network Diagnostic page that "IOT certificate status: Present" is noted near top of page. If the IOB certificate is not present, then it will have to be loaded. Contact Service Engineering or Technical Service Manager.
11. Verify Time, Date and Time Zone at ***PIC6 System Configuration→Date/Time Configuration***.

Fig. C — User LED and Power LED

Connect to SmartService

Upon successful completion, contact the Command Center at 1-833-257-6280 or email EETSupport@carrier.com. The Command Center will set up the chillers in CarrierSmart or see if they are already onboarded properly.

When contacting the Command Center please have the following information available:

Jobsite Information:

- Street Address, City, State and Zip code
- CCS Office
- CCS Market
- Carrier Job number or Contract number

Chiller data (for each chiller being onboarded):

- Job site Designation (e.g Chiller 1 or alike used to identify the chiller at the job site)
- Model Number
- Full Serial Number
- Eth0 MAC Address

APPENDIX D — A2L REFRIGERANT MAINTENANCE SUPPLEMENT

SAFETY CONSIDERATIONS

Installation and servicing of air-conditioning equipment can be hazardous due to system pressure and electrical components. Only trained and qualified service personnel should install, repair, or service air-conditioning equipment.

Untrained personnel can perform basic maintenance functions of cleaning coils and filters and replacing filters. All other operations should be performed by trained service personnel. When working on air-conditioning equipment, observe precautions in the literature, tags and labels attached to the unit, and other safety precautions that may apply.

Follow all safety codes. Wear safety glasses and work gloves. Use quenching cloth for unbrazing operations. Have fire extinguisher available for all brazing operations.

It is important to recognize safety information. This is the safety-alert symbol ⚠. When you see this symbol on the unit and in instructions or manuals, be alert to the potential for personal injury.

Understand the signal words DANGER, WARNING, CAUTION, and NOTE. These words are used with the safety-alert symbol. DANGER identifies the most serious hazards which **will** result in severe personal injury or death. WARNING signifies hazards which **could** result in personal injury or death. CAUTION is used to identify unsafe practices, which **may** result in minor personal injury or product and property damage. NOTE is used to highlight suggestions which **will** result in enhanced installation, reliability, or operation.

Centrifugal liquid chillers are designed to provide safe and reliable service when operated within design specifications. When operating this equipment, use good judgment and safety precautions to avoid damage to equipment and property or injury to personnel.

INTRODUCTION

This document is to be used in conjunction with the 19MV Start-Up, Operation, and Maintenance Instructions as a supplement. It provides specific information for ASHRAE Standard 34 and ISO 817 Class A2L refrigerants.

The 19MV chillers may contain R-1234ze(E) refrigerant. This refrigerant is classified as A2L, considered mildly flammable and nontoxic.

PURPOSE

This document provides specific guidance for safe maintenance of the 19MV chillers due to this lower flammable refrigerant use for indoor applications isolated from the general public per ANSI/ASHRAE Standard 15 (latest edition) and in compliance with UL 60335-2-40.

R-1234ze(E) CHARACTERISTICS

R-1234ze(E) refrigerant is classified as Class 2L since it meets all four of the following conditions:

1. Exhibits flame propagation when tested at 140°F (60°C) and 14.7 psia (101.3 kPa).
2. Lower Flammability Limit (LFL) is as follows:

   LFL > 0.0062 lbm/ft^3 (0.10 kg/m^3)

   R-1234ze(E) LFL = 0.0189 lbm/ft^3 (0.303 kg/m^3)
3. Heat of combustion is as follows:

   Heat of Combustion < 8169 Btu/lbm (19,000 kJ/kg) at 77°F (25°C) and 14.7 psia (101.3 kPa)

   R-1234ze(E) Heat of Combustion=4.34 Btu/lbm (10.1 kJ/kg)
4. Maximum burning velocity is as follows:

   Maximum burning velocity ≤3.9 in/sec (10 cm/s) when tested at 73.4°F (23.0°C) and 14.7 psia (101.3 kPa) in dry air

   R-1234ze(E) Burning Velocity = 0.47 in/sec (1.2 cm/s)

   R-1234ze(E) Refrigerant Concentration Limit (RCL) = 16,000 ppm

   R-1234ze(E) Occupational Exposure Limit (OEL) = 800 ppm

⚠ WARNING

This manual is intended for use by owner or Carrier authorized service personnel.

Be sure you understand and follow the procedures and safety precautions contained in the chiller instructions as well as those listed in this guide.

⚠ CAUTION

Centrifugal liquid chillers are designed to provide safe and reliable service when operated within design specifications. When operating this equipment, use good judgment and safety precautions to avoid damage to equipment and property or injury to personnel.

⚠ CAUTION

The refrigeration system including piping should be installed in accordance with national and local codes and standards, such as ASHRAE 15 (latest edition), IAPMO Uniform Mechanical Code, ICC International Mechanical Code, or CSA B52, and UL 48416 or UL/CSA 60335-2-40 listings, the manufacturer's instructions, and any markings on the equipment restricting the installation.

TERMINOLOGY

Immediately Dangerous to Life or Health (IDLH)

The maximum concentration from which unprotected persons are able to escape within 30 minutes without escape-impairing symptoms or irreversible health effects.

Refrigerant Concentration Limit (RCL)

The refrigerant concentration limit, in air, determined in accordance with ASHRAE34 standard and intended to reduce the risks of acute toxicity, asphyxiation, and flammability hazards in normally occupied, enclosed spaces.

Occupational Exposure Limit (OEL)

The time-weighted average (TWA) concentration for a normal eight-hour workday and a 40-hour workweek to which nearly all workers can be repeatedly exposed without adverse effect, based on the OSHA PEL, ACGIH TLV-TWA, TERA OARS-WEEL, or consistent value.

Effective Dispersal Volume Charge (EDVC)

The maximum amount of refrigerant charge permitted to disperse in the event of a leak for a volume.

Lower Flammability Limit (LFL)

The minimum concentration of a refrigerant can ignite with air at sea level. The refrigerant/air mixture won't ignite below that.

SAFETY INSTRUCTIONS

⚠ WARNING

Prior to beginning work on systems containing flammable refrigerants, safety checks are necessary to ensure that the risk of ignition is minimized.

The following recommendations should be carefully observed as part of installation, operation, maintenance or service prior to conducting work on the system:

Personal Training

This equipment must be installed and operated by trained and qualified personnel who have received suitable instruction in its use.

When a chiller is used with A2L Flammable Refrigerant, training is required for the working personnel for maintenance, service and repair operations. Training competency should be documented by a certificate from an accredited national training organization or manufacturer.

The training should include the substance of the following:

1. Information about the explosion potential of flammable refrigerants to show that flammables may be dangerous when handled without care.
2. Information about POTENTIAL IGNITION SOURCES, especially those that are not obvious, such as lighters, light switches, or electric heaters.
3. Information about different safety concepts such as:
   a. Unventilated areas
   b. Ventilated enclosures
   c. Ventilated rooms
4. Information about refrigerant detectors:
   a. Principle of function, including influences on the operation.
   b. Procedures to repair, check or replace a refrigerant detector or parts of it in a safe way.
   c. Procedures to disable a refrigerant detector in case of repair work on the refrigerant carrying parts.
5. Information about the concept of sealed components and sealed enclosures according to IEC 60079-15:2010.
6. Information about correct working procedures such as:
   a. Commissioning
   b. Maintenance
   c. Repair
   d. Decommissioning
   e. Disposal

Ventilated Area

Ensure that the area is in the open or that it is adequately ventilated before breaking into the system or conducting any hot work. A degree of ventilation should continue during the period that the work is carried out. The ventilation should safely disperse any released refrigerant and preferably expel it externally into the atmosphere.

Cabling

Check that cabling will not be subject to wear, corrosion, excessive pressure, vibration, sharp edges or any other adverse environmental effects. The check should also take into account the effects of aging or continual vibration from sources such as compressors or fans.

Presence of Fire Extinguisher

If any hot work is to be conducted on the refrigerating equipment or any associated parts, appropriate fire extinguishing equipment should be available to hand. Have a dry powder or CO_2 fire extinguisher adjacent to the charging area.

General Work Area

All maintenance staff and others working in the local area should be instructed on the nature of work being carried out. Work in confined spaces should be avoided.

Work Procedure

Work should be undertaken under a controlled procedure so as to minimize the risk of a flammable gas or vapor being present while the work is being performed.

Checking for Presence of Refrigerant

The area should be checked with an appropriate refrigerant detector prior to and during work, to ensure the technician is aware of potentially toxic or flammable atmospheres. Ensure that the leak detection equipment being used is suitable for use with all applicable refrigerants; i.e., non-sparking, adequately sealed, or intrinsically safe.

For more information about refrigerant detectors, see “Detection of Flammable Refrigerants” in the next section.

No Ignition Sources

No person carrying out work in relation to a refrigerating system which involves exposing any pipe work should use any sources of ignition in such a manner that it may lead to the risk of fire or explosion. All possible ignition sources, including cigarette smoking, should be kept sufficiently far away from the site of installation repair, removal, and disposal, during which refrigerant can possibly be released to the surrounding space. Prior to work taking place, the area around the equipment is to be surveyed to make sure that there are no flammable hazards or ignition risks. “No Smoking” signs should be displayed.

Checks to the Refrigerant Equipment

Where electrical components are being changed, they should be fit for the purpose and to the correct specification. At all times the manufacturer’s maintenance and service guidelines should be followed. If in doubt, consult the manufacturer’s technical department for assistance.

The following checks should be applied to installations using flammable refrigerants:

1. The ventilation machinery and outlets are operating adequately and are not obstructed.
2. If an indirect refrigerating circuit is being used, the secondary circuit should be checked for the presence of refrigerant.
3. Marking to the equipment is visible and legible. Markings and signs that are illegible should be corrected.
4. Refrigerating pipe or components are installed in a position where they are unlikely to be exposed to any substance which may corrode refrigerant containing components, unless the components are constructed of materials which are inherently resistant to being corroded or are suitably protected against being so corroded.

⚠ WARNING

Do not use means to accelerate the defrosting process or to clean, other than those recommended by the manufacturer. The equipment should be stored in a room without continuously operating ignition sources (for example: open flames, an operating gas appliance or an operating electric heater). Do not pierce or burn. Be aware that refrigerants may not contain an odor.

DETECTION OF FLAMMABLE REFRIGERANTS

Under no circumstances should potential sources of ignition be used in searching for or detection of refrigerant leaks. Do not use a halide torch or any other detector using a naked flame.

Each refrigerating machinery room should contain one or more refrigerant detectors with sensing element located in areas where refrigerant from a leak will concentrate, with one or more set points that activate responses alarms automatically to de-energize the following:

a. Refrigerant compressors
b. Refrigerant pumps
c. Normally closed automatic refrigerant valves
d. Other unclassified electrical sources of ignition with apparent power rating greater than 1 kVA, where the apparent power is the product of the circuit voltage and current rating.

Leak detection equipment should be set at a percentage of the LFL of the refrigerant and should be calibrated to the refrigerant employed, and the appropriate percentage of gas (25% maximum) is confirmed.

Detection of refrigerant concentration that exceeds the lower value of below:

0.004725 lbm/ft^3 (0.07575 kg/m^3) for R-1234ze(E)
OR
The upper detection limit of the refrigerant detector

should automatically de-energize the following equipment in the machinery room:

a. Refrigerant compressors
b. Refrigerant pumps
c. Normally closed automatic refrigerant valves
d. Other unclassified electrical sources of ignition with apparent power rating greater than 1 kVA, where the apparent power is the product of the circuit voltage and current rating.

The following leak detection methods are deemed acceptable for all refrigerant systems.

Electronic Leak Detectors

Electronic leak detectors may be used to detect refrigerant leaks capable of detecting each of the specific refrigerant designations in the machinery room.

In the case of flammable refrigerants, the sensitivity may not be adequate, or may need recalibration. (Detection equipment should be calibrated in a refrigerant-free area.) Ensure that the detector is not a potential source of ignition and is suitable for the refrigerant used.

CALIBRATION

Leak detection equipment should be set at a percentage of the LFL of the refrigerant and should be calibrated to the refrigerant employed, and the appropriate percentage of gas (25% maximum) is confirmed.

In the case for R-1234ze(E) below, the detection should be if it exceeds the lower value of:

0.004725 lbm/ft^3 (0.07575 kg/m^3)
OR
The upper detection limit of the refrigerant detector

SET POINT

The refrigerant detectors should activate ventilation at a set point and response time, at an airflow rate not less than the value determined below. There are a couple of set points. One is based on OEL value and the other one is based on RCL value.

OEL Set Point

The refrigerant detector should have a set point not greater than 800 ppm for R-1234ze(E) ONLY IF this value is the lowest OEL value for any refrigerant designation in the machinery room.

For refrigerants that do not have a published OEL value, use a value approved by the Authority Having Jurisdiction (AHJ).

Response time required for this set point is 300 seconds and less. The Alarm Type is “Trouble Alarm”. It should activate Ventilation Level 1 and an “Automatic” reset type is required.

The refrigerant detector should have a set point not greater than the lowest RCL value for any refrigerant designation in the machinery room.

RCL Set Point

For R-1234ze(E), RCL value is 16,000 ppm. This value should be checked against the other refrigerants’ RCL value used in the machinery room and if it is lower than any others then the Set Point should be set to 16,000 ppm.

For refrigerants that do not have a published RCL value, use a value approved by Authority Having Jurisdiction (AHJ).

Response time required for this set point is 15 seconds and less. The Alarm Type is “Emergency Alarm”. It should activate Ventilation Level 2 and an “Manual” reset type is required.

Manual reset type alarms should have the reset located inside the refrigerating machinery room.

Important: Alarms set at levels other than OEL and RCL (such as IDLH) and automatic reset alarms are permitted with the condition that the meaning of each alarm should be clearly marked by signage near the annunciators.

Leak Detection Fluids

Leak detection fluids are suitable for use with most refrigerants but the use of detergents containing chlorine should be avoided as the chlorine may react with the refrigerant and corrode the copper pipework. Examples of leak detection fluids are the bubble method and fluorescent method agents.

Alarm Testing

The refrigerant detector should provide a means for automatic self testing and in the event of failure, a trouble alarm signal should be transmitted to an approved monitored location.

The refrigerant detector should be tested during installation and annually thereafter, or at an interval not exceeding the manufacturer’s installation instructions, whichever is less.

The alarm should have visual and audible annunciation inside the refrigerating machinery room and outside each entrance to the refrigerating machinery room.

The refrigerant detector set points should activate an alarm in accordance with the type of reset.

⚠ WARNING

When a remote located refrigerant sensor is specified by the manufacturer, the instructions should state when it is required and how to install and connect the sensor.

VENTILATION

Ventilation System

Machinery rooms should be vented to the outdoors by a mechanical ventilation system, to prevent accumulation of refrigerant due to leaks or a rupture of a refrigerating system or portion thereof. This mechanical ventilation system should be in accordance with all of the following:

1. Contain at least one power-driven or multi-speed fan.
2. Electric motors driving fans should not be placed inside ducts; fan rotating elements should be nonferrous or nonsparking, or the casing should consist of or be lined with such material.
3. Include provision to supply makeup air to replace that being exhausted; ducts for supply to and exhaust from the machinery room should serve no other area; the makeup air supply

locations should be positioned relative to the exhaust air locations to avoid short circuiting.

⚠ WARNING

Chillers using A2L refrigerants, connected via an air duct system to one or more rooms, the supply and return air should be directly ducted to the space. Open areas such as false ceilings should not be used as a return air duct.

4. The exhaust air inlet ducts should be located in an area where refrigerant from a leak is expected to concentrate, in consideration of the location of the replacement supply air paths, refrigerating machines, and the density of the refrigerant relative to air.

⚠ WARNING

Upon detection of a leak, the zoning dampers are driven fully open and additional mechanical ventilation is activated.

5. The bottom of the exhaust air ducts elevation where air is exhausted from the room should not be more than 4 in. (100 mm) above the floor of the lowest point of the machinery room for R-1234ze(E) refrigerants that are heavier than air.
6. The location where the mechanical ventilation air extracted from the space is discharged should be separated by a sufficient distance, but not less than 9 ft 83 in. (3 m), from the mechanical ventilation air intake openings, to prevent recirculation to the space.
7. The discharge of the exhaust air should be to the outdoors in such a manner as not to cause a nuisance or danger.
8. When multiple refrigerant designations are in the machinery room, evaluate the required airflow according to each refrigerating system, and the highest airflow quantity should apply.

⚠ WARNING

Keep any required ventilation openings clear of obstruction.

IMPORTANT: Servicing should be performed only as recommended by the manufacturer

Ventilation Volumetric Air Flow Rates

Ventilation airflow rates for Levels 1 and 2 are not less than the value determined below.

LEVEL 1 VENTILATION FOR 19MV

Case 1: Operated when occupied, and operated when activated

The greater of

0.5 (ft^3/min per cubic foot) x Machine Room Volume (ft^3) or 20 (ft^3/min per Person) x No of People

0.00254 (m^3/s per cubic meter) x Machine Room Volume (m^3) or 0.00944 (m^3/s per Person) x No of People

Case 2: Operable when occupied

With or without mechanical cooling of the machinery room, the greater of

the airflow rate required to not exceed a temperature rise of 18°F (10°C) above inlet air temperature
OR
the airflow rate required to not exceed a maximum air temperature of 122°F (50°C) in the machinery room

LEVEL 2 VENTILATION FOR 19MV

- 19,000 ft^3/min Ventilation for > 440 lbm of R-1234ze(E) Refrigerant in the Chiller
- 8.6 m^3/s Ventilation for > 190 kg of R-1234ze(E) Refrigerant Charge in the Chiller

⚠ WARNING

Check that the total airflow rate for Level 2 ventilation is not less than Level 1 ventilation airflow rate.

Unventilated Machine Room

The unventilated machine room area should be defined as the room area enclosed by the projection to the floor of the walls, partitions and doors of the space in which the equipment is installed with these specific definitions below:

- Spaces connected by only drop ceilings, ductwork, or similar connections should not be considered a single space.
- Spaces divided by partition walls which are no higher than 6 ft (1.8 m) should be considered a single space.
- Rooms on the same floor and connected by an open passageway between the spaces can be considered a single room if the passageway complies with all of the following.
  - It is a permanent opening.
  - It extends to the floor.
  - It is intended for people to walk through.
- The area of the adjacent rooms, on the same floor, connected by permanent opening in the walls and/or doors between occupied spaces, including gaps between the wall and the floor, can be considered a single room.

Natural Ventilation for Unventilated Machine Room

Connected spaces should be provided with permanent natural ventilation opening(s).

The minimum size of the permanent natural ventilation opening(s) for 19MV with R-1234ze(E) refrigerant should be calculated using the following formula:

A_{vent} = 25.89 x (1550 – m) x Sqrt (A / m) (I-P)
A_{vent} = 0.01173 x (700 – m) x Sqrt (A / m) (SI)
where
A_{vent} = minimum net free area of a permanent opening, ft^2 (m^2)
A = actual area of the individual room, ft^2 (m^2)
m = allowable refrigerant charge of an individual room, lbm (kg)

- The lower edge of the natural ventilation opening between rooms should be located a maximum of 12 in. (305 mm) above the finished floor.
- The area of any openings above 12 in. (305 mm) from the floor should not be considered in determining compliance with A_{vent}.
- At least 50% of the required opening area A_{vent} should be below 8 in. (200 mm) from the floor.
- The bottom of the lowest openings should not be higher than the point of release when the unit is installed and not more than 4 in. (100 mm) from the floor.
- Openings are permanent openings which cannot be closed.
- The height of the openings between the wall and floor which connect the rooms are not less than 0.787 in. (20 mm).
- A second higher opening should be provided. The total size of the second opening should not be less than 50% of minimum opening area for A_{vent} and should be at least 5 ft (1.5 m) above the floor.

IMPORTANT: The requirement for the second opening can be met by drop ceilings, ventilation ducts, or similar arrangements that provide an airflow path between the connected rooms.

IMPORTANT: 19MV Charge is nominal 1550 lbm (700 kg).

MACHINE ROOM GENERAL REQUIREMENTS

When a refrigerating system with A2L refrigerant is located indoors with other mechanical equipment in a machinery room, then the machinery room should be in accordance with the following:

- A machinery room should be dimensioned so that parts are accessible with space for service, maintenance, and operations. There should be clear head room of no less than 7.25 ft (2.2 m) below equipment situated over passageways.
- With the exception of access doors and panels in air ducts and air-handling units, there should be no openings that will permit passage of escaping refrigerant to other parts of the building.
- There should be no airflow to or from an occupied space through a machinery room unless the air is ducted and sealed in such a manner as to prevent any refrigerant leakage from entering the air stream. Access doors and panels in ductwork and air-handling units should be gasketed and tight fitting.
- Access to the refrigerating machinery room should be restricted to authorized personnel. Doors should be clearly marked, or permanent signs should be posted at each entrance to indicate this restriction.
- There should be no flame-producing device or hot surface over 1290°F (700°C) in the room, other than that used for maintenance or repair. However, if there is combustion equipment is installed in the same machinery room with refrigerant-containing equipment, then combustion air is ducted from outside the machinery room and sealed in such a manner as to prevent any refrigerant leakage from entering the combustion chamber. In addition, a refrigerant detector (see "Detection of Flammable Refrigerants" on page 64) is employed to automatically shut down the combustion process in the event of refrigerant leakage.
- Doors communicating with the building should be approved, tight-fitting fire doors, should be self-closing if they open into the building, and should be adequate in number to ensure freedom for persons to escape in an emergency.
- Walls, floor, and ceiling should be tight and of noncombustible construction. Walls, floor, and ceiling separating the refrigerating machinery room from other occupied spaces should be of at least one-hour fire-resistive construction.
- Exterior openings, if present, should not be under any fire escape or any open stairway.
- The machinery room should comply with both ventilation requirements (See "Ventilation" on page 65) and refrigerant detection requirements (see "Detection of Flammable Refrigerants" on page 64), or should be designated as Class I, Division 2 hazardous (classified) electrical location in accordance with the National Electrical Code.
- The mechanical ventilation system should either run continuously with failure of the mechanical ventilation system actuating an alarm, or an alarm will be activated by one or more refrigerant detectors.

Piping

- Keep the installation of pipe-work to a minimum.
- All pipes piercing the interior walls, ceiling, or floor of such rooms should be tightly sealed to the walls, ceiling, or floor through which they pass.
- Pipe-work in the case of flammable refrigerants should not be installed in an unventilated space.
- Flexible pipe elements should be protected against mechanical damage, excessive stress by torsion, or other forces, and they should be checked for mechanical damage annually.
- Precautions should be taken to avoid excessive vibration or pulsation.
- Provision should be made for expansion and contraction of long runs of piping.
- Protection devices, piping, and fittings should be protected as far as possible against adverse environmental effects; for example, the danger of water collecting and freezing in relief pipes or the accumulation of dirt and debris.

Freeze Protection of Water Piping

⚠ WARNING

An automatic air/refrigerant separator and pressure relief valve must be installed as close as possible to the heat exchanger water nozzle and at a high level in the water outlet from the evaporator or the condenser.

- The pressure relief valve should have a flow rating rated to discharge the refrigerant.
- The air/refrigerant separator and pressure relief valve should discharge the refrigerant to the outside or a double wall refrigerant storage.
- The refrigerant leak should be detected by the detection equipment according to "Detection of Flammable Refrigerants" on page 64.
- The ventilation should safely disperse any released refrigerant according to "Ventilation" on page 65.

⚠ WARNING

The use of untreated water can result in corrosion, erosion, sliming, scaling, or algae formation.

IMPORTANT: It is recommended that the service of a reliable water treatment company be used.

EFFECTIVE DISPERSAL VOLUME

The ***effective dispersal volume*** (V_{eff}) is the occupied or unoccupied space served by a refrigeration system in which the leaked refrigerant disperses. It should be used to determine the ***effective dispersal volume charge*** (EDVC) in the system.

The ***maximum charge permitted*** based on RCL for an effective dispersal volume should be calculated as follows:

For R-1234ze(E):

$EDVC = 4.7 \times V_{eff} \times F_{occ}$ (I-P)

$EDVC = 76 \times V_{eff} \times F_{occ} / 1000$ (SI)

where

EDVC = effective dispersal volume charge in lb (kg)

V_{eff} = effective dispersal volume in ft^3 (m^3)

F_{occ} = occupancy adjustment factor (= 0.5 for institutional occupancies; otherwise = 1)

Where a refrigeration system, or a part thereof, is located within an air distribution duct system, or in a space served by an air distribution duct system, the entire air distribution system should be analyzed to determine worst case distribution of leaked refrigerant.

The ***effective dispersal volume*** should be established by the following physical enclosure elements:

- Walls
- Floors
- Ceilings
- Windows or doors which can be closed
- Partitions connecting to and extending from the finished floor to more than 5.5 ft (1.7 m) above the floor.
- The areas that contain only continuous refrigerant piping, or contain only joints and connections which are part of connected spaces on the same floor.
- Air ceiling plenum or floor plenum where plenum space is a part of the refrigeration system air distribution system.
- Supply and return ducts
- Transfer air ductwork
- Two or more spaces connected by a mechanical ventilation system
- Closures in the air distribution system

Where different stories and floor levels connect through an open atrium or mezzanine, the effective dispersal volume is calculated by:

$V_{eff} = A_{floor} \times H_{ceiling}$

Where

Effective dispersal volume V_{eff} (ft^3)

Floor area of the lowest floor level A_{floor} (ft^2)

Ceiling Height $H_{ceiling}$ = 8.2 ft (2.5 m)

Exemptions to the Effective Dispersal Volume

1. If one or more spaces of several arranged in parallel can be closed off from the source of the refrigerant leak, their volumes should not be used in the calculation.
2. Smoke dampers, fire dampers, and combination smoke/fire dampers that close only in an emergency not associated with a refrigerant leak should not be classified as closure devices.
3. Dampers, such as variable-air-volume (VAV) boxes, should not be considered closure devices provided the airflow is not reduced below 10% of its maximum.

REMOVAL AND EVACUATION

When breaking into the refrigerant circuit to make repairs — or for any other purpose — conventional procedures should be used. However, for flammable refrigerants it is important that best practice is followed since flammability is a consideration. The following procedure should be adhered to:

1. Safely remove refrigerant following local and national regulations. The refrigerant charge should be recovered into the correct recovery cylinders.
2. Purge the circuit with inert gas. For equipment containing flammable refrigerants, the system should be purged with oxygen-free nitrogen to render the equipment safe for flammable refrigerants. This process might need to be repeated several times. Compressed air or oxygen should not be used for purging refrigerant systems.
3. Evacuate (optional for A2L).

⚠ CAUTION

Ensure that the outlet for the vacuum pump is not close to any potential ignition sources and that ventilation is available.

4. Purge with inert gas (optional for A2L). For equipment containing flammable refrigerants, refrigerants purging should be achieved by breaking the vacuum in the system with oxygen-free nitrogen and continuing to fill until the working pressure is achieved, then venting to atmosphere, and finally pulling down to a vacuum as in Step 2 (optional for A2L). This process should be repeated until no refrigerant is within the system (optional for A2L). When the final oxygen-free nitrogen charge is used, system should be vented down to atmospheric pressure to enable work to take place.
5. Open the circuit by cutting or brazing.

MAINTENANCE

⚠ CAUTION

Ensure that the mechanical room where the chiller is located with A2L refrigerant is equipped for servicing units with flammable refrigerants.

⚠ CAUTION

Ensure that the the mechanical room where the chiller is located with A2L refrigerant is equipped for sufficient ventilation.

⚠ CAUTION

Be aware that malfunction of the equipment may be caused by refrigerant loss and a refrigerant leak is possible.

IMPORTANT: Safely remove the refrigerant following local and national regulations

⚠ CAUTION

If a leak is suspected, all naked flames should be removed/extinguished. If a leakage of refrigerant is found which requires brazing, all of the refrigerant should be recovered from the system, or isolated (by means of shut off valves) in a part of system remote from the leak. Removal of refrigerant should be according to “Removal and Evacuation” on page 68.

⚠ WARNING

Mechanical connectors used indoors should comply with ISO 14903.

When brazing and/or welding is required, the following procedures should be carried out in the right order:

1. Evacuate the chiller through a vacuum valve.
2. Remove parts to be replaced by cutting or brazing.
3. Purge the braze point with nitrogen during the brazing procedure required for repair.
4. Reassemble sealed enclosures accurately. If seals are worn, replace them.
5. Renew sealing parts when mechanical connectors are reused.
6. Re-fabricate the flare parts when flared joints are reused.
7. Carry out a leak test before charging with refrigerant.
8. Check safety equipment before putting into service.

⚠ WARNING

A part of an appliance that is charged on site, which requires brazing or welding in the installation, should not be shipped with a FLAMMABLE REFRIGERANT CHARGE.

⚠ WARNING

Follow the instructions how to determine the additional REFRIGERANT CHARGE and how to complete the REFRIGERANT CHARGE on the label provided by the manufacturer considering the requirements.

⚠ WARNING

Field-made refrigerant joints indoors should be tightness tested according to the following requirements:

The test method should have a sensitivity of 5 grams (0.01 lbm) per year of refrigerant or better under a pressure of min. 0.32 MPa (46 psig). No leak should be detected.

REPAIRS TO SEALED COMPONENTS

During repairs to sealed components, all electrical supplies should be disconnected from the equipment being worked upon prior to any removal of sealed covers, etc. If it is absolutely necessary to have an electrical supply to equipment during servicing, then a permanently operating form of leak detection should be located at the most critical point to warn of a potentially hazardous situation.

Particular attention should be paid to the following to ensure that by working on electrical components, the casing is not altered in such a way that the level of protection is affected. This should include damage to cables, excessive number of connections, terminals not made to original specification, damage to seals, incorrect fitting of glands, etc.

Ensure that the apparatus is mounted securely.

Ensure that seals or sealing materials have not degraded to the point that they no longer serve the purpose of preventing the ingress of flammable atmospheres. Replacement parts should be in accordance with the manufacturer's specifications.

REPAIR TO INTRINSICALLY SAFE COMPONENTS

Do not apply any permanent inductive or capacitance loads to the circuit without ensuring that this will not exceed the permissible voltage and current permitted for the equipment in use.

Intrinsically safe components are the only types that can be worked on while live in the presence of a flammable atmosphere. The test apparatus should be at the correct rating.

Replace components only with parts specified by the manufacturer. Other parts may result in the ignition of refrigerant in the atmosphere from a leak.

IMPORTANT: The use of silicon sealant can inhibit the effectiveness of some types of leak detection equipment. Intrinsically safe components do not have to be isolated prior to working on them.

COMMISSIONING

⚠ CAUTION

Ensure that the floor area is sufficient for the refrigerant charge or that the ventilation duct is assembled in a correct manner.

⚠ CAUTION

Check safety equipment before putting into service.

IMPORTANT: Connect the pipes and carry out a leak test before charging with refrigerant.

DECOMMISSIONING

If the safety is affected when the equipment is putted out of service, the REFRIGERANT CHARGE should be removed before decommissioning.

Equipment shall be labeled/tagged stating that it has been decommissioned and emptied of refrigerant. The label/tag shall be dated and signed by authorized personnel.

Decommissioning of the equipment to be performed by trained personnel.

Refer to the section on Equipment Decommissioning for more information.

⚠ CAUTION

Ensure sufficient ventilation at the equipment location.

⚠ CAUTION

Be aware that malfunction of the equipment may be caused by refrigerant loss and a refrigerant leak is possible.

- Discharge capacitors in a way that won't cause any spark.
- Remove the refrigerant.

RECOVERY

IMPORTANT: When removing refrigerant from a system, either for servicing or decommissioning, it is recommended good practice that all refrigerants are removed safely.

IMPORTANT: When transferring refrigerant into cylinders, ensure that only appropriate refrigerant recovery cylinders are employed. Ensure that the correct number of cylinders for holding the total system charge is available.

IMPORTANT: All cylinders to be used are designated for the recovered refrigerant and labeled for that refrigerant; i. e., special cylinders for the recovery of refrigerant).

IMPORTANT: Empty recovery cylinders are evacuated and, if possible, cooled before recovery occurs.

⚠ CAUTION

Cylinders must be complete with pressure-relief valve and associated shut-off valves in good working order.

⚠ CAUTION

Recovery equipment must be in good working order with a set of instructions concerning the equipment that is at hand and must be suitable for the recovery of all appropriate refrigerants including, when applicable, flammable refrigerants.

⚠ CAUTION

Do not mix refrigerants in recovery units and especially not in cylinders.

⚠ CAUTION

Before using the recovery machine, check that it is in satisfactory working order, has been properly maintained, and that any associated electrical components are sealed to prevent ignition in the event of a refrigerant release.

Consult manufacturer if in doubt.

In addition:

- A set of calibrated weighing scales should be available and in good working order.
- Hoses should be complete with leak-free disconnect couplings and in good condition.

IMPORTANT: The recovered refrigerant should be returned to the refrigerant supplier in the correct recovery cylinder, and the relevant waste transfer note arranged.

⚠ CAUTION

If compressors or compressor oils are to be removed, ensure that they have been evacuated to an acceptable level to make certain that flammable refrigerant does not remain within the lubricant.

The evacuation process should be carried out prior to returning the compressor to the suppliers. Only electric heating to the compressor body should be employed to accelerate this process.

⚠ CAUTION

When oil is drained from system, it must be carried out safely.

DISPOSAL

⚠ CAUTION

Ensure sufficient ventilation at the working place.

- Remove the refrigerant.
- Evacuate the refrigerant circuit.
- Cut out the compressor and drain the oil.

© 2025 Carrier

INITIAL INSTALLATION START-UP CHECKLIST

FOR 19MV SEMI-HERMETIC TWO-STAGE CENTRIFUGAL LIQUID CHILLER
(REMOVE AND USE FOR JOB FILE.)

NOTE: To avoid injury to personnel and damage to equipment or property when completing the procedures listed in this start-up checklist, use good judgment, follow safe practices, and adhere to the safety considerations/information as outlined in the preceding sections of this Start-Up, Operation, and Maintenance Instructions document.

MACHINE INFORMATION:

NAME _____ SALES ORDER NO. _____
ADDRESS _____ MODEL _____
CITY_____ STATE _____ ZIP _____ S/N _____

DESIGN CONDITIONS:

	TONS (kW)	BRINE	FLOW RATE	TEMPERATURE IN	TEMPERATURE OUT	PRESSURE DROP	PASS	SUCTION TEMPERATURE	CONDENSER TEMPERATURE
EVAPORATOR									******
CONDENSER								******	

CHILLER LINE SIDE:	Volts _____	FLA _____	OLTA _____

REFRIGERANT: Type: _____ Charge _____

CARRIER OBLIGATIONS:		Yes	No
	Disassembled at Job Site		
	Assemble...		
	Leak Test		
	Dehydrate		
	Charging		
	Operating Instructions _____ Hrs.		

START-UP TO BE PERFORMED IN ACCORDANCE WITH APPROPRIATE MACHINE START-UP INSTRUCTIONS
JOB DATA REQUIRED:

Machine Installation Instructions (Y/N) _____
Machine Assembly, Wiring and Piping Diagrams (Y/N) _____
Starting Equipment Details and Wiring Diagrams (Y/N) _____
Applicable Design Data (see above) (Y/N) _____
Diagrams and Instructions for Special Controls (Y/N) _____

INITIAL MACHINE PRESSURE: _____

	Yes	No
Was Machine Tight?		
If Not, Were Leaks Corrected?		
Was Machine Dehydrated After Repairs?		

RECORD ACTUAL PRESSURE DROPS Evaporator _____ Condenser _____

Manufacturer reserves the right to discontinue, or change at any time, specifications or designs without notice and without incurring obligations.

CHARGE REFRIGERANT: Initial Charge _____ Final Charge After Trim _____

INSPECT WIRING AND RECORD ELECTRICAL DATA:

RATINGS:

Motor Voltage _____ Motor RLA _____ Chiller LRA Rating _____

Actual Line Voltages: VFD _____ UPS Battery Charge _____% Battery Charge Level _____%

Verify 6-in. clearance surrounding all VFD enclosure louvers. (Y/N) _____

Record:

L1 to ground _____

L2 to ground _____

L3 to ground _____

L1 to L2 _____

L1 to L3 _____

L2 to L3 _____

NOTE: The % of voltage imbalance should be the same for the two different measurements

Visually inspect top of the electrical enclosures for penetrations and internally for metal particulate: (Y/N) _____

VFD Manufacturer

VFD Serial Number

VFD Nameplate Input Rating

Mfd in

on

VFD Nameplate ID Number

CONTROLS: SAFETY, OPERATING, ETC.

Perform Quick Calibration (Yes/No) _____

Compressor motor and control panel **MUST** be properly and individually connected back to the earth ground in the VFD (in accordance with certified drawings). The transformer supplying power to the unit should be a wye secondary with solidly grounded neutral.	**Yes** ____

WATER/BRINE PUMP CONTROL: Can the Carrier controls independently start the pumps?		**Yes**	**No**
	Condenser Water Pump		
	Chilled Water Pump		
RUN MACHINE:	Do these safeties shut down machine?		
	Condenser Water Flow		
	Chilled Water Flow		
	Pump Interlocks (optional)		

*The water pumps should be interlocked with a dedicated pump or the BAS should be capable of establishing water flow if the refrigerant temperature of either unit is less than 36°F. Equipment failure due to lack of water flow is not covered by the equipment warranty.

INITIAL START:

Does the mechanical room meet ASHRAE 15-2022 minimum requirements? (Y/N) _____

Record any deficiencies in the mechanical room, such as non-operational refrigerant detections system, no ventilation system, etc. _____

Line up all valves in accordance with instruction manual: _____

Start water pumps and establish water flow: _____

Check compressor motor rotation (second stage suction housing sight glass) and record: Counter-clockwise_____

Restart compressor, bring up to speed (operating for at least 2 minutes), and shut down.

Any abnormal coastdown noise? If yes, determine cause: (Y/N) _____

START MACHINE AND OPERATE. COMPLETE THE FOLLOWING:

A: Trim charge and record under Charge Refrigerant section on page CL-1.

B: Take at least two sets of operational log readings and record.

C: Give operating instructions to owner's operating personnel. Given at: _____ Hours

D: Call your Carrier factory representative to report chiller start-up.

E: Return a copy of this checklist to the local Carrier Service office.

SIGNATURES:

CARRIER TECHNICIAN _____

CUSTOMER REPRESENTATIVE _____

DATE _____

DATE _____

CUT ALONG DOTTED LINE

CUT ALONG DOTTED LINE

19MV PIC6 Set Point Table Configuration Sheet

DESCRIPTION	RANGE	UNITS	DEFAULT	value
Cooling LCW Set Point	10 to 120	°F	45	
Base Demand Limit	10.0 to 100.0	%	100.0	

PIC6 TOUCH SCREEN Software Version Number: _____

PIC6 TOUCH SCREEN Controller Identification:

BUS: _____ ADDRESS: _____

19MV PIC6 Time Schedule Configuration Sheet Period 1

	DAY FLAG								OCCUPIED TIME						UNOCCUPIED TIME			
	M	T	W	T	F	S	S	H										
Period 1:																		
Period 2:																		
Period 3:																		
Period 4:																		
Period 5:																		
Period 6:																		
Period 7:																		
Period 8:																		

19MV PIC6 Time Schedule Configuration Sheet Period 2

	DAY FLAG								OCCUPIED TIME						UNOCCUPIED TIME			
	M	T	W	T	F	S	S	H										
Period 1:																		
Period 2:																		
Period 3:																		
Period 4:																		
Period 5:																		
Period 6:																		
Period 7:																		
Period 8:																		

19MV PIC6 Time Schedule Configuration Sheet Period 3

	DAY FLAG								OCCUPIED TIME						UNOCCUPIED TIME			
	M	T	W	T	F	S	S	H										
Period 1:																		
Period 2:																		
Period 3:																		
Period 4:																		
Period 5:																		
Period 6:																		
Period 7:																		
Period 8:																		

19MV PIC6 Factory Table Configuration Sheet

DESCRIPTION	RANGE	UNITS	DEFAULT	VALUE
Chiller Type 4=19MV	0 to 4		4	
Lubrication Type 0= Oil, 2 = Mag Bearing	0 to 2		2	
VFD/Starter Option 5 = Rockwell VFD, 7 = Danfoss VFD	0 to 10		7	
Unit Type Cooler Only=0	0 to 1		0	
Ref Type R-513A=1, R-515B=2 R-1234ze(E)=3	0 to 4		0	
Chilled Medium Type	Water/Brine		Water	
Cond Shell Side MAWP 0=185 psi, 1=300 psi	0 to 1	psig	0	
Country Code	0 to 999		01	
Activate Swift Rst Opt	No/Yes		No	
Activate Freq Start Opt	No/Yes		Yes	

19MV PIC6 MBC Configuration Table Configuration Sheet

DESCRIPTION	RANGE	UNITS	DEFAULT	VALUE
Calibration on Power Up	Disable/Enable		Enable	
Auto Clearance Check	Disable/Enable		Enable	
Clearance Chk on Powerup	Disable/Enable		Enable	
Clearance Fail Criteria	0 to 100	%	7.5	
Auto Levitation	No/Yes		Yes	
Shutdown de-Levi delay	60 to 600	sec	60	
Speed Signal Alarm Delta	0 to 50	%	10	
Speed Signal Alert Delta	0 to 20	%	5	
Shaft Displacement Limit	4 to 10	mils	6	
Speed Sensor Option	Disable/Enable		Enable	

19MV PIC6 Service Parameters Configuration Table Configuration Sheet

DESCRIPTION	RANGE	UNITS	DEFAULT	VALUE
Atmospheric Pressure	8 to 15	psi	14.5	
GV1 Travel Limit	30 to 100	%	93.6	
GV1 Closure at Startup	0 to 4	%	4	
IGV2 Travel Limit	30 to 100	%	93.6	
IGV2 Minimum Degree	0 to 20	Deg.	2.0	
IGV2 Full Load Open Degree	10 to 100	Deg.	88.0	
IGV2 Actuator Max Deg	90 to 120	Deg.	94.0	
IGV2 Position @IGV1 20°	10 to 40	Deg.	37.0	
IGV2 Position @IGV1 30°	10 to 50	Deg.	45.0	
IGV2 Position @IGV1 50°	10 to 80	Deg.	67.0	
Maximum GV Movement	1 to 4	%	2	
Controlled Fluid DB	0.5 to 2	^F	1	
Derivated EWT Gain	1 to 3		2	
Proportional Dec Band	2 to 10		6	
Proportional Inc Band	2 to 10		6.5	
Demand Limit at 20 mA	10 to 100	%	40	
Demand Limit Prop Band	3 to 15	%	10	
Amps or KW Ramp per Min	5 to 20	%	5	
Temp Ramp per Min	1 to 10	^F	3	
Recycle Shutdown Delta T	0.5 to 4	^F	1	
Recycle Restart Delta T	2 to 10	^F	5	
Water Flow Verify Time	0.5 to 5	min	5	
Enable Excessive Starts	No/Yes		No	

CUT ALONG DOTTED LINE

CUT ALONG DOTTED LINE

19MV PIC6 CFGSURGE_SURGE CORRECTION CONFIG Table Configuration Sheet

DESCRIPTION	RANGE	UNITS	DEFAULT	VALUE
Surge Line Configuration PR=0, Delta T=1, PR Table=2	0 to 2		2	
Surge Line PR Offset%	1.5 to 7	%	3	
Surge Line PR Lower DB%	0 to 4.5	%	0	
Surge Line PR Upper DB%	0.2 to 4	%	2	
Surge Delay Time	0 to 120	sec	15	
Surge Time Period	7 to 10	min	8	
Surge Delta Amps %	5 to 40	%	10	
Rampdown Factor	0 to 1		0.1	
GV1 Close Step Surge	1 to 3	%	2	
VFD Speed Step Surge	1 to 5	%	1.5	
EC Valve Step Surge	1 to 10	%	4	
Surge Profile Step	0 to 2	^F	0	
Surge Profile Offset	0 to 5	^F	0	
High Efficiency Mode	Disable/Enable		Enable	
GV Jumpover Option	Disable/Enable		Disable	
DTS Height Recycle Offset	0 to 3	^F	1	

19MV PIC6 CONF_OPT - Option CONFIG Table Configuration Sheet

DESCRIPTION	RANGE	UNITS	DEFAULT	VALUE
Frequent Restart Option	Disable/Enable		Enable	
Common Sensor Option	Disable/Enable		Disable	
EXCSV Selection 0=Disable, 1=Surge, 2=Low Load, 3=Comb	0 to 3		1	
EXCSV Open IGV Position	0.5 to 10	%	5	
EXCSV Close IGV Position	1.5 to 20	%	10	
ESCSV off DT Low Load	0.5 to 10	^F	4	
EXCSV on DT Low Load	0.5 to 10	^F	2	
EXCSV Low Load DB	0.5 to 2	^F	1	
Head Pres Valve Option	Disable/Enable		Disable	
Head Pres Delta P 0%	0 to 85	psi	25	
Head Pres Delta P 100%	0 to 85	psi	50	
Head Pressure Min Output	0 to 100	%	0	
Head Pressure Deadband	0 to 10	psig	1	suggested value is 0
Tower Fan High Setpoint	55 to 105	^F	75	
Refrig Leakage Option	Disable/Enable		Disable	
Refrig Leakage Alarm mA	4 to 20	mA	20	
Customer Alert Option	Disable/Enable		Enable	
Ice Build Option	Disable/Enable		Disable	
Evap Liquid Temp Opt	Disable/Enable		Enable	
Evap App Calc Selection 0=Sat Temp, 1= Ref Temp	0 to 1		1	
Cond Liquid Level Option 0=Gems225, 1=Gems3125, 2=Sporlan	0 to 2		1	

19MV PIC6 CONFOPT2 - Option2 CONFIG Table Configuration Sheet

DESCRIPTION	RANGE	UNITS	DEFAULT	VALUE
IOB3 Option	No/Yes		No	
IOB4 Option	No/Yes		No	
Water Pressure Option 0=No 1=Wtr Flow PD Transducer 2=Wtr Flow PD Meter	0 to 2		0	
Water Flow Measurement 0=No 1= WTR Flow Meter 2=Wtr Flow PD	0 to 2		0	
Water Flow Determination 0=Sat Temp 1=Switch 2=Wtr Flow PD	0 to 2		0	

19MV PIC6 CFGUMVFDUM VFD CONFIGURATION Table Configuration Sheet

DESCRIPTION	RANGE	UNITS	DEFAULT	VALUE
Compressor Speed 100%	47 to 450	Hz	420	
Rated Line Voltage	200 to 13800	Volts	460	
Motor Nameplate Current	10 to 2000	AMPS	200	
Motor Rated Load Current	10 to 2000	AMPS	200	
Motor Nameplate RPM	0 to 15000	rpm	3000	
Motor Rated Torque (NM)	0.1 to 10000	NM	200	
Motor Nameplate KW	0 to 5600	kW	1500	
Increase Ramp Time	5 to 120	sec	30	
Decrease Ramp Time	5 to 60	sec	30	
Switch Frequency (kHz)	0 to 16	kHz	5	
PM Motor Para Download	Disable/Enable		Disable	
Stator Resistance (Rs)	0.0010 to 140	Ohm	0.0010	
d-axis Inductance (Ld)	0 to 1000	Henry	0.010	
q-axis Inductance (Lq)	0 to 1000	Henry	0.010	
Back EMF at 1000 RPM	1 to 9000	V	10	

19MV PIC6 GENCONF - General CONFIG Table Configuration Sheet

DESCRIPTION	RANGE	UNITS	DEFAULT	VALUE
Stop to Start Delay	0 to 15	min	1	
Start to Start Delay	0 to 45	min	1	
Demand Limit Type 0=Base Demand, 1=4 to 20mA	0 to 1		0	
Pulldown Ramp Type 0=Temp, 1=Load	0 to 1		1	
Demand Limit Source 0=Amps, 1=KW	0 to 1		0	
Reboot PIC6	No/Yes		No	

19MV PIC6 CFGGEVFD_GENERAL VFD CONFIG Table Configuration Sheet

DESCRIPTION	RANGE	UNITS	DEFAULT	VALUE
VFD Gain	0.1 to 1.5		0.75	
VFD Max Speed Per	90 to110	%	100	
VFD Min Speed Per	65 to 89	%	70	
VFD Start Speed Per	45 to 100	%	100	
VFD Current Limit	0 to 99999	AMPS	250	

19MV PIC6 RESETCFG - Temperature Reset CONFIG Table Configuration Sheet

DESCRIPTION	RANGE	UNITS	DEFAULT	VALUE
Temp Reset Type 0=No, 1=4 to 20mA, 2=Remote Temp, 3=Water DT	0 to 3		0	
Degrees Reset at 20mA	–30 to 30	^F	10	
Maximum Deg Temp Reset	–30 to 30	^F	10	
Remote Temp Full Reset	–40 to 245	^F	65	
Remote Temp No Reset	–40 to 245	^F	85	
Deg Reset Water DT Full	–30 to 30	^F	10	
Controlled DT Full Reset	0 to 15	^F	0	
Controlled DT No Reset	0 to 15	^F	10	

19MV PIC6 CFG_UPS - UPS CONFIG Table Configuration Sheet

DESCRIPTION	RANGE	UNITS	DEFAULT	VALUE
UPS Option	Disable/Enable		Disable	
Battery Replace Done	No/Yes		Yes	
Battery Threshold	0 to 100	%	70	
Battery Minimum Runtime	0 to 600	sec	240	
Battery Test Duration	0 to 600	sec	240	
Power Failure Max Number	0 to 100	%	50	
Over Temp Duration	0 to 600	sec	60	

CUT ALONG DOTTED LINE

CUT ALONG DOTTED LINE

19MV PIC6 CFGMETER - Config Metering Table Configuration Sheet

DESCRIPTION	RANGE	UNITS	DEFAULT	VALUE
Eco EXV Option	Disable/Enable	NA	Enable	
Cond Liquid Level Determination 0=Capacity Percent, 1=Setpoint	0 to 1		0	
Liquid level SP-Cap 0%		%	0.5	
Liquid level SP-Cap 25%		%	1.0	
Liquid level SP-Cap 50%		%	1.5	
Liquid level SP- Cap 75%		%	2.0	
Liquid level SP- Cap 100%		%	2.1	
Low SST Set Point		°F	34	
Eco EXV Option	Disable/Enable		Enable	
Eco EXV Active Threshold		%	0	
Eco Superheat SP		^F	10	
EXCSV Option	Disable/Enable		Enable	
EXCSV Activate Threshold		%	95	
EXCSV Deactivate Threshold		%	15	
EXCSV Open Time		sec	60	
EXCXV Close Time		sec	120	
EXCSV Open Step			5	
EXCSV Close Step			5	

19MV PIC6 SETPOINT Table Configuration Sheet

DESCRIPTION	RANGE	UNITS	DEFAULT	VALUE
Cooling ECW Setpoint	15 to 120	°F	60	
Cooling LCW Setpoint	–12.2 to 48.9	°F	45	
Base Demand Limit	10.0 to 100.0	%	100.0	
EWT Control Option	Disable/Enable		Disable	

EQUIPMENT DECOMMISSIONING

Before carrying out this procedure, it is essential that the technician is completely familiar with the equipment and all its detail. It is recommended good practice that all refrigerant be recovered safely. Prior to the task being carried out, an oil and refrigerant sample shall be taken in case analysis is required prior to re-use of recovered refrigerant. It is essential that electrical power is available before the task is commenced.

a. Become familiar with the equipment and it's operation.
b. Isolate system electrically.
c. Before attempting the procedure, ensure that:
   - Mechanical handling equipment is available, if required, for handling refrigerant cylinders;
   - All personal protective equipment is available and being used correctly;
   - The recovery process is supervised at all times by a competent person;
   - Recovery equipment and cylinders conform to the appropriate standards.
d. Pump down refrigerant system, if possible.
e. If a vacuum is not possible, make a manifold so that refrigerant can be removed from various parts of the system.
f. Make sure that cylinder is situated on the scales before recovery takes place.
g. Start the recovery machine and operate in accordance with instructions.
h. Do not overfill cylinders (no more than 80 % volume liquid charge).
i. Do not exceed the maximum working pressure of the cylinder, even temporarily.
j. When the cylinders have been filled correctly and the process completed, make sure that the cylinders and the equipment are removed from site promptly and all isolation valves on the equipment are closed off.
k. Recovered refrigerant shall not be charged into another REFRIGERATING SYSTEM unless it has been cleaned and checked.

CUT ALONG DOTTED LINE

CUT ALONG DOTTED LINE

© 2025 Carrier