AquaSnap® 30MPA,MPW015-071 Liquid Chillers with Scroll Compressors and *Comfort*Link Controls

Controls, Start-Up, Operation, Service, and Troubleshooting

CONTENTS

Page

SAFETY CONSIDERATIONS 2,3
GENERAL 3-7
Conventions Used in this Manual 3
Basic Controls Usage 3
CONTROLS 7-40
General 7
Main Base Board (MBB) 7
AUX Board (AUX) 7
Energy Management Module (EMM) 7
Current Sensor Board (CSB) 7
Expansion Valve Board (EXV) 7
Enable/Off/Remote Control Switch 7
Emergency On/Off Switch 7
Board Addresses 7
Control Module Communication 7
Carrier Comfort Network® Interface 7
Sensors 17
- COOLER LEAVING FLUID SENSOR
- COOLER ENTERING FLUID SENSOR
- CONDENSER LEAVING FLUID SENSOR
- CONDENSER ENTERING FLUID SENSOR
- COMPRESSOR RETURN GAS TEMPERATURE SENSOR
- OUTDOOR-AIR TEMPERATURE SENSOR
- DUAL LEAVING WATER TEMPERATURE SENSOR
- DISCHARGE TEMPERATURE THERMISTOR
- SPACE TEMPERATURE SENSOR

Energy Management Module 20
Loss-of-Cooler Flow Protection 20
Condenser Flow Protection 20
Thermostatic Expansion Valves (TXV) 20
Electronic Expansion Valves (EXV) 20
Capacity Control 20
- MINUTES LEFT FOR START
- MINUTES OFF TIME
- CAPACITY CONTROL OVERRIDES

Time, Day, and Date 23
Operation of Machine Based on Control Method . . 24
Cooling Set Point Select 28
Ice Mode 28
Cooler Pump Control 28
Alarm Routing 28
Cooler Pump Sequence of Operation 30
Condenser Pump/Condenser Fan Output Control 30
Configuring and Operating Dual Chiller Control . . 30
Temperature Reset 35
Demand Limit 38
- DEMAND LIMIT (2-Stage Switch Controlled)
- EXTERNALLY POWERED DEMAND LIMIT (4 to 20 mA Controlled)
- DEMAND LIMIT (CCN Loadshed Controlled)

Cooling Set Point (4 to 20 mA) 38

Page

Digital Scroll Option 40
PRE-START-UP 40,41
System Check 40
START-UP AND OPERATION 41-44
Actual Start-Up 42
Check Refrigerant Charge 42
Check Compressor Oil Level 43
Adjust Oil Charge 43
Operating Limitations 44
- TEMPERATURES
- VOLTAGE — ALL UNITS

OPERATION SEQUENCE 44
SERVICE 44-57
Service Test 44
Charging 45
Electronic Components 45
- CONTROL COMPONENTS

Electronic Expansion Valve (EXV) 45
EXV Troubleshooting Procedure 46
Compressor Replacement 48
30MP Cooler and 30MPW Condenser 48
- BRAZED-PLATE COOLER AND CONDENSER HEAT EXCHANGER REPLACEMENT
- BRAZED-PLATE COOLER AND CONDENSER HEAT EXCHANGER CLEANING

Water Treatment 48
Oil Charge 49
Check Refrigerant Feed Components 49
- FILTER DRIER
- MOISTURE-LIQUID INDICATOR
- THERMOSTATIC EXPANSION VALVE (TXV)
- MINIMUM LOAD VALVE
- PRESSURE RELIEF DEVICES

Check Unit Safeties 50
Thermistors 51
Pressure Transducers 51
Chilled Water Flow Switch 51
Strainer 57
Replacing Defective Modules 57
MAINTENANCE 57
Recommended Maintenance Schedule 57
TROUBLESHOOTING 57-78
Complete Unit Stoppage and Restart 57
- GENERAL POWER FAILURE
- UNIT ENABLE-OFF-REMOTE CONTROL SWITCH IS OFF
- CHILLED FLUID PROOF-OF-FLOW SWITCH OPEN
- OPEN 24-V CONTROL CIRCUIT BREAKER(S)
- COOLING LOAD SATISFIED
- THERMISTOR FAILURE
- ENABLING AND DISABLING COMPRESSORS
- COMPRESSOR DISCHARGE CHECK VALVE
- LOW SATURATED SUCTION
- COMPRESSOR SAFETIES

Manufacturer reserves the right to discontinue, or change at any time, specifications or designs without notice and without incurring obligations.

CONTENTS (cont)

Page
Motor Overload Protection 59
- COPELAND COMPRESSOR MODELS WITH ELECTRICAL CODE TF
- COPELAND COMPRESSOR MODELS WITH ELECTRICAL CODE TW OR TE
- BITZER PROTECTION MODULE
- FIELD TROUBLESHOOTING SOLID-STATE MOTOR PROTECTION MODULE

Alarms and Alerts 65
APPENDIX A — LOCAL DISPLAY TABLES 79-87
APPENDIX B — CCN TABLES 88-93
APPENDIX C — BACNET COMMUNICATION OPTION 94-100
APPENDIX D — MAINTENANCE SUMMARY AND LOG SHEETS 101,102
INDEX 103
START-UP CHECKLIST FOR 30MP LIQUID CHILLER . . . . . CL-1 to CL-8

SAFETY CONSIDERATIONS

Installing, starting up, and servicing this equipment can be hazardous due to system pressures, electrical components, and equipment location (elevated structures, mechanical rooms, etc.). Only trained, qualified installers and service mechanics should install, start up, and service this equipment.

When working on this equipment, observe precautions in the literature, and on tags, stickers, and labels attached to the equipment, and any other safety precautions that apply. Follow all safety codes. Wear safety glasses and work gloves. Use care in handling, rigging, and setting this equipment, and in handling all electrical components.

⚠ WARNING

Electrical shock can cause personal injury and death. Shut off all power to this equipment during installation. There may be more than one disconnect switch. Tag all disconnect locations to alert others not to restore power until work is completed.

⚠ WARNING

DO NOT VENT refrigerant relief valves within a building. Outlet from relief valves must be vented outdoors in accordance with the latest edition of ANSI/ASHRAE (American National Standards Institute/American Society of Heating, Refrigerating and Air-Conditioning Engineers) 15 (Safety Code for Mechanical Refrigeration). The accumulation of refrigerant in an enclosed space can displace oxygen and cause asphyxiation. Provide adequate ventilation in enclosed or low overhead areas. Inhalation of high concentrations of vapor is harmful and may cause heart irregularities, unconsciousness or death. Misuse can be fatal. Vapor is heavier than air and reduces the amount of oxygen available for breathing. Product causes eye and skin irritation. Decomposition products are hazardous.

⚠ WARNING

DO NOT USE TORCH to remove any component. System contains oil and refrigerant under pressure.

To remove a component, wear protective gloves and goggles and proceed as follows:

a. Shut off electrical power to unit.
b. Recover refrigerant to relieve all pressure from system using both high-pressure and low pressure ports.
c. Traces of vapor should be displaced with nitrogen and the work area should be well ventilated. Refrigerant in contact with an open flame produces toxic gases.
d. Cut component connection tubing with tubing cutter and remove component from unit. Use a pan to catch any oil that may come out of the lines and as a gage for how much oil to add to the system.
e. Carefully unsweat remaining tubing stubs when necessary. Oil can ignite when exposed to torch flame.

Failure to follow these procedures may result in personal injury or death.

⚠ CAUTION

DO NOT re-use compressor oil or any oil that has been exposed to the atmosphere. Dispose of oil per local codes and regulations. DO NOT leave refrigerant system open to air any longer than the actual time required to service the equipment. Seal circuits being serviced and charge with dry nitrogen to prevent oil contamination when timely repairs cannot be completed. Failure to follow these procedures may result in damage to equipment.

⚠ CAUTION

This unit uses a microprocessor-based electronic control system. Do not use jumpers or other tools to short out components, or to bypass or otherwise depart from recommended procedures. Any short-to-ground of the control board or accompanying wiring may destroy the electronic modules or electrical components.

⚠ CAUTION

To prevent potential damage to heat exchanger, always run fluid through heat exchanger when adding or removing refrigerant charge. Use appropriate brine solutions in cooler fluid loop to prevent the freezing of brazed plate heat exchanger when the equipment is exposed to temperatures below 32 F (0° C). Proof of flow switch is factory installed on all models. Do NOT remove power from this chiller during winter shutdown periods without taking precaution to remove all water from heat exchanger and optional hydronic system. Failure to properly protect the system from freezing may constitute abuse and may result in loss of warranty coverage.

⚠ CAUTION

Compressors require specific rotation. Monitor control alarms during first compressor start-up for reverse rotation protection. Damage to unit may result.

⚠ CAUTION

Refrigerant charge must be removed slowly to prevent loss of compressor oil that could result in compressor failure.

⚠ CAUTION

Puron® refrigerant (R-410A) systems operate at higher pressures than standard R-22 systems. Do not use R-22 service equipment or components on Puron refrigerant equipment. If service equipment is not rated for Puron refrigerant, equipment damage or personal injury may result.

GENERAL

This publication contains Start-Up, Service, Controls, Operation, and Troubleshooting information for the 30MPW water-cooled chillers and the 30MPA air-cooled chillers. For unit sizes, see Table 1. These liquid chillers are equipped with *Comfort*Link controls and conventional thermostatic expansion valves (TXVs, units 30MP015-045) or electronic expansion valves (EXVs, units 30MP050-071). The 30MPA units and the 30MPW units with optional medium temperature brine are also equipped with liquid line solenoid valves (LLSVs).

⚠ CAUTION

This unit uses a microprocessor-based electronic control system. Do not use jumpers or other tools to short out or bypass components or otherwise depart from recommended procedures. Any short-to-ground of the control board or accompanying wiring may destroy the board or electrical component.

Table 1 — Unit Sizes

UNIT MODEL	NOMINAL TONS
30MPA,MPW015	15
30MPA,MPW020	20
30MPA,MPW030	30
30MPA,MPW040	40
30MPA,MPW045	45
30MPA,MPW050	50
30MPA,MPW055	55
30MPA,MPW060	60
30MPA,MPW065	65
30MPA,MPW071	71

Conventions Used in This Manual — The following conventions for discussing configuration points for the local display (scrolling marquee or Navigator™ accessory) will be used in this manual.

Point names will be written with the mode name first, then any sub-modes, then the point name, each separated by an arrow symbol (→). Names will also be shown in bold and italics. As an example, the Minimum Load Valve Select Point, which is located in the Configuration mode, Option 1 sub-mode, would be written as ***Configuration→OPT1→MLV.S***.

This path name will show the user how to navigate through the local display to reach the desired configuration. The user would scroll through the modes and sub-modes using the ▲ and ▼ keys. The arrow symbol in the path name represents pressing ENTER to move into the next level of the menu structure.

When a value is included as part of the path name, it will be shown at the end of the path name after an equals sign. If the value represents a configuration setting, an explanation will be shown in parenthesis after the value. As an example, ***Configuration→OPT1→MLV.S = YES*** (Minimum Load Valve Select).

Pressing the ESCAPE and ENTER keys simultaneously will scroll an expanded text description of the point name or value across the display. The expanded description is shown in the local display tables but will not be shown with the path names in text.

The CCN (Carrier Comfort Network®) point names are also referenced in the local display tables for users configuring the unit with CCN software instead of the local display. The CCN tables are located in Appendix B of the manual.

Basic Control Usage

SCROLLING MARQUEE DISPLAY — This device is the keypad interface used for accessing unit information, reading sensor values, and testing the unit. The scrolling marquee display is a 4-key, 4-character, 16-segment LED (light-emitting diode) display. Eleven mode LEDs are located on the display as well as an Alarm Status LED. See Table 2. For further details, see Appendix A—Local Display Tables on page 79.

The scrolling marquee display module provides the user interface to the *Comfort*Link control system. The display has up and down arrow keys, an ENTER key, and an ESCAPE key. These keys are used to navigate through the different levels of the display structure. See Appendix A—Local Display Tables on page 79. Press the ESCAPE key until the display is blank to move through the top 11 mode levels indicated by LEDs on the left side of the display.

Pressing the ENTER and ESCAPE keys simultaneously will scroll a clear language text description across the display indicating the full meaning of each display acronym. Clear language descriptions will be displayed in the language of choice. Pressing the ENTER and ESCAPE keys when the display is blank (Mode LED level) will return the scrolling marquee display to its default menu of rotating display items, found under ***Run Status→VIEW***. In addition, the password will be disabled, requiring that it be entered again before changes can be made to password protected items. After a period of time with no key activity, the scrolling marquee will display its default menu of rotating display items found under ***Run Status→VIEW***.

When a specific item is located, the display will flash showing the operator, the item, the item value and then the item units (if any). Press the ENTER key to stop the display at the item value. Press the ENTER key again so that the item value flashes. Use the arrow keys to change the value or state of an item and press the ENTER key to accept it. Press the ESCAPE key and the item, value, or units display will resume. Repeat the process as required for other items.

NOTE: If a value has been forced, the lower right "." will be flashing.

See Table 3 and Appendix A for further details.

Table 2 — Scrolling Marquee Display Menu Structure*

MODE	RUN STATUS	SERVICE TEST	TEMPERATURES	PRESSURES	SET POINTS	INPUTS	OUTPUTS	CONFIGURATION	TIME CLOCK	OPERATING MODES	ALARMS
SUB-MODE	Auto View of Run Status (VIEW)	Service Test Mode (TEST)	Unit Temperatures (UNIT)	Pressures Circuit A (PRC.A)	Cooling Setpoints (COOL)	General Inputs (GEN.I)	General Outputs (GEN.O)	Display Configuration (DISP)	Time of Day (TIME)	Modes (MODE)	Current (CRNT)
	Unit Run Hour and Start (RUN)	Outputs and Pumps (OUTS)	Temperatures Circuit A (CIR.A)		Head Pressure Setpoint (HEAD)	Circuit Inputs (CRCT)	Outputs Circuit A (CIR.A)	Unit Configuration (UNIT)	Month, Date, Day, and Year (DATE)		Reset Alarms (RCRN)
	Circuit and Compressor Run Hours (HOUR)	Circuit A Comp Test (CMPA)			Brine Freeze Setpoint (FRZ)	4-20mA Inputs (4-20)	Outputs Circuit A EXV (A.EXV)	Unit Options 1 Hardware (OPT1)	Daylight Savings Time (DST)		Alarm History (HIST)
	Compressor Starts (STRT)							Unit Options 2 Controls (OPT2)	Local Holiday Schedules (HOL.L)		
	Preventive Maintenance (PM)							Circuit A EXV Configuration (EXV.A)	Schedule Number (SCH.N)		
	Software Version (VERS)							CCN Network Configuration (CCN)	Local Occu-pancy Schedule (SCH.L)		
								Reset Cool Temp (RSET)	Schedule Override (OVR)		
								Set Point and Ramp Load (SLCT)			
								Service Configuration (SERV)			
								Broadcast Configuration (BCST)			

*Throughout this text, the location of items in the menu structure will be described in the following format:

Item Expansion (Mode Name→Sub-mode Name→ITEM)

For example, using the language selection item:

Language Selection (***Configuration→DISP→LANG***)

Table 3 — Operating Modes

MODE NO.	ITEM EXPANSION	DESCRIPTION
01	CSM CONTROLLING CHILLER	Chillervisor System Manager (CSM) is controlling the chiller.
02	WSM CONTROLLING CHILLER	Water System Manager (WSM) is controlling the chiller.
03	MASTER/SLAVE CONTROL	Dual Chiller control is enabled.
05	RAMP LOAD LIMITED	Ramp load (pull-down) limiting in effect. In this mode, the rate at which leaving fluid temperature is dropped is limited to a predetermined value to prevent compressor overloading. See Cooling Ramp Loading (***Configuration→SLCT→CRMP***). The pull-down limit can be modified, if desired, to any rate from 0.2° F to 2° F (0.1° to 1° C)/minute.
06	TIMED OVERRIDE IN EFFECT	Timed override is in effect. This is a 1 to 4 hour temporary override of the programmed schedule, forcing unit to Occupied mode. Override can be implemented with unit under Local (Enable) or CCN (Carrier Comfort Network®) control. Override expires after each use.
07	LOW COOLER SUCTION TEMPA	Circuit A cooler Freeze Protection mode. At least one compressor must be on, and the Saturated Suction Temperature is not increasing greater than 1.1° F (0.6° C) in 10 seconds. If the saturated suction temperature is less than the Brine Freeze Point (***Set Points→FRZ →BR.FZ***) minus 6° F (3.4° C) and less than the leaving fluid temperature minus 14° F (7.8° C) for 2 minutes, a stage of capacity will be removed from the circuit. Or, If the saturated suction temperature is less than the Brine Freeze Point minus 14° F (7.8° C), for 90 seconds, a stage of capacity will be removed from the circuit. The control will continue to decrease capacity as long as either condition exists.
09	SLOW CHANGE OVERRIDE	Slow change override is in effect. The leaving fluid temperature is close to and moving towards the control point.
10	MINIMUM OFF TIME ACTIVE	Chiller is being held off by Minutes Off Time (***Configuration→OPT2→DELY***).
13	DUAL SETPOINT	Dual Set Point mode is in effect. Chiller controls to Cooling Set Point 1 (***Set Points→COOL →CSP.1***) during occupied periods and Cooling Set Point 2 (***Set Points→COOL→CSP.2***) during unoccupied periods.
14	TEMPERATURE RESET	Temperature reset is in effect. In this mode, chiller is using temperature reset to adjust leaving fluid set point upward and is currently controlling to the modified set point. The set point can be modified based on return fluid, outdoor-air-temperature, space temperature, or 4 to 20 mA signal.
15	DEMAND LIMITED	Demand limit is in effect. This indicates that the capacity of the chiller is being limited by demand limit control option. Because of this limitation, the chiller may not be able to produce the desired leaving fluid temperature. Demand limit can be controlled by switch inputs or a 4 to 20 mA signal.
16	COOLER FREEZE PROTECTION	Cooler fluid temperatures are approaching the Freeze point (see Alarms and Alerts section for definition). The chiller will be shut down when either fluid temperature falls below the Freeze point.
17	LOW TEMPERATURE COOLING	Chiller is in Cooling mode and the rate of change of the leaving fluid is negative and decreasing faster than -0.5° F (-0.3° C) per minute. Error between leaving fluid and control point exceeds fixed amount. Control will automatically unload the chiller if necessary.
18	HIGH TEMPERATURE COOLING	Chiller is in Cooling mode and the rate of change of the leaving fluid is positive and increasing. Error between leaving fluid and control point exceeds fixed amount. Control will automatically load the chiller if necessary to better match the increasing load.
19	MAKING ICE	Chiller is in an unoccupied mode and is using Cooling Set Point 3 (***Set Points→COOL →CSP.3***) to make ice. The ice done input to the Energy Management Module (EMM) is open.
20	STORING ICE	Chiller is in an unoccupied mode and is controlling to Cooling Set Point 2 (***Set Points →COOL →CSP.2***). The ice done input to the Energy Management Module (EMM) is closed.
21	HIGH SCT CIRCUIT A	Chiller is in a Cooling mode and the Saturated Condensing Temperature (SCT) is greater than the calculated maximum limit. No additional stages of capacity will be added. Chiller capacity may be reduced if SCT continues to rise to avoid high-pressure switch trips by reducing condensing temperature.
23	MINIMUM COMP ON TIME	Cooling load may be satisfied, however control continues to operate compressor to ensure proper oil return. May be an indication of oversized application, low fluid flow rate or low loop volume.
24	PUMP OFF DELAY TIME	Cooling load is satisfied, however cooler pump continues to run for the number of minutes set by the configuration variable Cooler Pump Shutdown Delay (***Configuration→OPT1 →PM.DY***).

LEGEND

CSM — Chillervisor System Manager
SCT — Saturated Condensing Temperature
WSM — Water System Manager

ACCESSORY NAVIGATOR™ DISPLAY MODULE — The Navigator module provides a mobile user interface to the *Comfort*Link control system. The display has up and down arrow keys, an ENTER key, and an ESCAPE key. These keys are used to navigate through the different levels of the display structure. Press the ESCAPE key until 'Select a Menu Item' is displayed to move through the top 11 mode levels indicated by LEDs on the left side of the display. See Fig. 1.

Once within a Mode or sub-mode, a ">" indicates the currently selected item on the display screen. Pressing the ENTER and ESCAPE keys simultaneously will put the Navigator module into expanded text mode where the full meaning of all sub-modes, items and their values can be displayed. Pressing the ENTER and ESCAPE keys when the display says 'Select Menu Item' (Mode LED level) will return the Navigator module to its default menu of rotating display items (those items in ***Run Status→VIEW***). In addition, the password will be disabled, requiring that it be entered again before changes can be made to password protected items. Press the ESCAPE key to exit out of the expanded text mode.

NOTE: When the Language Selection (***Configuration→DISP→LANG***), variable is changed, all appropriate display expansions will immediately change to the new language. No power-off or control reset is required when reconfiguring languages.

When a specific item is located, the item name appears on the left of the display, the value will appear near the middle of the display and the units (if any) will appear on the far right of the display. Press the ENTER key at a changeable item and the value will begin to flash. Use the up and down arrow keys to change the value, and confirm the value by pressing the ENTER key.

Changing item values or testing outputs is accomplished in the same manner. Locate and display the desired item. Press ENTER so that the item value flashes. Use the arrow keys to change the value or state and press the ENTER key to accept it. Press the ESCAPE key to return to the next higher level of structure. Repeat the process as required for other items.

Items in the Configuration and Service Test modes are password protected. The words **Enter Password** will be displayed when required, with 1111 also being displayed. The default password is 1111. Use the arrow keys to change the number and press ENTER to enter the digit. Continue with the remaining digits of the password. The password can only be changed through CCN operator interface software such as ComfortWORKS, ComfortVIEW and Service Tool.

Adjusting the Contrast — The contrast of the display can be adjusted to suit ambient conditions. To adjust the contrast of the Navigator module, press the ESCAPE key until the display reads, "Select a menu item." Using the arrow keys move to the Configuration mode. Press ENTER to obtain access to this mode. The display will read:

>	TEST	OFF
	METR	OFF
	LANG	ENGLISH
	PAS.E	ENBL

Pressing ENTER will cause the "OFF" to flash. Use the up or down arrow to change "OFF" to "ON". Pressing ENTER will illuminate all LEDs and display all pixels in the view screen. Pressing ENTER and ESCAPE simultaneously allows the user to adjust the display contrast. Use the up or down arrows to adjust the contrast. The screen's contrast will change with the adjustment. Press ENTER to accept the change. The Navigator module will keep this setting as long as it is plugged in to the LEN bus.

Adjusting the Backlight Brightness — The backlight of the display can be adjusted to suit ambient conditions. The factory default is set to the highest level. To adjust the backlight of the Navigator module, press the ESCAPE key until the display reads, "Select a menu item." Using the arrow keys move to the Configuration mode. Press ENTER to obtain access to this mode. The display will read:

>	TEST	OFF
	METR	OFF
	LANG	ENGLISH
	PAS.E	ENBL

Pressing ENTER will cause the "OFF" to flash. Use the up or down arrow keys to change "OFF" to "ON." Pressing ENTER will illuminate all LEDs and display all pixels in the view screen. Pressing the up and down arrow keys simultaneously allows the user to adjust the display brightness. Use the up or down arrow keys to adjust screen brightness. Press ENTER to accept the change. The Navigator module will keep this setting as long as it is plugged in to the LEN bus.

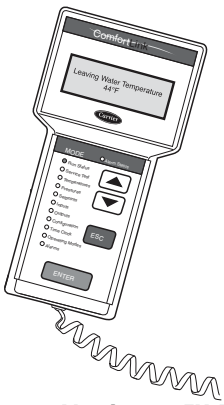

Fig. 1 — Accessory Navigator™ Display Module

CHANGING THE DISPLAY LANGUAGE — The factory default language is English. Several other languages are available, including Spanish, French, and Portugese.

Required Configurations — Table 4 shows the required configurations for Language Selection.

Table 4 — LANG (Language Selection) Required Configurations

SUB-MODE	ITEM	DISPLAY	ITEM DESCRIPTION	COMMENT
DISP	LANG	X	Language Selection	Default: 0 Range: 0 to 3 0=English 1=Espanol 2=Francais 3=Portugese

NOTE: When the Language Selection (***Configuration→DISP→LANG***) variable is changed, all appropriate display expansions will immediately change to the new language. No power-off or control reset is required when reconfiguring Language Selection.

CHANGING THE UNITS OF MEASURE — The factory default unit of measure is English (for example, °F, ^F, psi). The display can be changed to metric units (for example, °C, ^C, kPa).

Required Configurations — Table 5 shows the required configurations for Metric Display.

Table 5 — METR (Metric Display) Required Configurations

SUB-MODE	ITEM	DISPLAY	ITEM DESCRIPTION	COMMENT
DISP	METR	OFF/ON	Metric Display	Default: OFF OFF=English ON=Metric

NOTE: When the Metric Display (***Configuration→DISP→METR***) variable is changed, all appropriate display expansions will immediately change to the new units of measure. No power-off or control reset is required when reconfiguring Metric Display.

CONFIGURATION AND SERVICE PASSWORD — Items in the Configuration and Service Test modes are password protected. The words PASS and WORD will flash on the scrolling marquee. Press ENTER for the digits 1111 to be displayed. On the Navigator, press **Enter Password** and 1111 will be displayed. The default password is 1111. Use the arrow keys to change each number if required and press ENTER to accept the digit. Continue with the remaining digits of the password.

Changing Service Password — The password can only be changed through CCN operator interface software such as ComfortWORKS™, ComfortVIEW™, and Service Tool. Caution should be exercised when changing the password. Once changed, the only way to determine the password is through one of these devices. To view or change the password, use the CCN Variable PASSWORD found in Service Configuration/Display.

CONTROLS

General — The 30MP liquid scroll chillers contain the *Comfort*Link electronic control system that controls and monitors all operations of the chiller.

The control system is composed of several components as listed in the sections below. See Fig. 2 for a typical control box drawing. See Fig. 3-6 for power and control schematics. See Table 6 for drawing designation.

Main Base Board (MBB) — See Fig. 7. The MBB is the heart of the *Comfort*Link control system. It contains the major portion of operating software and controls the operation of the machine. The MBB continuously monitors input/output channel information received from its inputs and from all other modules. The MBB receives inputs from the discharge and suction pressure transducers and thermistors. See Table 7. The MBB also receives the feedback inputs from each compressor current sensor board and other status switches. See Table 8. The MBB also controls several outputs. Relay outputs controlled by the MBB are shown in Table 9. Information is transmitted between modules via a 3-wire communication bus or LEN (Local Equipment Network). The CCN (Carrier Comfort Network) bus is also supported. Connections to both LEN and CCN buses are made at the LVT (low voltage terminal).

The Instance Jumper must be on "1."

AUX Board (AUX) — The AUX board is used with the digital scroll option (020-045 only). It provides additional inputs and outputs for digital scroll control. See Fig. 8.

Energy Management Module (EMM) — The EMM module is available as a factory-installed option or as a field-installed accessory. The EMM module receives 4 to 20 mA inputs for the leaving fluid temperature reset, cooling set point and demand limit functions. The EMM module also receives the switch inputs for the field-installed 2-stage demand limit and ice done functions. The EMM module communicates the status of all inputs with the MBB, and the MBB adjusts the control point, capacity limit, and other functions according to the inputs received.

Current Sensor Board (CSB) — The CSB is used to monitor the status of the compressors by measuring current and providing an analog input to the main base board (MBB).

Expansion Valve Board (EXV) (050-071 only) — The EXV board communicates with the MBB and directly controls the expansion valves to maintain the correct compressor superheat.

Enable/Off/Remote Control Switch — The Enable/Off/Remote Control switch is a 3-position switch used to control the chiller. When switched to the Enable position the chiller is under its own control. Move the switch to the Off position to shut the chiller down. Move the switch to the Remote Control position and a field-installed dry contact can be used to start the chiller. The contacts must be capable of handling a 24 vac, 50-mA load. In the Enable and Remote Control (dry contacts closed) positions, the chiller is allowed to operate and respond to the scheduling configuration, CCN configuration and set point data. See Fig. 9.

Emergency On/Off Switch — The Emergency On/Off switch should only be used when it is required to shut the chiller off immediately. Power to the MBB, EMM, EXV, AUX, and marquee display is interrupted when this switch is off and all outputs from these modules will be turned off. See Fig. 9.

Board Addresses — The main base board (MBB) has a 3-position instance jumper that must be set to 1. The EMM and EXV board has 4-position DIP switches. All switches are set to ON for all boards except the AUX board. The AUX board DIP switch settings are shown on the wiring schematic.

Control Module Communication

RED LED — Proper operation of the control boards can be visually checked by looking at the red status LEDs. During initial power-up the LED will signal a $^1/_2$-second blink 3 times, followed by a pause. This indicates that the processor is booting. If this pattern repeats, it is an indication that the control board is in a continuous reboot loop and the board should be replaced. When operating correctly, the red status LEDs should be blinking in unison at a rate of once every 2 seconds. If the red LEDs are not blinking in unison, verify that correct power is being supplied to all modules. Be sure that the main control is supplied with the current software. If necessary, reload current software. If the problem still persists, replace the control board. A red LED that is lit continuously or blinking at a rate of once per second or faster indicates that the control board should be replaced.

GREEN LED — The MBB has one green LED. The Local Equipment Network (LEN) LED should always be blinking whenever power is on. All other boards have a LEN LED which should be blinking whenever power is on. Check LEN connections for potential communication errors at the board J3 and/or J4 connectors. Communication between modules is accomplished by a 3-wire sensor bus. These 3 wires run in parallel from module to module. The J4 connector on the MBB provides both power and communication directly to the marquee display only.

YELLOW LED — The MBB has one yellow LED. The Carrier Comfort Network (CCN) LED will blink during times of network communication.

Carrier Comfort Network® (CCN) Interface — The 30MP chiller units can be connected to the CCN if desired. The communication bus wiring is a shielded, 3-conductor cable with drain wire and is supplied and installed in the field. See Table 10. The system elements are connected

to the communication bus in a daisy chain arrangement. The positive pin of each system element communication connector must be wired to the positive pins of the system elements on either side of it. This is also required for the negative and signal ground pins of each system element. Wiring connections for CCN should be made at LVT See Fig. 10 and consult the CCN Contractor's Manual for further information.

NOTE: Conductors and drain wire must be 20 AWG (American Wire Gage) minimum stranded, tinned copper. Individual conductors must be insulated with PVC, PVC/nylon, vinyl, Teflon*, or polyethylene. An aluminum/polyester 100% foil shield and an outer jacket of PVC, PVC/nylon, chrome vinyl, or Teflon with a minimum operating temperature range of –20 C to 60 C is required. Wire manufactured by Alpha (2413 or 5463), American (A22503), Belden (8772), or Columbia (02525) meets the above mentioned requirements.

It is important when connecting to a CCN communication bus that a color coding scheme be used for the entire network to simplify the installation. It is recommended that red be used for the signal positive, black for the signal negative, and white for the signal ground. Use a similar scheme for cables containing different colored wires.

At each system element, the shields of its communication bus cables must be tied together. If the communication bus is entirely within one building, the resulting continuous shield must be connected to a ground at one point only. If the communication bus cable exits from one building and enters another, the shields must be connected to grounds at the lightning suppressor in each building where the cable enters or exits the building (one point per building only). To connect the unit to the network:

1. Turn off power to the control box.
2. Cut the CCN wire and strip the ends of the red (+), white (ground), and black (–) conductors. (Substitute appropriate colors for different colored cables.)
3. Connect the red wire to (+) terminal on LVT of the plug, the white wire to COM terminal, and the black wire to the (–) terminal.
4. The RJ14 CCN connector on LVT can also be used, but is only intended for temporary connection (for example, a laptop computer running Service Tool).

LEGEND FOR FIG. 3-5

ALMR — Alarm Relay
AUX — Auxilliary
C — Contactor, Compressor
CB — Circuit Breaker
CCB — Compressor Circuit Breaker
CCH — Crankcase Heater Relay
CNFS — Condenser Water Flow Switch
CNPI — Condenser Pump Interlock
COMP — Compressor
CR — Control Relay
CSB — Current Sensing Board
CWFS — Chilled Water Flow Switch
DGS — Digital Scroll Compressor
DPT — Discharge Pressure Transducer
DTT — Discharge Temperature Thermistor
DUS — Digital Unloader Solenoid
EMM — Energy Management
EXV — Expansion Valve Board/Electronic Expansion Valve
FB — Fuse Block
FIOP — Factory-Installed Option
FU — Fuse
GND — Ground
HPS — High-Pressure Switch
LLSV — Liquid Line Solenoid Valve
LON — Local Operating Network
LVT — Low Voltage Terminal
LWT — Leaving Water Temperature
MBB — Main Base Board
MLV — Minimum Load Valve
MP — Modular Motor Protection
MTT — Motor Temperature Thermistor
NEC — National Electrical Code
OAT — Outdoor-Air Thermistor
OPT — Option
PL — Plug
RGT — Return Gas Temperature
SPT — Suction Pressure Transducer
SW — Switch
TB — Terminal Block
TRAN — Transformer
UPC — Unitary Protocol Converter

X — Terminal Block
Terminal (Unmarked)
X — Terminal (Marked)
Splice
Factory Wiring
Field Wiring
Accessory or Option Wiring
To indicate common potential only; not to represent wiring.

* Registered trademark of DuPont.

Table 6 — Component, Power, and Control Drawings

30MPA,MPW UNIT	DESCRIPTION	LOCATION
015	Component Arrangement	Fig. 2, page 10
	Power Wiring Schematic	Fig. 3, page 11
	Control Wiring Schematic	Fig. 5, page 13
020	Component Arrangement	Fig. 2, page 10
	Power Wiring Schematic	Fig. 3, page 11
	Control Wiring Schematic	Fig. 5, page 13
030	Component Arrangement	Fig. 2, page 10
	Power Wiring Schematic	Fig. 3, page 11
	Control Wiring Schematic	Fig. 5, page 13
040	Component Arrangement	Fig. 2, page 10
	Power Wiring Schematic	Fig. 3, page 11
	Control Wiring Schematic	Fig. 5, page 13
045	Component Arrangement	Fig. 2, page 10
	Power Wiring Schematic	Fig. 3, page 11
	Control Wiring Schematic	Fig. 5, page 13
050	Component Arrangement	Fig. 2, page 10
	Power Wiring Schematic	Fig. 4, page 12
	Control Wiring Schematic	Fig. 6, page 14
055	Component Arrangement	Fig. 2, page 10
	Power Wiring Schematic	Fig. 4, page 12
	Control Wiring Schematic	Fig. 6, page 14
060	Component Arrangement	Fig. 2, page 10
	Power Wiring Schematic	Fig. 4, page 12
	Control Wiring Schematic	Fig. 6, page 14
065	Component Arrangement	Fig. 2, page 10
	Power Wiring Schematic	Fig. 4, page 12
	Control Wiring Schematic	Fig. 6, page 14
071	Component Arrangement	Fig. 2, page 10
	Power Wiring Schematic	Fig. 4, page 12
	Control Wiring Schematic	Fig. 6, page 14

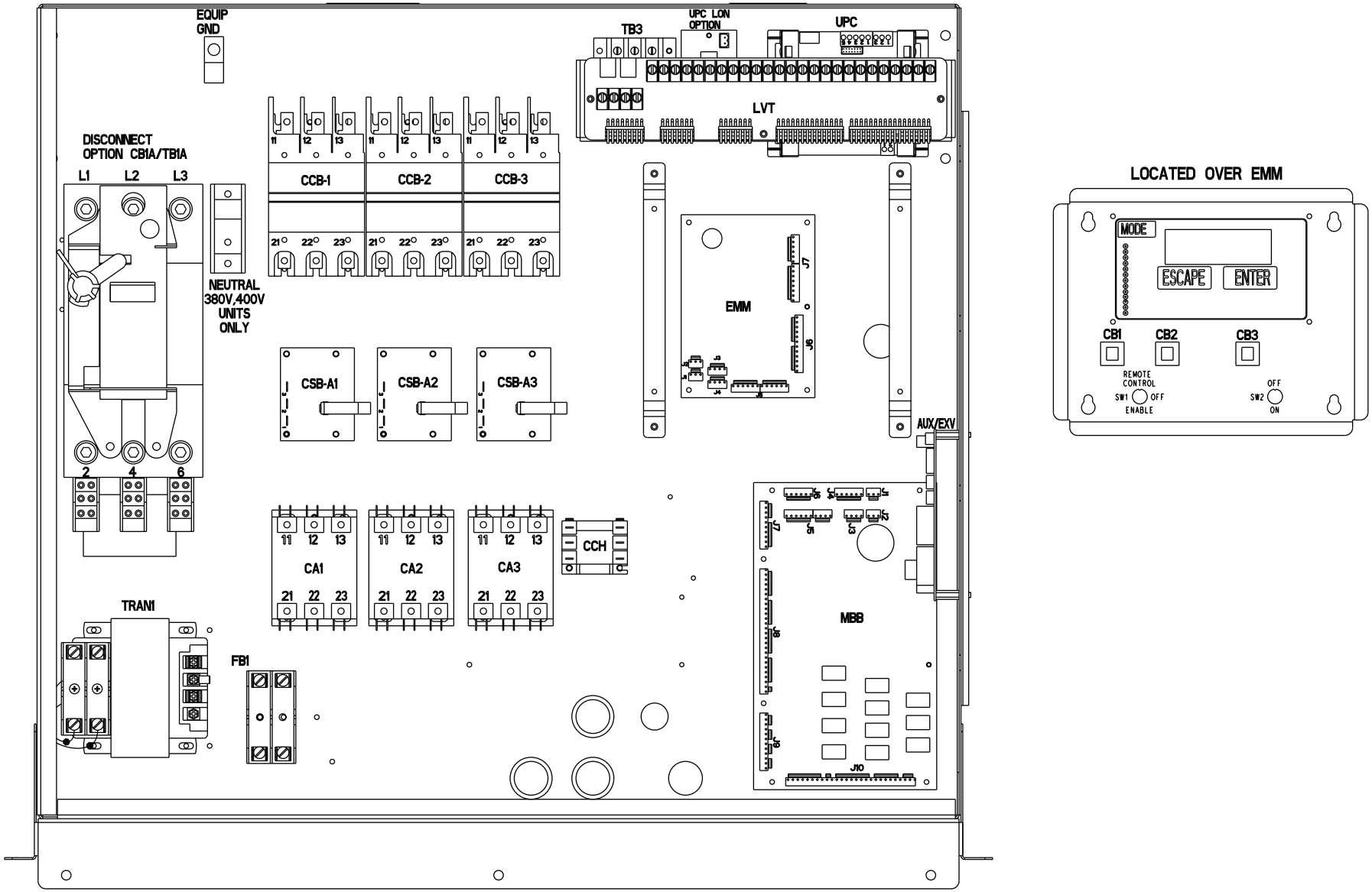

Fig. 2 — Typical Control Box — 30MP015-071 Units

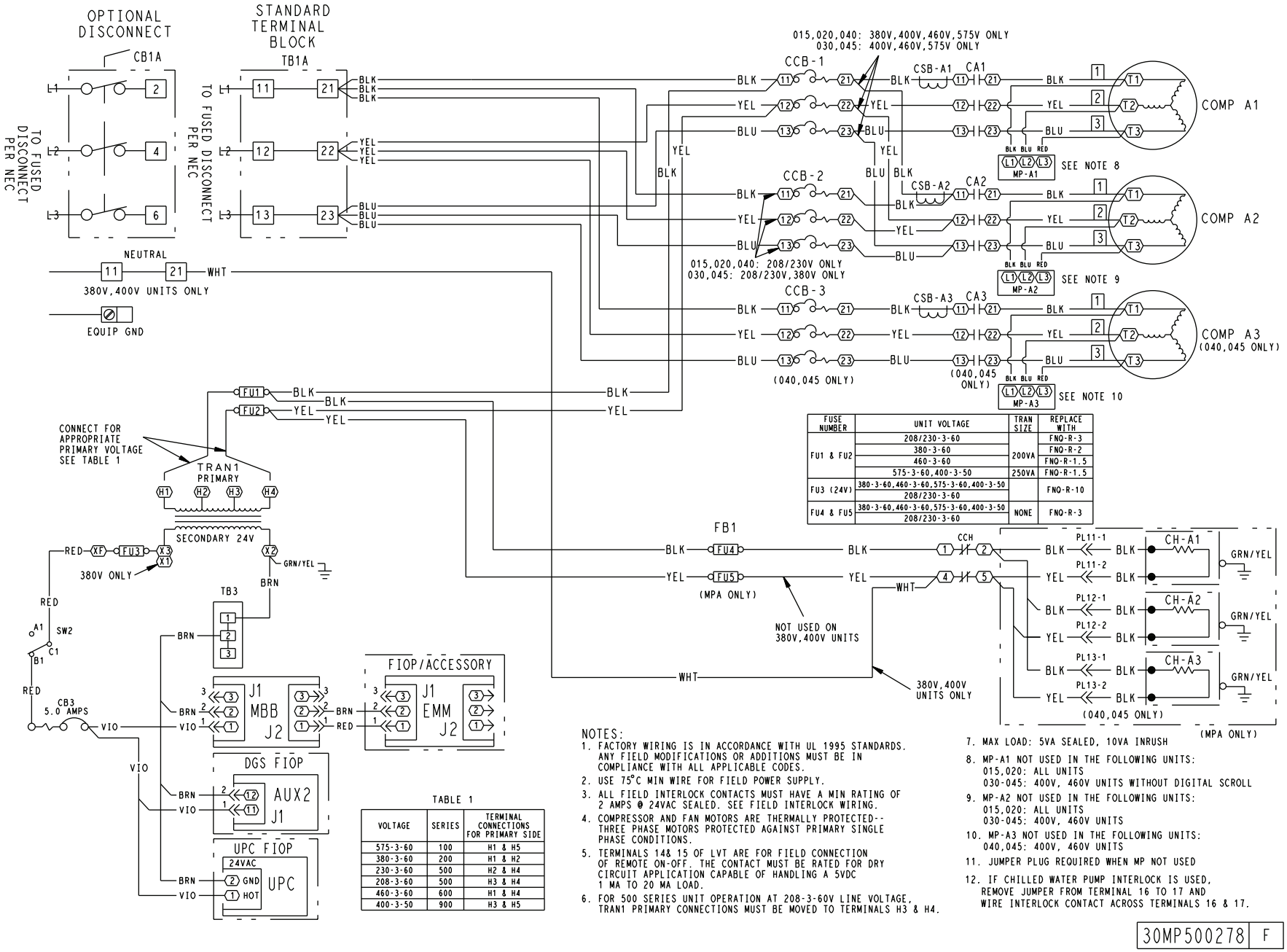

FUSE NUMBER	UNIT VOLTAGE	TRAN SIZE	REPLACE WITH
FU1 & FU2	208/230-3-60	200VA	FNQ-R-3
	380-3-60		FNQ-R-2
	460-3-60		FNQ-R-1.5
	575-3-60,400-3-50	250VA	FNQ-R-1.5
FU3 (24V)	380-3-60,460-3-60,575-3-60,400-3-50		FNQ-R-10
	208/230-3-60		
FU4 & FU5	380-3-60,460-3-60,575-3-60,400-3-50	NONE	FNQ-R-3
	208/230-3-60		

TABLE 1

VOLTAGE	SERIES	TERMINAL CONNECTIONS FOR PRIMARY SIDE
575-3-60	100	H1 & H5
380-3-60	200	H1 & H2
230-3-60	500	H2 & H4
208-3-60	500	H3 & H4
460-3-60	600	H1 & H4
400-3-50	900	H3 & H5

NOTES:

1. FACTORY WIRING IS IN ACCORDANCE WITH UL 1995 STANDARDS. ANY FIELD MODIFICATIONS OR ADDITIONS MUST BE IN COMPLIANCE WITH ALL APPLICABLE CODES.
2. USE 75°C MIN WIRE FOR FIELD POWER SUPPLY.
3. ALL FIELD INTERLOCK CONTACTS MUST HAVE A MIN RATING OF 2 AMPS @ 24VAC SEALED. SEE FIELD INTERLOCK WIRING.
4. COMPRESSOR AND FAN MOTORS ARE THERMALLY PROTECTED-- THREE PHASE MOTORS PROTECTED AGAINST PRIMARY SINGLE PHASE CONDITIONS.
5. TERMINALS 14& 15 OF LVT ARE FOR FIELD CONNECTION OF REMOTE ON-OFF. THE CONTACT MUST BE RATED FOR DRY CIRCUIT APPLICATION CAPABLE OF HANDLING A 5VDC 1 MA TO 20 MA LOAD.
6. FOR 500 SERIES UNIT OPERATION AT 208-3-60V LINE VOLTAGE, TRAN1 PRIMARY CONNECTIONS MUST BE MOVED TO TERMINALS H3 & H4.
7. MAX LOAD: 5VA SEALED, 10VA INRUSH
8. MP-A1 NOT USED IN THE FOLLOWING UNITS:
   015,020: ALL UNITS
   030-045: 400V, 460V UNITS WITHOUT DIGITAL SCROLL
9. MP-A2 NOT USED IN THE FOLLOWING UNITS:
   015,020: ALL UNITS
   030-045: 400V, 460V UNITS
10. MP-A3 NOT USED IN THE FOLLOWING UNITS:
    040,045: 400V, 460V UNITS
11. JUMPER PLUG REQUIRED WHEN MP NOT USED
12. IF CHILLED WATER PUMP INTERLOCK IS USED, REMOVE JUMPER FROM TERMINAL 16 TO 17 AND WIRE INTERLOCK CONTACT ACROSS TERMINALS 16 & 17.

30MP500278 | F

Fig. 3 — Typical Power Wiring Schematic — 30MP015-045 Units

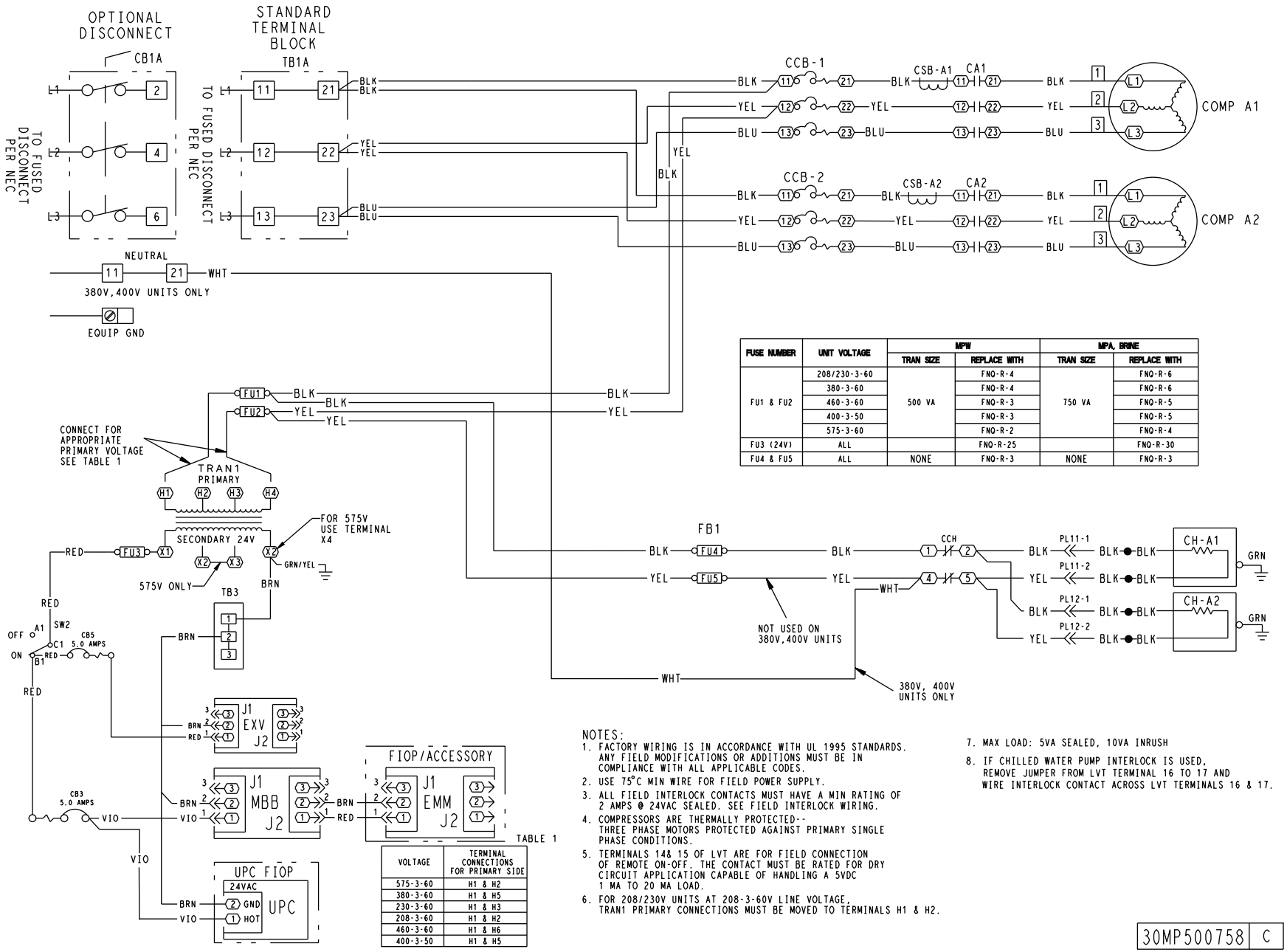

FUSE NUMBER	UNIT VOLTAGE	MPW		MPA, BRINE	
		TRAN SIZE	REPLACE WITH	TRAN SIZE	REPLACE WITH
FU1 & FU2	208/230-3-60	500 VA	FNQ-R-4	750 VA	FNQ-R-6
	380-3-60		FNQ-R-4		FNQ-R-6
	460-3-60		FNQ-R-3		FNQ-R-5
	400-3-50		FNQ-R-3		FNQ-R-5
	575-3-60		FNQ-R-2		FNQ-R-4
FU3 (24V)	ALL		FNQ-R-25		FNQ-R-30
FU4 & FU5	ALL	NONE	FNQ-R-3	NONE	FNQ-R-3

NOTES:

1. FACTORY WIRING IS IN ACCORDANCE WITH UL 1995 STANDARDS. ANY FIELD MODIFICATIONS OR ADDITIONS MUST BE IN COMPLIANCE WITH ALL APPLICABLE CODES.
2. USE 75°C MIN WIRE FOR FIELD POWER SUPPLY.
3. ALL FIELD INTERLOCK CONTACTS MUST HAVE A MIN RATING OF 2 AMPS @ 24VAC SEALED. SEE FIELD INTERLOCK WIRING.
4. COMPRESSORS ARE THERMALLY PROTECTED-- THREE PHASE MOTORS PROTECTED AGAINST PRIMARY SINGLE PHASE CONDITIONS.
5. TERMINALS 14& 15 OF LVT ARE FOR FIELD CONNECTION OF REMOTE ON-OFF. THE CONTACT MUST BE RATED FOR DRY CIRCUIT APPLICATION CAPABLE OF HANDLING A 5VDC 1 MA TO 20 MA LOAD.
6. FOR 208/230V UNITS AT 208-3-60V LINE VOLTAGE, TRAN1 PRIMARY CONNECTIONS MUST BE MOVED TO TERMINALS H1 & H2.
7. MAX LOAD: 5VA SEALED, 10VA INRUSH
8. IF CHILLED WATER PUMP INTERLOCK IS USED, REMOVE JUMPER FROM LVT TERMINAL 16 TO 17 AND WIRE INTERLOCK CONTACT ACROSS LVT TERMINALS 16 & 17.

TABLE 1

VOLTAGE	TERMINAL CONNECTIONS FOR PRIMARY SIDE
575-3-60	H1 & H2
380-3-60	H1 & H5
230-3-60	H1 & H3
208-3-60	H1 & H2
460-3-60	H1 & H6
400-3-50	H1 & H5

30MP500758 C

Fig. 4 — Typical Power Wiring Schematic, 30MP050-071 Units

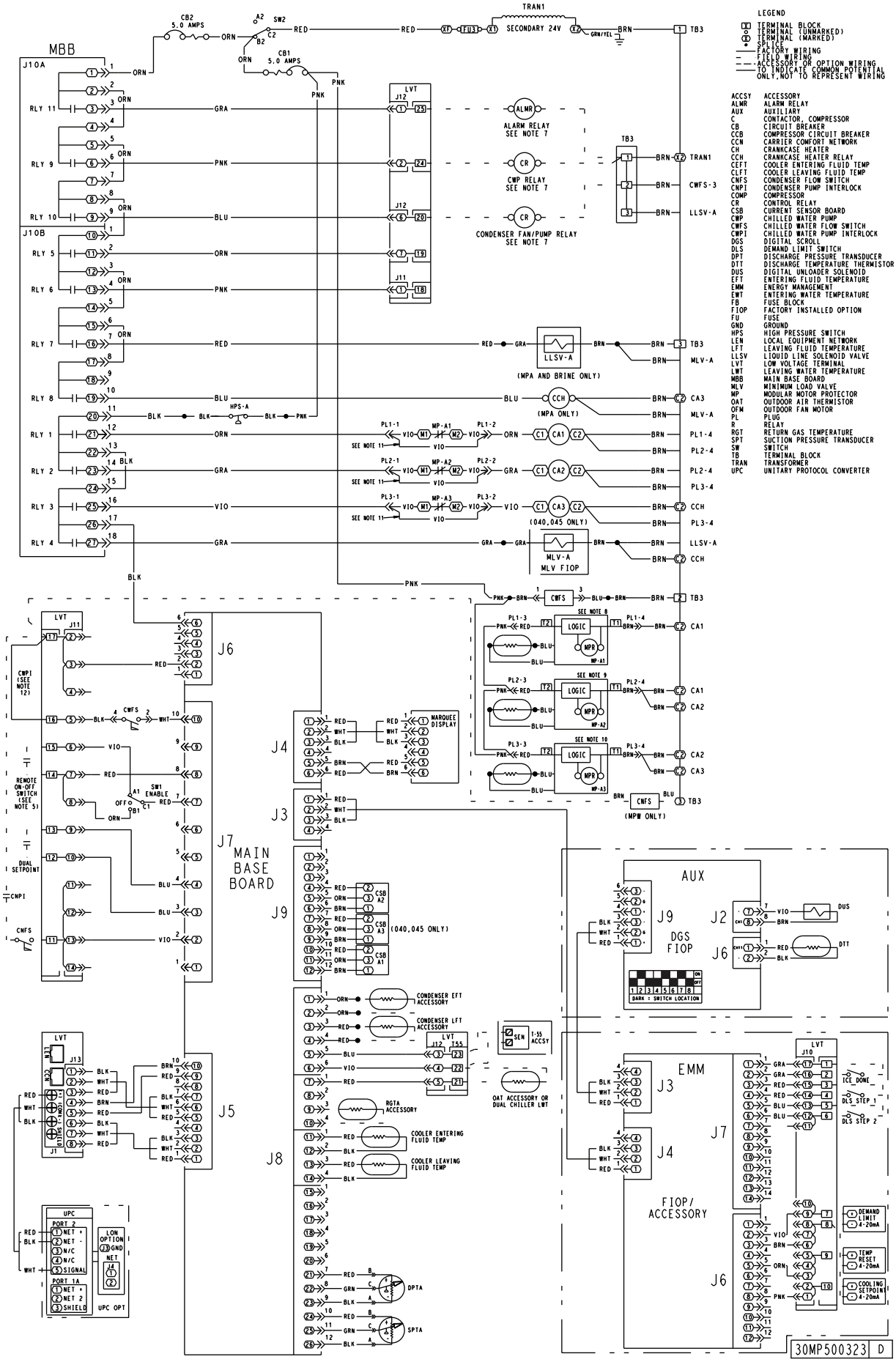

LEGEND

- TERMINAL BLOCK
- TERMINAL (UNMARKED)
- TERMINAL (MARKED)
- SPLICE
- FACTORY WIRING
- FIELD WIRING
- ACCESSORY OR OPTION WIRING
- TO INDICATE COMMON POTENTIAL ONLY, NOT TO REPRESENT WIRING

ACCSY	ACCESSORY
ALWR	ALARM RELAY
AUX	AUXILIARY
C	CONTACTOR, COMPRESSOR
CB	CIRCUIT BREAKER
CCB	COMPRESSOR CIRCUIT BREAKER
CCN	CARRIER COMFORT NETWORK
CH	CRANKCASE HEATER
CCH	CRANKCASE HEATER RELAY
CEFT	COOLER ENTERING FLUID TEMP
CLFT	COOLER LEAVING FLUID TEMP
CWFS	CONDENSER FLOW SWITCH
CNPI	CONDENSER PUMP INTERLOCK
COMP	COMPRESSOR
CR	CONTROL RELAY
CSB	CURRENT SENSOR BOARD
CWP	CHILLED WATER PUMP
CWFS	CHILLED WATER FLOW SWITCH
CWPI	CHILLED WATER PUMP INTERLOCK
DGS	DIGITAL SCROLL
DLS	DEMAND LIMIT SWITCH
DPT	DISCHARGE PRESSURE TRANSDUCER
DTT	DISCHARGE TEMPERATURE THERMISTOR
DUS	DIGITAL UNLOADER SOLENOID
EFT	ENTERING FLUID TEMPERATURE
EMM	ENERGY MANAGEMENT
EWT	ENTERING WATER TEMPERATURE
FB	FUSE BLOCK
FIOP	FACTORY INSTALLED OPTION
FU	FUSE
GND	GROUND
HPS	HIGH PRESSURE SWITCH
LEN	LOCAL EQUIPMENT NETWORK
LFT	LEAVING FLUID TEMPERATURE
LLSV	LIQUID LINE SOLENOID VALVE
LVT	LOW VOLTAGE TERMINAL
LWT	LEAVING WATER TEMPERATURE
MBB	MAIN BASE BOARD
MLV	MINIMUM LOAD VALVE
MP	MODULAR MOTOR PROTECTOR
OAT	OUTDOOR AIR THERMISTOR
OFM	OUTDOOR FAN MOTOR
PL	PLUG
R	RELAY
RGT	RETURN GAS TEMPERATURE
SPT	SUCTION PRESSURE TRANSDUCER
SW	SWITCH
TB	TERMINAL BLOCK
TRAN	TRANSFORMER
UPC	UNITARY PROTOCOL CONVERTER

Fig. 5 — Typical Control Wiring Schematic — 30MP015-045 Units

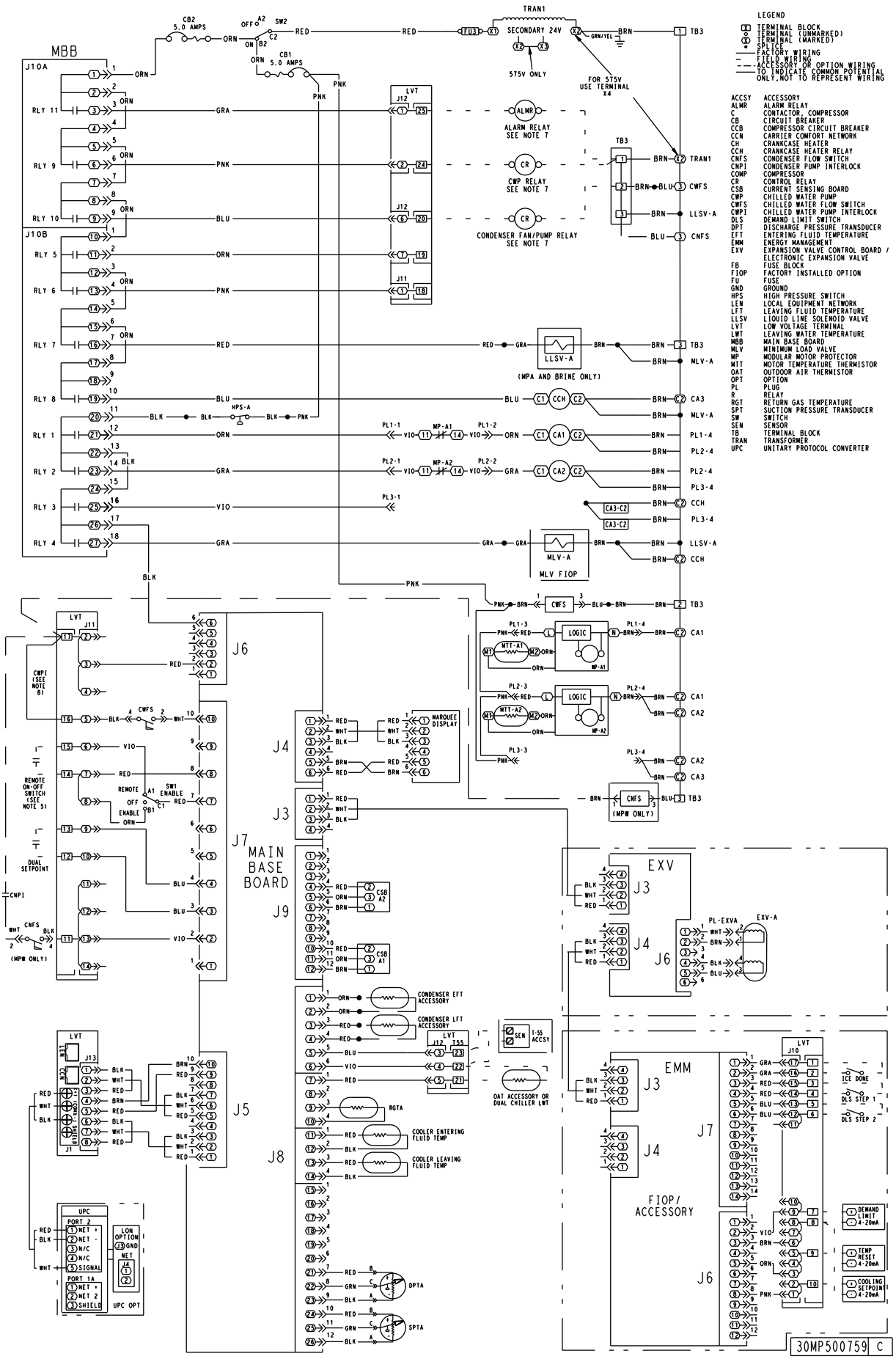

LEGEND

TERMINAL BLOCK
TERMINAL (UNMARKED)
TERMINAL (MARKED)
SPLICE
FACTORY WIRING
FIELD WIRING
ACCESSORY OR OPTION WIRING
TO INDICATE COMMON POTENTIAL ONLY,NOT TO REPRESENT WIRING

ACCSY	ACCESSORY
ALMR	ALARM RELAY
C	CONTACTOR, COMPRESSOR
CB	CIRCUIT BREAKER
CCB	COMPRESSOR CIRCUIT BREAKER
CCN	CARRIER COMFORT NETWORK
CH	CRANKCASE HEATER
CCH	CRANKCASE HEATER RELAY
CNFS	CONDENSER FLOW SWITCH
CNPI	CONDENSER PUMP INTERLOCK
COMP	COMPRESSOR
CR	CONTROL RELAY
CSB	CURRENT SENSING BOARD
CWP	CHILLED WATER PUMP
CWFS	CHILLED WATER FLOW SWITCH
CWPI	CHILLED WATER PUMP INTERLOCK
DLS	DEMAND LIMIT SWITCH
DPT	DISCHARGE PRESSURE TRANSDUCER
EFT	ENTERING FLUID TEMPERATURE
EMM	ENERGY MANAGEMENT
EXV	EXPANSION VALVE CONTROL BOARD / ELECTRONIC EXPANSION VALVE
FB	FUSE BLOCK
FIOP	FACTORY INSTALLED OPTION
FU	FUSE
GND	GROUND
HPS	HIGH PRESSURE SWITCH
LEN	LOCAL EQUIPMENT NETWORK
LFT	LEAVING FLUID TEMPERATURE
LLSV	LIQUID LINE SOLENOID VALVE
LVT	LOW VOLTAGE TERMINAL
LWT	LEAVING WATER TEMPERATURE
MBB	MAIN BASE BOARD
MLV	MINIMUM LOAD VALVE
MP	MODULAR MOTOR PROTECTOR
MTT	MOTOR TEMPERATURE THERMISTOR
OAT	OUTDOOR AIR THERMISTOR
OPT	OPTION
PL	PLUG
R	RELAY
RGT	RETURN GAS TEMPERATURE
SPT	SUCTION PRESSURE TRANSDUCER
SW	SWITCH
SEN	SENSOR
TB	TERMINAL BLOCK
TRAN	TRANSFORMER
UPC	UNITARY PROTOCOL CONVERTER

Fig. 6 — Typical Control Wiring Schematic — 30MP050-071 Units

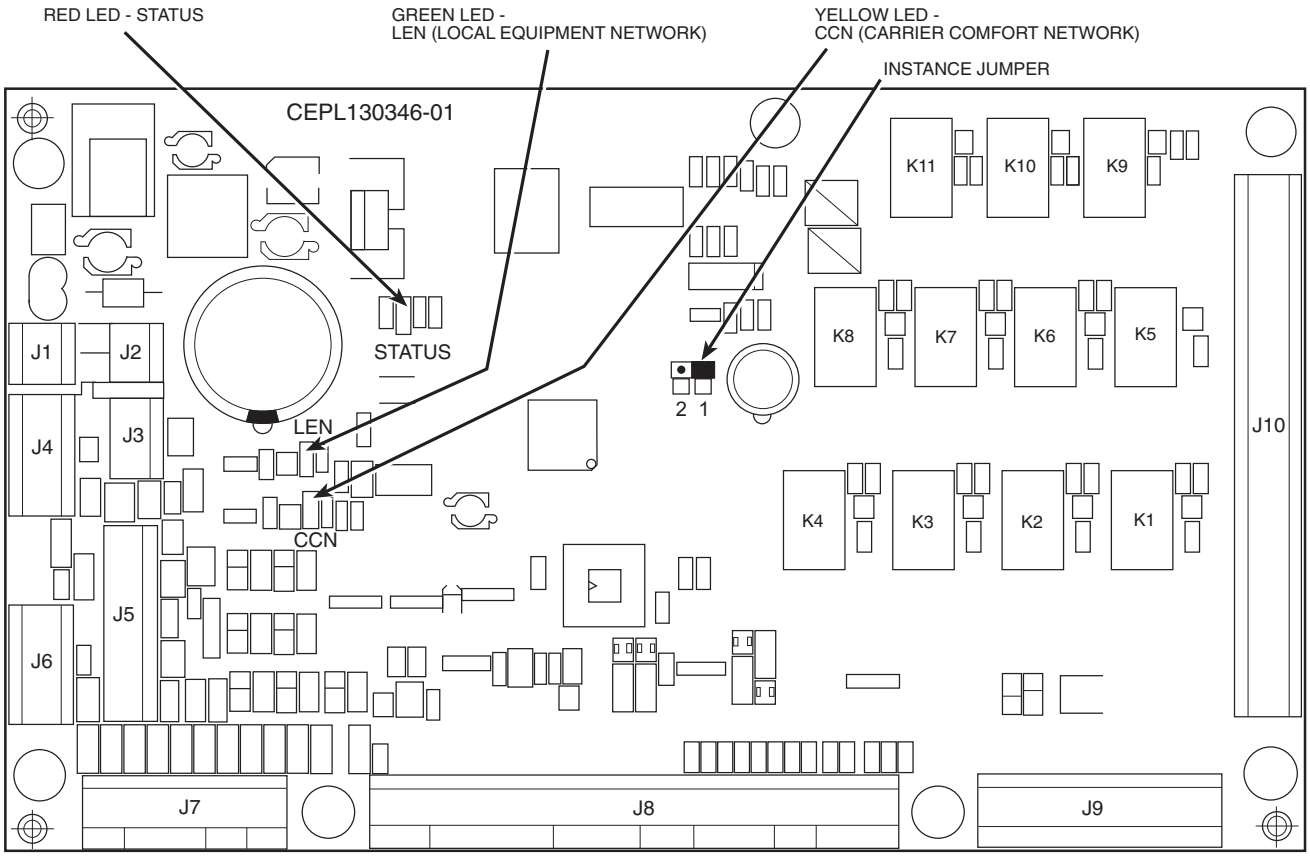

NOTE: Not to scale.

Fig. 7 — Main Base Board

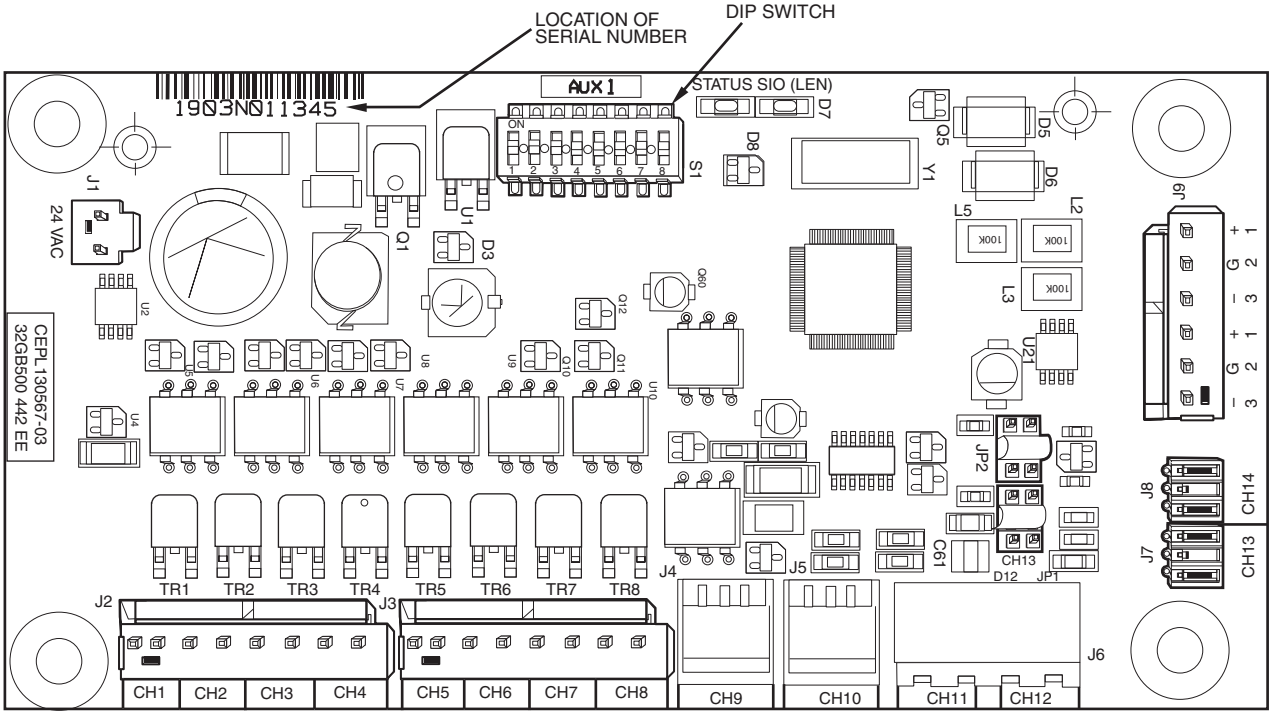

NOTE: Not to scale.

Fig. 8 — AUX Board

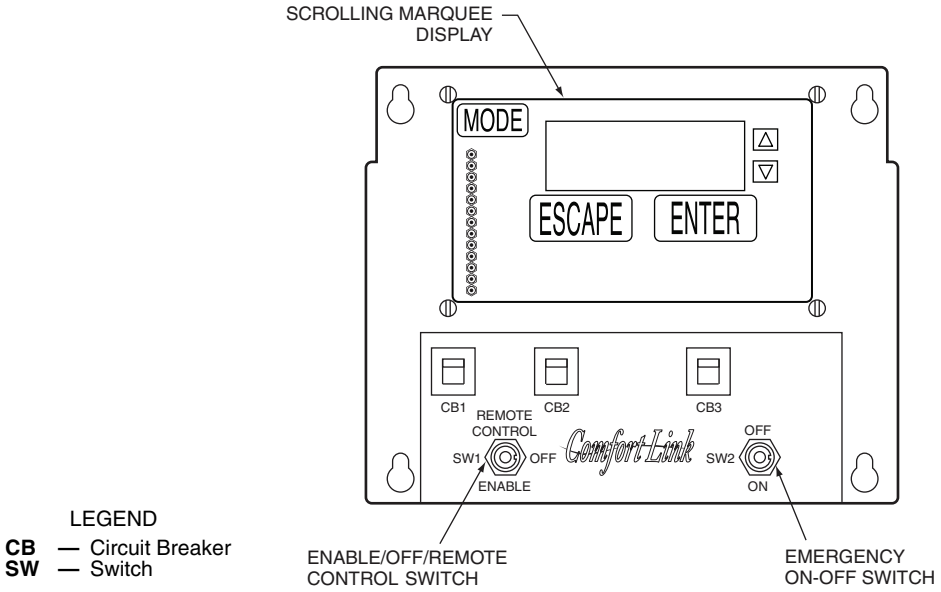

Fig. 9 — Scrolling Marquee, Enable/Off/Remote Contact Switch, and Emergency On/Off Switch Locations

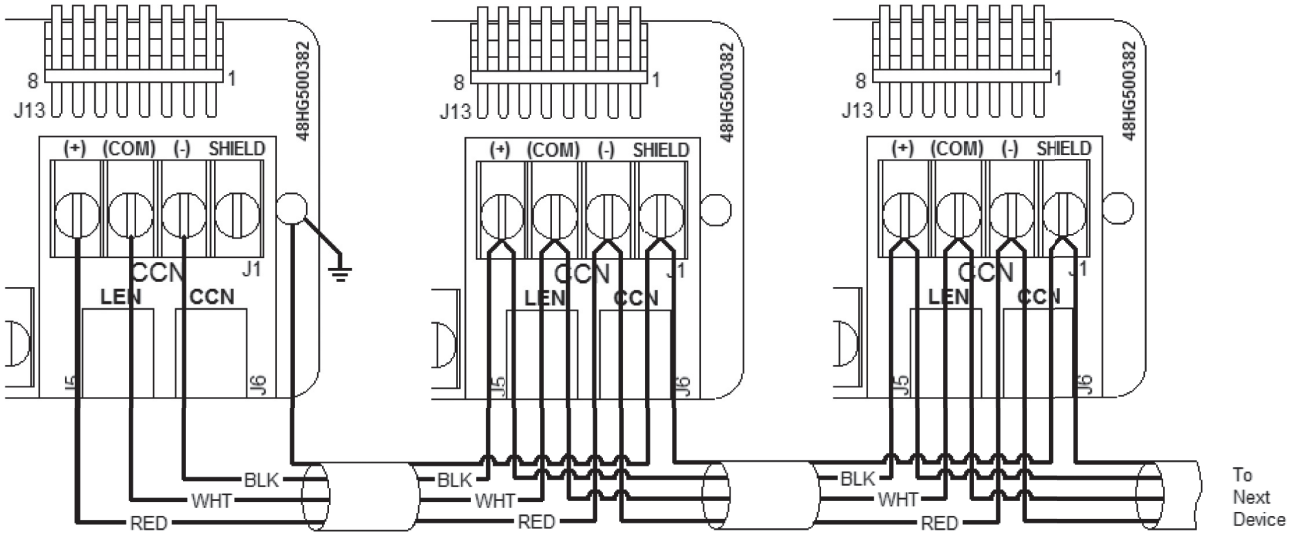

Fig. 10 — CCN Wiring Diagram

IMPORTANT: A shorted CCN bus cable will prevent some routines from running and may prevent the unit from starting. If abnormal conditions occur, unplug the connector. If conditions return to normal, check the CCN connector and cable. Run new cable if necessary. A short in one section of the bus can cause problems with all system elements on the bus.

Table 7 — Thermistor Designations

SCROLLING MARQUEE THERMISTOR DISPLAY NAME	PIN CONNECTION POINT	THERMISTOR INPUT
CLWT	J8-13,14 (MBB)	Cooler Leaving Fluid Temp
CEWT	J8-11,12 (MBB)	Cooler Entering Fluid Temp
D.GAS	J6-1,2 (AUX2)	Discharge Temperature Thermistor (DTT)(Digital Compressor Option Only for unit size 020-045)
RGT.A	J8-9,10 (MBB)	Circuit A Return Gas Temperature (accessory, standard for unit sizes 050-071)
OAT/DLWT	J8-6,7 (MBB), LVT-21,22	Outdoor-Air Temperature Sensor (accessory) or Dual LWT Sensor
SPT	J8-5,6 (MBB) LVT-22,23	Accessory Remote Space Temperature Sensor, T55 Accessory
CDET	J8-1,2 (MBB)	Condenser Entering Fluid Temperature Sensor (30MPW Only)
CDLT	J8-3,4 (MBB)	Condenser Leaving Fluid Temperature Sensor (30MPW Only)

LEGEND
LWT — Leaving Water Temperature
MBB — Main Base Board

Table 8 — Status Inputs

STATUS SWITCH	PIN CONNECTION POINT
Condenser Flow Switch	LVT-11,17, J7-2, J6-2 (MBB)
Dual Set Point	LVT-12,13, J7-3,4 (MBB)
Remote On/Off	LVT-14,15, J7,8 (MBB)
Cooler Flow Switch Interlock	LVT-16,17, J6-2, J7-10 (MBB)
Compressor Fault Signal, A1	J9-11,12 (MBB)
Compressor Fault Signal, A2	J9-5,6 (MBB)
Compressor Fault Signal, A3	J9-8,9 (MBB)

Table 9 — Output Relays

RELAY NO.	DESCRIPTION
K1	Energize Compressor A1
K2	Energize Compressor A2
K3	Energize Compressor A3
K4	Energize Minimum Load Valve
K7	Liquid Line Solenoid Valve
K8	Crankcase Heater Relay
K9	Chilled Water Pump
K10	Condenser Fan/Pump
K11	Alarm Relay

Table 10 — CCN Communication Bus Wiring

MANUFACTURER	PART NO.	
	Regular Wiring	Plenum Wiring
Alpha	1895	—
American	A21451	A48301
Belden	8205	884421
Columbia	D6451	—
Manhattan	M13402	M64430
Quabik	6130	—

CURRENT SENSING BOARD (CSB) — The CSB is used to monitor the status of each compressor by measuring current and providing an analog input to the main base board (MBB) or compressor expansion module (CXB).

ENABLE/OFF/REMOTE CONTACT SWITCH — The Enable/Off/Remote Control switch is a 3-position switch used to control the unit. When switched to the Enable position, the unit is under its own control. Move the switch to the Off position to shut the unit down. Move the switch to the Remote Control position and a field-installed dry contact can be used to start the unit. The contacts must be capable of handling a 24 vac, 50 mA load. In the Enable and Remote Control (dry contacts closed) positions, the unit is allowed to operate and respond to the scheduling configuration, CCN configuration and set point data. See Fig. 9.

EMERGENCY ON/OFF SWITCH — The Emergency On/Off switch should only be used when it is required to shut the unit off immediately. Power to the MBB, CXB, AUX, EMM, and scrolling marquee display is interrupted when this switch is off and all outputs from these modules will be turned off. See Fig. 9.

HIGH PRESSURE SWITCH (HPS) — Each unit is protected with a high pressure switch to prevent excessive condensing pressure. See Table 11 for switch details.

Table 11 — High Pressure Switch

CARRIER PART NUMBER	OPENS AT	CLOSES AT
HK02ZZ001*	650 ± 10 psig (4482 ± 69 kPa)	500 ± 15 psig (3447 ± 103 kPa)
HK02ZZ003	558 ± 15 psig (384 ± 103 kPa)	435 ± 29 psig (2999 ± 200 kPa)

* Available for 30MPA,MPW015-045, 30MPA050-071, 30MPW050-071 high condensing option

PRESSURE TRANSDUCERS — Each refrigerant circuit is equipped with a suction and discharge pressure transducer. The suction pressure transducers have a yellow body with a pressure range of –6.7 to 420 psig (–46 to 2896 kPa) while the discharge transducers have a red body with a pressure range of 14.5 to 667 psig (100 to 4599 kPa). These inputs connect to the MBB (main base board) and are used to monitor the status of the unit and to ensure the unit operates within the compressor envelope. The transducers are used to protect the compressor from operating at too low or too high of a pressure condition. In some cases, the unit may not be able to run at full capacity. The MBB will automatically reduce the capacity of a circuit as needed to maintain specified maximum/minimum operating pressures. Table 12 summarizes pressure transducer characteristics.

Table 12 — Pressure Transducer Identification

TRANSDUCER	CARRIER PART NUMBER	BODY COLOR	PRESSURE RANGE, psi (kPa)
Discharge	HK05ZZ001	Red	14.5 to 667 (100 to 4599)
Suction	HK05SZ003	Yellow	–6.7 to 420 (–46 to 2896)

Sensors — The electronic control uses 2 to 8 thermistors to sense temperatures for controlling chiller operation. See Table 7. These sensors are outlined below. Thermistors cooler leaving fluid, cooler entering fluid, discharge temperature, circuit A return gas temperature, outdoor-air temperature sensor or dual LWT sensor, accessory remote space temperature sensor, condenser entering fluid temperature sensor, and condenser leaving fluid temperature sensor are identical in temperature versus resistance and voltage drop performance. All thermistors are 5,000 ohms at 77 F (25 C) except the space temperature thermistor which is 10,000 ohms. Space temperature thermistor (SPT) is 10,000 ohms at 77 F (25 C). See

Thermistors section on page 51 for temperature-resistance-voltage drop characteristics.

COOLER LEAVING FLUID SENSOR (LWT) — The thermistor is installed in a well in the factory-installed leaving fluid piping connecting to the bottom of the brazed-plate heat exchanger.

COOLER ENTERING FLUID SENSOR (EWT) — The thermistor is installed in a well in the factory-installed entering fluid piping connecting to the top of the brazed-plate heat exchanger.

CONDENSER LEAVING FLUID SENSOR (CDLT) (30MPW Only) — The thermistor is installed in a well in the field-installed leaving fluid piping connecting to the bottom of the brazed-plate heat exchanger. The thermistor and well are a field-installed accessory. The thermistor and well are a field-installed accessory. See Table 13 for thermistor and well part numbers. This sensor must be enabled, ***Configuration→OPT1→CDWS= ENBL***.

CONDENSER ENTERING FLUID SENSOR (CDET) (30MPW Only) — The thermistor is installed in a well in the field-installed entering fluid piping connecting to the top of the brazed-plate heat exchanger. See Table 13 for thermistor and well part numbers.

Table 13 — Thermistors and Wells

THERMISTOR PART NO.	DESCRIPTION	WELL PART NO.
HH79NZ014	3 in., 5,000 ohm Thermistor	10HB50106801
HH79NZ029	4 in., 5,000 ohm Thermistor	10HB50106802
00PPG0000B105A	1-1/2 in.,5,000 ohm Thermistor	00PPG00000B000A

COMPRESSOR RETURN GAS TEMPERATURE SENSOR (RGT.A) — This accessory thermistor can be installed in a well located in the suction line. Use Carrier part number HH79NZ029. This thermistor is standard for unit sizes 050-071. For 015-045 this accessory must be enabled, ***Configuration→OPT1→RG.EN = ENBL.***

OUTDOOR-AIR TEMPERATURE SENSOR (OAT) — This sensor is an accessory that is remotely mounted and used for outdoor air temperature reset. See Table 7. Use Carrier part number HH79NZ023. If sensor is attached, it must be enabled, (***Configuration→OPT1→OAT.E=ENBL***) and include broadcast information.

Outside Air Temperature can be forced to a value at the scrolling marquee or Navigator device. To force the value, access the parameter ***Temperatures→UNIT→OAT***. Press ENTER to view the current value. Press ENTER again and use the up and down arrow keys to display the desired value; then press ENTER to accept the value. On the scrolling marquee, the "." in the lower right corner will flash. On the Navigator device, a flashing "f" will be displayed next to the value. To clear the forced value, press ENTER followed by the up and down arrow keys simultaneously. The value will revert to the actual reading and the flashing "." or "f" will be removed.

DUAL LEAVING WATER TEMPERATURE SENSOR (DLWT) — This input can be connected to the LVT. See Table 7. For dual chiller applications (parallel only are supported), connect the dual chiller leaving fluid temperature sensor (see Table 13 for thermistor and well part numbers) to the outside air temperature input of the Master chiller. If outside-air temperature is required for reset applications, connect the sensor to the Slave chiller and configure the slave chiller to broadcast the value to the Master chiller. The broadcast must be enabled, (***Configuration→BCST→OAT.B=ON***). If there are only two units, the master chiller must be configured to acknowledge the broadcast (***Configuration→BCST→BC.AK =ON***). If there are more than two units, at least one unit must be configured to acknowledge the broadcast (***Configuration→BCST→BC.AK =ON***).

DISCHARGE TEMPERATURE THERMISTOR (DTT) — This sensor is only used on units with a digital compressor. The sensor is mounted on the discharge line close to the discharge of the digital compressor. It attaches to the discharge line using a spring clip and protects the system from high discharge gas temperature when the digital compressor is used. This sensor is a connected to the AUX board.

SPACE TEMPERATURE SENSOR — Space temperature sensors are used to measure the interior temperature of a building.

Space Temperature can be forced to a value at the scrolling marquee or Navigator device. To force the value, access the parameter ***Temperatures→UNIT→SPT***. Press ENTER to view the current value. Press ENTER again and use the up and down arrow keys to display the desired value; then press ENTER to accept the value. On the scrolling marquee, the "." in the lower right corner will flash. On the Navigator device, a flashing "f" will be displayed next to the value. To clear the forced value, press ENTER followed by the up and down arrow keys simultaneously. The value will revert to the actual reading and the flashing "." or "f" will be removed.

The following type of SPT sensor is available:

- Space temperature sensor (33ZCT55SPT) with timed override button (see Fig. 11)

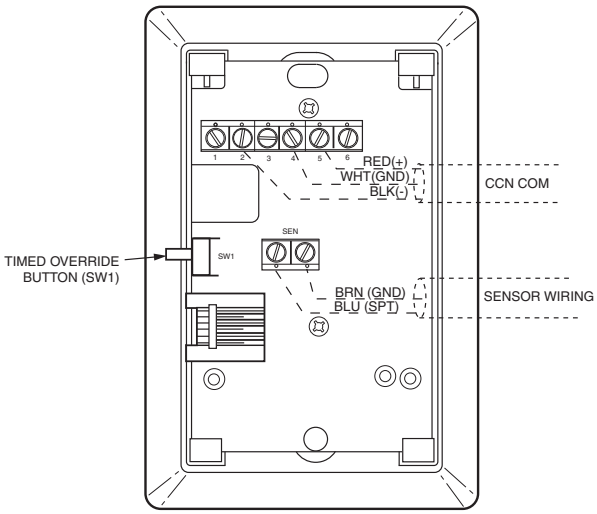

Fig. 11 — Space Temperature Sensor Typical Wiring (33ZCT55SPT)

All of the above sensors are 10,000 ohms at 77 F (25 C), Type II thermistors and are connected to the low voltage terminal (LVT). The sensor should be mounted approximately 5 ft (1.5 m) from the floor in an area representing the average temperature in the space. Allow at least 4 ft (1.2 m) between the sensor and any corner. Mount the sensor at least 2 ft (0.6 m) from an open doorway.

Space temperature sensor wires are to be connected to terminals in the unit main control box. The space temperature sensor includes a terminal block (SEN) and a RJ11 female connector. The RJ11 connector is used for access into the Carrier Comfort Network® (CCN) at the sensor.

To connect the space temperature sensor (Fig. 12):

1. Using a 20 AWG twisted pair conductor cable rated for the application, connect 1 wire of the twisted pair to one SEN terminal and connect the other wire to the other SEN terminal located under the cover of the space temperature sensor.
2. Connect the other ends of the wires to terminals 3 and 4 on LVT located in the unit control box.

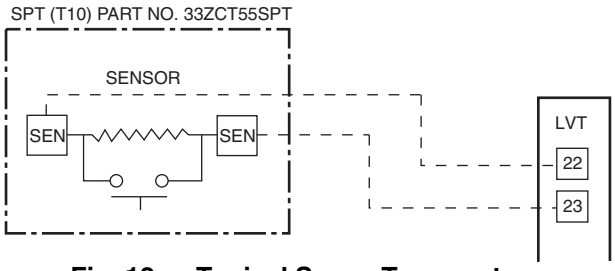

Fig. 12 — Typical Space Temperature Sensor Wiring

Units on the CCN can be monitored from the space at the sensor through the RJ11 connector, if desired. To wire the RJ11 connector into the CCN (Fig. 13):

IMPORTANT: The cable selected for the RJ11 connector wiring MUST be identical to the CCN communication bus wire used for the entire network. Refer to Table 10 for acceptable wiring.

1. Cut the CCN wire and strip ends of the red (+), white (ground), and black (–) conductors. (If another wire color scheme is used, strip ends of appropriate wires.)
2. Insert and secure the red (+) wire to terminal 5 of the space temperature sensor terminal block.
3. Insert and secure the white (ground) wire to terminal 4 of the space temperature sensor.
4. Insert and secure the black (–) wire to terminal 2 of the space temperature sensor.
5. Connect the other end of the communication bus cable to the remainder of the CCN communication bus.

In lieu of a single sensor providing space temperature, an averaging sensor array of either 4 or 9 sensors may be employed to provide a space temperature as shown in Fig. 14. With this control scheme, only T55 space temperature sensors (P/N 33ZCT55SPT) can be used. Total sensor wiring must not exceed 1,000 ft (305 m).

NOTE: The Timed Override feature from a space temperature sensor requires a single space temperature sensor connected to the unit. This feature does not function when used with averaging space temperature sensor arrays.

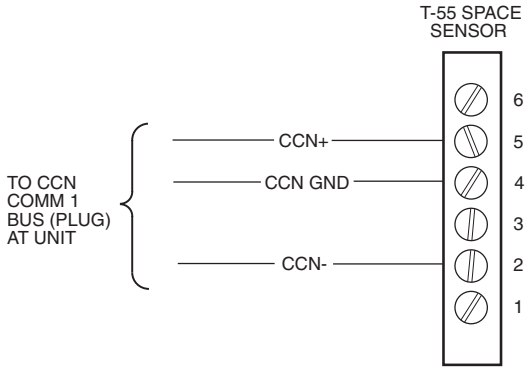

Fig. 13 — CCN Communications Bus Wiring to Optional Space Sensor RJ11 Connector

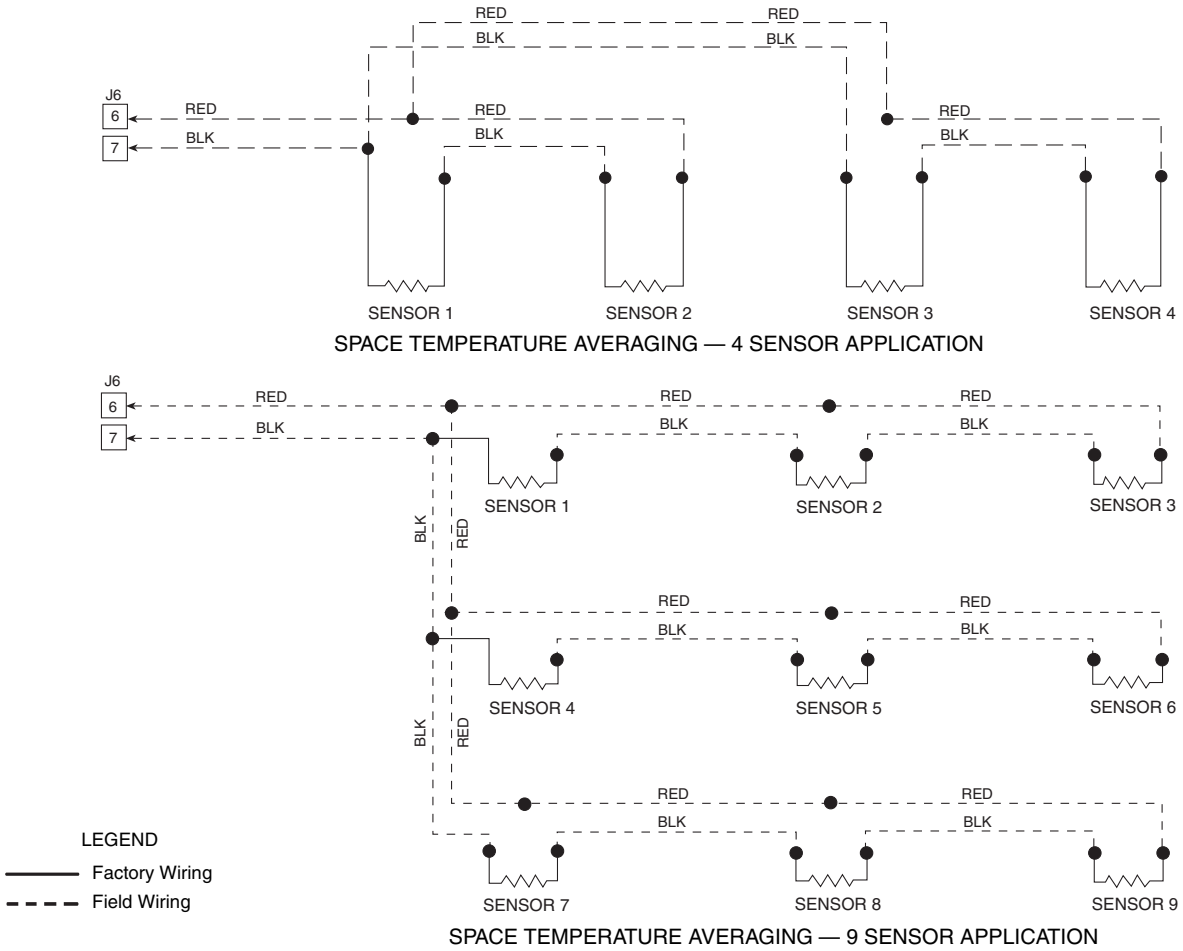

Fig. 14 — Space Temperature Averaging

Energy Management Module (Fig. 15) — This factory-installed option (FIOP) or field-installed accessory is used for the following types of temperature reset, demand limit, and/or ice features:

- 4 to 20 mA leaving fluid temperature reset (requires field-supplied 4 to 20 mA generator)
- 4 to 20 mA cooling set point (requires field-supplied 4 to 20 mA generator)
- Discrete inputs for 2-step demand limit (requires field-supplied dry contacts capable of handling a 24 vac, 50 mA load)
- 4 to 20 mA demand limit (requires field-supplied 4 to 20 mA generator)
- Discrete input for Ice Done switch (requires field-supplied dry contacts capable of handling a 24 vac, 50 mA load)

See the Temperature Reset and Demand Limit sections on pages 35 and 38 for further details.

⚠ CAUTION

Care should be taken when interfacing with other manufacturer's control systems due to possible power supply differences, full wave bridge versus half wave rectification. The two different power supplies cannot be mixed. *Comfort*Link controls use half wave rectification. A signal isolation device should be utilized if a full wave bridge signal generating device is used.

Loss-of-Cooler Flow Protection — A proof-of-cooler flow device is factory installed in all chillers.

Condenser Flow Protection — A proof-of-condenser flow protection accessory can be field installed in the condenser water piping of all chillers. The unit must be configured for the input to be enabled, ***Configuration→OPT1→D.FL.S=ENBL***.

Thermostatic Expansion Valves (TXV) — All 30MP015-045 units are equipped from the factory with conventional TXVs. Two styles of TXVs are employeed. The 30MPA units utilize a 15% bleed port type valve. The 30MPW units do not require a bleed port type valve. The 30MPA units and 30MPW units with medium temperature brine also have factory-installed liquid line solenoids. The liquid line solenoid valves are not intended to be a mechanical shut-off.

The TXV is set at the factory to maintain approximately 8 to 12° F (4.4 to 6.7° C) suction superheat leaving the cooler by monitoring the proper amount of refrigerant into the cooler. All TXVs are adjustable, *but should not be adjusted unless absolutely necessary.*

Electronic Expansion Valves (EXV) — All 30MP050-071 units are equipped from the factory with EXVs.

The 30MPA and 30MPW units with medium brine temperature brine also have the EXV set at the factory to maintain 9°F (5° C) suction superheat leaving the cooler by metering the proper amount of refrigerant into the cooler.

The EXV is designed to limit the cooler saturated suction temperature to 50 F (12.8 C). This makes it possible for the unit to start at high cooler fluid temperatures without overloading the compressor.

Capacity Control — Capacity control is determined by the difference between the leaving fluid temperature and the Control Point (***Run Status→VIEW→CTPT***) and its rate of change. The Control Point (CTPT) is the current set point modified by a temperature reset command. This can be from the temperature reset function or the dual chiller routine. The capacity control routine runs every 30 seconds. The algorithm attempts to maintain the Control Point at the desired set point. Additionally, the control calculates a rise per stage knowing which compressor is on, its capacity and the temperature difference across the cooler (entering fluid temperature minus leaving fluid temperature) to determine the best time to turn on or off the next compressor, institute Minimum Load Control, or change the digital response, if equipped. Entering and Leaving fluid temperatures can be monitored at the unit's interface device ***Run Status→VIEW→EWT*** and ***Run Status→VIEW→LWT***. With this information, a capacity ratio is calculated to determine whether to make any changes to the current stage of capacity. This ratio, Capacity Load/Unload Factor (***Run Status→VIEW→LOD.F***) value ranges from –100% to +100% times Deadband Multiplier (***Configuration→SLCT→Z.GN***). See Deadband Multiplier on this page for more information. If the next stage of capacity is a compressor, the control starts (stops) a compressor when the ratio reaches +100% (–100%) times Deadband Multiplier (***Z.GN***). Once a change in capacity occurs, a 90-second time delay is initiated and the capacity stage is held during this time delay.

When the unit is at stage zero (***Requested Stage Run Status→VIEW→STGE=0***) as part of the capacity control routine, the control adds a 1.2 factor on adding the first stage to reduce cycling.

If the unit is equipped with a digital compressor, it is normally the first compressor started. If the lead compressor is a digital compressor, and is enabled and available (not in alarm), the compressor will start fully loaded for 90 seconds prior to starting to cycle between loaded and unloaded. Once the digital compressor is on, positive changes in ***LOD.F*** will cause the compressor to load. Negative changes to ***LOD.F*** will cause the compressor to unload. This process can occur every 30 seconds. Changes to the digital loading are not subject to the 90-second delay. See Digital Scroll Option on page 40 for additional information.

If the unit is equipped with Minimum Load Control, it will not be active until the unit is on its last stage of capacity. It too is treated as a stage of compression. As a result, Minimum Load Control will be activated when capacity is decreasing, Requested Stage ***STGE***=1, and Capacity Load/Unload Factor ***LOD.F***= -100% times Deadband Multiplier (***Z.GN***). See Table 14 for capacity step information.

MINUTES LEFT FOR START — This value is displayed only in the network display tables (using Service Tool, ComfortVIEW™ or ComfortWORKS™ software) and represents the amount of time to elapse before the unit will start its initialization routine. This value can be zero without the machine running in many situations. These can include being unoccupied, ENABLE/OFF/REMOTE CONTROL switch in the OFF position, CCN not allowing unit to start, Demand Limit in effect, no call for cooling due to no load, and alarm or alert conditions present. If the machine should be running and none of the above are true, a minimum off time (DELY, see below) may be in effect. The machine should start normally once the time limit has expired.

MINUTES OFF TIME — The Minutes Off Time feature (***Configuration→OPT2→DELY***) is a user-configurable time period used by the control to determine how long unit operation is delayed after the unit has been enabled. This delay is initiated following the Enable-Off-Remote Switch being placed in "Enable" position or "Remote" with remote contacts closed, or if power is applied/restored to the unit with the Enable-Off-Remote Switch in a position that would allow the unit to operate. Typically, this time period is configured when multiple machines are located on a single site. For example, this gives the user the ability to prevent all the units from restarting at once after a power failure. A value of zero for this variable does not mean that the unit should be running.

If Minutes Off Time is active, the control will indicate Operating Mode, Minutes Off Time Active (***Operating Modes→MODE→MD10*** will indicate YES).

CAPACITY CONTROL OVERRIDES — The following overrides will modify the normal operation of the routine.

Deadband Multiplier — The user configurable Deadband Multiplier (***Configuration→SLCT→Z.GN***) has a default value of 1.0. The range is from 1.0 to 4.0. When set to other than 1.0, this factor is applied to the capacity Load/Unload Factor. The larger this value is set, the longer the control will delay between adding or removing stages of capacity. Figure 16 shows how compressor starts can be reduced over time if the leaving water temperature is allowed to drift a larger amount above and below the set point. This value should be set in the range of 3.0 to 4.0 for systems with small loop volumes.

First Stage Override — If the current capacity stage is zero, the control will modify the routine with a 1.2 factor on adding the first stage to reduce cycling. This factor is also applied when the control is attempting to remove the last stage of capacity.

Slow Change Override — The control prevents the capacity stages from being changed when the leaving fluid temperature is close to the set point (within an adjustable deadband) and moving towards the set point.

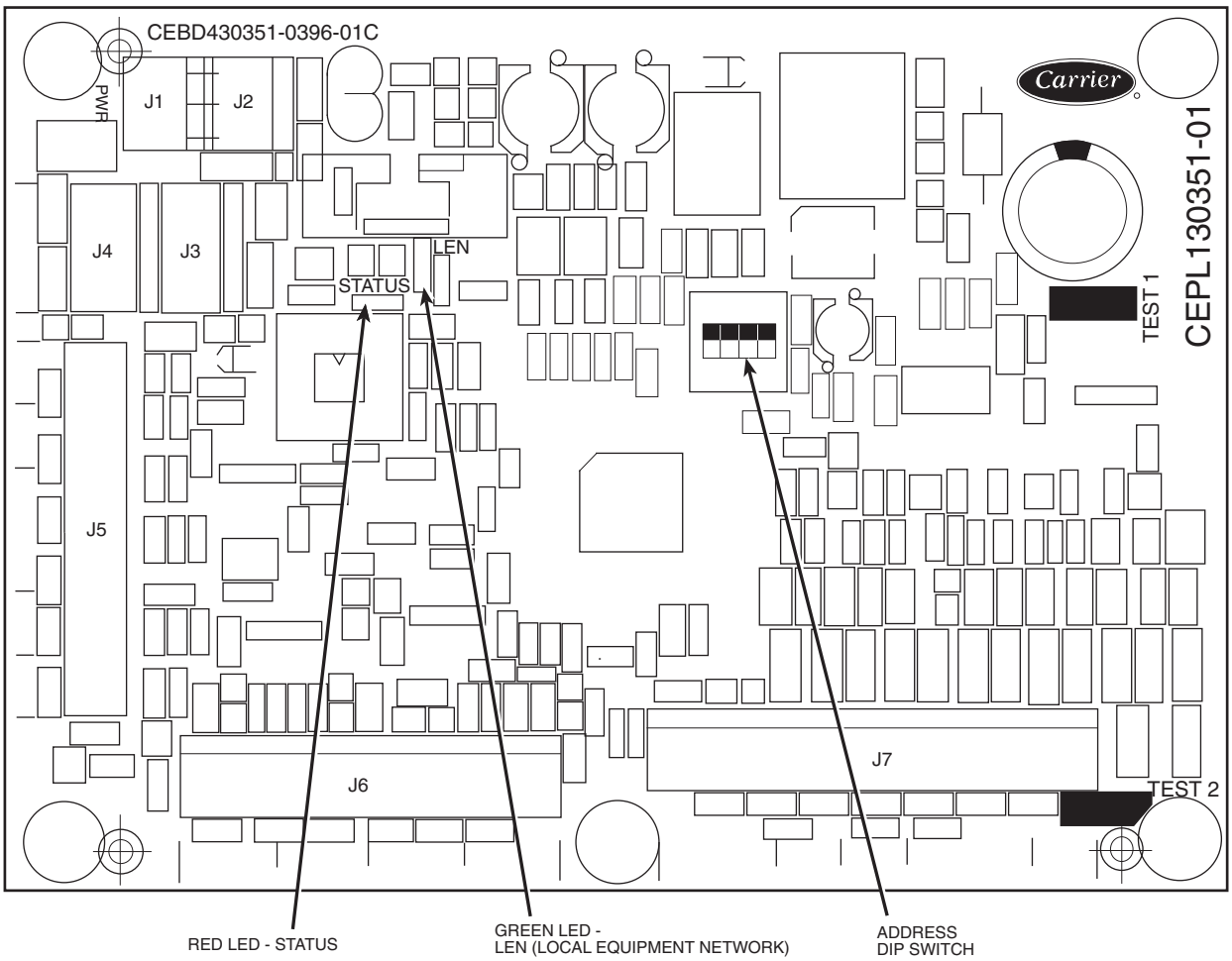

Fig. 15 — Energy Management Module

Table 14 — Part Load Data Percent Displacement, Standard Units

30MP UNIT SIZE	CONTROL STAGE (Run Status→VIEW→STGE)	CAPACITY (% Displacement) WITHOUT MINIMUM LOAD VALVE	CAPACITY (% Displacement) WITH MINIMUM LOAD VALVE
015	1	50	50/18*
	2	100	100
020	1	50	50/25*
	2	100	100
030	1	50	50/34*
	2	100	100
040	1	33	33/21*
	2	67	67
	3	100	100
045	1	33	33/22*
	2	67	67
	3	100	100
050	1	50	50/40*
	2	100	100
055	1	44	44/35*
	2	100	100
060	1	42	42/33*
	2	100	100
065	1	38	38/31*
	2	100	100
071	1	44	44/33*
	2	100	100

*Minimum Load Valve energized. Minimum load valve will only be energized with decreasing capacity. Minimum load valve cannot be enabled with digital compressor operation on 30MP020-045 units.

NOTE: The capacity steps listed for the 30MP055-071 may vary from what is depicted due to the different size compressors used in the circuit.

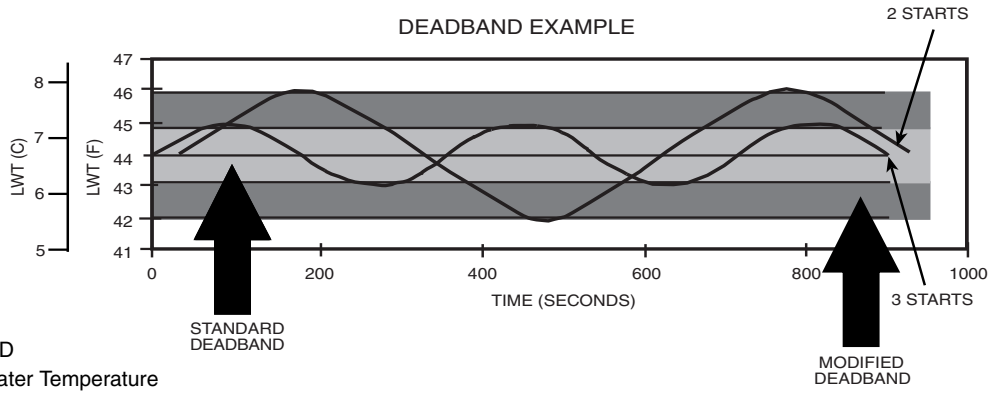

LEGEND

LWT — Leaving Water Temperature

Fig. 16 — Deadband Multiplier

Ramp Loading — Ramp loading (***Configuration→SLCT→CRMP***) limits the rate of change of leaving fluid temperature. If the unit is in a Cooling mode and configured for Ramp Loading, the control makes 2 comparisons before deciding to change stages of capacity. The control calculates a temperature difference between the control point and leaving fluid temperature. If the difference is greater than 4° F (2.2° C) and the rate of change (°F or °C per minute) is more than the configured Cooling Ramp Loading value (***CRMP***), the control does not allow any changes to the current stage of capacity.

Low Entering Fluid Temperature Unloading — When the entering fluid temperature is below the control point, the control will attempt to remove 25% of the current stages being used. If exactly 25% cannot be removed, the control removes an amount greater than 25% but no more than necessary. The lowest stage will not be removed.

Minimum Load Control — If equipped, the minimum load control is energized only when one compressor is running on the circuit and capacity is decreasing.

Cooler Freeze Protection — The control will try to prevent shutting the chiller down on a Cooler Freeze Protection alarm by removing stages of capacity. If the cooler fluid selected is Water, the freeze point is 34 F (1.1 C). If the cooler fluid selected is Brine, the freeze point is the Brine Freeze Point (***Set Points→FRZ→BR.FZ***). This alarm condition (A207) only references leaving fluid temperature and NOT Brine Freeze point. If the cooler leaving fluid temperature is less than the freeze point plus 2.0° F (1.1° C), the control will immediately remove one stage of capacity. This can be repeated once every 30 seconds.

Low Saturated Suction Protection — The control will try to prevent shutting a circuit down due to low saturated suction conditions by removing stages of capacity. The circuit alert condition (T116) compares saturated suction temperature to the configured Brine Freeze Point (***Set Points→FRZ→BR.FZ***). The Brine Freeze point is a user-configurable value that must be left at 34 F (1.1 C) for fresh water systems. A lower value may be entered for systems with brine solutions, but this value should be set according to the freeze protection level of the brine mixture. Failure to properly set this brine freeze point value may permanently damage the brazed plate heat exchanger. The control will initiate Mode 7 (Circuit A) to indicate a

circuit's capacity is limited and that eventually the circuit may shut down.

Time, Day, and Date — Many features of the 30MP controls require that the time, day and date be properly set. This is especially helpful when troubleshooting alarms, as they are reported with a time and date stamp. *Comfort*Link controls also have the ability to automatically adjust for daylight savings time, when configured. The unit time and date is set at the factory based in the Eastern Time Zone.

To set the time, ***Time Clock→TIME→HH.MM*** (Hour and Minute) is the item. The time clock is programmed in a 24-hour format, 00.00 to 23.59. See Table 15.

To set the month, ***Time Clock→DATE→MNTH*** (Month) is the item. This item follows the standard convention, 1=January, 2=February, etc.

To set the day of the month, ***Time Clock→DATE→DOM*** (Day of Month) is the item.

To set the day of the week, ***Time Clock→DATE→DAY*** (Day of Week) is the item. This item uses the following convention: 1=Monday, 2=Tuesday, 3=Wednesday, etc. This setting is important if using the internal schedule.

To set the year, ***Time Clock→DATE→YEAR*** (Year of Century) is the item. This item follows the convention of a 4-digit year, such as 2014.

Table 16 lists the required configurations for these settings.

TIME/DATE BROADCAST — The 30MP unit controls have the ability to broadcast the time and date on the network. If the CCN Time/Date Broadcast configuration ***Configuration→BCST→T.D.BC*=ON**, the control will send the time and date out onto the CCN bus once a minute. If this device is on a CCN network, it is important to make sure that only one device on the bus has this configuration set to **ON**. If more than one time broadcaster is present, problems with the time will occur. If the unit is installed on a network, another unit must be configured to be Broadcast Acknowledger, ***Configuration→BCST→BC.AK***. Only one unit can be the Broadcast Acknowledger. See Table 17 for required configurations.

DAYLIGHT SAVINGS TIME — The 30MP controls have the ability to automatically adjust the time for daylight savings time. To utilize this feature, several items must be configured, including a start date and time to add as well as an end date. All items are found in the Daylight Saving Time sub-mode, ***Time Clock→DST*** and the Broadcast sub-mode, ***Configuration→BCST***. See Table 18 for required configurations.

NOTE: Only the time and date broadcaster can perform daylight savings time adjustments. Even if the unit is stand-alone, the user may want to set ***Configuration→BCST→T.D.BC*** to **ON** to accomplish the daylight savings function. To disable the daylight savings time feature, set ***T.D.BC*** to **OFF**.

Table 15 — Time Required Configuration

TIME CLOCK MODE				
SUBMODE	**ITEM**	**DISPLAY**	**ITEM DESCRIPTION**	**COMMENT**
TIME	HH.MM	XX.XX	Hour and Minute	24-hour format Range: 00.00 to 23.59

Table 16 — Day and Date Required Configurations

TIME CLOCK MODE				
SUBMODE	**ITEM**	**DISPLAY**	**ITEM DESCRIPTION**	**COMMENT**
DATE	MNTH	XX	Month of Year	Range: 1-12 (1=January, 2=February, etc.)
	DOM	XX	Day of Month	Range: 1-31
	DAY	X	Day of Week	Range: 1-7 (1=Monday, 2=Tuesday, etc.)
	YEAR	XXXX	Year of Century	

Table 17 — Broadcast Required Configurations

CONFIGURATION MODE				
SUBMODE	**ITEM**	**DISPLAY**	**ITEM DESCRIPTION**	**COMMENT**
BCST	T.D.BC	ON/OFF	CCN Time/Date Broadcast	Default: Off Must be set to ON to enable automatic Daylight Savings Time correction.*
	BC.AK	ON/OFF	CCN Broadcast Ack'er	Default: Off One unit on the network must be set to ON. The broadcast unit cannot be the acknowledger.

*Only the time and date broadcaster can perform daylight savings time adjustments. Even if the unit is stand-alone, the user may want to set this to ON to accomplish the daylight savings function.

Table 18 — Daylight Savings Required Configurations

TIME CLOCK MODE				
SUBMODE	**ITEM**	**DISPLAY**	**ITEM DESCRIPTION**	**COMMENT**
DST	STR.M	XX	Month	Daylight Savings Start Month Default: 4 (April) Range: 1 to 12 (1=January, 2=February, etc.)
	STR.W	X	Week	Daylight Savings Start Week Default: 1 Range: 1 to 5
	STR.D	X	Day	Daylight Savings Start Day Default: 7 (Sunday) Range: 1 to 7 (1=Monday, 2=Tuesday, etc.)
	MIN.A	XX	Minutes to Add	Default: 60 Range: 0 to 99
	STP.M	XX	Month	Daylight Savings Stop Month Default: 10 (October) Range: 1 to 12 (1=January, 2=February, etc.)
	STP.W	X	Week	Daylight Savings Stop Week Default: 5 Range: 1 to 5
	STP.D	X	Day	Daylight Savings Stop Day Default: 7 (Sunday) Range: 1 to 7 (1=Monday, 2=Tuesday, etc.)
	MIN.S	XX	Minutes to Subtract	Default: 60 Range: 0 to 99
CONFIGURATION MODE				
BCST	T.D.BC	ON/OFF	CCN Time/Date Broadcast	Default: Off Must be set to ON to enable automatic Daylight Savings Time correction.

Operation of Machine Based on Control Method — This term refers to how the machine is started and stopped. Several control methods are available to enable and disable the unit. Machine On/Off control is determined by the configuration of the Control Method, ***Configuration→OPT2→CTRL***.

ENABLE-OFF-REMOTE CONTROL — With the control method set to Enable-Off-Remote Contact, ***CTRL*=0** (Switch), simply switching the Enable/Off/Remote Control switch to the Enable or Remote Control position with external contacts closed will place the unit in an occupied state.

Under normal operation, the Control Mode (***Run Status→VIEW→STAT***) will be **1** (Off Local) when the switch is in the Off position or in the Remote Control position with external contacts open, and will be **5** (On Local) when in the Enable position or Remote Control position with external contacts closed.

OCCUPANCY SCHEDULE — With the control method set to Occupancy, ***CTRL*=2** (Occupancy), the Main Base Board will use the operating schedules as defined under the ***Time Clock*** mode in the scrolling marquee display. If ***Time Clock→SCH.N*** (Schedule Number) is set to **0**, the unit will remain in an occupied mode continuously.

In either case, and whether operating under a Local Schedule or under a CCN Schedule, under normal operation, ***Run Status→VIEW→STAT*** (Control Mode) will be **1** (Off Local) when the Enable/Off/Remote Control switch is Off or in Remote Control with the external contacts open. The control mode will be **3** (Off Time) when the Enable/Off/Remote Control switch is in Enable or Remote Control with external contacts closed and the time of day is during an unoccupied period. Similarly, the control mode will be **7** (On Time) when the time of day is during an occupied period.

Local Schedule — Local Schedules are defined by schedule numbers from 1 to 64. All of these schedules are identical. The schedule number (***Time Clock→SCH.N***) must be set to a number greater than 0 for local schedule. For unit operation, the Enable/Off/Remote Control switch must be in the Enable or Remote Control position with external contacts closed.

For this option to function properly, the correct time, day and date must be set. See the section Time, Day, and Date on page 23. The time clock is programmed in a 24-hour format, 00.00 to 23.59. If configured, the 30MP controls can automatically adjust the time for daylight savings time. See the section Daylight Savings Time on page 23.

If holidays are to be used, they must be configured. Thirty holidays are provided as part of the local schedules, ***HD.01*** through ***HD.30***. Each holiday requires a Holiday Month, ***Time Clock→HOL.L→HD.xx→MON*** (Holiday Start Month) where "xx" is a number from 01 to 30; the Holiday Start Day of Month, ***Time Clock→HOL.L→HD.xx→DAY*** (Start Day) where "xx" is a number from 01 to 30; and the Holiday Duration, ***Time Clock→HOL.L→HD.xx→LEN*** (Duration [Days]) where "xx" is a number from 1 to 99. Holidays that do not occur on fixed dates will require annual programming.

In the example shown in Table 19, the following holidays are to be programmed: January 1 for one day, July 4 for one day, December 24 for two days.

Eight separate time periods, Period 1 through 8, are available as part of the local schedule. Each period has Monday through Sunday and a Holiday day flag, and occupied and unoccupied times. For example, an occupied time from 6:00 AM to 8:00 PM is desired from Monday through Friday. For Saturday an occupied period from 6:00 AM to 12:00 Noon is desired. On Sunday and holidays the unit is to remain unoccupied. This schedule is shown graphically in Fig. 17.

To program this schedule, ***Time Clock→SCH.N*** (Schedule Number) must change from 0 to a number between 1 and 64. In this example, the Schedule Number will be 1. Two of the eight time periods are required to create this schedule. See Table 20.

Table 19 — Holiday Required Configurations

TIME CLOCK MODE					
SUBMODE	**SUB-SUBMODE**	**ITEM**	**DISPLAY**	**ITEM DESCRIPTION**	**COMMENT**
HOL.L	**HD.01**	MON	XX	Holiday Start Month	Default: 0 Range: 0 to 12 (0=Not Used, 1=January, 2=February, etc.) ***Example = 1***
		DAY	XX	Start Day	Default: 0 Range: 0-31 (0=Not Used) ***Example = 1***
		LEN	XX	Duration (Days)	Default: 0 Range: 0 to 99 (0=Not Used) ***Example = 1***
	HD.02	MON	XX	Holiday Start Month	Default: 0 Range: 0-12 (0=Not Used, 1=January, 2=February, etc.) ***Example = 7***
		DAY	XX	Start Day	Default: 0 Range: 0 to 31 (0=Not Used) ***Example = 4***
		LEN	XX	Duration (Days)	Default: 0 Range: 0 to 99 (0=Not Used) ***Example = 1***
	HD.03	MON	XX	Holiday Start Month	Default: 0 Range: 0 to 12 (0=Not Used, 1=January, 2=February, etc.) ***Example = 12***
		DAY	XX	Start Day	Default: 0 Range: 0 to 31 (0=Not Used) ***Example = 24***
		LEN	XX	Duration (Days)	Default: 0 Range: 0 to 99 (0=Not Used) ***Example = 2***

Table 20 — Occupancy Schedule Required Configurations

TIME CLOCK MODE					
SUBMODE	**SUB-SUBMODE**	**ITEM**	**DISPLAY**	**ITEM DESCRIPTION**	**COMMENT**
SCH.N			XX	Schedule Number XX	Default: 0 Range: 0 to 99 ***Example = 1***
SCH.L	**PER.1**	OCC.1	XX.XX	Period Occupied Time	Default: 00.00 Range: 00.00 to 23.59 ***Example = 06.00***
		UNC.1	XX.XX	Period Unoccupied Time	Default: 00.00 Range: 00.00-23.59 ***Example = 20.00***
		MON.1	YES/NO	Monday in Period	Default: NO ***Example = YES***
		TUE.1	YES/NO	Tuesday in Period	Default: NO ***Example = YES***
		WED.1	YES/NO	Wednesday in Period	Default: NO ***Example = YES***
		THU.1	YES/NO	Thursday in Period	Default: NO ***Example = YES***
		FRI.1	YES/NO	Friday in Period	Default: NO ***Example = YES***
		SAT.1	YES/NO	Saturday in Period	Default: NO ***Example = NO***
		SUN.1	YES/NO	Sunday in Period	Default: NO ***Example = NO***
		HOL.1	YES/NO	Holiday in Period	Default: NO ***Example = NO***
	PER.2	OCC.2	XX.XX	Period Occupied Time	Default: 00.00 Range: 00.00-23.59 ***Example = 06.00***
		UNC.2	XX.XX	Period Unoccupied Time	Default: 00.00 Range: 00.00-23.59 ***Example = 12.00***
		MON.2	YES/NO	Monday in Period	Default: NO ***Example = NO***
		TUE.2	YES/NO	Tuesday in Period	Default: NO ***Example = NO***
		WED.2	YES/NO	Wednesday in Period	Default: NO ***Example = NO***
		THU.2	YES/NO	Thursday in Period	Default: NO ***Example = NO***
		FRI.2	YES/NO	Friday in Period	Default: NO ***Example = NO***
		SAT.2	YES/NO	Saturday in Period	Default: NO ***Example = YES***
		SUN.2	YES/NO	Sunday in Period	Default: NO ***Example = NO***
		HOL.2	YES/NO	Holiday in Period	Default: NO ***Example = NO***

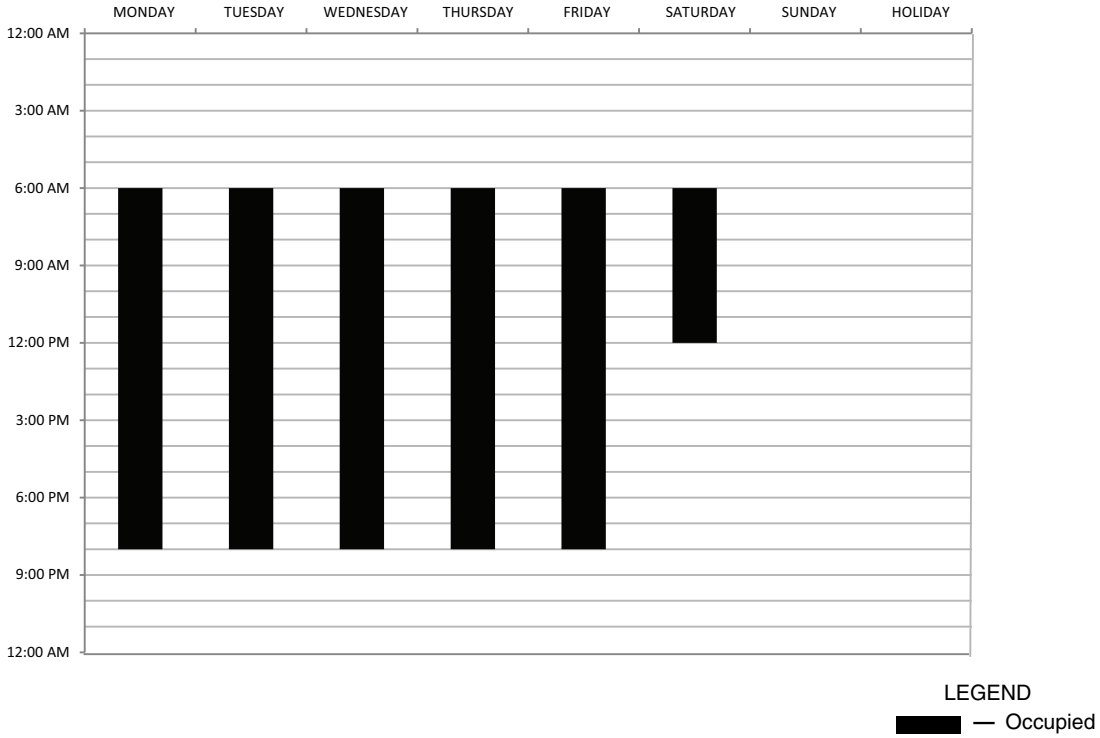

Fig. 17 — Example Schedule

CCN Global Schedule — Schedule Numbers, ***Time Clock→ SCH.N*** from 65 to 99 indicate operation under a CCN Global Schedule. For unit operation based on a CCN Global Schedule, the Enable/Off/Remote Control switch must be in the Enable or Remote Control position with external contacts closed.

In the example in Table 21, the CCN Global Schedule the unit is to follow is 65. To set up the unit to follow this schedule, ***Time Clock→SCH.N*** must be modified.

Any unit can be the Global Schedule Broadcaster. When using a Global Broadcast Schedule, the schedule broadcaster must have the Global Schedule Broadcast, ***Configuration→ BCST→G.S.BC*=ON** and all other devices on the network should have their Global Schedule Broadcast flag set to ***Configuration→BCST→G.S.BC*=OFF**. There can be only one broadcaster of a specific schedule. The unit set to be the schedule broadcaster must have a schedule number from 65 to 99, and the Local Schedule configured as described above. It will broadcast the internal time schedule once every 2 minutes.

Table 21 — CCN Global Schedule Required Configuration

TIME CLOCK MODE				
SUBMODE	**ITEM**	**DISPLAY**	**ITEM DESCRIPTION**	**COMMENT**
SCH.N		XX	Schedule Number XX	Default: 0 Range: 0 to 99 ***Example = 65***

Timed Override — There are several ways to override the occupancy schedule to keep the unit in an occupied period. Schedule overrides can be initiated at the unit's interface with either the scrolling marquee or Navigator™ device, from a space temperature sensor equipped with a timed override button (see unit Installation Instructions for selection and wiring information), or through CCN communications. Initiation of an override period can only be accomplished if the unit is in an unoccupied period. If Timed Override is in effect, ***Operating Modes→ MODE→MD06***, Timed Override in Effect will be active. Override expires after each initiation.

Timed Override from Scrolling Marquee/Navigator Device — A timed override period can be initiated with the unit's interface device. To initiate an override period from the unit's interface device, the number of hours requested must be set in ***Time Clock→OVR→OVR.T*** (Timed Override Hours). See Table 22.

Once a non-zero value has been entered, the unit will resume an occupied period for the duration of the time programmed. The number of hours in the override time period will be displayed in ***OVR.T*** and will count down as the time period progresses. This value cannot be changed until the override period has expired or is cancelled. The override time period can be cancelled by changing the ***OVR.T*** value to 0. This can be done at the unit's interface device or through CCN communications by writing to the point OVR_EXT.

Table 22 — Timed Override Required Configuration

TIME CLOCK MODE				
SUBMODE	**ITEM**	**DISPLAY**	**ITEM DESCRIPTION**	**COMMENT**
OVR	OVR.T	X	Timed Override Hours	Default: 0 Range: 0 to 4

Timed Override from Space Temperature Sensor with Override Button — A timed override period can be initiated using a space temperature sensor with an override button from the space.

NOTE: This feature requires a single space temperature sensor connected to the unit. It does not function when used with averaging space temperature sensor arrays.

To configure this feature, ***Time Clock→OVR→OVR.L*** (Override Time Limit) must be set to a non-zero value. This determines the maximum number of hours the override period can extend an occupied period when the override button is pushed. This item has a range of 0 to 4 hours and should be set to the limit desired for the override period. See Table 23.

Pressing the override button on the Space Temperature Sensor will initiate an override period. The override button must

be pressed for 2 to 4 seconds for the control to acknowledge the call. The control will ignore a momentary press of the override button. However, if the override button is held for longer than 4 seconds, a Space Temperature Thermistor Failure alarm will be generated. The number of hours in the override time period will be displayed in ***Time Clock→OVR→OVR.T*** (Timed Override Hours) and will count down as the time period progresses. See Table 22.

Once a non-zero value has been entered, the unit will resume an occupied period for the duration of the time programmed. The number of hours in the override time period will be displayed in ***OVR.T*** and will count down as the time period progresses. This value cannot be changed until the override period has expired or is cancelled. The override time period can be cancelled by changing the ***OVR.T*** value to **0**. This can be done at the unit's interface device or through CCN communications by writing to the point OVR_EXT.

Table 23 — Space Temperature Override Required Configuration

TIME CLOCK MODE				
SUBMODE	**ITEM**	**DISPLAY**	**ITEM DESCRIPTION**	**COMMENT**
OVR	OVR.L	X	Override Time LImit	Default: 0 Range: 0 to 4

Timed Override from CCN — A timed override period can be initiated through CCN communications by writing to the point OVR_EXT. This point has a range of 0 to 4 hours and should be set for the desired amount of time.

The number of hours in the override time period will be displayed in ***Time Clock→OVR→OVR.T*** (Timed Override Hours) and will count down as the time period progresses. See Table 22.

Once a non-zero value has been entered, the unit will resume an occupied period for the duration of the time programmed. The number of hours in the override time period will be displayed in ***OVR.T*** and will count down as the time period progresses. This value cannot be changed until the override period has expired or is cancelled. The override time period can be cancelled by changing the ***OVR.T*** value to **0**. This can be done at the unit's interface device or through CCN communications by writing to the point OVR_EXT.

CCN CONTROL — With the control method set to CCN Control, ***CTRL*=3** (CCN), an external CCN device controls the On/Off state of the machine. This CCN device forces the point CHIL_S_S between Start/Stop to control the unit.

Under normal operation, ***Run Status→VIEW→STAT*** (Control Mode) will be **1** (Off Local) when the Enable/Off/Remote Control switch is in the Off position or in the Remote Control position with the remote external contacts open. With the Enable/Off/Remote Control switch in the Enable position or in Remote Control position with the remote external contacts closed, the Control Mode will be **2** (Off CCN) when the CHIL_S_S variable is "Stop." Similarly, the control mode will be **6** (On CCN) when the CHIL_S_S variable is "Start."

Units controlled via communications by a separate third-party building automation system through a translator or UPC Open Controller must be set to CCN Control, ***CTRL*=3**. If the unit is to be monitored only via communications, ***CTRL*=3** (CCN Control) is not required.

Emergency Stop — A controls feature exists to shut down the machine in the event of an emergency. Writing to the CCN Point EMSTOP, the command "EMSTOP" will force the machine to stop all mechanical cooling immediately and shut down. While this feature is enabled, the Control Mode ***Run Status→VIEW→STAT*=4** (Emergency) will be displayed. For the machine to operate normally, the EMSTOP point value should be "ENABLE."

Cooling Set Point Select

SINGLE — Unit operation is based on Cooling Set Point 1 (***Set Points→COOL→CSP.1***).

DUAL SWITCH — Unit operation is based on Cooling Set Point 1 (***Set Points→COOL→CSP.1***) when the Dual Set Point switch contacts are open and Cooling Set Point 2 (***Set Points→COOL→CSP.2***) when they are closed.

DUAL CCN OCCUPIED — Unit operation is based on Cooling Set Point 1 (***Set Points→COOL→CSP.1***) during the Occupied mode and Cooling Set Point 2 (***Set Points→COOL→CSP.2***) during the Unoccupied mode as configured under the local occupancy schedule accessible only from CCN. Schedule Number in Table SCHEDOVR (see Appendix B) must be configured to 1. If the Schedule Number is set to 0, the unit will operate in a continuous 24-hr Occupied mode. Control method must be configured to 0 (switch). See Table 24.

4 TO 20 mA INPUT — Unit operation is based on an external 4 to 20 mA signal input to the Energy Management Module (EMM).

Ice Mode — When Ice Mode is enabled, Cooling Setpoint Select must be set to Dual Switch, Dual 7 day or Dual CCN Occupied and the energy management module (EMM) must be installed. Unit operation is based on Cooling Setpoint 1 (***CSP.1***) during the Occupied mode, Ice Setpoint (***CSP.3***) during the Unoccupied mode with the Ice Done contacts open and Cooling Setpoint 2 (***CSP.2***) during the Unoccupied mode with the Ice Done contacts closed. These 3 set points can be utilized to develop your specific control strategy.

Table 24 illustrates how the control method and cooling set point select variables direct the operation of the chiller and the set point to which it controls. The illustration also shows the ON/OFF state of the machine for the given combinations.

Cooler Pump Control — The AquaSnap® 30MP machines are configured with the Cooler Pump Control (***Configuration→OPT1→CPC***) = ON.

The maximum load allowed for the Chilled Water Pump Starter is 5 VA sealed, 10 VA inrush at 24 volts. The starter coil is powered from the chiller control system. The starter should be wired between LVT 24 and TB3-1. If equipped, the field-installed chilled water pump starter auxiliary contacts should be connected in series with the chilled water flow switch between LVT 16 and LVT 17.

Alarm Routing — A CCN feature within the 30MP units allows for alarm broadcasting.

ALARM ROUTING CONTROL — Alarms recorded on the 30MP unit can be routed through the CCN. To configure this option, the *Comfort*Link control must be configured to determine which CCN elements will receive and process alarms. Input for the decision consists of eight digits, each of which can be set to either 0 or 1. Setting a digit to 1 specifies that alarms will be sent to the system element that corresponds to that digit. Setting all digits to 0 disables alarm processing. The factory default is 00000000. See Figure 18. The default setting is based on the assumption that the unit will not be connected to a network. If the network does not contain a ComfortVIEW™, ComfortWORKS™, TeLink, DataLINK™, or BAClink module, enabling this feature will only add unnecessary activity to the CCN communication bus.

The CCN Point ALRM_CNT is the variable and can be modified with ComfortVIEW software or Network Service Tool only. It cannot be modified with the scrolling marquee or Navigator™ display.

Typical configuration of the Alarm Routing variable is 11010000. This Alarm Routing status will transmit alarms to ComfortVIEW software, TeLink, BAClink, and DataLINK. Alarm routing is not supported with the LON Translator.

Table 24 — Control Methods and Cooling Set Points

Control Type (CTRL)	CCN Chiller CHIL_S_S	Set Point Select (CLSP)	Ice Mode (ICE.M)	Ice Done Status (ICED)	Dual Set Point Switch (DUAL)	Occupancy State (OCC)	Active Set Point (SETP)
0 (Switch)	—	0 (Single)	—	—	—	—	CSP.1
		1 (Dual Switch)	—	—	OFF	—	CSP.1
			—	—	ON	—	CSP.2
			ENBL	—	OFF	—	CSP.1
				ON	ON	—	CSP.2
				OFF	ON	—	CSP.3
		2 (Dual CCN Occupied)	—	—	—	YES	CSP.1
			—	—	—	NO	CSP.2
			ENBL	—	—	YES	CSP.1
				ON	—	NO	CSP.2
				OFF	—	NO	CSP.3
		3 (4 to 20 mA Input)	—	—	—	—	4-20 mA
1 or 2 (Occupancy)	—	0 (Single)	—	—	—	YES	CSP.1
			—	—	—	NO	Off
		1 (Dual Switch)	—	—	OFF	YES	CSP.1
			—	—	ON	YES	CSP.2
			—	—	—	NO	Off
			ENBL	—	OFF	YES	CSP.1
				—	ON	YES	CSP.2
				—	—	NO	Off
		2 (Dual CCN Occupied)	—	—	—	—	Illegal
		3 (4 to 20 mA Input)	—	—	—	YES	4-20 mA
			—	—	—	NO	Off
3 (CCN)	Stop	—	—	—	—	—	Off
	Start	0 (Single)	—	—	—	—	CSP.1
		1 (Dual Switch)	—	—	OFF	—	CSP.1
			—	—	ON	—	CSP.2
			ENBL	—	OFF	—	CSP.1
				ON	ON	—	CSP.2
				OFF	ON	—	CSP.3
		2 (Dual CCN Occupied)	—	—	—	YES	CSP.1
			—	—	—	NO	CSP.2
			ENBL	—	—	YES	CSP.1
				ON	—	NO	CSP.2
				OFF	—	NO	CSP.3
		3 (4 to 20 mA Input)	—	—	—	—	4-20 mA

*Dual set point switch input used. CSP1 used when switch input is open. CSP2 used when switch input is closed.
†Cooling set point determined from 4 to 20 mA input to energy management module (EMM) to terminals TB6-3,5.

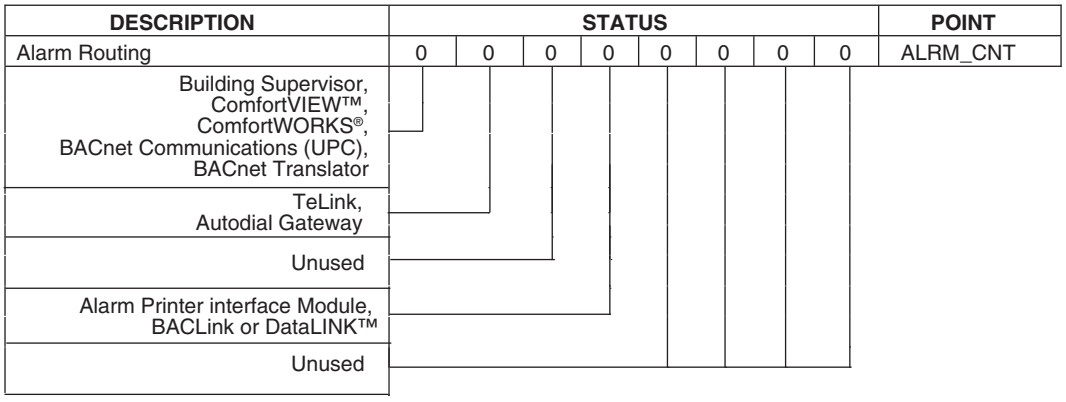

Fig. 18 — Alarm Routing Control

ALARM EQUIPMENT PRIORITY — The ComfortVIEW software uses the equipment priority value to determine the order in which to sort alarms that have the same level. A priority of 0 is the highest and would appear first when sorted. A priority of 7 would appear last when sorted. For example, if two units send out identical alarms, the unit with the higher priority would be listed first. The default is 4. The CCN point EQP_TYPE is the variable and can be changed when using ComfortVIEW software or Network Service Tool only. This variable cannot be changed with the scrolling marquee or Navigator display.

COMMUNICATION FAILURE RETRY TIME — This variable specifies the amount of time that will be allowed to elapse between alarm retries. Retries occur when an alarm is not acknowledged by a network alarm acknowledger, which may be either ComfortVIEW software or TeLink. If acknowledgement is not received, the alarm will be re-transmitted after the number of minutes specified in this decision. The factory default for this item is 10 minutes with a range of 1 to 254 minutes. The CCN Point RETRY_TM is the variable and can be changed with ComfortVIEW software or Network Service Tool only. This variable cannot be changed with the scrolling marquee or Navigator display.

RE-ALARM TIME — This variable specifies the amount of time that will be allowed to elapse between re-alarms. A re-alarm occurs when the conditions that caused the initial alarm continue to persist for the number of minutes specified in this decision. Re-alarming will continue to occur at the specified interval until the condition causing the alarm is corrected. To disable this feature, set the variable to 255. The factory default is 30 minutes with a range of 1 to 254. The CCN Point RE-ALARM is the variable and can be changed with ComfortVIEW software or Network Service Tool only. This variable cannot be changed with the scrolling marquee or Navigator display.

ALARM SYSTEM NAME — This variable specifies the system element name that will appear in the alarms generated by the unit control. The name can be up to 8 alphanumeric characters long and should be unique to the unit. The factory default is SPLIT. The CCN point ALRM_NAM is the variable and can be changed with ComfortVIEW software or Network Service Tool only. This variable cannot be changed with the scrolling marquee or Navigator display.

Cooler Pump Sequence of Operation — At anytime the unit is in an ON status, as defined by the one of the following conditions, the cooler pump relay will be enabled.

1. The Enable-Off-Remote Switch in ENABLE, (***CTRL***=0).
2. Enable-Off-Remote Switch in REMOTE with a Start-Stop remote control closure (***CTRL*=0**).
3. An Occupied Time Period from an Occupancy Schedule in combination with items 1 or 2 (***CTRL*=2**).
4. A CCN Start-Stop Command to Start in combination with items 1 or 2 (***CTRL*=3**).

Certain alarm conditions and Operating Modes will turn the cooler pump relay ON. This sequence will describe the normal operation of the pump control algorithm.

When the unit cycles from an ON state to an OFF state, the cooler pump output will remain energized for the Cooler Pump Shutdown Delay (***Configuration→OPT1→PM.DY***). The delay is configurable from 0 to 10 minutes. The factory default is 1 minute. If the pump output was deenergized during the transition period, the pump output will not be energized.

The Cooler Pump Relay will be energized when the machine is ON. The chilled water pump interlock circuit consists of a chilled water flow switch and a field-installed chilled water pump interlock. If the chilled water pump interlock circuit does not close within five (5) minutes of starting, an A200 - Cooler Flow/Interlock failed to close at Start-Up alarm1 will be generated and chiller will not be allowed to start.

If the chilled water pump interlock or chilled water flow switch opens for at least three (3) seconds after initially being closed, an A201 - Cooler Flow 1 Interlock Contacts Opened During Normal Operation alarm will be generated and the machine will stop.

Condenser Pump/Condenser Fan Output Control — The main base board (MBB) has the capability to control either a condenser fan output or a condenser pump output depending on the unit configuration.

If the unit is configured for ***Configuration→UNIT→TYPE*** = 2 (air cooled), then the output will be off as long as capacity is equal to 0 and will be energized 5 seconds before a compressor is started and remain energized until capacity is 0 again.

If the unit is configured for ***Configuration→UNIT→TYPE*** = 3 (water cooled), then the output will be used for condenser pump control and additional configuration is required. To enable the condenser pump control, use ***Configuration→OPT1→D.PM.E***. The pump can be configured for no pump control (0), on when occupied (1), and on when capacity is greater than 0 (2).

Configuring and Operating Dual Chiller Control — The dual chiller routine is available for the control of two units supplying chilled fluid on a common loop. This control algorithm is designed for parallel fluid flow arrangement only. One chiller must be configured as the master chiller, the other as the slave. An additional leaving fluid temperature thermistor (Dual Chiller LWT) must be installed as shown in Fig. 19 and 20 and connected to the master chiller. Refer to Sensors section, page 17, for wiring. The CCN communication bus must be connected between the two chillers. Connections can be made to the CCN screw terminals on LVT. Refer to Carrier Comfort Network® Interface section, page 7, for wiring information. Configuration examples are shown in Tables 25 and 26.

Refer to Table 25 for dual chiller configuration. In this example the master chiller will be configured at address 1 and the slave chiller at address 2. The master and slave chillers must reside on the same CCN bus (***Configuration→CCN→CCNB***) but cannot have the same CCN address (***Configuration→CCN→CCNA***). Both master and slave chillers must have Lead/Lag Chiller Enable (***Configuration→RSET→LLEN***) configured to ENBL. Master/Slave Select (***Configuration→RSET→MSSL***) must be configured to MAST for the master chiller and SLVE for the slave. Also in this example, the master chiller will be configured to use Lead/Lag Balance Select (***Configuration→RSET→LLBL***) and Lead/Lag Balance Delta (***Configuration→RSET→LLBD***) to even out the chiller run-times weekly. The Lag Start Delay (***Configuration→RSET→LLDY***) feature will be set to 10 minutes. This will prevent the lag chiller from starting until the lead chiller has been at 100% capacity for the length of the delay time. Parallel configuration (***Configuration→RSET→PARA***) can only be configured to YES. The variables ***LLBL***, ***LLBD*** and ***LLDY*** are not used by the slave chiller.

Dual chiller start/stop control is determined by configuration of Control Method (***Configuration→OPT2→CTRL***) of the Master chiller. The Slave chiller should always be configured for ***CTRL*=0** (Switch). If the chillers are to be controlled by Remote Controls, both Master and Slave chillers should be enabled together. Two separate relays or one relay with two sets of contacts may control the chillers. The Enable/Off/Remote Control switch should be in the Remote Control position on both the Master and Slave chillers. The Enable/Off/Remote Control switch should be in the Enable position for ***CTRL*=2** (Occupancy) or ***CTRL*=3** (CCN Control).

Both chillers will stop if the Master chiller Enable/Off/Remote Control switch is in the Off position. If the Emergency Stop switch is turned off or an alarm is generated on the Master chiller the Slave chiller will operate in a Stand-Alone mode. If the Emergency Stop switch is turned off or an alarm is generated on the Slave chiller the Master chiller will operate in a Stand-Alone mode.

The master chiller controls the slave chiller by changing its Control Mode (***Run Status→VIEW→STAT***) and its operating setpoint or Control Point (***Run Status→VIEW→CT.PT***).

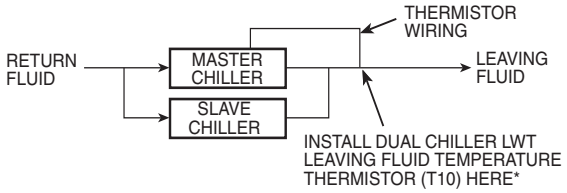

*See Table below and Fig. 21 for thermistor and well part numbers.

Fig. 19 — Dual Chiller Thermistor Location

PART NUMBER	DIMENSIONS in. (mm)	
	A	B
10HB50106801	3.10 (78.7)	1.55 (39.4)
10HB50106802	4.10 (104.1)	1.28 (32.5)
00PPG00000B000A	2.32 (58.86)	1.31 (33.28)

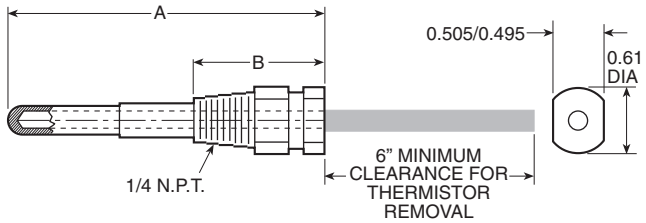

Fig. 20 — Dual Leaving Water Thermistor Well 10HB50106801 and 10HB50106802

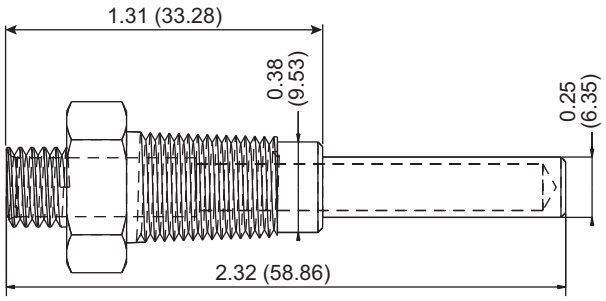

Fig. 21 — Brass Well 00PPG00000B000A

Table 25 — Dual Chiller Configuration (Master Chiller Example)

SUB-MODE	ITEM	KEYPAD ENTRY	DISPLAY	ITEM EXPANSION	COMMENTS
DISP					
UNIT					
OPT1					
OPT2		ENTER	CTRL	CONTROL METHOD	
	CTRL	ENTER	0	SWITCH	DEFAULT 0
		ESCAPE	OPT2		
CCN		↓	CCN		
	CCNA	ENTER	1	CCN ADDRESS	DEFAULT 1
		↓	CCNB		
	CCNB	ENTER	0	CCN BUS NUMBER	DEFAULT 0
		ESCAPE	CCN		
		↓	RSET		PROCEED TO SUBMODE **RESET**
RSET		ENTER	CRST	COOLING RESET TYPE	
		↓	LLEN	LEAD/LAG CHILLER ENABLE	↓ 15 ITEMS
	LLEN	ENTER	DSBL		SCROLLING STOPS
		ENTER	DSBL		VALUE FLASHES
		↑	ENBL		SELECT ENBL
	LLEN	ENTER	ENBL	LEAD/LAG CHILLER ENABLE	CHANGE ACCEPTED
		ESCAPE	LLEN		
		↓	MSSL	MASTER /SLAVE SELECT	
	MSSL	ENTER	MAST	MASTER /SLAVE SELECT	DEFAULT MAST
		ESCAPE	MSSL		
		↓	SLVA	SLAVE ADDRESS	
	SLVA	ENTER	0		SCROLLING STOPS
		ENTER	0		VALUE FLASHES
		↑	2		SELECT 2
	SLVA	ENTER	2	SLAVE ADDRESS	CHANGE ACCEPTED
		ESCAPE	SLVA		
		↓	LLBL	LEAD/LAG BALANCE SELECT	
	LLBL	ENTER	0		SCROLLING STOPS
		ENTER	0		VALUE FLASHES
		↑	2		SELECT 2 - Automatic

Table 25 — Dual Chiller Configuration (Master Chiller Example) (cont)

SUB-MODE	ITEM	KEYPAD ENTRY	DISPLAY	ITEM EXPANSION	COMMENTS
RSET	LLBL	ENTER	2	LEAD/LAG BALANCE SELECT	CHANGE ACCEPTED
		ESCAPE	LLBL		
		↓	LLBD	LEAD/LAG BALANCE DELTA	
	LLBD	ENTER	168	LEAD/LAG BALANCE DELTA	DEFAULT 168
		ESCAPE	LLBD		
		↓	LLDY	LAG START DELAY	
	LLDY	ENTER	5		SCROLLING STOPS
		ENTER	5		VALUE FLASHES
		↑	10		SELECT 10
	LLDY	ENTER	10	LAG START DELAY	CHANGE ACCEPTED
		ESCAPE	LLDY		
		ESCAPE	RSET		
	PARA	ENTER	YES		MASTER COMPLETE

NOTES:
1. Master Control Method (CTRL) can be configured as 0-Switch, 2-Occupancy or 3-CCN.
2. Parallel Configuration (PARA) cannot be changed.

Table 26 — Dual Chiller Configuration (Slave Chiller Example)

SUB-MODE	ITEM	KEYPAD ENTRY	DISPLAY	ITEM EXPANSION	COMMENTS
DISP					
UNIT					
OPT1					
OPT2		ENTER	CTRL	CONTROL METHOD	
	CTRL		0	SWITCH	DEFAULT 0
		ESCAPE	OPT2		
CCN		↓	CCN		
		↓	CCNA		
	CCNA	ENTER	1	CCN ADDRESS	SCROLLING STOPS
		ENTER	1		VALUE FLASHES
		↑	2		SELECT 2 (SEE NOTE 2)
	CCNA	ENTER	2	CCN ADDRESS	CHANGE ACCEPTED
		ESCAPE	CCN		
	CCNB	ENTER	0	CCN BUS NUMBER	DEFAULT 0 (SEE NOTE 3)
		ESCAPE	CCN		
		↓	RSET		PROCEED TO SUBMODE **RSET**
RSET		ENTER	CRST	COOLING RESET TYPE	
		↓	LLEN	LEAD/LAG CHILLER ENABLE	↓ 15 ITEMS
	LLEN	ENTER	DSBL		SCROLLING STOPS
		ENTER	DSBL		VALUE FLASHES
		↑	ENBL		SELECT ENBL
	LLEN	ENTER	ENBL	LEAD/LAG CHILLER ENABLE	CHANGE ACCEPTED
		ESCAPE	LLEN		
		↓	MSSL	MASTER /SLAVE SELECT	
	MSSL	ENTER	MAST		SCROLLING STOPS
		ENTER	MAST		VALUE FLASHES
		↑	SLVE		SELECT SLVE
	MSSL	ENTER	SLVE	MASTER /SLAVE SELECT	CHANGE ACCEPTED
		ESCAPE	MSSL		
		ESCAPE	RSET		SLAVE COMPLETE

NOTES:
1. Slave Control Method (CTRL) must be configured for 0.
2. Slave CCN Address (CCNA) must be different than Master.
3. Slave CCN Bus Number (CCNB) must be the same as Master
4. Slave does not require SLVA, LLBL, LLBD, or LLDY to be configured.

Temperature Reset — The control system is capable of handling leaving-fluid temperature reset based on return cooler fluid temperature. Because the change in temperature through the cooler is a measure of the building load, the return temperature reset is in effect an average building load reset method. The control system is also capable of temperature reset based on outdoor-air temperature (OAT), space temperature (SPT), or from an externally powered 4 to 20 mA signal. Accessory sensors must be used for SPT reset (33ZCT55SPT) and for OAT reset (HH79NZ014). The energy management module (EMM) must be used for temperature reset using a 4 to 20 mA signal. See Tables 27 and 28.

IMPORTANT: Care should be taken when interfacing with other control systems due to possible power supply differences: full wave bridge versus half wave rectification. Connection of control devices with different power supplies may result in permanent damage. *Comfort*Link controls incorporate power supplies with half wave rectification. A signal isolation device should be utilized if the signal generator incorporates a full wave bridge rectifier.

To use outdoor air or space temperature reset, four variables must be configured. In the Configuration mode under the sub-mode RSET, items (***Configuration→RSET→CRST***), (***Configuration→RSET→RM.NO***), (***Configuration→RSET→RM.F***), and (***Configuration→RSET→RT.DG***) must be properly set. See Table 29 — Configuring Outdoor Air and Space Temperature Reset. The outdoor air reset example provides 0° F (0° C) chilled water set point reset at 85.0 F (29.4 C) outdoor-air temperature and 15.0 F (8.3 C) reset at 55.0 F (12.8 C) outdoor-air temperature. The space temperature reset example provides 0° F (0° C) chilled water set point reset at 72.0 F (22.2 C) space temperature and 6.0 F (3.3 C) reset at 68.0 F (20.0 C) space temperature. The variable ***CRST*** should be configured for the type of reset desired. The variable ***RM.NO*** should be set to the temperature that no reset should occur. The variable ***RM.F*** should be set to the temperature that maximum reset is to occur. The variable ***RM.DG*** should be set to the maximum amount of reset desired. Figures 22 and 23 are examples of outdoor air and space temperature resets.

To use return reset, four variables must be configured. In the Configuration mode under the sub-mode ***RSET***, items ***CRST***, ***RT.NO***, ***RT.F*** and ***RT.DG*** must be properly set. See Table 30 — Configuring Return Temperature Reset. This example provides 5.0 F (2.8 C) chilled water set point reset at 2.0 F (1.1 C) cooler ΔT and 0° F (0° C) reset at 10.0 F (5.6 C) cooler ΔT. The variable ***RT.NO*** should be set to the cooler temperature difference (ΔT) where no chilled water temperature reset should occur. The variable ***RT.F*** should be set to the cooler temperature difference where the maximum chilled water temperature reset should occur. The variable ***RM.DG*** should be set to the maximum amount of reset desired.

To verify that reset is functioning correctly proceed to Run Status mode, sub-mode VIEW, and subtract the Active Setpoint (***Run Status→VIEW→SETP***) from the Control Point (***Run Status→VIEW→CTPT***) to determine the degrees reset.

Under normal operation, the chiller will maintain a constant leaving fluid temperature approximately equal to the chilled fluid set point. As the cooler load varies, the entering cooler fluid will change in proportion to the load as shown in Fig. 24. Usually the chiller size and leaving-fluid temperature set point are selected based on a full-load condition. At part load, the fluid temperature set point may be colder than required. If the leaving fluid temperature were allowed to increase at part load, the efficiency of the machine would increase.

Return temperature reset allows for the leaving temperature set point to be reset upward as a function of the return fluid temperature or, in effect, the building load.

Table 27 — Menu Configuration of 4 to 20 mA Cooling Set Point Control

MODE (RED LED)	KEYPAD ENTRY	SUB-MODE	KEYPAD ENTRY	ITEM	DISPLAY	ITEM EXPANSION	COMMENT
CONFIGURATION	ENTER	DISP					
	▼	UNIT					
	▼	OPT1					
	▼	OPT2					
	▼	CCN					
	▼	EXV.A					
	▼	RSET					
	▼	SLCT	ENTER	CLSP	0	COOLING SETPOINT SELECT	
			ENTER		0		Scrolling Stops
			ENTER		0		Flashing ‘0’
			▲		3		Select ‘3’
			ENTER		3		Change Accepted

Table 28 — 4 to 20 mA Reset

SUB-MODE	KEYPAD ENTRY	ITEM	DISPLAY	ITEM EXPANSION	COMMENT
RSET	ENTER	CRST	1	COOLING RESET TYPE	0 = no reset 1 = 4 to 20 mA input 2 = Outdoor air temp 3 = Return Fluid 4 = Space Temperature
	▼	MA.DG	5.0 ΔF (2.8 ΔC)	DEGREES COOL RESET	Default: 0° F (0° C) Reset at 20 mA Range: –30 to 30 F (–16.7 to 16.7 C)

NOTE: The example above shows how to configure the chiller for 4 to 20 mA reset. No reset will occur at 4.0 mA input, and a 5.0 F reset will occur at 20.0 mA. An EMM (energy management module) is required.

Table 29 — Configuring Outdoor Air and Space Temperature Reset

MODE (RED LED)	KEYPAD ENTRY	SUB-MODE	KEYPAD ENTRY	ITEM	DISPLAY		ITEM EXPANSION	COMMENT
					Outdoor Air	Space		
CONFIGURATION	ENTER	DISP						
	▼	UNIT						
	▼	OPT1						
	▼	OPT2						
	▼	CCN						
	▼	EXV.A						
	▼	RSET	ENTER	CRST	2	4	COOLING RESET TYPE	2 = Outdoor-Air Temperature (Connect to LVT-4,5) 4 = Space Temperature (Connect to LVT-3,4)
			▼	RM.NO	85 °F	72 °F	REMOTE - NO RESET TEMP	Default: 125.0 F (51.7 C) Range: 0° to125 F (–17.8 to 51.7 C)
			▼	RM.F	55 °F	68 °F	REMOTE - FULL RESET TEMP	Default: 0.0° F (-17.7 C) Range: 0° to 125 F (–17.8 to 51.7 C)
			▼	RM.DG	15 ΔF	6 ΔF	REMOTE - DEGREES RESET	Default: 0° F (0° C) Range: –30 to 30 F (–16.7 to -16.7 C)

Table 30 — Configuring Return Temperature Reset

MODE (RED LED)	KEYPAD ENTRY	SUB-MODE	KEYPAD ENTRY	ITEM	DISPLAY	ITEM EXPANSION	COMMENT
CONFIGURATION	ENTER	DISP	ENTER	TEST	ON/OFF	TEST DISPLAY LEDs	
	▼	UNIT	ENTER	TYPE	X	UNIT TYPE	
	▼	OPT1	ENTER	FLUD	X	COOLER FLUID	
	▼	OPT2	ENTER	CTRL	X	CONTROL METHOD	
	▼	CCN					
	▼	EXV.A					
	▼	RSET	ENTER	CRST	3	COOLING RESET TYPE	0 = No Reset 1 = 4 to 20 mA Input (EMM required) (Connect to EMM TB6-2,3) 2 = Outdoor-Air Temperature 3 = Return Fluid 4 = Space Temperature (Connect to TB5-5,6)
			▼	RT.NO	10.0 ΔF	RETURN FLUID - NO RESET TEMP	Default: 10.0 ΔF (5.6 ΔC) Range: 0° to 30 F COOLER DT (0.0 to 16.7 C)
			▼	RT.F	2.0 ΔF	RETURN FLUID - FULL RESET TEMP	Default: 0 ΔF (–17.8 ΔC) Range: 0° to 30 F COOLER DT (0.0 to 16.7 C)
			▼	RT.DG	5.0 ΔF	RETURN - DEGREES RESET	Default: 0 ΔF (0 ΔC) Range: –30 to 30°F (–16.7 to 16.7 C)

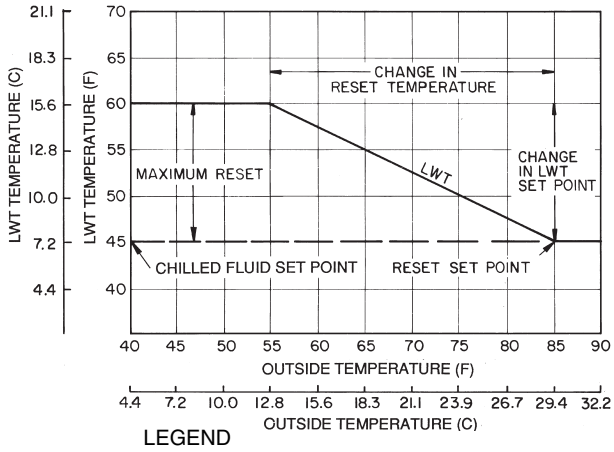

LEGEND

LWT — Leaving Water (Fluid) Temperature

Fig. 22 — Outdoor-Air Temperature Reset

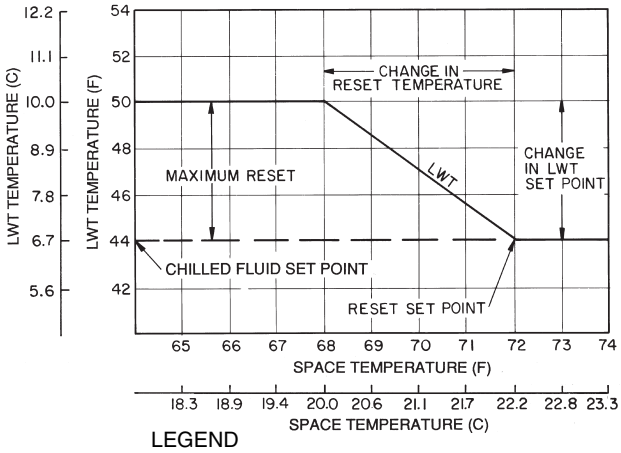

LEGEND

LWT — Leaving Water (Fluid) Temperature

Fig. 23 — Space Temperature Reset

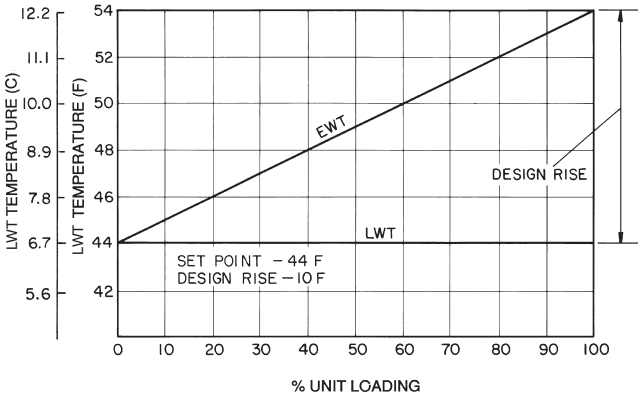

LEGEND

EWT — Entering Water (Fluid) Temperature
LWT — Leaving Water (Fluid) Temperature

Fig. 24 — Standard Chilled Fluid Temperature Control — No Reset

Demand Limit — Demand limit is a feature that allows the unit capacity to be limited during periods of peak energy usage. Three types of demand limiting can be configured. The first type is through 2-stage switch control, which will reduce the maximum capacity to 2 user-configurable percentages. The second type is by 4 to 20 mA signal input which will reduce the maximum capacity linearly between 100% at a 4 mA input signal (no reduction) down to the user-configurable level at a 20 mA input signal. The third type uses the CCN Loadshed module and has the ability to limit the current operating capacity to maximum and further reduce the capacity if required.

NOTE: The 2-stage switch control and 4 to 20-mA input signal types of demand limiting require the energy management module (EMM).

When demand limit is active, digital compressor operation is ignored. Only full compressor operation is allowed.

To use demand limit, select the type of demand limiting to use. Then configure the demand limit set points based on the type selected.

DEMAND LIMIT (2-Stage Switch Controlled) — To configure demand limit for 2-stage switch control, set the Demand Limit Select (***Configuration→RSET→DMDC***) to 1. Then configure the 2 Demand Limit Switch points (***Configuration→RSET→DLS1***) and (***Configuration→RSET →DLS2***) to the desired capacity limit. See Table 31. Capacity steps are controlled by 2 relay switch inputs field wired to LVT as shown in Fig. 5.

For demand limit by 2-stage switch control, closing the first stage demand limit contact will put the unit on the first demand limit level. The unit will not exceed the percentage of capacity entered as Demand Limit Switch 1 set point (***DLS1***). Closing contacts on the second demand limit switch prevents the unit from exceeding the capacity entered as Demand Limit Switch 2 set point. The demand limit stage that is set to the lowest demand takes priority if both demand limit inputs are closed. If the demand limit percentage does not match unit staging, the unit will limit capacity to the closest capacity stage.

To disable demand limit, configure ***DMDC*** to 0. See Table 31.

EXTERNALLY POWERED DEMAND LIMIT (4 to 20 mA Controlled) — To configure demand limit for 4 to 20 mA control, set the Demand Limit Select (***Configuration→RSET→DMDC***) to 2. Then configure the Demand Limit at 20 mA (***Configuration→RSET→DM20***) to the maximum loadshed value desired. Connect the output from an externally powered 4 to 20 mA signal to terminal block LVT, terminals 7 and 8 (+,–). Refer to the unit wiring diagram for these connections to the optional/accessory energy management module and terminal block. The control will reduce allowable capacity to this level for the 20 mA signal. See Table 31 and Fig. 25.

⚠ CAUTION

Care should be taken when interfacing with other manufacturer's control systems due to possible power supply differences, full wave bridge versus half wave rectification. The two different power supplies cannot be mixed. *Comfort*Link controls use half wave rectification. A signal isolation device should be utilized if a full wave bridge signal generating device is used.

DEMAND LIMIT (CCN Loadshed Controlled) — To configure Demand Limit for CCN Loadshed control set the Demand Limit Select (***Configuration→RSET→DMDC***) to 3. Then configure the Loadshed Group Number (***Configuration→RSET→SHNM***), Loadshed Demand Delta (***Configuration→RSET→SHDL***), and Maximum Loadshed Time (***Configuration→RSET→SHTM***). See Table 31.

The Loadshed Group number is established by the CCN system designer. The *Comfort*Link controls will respond to a Redline command from the Loadshed control. When the Redline command is received, the current stage of capacity is set to the maximum stages available. Should the loadshed control send a Loadshed command, the *Comfort*Link controls will reduce the current stages by the value entered for Loadshed Demand delta. The Maximum Loadshed Time is the maximum length of time that a loadshed condition is allowed to exist. The control will disable the Redline/Loadshed command if no Cancel command has been received within the configured maximum loadshed time limit.

Cooling Set Point (4 to 20 mA) — A field supplied and generated, externally powered 4 to 20 mA signal can be used to provide the leaving fluid temperature set point. Connect the signal to LVT-10,8 (+,–). See Table 31 for instructions to enable the function. Figure 26 shows how the 4 to 20 mA signal is linearly calculated on an overall 10 F to 80 F range for fluid types (***Configuration→OPT1→FLUD***) 1 or 2. The set point will be limited by the fluid (***FLUD***) type. Be sure that the chilled water loop is protected at the lowest temperature.

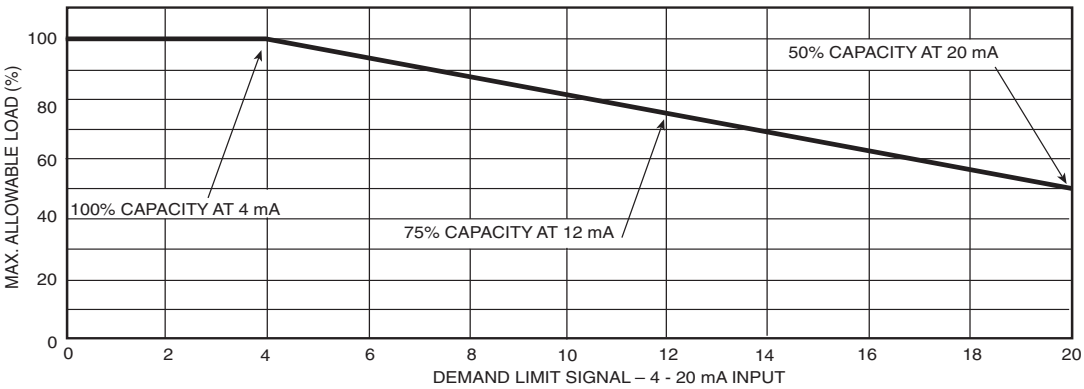

Fig. 25 — 4 to 20-mA Demand Limiting

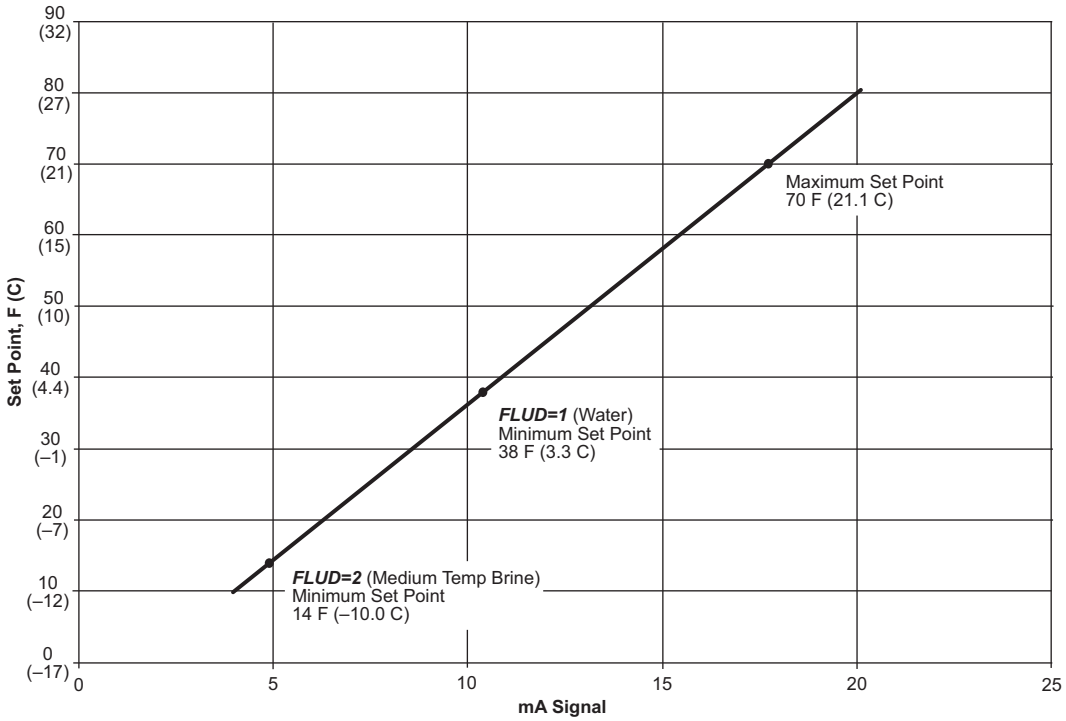

EMM — Energy Management Module

Fig. 26 — Cooling Set Point (4 to 20 mA)

Table 31 — Configuring Demand Limit

MODE	KEYPAD ENTRY	SUB-MODE	KEYPAD ENTRY	ITEM	DISPLAY	ITEM EXPANSION	COMMENT
CONFIGURATION	ENTER	DISP	ENTER	TEST	ON/OFF	Test Display LEDs	
	▼	UNIT	ENTER	TYPE	X	Unit Type	
	▼	OPT1	ENTER	FLUD	X	Cooler Fluid	
	▼	OPT2	ENTER	CTRL	X	Control Method	
	▼	CCN	ENTER	CCNA	X	CCN Address	
	▼	EXV.A					
	▼	RSET	ENTER	CRST	X	Cooling Reset Type	
			▼	DMDC*	X	Demand Limit Select	Default: 0 0 = None 1 = Switch 2 = 4 to 20 mA Input 3 = CCN Loadshed
			▼	DM20	XXX %	Demand Limit at 20 mA	Default: 100% Range: 0 to 100
			▼	SHNM	XXX	Loadshed Group Number	Default: 0 Range: 0 to 99
			▼	SHDL	XXX%	Loadshed Demand Delta	Default: 0% Range: 0 to 60%
			▼	SHTM	XXX MIN	Maximum Loadshed Time	Default: 60 min. Range: 0 to 120 min.
			▼	DLS1	XXX %	Demand Limit Switch 1	Default: 80% Range: 0 to 100%
			▼	DLS2	XXX %	Demand Limit Switch 2	Default: 50% Range: 0 to 100%

*Seven items skipped in this example.

Digital Scroll Option — The 30MP020-045 units have a factory-installed option for a digital scroll compressor which provides additional stages of unloading for the unit. The digital compressor is always installed in the A1 compressor location. When a digital compressor is installed, a digital unloader solenoid (DUS) is used on the digital compressor.

DIGITAL SCROLL OPERATION — A digital scroll operates in two stages — the "loaded state" when the solenoid valve is deenergized and the "unloaded state" when the solenoid valve is energized. During the loaded state, the compressor operates like a standard scroll and delivers full capacity and mass flow.

However, during the unloaded state, there is no capacity and no mass flow through the compressor. The capacity of the system is varied by varying the time the compressor operates in an unloaded and loaded state during a 15-second period. If the DUS is energized for 7 seconds, the compressor will be operating at 47% capacity. If the DUS is energized for 10 seconds, the compressor will be operating at approximately 33% of its capacity. Capacity is the time averaged summation of loaded and unloaded states, and its range is continuous from the minimum configured capacity to 100%. Regardless of capacity, the compressor always rotates with constant speed. As the compressor transitions from a loaded to unloaded state, the discharge and suction pressures will fluctuate and the compressor sound will change.

The *Comfort*Link controller controls and integrates the operation of the DUS into the compressor staging routine to maintain temperature control. When a digital compressor is installed, an additional discharge gas temperature thermistor (DTT) is installed along with the AUX board for control of the DUS.

DIGITAL COMPRESSOR CONFIGURATION — When a digital compressor is installed, the configuration parameter (***Configuration→UNIT→A1.TY***) is configured to YES. There is also a maximum unload time configuration, (***Configuration→UNIT→MAX.T***) that is set to 10 seconds (sizes 020,030) or 7 seconds (sizes 040,045), which indicates the maximum unloading for the digital compressor is 47%. This is done to optimize efficiency of the system.

MINIMUM LOAD CONTROL — Minimum load control is generally not recommended for split systems. If installed, the feature must be enabled in the controls. Minimum load control or hot gas bypass cannot be used in conjunction with the digital scroll option.

Minimum load control can only be added to standard compressor units in the field. This feature will not operate with an optional digital compressor and when the digital function is enabled (***Configuration→Unit→A1.TY*=YES*)***. To enable the minimum load valve, confirm that the digital compressor option is disabled and set Minimum Load Valve Select to YES, (***Configuration→OPT1→MLV.S*=YES**). See Table 32.

NOTE: Minimum Load Control and Digital Compressor operation cannot be used together.

Table 32 — Configuring Minimum Load Control

CONFIGURATION→UNIT		
ITEM	**EXPANSION**	**COMMENTS**
A1.TY	Compressor A1 Digital?	Range: NO/YES Default: Depends on product configuration NO = Not Equipped Value must be set to NO
CONFIGURATION→OPT1		
MLV.S	Minimum Load Vlv Select	Range: NO/YES Default: NO Set to YES to activate

If equipped and enabled, the Minimum Load Control valve is active as the last stage of capacity when the unit is unloading.

MAINTENANCE REMINDER — The 30MP ComfortLink controls have the ability to provide a reminder for service personnel that regularly scheduled strainer maintenance is required. Maintenance interval is a field-configurable item. The service interval should be adjusted for the job site conditions. See Table 33.

Table 33 — Configuring Maintenance Reminder

RUN STATUS→PM→STRN		
ITEM	**EXPANSION**	**COMMENTS**
SI.ST	Strainer Srvc Interval	Range: 0 to 65,500 hrs Default: 8760 hrs Setting SI.ST to 0 disables the feature

PRE-START-UP

IMPORTANT: Before beginning Pre-Start-Up or Start-Up, complete Start-Up Checklist for 30MP Liquid Chiller at end of this publication (pages CL-1 to CL-8). The checklist assures proper start-up of a unit, and provides a record of unit condition, application requirements, system information, and operation at initial start-up.

Do not attempt to start the chiller until following checks have been completed.

System Check

1. Check all auxiliary components, such as chilled fluid pumps, air-handling equipment, condenser pump or other equipment to which the chiller supplies liquid. Consult manufacturer's instructions. Verify that any pump interlock contacts have been properly installed. If the unit has field-installed accessories, be sure all are properly installed and wired correctly. Refer to unit wiring diagrams.
2. Use the scrolling marquee display to adjust the Cooling Set Point.
3. Fill chilled fluid circuit with clean water (with recommended inhibitor added) or other non-corrosive fluid to be cooled. Bleed all air out of the high points of the system. If chilled water is to be maintained at a temperature below 40 F (4.4 C), a brine of sufficient concentration must be used to prevent freeze-up at anticipated suction temperatures. To ensure sufficient loop volume, see Tables 34 and 35.
4. Check tightness of all electrical connections.
5. Oil should be visible in the compressor sight glass(es). See Fig. 27. An acceptable oil level in the compressors is from $^1/_8$ to $^3/_8$ of sight glass when the compressors are off. Adjust the oil level as required. See Oil Charge section on page 49 for Carrier approved oils.
6. Crankcase heaters must be firmly attached to compressors, and must be on for 24 hours prior to start-up (30MPA015-045, 30MPA,MPW050-071 only).
7. Electrical power source must agree with unit nameplate.
8. Check rotation of scroll compressors. Monitor control alarms during first compressor start-up for reverse rotation protection alarm.

Table 34 — Minimum Flow Rates and Minimum Loop Volume — English

UNIT SIZE	FLOW RATE		NORMAL AIR CONDITIONING APPLICATION Gal./Ton			PROCESS COOLING OR LOW AMBIENT OPERATION APPLICATION Gal./Ton		
	EVAPORATOR	CONDENSER						
	Gal./Min	Gal./Min	Std Unit	HGBP	Digital	Std Unit	HGBP	Digital
30MP015	22	22	12	2	N/A	12	3.4	N/A
30MP020	28	28	6	4	3	10	10	6
30MP030	43	43	6	4	3	10	10	6
30MP040	55	55	3	3	3	6	6	6
30MP045	64	64	3	3	3	6	6	6
30MP050	70	70	6	4	N/A	10	6	N/A
30MP055	77	77	6	4	N/A	10	6	N/A
30MP060	84	84	6	4	N/A	10	6	N/A
30MP065	91	91	6	4	N/A	10	6	N/A
30MP071	104	104	6	4	N/A	10	6	N/A

LEGEND
HGBP — Hot Gas Bypass

Table 35 — Minimum Flow Rates and Minimum Loop Volume — SI

UNIT SIZE	FLOW RATE		NORMAL AIR CONDITIONING APPLICATION L per kW			PROCESS COOLING OR LOW AMBIENT OPERATION APPLICATION L per kW		
	EVAPORATOR	CONDENSER						
	L/s	L/s	Std Unit	HGBP	Digital	Std Unit	HGBP	Digital
30MP015	1.4	1.4	13.0	8.6	N/A	13.0	13.0	N/A
30MP020	1.8	1.8	6.5	4.3	3.3	10.8	10.8	6.5
30MP030	2.7	2.7	6.5	4.3	3.3	10.8	10.8	6.5
30MP040	3.5	3.5	3.3	3.3	3.3	6.5	6.5	6.5
30MP045	4.0	4.0	3.3	3.3	3.3	6.5	6.5	6.5
30MP050	4.5	4.5	6.5	4.3	N/A	10.8	6.5	N/A
30MP055	4.9	4.9	6.5	4.3	N/A	10.8	6.5	N/A
30MP060	5.3	5.3	6.5	4.3	N/A	10.8	6.5	N/A
30MP065	5.8	5.8	6.5	4.3	N/A	10.8	6.5	N/A
30MP071	6.6	6.6	6.5	4.3	N/A	10.8	6.5	N/A

LEGEND
HGBP — Hot Gas Bypass

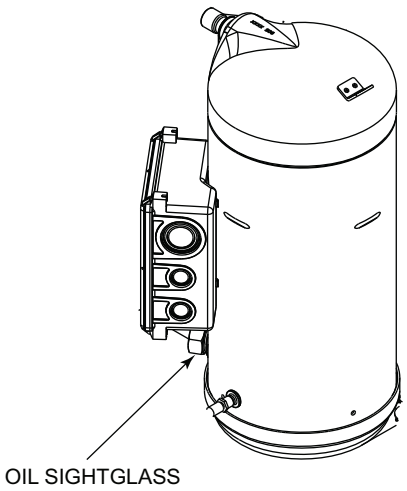

Fig. 27 — Sight Glass Location

START-UP AND OPERATION

IMPORTANT: Before beginning Pre-Start-Up or Start-Up, review Start-Up Checklist at the back of this publication. The checklist assures proper start-up of a unit and provides a record of unit condition, application requirements, system information, and operation at initial start-up.

⚠ CAUTION

Crankcase heaters are wired into the control circuit, so they are always operable as long as the main power supply disconnect is on (closed), even if any safety device is open. Compressor heaters must be on for 24 hours prior to the start-up of any compressor. Equipment damage could result if heaters are not energized for at least 24 hours prior to compressor start-up.

Compressor crankcase heaters must be on for 24 hours before start-up. To energize the crankcase heaters, close the field disconnect. Leave the compressor circuit breakers off/open. The crankcase heaters are now energized.

NOTE: Refer to Start-Up Checklist on pages CL-1 to CL-8.

PRELIMINARY CHARGE (30MPA) — Refer to GTAC II (General Training Air Conditioning), Module 5, Charging, Recovery, Recycling and Reclamation for charging procedures.

The 30MPA units (condenserless) are shipped with a nitrogen holding charge only. Leak check the 30MPA unit, discharge and liquid lines, and the condenser. Be sure the liquid line service valve is open. After leak check is completed, system must be evacuated and dehydrated. Following the evacuation, the system must be fully charged.

The liquid charging method is recommended for complete charging or when additional charge is required.

Using the liquid charging method and charging by weight procedure, charge the circuit with the amount of Puron refrigerant (R-410A) with the sum of the operating charge listed in Table 36 for the base unit, the liquid line charge and the operating charge of the condenser as the preliminary charge.

Table 36 — Preliminary Puron Refrigerant (R-410A) Charge, lb (kg)

UNIT SIZE	OPERATING CHARGE AMOUNT LB (kg)
30MPA015	8.2 (3.7)
30MPA020	10.7 (4.9)
30MPA030	12.5 (5.7)
30MPA040	14.7 (6.7)
30MPA045	15.1 (6.8)
30MPA050	29.7 (13.5)
30MPA055	30.7 (14.0)
30MPA060	33.1 (15.0)
30MPA065	34.0 (15.5)
30MPA071	39.0 (17.7)

NOTE: For liquid line piping, use the following information:

½ in. (12.7 mm) liquid line - 0.6 lb per 10 linear feet (0.27 kg per 3 m)

5/8 in. (15.9 mm) liquid line - 1.0 lb per 10 linear feet (0.45 kg per 3 m)

7/8 in. (22.2 mm) liquid line - 2.0 lb per 10 linear feet (0.91 kg per 3 m)

1 1/8 in. (28.6 mm) liquid line - 3.5 lb per 10 linear feet (1.59 kg per 3 m)

1 3/8 in. (34.9 mm) liquid line - 5.1 lb per 10 linear feet (2.32 kg per 3 m)

⚠ CAUTION

Never charge liquid into the low pressure side of the system. Do not overcharge. Overcharging results in higher discharge pressure, possible compressor damage, and higher power consumption. During charging or removal of refrigerant, be sure cooler water is continuously circulating through the cooler to prevent freezing.

While the unit is running at full capacity, add refrigerant until the sight glass is clear. The required refrigerant is R-410A.

With the unit operating at full load, check liquid line sight glass to be sure the unit is fully charged (bubbles in the sight glass indicate the unit is not fully charged).

IMPORTANT: For proper charging, units equipped with a digital compressor must have the digital compressor operation disabled to maintain stable operation. To disable digital compressor operation, set ***Configuration→UNIT→A1.TY*** (Compressor A1 Digital?) to **NO**. Be sure to re-enable the digital operation after charging operation is complete.

Follow approved evacuation procedures when removing refrigeration. Release remaining pressure to an approved evacuated cylinder.

Actual Start-Up — Actual start-up should be done only under supervision of a qualified refrigeration mechanic.

1. Be sure all service valves are open (30MPA units only).
2. Using the scrolling marquee display, set leaving-fluid set point (***Set Points→COOL→CSP.1***). No cooling range adjustment is necessary.
3. Start chilled fluid pump (if not configured for cooler pump control).
4. Start condenser fluid pump (if not configured for condenser pump control (30MPW only).
5. Turn ENABLE/OFF/REMOTE CONTROL switch to ENABLE position.
6. Allow unit to operate and confirm that everything is functioning properly. Check to see that leaving fluid temperature agrees with leaving set point (***Set Points→COOL→CSP.1***) or (***Set Points→COOL→CSP.2***), or if reset is used, with the control point (***Run Status→VIEW→CTPT***).
7. Check the cooler leaving chilled water temperature to see that it remains well above 32 F (0° C), or the brine freezing point if the unit is a medium temperature brine unit.
8. Recheck compressor oil level (see Oil Charge section).

Check Refrigerant Charge — All 30MPW units are shipped with a complete operating charge of R-410A and should be under sufficient pressure to conduct a leak test after installation. If there is no system pressure, admit nitrogen until a pressure is observed and then proceed to test for leaks. After leaks are repaired, the system must be dehydrated.

All refrigerant charging should be done through the ¼-in. Schrader connection on the liquid line. Do NOT add refrigerant charge through the low-pressure side of the system. If complete charging is required, weigh in the appropriate charge for the circuit as shown on the unit nameplate. If partial charging is required, operate circuit at full load and add charge to reach 9 to 12 F (–12.8 to –11.1 C) subcooling entering the expansion valve. See Step 6b on page 43.

The liquid charging method is recommended for complete charging or when additional charge is required.

NOTE: On units with digital scroll option do not check refrigerant; charge if compressor is operating at less than 100% capacity; digital operation can be disabled by configuring **A1.TY = NO** ***(Configuration→Unit→A1.TY)***.

⚠ CAUTION

Never charge liquid into low-pressure side of system. Do not overcharge. Overcharging results in higher discharge pressure, possible compressor damage, and higher power consumption. During charging or removal of refrigerant, be sure water is continuously circulating through the cooler and condenser (30MPW) to prevent freezing.

⚠ CAUTION

Be careful not to overcharge the system. Overcharging results in higher discharge pressure, possible compressor damage, and higher power consumption.

EVACUATION AND DEHYDRATION — The 30MP015-045 systems use polyol ester (POE) oil, and 30MP050-071 systems use polyvinyl ester (PVE) oil. Because either type of oil can absorb moisture, it is important to minimize the amount of time that the system interior is left exposed to the atmosphere. Minimizing the exposure time of the oil to the atmosphere will minimize the amount of moisture that needs to be removed during evacuation.

Once all of the piping connections are complete, leak test the unit and then pull a deep dehydration vacuum. Connect the vacuum pump to the high flow Schrader valve in the suction line and liquid line. For best results, it is recommended that a vacuum of at least 500 microns (0.5 mm Hg) be obtained. Afterwards, to ensure that no moisture is present in the system, perform a standing vacuum-rise test.

With the unit in deep vacuum (500 microns or less), isolate the vacuum pump from the system. Observe the rate-of-rise of the vacuum in the system. If the vacuum rises by more than 50 microns in a 30-minute time period, then continue the dehydration process. Maintain a vacuum on the system until the standing vacuum requirement is met. This will ensure a dry system.

By following these evacuation and dehydration procedures, the amount of moisture present in the system will be

minimized. It is required that liquid line filter driers be installed between the condenser(s) and the expansion devices to capture any foreign debris and provide additional moisture removal capacity.

LIQUID CHARGING METHOD

For 30MP015-045: Add charge to the unit through the liquid line service valve. Never charge liquid into the low-pressure side of the system.

For 30MP050-071: Add the charge to the unit through the high flow Schrader valve on the filter drier.

1. Close liquid line ball valve (30MPA only).
2. Connect a refrigerant cylinder loosely to the high flow Schrader valve connection on the liquid line. Purge the charging hose and tighten the connections.
3. Open the refrigerant cylinder valve.
4. If the system has been dehydrated and is under vacuum, break the vacuum with refrigerant gas. For R-410A, build up system pressure to 101 psig and 32 F (697 kPa and 0° C). Invert the refrigerant cylinder so that the liquid refrigerant will be charged.
5. a. For complete charge of 30MPW units, follow charging by weight procedure. When charge is nearly full, complete the process by observing the sight glass for clear liquid flow while the unit is operating. *The use of sight glass charging is valid only when unit is operating at full capacity.*

   b. For complete charge of 30MPA units or where refrigerant cylinder cannot be weighed, follow the condenser manufacturer's charging procedure or follow charging by sight glass procedure. *The use of sight glass charging is valid only when unit is operating at full capacity.*
6. a. The 30MPA condenserless units are shipped with a nitrogen holding charge. After installation with the field-supplied system high side, the complete system should be evacuated and charged per the condenser manufacturer's charging procedure or charged until the sight glass is clear (with the unit running at full capacity). To achieve maximum system capacity, add additional charge equal to the difference between the condenser optimal charge and the condenser minimum charge, which can be obtained from the charge data provided in the condenser installation instructions.

   b. To ensure maximum performance of 30MPW units, raise the compressor saturated discharge temperature (SDT) to approximately 100 F (37.8 C) by throttling the condenser water intake. Add charge until there is approximately 9 to 12° F (5.0 to 6.6° C) of system subcooling (SDT minus actual temperature entering the expansion valve).

Check Compressor Oil Level — After adjusting the refrigerant charge, allow each circuit to run fully loaded for 20 minutes. Stop the compressors and check the oil level. Oil level should be $^1/_8$ to $^3/_8$ up on the sight glass.

IMPORTANT: Oil level should only be checked when the compressors are off.

Add oil only if necessary to bring the oil into view in the sight glass. If oil is added, run the circuit for an additional 10 minutes, then stop and check oil level. If the level remains low, check the piping system for proper design for oil return; also, check the system for leaks. If checking the oil level with unit running in part load, let unit run one hour, then run at full load for 10 minutes. If oil does not return to acceptable sight glass levels, check for correct suction piping and line sizing.

Adjust Oil Charge — Although the compressors are factory charged with oil, additional oil is likely required to maintain the oil level in the compressor. Tables 37 and 38 indicate the likely amount required based on the liquid line size and system piping length. Additional lubricant estimate is based on using recommended pipe sizes. Values listed are estimates only. See Add Oil section for Carrier-approved oils. After operating the compressor for a period of time, the oil level should be between $^1/_8$ and $^3/_8$ of the oil sight glass. The compressor oil level should be checked with the compressor off to avoid the sump turbulence when the compressor is running. Oil must be added if the oil level does not meet the requirements.

Table 37 — 60 Hz Additional Lubricant (English)

UNIT SIZE	ADDITIONAL LUBRICANT (FLUID OUNCES) REQUIRED FOR PIPING AND REFRIGERANT							
	Up to 25 ft	25 to 50 ft	50 to 75 ft	75 to 100 ft	100 to 125 ft	125 to 150 ft	150 to 175 ft	175 to 200 ft
30MPA015	0	9	11	12	13	14	15	16
30MPA020	11	12	13	14	21	23	26	28
30MPA030	13	15	17	20	22	24	27	29
30MPA040	27	30	33	36	51	57	63	68
30MPA045	27	30	33	37	52	57	63	69
30MPA050	27	30	34	38	53	59	65	71
30MPA055	27	31	35	39	53	59	65	71
30MPA060	28	32	36	40	54	60	66	72
30MPA065	33	37	41	45	59	65	71	77
30MPA071	39	43	47	51	65	71	77	83

Table 38 — 60 Hz Additional Lubricant (SI)

UNIT SIZE	ADDITIONAL LUBRICANT (ML) REQUIRED FOR PIPING AND REFRIGERANT							
	Up to 7.5 m	7.5 to 15 m	15 to 22.5 m	22.5 to 30 m	30 to 37.5 m	37.5 to 45 m	45 to 52.5 m	52.5 to 60 m
30MPA015	0	262	319	352	384	417	450	482
30MPA020	315	347	380	413	620	688	756	823
30MPA030	372	440	508	575	643	710	778	846
30MPA040	784	881	977	1074	1511	1676	1841	2005
30MPA045	791	888	984	1081	1518	1683	1848	2012
30MPA050	783	898	1014	1129	1546	1722	1897	2073
30MPA055	795	911	1026	1141	1558	1734	1910	2085
30MPA060	825	941	1056	1171	1588	1764	1939	2115
30MPA065	976	1091	1206	1322	1739	1914	2090	2266
30MPA071	1147	1263	1378	1493	1910	2086	2261	2437

Operating Limitations

TEMPERATURES — See Table 39 for 30MP standard temperature limits. The 30MPW050-071 and 30MPA050-071 units use different compressors that require different operating envelopes. The 30MPW050-071 units (standard condensing) use water-cooled optimized compressors, which operate at lower condensing temperatures. The 30MPA050-071 units and 30MPW050-071 heat reclaim units use air-cooled optimized compressors, which allow for higher condensing temperatures.

⚠ CAUTION

Do not operate with cooler leaving chiller water (fluid) temperature (LCWT) below 32 F (0° C) for standard units with proper brine solution, 40 F (4.4 C) for the standard units with fresh water, or below 15 F (–9.4 C) for units factory built for medium temperature brine, or unit damage may occur.

High Cooler Leaving Chilled Water (Fluid) Temperatures (LCWT) — During start-up with cooler the LCWT should not be above approximately 60 F (16 C).

Low Cooler LCWT — For standard units with fresh water, the LCWT must be no lower than 40 F (4.4 C). For standard units with a proper brine solution, the LCWT must be no lower than 32 F (0° C). If the unit is the factory-installed optional medium temperature brine unit, the cooler LCWT can go down to 15 F (–9.4 C).

Table 39 — Temperature Limits for Standard 30MP Units

TEMPERATURE LIMIT	30MPA, 30MPW015-045, 30MPW050-071 HIGH CONDENSING		STANDARD 30MPW050-071	
	F	C	F	C
Maximum Condenser LWT	140	60	120	49
Minimum Condenser EWT	65	18	65	18
Maximum Cooler EWT*	75	23	75	23
Maximum Cooler LWT	60	15	60	15
Minimum Cooler LWT†	40	4	40	4

LEGEND
EWT — Entering Fluid (Water) Temperature
LWT — Leaving Fluid (Water) Temperature

*For sustained operation, EWT should not exceed 85 F (29.4 C).
†Unit requires modification below this temperature.

IMPORTANT: Medium temperature brine duty application (below 32 F [0° C] LCWT) for chiller normally requires factory modification. Contact your Carrier representative for applicable LCWT range for standard water-cooled chiller in a specific application.

VOLTAGE — ALL UNITS

Main Power Supply — Minimum and maximum acceptable supply voltages are listed in the Installation Instructions.

Unbalanced 3-Phase Supply Voltage — Never operate a motor where a phase imbalance between phases is greater than 2%. To determine percent voltage imbalance:

$$\% \text{ Voltage Imbalance} = 100 \times \frac{\text{max voltage deviation from avg voltage}}{\text{average voltage}}$$

The maximum voltage deviation is the largest difference between a voltage measurement across 2 legs and the average across all 3 legs.

Example: Supply voltage is 240-3-60.

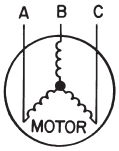

AB = 243 v
BC = 236 v
AC = 238 v

1. Determine average voltage:

$$\text{Average voltage} = \frac{243 + 236 + 238}{3} = \frac{717}{3} = 239$$

2. Determine maximum deviation from average voltage:
   (AB) 243 – 239 = 4 v
   (BC) 239 – 236 = 3 v
   (AC) 239 – 238 = 1 v
   Maximum deviation is 4 v.
3. Determine percent voltage imbalance:

$$\% \text{ Voltage Imbalance} = 100 \times \frac{4}{239} = 1.7\%$$

This voltage imbalance is satisfactory as it is below the maximum allowable of 2%.

IMPORTANT: If the supply voltage phase imbalance is more than 2%, contact your local electric utility company immediately. Do not operate unit until imbalance condition is corrected.

Control Circuit Power — Power for the control circuit is supplied from the main incoming power through a factory-installed control power transformer (TRAN1) for all models. Field wiring connections are made to the LVT.

OPERATION SEQUENCE

The unit is started by putting the ENABLE/OFF/REMOTE CONTROL switch in the ENABLE or REMOTE CONTROL position. When the unit receives a call for cooling (either from the internal control or CCN network command or remote control closure), the unit stages up in capacity to maintain the leaving fluid set point. The first compressor starts $1^1/_2$ to 3 minutes after the call for cooling.

For all units, if temperature reset is being used, the unit controls to a higher leaving-fluid temperature as the building load reduces. If demand limit is used, the unit may temporarily be unable to maintain the desired leaving-fluid temperature because of imposed power limitations.

SERVICE

⚠ WARNING

Electrical shock can cause personal injury and death. Shut off all power to this equipment during service. There may be more than one disconnect switch. Tag all disconnect locations to alert others not to restore power until work is completed.

Service Test — *Both main power and control circuit power must be on.*

The Service Test function should be used to verify proper operation of condenser output, compressors, minimum load

valve solenoid (if installed), cooler pump, EXV, and remote alarm relay. To use the Service Test mode, the Enable/Off/Remote Control switch must be in the OFF position. Use the display keys to enter the mode and display TEST. Press ENTER twice so that OFF flashes. Enter the password if required. Use either arrow key to change the TEST value to the ON position and press ENTER. Move the Enable/Off/Remote Control switch to enable. Press ESCAPE and the ▼ button to enter the OUTS or COMP sub-mode. ENABLE/OFF/REMOTE switch must be set to ENABLE to operate test.

NOTE: Cooler and condenser (30MPW) water flow must be established in order to operate compressor in service test.

Test the condenser output, cooler pump, liquid line solenoid valve (30MPA only), crankcase heater, water valve (accessory), and alarm relay by changing the item values from OFF to ON. These discrete outputs are then turned off if there is no keypad activity for 10 minutes. When testing compressors, the lead compressor must be started first. All compressor outputs can be turned on, but the control will limit the rate by staging one compressor per minute. Minimum load valve can be tested with the compressors on or off. The relays under the COMP mode will stay on for 10 minutes if there is no keypad activity. Compressors will stay on until they are turned off by the operator. The Service Test mode will remain enabled for as long as there is one or more compressors running. All safeties are monitored during this test and will turn a compressor, circuit or the machine off if required. Any other mode or sub-mode can be accessed, viewed, or changed during the TEST mode. The STAT item (***Run Status→VIEW***) will display "0" as long as the Service mode is enabled. The TEST sub-mode value must be changed back to OFF before the chiller can be switched to Enable or Remote control for normal operation.

Charging — For 30MPW units, when service is required, recover the refrigerant from the system.

For 30MPA units when service is required, the compressor and evaporator can be serviced by closing the factory-installed liquid line service valve and field-installed discharge line service valve. After the valves are closed, recover the refrigerant from the system.

Electronic Components

CONTROL COMPONENTS — Unit uses an advanced electronic control system that normally does not require service. For details on controls refer to Controls section.

Access to the controls is through a hinged panel. Inner panels are secured in place and should not be removed unless all power to the chiller is off.

Electronic Expansion Valve (EXV) (30MP050-071 Only) — See Fig. 28 for a cutaway view of the EXV. High-pressure liquid refrigerant enters valve through the top. As refrigerant passes through the orifice, pressure drops and refrigerant changes to a 2-phase condition (liquid and vapor). The electronic expansion valve operates through an electronically controlled activation of a stepper motor. The stepper motor stays in position, unless power pulses initiate the two discrete sets of motor stator windings for rotation in either direction. The direction depends on the phase relationship of the power pulses.

As the stepper motor rotates, its motion is transferred to linear movement by a lead screw. Refrigerant flow is modulated by either opening or closing the port. The valve includes a positive shut-off when closed.

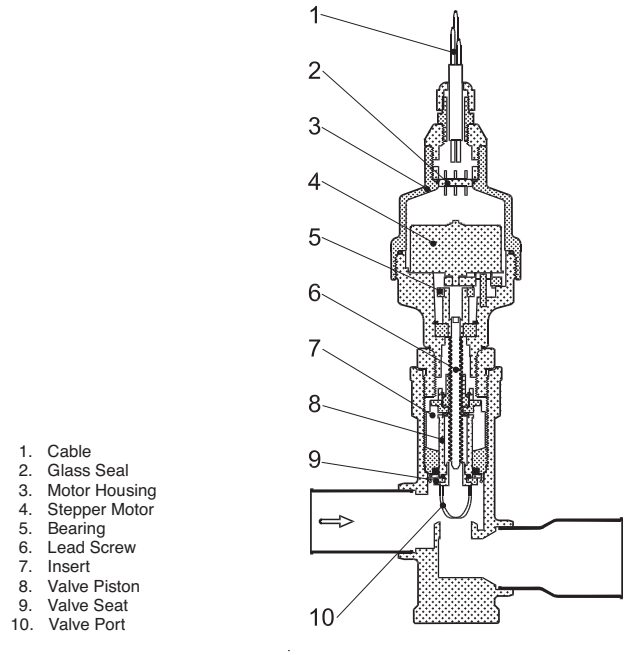

Fig. 28 — Cutaway View of the Electronic Expansion Valve (Sizes 050-071)

Table 40 shows the number of steps for the EXV. The EXV motor moves at 150 steps per second. Commanding the valve to either 0% or 100% will add extra steps to the move, to ensure the value is open or closed completely.

Table 40 — EXV Steps

UNIT SIZE 30MP	EXV STEPS
050-071	3690

The EXV board controls the valve. Each circuit has a thermistor located in a well in the suction manifold before the compressor. Suction pressure as measured by the suction pressure transducer is converted to a saturated suction temperature. The thermistor measures the temperature of the superheated gas entering the compressor and the pressure transducer determines the saturated temperature of suction gas. The difference between the temperature of the superheated gas and the saturated suction temperature is the superheat. The EXV board controls the position of the electronic expansion valve stepper motor to maintain superheat set point.

The MBB controls the superheat leaving cooler to approximately 9° F (5° C). Because EXV status is communicated to the main base board (MBB) and is controlled by the EXV boards, it is possible to track the valve position. The unit is then protected against loss of charge and a faulty valve. Just prior to compressor start, the EXV will open. At low ambient temperatures the EXV is closed at start up. After initialization period, valve position is tracked by the EXV board by constantly monitoring the amount of valve movement.

The EXV is also used to limit cooler saturated suction temperature to 50 F (10 C). This makes it possible for the chiller to start at higher cooler fluid temperatures without overloading the compressor. This is commonly referred to as MOP (maximum operating pressure).

If it appears that the EXV module is not properly controlling circuit operation to maintain correct superheat, there are a number of checks that can be made using test functions and initialization features built into the microprocessor control. See the EXV Troubleshooting Procedure section to test EXVs.

EXV Troubleshooting Procedure — Follow steps below to diagnose and correct EXV problems.

Check EXV motor operation first. Switch the Enable/Off/Remote Control (EOR) switch to the Off position. Press ESCAPE on the scrolling marquee until the display is blank or on Navigator™ display until 'Select a menu item' appears on the display. Use the arrow keys to select the Service Test mode. Press ENTER. The display will be:

> TEST OFF
OUTS
COMP

Press ENTER (password entry may be required) and use ▲ to change OFF to ON. Switch the EOR switch to Enable. The Service Test mode is now enabled. Move the pointer down to the OUTS sub-mode and press ENTER. Move the pointer to item ***EXV.A***. Press ENTER and the valve position will flash. Use ▲ to select 100% valve position (hold ▲ for quick movement) and press ENTER.

The technician should be able to feel the actuator moving by placing a hand on the EXV. A sight glass is located on the valve body to verify that the actuator is moving. A hard knocking should be felt from the actuator when it reaches the top of its stroke (can be heard if surroundings are relatively quiet). Press ENTER again twice if necessary to confirm this. To close the valve, press ENTER, select 0% with ▼ and press ENTER. The actuator should knock when it reaches the bottom of its stroke. If it is believed that the valve is not working properly, continue with the checkout procedure below.

Check the EXV output signals at appropriate terminals on the EXV Board (see Fig. 29). Do not disconnect EXV connector with power applied to the board. Damage to the board may result if disconnected while under power. Connect positive test lead to EXV-J6 terminal 3. Set meter to approximately 20 vdc. Using the Service Test procedure above, move the valve output under test to 100%. DO NOT short meter leads together or connect pin 3 to any other pin as board damage will occur.

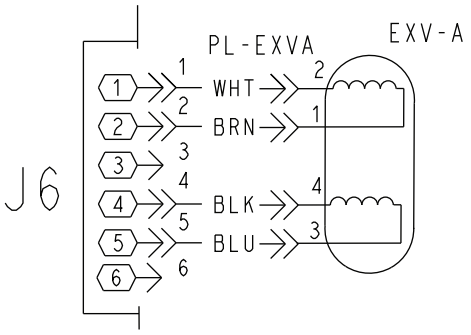

Fig. 29 — 30MP050-071 EXV Cable Connections to EXV Module

⚠ CAUTION

Do not disconnect EXV connector with power applied to the board. Damage to the board may result if disconnected while under power. DO NOT short meter leads together or connect pin 3 to any other pin as board damage will occur.

During the next several seconds, carefully connect the negative test lead to pins 1,2,4 and 5 in succession (plug J6). Digital voltmeters will average this signal and display approximately 6 vdc. If it remains constant at a voltage other than 6 vdc or shows 0 volts, remove the connector to the valve and recheck.

Press ENTER and select 0% to close the valve. Check the 4-position DIP switch on the board (all switches should be set to On). If a problem still exists, replace the EXV board. If the reading is correct, the expansion valve and EXV wiring should be checked.

1. Check color coding and wire connections. Make sure they are connected to the correct terminals at the EXV board and EXV plug and that the cables are not crossed.
2. Check for continuity and tight connection at all pin terminals.
3. If the motor fails to operate properly, check the resistance of each motor phase. Remove the EXV Board J6 connector. Check the resistance of the two windings. Resistance between pins 1 and 2 for one winding or between pins 4 and 5 for the other winding should be approximately 52 ± 5.2 ohms. Differences of more than 10% between windings indicate a defective motor. Resistance between any lead and ground should be infinite or "open." Any resistance reading will indicate a shorted winding and the valve will need to be replaced.

FIELD SERVICING INSTRUCTIONS — See Fig. 28 for a cutaway view of the EXV. Motor kits for the EXV valve are available as replacement parts.

EXV VALVE REPLACEMENT — To replace the valve, perform the following procedure:

1. Be sure the refrigerant has been recovered from the circuit.
2. Disconnect the EXV cable from the EXV.
3. The valve may be replaced by cutting the piping. A tubing cutter must be used to prevent creating contaminants in the piping.
4. The EXVs have copper connections and any brazing alloy can be used to install the valve. During installation the torch flame should be directed away from the valve body and cable. The valve body should be wrapped with a wet cloth during the brazing operation. Be sure to use a nitrogen purge while brazing the valve in place.
5. Check for refrigerant leaks.
6. Once the valve body has cooled, reconnect the EXV cable. Care should be taken to ensure engagement of the alignment key.
7. Check the operation of the valve using the EXV Troubleshooting Procedure on this page.

VALVE MOTOR REPLACEMENT

IMPORTANT: Obtain replacement gasket before opening EXV. Do not re-use gaskets.

Perform the following procedure to replace the EXV motor:

1. Be sure the refrigerant has been recovered from the circuit.
2. Use Service Test to open the EXV to 100%. This will retract the piston fully.
3. Remove power from the EXV board and then disconnect the EXV Cable from the EXV.
4. Using a wrench and back-up wrench, remove the motor assembly from the EXV body. Be sure to place the back-up wrench on the adapter to remove the motor as shown in Fig. 30.
5. To install the motor, be sure to use a new gasket.
6. Manually depress the valve piston before installing the motor assembly. This will allow for the lead screw to engage the piston as the motor is installed.

7. Lightly oil the threads and gasket on the new motor. Carefully seat the motor on the valve body. Using a wrench and back-up wrench as described above, tighten the motor assembly as follows: Tighten the motor to 36 ft-lb (50 N-m) and then tighten an additional 30 degrees as indicated in Fig. 30.
8. After the motor is tightened, the cable should be replaced on the valve. Care should be taken to ensure engagement of the alignment key. Pressurize the system and check for leaks.
9. Reapply control power and test the operation using Service Test operation listed above.

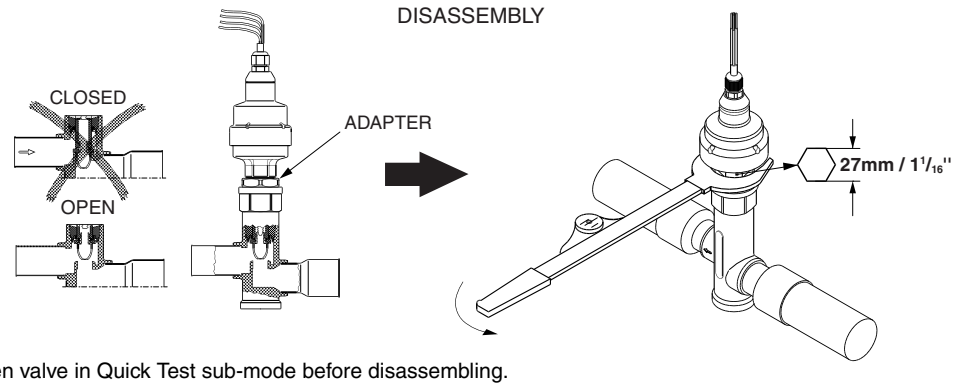

NOTE: Open valve in Quick Test sub-mode before disassembling.

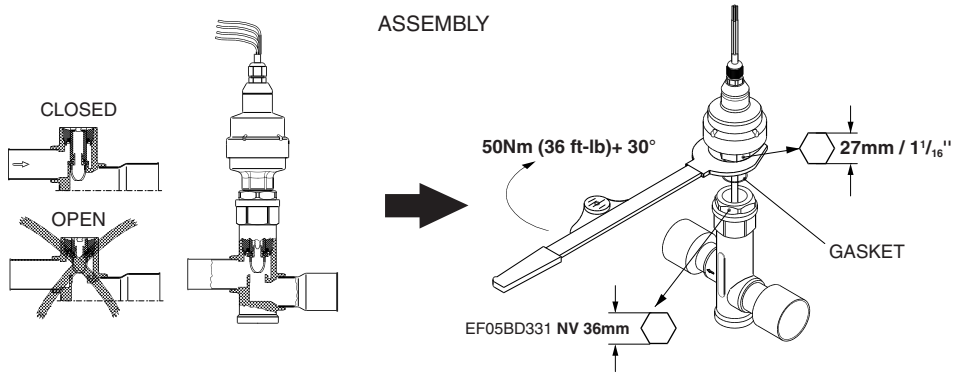

NOTES:
1. Push down on valve piston to close valve before assembling.
2. After valve is assembled close valve in Quick Test sub-mode or cycle power before opening service valve.

Fig. 30 — Disassembly and Assembly of EXV Motor (30MP050-071)

Compressor Replacement — All models contain scroll compressors and have two or three compressors. A compressor is most easily removed from the side of the unit or above, depending on where clearance space was allowed during unit installation. See Fig. 31.

Remove the junction box cover bolts and disconnect the compressor power and crankcase heater connections. Remove the cable from the compressor junction box. Remove the connections from the high-pressure switch. Remove the crankcase heater. Knock the same holes out of the new compressor junction box and install the cable connectors from the old compressor.

The compressors are bolted to rails, which are in turn bolted to the unit basepan for all sizes. Remove the 4 bolts holding the compressor to the rail on the basepan. Save the mounting hardware for use with the new compressor. Carefully cut the compressor suction and discharge lines with a tubing cutter as close to the compressor as feasible. Remove high-pressure switch and pressure transducer(s) if required for compressor removal. Lift one corner of the compressor at a time and remove all the steel spacers. Remove the old compressor from the unit.

Slide the new compressor in place on the rails. Lifting one side of the compressor at a time, replace all of the compressor mounting hardware. Using new tubing as required, reconnect compressor suction and discharge lines. Using hardware saved, reinstall the mounting bolts and washers through the compressor feet. Using proper techniques, braze suction and discharge lines and check for leaks. Reconnect oil equalization line.

Re-install the crankcase heater. Reconnect the compressor power connections and high-pressure switch wiring as on the old compressor. Refer to Fig. 31. Following the installation of the new compressor, tighten all hardware to the following specifications. (See Tables 41 and 42.)

Table 41 — Unit Torque Specification, 30MP015-045

FASTENER	RECOMMENDED TORQUE
Compressor Mounting Bolts	7 to 10 ft-lb (9.5 to 13.5 N-m)
Compressor Power Connections	2 to 2.33 ft-lb (2.7 to 3.16 N-m)
Compressor Ground Terminal Connections	1.2 to 1.5 ft-lb (1.6 to 2.0 N-m)

Table 42 — Unit Torque Specification, 30MP050-071

FASTENER	RECOMMENDED TORQUE
Compressor Mounting Bolts	7 to 10 ft-lb (9.5 to 13.5 N-m)
Compressor Power Connections	3.33 to 3.75 ft-lb (4.5 to 5.1 N-m)
Compressor Ground Terminal Connections	3.33 to 3.75 ft-lb (4.5 to 5.1 N-m)

30MP Cooler and 30MPW Condenser

BRAZED-PLATE COOLER AND CONDENSER HEAT EXCHANGER REPLACEMENT — Brazed-plate heat exchangers cannot be repaired if they develop a leak. If a leak (refrigerant or water) develops, the heat exchanger **must be** replaced. To replace a brazed plate heat exchanger:

1. Disconnect the liquid-in and liquid-out connections at the heat exchanger.
2. Check that the replacement heat exchanger is the same as the original heat exchanger. For the condensers, compare part numbers on the heat exchangers. For the coolers, insulation covers the manufacturer's part number. Make sure the depths of the replacement and original cooler heat exchangers are the same.
3. Recover the refrigerant from the system, and unsolder the refrigerant-in and refrigerant-out connections.
4. Remove the four nuts holding the heat exchanger to the brackets. Save the nuts.
5. Install the replacement heat exchanger in the unit and attach to the bracket using the four nuts removed in Step 4. For sizes 015 and 020, torque is 7 to 10 ft-lb. For sizes 030-045, torque is 35 to 50 ft-lb. For sizes 050-071, torque is 10 to 11 ft-lb.
6. *Carefully* braze the refrigerant lines to the connections on the heat exchanger. Lines should be soldered using silver as the soldering material with a minimum of 45% silver. Keep the temperature below 1472 F (800 C) under normal soldering conditions (no vacuum) to prevent the copper solder of the brazed plate heat exchanger from changing its structure. Failure to do so can result in internal or external leakage at the connections which cannot be repaired.
7. For coolers, ensure that the original size tubing is used ($^1/_2$ in. for sizes 015 and 020, $^5/_8$ in. for sizes 030-045, and $1^3/_8$ in. for sizes 050-071) between the TXV/EXV or expansion device and the cooler. The TXV/EXV or expansion device must be located within 1 ft of the heat exchanger, with no bends between the TXV/EXV or expansion device outlet and the cooler inlet.
8. Reconnect the water/brine lines.
9. Dehydrate and recharge the unit. Check for leaks.

BRAZED-PLATE COOLER AND CONDENSER HEAT EXCHANGER CLEANING — Brazed-plate heat exchangers must be cleaned chemically. A professional cleaning service skilled in chemical cleaning should be used. Use a weak acid (5% phosphoric acid, or if the heat exchanger is cleaned frequently, 5% oxalic acid). Pump the cleaning solution through the exchanger, preferably in a backflush mode. After cleaning, rinse with large amounts of fresh water to dispose of all the acid. Cleaning materials must be disposed of properly.

The strainers in front of the water/brine inlets of the heat exchangers should be cleaned periodically, depending on condition of the chiller water/brine.

Water Treatment — Untreated or improperly treated water may result in corrosion, scaling, erosion, or algae. The services of a qualified water treatment specialist should be obtained to develop and monitor a treatment program. See water system cleaning section for water quality characteristics and limitations in the unit installation instructions.

⚠ CAUTION

Water must be within design flow limits, clean and treated to ensure proper machine performance and reduce the potential of tubing damage due to corrosion, scaling, erosion, and algae. Carrier assumes no responsibility for chiller or condenser damage resulting from untreated or improperly treated water.

Oil Charge

⚠ CAUTION

The compressor in a Puron® refrigerant (R-410A) system uses a polyol ester (POE) oil or poly vinyl ester (PVE) oil. This is extremely hygroscopic, meaning it absorbs water readily. Take all necessary precautions to avoid exposure of the oil to the atmosphere. Failure to do so could result in possible equipment damage.

Puron refrigerant systems use a polyol ester (POE) oil for 30MP015-045 units. The 30MP050-071 units use polyvinyl ester (PVE) oil. See Table 43.

Table 43 — Compressor Oils

30MP UNIT SIZE	OIL
015-045	POE 3MAF
050-071	PVE FVC32D

Use only Carrier approved compressor oil. Oil should be visible in compressor oil sight glass. An acceptable oil level is from $^1/_8$ to $^3/_8$ of sight glass. All compressors must be off when checking oil level. Recommended oil level adjustment method is as follows:

ADD OIL — Additional oil may be required in 30MPA units. Tables 44 and 45 provide an estimate of the amount of oil required, based on the line length and the recommended pipe sizes. The actual circuit oil charge will depend on the application piping. The guidelines listed are estimates and will likely need adjusting depending on the number of traps in the application and the pipe sizes utilized.

No attempt should be made to increase the oil level in the sight-glass above the $^3/_4$ full level. A high oil level is not sustainable in the compressor and the extra oil will be pumped out into the system causing a reduction in system efficiency and a higher-than-normal oil circulation rate.

Add oil to suction line Schrader valve on tandem compressors sets and the compressor Schrader on the trios. When oil can be seen at the bottom of the sight glass, add oil in 5 oz increments which is approximately $^1/_8$ in oil level. Run all compressors for 20 minutes then shut off to check oil level. Repeat procedure until acceptable oil level is present.

NOTE: Use only Carrier approved compressor oil. Approved sources for 30MP015-045 units are:

Totaline . . . . . 3MAF POE, P903-1601
Mobil. . . . . .EAL Arctic 32-3MA
Uniqema RL32-3MAF

The approved source for 30MP050-071 units is:

Totaline FVC32D, P903-2501

Do not reuse oil that has been drained out, or oil that has been exposed to atmosphere.

Check Refrigerant Feed Components

FILTER DRIER — The function of the filter drier is to maintain a clean, dry system. The moisture indicator (described below) indicates any need to change the filter drier. The filter drier is a sealed-type drier for 30MP015-045 and removeable core for 30MP050-071. When the drier needs to be changed, the entire filter drier must be replaced for 30MP015-045 units.

MOISTURE-LIQUID INDICATOR — The indicator is located immediately ahead of the TXV to provide an indication of the refrigerant moisture content. It also provides a sight glass for refrigerant liquid. Clear flow of liquid refrigerant (*at full unit loading*) indicates sufficient charge in the system. Bubbles in the sight glass (*at full unit loading*) indicate an undercharged system or the presence of noncondensables. Moisture in the system, measured in parts per million (ppm), changes the color of the indicator as follows:

Green (safe) —Moisture is below 75 ppm
Yellow-Green (caution) — 75 to 150 ppm
Yellow (wet) — above 150 ppm

The unit must be in operation at least 12 hours before the moisture indicator gives an accurate reading, and must be in contact with *liquid* refrigerant. At the first sign of moisture in the system, change the corresponding filter drier.

THERMOSTATIC EXPANSION VALVE (TXV) (30MP015-045 ONLY) — The TXV controls the flow of liquid refrigerant to the cooler by maintaining constant superheat of vapor leaving the cooler. The valve is activated by a temperature-sensing bulb strapped to the suction line.

The valve(s) is factory-set to maintain between 8° and 10° F (4.4° and 5.6° C) of superheat leaving the cooler. Check the superheat during operation after conditions have stabilized. If necessary, adjust the superheat to prevent refrigerant floodback to the compressor.

Table 44 — Additional Lubrication Recommendation — English

30MPA UNIT SIZE	CONDENSER 09DP	ADDITIONAL LUBRICANT (FLUID OUNCES) REQUIRED BASED ON ACTUAL REFRIGERANT LINE LENGTH							
		UP TO 25 ft	25-50 ft	50-75 ft	75-100 ft	100-125 ft	125-150 ft	150-175 ft	175-200 ft
15	S018	0	9	11	12	13	14	15	16
20	S020	11	12	13	14	21	23	26	28
30	S030	13	15	17	20	22	24	27	29
40	M040	27	30	33	36	51	57	63	68
45	M050	27	30	33	37	52	57	63	69
50	M050	17	20	22	26	29	32	36	38
55	M055	28	21	23	27	30	33	37	40
60	M060	19	22	25	30	32	35	40	43
65	M065	20	23	26	30	33	36	41	44
71	M075	23	26	30	35	38	42	47	50

NOTE: This chart is based on recommended pipe sizes.

Table 45 — Additional Lubrication Recommendation — SI

30MPA UNIT SIZE	CONDENSER 09DP	ADDITIONAL LUBRICANT (mL) REQUIRED BASED ON ACTUAL REFRIGERANT LINE LENGTH							
		UP TO 7.5 M	7.5-15 M	15-22.5 M	22.5-30 M	30-37.5 M	37.5-45 M	45-52.5 M	52.5-60 M
15	**S018**	0	262	319	352	384	417	450	482
20	**S020**	315	347	380	413	620	688	756	823
30	**S030**	372	440	508	575	643	710	778	846
40	**M040**	784	881	977	1074	1511	1676	1841	2005
45	**M050**	791	888	984	1081	1518	1683	1848	2012
50	**M050**	509	587	666	783	862	940	1057	1136
55	**M055**	527	608	689	811	892	973	1094	1175
60	**M060**	568	656	743	874	962	1049	1180	1268
65	**M065**	584	674	763	898	988	1078	1212	1302
71	**M075**	669	772	875	1029	1132	1235	1389	1492

NOTE: This chart is based on recommended pipe sizes.

LEGEND

CWFS — Chilled Water Flow Switch
DPT — Discharge Pressure Transducer
EWT — Entering Water Thermistor
HPS — High Pressure Switch
LWT — Leaving Water Thermistor
RGT — Return Gas Thermistor (Optional)
SPT — Suction Pressure Transducer

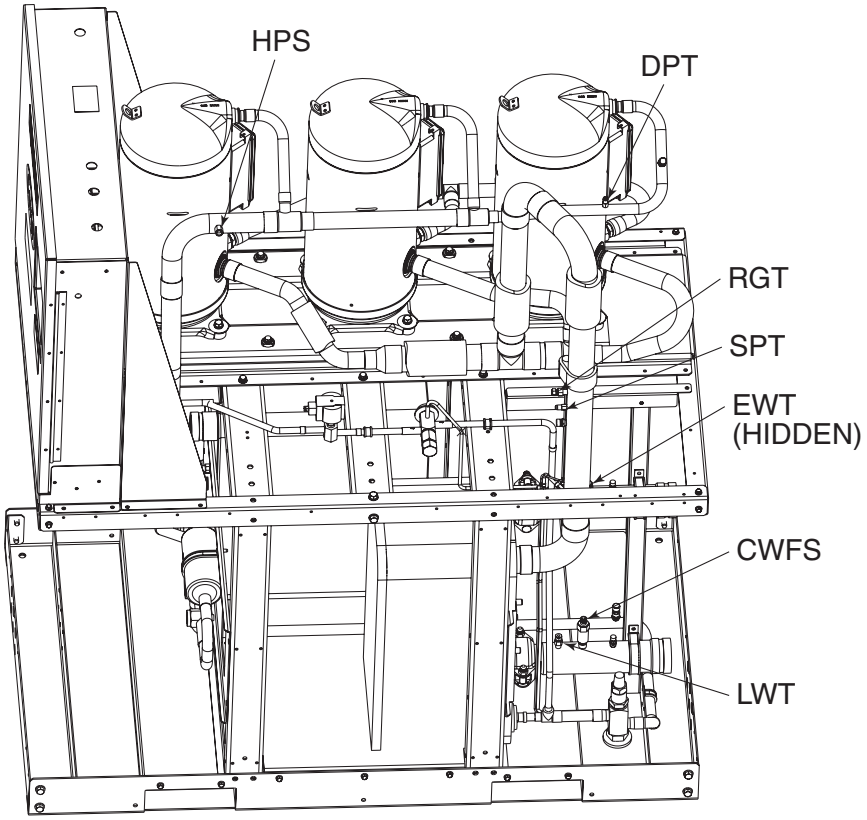

Fig. 31 — Compressor Location — 30MP015-045 Units (30MPW045 Unit Shown)

MINIMUM LOAD VALVE — On units equipped with the factory-installed hot gas bypass option, a solenoid valve and discharge bypass valve (minimum load valve) are located between the discharge line and the cooler entering-refrigerant line. The MBB cycles the solenoid to perform minimum load valve function and the discharge bypass valve modulates to the suction pressure set point of the valve. The bypass valve has an adjustable opening setting between 95 to 115 psig (655 to 793 kPa). The factory setting is 105 psig (724 kPa).

The amount of capacity reduction achieved by the minimum load valve is not adjustable. The total unit capacity with the minimum load valve is shown in Table 14.

PRESSURE RELIEF DEVICES — All units have one pressure relief device per circuit located in the liquid line which relieves at 210 F (100 C).

The 30MPW unit does not have a condenser pressure relief valve because the brazed-plate condenser is not considered a pressure vessel, as defined in ANSI/ASHRAE 15 (American National Standards Institute/American Society of Heating, Refrigerating, and Air-Conditioning Engineers) safety code requirements.

For 30MPA condenserless units, pressure relief devices designed to relieve at the pressure determined in local codes, must be field-supplied and installed in the discharge line piping in accordance with ANSI/ASHRAE 15 safety code requirements. Additional pressure relief valves, properly selected, must be field-supplied and installed to protect high side equipment and may be required by applicable codes.

Most codes require that a relief valve be vented directly to the outdoors. *The vent line must not be smaller than the relief valve outlet.* Consult ANSI/ASHRAE 15 for detailed information concerning layout and sizing of relief vent lines.

Check Unit Safeties

HIGH-PRESSURE SWITCH — A high-pressure switch is provided to protect the circuit and refrigeration system from unsafe high pressure conditions. For 30MP050-071, two

different high pressure switches are used, depending on unit configuration. See Table 46 for high-pressure switch settings.

The high-pressure switch is mounted in the discharge line of the circuit. If an unsafe, high-pressure condition should exist, the switch opens and shuts off the unit. The MBB senses the HPS feedback signal and generates an appropriate alarm. The MBB prevents the circuit from restarting until the alert condition is reset. The switch should open at the pressure corresponding to the appropriate switch setting as shown in Table 46.

Table 46 — Factory Settings, High-Pressure Switch (Fixed)

UNIT	CUTOUT		CUT-IN		PART NUMBER
	Psig	kPa	Psig	kPa	
All 30MP015-045; 30MPA050-071, 30MPW050-071 High Condensing	650	4482	500	3447	HK02ZZ001
30MPW050-071	558	3848	435	3000	HK02ZZ003

Clear the alarm using the scrolling marquee display. The unit should restart after the compressor anti-short-cycle delay, built into the unit control module, expires.

PRESSURE TRANSDUCERS — Each unit is equipped with a suction and discharge pressure transducer. These inputs to the MBB are not only used to monitor the status of the unit, but also to maintain operation of the chiller within the compressor manufacturer's specified limits. The input to the MBB from the suction pressure transducer is also used to protect the compressor from operating at low pressure conditions. If suction return gas thermistors are installed, then additional low superheat conditions are detected. In some cases, the unit may not be able to run at full capacity. The control module will automatically reduce the capacity of a circuit as needed to maintain specified maximum/minimum operating pressures.

COOLER FREEZE-UP PROTECTION

⚠ WARNING

On medium temperature brine units, the anti-freeze solution must be properly mixed to prevent freezing at a temperature of at least 15 F (8.3 C) below the leaving-fluid temperature set point. Failure to provide the proper anti-freeze solution mixture is considered abuse and may impair or otherwise negatively impact the Carrier warranty.

The main base board (MBB) monitors cooler leaving fluid temperature at all times. The MBB will rapidly remove stages of capacity as necessary to prevent freezing conditions due to the rapid loss of load or low cooler fluid flow.

When the cooler is exposed to lower temperatures (40 F [4.4 C] or below), freeze-up protection is required using inhibited ethylene or propylene glycol.

Thermistors — Electronic control uses up to five 5,000-ohm thermistors to sense temperatures used to control operation of the chiller. Thermistors EWT, LWT, RGT.A, CNDE, CNDL, and OAT are identical in their temperature and voltage drop performance. The SPT space temperature thermistor has a 10,000-ohm input channel and it has a different set of temperature vs. resistance and voltage drop performance. Resistance values at various temperatures are listed in Tables 47-51. For dual chiller operation, a dual chiller sensor is required which is a 5,000-ohm thermistor.

REPLACING THERMISTORS (EWT, LWT, RGT, CNDE, CNDL) — Add a small amount of thermal conductive grease to the thermistor well and end of probe. For all probes, tighten the retaining nut ¼ turn past finger tight. See Fig. 32.

THERMISTOR/TEMPERATURE SENSOR CHECK — A high quality digital volt-ohmmeter is required to perform this check.

1. Connect the digital voltmeter across the appropriate thermistor terminals at the J8 terminal strip on the main base board (see Fig. 33).
2. Using the voltage reading obtained, read the sensor temperature from Tables 47-51.
3. To check thermistor accuracy, measure temperature at probe location with an accurate thermocouple-type temperature measuring instrument. Insulate thermocouple to avoid ambient temperatures from influencing reading. Temperature measured by thermocouple and temperature determined from thermistor voltage reading should be close, ± 5° F (3° C) if care was taken in applying thermocouple and taking readings.

If a more accurate check is required, unit must be shut down and thermistor removed and checked at a known temperature (freezing point or boiling point of water) using either voltage drop measured across thermistor at the J8 terminal, by determining the resistance with chiller shut down and thermistor disconnected from J8. Compare the values determined with the value read by the control in the Temperatures mode using the scrolling marquee display.

Pressure Transducers — The suction and discharge transducers are different part numbers and can be distinguished by the color of the transducer body, suction (yellow) and discharge (red). No pressure transducer calibration is required. The transducers operate on a 5 vdc supply, which is generated by the main base board (MBB). See Fig. 33 for transducer connections to the J8 connector on the MBB.

TROUBLESHOOTING — If a transducer is suspected of being faulty, first check supply voltage to the transducer. Supply voltage should be 5 vdc ± 0.2 v. If supply voltage is correct, compare pressure reading displayed on the scrolling marquee display module against pressure shown on a calibrated pressure gage. Pressure readings should be within ± 15 psig. If the two readings are not reasonably close, replace the pressure transducer.

Chilled Water Flow Switch — A factory-installed flow switch is installed in the leaving fluid piping for all units. This is a thermal-dispersion flow switch with no field adjustments. The switch is set for approximately 0.5 ft/sec of flow. The sensor tip houses two thermistors and a heater element. One thermistor is located in the sensor tip, closest to the flowing fluid. See Fig. 34. This thermistor is used to detect changes in the flow velocity of the liquid. The second thermistor is bonded to the cylindrical wall and is affected only by changes in the temperature of the liquid. The thermistors are positioned to be in close contact with the wall of the sensor probe and, at the same time, to be kept separated from each other within the confines of the probe.

In order to sense flow, it is necessary to heat one of the thermistors in the probe. When power is applied, the tip of the probe is heated. As the fluid starts to flow, heat will be carried away from the sensor tip. Cooling of the first thermistor is a function of how fast heat is conducted away by the flowing liquid.

The difference in temperature between the two thermistors provides a measurement of fluid velocity past the sensor probe. When fluid velocity is high, more heat will be carried away from the heated thermistor and the temperature differential will be small. As fluid velocity decreases, less heat will be taken from the heated thermistor and there will be an increase in temperature differential.

When unit flow rate is above the minimum flow rate, then the output is switched on, sending 24 vac to the MBB to prove flow has been established.

For recommended maintenance, check the flow switch operation. If operation is erratic check the sensor tip for build-up every 6 months. Clean the tip with a soft cloth. If necessary, build-up (e.g., lime) can be removed with a common vinegar cleansing agent.

The flow sensor cable is provided with (3) LEDs that indicate if 24 vac power is present and also status of the switch contacts. The LEDs are as follows:

- Green LED ON – 24 vac present
- One Yellow LED ON – Flow sensor switch OPEN
- Two Yellow LED ON – Flow sensor switch CLOSED

If nuisance trips of the sensor are occurring, follow the steps below to correct the situation:

1. Check to confirm that the field-installed strainer is clean. Use the blow-down valve provided or remove the screen and clean it. For the case of VFD controlled pumps, ensure that the minimum speed setting has not been changed.
2. Measure the pressure drop across the cooler and compare this to the system requirements.
3. Verify that cable connections at the switch and at the terminal block are secure.
4. Check for wrong pump motor rotation. Pump must rotate clockwise when viewed from motor end of pump.

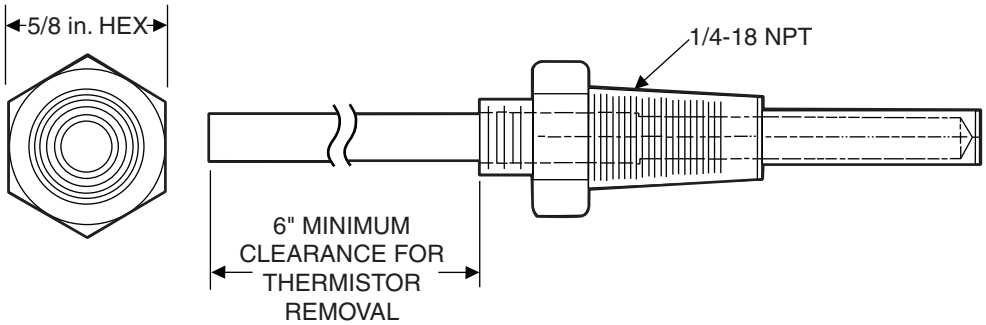

Fig. 32 — Thermistor Well

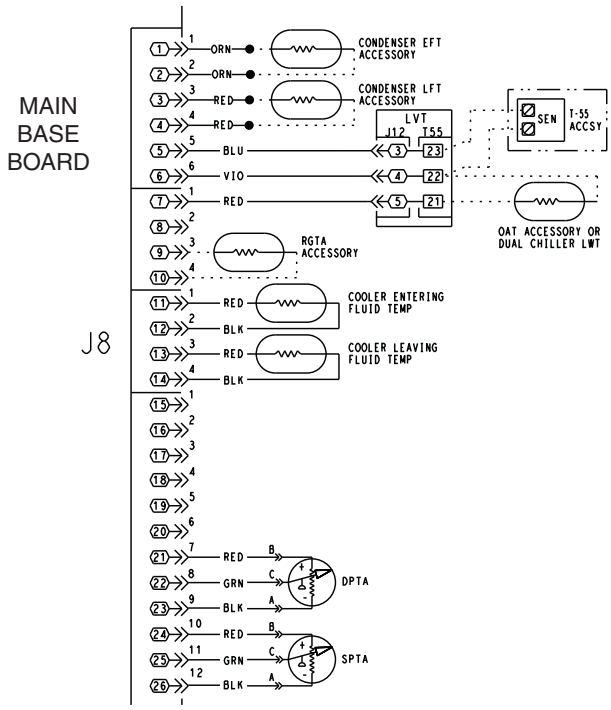

LEGEND

ACCSY — Accessory
DPT — Discharge Pressure Transducer
EFT — Entering Fluid Temperature
LFT — Leaving Fluid Temperature
LWT — Leaving Water Temperature Sensor
LVT — Low Voltage Terminal
OAT — Outdoor Air Temperature Sensor
RGT — Return Gas Temperature Sensor
SEN — Sensor Terminal Block
SPT — Space Temperature Sensor

Fig. 33 — Thermistor Connections to Main Base Board, J8 Connector

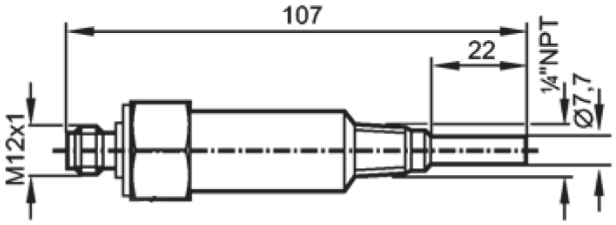

NOTE: Dimensions are in millimeters.

Fig. 34 — Chilled Water Flow Switch

Table 47 — 5K Thermistor Temperatures (°F) vs. Resistance/Voltage Drop (Voltage Drop for EWT, LWT, RGT, CNDE, CNDL, Dual Chiller, and OAT)

TEMP (F)	VOLTAGE DROP (V)	RESISTANCE (Ohms)
–25	3.699	98,010
–24	3.689	94,707
–23	3.679	91,522
–22	3.668	88,449
–21	3.658	85,486
–20	3.647	82,627
–19	3.636	79,871
–18	3.624	77,212
–17	3.613	74,648
–16	3.601	72,175
–15	3.588	69,790
–14	3.576	67,490
–13	3.563	65,272
–12	3.550	63,133
–11	3.536	61,070
–10	3.523	59,081
–9	3.509	57,162
–8	3.494	55,311
–7	3.480	53,526
–6	3.465	51,804
–5	3.450	50,143
–4	3.434	48,541
–3	3.418	46,996
–2	3.402	45,505
–1	3.386	44,066
0	3.369	42,679
1	3.352	41,339
2	3.335	40,047
3	3.317	38,800
4	3.299	37,596
5	3.281	36,435
6	3.262	35,313
7	3.243	34,231
8	3.224	33,185
9	3.205	32,176
10	3.185	31,202
11	3.165	30,260
12	3.145	29,351
13	3.124	28,473
14	3.103	27,624
15	3.082	26,804
16	3.060	26,011
17	3.038	25,245
18	3.016	24,505
19	2.994	23,789
20	2.972	23,096
21	2.949	22,427
22	2.926	21,779
23	2.903	21,153
24	2.879	20,547
25	2.856	19,960
26	2.832	19,393
27	2.808	18,843
28	2.784	18,311
29	2.759	17,796
30	2.735	17,297
31	2.710	16,814
32	2.685	16,346
33	2.660	15,892
34	2.634	15,453
35	2.609	15,027
36	2.583	14,614
37	2.558	14,214
38	2.532	13,826
39	2.506	13,449
40	2.480	13,084
41	2.454	12,730
42	2.428	12,387
43	2.402	12,053
44	2.376	11,730
45	2.349	11,416
46	2.323	11,112
47	2.296	10,816
48	2.270	10,529
49	2.244	10,250
50	2.217	9,979
51	2.191	9,717
52	2.165	9,461
53	2.138	9,213
54	2.112	8,973
55	2.086	8,739
56	2.060	8,511
57	2.034	8,291
58	2.008	8,076
59	1.982	7,686
60	1.956	7,665
61	1.930	7,468
62	1.905	7,277
63	1.879	7,091
64	1.854	6,911
65	1.829	6,735
66	1.804	6,564
67	1.779	6,399
68	1.754	6,238
69	1.729	6,081
70	1.705	5,929
71	1.681	5,781
72	1.656	5,637
73	1.632	5,497
74	1.609	5,361
75	1.585	5,229
76	1.562	5,101
77	1.538	4,976
78	1.516	4,855
79	1.493	4,737
80	1.470	4,622
81	1.448	4,511
82	1.426	4,403
83	1.404	4,298
84	1.382	4,196
85	1.361	4,096
86	1.340	4,000
87	1.319	3,906
88	1.298	3,814
89	1.278	3,726
90	1.257	3,640
91	1.237	3,556
92	1.217	3,474
93	1.198	3,395
94	1.179	3,318
95	1.160	3,243
96	1.141	3,170
97	1.122	3,099
98	1.104	3,031
99	1.086	2,964
100	1.068	2,898
101	1.051	2,835
102	1.033	2,773
103	1.016	2,713
104	0.999	2,655
105	0.983	2,597
106	0.966	2,542
107	0.950	2,488
108	0.934	2,436
109	0.918	2,385
110	0.903	2,335
111	0.888	2,286
112	0.873	2,239
113	0.858	2,192
114	0.843	2,147
115	0.829	2,103
116	0.815	2,060
117	0.801	2,018
118	0.787	1,977
119	0.774	1,937
120	0.761	1,898
121	0.748	1,860
122	0.735	1,822
123	0.723	1,786
124	0.710	1,750
125	0.698	1,715
126	0.686	1,680
127	0.674	1,647
128	0.663	1,614
129	0.651	1,582
130	0.640	1,550
131	0.629	1,519
132	0.618	1,489
133	0.608	1,459
134	0.597	1,430
135	0.587	1,401
136	0.577	1,373
137	0.567	1,345
138	0.557	1,318
139	0.548	1,291
140	0.538	1,265
141	0.529	1,240
142	0.520	1,214
143	0.511	1,190
144	0.502	1,165
145	0.494	1,141
146	0.485	1,118
147	0.477	1,095
148	0.469	1,072
149	0.461	1,050
150	0.453	1,029
151	0.445	1,007
152	0.438	986
153	0.430	965
154	0.423	945
155	0.416	925
156	0.408	906
157	0.402	887
158	0.395	868
159	0.388	850
160	0.381	832
161	0.375	815
162	0.369	798
163	0.362	782
164	0.356	765
165	0.350	750
166	0.344	734
167	0.339	719
168	0.333	705
169	0.327	690
170	0.322	677
171	0.317	663
172	0.311	650
173	0.306	638
174	0.301	626
175	0.296	614
176	0.291	602
177	0.286	591
178	0.282	581
179	0.277	570
180	0.272	561
181	0.268	551
182	0.264	542
183	0.259	533
184	0.255	524
185	0.251	516
186	0.247	508
187	0.243	501
188	0.239	494
189	0.235	487
190	0.231	480
191	0.228	473
192	0.224	467
193	0.220	461
194	0.217	456
195	0.213	450
196	0.210	445
197	0.206	439
198	0.203	434
199	0.200	429
200	0.197	424
201	0.194	419
202	0.191	415
203	0.188	410
204	0.185	405
205	0.182	401
206	0.179	396
207	0.176	391
208	0.173	386
209	0.171	382
210	0.168	377
211	0.165	372
212	0.163	367
213	0.160	361
214	0.158	356
215	0.155	350
216	0.153	344
217	0.151	338
218	0.148	332
219	0.146	325
220	0.144	318
221	0.142	311
222	0.140	304
223	0.138	297
224	0.135	289
225	0.133	282

Table 48 — 5K Thermistor Temperatures (°C) vs. Resistance/Voltage Drop (Voltage Drop for EWT, LWT, RGT, CNDE, CNDL, Dual Chiller, and OAT)

TEMP (C)	VOLTAGE DROP (V)	RESISTANCE (Ohms)
–32	3.705	100,260
–31	3.687	94,165
–30	3.668	88,480
–29	3.649	83,170
–28	3.629	78,125
–27	3.608	73,580
–26	3.586	69,250
–25	3.563	65,205
–24	3.539	61,420
–23	3.514	57,875
–22	3.489	54,555
–21	3.462	51,450
–20	3.434	48,536
–19	3.406	45,807
–18	3.376	43,247
–17	3.345	40,845
–16	3.313	38,592
–15	3.281	38,476
–14	3.247	34,489
–13	3.212	32,621
–12	3.177	30,866
–11	3.140	29,216
–10	3.103	27,633
–9	3.065	26,202
–8	3.025	24,827
–7	2.985	23,532
–6	2.945	22,313
–5	2.903	21,163
–4	2.860	20,079
–3	2.817	19,058
–2	2.774	18,094
–1	2.730	17,184
0	2.685	16,325
1	2.639	15,515
2	2.593	14,749
3	2.547	14,026
4	2.500	13,342
5	2.454	12,696
6	2.407	12,085
7	2.360	11,506
8	2.312	10,959
9	2.265	10,441
10	2.217	9,949
11	2.170	9,485
12	2.123	9,044
13	2.076	8,627
14	2.029	8,231
15	1.982	7,855
16	1.935	7,499
17	1.889	7,161
18	1.844	6,840
19	1.799	6,536
20	1.754	6,246
21	1.710	5,971
22	1.666	5,710
23	1.623	5,461
24	1.580	5,225
25	1.538	5,000
26	1.497	4,786
27	1.457	4,583
28	1.417	4,389
29	1.378	4,204
30	1.340	4,028
31	1.302	3,861
32	1.265	3,701
33	1.229	3,549
34	1.194	3,404
35	1.160	3,266
36	1.126	3,134
37	1.093	3,008
38	1.061	2,888
39	1.030	2,773
40	0.999	2,663
41	0.969	2,559
42	0.940	2,459
43	0.912	2,363
44	0.885	2,272
45	0.858	2,184
46	0.832	2,101
47	0.807	2,021
48	0.782	1,944
49	0.758	1,871
50	0.735	1,801
51	0.713	1,734
52	0.691	1,670
53	0.669	1,609
54	0.649	1,550
55	0.629	1,493
56	0.610	1,439
57	0.591	1,387
58	0.573	1,337
59	0.555	1,290
60	0.538	1,244
61	0.522	1,200
62	0.506	1,158
63	0.490	1,118
64	0.475	1,079
65	0.461	1,041
66	0.447	1,006
67	0.433	971
68	0.420	938
69	0.407	906
70	0.395	876
71	0.383	836
72	0.371	805
73	0.360	775
74	0.349	747
75	0.339	719
76	0.329	693
77	0.319	669
78	0.309	645
79	0.300	623
80	0.291	602
81	0.283	583
82	0.274	564
83	0.266	547
84	0.258	531
85	0.251	516
86	0.244	502
87	0.237	489
88	0.230	477
89	0.223	466
90	0.217	456
91	0.211	446
92	0.204	436
93	0.199	427
94	0.193	419
95	0.188	410
96	0.182	402
97	0.177	393
98	0.172	385
99	0.168	376
100	0.163	367
101	0.158	357
102	0.154	346
103	0.150	335
104	0.146	324
105	0.142	312
106	0.138	299
107	0.134	285

Table 49 — 10K Thermistor Temperature (°F) vs. Resistance/Voltage Drop (For SPT)

TEMP (F)	VOLTAGE DROP (V)	RESISTANCE (Ohms)
–25	4.758	196,453
–24	4.750	189,692
–23	4.741	183,300
–22	4.733	177,000
–21	4.724	171,079
–20	4.715	165,238
–19	4.705	159,717
–18	4.696	154,344
–17	4.686	149,194
–16	4.676	144,250
–15	4.665	139,443
–14	4.655	134,891
–13	4.644	130,402
–12	4.633	126,183
–11	4.621	122,018
–10	4.609	118,076
–9	4.597	114,236
–8	4.585	110,549
–7	4.572	107,006
–6	4.560	103,558
–5	4.546	100,287
–4	4.533	97,060
–3	4.519	94,020
–2	4.505	91,019
–1	4.490	88,171
0	4.476	85,396
1	4.461	82,729
2	4.445	80,162
3	4.429	77,662
4	4.413	75,286
5	4.397	72,940
6	4.380	70,727
7	4.363	68,542
8	4.346	66,465
9	4.328	64,439
10	4.310	62,491
11	4.292	60,612
12	4.273	58,781
13	4.254	57,039
14	4.235	55,319
15	4.215	53,693
16	4.195	52,086
17	4.174	50,557
18	4.153	49,065
19	4.132	47,627
20	4.111	46,240
21	4.089	44,888
22	4.067	43,598
23	4.044	42,324
24	4.021	41,118
25	3.998	39,926
26	3.975	38,790
27	3.951	37,681
28	3.927	36,610
29	3.903	35,577
30	3.878	34,569
31	3.853	33,606
32	3.828	32,654
33	3.802	31,752
34	3.776	30,860
35	3.750	30,009
36	3.723	29,177
37	3.697	28,373
38	3.670	27,597
39	3.654	26,838
40	3.615	26,113
41	3.587	25,396
42	3.559	24,715
43	3.531	24,042
44	3.503	23,399
45	3.474	22,770
46	3.445	22,161
47	3.416	21,573
48	3.387	20,998
49	3.357	20,447
50	3.328	19,903
51	3.298	19,386
52	3.268	18,874
53	3.238	18,384
54	3.208	17,904
55	3.178	17,441
56	3.147	16,991
57	3.117	16,552
58	3.086	16,131
59	3.056	15,714
60	3.025	15,317
61	2.994	14,925
62	2.963	14,549
63	2.932	14,180
64	2.901	13,824
65	2.870	13,478
66	2.839	13,139
67	2.808	12,814
68	2.777	12,493
69	2.746	12,187
70	2.715	11,884
71	2.684	11,593
72	2.653	11,308
73	2.622	11,031
74	2.592	10,764
75	2.561	10,501
76	2.530	10,249
77	2.500	10,000
78	2.470	9,762
79	2.439	9,526
80	2.409	9,300
81	2.379	9,078
82	2.349	8,862
83	2.319	8,653
84	2.290	8,448
85	2.260	8,251
86	2.231	8,056
87	2.202	7,869
88	2.173	7,685
89	2.144	7,507
90	2.115	7,333
91	2.087	7,165
92	2.059	6,999
93	2.030	6,838
94	2.003	6,683
95	1.975	6,530
96	1.948	6,383
97	1.921	6,238
98	1.894	6,098
99	1.867	5,961
100	1.841	5,827
101	1.815	5,698
102	1.789	5,571
103	1.763	5,449
104	1.738	5,327
105	1.713	5,210
106	1.688	5,095
107	1.663	4,984
108	1.639	4,876
109	1.615	4,769
110	1.591	4,666
111	1.567	4,564
112	1.544	4,467
113	1.521	4,370
114	1.498	4,277
115	1.475	4,185
116	1.453	4,096
117	1.431	4,008
118	1.409	3,923
119	1.387	3,840
120	1.366	3,759
121	1.345	3,681
122	1.324	3,603
123	1.304	3,529
124	1.284	3,455
125	1.264	3,383
126	1.244	3,313
127	1.225	3,244
128	1.206	3,178
129	1.187	3,112
130	1.168	3,049
131	1.150	2,986
132	1.132	2,926
133	1.114	2,866
134	1.096	2,809
135	1.079	2,752
136	1.062	2,697
137	1.045	2,643
138	1.028	2,590
139	1.012	2,539
140	0.996	2,488
141	0.980	2,439
142	0.965	2,391
143	0.949	2,343
144	0.934	2,297
145	0.919	2,253
146	0.905	2,209
147	0.890	2,166
148	0.876	2,124
149	0.862	2,083
150	0.848	2,043
151	0.835	2,003
152	0.821	1,966
153	0.808	1,928
154	0.795	1,891
155	0.782	1,855
156	0.770	1,820
157	0.758	1,786
158	0.745	1,752
159	0.733	1,719
160	0.722	1,687
161	0.710	1,656
162	0.699	1,625
163	0.687	1,594
164	0.676	1,565
165	0.666	1,536
166	0.655	1,508
167	0.645	1,480
168	0.634	1,453
169	0.624	1,426
170	0.614	1,400
171	0.604	1,375
172	0.595	1,350
173	0.585	1,326
174	0.576	1,302
175	0.567	1,278
176	0.558	1,255
177	0.549	1,233
178	0.540	1,211
179	0.532	1,190
180	0.523	1,169
181	0.515	1,148
182	0.507	1,128
183	0.499	1,108
184	0.491	1,089
185	0.483	1,070
186	0.476	1,052
187	0.468	1,033
188	0.461	1,016
189	0.454	998
190	0.447	981
191	0.440	964
192	0.433	947
193	0.426	931
194	0.419	915
195	0.413	900
196	0.407	885
197	0.400	870
198	0.394	855
199	0.388	841
200	0.382	827
201	0.376	814
202	0.370	800
203	0.365	787
204	0.359	774
205	0.354	762
206	0.349	749
207	0.343	737
208	0.338	725
209	0.333	714
210	0.328	702
211	0.323	691
212	0.318	680
213	0.314	670
214	0.309	659
215	0.305	649
216	0.300	639
217	0.296	629
218	0.292	620
219	0.288	610
220	0.284	601
221	0.279	592
222	0.275	583
223	0.272	574
224	0.268	566
225	0.264	557

Table 50 — 10K Thermistor Temperature (°C) vs. Resistance/Voltage Drop (For SPT)

TEMP (C)	VOLTAGE DROP (V)	RESISTANCE (Ohms)	TEMP (C)	VOLTAGE DROP (V)	RESISTANCE (Ohms)	TEMP (C)	VOLTAGE DROP (V)	RESISTANCE (Ohms)
–32	4.762	200,510	**15**	3.056	15,714	**62**	0.940	2,315
–31	4.748	188,340	**16**	3.000	15,000	**63**	0.913	2,235
–30	4.733	177,000	**17**	2.944	14,323	**64**	0.887	2,157
–29	4.716	166,342	**18**	2.889	13,681	**65**	0.862	2,083
–28	4.700	156,404	**19**	2.833	13,071	**66**	0.837	2,011
–27	4.682	147,134	**20**	2.777	12,493	**67**	0.813	1,943
–26	4.663	138,482	**21**	2.721	11,942	**68**	0.790	1,876
–25	4.644	130,402	**22**	2.666	11,418	**69**	0.767	1,813
–24	4.624	122,807	**23**	2.610	10,921	**70**	0.745	1,752
–23	4.602	115,710	**24**	2.555	10,449	**71**	0.724	1,693
–22	4.580	109,075	**25**	2.500	10,000	**72**	0.703	1,637
–21	4.557	102,868	**26**	2.445	9,571	**73**	0.683	1,582
–20	4.533	97,060	**27**	2.391	9,164	**74**	0.663	1,530
–19	4.508	91,588	**28**	2.337	8,776	**75**	0.645	1,480
–18	4.482	86,463	**29**	2.284	8,407	**76**	0.626	1,431
–17	4.455	81,662	**30**	2.231	8,056	**77**	0.608	1,385
–16	4.426	77,162	**31**	2.178	7,720	**78**	0.591	1,340
–15	4.397	72,940	**32**	2.127	7,401	**79**	0.574	1,297
–14	4.367	68,957	**33**	2.075	7,096	**80**	0.558	1,255
–13	4.335	65,219	**34**	2.025	6,806	**81**	0.542	1,215
–12	4.303	61,711	**35**	1.975	6,530	**82**	0.527	1,177
–11	4.269	58,415	**36**	1.926	6,266	**83**	0.512	1,140
–10	4.235	55,319	**37**	1.878	6,014	**84**	0.497	1,104
–9	4.199	52,392	**38**	1.830	5,774	**85**	0.483	1,070
–8	4.162	49,640	**39**	1.784	5,546	**86**	0.470	1,037
–7	4.124	47,052	**40**	1.738	5,327	**87**	0.457	1,005
–6	4.085	44,617	**41**	1.692	5,117	**88**	0.444	974
–5	4.044	42,324	**42**	1.648	4,918	**89**	0.431	944
–4	4.003	40,153	**43**	1.605	4,727	**90**	0.419	915
–3	3.961	38,109	**44**	1.562	4,544	**91**	0.408	889
–2	3.917	36,182	**45**	1.521	4,370	**92**	0.396	861
–1	3.873	34,367	**46**	1.480	4,203	**93**	0.386	836
0	3.828	32,654	**47**	1.439	4,042	**94**	0.375	811
1	3.781	31,030	**48**	1.400	3,889	**95**	0.365	787
2	3.734	29,498	**49**	1.362	3,743	**96**	0.355	764
3	3.686	28,052	**50**	1.324	3,603	**97**	0.345	742
4	3.637	26,686	**51**	1.288	3,469	**98**	0.336	721
5	3.587	25,396	**52**	1.252	3,340	**99**	0.327	700
6	3.537	24,171	**53**	1.217	3,217	**100**	0.318	680
7	3.485	23,013	**54**	1.183	3,099	**101**	0.310	661
8	3.433	21,918	**55**	1.150	2,986	**102**	0.302	643
9	3.381	20,883	**56**	1.117	2,878	**103**	0.294	626
10	3.328	19,903	**57**	1.086	2,774	**104**	0.287	609
11	3.274	18,972	**58**	1.055	2,675	**105**	0.279	592
12	3.220	18,090	**59**	1.025	2,579	**106**	0.272	576
13	3.165	17,255	**60**	0.996	2,488	**107**	0.265	561
14	3.111	16,464	**61**	0.968	2,400			

Table 51 — 86K Thermistor vs Resistance (DTT)

TEMP (C)	TEMP (F)	RESISTANCE (Ohms)	TEMP (C)	TEMP (F)	RESISTANCE (Ohms)
-40	**-40**	2,889,600	**75**	**167**	12,730
-35	**-31**	2,087,220	**80**	**176**	10,790
-30	**-22**	1,522,200	**85**	**185**	9,200
-25	**-13**	1,121,440	**90**	**194**	7,870
-20	**-4**	834,720	**95**	**203**	6,770
-15	**5**	627,280	**100**	**212**	5,850
-10	**14**	475,740	**105**	**221**	5,090
-5	**23**	363,990	**110**	**230**	4,450
0	**32**	280,820	**115**	**239**	3,870
5	**41**	218,410	**120**	**248**	3,350
10	**50**	171,170	**125**	**257**	2,920
15	**59**	135,140	**130**	**266**	2,580
20	**68**	107,440	**135**	**275**	2,280
25	**77**	86,000	**140**	**284**	2,020
30	**86**	69,280	**145**	**293**	1,800
35	**95**	56,160	**150**	**302**	1,590
40	**104**	45,810	**155**	**311**	1,390
45	**113**	37,580	**160**	**320**	1,250
50	**122**	30,990	**165**	**329**	1,120
55	**131**	25,680	**170**	**338**	1,010
60	**140**	21,400	**175**	**347**	920
70	**158**	15,070	**180**	**356**	830

Strainer — Periodic cleaning of the required field-installed strainer is required. Pressure drop across strainer in excess of 3 psi (21 kPa) indicates the need for cleaning. Normal (clean) pressure drop is approximately 1 psi (6.9 kPa). Open the blowdown valve to clean the strainer. If required, shut the chiller down and remove the strainer screen to clean. When strainer has been cleaned, enter 'YES' for Strainer Maintenance Done (***Run Status→PM→S.T.MN)***.

Replacing Defective Modules — The *Comfort*-Link replacement modules are shown in Table 52. If the main base board (MBB) has been replaced, verify that all configuration data is correct. Follow the ***Configuration*** mode table and verify that all items under sub-modes ***UNIT***, ***OPT1*** and ***OPT2*** are correct. Any additional field-installed accessories or options (***RSET***, ***SLCT*** sub-modes) should also be verified as well as any specific time and maintenance schedules.

Refer to the Start-Up Checklist for 30MP Liquid Chillers (completed at time of original start-up) found in the job folder. This information is needed later in this procedure. If the checklist does not exist, fill out the current information in the Configuration mode on a new checklist. Tailor the various options and configurations as needed for this particular installation.

⚠ WARNING

Electrical shock can cause personal injury and death. Shut off all power to this equipment during installation. There may be more than one disconnect switch. Tag all disconnect locations to alert others not to restore power until work is completed.

1. Check that all power to unit is off. Carefully disconnect all wires from the defective module by unplugging its connectors.
2. Remove the defective module by removing its mounting screws with a Phillips screwdriver, and removing the module from the control box. Save the screws later use.
3. Verify that the instance jumper (MBB) or address switches (all other modules) exactly match the settings of the defective module.

   NOTE: Handle boards by mounting standoffs only to avoid electrostatic discharge.
4. Package the defective module in the carton of the new module for return to Carrier.
5. Mount the new module in the unit's control box using a Phillips screwdriver and the screws saved in Step 2.
6. Reinstall all module connectors. For accessory Navigator™ device replacement, make sure the plug is installed at TB3 in the LEN connector.
7. Carefully check all wiring connections before restoring power.
8. Verify the ENABLE/OFF/REMOTE CONTROL switch is in the OFF position.
9. Restore control power. Verify that all module red LEDs blink in unison. Verify that all green LEDs are blinking and that the scrolling marquee or Navigator™ display is communicating correctly.
10. Verify all configuration information, settings, set points and schedules. Return the ENABLE/OFF/REMOTE CONTROL switch to its previous position.

Table 52 — Replacement Modules

MODULE	REPLACEMENT PART NO. (with Software)
Main Base Board (MBB)	30MP500346
Scrolling Marquee Display	HK50AA031
Energy Management Module (EMM)	30GT515218
Navigator Display	HK50AA033
Electronic Expansion Valve (EXV)	30GT515217

MAINTENANCE

Recommended Maintenance Schedule — The following are only recommended guidelines. Jobsite conditions may dictate that maintenance tasks are performed more often than recommended.

Routine:

Every month:
- Check water quality. Inspection interval to be determined by site conditions and water quality specialist.
- Check moisture indicating sight glass for possible refrigerant loss and presence of moisture.

Every 3 months (for all machines):
- Check refrigerant charge.
- Check all refrigerant joints and valves for refrigerant leaks, repair as necessary.
- Check chilled water flow switch operation.
- Check compressor oil level.

Every 12 months (for all machines):
- Check all electrical connections, tighten as necessary.
- Inspect all contactors and relays, replace as necessary.
- Check accuracy of thermistors, replace if greater than ± 2° F (1.2° C) variance from calibrated thermometer.
- Check to be sure that the proper concentration of antifreeze is present in the chilled water loop, if applicable.
- Verify that the chilled water loop is properly treated.
- Check refrigerant filter driers for excessive pressure drop, replace as necessary. The 30MP015-045 units contain a hermetic filter drier. The 30MP050-071 units contain a replaceable core type filter drier.
- Check chilled water and condenser strainers, clean as necessary.
- Perform Service Test to confirm operation of all components.
- Check for excessive cooler approach (Leaving Chilled Water Temperature – Saturated Suction Temperature) which may indicate fouling. Clean evaporator if necessary.
- Check for excessive condenser approach (Saturated Discharge Pressure – Leaving Condenser Water Temperature) which may indicate fouling. Clean condenser if necessary (30MPW only).

TROUBLESHOOTING

Complete Unit Stoppage and Restart — Possible causes for unit stoppage and reset methods are shown below and in Table 53. Refer to Fig. 2-9 for component arrangement and control wiring diagrams.

GENERAL POWER FAILURE — After power is restored, restart is automatic through normal MBB start-up.

UNIT ENABLE-OFF-REMOTE CONTROL SWITCH IS OFF — When the switch is OFF, the unit will stop immediately. Place the switch in the ENABLE position for local switch control or in the REMOTE CONTROL position for control through remote control closure.

CHILLED FLUID PROOF-OF-FLOW SWITCH OPEN — After the problem causing the loss of flow has been corrected, reset is manual by resetting the alarm with the scrolling marquee.

Table 53 — Troubleshooting

SYMPTOMS	CAUSE	REMEDY
Compressor Cycles Off on Loss of Charge	Loss of charge control. Acting erratically.	Repair leak and recharge.
		Replace control.
	Low refrigerant charge	Add refrigerant.
	Low suction temperature	Raise cooler leaving fluid temperature set point.
Compressor Cycles Off on Out of Range Condition	Thermistor failure	Replace thermistor.
	System load was reduced faster than controller could remove stages	Unit will restart after fluid temperature rises back into the control band. Avoid rapidly removing system load or increase loop volume.
	Temperature controller deadband setting is too low	Raise deadband setting.
Compressor Shuts Down on High-Pressure Control	High-pressure control acting erratically	Replace control.
	Noncondensables in system	Purge system.
	Condenser scaled/dirty (30MPW)	Clean condenser.
	Fans in remote condensing unit (30MPA only) not operating	Repair or replace if defective.
	System overcharged with refrigerant	Reduce charge.
Unit Operates Too Long or Continuously	Low refrigerant charge	Add refrigerant.
	Control contacts fused	Replace control.
	Air in system	Purge system.
	Partially plugged or plugged expansion valve or filter drier	Clean or replace as needed.
	Defective insulation	Replace or repair as needed.
	Service load	Keep doors and windows closed.
	Damaged compressor	Check compressor and replace if necessary.
Unusual or Loud System Noises	Piping vibration	Support piping as required.
		Check for loose pipe connections or damaged compressor
	Expansion valve hissing	Check refrigerant charge.
		Check for plugged liquid line filter drier.
	Compressor noisy	Replace compressor (worn bearings).
		Check for loose compressor holddown bolts.
		Operation outside of compressor operating envelope. Consider head pressure control, clean condenser. Check water flow (cooler and condenser).
	Compressor not pumping	Advanced scroll temperature protection is active. Determine high discharge temperature reason.
Compressor Loses Oil	Leak in system	Repair leak.
	Mechanical damage (Failed seals or broken scrolls)	Replace compressor.
	Oil trapped in line	Check piping for oil traps.
Hot Liquid Line	Shortage of refrigerant due to leak	Repair leak and recharge.
Frosted Liquid Line	Restricted filter drier	Replace filter drier.
Frosted Suction Line	Expansion valve admitting excess refrigerant (note: this is a normal condition for brine applications)	Replace valve if defective.
	Stuck TXV (thermostatic expansion valve)	Replace valve if defective.
Freeze-Up	Improper charging	Make sure a full quantity of fluid is flowing through the cooler while charging, and suction pressure in cooler is equal to or greater than pressure corresponding to 32 F (0° C).
	System not drained for winter shutdown	*Recommended that system be filled with an appropriate glycol mixture to prevent freezing of pumps and fluid tubing.*
	Loose thermistor	Verify thermistors are fully inserted in wells.

OPEN 24-V CONTROL CIRCUIT BREAKER(S) — Determine the cause of the failure and correct. Reset circuit breaker(s). Restart is automatic after MBB start-up cycle is complete.

COOLING LOAD SATISFIED — Unit shuts down when cooling load has been satisfied. Unit restarts when required to satisfy leaving fluid temperature set point.

THERMISTOR FAILURE — If a thermistor fails in either an open or shorted condition, the unit will be shut down. Replace EWT, or LWT as required. Unit restarts automatically, but must be reset manually by resetting the alarm with the scrolling marquee.

⚠ CAUTION

If unit stoppage occurs more than once as a result of any of the safety devices listed, determine and correct cause before attempting another restart.

ENABLING AND DISABLING COMPRESSORS — Compressors in the 30MP units can be enabled or disabled in the controls. To enable or disable a compressor, toggle the value in the ***Configuration→SERV*** menu for each individual compressor.

COMPRESSOR DISCHARGE CHECK VALVE — A disk-type check valve in the discharge of the compressor prevents high pressure discharge gas from flowing rapidly back through the compressor at shutdown. This same check valve prevents a high to low side bypass in multiple compressor circuits.

LOW SATURATED SUCTION — Several conditions can lead to low saturated suction alarms and the chiller controls have several override modes built in which will attempt to keep the chiller from shutting down. Low fluid flow, low refrigerant charge and plugged filter driers are the main causes for this condition. To avoid permanent damage and potential freezing of the system, do NOT repeatedly reset these alert and/or alarm conditions without identifying and correcting the cause(s).

COMPRESSOR SAFETIES — The 30MP units with *Comfort*Link controls include a compressor protection board that protects the operation of each of the compressors. Each board senses the presence or absence of current to each compressor.

If there is a command for a compressor to run and there is no current, then one of the following safeties or conditions have turned the compressor off:

Compressor Overcurrent — All compressors have internal line breaks or a motor protection device located in the compressor electrical box.

Compressor Short Circuit — There will not be current if the compressor circuit breaker that provides short circuit protection has tripped.

Compressor Motor Over Temperature — The internal line-break or over temperature switch has opened.

High-Pressure Switch Trip — The high-pressure switch has opened. See Table 46 for the factory settings for the fixed high-pressure switch.

ASTP Protection Trip (30MP015-045 Only) — All non-digital Copeland compressors are equipped with an advanced scroll temperature protection (ASTP). A label located above the terminal box identifies models that contain this technology. See Fig. 35.

Advanced scroll temperature protection is a form of internal discharge temperature protection that unloads the scroll compressor when the internal temperature reaches approximately 300 F (149 C). At this temperature, an internal bi-metal disk valve opens and causes the scroll elements to separate, which stops compression. Suction and discharge pressures balance while the motor continues to run. The longer the compressor runs unloaded, the longer it must cool before the bi-metal disk resets. See Fig. 36 for approximate reset times.

Fig. 35 — Advanced Scroll Temperature Protection Label

To manually reset ASTP, the compressor should be stopped and allowed to cool. If the compressor is not stopped, the motor will run until the motor protector trips, which occurs up to 90 minutes later. Advanced scroll temperature protection will reset automatically before the motor protector resets, which may take up to 2 hours.

High Discharge Gas Temperature Protection — Units equipped with optional digital compressors have an additional thermistor located on the discharge line. If discharge temperature exceeds 265 F (129.4 C), the digital compressor will be shut off.

Alarms will also occur if the current sensor board malfunctions or is not properly connected to its assigned digital input. If the compressor is commanded OFF and the current sensor reads ON, an alert is generated. This will indicate that a compressor contactor has failed closed. In this case, a special mode, Compressor Stuck on Control, will be enabled and all other compressors will be turned off. An alarm will then be enabled to indicate that service is required. Outdoor fans will continue to operate. The condenser output is turned on immediately.

Motor Overload Protection

COPELAND* COMPRESSORS MODELS WITH ELECTRICAL CODE TF — — Models with a "TF" in the electrical code (i.e., ZP182KCE-**TF**E) have an internal line break motor overload located in the center of the Y of the motor windings. This overload disconnects all three legs of the motor from power in case of an over-current or over-temperature condition. The overload reacts to a combination of motor current and motor winding temperature. The internal overload protects against single phasing. Time must be allowed for the motor to cool down before the overload will reset. If current monitoring to the compressor is available, the system controller can take advantage of the compressor internal overload operation. The controller can lock out the compressor if current draw is not coincident with contactor energizing, implying that the compressor has shut off on its internal overload. This will prevent unnecessary compressor cycling on a fault condition until corrective action can be taken.

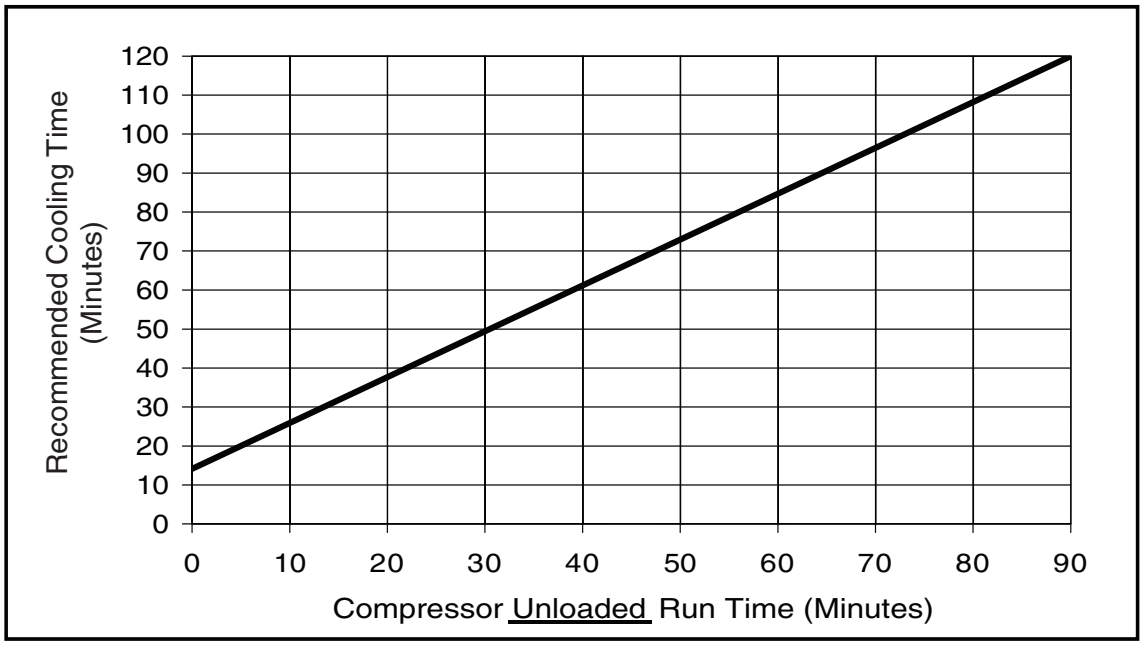

*Times are approximate.
NOTE: Various factors, including high humidity, high ambient temperature, and the presence of a sound blanket will increase cool-down times.

Fig. 36 — Recommended Minimum Cool Down Time After Compressor is Stopped*

* Trademark of Emerson Climate Technologies.

COPELAND COMPRESSORS MODELS WITH ELECTRICAL CODE TW OR TE

⚠ CAUTION

The electronic motor protection module is a safety device that must not be bypassed or compressor damage may result.

Models with a "TW" or "TE" in the electrical code (i.e., ZP182KCE-**TW**D or ZP182KCE-**TE**D) have a motor overload system that consists of an external electronic control module connected to a chain of four thermistors embedded in the motor windings. The module will trip and remain off for a minimum of 30 minutes if the motor temperature exceeds a preset point to allow the scrolls to cool down after the motor temperature limit has been reached. It may take as long as two hours for the motor to cool down before the overload will reset.

NOTE: Turning off power to the module will reset it immediately.

⚠ CAUTION

Restoring the compressor sooner may cause a destructive temperature build up in the scrolls.

For this reason, module power must never be switched with the control circuit voltage.

Current sensing boards monitor to the compressor current. The *Comfort*Link control system takes advantage of the compressor overload operation by locking out the compressor if current draw is not detected. This will prevent unnecessary compressor cycling on a fault condition until corrective action can be taken.

Kriwan Motor Protection Module Troubleshooting — Copeland models with a "TW" in the electrical code (i.e., ZP182KCE-**TW**D), have a motor overload system that consists of an external Kriwan electronic control module. These have been replaced by the CoreSense* communication module for motor protection. This section is included for reference, and contains instructions for replacing the Kriwan module with the CoreSense module in the field.

Follow the steps listed below to troubleshoot the Kriwan module in the field. See wiring diagram on terminal box cover, or Fig. 37.

⚠ WARNING

Do not supply power to unit with compressor cover removed. Failure to follow this warning can cause a fire, resulting in personal injury or death.

⚠ WARNING

Exercise extreme caution when reading compressor currents when high-voltage power is on. Correct any of the problems described below before installing and running a replacement compressor. Wear safety glasses and gloves when handling refrigerants. Failure to follow this warning can cause fire, resulting in personal injury or death.

⚠ CAUTION

Do not manually operate contactors. Serious damage to the machine may result.

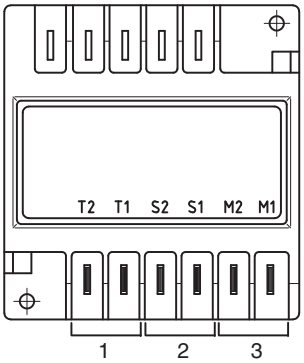

LEGEND

1 — Kriwan Motor Protection Module Power
2 — Kriwan Control Circuit Connections
3 — Motor Thermal Sensor

Fig. 37 — Kriwan Motor Protection Wiring

1. De-energize control circuit and module power. Remove the control circuit wires from the module (terminals M1 and M2). Connect a jumper across these control circuit wires. This will bypass the control contact of the module.

⚠ CAUTION

The motor protection system within the compressor is now bypassed. Use this configuration to temporarily test module only.

2. Re-energize the control circuit and module power. If the compressor will not operate with the jumper installed, then the problem is external to the solid-state protection system. If the compressor operates with the module bypassed but will not operate when the module is reconnected, then the control circuit relay in the module is open. Remove the temporary jumper installed in Step 1.
3. The thermistor protection chain now needs to be tested to determine if the module's control circuit relay is open due to excessive internal temperatures or a faulty component. Check the thermistor protection chain located in the compressor as follows:
   a. De-energize control circuit and module power.
   b. Remove the sensor leads from the module (S1 and S2).
   c. Measure the resistance of the thermistor protection chain through these sensor leads with an ohm meter.

⚠ CAUTION

Use an ohmmeter with a maximum of 9 volts to check the sensor chain. The sensor chain is sensitive and easily damaged; no attempt should be made to check continuity through it with anything other than an ohmmeter. The application of any external voltage to the sensor chain may cause damage requiring the replacement of the compressor.

   d. The diagnosis of this resistance reading is as follows:
   - 200 to 2250 ohms: Normal operating range
   - 2750 ohms or greater: Compressor overheated. Allow time to cool.
   - Zero resistance: Shorted sensor circuit. Replace the compressor.
   - Infinite resistance: Open sensor circuit. Replace the compressor.

* Trademark of Emerson Climate Technologies.

4. If the resistance reading is abnormal, remove the sensor connector plug from the compressor and measure the resistance at the sensor fusite pins. This will determine if the abnormal reading was due to a faulty connector.
5. On initial start-up, and after any module trip, the resistance of the sensor chain must be below the module reset point before the module circuit will close. Reset values are 2250 to 3000 ohms.
6. If the sensor chain has a resistance that is below 2250 ohms, and the compressor will run with the control circuit bypassed, but will not run when connected properly, the solid-state module is defective and should be replaced. The replacement module must have the same supply voltage rating as the original module.

CoreSense Replacement of Kriwan Motor Protection Module — The Kriwan module has been replaced by the CoreSense communication module for motor protection. Minor wiring changes are required as described below.

⚠ WARNING

Electrical shock can cause personal injury and death. Shut off all power to this equipment during installation and service. There may be more than one disconnect switch. Tag all disconnect locations to alert others not to restore power until work is completed.

⚠ WARNING

Do not supply power to unit with compressor cover removed. Failure to follow this warning can cause a fire, resulting in personal injury or death.

Removing the Kriwan motor protection module:

1. Disconnect and lock out the high voltage and control voltage supply to the unit.
2. Using a straight blade screwdriver, carefully depress the tabs holding the terminal cover to the terminal box to remove the terminal cover. Before proceeding, use a volt meter to verify that the power has been disconnected from the unit.
3. Using wire markers, label the M1, M2, T1, and T2 wires that are connected to the Kriwan module. Using needle nose pliers, remove the M1, M2, T1, T2, S1 and S2 wires from the Kriwan motor protector module.
4. Gently bend the holding tabs holding the Kriwan module in the terminal box and remove the Kriwan module from the terminal box. See Fig. 38.
5. Take note of the S1-S2 plug orientation on the compressor thermistor fusite. Remove the S1-S2 wire harness and plug from the compressor.

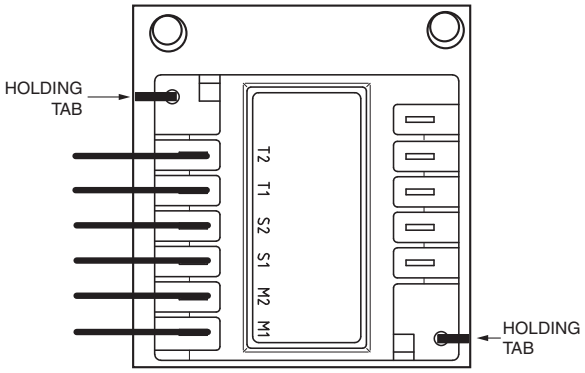

Fig. 38 — Kriwan Motor Protection Module Removal

Installing the CoreSense communications module:

1. A new S1-S2 thermistor wiring harness is shipped with the CoreSense kit and must be used. The wiring harness connector block should be fully inserted on the three pins in the orientation shown in Fig. 39 for proper operation.

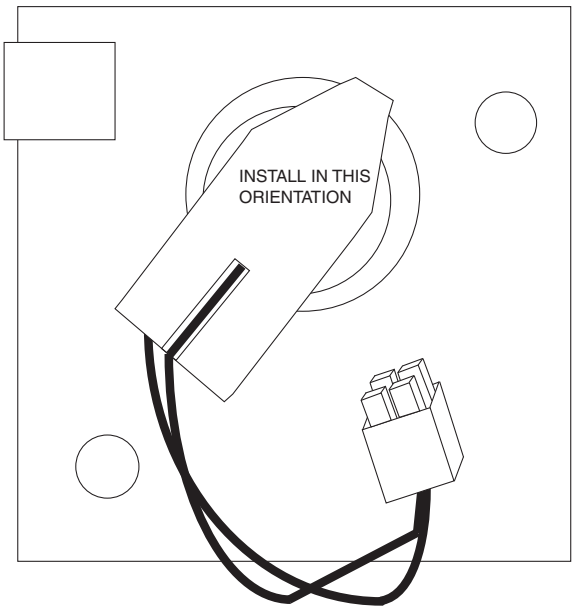

Fig. 39 — Compressor Motor Sensor Harness Installation (under motor protection module)

2. Review the DIP switch settings on the CoreSense module. DIP switch no. 1 should be ON (up position) and all other DIP switches should be OFF (down position). See Fig. 40.

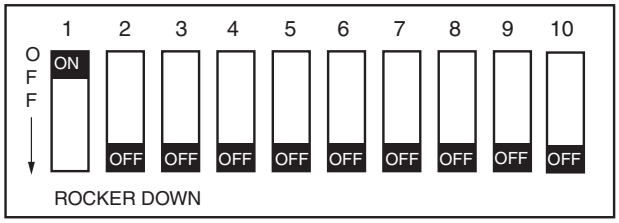

Fig. 40 — CoreSense Communication DIP Switch Settings for Kriwan Retrofit

3. Install the CoreSense module in the compressor terminal box as shown in Fig. 41, with the tabs holding the module in place. Route the thermistor wire harness as shown

and plug the harness into the 2x2 socket on the CoreSense module.

4. Connect the previously labeled M1, M2, T1, and T2 wires to the appropriate terminals on the CoreSense module.
5. Connect the L1, L2, and L3 phase sensing wires to the L1, L2, and L3 compressor terminal block connections. See the compressor terminal cover diagram for identication of the L1, L2, and L3 terminal block connections.
6. Double-check the installation and make sure all connections are secure. Install the compressor terminal cover.

   The CoreSense retrofit is complete and the system can be put back into service.

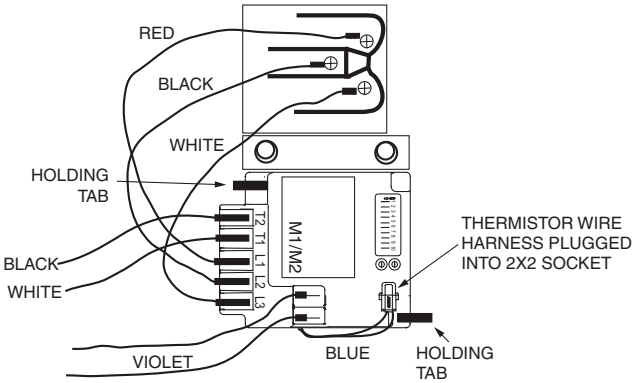

Fig. 41 — CoreSense Communication Module Mounting

CoreSense Communications Module Troubleshooting — Copeland models with a "TE" in the electrical code (i.e., ZP182KCE-**TE**D) have a motor overload system that consists of an external CoreSense communication electronic control module.

Motor thermistors are connected to the CoreSense communication module via a 2x2 plug (Fig. 42).

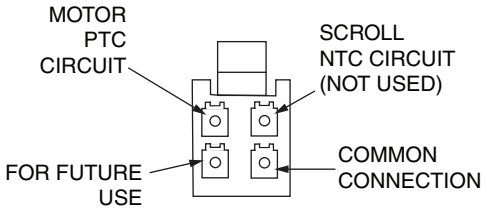

Fig. 42 — CoreSense Communications Motor Thermistor Plug

The CoreSense communications module has field configurable DIP switches for addressing and configuring the module. The DIP switches should be addressed as shown in Table 54.

The CoreSense communication module has a green and a red light-emitting diode (LED). A solid green LED indicates the module is powered and operation is normal. A solid red LED indicates an internal problem with the module. If a solid red LED is encountered, power down the module (interrupt the T1-T2 power) for 30 seconds to reboot the module. If a solid red LED is persistent, change the CoreSense module.

The CoreSense module communicates warning codes via a green flashing LED. Warning codes do not result in a trip or lockout condition. Alert codes are communicated via a red flashing LED. Alert codes will result in a trip condition and possibly a lockout condition. See wiring diagram on terminal box cover, or Fig. 43. The flash code corresponds to the number of LED flashes, followed by a pause, and then the flash code is repeated. A lockout condition produces a red flash, followed by a pause, a solid red, a second pause, and then repeated. Table 55 lists the flash code information for Warning and Alert codes along with code reset and troubleshooting information.

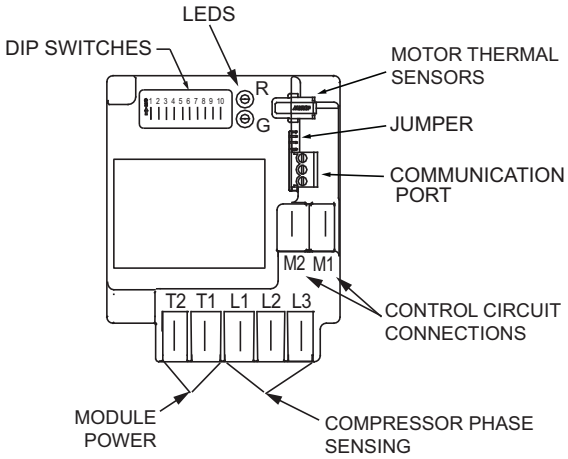

Fig. 43 — CoreSense Communication Motor Protection Wiring

Warning Codes (Green LED Flash Code):

- Code 1 – Loss of Communication: The module will flash the green Warning LED one time indicating the module has not communicated with the master controller for longer than 5 minutes. Once communication is reinitiated, the Warning will be cleared. The 30MP units do not support the communication capability of this module.
- Code 2 – Reserved For Future Use
- Code 3 – Short Cycling: The module will flash the green Warning LED three times indicating the compressor has short cycled more than 48 times in 24 hours. A short cycle is defined as compressor runtime of less than 1 minute. The Warning will be activated when the “Short Cycling” DIP Switch (no. 10) is OFF (in the down position). When fewer than 48 short cycles are accumulated in 24 hours the Warning code will be cleared.
- Code 4 – Open/Shorted Scroll Thermistor: The module will flash the green Warning LED four times, indicating that the scroll NTC thermistor has a resistance value that indicates an open/shorted thermistor. The Warning will be cleared when the resistance value is in the normal range. The 30MP units do not utilize a scroll thermistor.
- Code 5 – Not used.

Alert/Lockout Codes (Red LED Flash Code):

- Code 1 – Motor High Temperature: The module will flash the red Alert LED one time indicating the motor PTC circuit has exceeded 4500 Ω. A Code 1 Alert will open the M2-M1 contacts. The Alert will reset after 30 minutes and the M2-M1 contacts will close if the resistance of the motor PTC circuit is below 2750 Ω. Five consecutive Code 1 Alerts will lock out the compressor. Once the module has locked out the compressor, a power cycle will be required for the lockout to be cleared.

- Code 2 – Open/Shorted Motor Thermistor: The module will flash the red Alert LED 2 times indicating the motor PTC thermistor circuit has a resistance value greater than 220 Ω or less than 100 Ω that indicates an open/shorted thermistor chain. A Code 2 Alert will open the M2-M1 contacts. The Alert will reset after 30 minutes and the M2-M1 contacts will close if the resistance of the motor PTC circuit is back in the normal range. The module will lock out the compressor if the trip condition exists for longer than 6 hours. Once the module has locked out the compressor, a power cycle will be required to clear the lockout.
- Code 3 – Short Cycling: The module will flash the red Alert LED 3 times indicating the compressor is locked out due to short cycling. A Code 3 Alert will open the M2-M1 contacts. Code 3 will be enabled when the Short Cycling DIP switch (no. 10) is ON (in the up position) and the compressor has exceeded the number of short cycles configured by the user in a 24-hour period. Once the module has locked out the compressor, a power cycle will be required to clear the lockout.
- Code 4 – Scroll High Temperature: The module will flash the red Alert LED 4 times indicating the scroll NTC circuit is less than 2400 Ω. A Code 4 Alert will open the M2-M1 contacts. The Alert will reset after 30 minutes and the M2-M1 contacts will close if the resistance of the scroll NTC circuit is higher than 5100 Ω. The module will lock out the compressor if the number of Code 4 Alerts exceeds the user configurable number of Code 4 events within a 24-hour period. Once the module has locked out the compressor, a power cycle will be required to clear the lockout.
- Code 5 – Not used.
- Code 6 – Missing Phase: The module will flash the red Alert LED 6 times indicating a missing phase in one of the three leads to the compressor. A Code 6 Alert will open the M2-M1 contacts. The Alert will reset after 5 minutes and the M2-M1 contacts will close if the missing phase condition is not present. The module will lock out the compressor after 10 consecutive Code 6 Alerts. Once the module has locked out the compressor, a power cycle will be required to clear the lockout.
- Code 7 – Reverse Phase: The module will flash the red Alert LED 7 times indicating a reverse phase in two of the three leads to the compressor. A Code 7 Alert will open the M2-M1 contacts. The module will lock out the compressor after one Code 7 Alert. A power cycle will be required to clear the lockout.
- Code 8 – Not used.
- Code 9 – Module Low Voltage: The module will flash the red Alert LED 9 times indicating low module voltage, less than 18 vac on the T2-T1 terminals for more than 5 seconds. A Code 9 Alert will open the M2-M1 contacts. The Alert will reset after 5 minutes and the M2-M1 contacts will close if the T2-T1 voltage is above the reset value in 18 to 30 vac.

Resetting Alert codes can be accomplished manually by cycling power to the module (disconnect T2 or T1 for 5 seconds). If the fault that initiated the Alert code is absent after the reset is performed, the Alert code will be cleared and CoreSense module will allow normal operation. If the fault is still present after the reset is performed, the fault code will continue to be displayed via the green or red flashing LED.

Troubleshooting procedures described for the Kriwan module section (60) are applicable to the CoreSense communication module.

Table 54 — CoreSense Communication Module DIP Switch Settings

COPELAND ELECTRICAL CODE	DIP SWITCH									
	1	2	3	4	5	6	7	8	9	10
"TE"	ON	OFF	OFF	OFF	OFF	OFF	OFF	OFF	ON	OFF
"TW"*	ON	OFF	OFF	OFF	OFF	OFF	OFF	OFF	OFF	OFF

*Settings for Kriwan retrofit. See "CoreSense Replacement of Kriwan Motor Protection Module" on 61.

Table 55 — CoreSense Communication Module LED Flash Codes

LED STATUS	FAULT CONDITION	FAULT CODE DESCRIPTION	FAULT CODE RESET	TROUBLESHOOTING INFORMATION
SOLID GREEN	None, normal operation	Module is powered and under normal operation	Not applicable	None
SOLID RED	Module malfunction	Module has an internal fault	Not applicable	1. Reset module by removing power from T1-T2. 2. Replace module.
WARNING LED FLASH				
GREEN FLASH CODE 1	Loss of communication	Module and Master Controller have lost communications with each other for more than 5 minutes	Automatic when communications are re-established	Not Supported. Check DIP Switch settings.
GREEN FLASH CODE 2	Not used	Not applicable	Not applicable	Not applicable
GREEN FLASH CODE 3	Short cycling	Run time of less than 1 minute. Number of short cycles exceeds 48 in a 24-hour period.	Fewer than 48 short cycles in 24 hours	30MP controls do not allow this operation normally. Confirm proper wiring and DIP switch settings.
GREEN FLASH CODE 4	Open/Shorted Scroll Thermistor	Not applicable	Not applicable	Not applicable
GREEN FLASH CODE 5	Not used	Not applicable	Not applicable	Not applicable
ALERT/LOCKOUT LED FLASH				
RED FLASH CODE 1	High motor temperature	Thermistor resistance greater than 4500 Ω. Lockout occurs after 5 alerts.	Thermistor resistance less than 2750 Ω and 30 minutes have elapsed	1. Check power supply. 2. Check system charge and superheat. 3. Check compressor contactor.
RED FLASH CODE 2	Open/shorted motor thermistor	Thermistor resistance greater than 4500 Ω, or less than 100 Ω. Lockout occurs after 6 hours.	Thermistor resistance is between 100 and 2750 Ω and 30 minutes have elapsed	1. Check for poor connections at module and thermistor fusite. 2. Check continuity of thermistor wiring harness. 3. Check for an open thermistor circuit.
RED FLASH CODE 3	Short cycling	Run time of less than 1 minute. Lockout if the number of alerts exceeds the number configured by the user in 24 hours.	Interrupt power to T2-T1	30MP controls do not allow this operation normally. Confirm proper wiring.
RED FLASH CODE 4	Scroll high temperature	Not applicable	Not applicable	Not applicable
RED FLASH CODE 5	Not used	Not applicable	Not applicable	Not applicable
RED FLASH CODE 6	Missing phase	Missing phase detected. Lockout after 10 consecutive alerts.	After 5 minutes and missing phase condition is not present	1. Check incoming power. 2. Check fuses or circuit breakers. 3. Check compressor contactor.
RED FLASH CODE 7	Reverse phase	Reverse phase detected. Lockout after 1 alert.	Interrupt power to T2-T1	1. Check incoming power phase sequence. 2. Check compressor contactor. 3. Check module phase wiring A-B-C.
RED FLASH CODE 8	Not used	Not applicable	Not applicable	Not applicable
RED FLASH CODE 9	Module low voltage	Less than 18 vac supplied to module	After 5 minutes and voltage is between 18 and 30 vac	This alert does not result in a lockout fault. 1. Verify correct 24 vac module is installed. 2. Check for a wiring error.

BITZER PROTECTION MODULE — The 30MP unit sizes 050-071 use Bitzer compressors, which are equipped with 24V Lodam motor protection modules. See Fig. 44. The module opens the relay contact in the control circuit and locks out immediately if the motor temperature exceeds the preset limit. If a lockout occurs the compressor must cool to ambient temperature and the unit alarm must be cleared manually before the compressor will restart.

⚠ CAUTION

Do not apply external voltage to orange instrument leads, even for test purposes. Damage to the Lodam protection device may result.

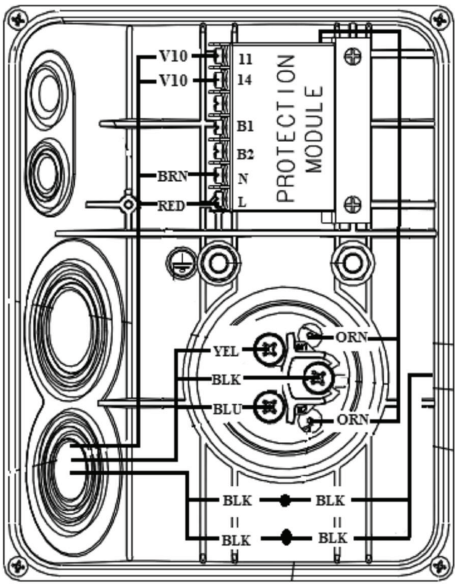

Fig. 44 — External Motor Protection Module, 30MP050-071 Units

FIELD TROUBLESHOOTING SOLID-STATE MOTOR PROTECTION MODULE — Follow the steps listed below to troubleshoot the module in the field. See wiring diagram in Fig. 3 and Fig. 5 or in terminal box cover.

1. De-energize control circuit and module power. Remove the control circuit wires from the module (Terminals M1 and M2 or L and N). Connect a jumper across these "control circuit" wires. This will bypass the "control contact" of the module.

   Re-energize the control circuit and module power. If the compressor will not operate with the jumper installed, then the problem is external to the solid-state protection system.

   If the compressor operates with the module bypassed but will not operate when the module is reconnected, then the control circuit relay in the module is open. The thermistor protection chain now needs to be tested to determine if the module's control circuit relay is open due to excessive internal temperatures or a faulty component.

⚠ CAUTION

The motor protection system within the compressor is now bypassed. Use this configuration to temporarily test module only. Failure to do this may result in unit damage.

2. Check the thermistor protection chain located in the compressor as follows:
   a. De-energize control circuit and module power.
   b. Remove the sensor leads from the module (S1 and S2 or 11 and 14). Measure the resistance of the thermistor protection chain through these sensor leads with an ohmmeter.

IMPORTANT: Use an ohmmeter with a maximum of 9 volts to check the sensor chain. The sensor chain is sensitive and easily damaged; no attempt should be made to check continuity through it with anything other than an ohmmeter. The application of any external voltage to the sensor chain may cause damage requiring the replacement of the compressor.

The diagnosis of this resistance reading is as follows:

- 200 to 2250 ohms - Normal operating range
- 2750 ohms or greater - Compressor overheated - Allow time to cool
- Zero resistance - Shorted sensor circuit - Replace the compressor
- Infinite resistance - Open sensor circuit - Replace the compressor

Motor Protector PTC Key Values	
Normal PTC resistance:	**250 to 2250 Ohms**
Trip resistance:	**>4500 Ohm ± 20%**
Reset resistance:	**<2750 Ohm ± 20%**

If the resistance reading is abnormal, remove the sensor connector plug from the compressor and measure the resistance at the sensor fusite pins. This will determine if the abnormal reading was due to a faulty connector. On initial start-up, and after any module trip, the resistance of the sensor chain must be below the module reset point before the module circuit will close. Reset values are 2250 to 3000 ohms.

3. If the sensor chain has a resistance that is below 2250 ohms, and the compressor will run with the control circuit bypassed, but will not run when connected properly, the solid-state module is defective and should be replaced. The replacement module must have the same supply voltage rating as the original module.

Alarms and Alerts — These are warnings of abnormal or fault conditions, and may cause either one circuit or the whole unit to shut down. They are assigned code numbers as described in Table 56.

Automatic alarms will reset without operator intervention if the condition corrects itself. The following method must be used to reset manual alarms:

Before resetting any alarm, first determine the cause of the alarm and correct it. Enter the Alarms mode indicated by the LED on the side of the scrolling marquee display. Press ENTER and ▼ until the sub-menu item RCRN "RESET ALL CURRENT ALARMS" is displayed. Press ENTER. The control will prompt the user for a password, by displaying PASS and WORD. Press ENTER to display the default password, 1111. Press ENTER for each character. If the password has been changed, use the arrow keys to change each individual character. Toggle the display to "YES" and press ENTER. The alarms will be reset.

Table 56 — Alarm and Alert Codes

ALARM/ ALERT CODE	ALARM OR ALERT	DESCRIPTION	WHY WAS THIS ALARM GENERATED?	ACTION TAKEN BY CONTROL	RESET METHOD	PROBABLE CAUSE
A048	Alarm	Circuit A Compressor Availability Alarm	Two compressors on circuit failed	Circuit shut down	Manual	See applicable compressor alarm.
T051	Alert	Circuit A, Compressor 1 Failure	Compressor feedback signal does not match relay state	Compressor A1 shut down.	Manual	High-pressure switch open, faulty CSB, loss of condenser flow, filter drier plugged, non-condensables, operation beyond capability, motor protection module open.
A051	Alarm	Circuit A, Compressor 1 Stuck on Failure	Respective current sensor board (CSB) feedback signal is ON when the compressor should be off	All compressor outputs de-energized. 30MPA head pressure routine remains active.	Manual	Welded contactor, welded control relay on MBB, wiring error, faulty CSB.
T052	Alert	Circuit A, Compressor 2 Failure	Compressor feedback signal does not match relay state	Compressor A2 shut down.	Manual	High-pressure switch open, faulty CSB, loss of condenser flow, filter drier plugged, non-condensables, operation beyond capability, motor protection module open.
A052	Alarm	Circuit A, Compressor 2 Stuck on Failure	Respective current sensor board (CSB) feedback signal is ON when the compressor should be off	All compressor outputs de-energized. 30MPA head pressure routine remains active.	Manual	Welded contactor, welded control relay on MBB, wiring error, faulty CSB.
T053	Alert	Circuit A, Compressor 3 Failure	Compressor feedback signal does not match relay state	Compressor A3 shut down.	Manual	High-pressure switch open, faulty CSB, loss of condenser flow, filter drier plugged, non-condensables, operation beyond capability, motor protection module open.
A053	Alarm	Circuit A, Compressor 3 Stuck on Failure	Respective current sensor board (CSB) feedback signal is ON when the compressor should be off	All compressor outputs de-energized. 30MPA head pressure routine remains active.	Manual	Welded contactor, welded control relay on MBB, wiring error, faulty CSB.
A060	Alarm	Cooler Leaving Fluid Thermistor Failure	Thermistor outside range of –40 to 245 F (–40 to 118 C)	Chiller shut down immediately	Automatic	Thermistor failure, damaged cable/wire or wiring error.
A061	Alarm	Cooler Entering Fluid Thermistor Failure	Thermistor outside range of –40 to 245 F (–40 to 118 C)	Chiller shut down immediately	Automatic	Thermistor failure, damaged cable/wire or wiring error.
T062	Alert	Condenser Leaving Fluid Thermistor Failure	Thermistor outside range of –40 to 245 F (–40 to 118 C)	Alert only. No action taken.	Automatic	Thermistor failure, damaged cable/wire or wiring error.
T063	Alert	Condenser Entering Fluid Thermistor Failure	Thermistor outside range of –40 to 245 F (–40 to 118 C)	Alert only. No action taken.	Automatic	Thermistor failure, damaged cable/wire or wiring error.
T068	None	Circuit A Return Gas Thermistor Failure	If return gas sensors are enabled (RG.EN) and thermistor is outside range of –40 to 245 F (–40 to 118 C)	Circuit A shut down	Automatic	Thermistor failure, damaged cable/wire or wiring error.
T073	Alert	Outside Air Thermistor Failure	Thermistor outside range of –40 to 245 F (–40 to 118 C) (if enabled)	Temperature reset disabled. Chiller runs under normal control/set points.	Automatic	Thermistor failure, damaged cable/wire or wiring error.
T074	Alert	Space Temperature/Dual Chiller Thermistor Failure	Thermistor outside range of –40 to 245 F (–40 to 118 C) (if enabled)	Temperature reset disabled. Chiller runs under normal control/set points.	Automatic	Thermistor failure, damaged cable/wire or wiring error.
A077	Alarm	Circuit A Saturated Suction Temperature exceeds Cooler Leaving Fluid Temperature	Faulty expansion valve, suction pressure transducer or leaving fluid thermistor.	Circuit A shut down.	Manual	Faulty expansion valve suction pressure transducer or leaving fluid thermistor.
T079	Alert	Lead/Lag LWT Thermistor Failure	Thermistor outside range of –40 to 245 F (–40 to 118 C)	Chiller runs as a stand alone machine	Automatic	Dual LWT thermistor failure, damaged cable/wire or wiring error.
A090	Alarm	Circuit A Discharge Pressure Transducer Failure	Outside of range (0 to 667 psig)	Circuit A shut down	Automatic	Transducer failure, poor connection to MBB, or wiring damage/error.
A092	Alarm	Circuit A Suction Pressure Transducer Failure	Outside of range (0 to 420 psig)	Circuit A shut down	Automatic	Transducer failure, poor connection to MBB, or wiring damage/error.
T094	Alert	Discharge Gas Thermistor Failure	Discharge thermistor (DTT) is either open or shorted outside of range –39.9 to 356 F (–39.9 to 180 C)	Digital compressor shut down.	Automatic	Thermistor failure, damaged cable/wire or wiring error.
A110	Alarm	Circuit A Loss of Charge	If the compressors are off and discharge pressure reading is < 26 psig for 30 sec.	Circuit not allowed to start.	Manual	Refrigerant leak or transducer failure
A112	Alarm	Circuit A High Saturated Suction Temperature	Circuit saturated suction temperature pressure transducer > 70 F (21.1 C) for 5 minutes	Circuit shut down	Manual	Faulty expansion valve, faulty suction pressure transducer or high entering fluid temperature.
A114	Alarm	Circuit A Low Suction Superheat	Suction superheat is less than 5° F (2.8 C) for 5 minutes. (if RGT installed)	Circuit A shut down.	Automatic restart after first daily occurrence. Manual restart thereafter.	Faulty expansion valve, faulty suction pressure transducer, faulty suction gas thermistor, circuit overcharged

See legend on page 69.

Table 56 — Alarm and Alert Codes (cont)

ALARM/ ALERT CODE	ALARM OR ALERT	DESCRIPTION	WHY WAS THIS ALARM GENERATED?	ACTION TAKEN BY CONTROL	RESET METHOD	PROBABLE CAUSE
A116	Alarm	Circuit A Low Cooler Suction Temperature	Mode 7 caused the compressor to unload 3 consecutive times with less than a 30-minute interval between each circuit shutdown.	Circuit shut down	Manual	Faulty expansion valve, low refrigerant charge, plugged filter drier, faulty suction pressure transducer, low cooler fluid flow
P118	Pre-Alert	High Discharge Gas Temperature	Digital compressor enabled (A1.TY) and discharge gas temperature greater than 268 F (131.1 C)	This is a non-broadcast alarm. Compressor A1 is shut down.	Automatic, when discharge temperature is less than 250 F (121.1 C).	Circuit overcharged, faulty discharge temperature thermistor
T118	Alert	High Discharge Gas Temperature	Digital compressor enabled (A1.TY) and discharge gas temperature greater than 268 F (131.1 C)	Compressor A1 is shut down.	Manual	Circuit overcharged, faulty discharge temperature thermistor
A122	Alarm	High Pressure Switch Trip Circuit A	High Pressure A Switch Input open to MBB	Circuit shut down	Manual	Faulty transducer/high pressure switch.
A126	Alarm	Circuit A High Head Pressure	SCT >Maximum condensing temperature from operating envelope Operation outside compressor operating envelope	Circuit shut down	Automatic, only after first 3 daily occurrences. Manual reset thereafter. SCT must drop 5 F (2.8 C) before restart	Plugged filter drier unit operating outside of range. Faulty transducer/high pressure switch overcharged, low/ restricted condenser airflow (30MPA) low or loss of condenser flow (30MPW), fouled condenser (30MPW), faulty EXV.
A133	Alarm	Circuit A Low Suction Pressure	Suction pressure below 34 psig for 8 seconds or below 23 psig	Circuit shut down	Automatic restart after first daily occurrence. Manual restart thereafter.	Faulty or plugged TXV or EXV, low refrigerant charge, TXV out of adjustment, liquid line valve partially closed. Plugged filter drier. Low cooler flow.
A140	Alert	Reverse Rotation Detected	Incoming chiller power leads not phased correctly	Chiller not allowed to start.	Manual	Reverse any two incoming power leads to correct. Check for correct fan rotation first.
A150	Alarm	Emergency Stop	CCN emergency stop command received	Chiller shut down.	Automatic once CCN command for EMSTOP returns to normal	CCN Network command.
A151	Alarm	Illegal Configuration	One or more illegal configurations exists.	Chiller is not allowed to start.	Manual once configuration errors are corrected	Configuration error. Check unit settings.
A152	Alarm	Unit Down Due to Failure	Both circuits are down due to alarms/alerts.	Chiller is unable to run.	Automatic once alarms/alerts are cleared that prevent the chiller from starting.	Alarm notifies user that chiller is 100% down.
T153	Alert	Real Time Clock Hardware Failure	Internal clock on MBB fails	Occupancy schedule will not be used. Chiller defaults to Local On mode.	Automatic when correct clock control restarts.	Time/Date/Month/ Day/Year not properly set.
A154	Alarm	Serial EEPROM Hardware Failure	Hardware failure with MBB	Chiller is unable to run.	Manual	Main Base Board failure.
T155	Alert	Serial EEPROM Storage Failure	Configuration/storage failure with MBB	No Action	Manual	Potential failure of MBB. Download current operating software. Replace MBB if error occurs again.
A156	Alarm	Critical Serial EEPROM Storage Failure	Configuration/storage failure with MBB	Chiller is not allowed to run.	Manual	Main Base Board failure.
A157	Alarm	A/D Hardware Failure	Hardware failure with peripheral device	Chiller is not allowed to run.	Manual	Main Base Board failure.
A172	Alarm	Loss of Communication with EXV Board	MBB loses communication with EXV board	Chiller is not allowed to run.	Automatic	Wiring error, faulty wiring or failed EXV board.
T173	Alert	Loss of Communication with EMM	MBB loses communication with EMM	4 to 20 mA temperature reset disabled. Demand Limit set to 100%. 4 to 20 mA set point disabled.	Automatic	Wiring error, faulty wiring or failed Energy Management Module (EMM).
T174	Alert	4 to 20 mA Cooling Set Point Input Failure	If configured with EMM and input less than 2 mA or greater than 22 mA	Set point function disabled. Chiller controls to CSP1.	Automatic	Faulty signal generator, wiring error, or faulty EMM.
A175	Alarm	Loss of Communication with AUX Board	MBB losses communication with AUX board	Digital control is disabled.	Automatic	Wiring error, faulty wiring, failed AUX board, ditital option enabled, Configuration→Unit→AI.TY=YES
T176	Alert	4 to 20 mA Temperature Reset Input Failure	If configured with EMM and input less than 2 mA or greater than 22 mA	Reset function disabled. Chiller returns to normal set point control.	Automatic	Faulty signal generator, wiring error, or faulty EMM.

See legend on page 69.

Table 56 — Alarm and Alert Codes (cont)

ALARM/ ALERT CODE	ALARM OR ALERT	DESCRIPTION	WHY WAS THIS ALARM GENERATED?	ACTION TAKEN BY CONTROL	RESET METHOD	PROBABLE CAUSE
T177	Alert	4 to 20 mA Demand Limit Input Failure	If configured with EMM and input less than 2 mA or greater than 22 mA	Demand limit function disabled. Chiller returns to 100% demand limit control.	Automatic	Faulty signal generator, wiring error, or faulty EMM.
P200	Pre-Alert	Coder Flow/Interlock Contacts Failed to Close at Start-Up	Cooler flow switch contacts failed to close within 1 minute (if cooler pump control is enabled) or within 5 minutes (if cooler pump control is not enabled) after start-up	Chiller not allowed to start.	Manual	No chilled water flow. Faulty flow switch or interlock. Wiring error.
T200	Alert	Cooler Flow/Interlock Contacts failed to Close at start-up	Cooler flow switch contacts failed to close within 1 minute (if cooler pump control is enabled) or within 5 minutes (if cooler pump control is not enabled) after start-up	Chiller not allowed to start.	Manual	No chilled water flow. Faulty flow switch or interlock. Wiring error.
P201	Pre-Alert	Cooler Flow/Interlock Contacts Opened During Normal Operation	Flow switch opens for at least 3 seconds after being initially closed	All compressors shut down.	Manual	Cooler pump failure, faulty flow switch or interlock. Wiring error.
A201	Alarm	Cooler Flow/Interlock Contacts Opened During Normal Operation	Flow switch opens for at least 3 seconds after being initially closed	All compressors shut down.	Manual	Cooler pump failure, faulty flow switch or interlock. Wiring error.
A202	Alarm	Cooler Pump Interlock Closed When Pump is Off	If configured for cooler pump control and flow switch input is closed for 5 minutes while pump output(s) are off	Chiller not allowed to start	Automatic when aux contacts open	Wiring error, faulty pump contactor (welded contacts)
T203	Alert	Loss of Communication with slave chiller	Master chiller MBB loses communication with slave chiller MBB	Dual chiller control disabled. Chiller runs as a stand-alone machine.	Automatic	Wiring error, faulty wiring, failed Slave chiller MBB module, power loss at slave chiller, wrong slave address.
T204	Alert	Loss of Communication with master chiller	Slave chiller MBB loses communication with master chiller MBB	Dual chiller control disabled. Chiller runs as a stand-alone machine	Automatic	Wiring error, faulty wiring, failed master chiller MBB module, power loss at Master chiller.
T205	Alert	Master and slave chiller with same address	Master and slave chiller have the same CCN address (CCN.A)	Dual chiller routine disabled. Master/slave run as stand-alone chillers.	Automatic	CCN Address for both chillers is the same. Must be different. Check CCN.A under the OPT2 sub-mode in Configuration at both chillers.
T206	Alert	High Leaving Chilled Water Temperature	LWT read is greater than LCW Alert Limit, Total capacity is 100% and LWT is greater than LWT reading one minute ago	Alert only. No action taken.	Automatic	Building load greater than unit capacity, low water/brine flow or compressor fault. Check for other alarms/alerts.
A207	Alarm	Cooler Freeze Protection	Cooler EWT or LWT is less than Brine Freeze (BR.FZ)	Chiller shut down without going through pumpdown. Cooler pump continues to run a minimum of 5 minutes (if control enabled).	Both EWT and LWT must be at least 6 F (3.3 C) above Brine Freeze point (BR.FZ). Automatic for first, Manual reset there after.	Faulty thermistor (T1/T2), low water flow.
A208	Alarm	EWT or LWT Thermistor failure	Cooler EWT is less than LWT by 3° F (1.7° C) for 1 minute after a circuit is started	Chiller shut down. Cooler pump shut off (if control enabled).	Manual	Reverse flow faulty thermistor, miswired thermistor
A220	Alarm	Condenser Pump Interlock Failure to Close at Start-Up	If configured for condenser pump interlock and the flow switch input fails to close within 5 minutes after start-up. Also valid when configured for condenser pump control.	Condenser and cooler pumps shut off. Chiller shut down	Manual	Failure of condenser pump or controls. Wiring error.
P221	Pre-Alert	Condenser Pump Interlock Opened During Normal Operation	If configured for condenser pump interlock and the flow switch opens for 15 seconds during normal operation (or when the condenser pump relay is on when condenser pump control is configured.)	Condenser and cooler pumps shut off. Chiller shut down	Manual	Failure of condenser pump or controls. Wiring error.

See legend on page 69.

Table 56 — Alarm and Alert Codes (cont)

ALARM/ ALERT CODE	ALARM OR ALERT	DESCRIPTION	WHY WAS THIS ALARM GENERATED?	ACTION TAKEN BY CONTROL	RESET METHOD	PROBABLE CAUSE
A221	Alarm	Condenser Pump Interlock Opened During Normal Operation	If configured for condenser pump interlock and the flow switch opens for 15 seconds during normal operation (or when the condenser pump relay is on when condenser pump control is configured.)	Condenser and cooler pumps shut off. Chiller shut down	Manual	Failure of condenser pump or controls. Wiring error.
A222	Alarm	Condenser Pump Interlock Closed When Pump is Off	If configured for condenser pump interlock condenser pump control, and the flow switch is closed when pump relay is off.	Chiller is not allowed to start.	Manual	Failure of condenser pump relays or interlocks, welded contacts.
T302	Alert	Strainer Blowdown Scheduled Maintenance Due	Strainer Service Countdown (S.T.DN) expired. Complete strainer blowdown and enter 'YES' for Strainer Maintenance Done (S.T.MN) item.	None	Automatic	Routine strainer maintenance required
T500	Alert	Current Sensor Board A1 Failure	Alert occurs when CSB output is a constant high value	Compressor A1 shut down	Automatic	CSB failure.
T501	Alert	Current Sensor Board A2 Failure	Alert occurs when CSB output is a constant high value	Compressor A2 shut down	Automatic	CSB failure.
T502	Alert	Current Sensor Board A3 Failure	Alert occurs when CSB output is a constant high value	Compressor A3 shut down	Automatic	CSB failure.
T950	Alert	Loss of Communication with Water System Manager	No communications have been received by the MBB within 5 minutes of last transmission	WSM forces removed. Chiller runs under own control	Automatic	Failed module, wiring error, failed transformer, loose connection plug, wrong address
A951	Alarm	Loss of Communication with Chillervisor System Manager	No communications have been received by the MBB within 5 minutes of last transmission	CSM forces removed. Chiller runs under own control	Automatic	Failed module, wiring error, failed transformer, loose connection plug, wrong address

LEGEND

CCN — Carrier Comfort Network
CSB — Current Sensor Board
CSM — Chiller System Manager
EEPROM — Electronic Eraseable Programmable Read Only Memory
EMM — Energy Management Module
EWT — Entering Fluid Temperature
EXV — Electronic Expansion Valve
LCW — Leaving Chilled Water
LWT — Leaving Fluid Temperature
MBB — Main Base Board
RGT — Return Gas Temperature
SCT — Saturated Condenser Temperature
TXV — Thermostatic Expansion Valve
WSM — Water System Manager

COMPRESSOR FAILURE ALERTS

A048 (Circuit A Compressor Availability Alarm) — This alarm occurs when two compressors are unavailable to run on a 3-compressor circuit. The control ensures proper oil return by ensuring a circuit does not operate with one compressor for longer than one hour of cumulative run time.

T051, T052, T053 (Circuit A Compresser Failures) — Alert codes 051, 052, and 053 are for compressors A1, A2, and A3 respectively. These alerts occur when the current sensor (CS) does not detect compressor current during compressor operation. When this occurs, the control turns off the compressor.

If the current sensor board reads OFF while the compressor relay has been commanded ON, an alert is generated.

POSSIBLE CAUSES

Compressor Overload — Either the compressor internal overload protector is open or the external overload protector (Kriwan, Copeland CoreSense, or Lodam module) has activated. The external overload protector modules are mounted in the compressor wiring junction box. Temperature sensors embedded in the compressor motor windings are the inputs to the module. The module is powered with 24 vac from the units main control box. The module output is a normally closed contact that is wired in series with the compressor contactor coil. In a compressor motor overload condition, contact opens, deenergizing the compressor contactor.

Low Refrigerant Charge — If the compressor operates for an extended period of time with low refrigerant charge, the compressor ASTP device will open, which will cause the compressor to trip on its overload protection device.

Circuit Breaker Trip — The compressors are protected from short circuit by a breaker in the control box.

Wiring Error — A wiring error might not allow the compressor to start.

To check out alerts T051-T053:

1. Turn on the compressor in question using Service Test mode. If the compressor does not start, then most likely the problem is one of the following: HPS open, open internal protection, circuit breaker trip, incorrect safety wiring, incorrect compressor wiring or incorrect Copeland CoreSense internal phase monitor wiring.
2. If the compressor does start, verify it is rotating in the correct direction.

IMPORTANT: Prolonged operation in the wrong direction can damage the compressor. Correct rotation can be verified by a gage set and looking for a differential pressure rise on start-up.

IMPORTANT: If the CS is always detecting current, verify that the compressor is on. If the compressor is on, check the contactor and the relay on the MBB. If the compressor is off and there is no current, verify the CSB wiring and replace if necessary.

IMPORTANT: Return to Normal mode and observe compressor operation to verify that compressor current sensor is working.

COMPRESSOR STUCK ON FAILURE ALARMS

Circuit A A051, A052, A053 — Alarm codes 051, 052, and 053 are for compressors A1, A2, and A3. These alarms occur when the CSB detects current when the compressor should be off. When this occurs, the control turns off the compressor.

If the current sensor board reads ON while the compressor relay has been commanded OFF for a period of 4 continuous seconds, an alarm is generated. These alarms are only monitored for a period of 10 seconds after the compressor relay has been commanded OFF. This is done to facilitate a service technician forcing a relay to test a compressor.

In addition, if a compressor stuck failure occurs and the current sensor board reports the compressor and the request off, certain diagnostics will take place as follows:

1. If any of the compressors are diagnosed as stuck on and the current sensor board is on and the request is off, the control will command the condenser fans to maintain normal head pressure.
2. The control will shut-off all other compressors.

   The possible causes include welded contactor or frozen compressor relay on the MBB.

To check out alarms A051 to A053:

1. Place the unit in Service Test mode. All compressors should be off.
2. Verify that there is not 24-v at the contactor coil. If there is 24 v at the contactor, check relay on MBB and wiring.
3. Check for welded contactor.
4. Verify CSB wiring.
5. Return to Normal mode and observe compressor operation to verify that compressor current sensor is working and condenser fans are energized.

A060 (Cooler Leaving Fluid Thermistor Failure) — If the sensor reading is outside the range of –40 to 240 F (–40 to 116 C) then the alarm will occur. The cause of the alarm is usually a faulty thermistor, a shorted or open thermistor caused by a wiring error, or a loose connection. Failure of this thermistor will shut down the entire unit.

A061 (Cooler Entering Thermistor Failure) — If the sensor reading is outside the range of –40 to 240 F (–40 to 116 C) then the alarm will occur. The cause of the alarm is usually a faulty thermistor, a shorted or open thermistor caused by a wiring error, or a loose connection. Failure of this thermistor will shut down the entire unit.

T062 (Condenser Leaving Fluid Thermistor Failure) — If the sensor reading is outside the range of –40 to 240 F (–40 to 116 C) then the alert will occur. The cause of the alert is usually a faulty thermistor, a shorted or open thermistor caused by a wiring error, or a loose connection. Failure of this thermistor will send out an alert only.

T063 (Condenser Entering Thermistor Failure) — If the sensor reading is outside the range of –40 to 240 F (–40 to 116 C) then the alert will occur. The cause of the alert is usually a faulty thermistor, a shorted or open thermistor caused by a wiring error, or a loose connection. Failure of this thermistor will send out an alert only.

T068 (Circuit A Compressor Return Gas Temperature Thermistor Failure) — This alert occurs if the RGT is configured and the compressor return gas temperature sensor is outside the range of –40 to 240 F (–40 to 116 C). Failure of this thermistor will shut down the appropriate circuit.

T073 (Outside Air Temperature Thermistor Failure) — This alert occurs when the outside air temperature sensor is outside the range of –40 to 240 F (–40 to 116 C). Failure of this thermistor will disable any elements of the control which requires its use. The OAT must be configured.

T074 (Space Temperature Thermistor Failure) — This alert occurs when the space temperature sensor is outside the range of –40 to 240 F (–40 to 116 C). Failure of this thermistor will disable any elements of the control which requires its use. The cause of the alert is usually a faulty thermistor in the T55 or T58 device, a shorted or open thermistor caused by a wiring error, or a loose connection. The SPT must be configured.

A077 (Circuit Saturated Suction Temperature Exceeds Cooler Leaving Water Temperature) — This alarm occurs when the saturated suction temperature (SST) is greater than leaving water for 5 minutes. This alarm will occur if either the suction pressure transducer reading, which is used to calculate SST, or cooler leaving water is incorrect. Potential causes for this alarm are loose wiring connection, sensor not located in well, or bad Schrader fitting. Reset is manual.

T079 (Dual Chiller Thermistor Failure) — This alert occurs when the dual chiller temperature sensor is outside the range of –40 to 240 F (–40 to 116 C). Failure of this thermistor will disable dual chiller operation and return to stand-alone operation. The unit must be configured for dual chiller operation for this alert to occur. The cause of the alert is usually a faulty thermistor, a shorted or open thermistor caused by a wiring error, or a loose connection. Reset is automatic.

A090 (Circuit A Discharge Pressure Transducer Failure) — This alarm occurs when the pressure is outside the range of 0.0 to 667.0 psig (0.0 to 4599 kPag). A circuit cannot run when this alarm is active. Use the scrolling marquee to reset the alarm. The cause of the alarm is usually a faulty transducer, faulty 5-v power supply, or a loose connection.

A092 (Circuit A Suction Pressure Transducer Failure) — This alarm occurs when the pressure is outside the range of 0.0 to 420.0 psig (0.0 to 2896 kPag). A circuit cannot run when this alarm is active. Use the scrolling marquee to reset the alarm. The cause of the alarm is usually a faulty transducer, faulty 5-v power supply, or a loose connection.

T094 (Discharge Gas Thermistor Failure) — This alert occurs for units which have the digital compressor installed on circuit A. If discharge gas temperature is open or shorted, the circuit will be shut off. The valid range for this thermistor is –39.9 to 356 F (–39.9 to 180 C). The alert will reset itself when discharge temperature is less than 250 F (121.1 C). The cause of the alert is usually low refrigerant charge or a faulty thermistor.

A110 (Circuit A Loss of Charge) — This alarm occurs when the compressor is OFF and the discharge pressure is less than 26 psig (179.2 kPa).

A112 (Circuit A High Saturated Suction Temperature) — Alarm code 112 occurs when compressors in a circuit have been running for at least 5 minutes and the circuit saturated suction temperature is greater than 70 F (21.1 C). The high saturated suction alarm is generated and the circuit is shut down.

A114 (Circuit A Low Superheat) — Alarm code 114 occurs when the superheat of a circuit is less than 5 F (2.8 C) for 5 continuous minutes. The low superheat alarm is generated and the circuit is shut down. The RGT sensor must be installed.

A116 (Circuit A Low Cooler Suction Temperature) — Alarm code 116 occurs when mode 7 causes the compressor to unload 3 consecutive times in less than 30-minute intervals between each circuit shutdown. The low cooler suction temperature alarm is generated and the circuit is shut down. If this condition is encountered, check the following items:

- Check for a faulty expansion valve.
- Check for a plugged filter drier.
- Check for a low refrigerant charge condition.
- Check the suction pressure transducer for accuracy.
- Check the cooler flow rate.
- Check the chilled water strainer for a restriction.
- Consider a fouled cooler.
- Check the glycol concentration in the loop; high glycol concentrations can cause the same effect as a fouled cooler.
- Check that the water flow is in the proper direction.

P118 — High Discharge Gas Temperature

T118 — High Discharge Gas Temperature

Criteria for Trip: This alert is part of the compressor protection algorithm for digital compressor units. The following conditions must be true:

1. This alert will be triggered if the unit has a digital compressor and it is enabled (***Configuration→UNIT→A1.TY=YES***).
2. The discharge gas temperature (***Temperatures→CIR.A→D.GAS***) is greater than 268 F (131.1 C).

Action To Be Taken: Compressor A1 is shut down. If this is the first or second occurrence within a 32-minute window, the pre-alert P118 will be generated. This is a non-broadcast alert. If this is the third occurrence within the 32-minute window, the alert T118 is generated.

Reset Method: The first two times compressor A1 is shut down due to the pre-alert P118, the pre-alert will automatically reset after the discharge temperature is less than 250 F (121.1 C) and the compressor will restart. The third occurrence will result in the alert T118 and will require a manual reset.

Multiple P118 pre-alerts may be stored in the alarm history. If there are 1 or 2 strikes on the circuit and the circuit recovers for a period of time, it is possible to clear out the strikes, thereby resetting the strike counter automatically.

Possible Causes: If this condition is encountered, check the following items:

- Check to be sure that the circuit is properly charged. If a leak is found, repair the leak and recharge the circuit.
- Check the discharge temperature thermistor (DTT) for accuracy.
- Check the discharge temperature thermistor (DTT) connections.
- Check unit configuration. ***A1.TY = NO*** if no digital compressor is installed.

A122 (Circuit A, High Pressure Switch Failure) — The high-pressure switch is wired in series with the compressor contactor coils of each compressor on the circuit to disable compressor operation immediately upon a high discharge pressure condition.

For all 30MP015-045, 30MPA050-071, and 30MP050-071 high condensing units: The normally closed contacts in the switches are calibrated to open at 650 ± 10 psig (448.2 ± 68.9 kPag) which corresponds to a saturated condensing temperature of 155.6 ± 1.3 F (68.7 ± 0.7 C). The pressure switches will automatically reset when the discharge pressure is reduced to 500 ± 15 psig (3448 ± 103.4 kPag) which corresponds to a saturated condensing temperature of 134.1 ± 2.4 F (56.7 ± 1.3 C).

For all 30MPW050-071 standard units: The normally closed contacts in the switches are calibrated to open at 558 ± 10 psig (3847 ± 68.9 kPag) which corresponds to a saturated condensing temperature of 140.3 ± 2.3 F (60.16 ± 16.5 C). The pressure switches will automatically reset when the discharge pressure is reduced to 435 ± 29 psig (2999 ± 199.9 kPag) which corresponds to a saturated condensing temperature of 120.35 ± 5.3 F (49.08 ± 14.83 C).

The output of the high-pressure switch is wired to inputs on the MBB to provide the control with an indication of a high pressure switch trip. This alert could occur when compressors are off if the wiring to the switch is broken or the switch has failed open.

When the trip occurs, all mechanical cooling on the circuit is shut down for 15 minutes. After 15 minutes, the circuit is allowed to restart.

A126 (Circuit A High Head Pressure) — This alarm occurs when the appropriate saturated condensing temperature is greater than the operating envelope shown in Fig 45-47. Prior to the alarm, the control will shut down one compressor on a circuit if that circuit's saturated condensing temperature is greater than the maximum SCT minus 5° F (2.7° C). If SCT continues to rise to greater than the maximum SCT, the alarm will occur and the circuit's remaining compressor will shut down. The cause of the alarm is usually an overcharged system, high outdoor ambient temperature coupled with dirty outdoor coil (30MPA only), plugged filter drier, a faulty high-pressure switch, faulty expansion valve, or loss of condenser water flow. Figures 45-47 shows the operating envelope for the compressor.

This alarm is also generated when the saturated suction temperature is below the low limit for compressors (outside of compressor envelope).

If this condition is encountered, check the following items:

- Check to be sure that the circuit is properly charged. If a leak is found, repair the leak and recharge the circuit.
- Check for proper water flow for the cooler.
- For 30MPA units, if the alarms are occurring during cold ambient conditions, consider installing head pressure control on remote condenser.
- If wind baffles are required, check to see if they are installed.
- Check the suction pressure transducer accuracy.
- Check for a low load condition. Check the control system to see if the unit should be operating.
- Check for restrictions in the liquid line. Be sure all service valves are open.
- Check the filter drier. Change the core(s) if necessary.
- Check glycol concentration and make sure brine freeze (***Set Points→FRZ→BR.FZ***) is properly set for the concentration.
- Check the operation of the liquid line solenoid valves, if equipped. Be sure that the correct valve operates for the circuit.
- Be sure that the liquid line solenoid valve is installed correctly (flow), if equipped.
- For the circuit TXV(s):
  - Check the superheat setting of the TXV. A very high setting will cause low saturated suction condition.
  - Check to be sure the proper TXV is installed.
  - Check the operation of the TXV.
  - Check the location of the TXV bulb and that it is properly installed on the suction line.
  - Check the TXV equalizer line to be sure that it is properly connected to the suction line and open to suction pressure.

A133 (Circuit A Low Suction Pressure) — This alarm indicates that after the compressor has been running for 1 minute one of the following has occured: suction pressure is below

34 psig (234 kPa), saturated suction temperature is less than 12 F (–24.4 C) for 8 seconds, the suction pressure falls below 23 psig (158 kPa), or saturated temperature is less than –18 F (–27.8 C). The Circuit A low suction pressure alert occurs and the circuit is shut down. The reset function will occur automatically for the first daily occurance and manually (MBB) for each reoccurance.

If this condition is encountered, check the following items:

- Check the unit refrigeration charge, a low charge condition can cause low suction pressures.
- Check the TXV operation.
- Check the liquid line service valve to be sure that it is fully open.
- Check the liquid line filter drier for a restriction.
- Check the head pressure control device. For 30MPA units, check the remote condenser to be sure that it is operating correctly. If the remote condenser does not have head pressure control, consider adding it. For 30MPW units, check the condenser water regulating valve for proper operation. If the unit does not have head pressure control, consider adding one, or adjusting the loop temperature.

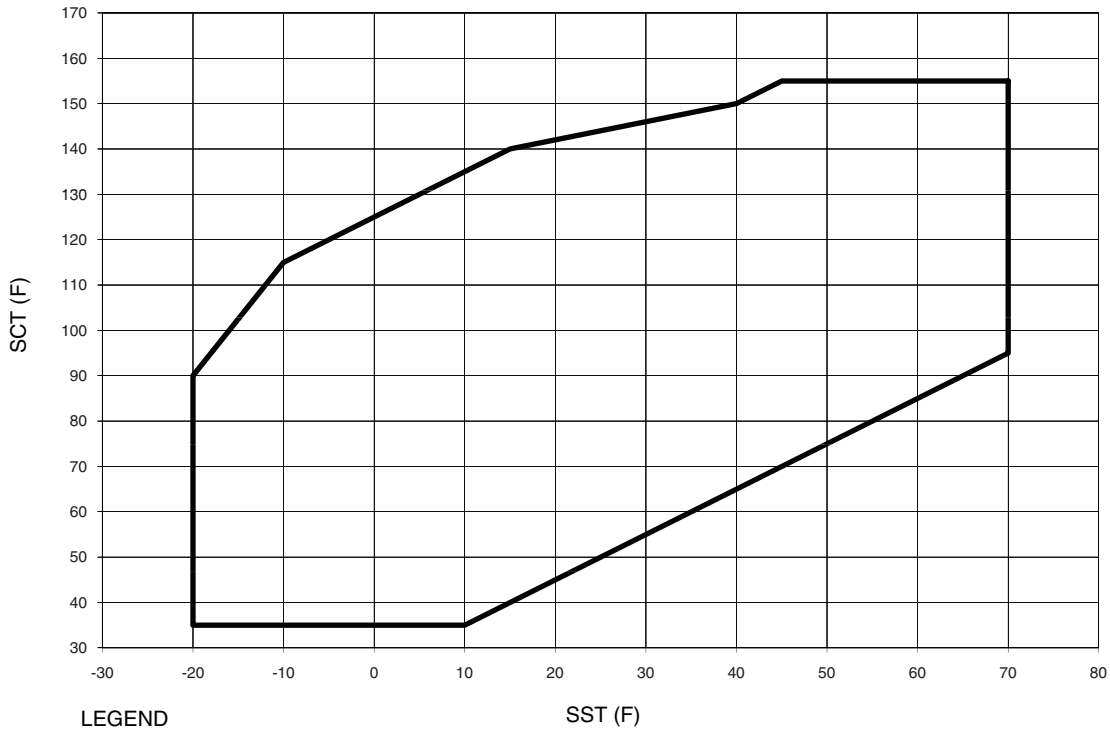

LEGEND

SCT — Saturated Condensing Temperature
SST — Saturated Suction Temperature

Fig. 45 — Operating Envelope for R-410A Compressor, 30MP015-045 Units

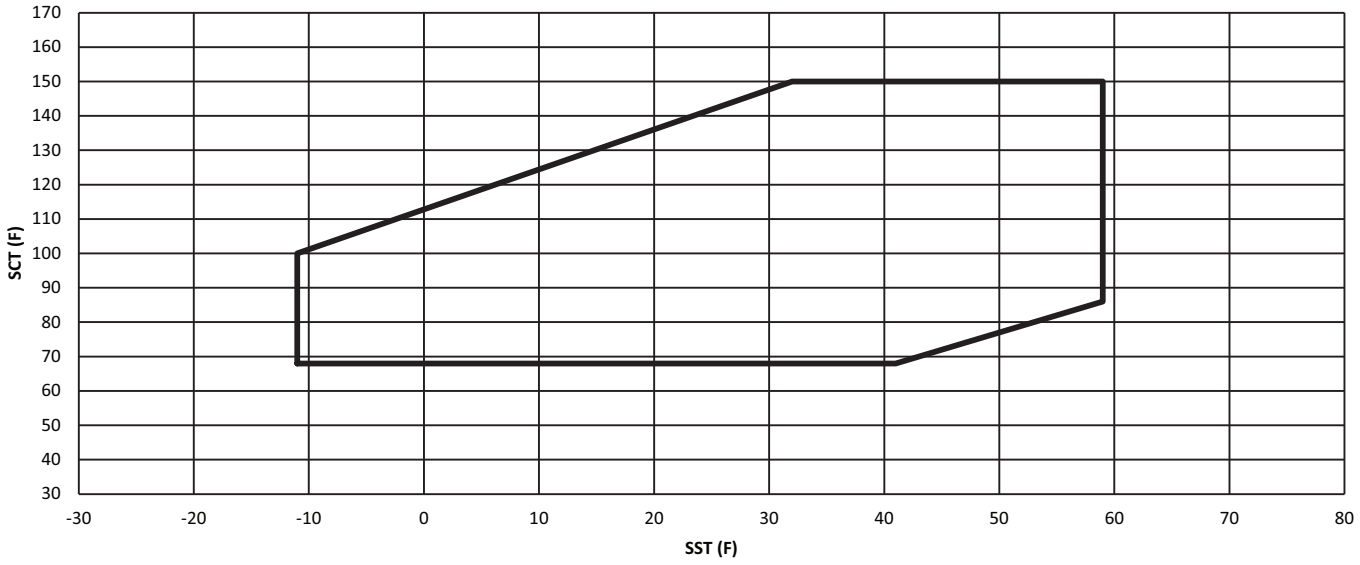

LEGEND

SCT — Saturated Condensing Temperature
SST — Saturated Suction Temperature

Fig. 46 — Operating Envelope for R410-A Compressor, 30MPA,MPW050-071 High Condensing Units

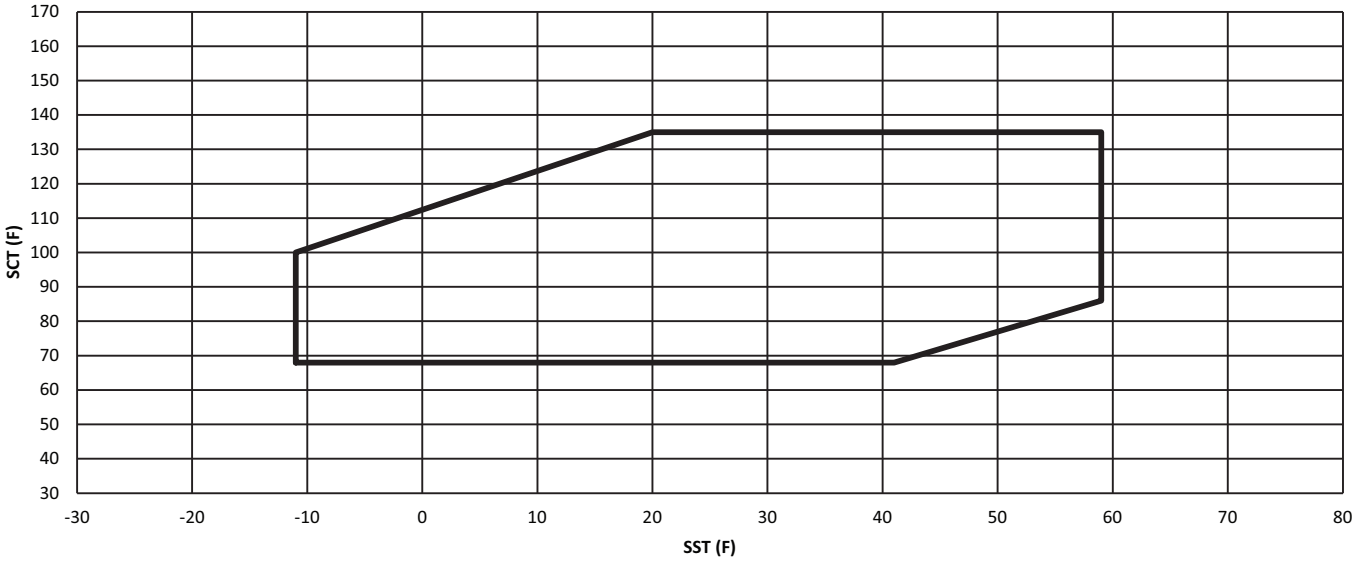

LEGEND

SCT — Saturated Condensing Temperature
SST — Saturated Suction Temperature

Fig. 47 — Operating Envelope for R410-A Compressor, 30MPW050-071 Units

A140 — Reverse Rotation Detected

Criteria for Trip: The alarm criterion is checked when the first compressor in a circuit is started. The control writes the value of the suction pressure 5 seconds before starting the first compressor in the circuit. At the time the compressor is started, another reading is obtained. A rate of change is calculated based on the two values and extrapolated to the expected value 5 seconds later. The suction pressure is obtained 5 seconds after the compressor has been started. If the suction pressure is not at least 1.25 psig (8.62 kPa) lower than the expected value or the upper limit for proof of proper rotation, a reverse rotation alarm is declared.

The example below lists sample suction pressures of a starting circuit. Figures 48 and 49 show reverse rotation detection for this example.

TIME	SUCTION PRESSURE psig (kPa)	SATURATED SUCTION TEMPERATURE °F (°C)
t=–5 (5 seconds before compressor start)	200.4 (1382)	70 (21.1)
t=0 (compressor start)	197.1 (1359)	69 (20.6)
t=5 (5 seconds after compressosr start)	169.6 (1169)	60 (15.6)

Using the rate of change of the suction from the example, five (5) seconds after t=0, the suction pressure should be 193.8 psig (1336 kPa), if the compressor did not start. Subtracting the 1.25 psig (8.62 kPa) from extrapolated suction pressure, 192.55 psig (1328 kPa) determines the upper limit that if the suction pressure is above this level the unit will fault on reverse rotation. This point is denoted by a black dot in Fig. 48 and 49. In the example, the suction pressure is lower than the upper limit, and therefore is allowed to continue operation.

Action To Be Taken: The unit shuts down immediately.

Reset Method: Manual.

Possible Causes: If this condition is encountered, check the following items:

- Check the wiring of the incoming power for proper phasing. This alarm may be disabled once the reverse rotation check has been verified by setting Reverse Rotation Enable ***Configuration→SERV→REV.R*=DSBL**.
- Check for an inoperative compressor

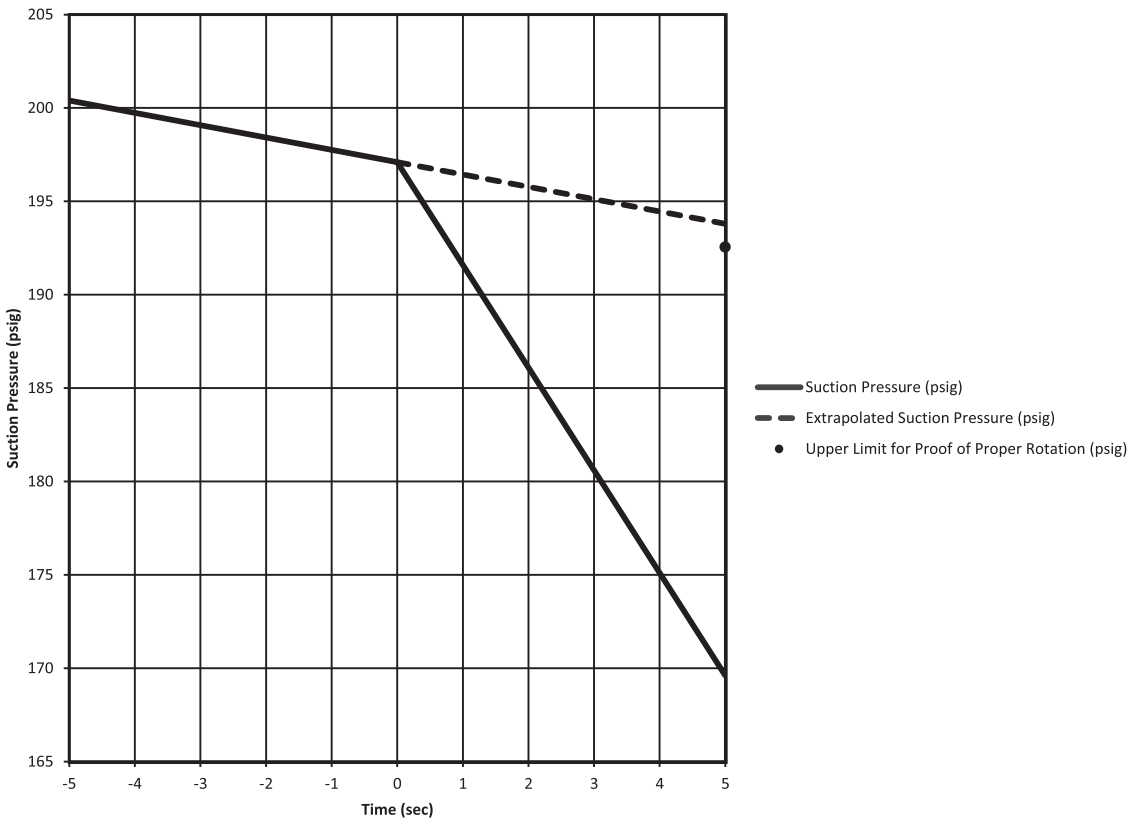

Fig. 48 — Reverse Rotation Detection (psig)

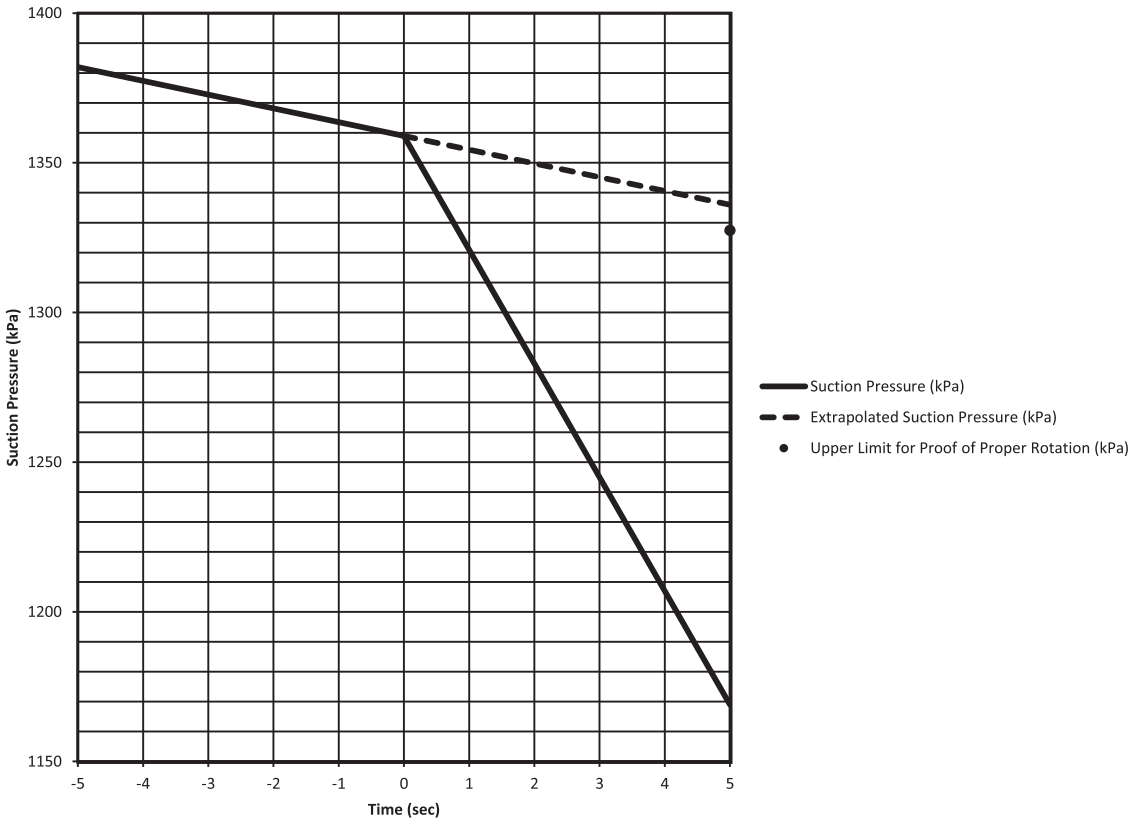

Fig. 49 — Reverse Rotation Detection (kPa)

A150 (Unit is in Emergency Stop) — If the CCN emergency stop command is received, the alarm is generated and the unit will be immediately stopped.

If the CCN point name EMSTOP in the system table is set to emergency stop, the unit will shut down immediately and broadcast an alarm back to the CCN, indicating that the unit is down. This alarm will clear when the variable is set back to "enable."

A151 — Illegal Configuration Alarm

Criteria for Trip: This alarm is indicated when an illegal configuration has been entered. There are several different configuration alarms. When expanding the alarm, the control will indicate which configuration is incorrect. For example, if the wrong size is configured, the A151 expansion will indicate "ILLEGAL CONFIG - INVALID UNIT SIZE."

Action To Be Taken: The unit is not allowed to start.

Reset Method: Automatic, once the illegal configuration is corrected.

- *Possible Causes:* If this condition is encountered, check the items shown in Table 57 based on the illegal configuration.

Table 57 — Illegal Configurations (Alarm A151)

ILLEGAL CONFIGURATION	POSSIBLE CAUSES
AUX BOARD INCORRECT REVISION	Check to see if the AUX Board is an older revision not compatible with the current software.
	Check the red LED on the AUX Board to be sure that it is blinking in unison with the other boards in the unit. If it is not, it is not communicating: - Check the LEN Communication wiring for continuity to the Main Base Board. - Check the AUX Board DIP Switch settings for the address.
	For 208 volt systems, check the control transformer to be sure that it is tapped correctly.
	Consider cycling power to the AUX Board.
AUX BOARD SOFTWARE REV MUST BE 3 OR HIGHER	Check to see if the AUX Board is an older revision not compatible with the current software. The AUX Board software revision can be found in the vendor part number, CEPL130567-03. The -03 indicates Revision 03.
AUX BOARD SHOULD BE AUX1, NOT AUX2	Check the part number of the AUX Board. It should have the Carrier Part Number 32GB500442EE (UTEC Part Number CEPL130567-03). This board is required for the digital compressor output as well as the Motormaster drive signal. An AUX2 Board, Carrier Part Number 332GB500432EE (UTEC Part Number CEPL130568-02) does not have the capability to supply these outputs.
INVALID UNIT SIZE HAS BEEN ENTERED	Check to be sure that a valid unit size ***Configuration→UNIT→SIZE*** has been entered.
UNIT CONFIGURATION SET TO INVALID TYPE	Digital compressor, ***Configuration→UNIT→A1.TY*=YES**, and hot gas ***Configuration→OPT1→MLV*=YES** are both enabled. Only one can be enabled.
FLUID IS WATER, ICE MAKING ENABLED	Ice mode is enabled, ***Configuration→OPT2→ICE.M*=ENBL**, but fluid type ***Configuration→OPT1→FLUD*= 1 (water)**.

A152 (Unit Down Due to Failure) — Reset is automatic when all alarms are cleared. This alarm indicates the unit is at 0% capacity.

T153 (Real Time Clock Hardware Failure) — A problem has been detected with MBB real time clock hardware. Try resetting the power and check the indicator lights. If the alert continues, the board should be replaced.

A154 (Serial EEPROM Hardware Failure) — A problem has been detected with the EEPROM on the MBB. Try resetting the power and check the indicator lights. If the alarm continues, the board should be replaced.

T155 (Serial EEPROM Storage Failure Error) — A problem has been detected with the EEPROM storage on the MBB. Try resetting the power and check the indicator lights. If the alert continues, the board should be replaced.

A156 (Critical Serial EEPROM Storage Failure Error) — A problem has been detected with the EEPROM storage on the MBB. Try resetting the power and check the indicator lights. If the alarm continues, the board should be replaced.

A157 (A/D Hardware Failure) — A problem has been detected with A/D conversion on the boards. Try resetting the power and check the indicator lights. If the alarm continues, the board should be replaced.

A172 (Loss of Communication with the EXV Board) — This alarm indicates that there are communication problems with the EXV board. The alarm will automatically reset.

T173 (Energy Management Module Communication Failure) — This alert indicates that there are communication problems with the energy management module. All functions performed by the EMM will stop, which can include demand limit, reset and capacity input. The alert will automatically reset.

T174 (4 to 20 mA Cooling Set point Input Failure) — This alert indicates a problem has been detected with cooling set point 4 to 20 mA input. The input value is either less than 2 mA or greater than 22 mA.

A175 (Loss of Communication with the AUX Board) — This alarm will be generated when the Main Base Board (MBB) loses communication with the AUX Board. The digital control option will be disabled while this alert is active. The chiller continues to run without Digital Compressor Control. The alert will reset automatically if communication is re-established or the unit configuration for digital control, ***A1.TY*** Compressor A1 Digital? (***Configuration Mode→UNIT***) = NO.

If this condition is encountered, check the following items:

- Check for a wiring error.
- Check for a faulty communication bus, or no connection to the AUX Board.
- Check the AUX Board.
- If the unit is configured for digital control, ***A1.TY*** Compressor A1 Digital? (***Configuration Mode→UNIT***) is YES, but the unit is not a Digital Capacity machine, (no digital compressor or AUX Board), this alarm will be generated.

T176 (4 to 20 mA Reset Input Failure) — This alert indicates a problem has been detected with reset 4 to 20 mA input. The input value is either less than 2 mA or greater than 22 mA. The reset function will be disabled when this occurs.

T177 (4 to 20 mA Demand Limit Input Failure) — This alert indicates a problem has been detected with demand limit 4 to 20 mA input. The input value is either less than 2 mA or greater than 22 mA. The reset function will be disabled when this occurs.

P200 (Coder Flow/Interlock Contacts Failed to Close at Start-Up Pre-Alarm)

T200 (Cooler Flow Interlock Contacts Failed to Close at Start-Up Alert) — If Cooler Pump Control is enabled, (***Configuration→OPT1→CPC=ON***) and the Cooler Flow Switch/Cooler Pump Interlock Contacts failed to close within 1 minute of a start command, a P200 alarm will be declared. This is a non-broadcasting alarm. The control will wait for flow to be established before starting any compressors. If after 5 minutes, the Cooler Flow Switch/Cooler Pump Interlock Contacts have not closed, the T200 alarm is declared.

If Cooler Pump Control is not enabled, (***Configuration→OPT1→CPC=OFF***) and the Cooler Flow Switch/Cooler Pump Interlock Contacts failed to close within 5 minutes of a start command, a T200 alarm will be declared.

If this condition is encountered, check the following items:

- Check the chilled water flow switch for proper operation.
- Check the flow switch cable for power and control.
- Check the chilled water loop to be sure that it is completely filled with water, and all air has been purged.
- Check the chilled water pump interlock circuit for proper operation.
- Check the pump electrical circuit for power.
- Check the pump circuit breaker.
- Check the pump contactor for proper operation.
- Check the chilled water pump for proper operation. Look for overload trips.
- Check the chilled water strainer for a restriction.
- Check to be sure that all isolation valves are open completely.

P201 (Cooler Flow/Interlock Contacts Opened During Normal Operation Pre-alarm)

A201 (Cooler Flow/Interlock Contacts Opened During Normal Operation Alarm) — This alarm will be generated if the chilled water flow switch opens for at least three (3) seconds after initially being closed, and a P201 - Cooler Flow/Interlock Contacts Opened During Normal Operation Alarm will be generated and the machine will stop. If flow is proven, the machine will be allowed to restart. If after 5 minutes, the cooler flow switch/interlock contacts do not close, the alarm will change to a A201 - Cooler Flow/Interlock Contacts Opened During Normal Operation Alarm. When this alarm is generated the chiller is shut down.

If this condition is encountered, check the following items:

- Check the chilled water flow switch for proper operation.
- Check the flow switch cable for power and control.
- Check the chilled water loop to be sure that it is completely filled with water, and all air has been purged.
- Check the chilled water pump interlock circuit for proper operation.
- Check the pump electrical circuit for power.
- Check the pump circuit breaker.
- Check the pump contactor for proper operation.
- Check the chilled water pump for proper operation. Look for overload trips.
- Check the chilled water strainer for a restriction.
- Check to be sure that all isolation valves are open completely.

A202 (Cooler Pump Interlock Closed When Pump Is Off Alarm) — This alarm will be generated if the unit is configured for ***CPC=ON*** Cooler Pump Control, (***Configuration→OPT1***) without a call for the Chilled Water Pump, ***C.LWP=OFF*** (***Outputs→GEN.O***) and the chilled water switch is closed, ***FLOW=ON*** Cooler Flow Switch (***Inputs→GEN.I***) for 5 minutes. When this alarm is generated the chiller is not allowed to start.

If this condition is encountered, check the following items:

- Check for a wiring error for the chilled water flow switch, the chilled water flow switch's connection to the MBB, or a wiring error to the chilled water pump.
- Check to see if the chilled water pump control has been manually bypassed.
- Check for a faulty or grounded chilled water flow switch.
- Check chilled water pump contactor for welded contacts.

T203 (Loss of Communication with the Slave Chiller Alert) — This alert will be generated if Dual Chiller Control is enabled, ***LLEN***=**ENBL** Lead/Lag Chiller Enable (***Configuration→RSET***), the chiller has been configured to be the Master Chiller ***MSSL***=**MAST** Master/Slave Select (***Configuration→RSET***) and it has not established or lost communication with the Slave Chiller. When this alert is generated the dual chiller control will be disabled and the unit will operate in stand-alone mode.

If this condition is encountered, check the following items:

- Check that the communication wiring between the two chillers is proper and is not grounded.
- Check to be sure that both the Master and Slave Chillers are on the same bus, ***CCNB*** CCN Bus Number (***Configuration→CCN***).
- Check to be sure that the slave chiller address ***CCNA*** CCN Address (***Configuration→CCN***) matches what is programmed in the master chiller's configuration for slave address, ***SLVA*** Slave Address (***Configuration→RSET***).
- Check for power at the slave chiller. If power is not present, this alarm will be generated.
- Check for a faulty master or slave MBB. If CCN communications is not working, this alarm will be generated.

T204 (Loss of Communication with the Master Chiller Alert) — This alert will be generated if Dual Chiller Control is enabled, ***LLEN***=**ENBL** Lead/Lag Chiller Enable (***Configuration→RSET***), the chiller has been configured to be the Slave Chiller ***MSSL***=**SLVE** Master/Slave Select (***Configuration→RSET***) and it has not established or lost communication with the Master Chiller. When this alert is generated the dual chiller control will be disabled and the unit will operate in stand-alone mode.

If this condition is encountered, check the following items:

- Check that the communication wiring between the two chillers is proper and is not grounded.
- Check to be sure that both the master and slave chillers are on the same bus, ***CCNB*** CCN Bus Number (***Configuration→CCN***).
- Check to be sure that the slave chiller address ***CCNA*** CCN Address (***Configuration→CCN***) matches what is programmed in the master chiller's configuration for slave address, ***SLVA*** Slave Address (***Configuration→RSET***).
- Check for power at the master chiller. If power is not present, this alarm will be generated.
- Check for a faulty master or slave MBB. If CCN communications is not working, this alarm will be generated.

T205 (Master and Slave Chiller with Same Address Alert) — This alert will be generated if Dual Chiller Control is enabled, ***LLEN***=**ENBL** Lead/Lag Chiller Enable (***Configuration→RSET***), the chiller has been configured to be the Master Chiller ***MSSL***=**MAST** Master/Slave Select (***Configuration→RSET***) and both the master chiller and slave chiller have the same address, ***CCNA*** CCN Address (***Configuration→CCN***). When this alert is generated the dual chiller control will be disabled and both units, master and slave, will operate in stand-alone mode.

If this condition is encountered, check to be sure that the Slave Chiller address ***CCNA*** CCN Address (***Configuration→CCN***) matches what is programmed in the Master Chiller's configuration for slave address. ***SLVA*** Slave Address (***Configuration→RSET***).

T206 (High Leaving Chilled Water Temperature Alert) — The criterion for this alert is checked when the unit is ON and the total available capacity is 100%. The alert is generated when the leaving chilled water temperature is greater than the ***LCWT***, High LCW Alert Limit (***Configuration→OPT2***) plus the control point and the leaving chilled water temperature is higher than it was 1 minute before the current reading. The LCWT is a delta temperature, not an absolute value. The alert will automatically reset when the leaving water temperature is less than the control point, or is less than the control point plus LCWT minus 5° F (2.8° C).

If this condition is encountered:

- Check building load.
- Check the ***LCWT***, High LCW Alert Limit (***Configuration→OPT2***) value.
- Check compressor operation.
- Check water flow.

A207 (Cooler Freeze Protection Alarm) — This alarm will be generated when the leaving water temperature is below ***BR.FZ***, Brine Freeze Point (***Set Point Mode→FRZ***). When this condition is encountered, the machine will enter Mode 16, and the Chilled Water Pump relay will be energized, even if the ***CPC*** Cooler Pump Control (***Configuration Mode→OPT1***) is OFF. If the machine is equipped with a pump, the pump will run for a minimum of 5 minutes. The unit will be shut down or prevented from starting.

The control will allow the machine to reset automatically if the leaving chilled water temperature rises above the ***BR.FZ*** Brine Freeze Point (***Set Point Mode→FRZ***) plus 6°F (3.3°C). If the alarm is generated again during the same day, it shall be a manual reset.

If this condition is encountered, check the following items:

- Check the entering or leaving water thermistor for accuracy.
- Check water flow rate.
- Check for freezing conditions.
- Check the heat tape and other freeze protection means for proper operation.
- Check glycol concentration and adjust ***BR.FZ*** accordingly.

A208 (EWT or LWT Thermistor Failure Alarm) — This alarm will be generated if the entering water temperature, ***EWT*** Entering Fluid Temp (***Run Status→VIEW***) is less than the leaving water temperature, ***LWT*** Leaving Fluid Temp (***Run Status→VIEW***) by 3° F (1.7° C) or more for 1 minute after the circuit has started. When this alarm is generated the chiller is shut down and prevented from starting. Chilled water pump is also shut down.

If this condition is encountered, check the following items:

- Check for a correct chilled water flow.
- Check the entering and leaving water thermistors for accuracy.
- Check to be sure the entering and leaving water thermistors are correctly wired and installed in the proper location.

A220 (Condenser Pump Interlock Failure to Close At Start-Up Alarm) — This alarm will be generated if the unit is configured for ***D.FL.S***=**ENBL** Enable Cond Flow Switch (***Configuration→OPT1***) and condenser flow interlock (if used) circuit fails to close within 5 minutes of the condenser pump start. When this alarm is generated the chiller is prevented from starting or will be shut down; condenser and chilled water pumps are shut down.

If this condition is encountered, check the following items:

- Check for a condenser pump failure.
- Check for power at the condenser pump.
- Check condenser pump control wiring
- Check condenser strainer for a restriction. Flush or replace as necessary.
- Check the condenser water flow switch operation.
- Check condenser water flow switch wiring.
- If the unit utilizes a flow regulating valve for head pressure control, consider disabling condenser flow switch feature.

P221 (Condenser Pump Interlock Opened During Normal Operation Pre-alarm)

A221 (Condenser Pump Interlock Opened During Normal Operation Alarm) — If the unit is configured for ***D.FL.S***= **ENBL** Enable Cond Flow Switch (***Configuration→OPT1***) and condenser flow interlock (if used) circuit was established and opens for 15 seconds. When this alarm is generated the chiller is prevented from starting or will be shut down; condenser and chilled water pumps are shut down.

If this condition is encountered, check the following items:

- Check for a condenser pump failure.
- Check for power at the condenser pump.
- Check condenser pump control wiring.
- Check condenser strainer for a restriction. Flush or replace as necessary.
- Check the condenser water flow switch operation.
- Check condenser water flow switch wiring.
- If the unit utilizes a flow regulating valve for head pressure control, consider disabling this feature.

A222 (Condenser Pump Interlock Closed When Pump is Off Alarm) — If the unit is configured for Condenser Pump Control, ***D.PM.E*** Enable Condenser Pump (***Configuration→OPT1***) is **1** (On when Occupied) or **2** (On with Compressor), the Condenser Flow Switch is enabled, ***D.FL.S***=**ENBL** Enable Cond Flow Switch (***Configuration→OPT1***) and condenser flow interlock (if used) circuit is closed while the pump is commanded off, this alarm will be generated. When this alarm is generated the chiller is prevented from starting.

If this condition is encountered, check the following items:

- Check for a welded condenser pump contactor.
- Check for a faulty condenser pump relay
- Check for a wiring error.

T302 (Strainer Blowdown Scheduled Maintenance Due) — This alert is generated when the ***S.T.DN*** Strainer Service Countdown (***Run Status→PM***) has expired. Be sure date is correctly set: ***MNTH*** Month of Year, ***DAY*** Day of Month, and ***YEAR*** Year of Century (***Time Clock→DATE***). Complete the strainer blowdown. Set **S.T.MN** Strainer Maintenance Done (***Run Status→PM***) to ***YES***. Then reset the alert.

If this condition is encountered, check the following item:

- Strainer maintenance is required.

T500, T501, T502 (Current Sensor Board Failure — Circuit Ax — Alert codes 500, 501, and 502 are for compressors A1, A2, and A3 respectively. These alerts occur when the output of the CSB is a constant high value. These alerts reset automatically. If the problem cannot be resolved, the CSB must be replaced.

T950 (Loss of Communication with Water System Manager) — This alert will be generated if no communications have been received by the Main Base Board for five (5) minutes. When this occurs the Water System Manager (WSM) forces are removed. The chiller runs in stand-alone mode.

If this condition is encountered, check the following items:

- Check CCN wiring.
- Check for power at the water system manager.
- Check Main Base Board for a communication failure.

A951 (Loss of Communication with Chillervisor System Manager) — This alarm will be generated if no communications have been received by the Main Base Board for five (5) minutes. When this alert is generated the Chillervisor System Manager (CSM) forces are removed, and chiller runs in stand-alone mode.

If this condition is encountered, check the following items:

- Check CCN wiring.
- Check for power at the Chillervisor System Manager.
- Check Main Base Board for a communication failure.

APPENDIX A — LOCAL DISPLAY TABLES

Run Status Mode and Sub-Mode Directory

ITEM	EXPANSION	RANGE	UNITS	CCN POINT	COMMENT
VIEW	AUTO VIEW OF RUN STATUS				
→EWT	Entering Fluid Temp		xxx.x °F	EWT	
→LWT	Leaving Fluid Temp		xxx.x °F	LWT	
→SETP	Active Setpoint		xxx.x °F	SP	
→CTPT	Control Point		xxx.x °F	CTRL_PNT	
→LOD.F	Load/Unload Factor		xxx	SMZ	
→STAT	Control Mode		x	STAT	
→OCC	Occupied		NO/YES	OCC	
→MODE	Override Modes in Effect		NO/YES	MODE	
→CAP	Percent Total Capacity		xxx	CAP_T	
→DEM.L	Active Demand Limit			DEM_LIM	
→STGE	Requested Stage		x	STAGE	
→ALRM	Current Alarms and Alerts		xxx	ALRMALRT	
→TIME	Time of Day	00:00 to 23:59	xx.xx	TIMECOPY	
→MNTH	Month of Year	1 to 12 (1 = January, 2 = February, etc.)	xx	MOY	
→DATE	Day of Month	01 to 31	xx	DOM	
→YEAR	Year of Century		xx	YOCDISP	
RUN	UNIT RUN HOUR AND START				
→HRS.U	Machine Operating Hours	0 to 999999	xxxx HRS	HR_MACH	
→STR.U	Machine Starts	0 to 1000000	xxxx	CY_MACH	
→HR.P1	Cooler Pump Run Hours	0 to 999999.9	xxxx HRS	HR_CPUMP	
→HR.P2	Condenser Pump Run Hours	0 to 999999.9	xxxx HRS	HR_DPUMP	
HOUR	CIRC AND COMP RUN HOURS				
→HR.A1	Compressor A1 Run Hours	0 to 999999	xxxx HRS	HOURS_A1	
→HR.A2	Compressor A2 Run Hours	0 to 999999	xxxx HRS	HOURS_A2	
→HR.A3	Compressor A3 Run Hours	0 to 999999	xxxx HRS	HOURS_A3	
STRT	COMPRESSOR STARTS				
→ST.A1	Compressor A1 Starts	0 to 999999	xxxx	CY_A1	
→ST.A2	Compressor A2 Starts	0 to 999999	xxxx	CY_A2	
→ST.A3	Compressor A3 Starts	0 to 999999	xxxx	CY_A3	
PM	PREVENTIVE MAINTENANCE				
→STRN	STRAINER MAINTENANCE				
→STRN→SI.ST	Strainer Srvc Interval		xxxx HRS	SI_STRNR	
→STRN→S.T.DN	Strainer Srvc Countdown	0 to 65535	xxxx HRS	ST_CDOWN	Default: 8760
→STRN→S.T.MN	Strainer Maint. Done	0 to 65535	NO/YES	ST_MAINT	
→ST.DT	STRAINER MAINT. DATES				
→ST.DT→S.T.M0			MM/DD/YY HH:MM		
→ST.DT→S.T.M1			MM/DD/YY HH:MM		
→ST.DT→S.T.M2			MM/DD/YY HH:MM		
→ST.DT→S.T.M3			MM/DD/YY HH:MM		
→ST.DT→S.T.M4			MM/DD/YY HH:MM		
VERS	SOFTWARE VERSION NUMBERS				
→MBB	CESR131482-xx-xx				
→EXV*	CESR131172-xx-xx				
→AUX1*	CESR131333-xx-xx				
→EMM*	CESR131174-xx-xx				
→MARQ	CESR131171-xx-xx				
→NAVI*	CESR130227-xx-xx				

* If these devices are not installed, they will not show in the table.

Service Test Mode and Sub-Mode Directory

ITEM	EXPANSION	RANGE	UNITS	CCN POINT	COMMENT
TEST	SERVICE TEST MODE		OFF/ON	MAN_CTRL	To enable Service Test mode, move Enable/Off/ Remote control switch to OFF. Change TEST to ON. Move switch to ENABLE.
OUTS	OUTPUTS AND PUMPS				
→CLR.P	Cooler Pump Relay		OFF/ON	S_CLPMP	
→CND.P	Condenser Pump		OFF/ON	S_CNDPMP	
→UL.TM	Comp A1 Unload Time	0 to 15	xx	S_A1ULTM	
→CC.H	Crankcase Heater		OFF/ON	S_CCH	
→CW.VO	Condenser Valve Open		OFF/ON	S_CWVO	not supported
→CW.VC	Condenser Valve Close		OFF/ON	S_CWVC	not supported
→EXV.A	EXV% Open		xxx%	S_EXV_A	
→LL.SV	Liquid Line Solenoid		OFF/ON	S_LLSV	
→RMT.A	Remote Alarm Relay		OFF/ON	S_ALM	
CMPA	CIRCUIT 1 COMPRESSOR TST				
→CC.A1	Compressor A1 Relay		OFF/ON	S_A1_RLY	
→UL.TM	Comp A1 Unload Time	0 to 15	xx	S_A1ULTM	
→CC.A2	Compressor A2 Relay		OFF/ON	S_A2_RLY	
→CC.A3	Compressor A3 Relay		OFF/ON	S_A3_RLY	
→MLV	Minimum Load Valve Relay		OFF/ON	S_MLV	

Temperature Mode and Sub-Mode Directory

ITEM	EXPANSION	UNITS	CCN POINT	COMMENT
UNIT	ENT AND LEAVE UNIT TEMPS			
→CEWT	Cooler Entering Fluid	xxx.x °F	COOL_EWT	
→CLWT	Cooler Leaving Fluid	xxx.x °F	COOL_LWT	
→CDET	Condenser Entering Fluid	xxx.x °F	COND_EWT	
→CDLT	Condenser Leaving Fluid	xxx.x °F	COND_LWT	
→OAT	Outside Air Temperature	xxx.x °F	OAT	
→SPT	Space Temperature	xxx.x °F	SPT	
→DLWT	Lead/Lag Leaving Fluid	xxx.x °F	DUAL_LWT	
CIR.A	TEMPERATURES CIRCUIT A			
→SCT.A	Saturated Condensing Tmp	xxx.x °F	TMP_SCTA	
→SST.A	Saturated Suction Temp	xxx.x °F	TMP_SSTA	
→RGT.A	Compr Return Gas Temp	xxx.x °F	TMP_RGTA	
→D.GAS	Discharge Gas Temp	xxx.x °F	DISGAS	
→SH.A	Suction Superheat Temp	xxx.x ΔF	SH_A	

Pressures Mode and Sub-Mode Directory

ITEM	EXPANSION	UNITS	CCN POINT	COMMENT
PRC.A	PRESSURES CIRCUIT A			
→DP.A	Discharge Pressure	xxx.x PSIG	DP_A	
→SP.A	Suction Pressure	xxx.x PSIG	SP_A	

Set Points Mode and Sub-Mode Directory

ITEM	EXPANSION	RANGE	UNITS	CCN POINT	DEFAULT
COOL	COOLING SETPOINTS				
→CSP.1	Cooling Setpoint 1	–20 to 70°F	xxx.x °F	CSP1	44°F
→CSP.2	Cooling Setpoint 2	–20 to 70°F	xxx.x °F	CSP2	44°F
→CSP.3	ICE Setpoint	–20 to 32°F	xxx.x °F	CSP3	32°F
HEAD	HEAD PRESSURE SETPOINTS				
→H.DP	Head Setpoint	85 to 120°F	xxx.x °F	HSP	95°F
FRZ	BRINE FREEZE SETPOINT				
→BR.FZ	Brine Freeze Point	–20 to 34°F	xxx.x °F	BRN_FRZ	34°F

Inputs Mode and Sub-Mode Directory

ITEM	EXPANSION	UNITS	CCN POINT	COMMENT
GEN.I	GENERAL INPUTS			
→STST	Start/Stop Switch	STRT/STOP	START	
→FLOW	Cooler Flow Switch	OFF/ON	COOLFLOW	
→CD.FL	Condenser Flow Switch	OFF/ON	CONDFLOW	
→DLS1	Demand Limit Switch 1	OFF/ON	DMD_SW1	
→DLS2	Demand Limit Switch 2	OFF/ON	DMD_SW2	
→ICED	Ice Done	OFF/ON	ICE_DONE	
→DUAL	Dual Setpoint Switch	OFF/ON	DUAL_IN	
CRCT	CIRCUIT INPUTS			
→FKA1	Compressor A1 Feedback	OFF/ON	K_A1_FBK	
→FKA2	Compressor A2 Feedback	OFF/ON	K_A2_FBK	
→FKA3	Compressor A3 Feedback	OFF/ON	K_A3_FBK	
→HPS.A	High Pressure Switch A	OFF/ON	HPSA	
4-20	4-20 MA INPUTS			
→DMND	4-20 ma Demand Signal	xx.x	LMT_MA	
→A.DL	Active Demand Limit		DEM_LIM	
→RSET	4-20 ma Reset Signal	xx.x	RST_MA	
→D.RST	Degrees of Reset		DEG_RST	
→CSP	4-20 ma Cooling Setpoint	xx.x	CSP_IN	

Outputs Mode and Sub-Mode Directory

ITEM	EXPANSION	UNITS	CCN POINT	COMMENT
GEN.O	GENERAL OUTPUTS			
→C.LWP	Cooler Pump Relay	OFF/ON	COOLPUMP	
→C.DWP	Condenser Pump	OFF/ON	CONDPUMP	
→ALRM	Alarm State	OFF/ON	ALM	
→CD.W.O*	Condenser Valve Open	OFF/ON	COND_WVO	
→CD.W.C*	Condenser Valve Close	OFF/ON	COND_WVC	

* Not supported.

Outputs Mode and Sub-Mode Directory (cont)

ITEM	EXPANSION	UNITS	CCN POINT	COMMENT
CIR.A	OUTPUTS CIRCUIT A			
→CC.A1	Compressor A1 Relay	OFF/ON	K_A1_RLY	
→D.PER	Compressor A1 Load Percent	OFF/ON	DIGITALP	
→CC.A2	Compressor A2 Relay	OFF/ON	K_A2_RLY	
→CC.A3	Compressor A3 Relay	OFF/ON	K_A3_RLY	
→CCH	Crankcase Heater Relay	OFF/ON	CCH_RLY	
→LLSV	Liquid Line Solenoid	OFF/ON	LLSV_A	
→MLV.R	Minimum Load Valve Relay	OFF/ON	MLV_RLY	
A.EXV				
→EXV.A	EXV% Open	OFF/ON	EXV_A	
→APPR	Circuit A Approach	OFF/ON	CIRA_APP	
→AP.SP	Approach Setpoint	OFF/ON	APPRA_SP	
→X.SH.R	SH Reset at Max Unl-Dig		MAXSHRST	
→S.SH.R	Digload to Start SH RST		SHRSTBGN	
→SH_R	Amount of SH Reset		SH_RESET	
→OVR.A	EXVA Override	OFF/ON	EXVAOVRR	
→SPH.A	Suction Superheat Temp	OFF/ON	SH_A	
→ASH.S	Active Superheat Setpt	OFF/ON	ACTSH_SP	
→AMP.S	Active Mop Setpt	OFF/ON	ACMOP_SP	
→PLM.A	Cir A EXV Position Limit	OFF/ON	PLMA	

Configuration Mode and Sub-Mode Directory

ITEM	EXPANSION	RANGE	UNITS	CCN POINT	DEFAULT
DISP	DISPLAY CONFIGURATION				
→TEST	Test Display LEDs		OFF/ON	DISPTEST	
→METR	Metric Display		OFF = English ON = Metric	DISPUNIT	OFF = English
→LANG	Language Selection	0 = English 1 = Espanol 2 = Francais 3 = Portuguese	X	LANGUAGE	0
→PAS.E	Password Enable	DSBL/ENBL		PASS_EBL	ENBL
→PASS	Service Password	0 to 9999	XXXX	PASSCOPY	1111
UNIT	UNIT CONFIGURATION				
→TYPE	Unit Type	2=Air Cooled, 3=Water Cooled	X	UNIT_TYP	
→SIZE	Unit Size	15 to 74	XXX	SIZE	
→SZA.1	Compressor A1 Size	Unit Size Dependent	XX	SIZE_A1	
→SZA.2	Compressor A2 Size	Unit Size Dependent	XX	SIZE_A2	
→SZA.3	Compressor A3 Size	Unit Size Dependent	XX	SIZE_A3	
→A1.TY	Compressor A1 Digital?		NO/YES	CPA1TYPE	
→MAX.T	Maximum A1 Unload Time	0 to 15	XX	MAXULTME	7 (040,045) 10 (020,030)
→D.TYP	Discharge Gas Therm Type	0 = 86K 1 = 100K	X	DGASTYPE	0
OPT1	UNIT OPTIONS 1 HARDWARE				
→FLUD	Cooler Fluid	1 = Water 2 = Medium Temp Brine	X	FLUIDTYP	1 = Water
→MLV.S	Minimum Load Vlv Select		NO/YES	MLV_FLG	NO
→RG.EN	Return Gas Sensor Enable		DSBL/ENBL	RGT_ENA	
→OAT.E	Enable OAT Sensor		DSBL/ENBL	OAT_ENA	
→CSB.E	CSB Boards Enable		DSBL/ENBL	CSB_ENA	
→CPC	Cooler Pump Control		OFF/ON	CPC	ON
→PM.DY	Cooler Pump Shutdown Dly	0 to 10	XX MIN	PUMP_DLY	1 MIN
→D.PM.E	Enable Condenser Pump	0=No Control 1=On When Occupied 2=On with Compressors	X	CONDPMPE	0=No Control
→D.FL.S	Enable Cond Flow Switch		DSBL/ENBL	CONDFLSW	DSBL
→CDWS	Enable Cond Wtr Sensors		DSBL/ENBL	CONDWTRS	DSBL
OPT2	UNIT OPTIONS 2 CONTROLS				
→CTRL	Control Method	0=Switch 1=Occupancy 2=Occupancy 3=CCN	X	CONTROL	0=Switch
→LCWT	High LCW Alert Limit	2 to 60°F	XX	LCW_LMT	60°F
→DELY	Minutes Off Time	0 to 15	XX	DELAY	0
→ICE.M	Ice Mode Enable		DSBL/ENBL (Requires EMM)	ICE_CNFG	DSBL

Configuration Mode and Sub-Mode Directory (cont)

ITEM	EXPANSION	RANGE	UNITS	CCN POINT	DEFAULT
EXV.A	CIR A EXV CONFIGURATION				
→***EXV.L***	EXV Opening at Low LWT	0 to 50%	XX%		25%
→***LWT.L***	LWT for EXV Min Opening	20 to 40 F	XX° F		10 F
→***EXV.H***	EXV Opening at High LWT	0 to 70%	XX%		50%
→***LWT.H***	LWT for EXV Max Opening	20 to 70 F	XX° F		35 F
→***MIN.A***	EXV CIRC.A Min Position	0 to 100	XXX		2
→***RNG.A***	EXVA Steps in Range	0 to 65535	XXXXX		3690
→***SPD.A***	EXVA Steps Per Second	0 to 65535	XXXXX		150
→***POF.A***	EXVA Fail Position In%	0 to 100	XXX		0
→***MIN.A***	EXVA Minimum Steps	0 to 65535	XXXXX		0
→***MAX.A***	EXVA Maximum Steps	0 to 65535	XXXXX		3690
→***OVR.A***	EXVA Overrun Steps	0 to 65535	XXX		167
→***TYP.A***	EXVA Stepper Type	0 = UNIPOLAR 1 = BIPOLAR	0,1		1
→***H.SCT***	High SCT Threshold	50 to 140	XXX		115
→***X.PCT***	Open EXV X% on 2nd COMP	0 to 30	XX		10
→***X.PER***	Move EXV X% on DISCRSOL	0 to 30	XX		5
→***DELY***	Lag Start Delay	0 to 100	XXX		10
→***L.DL.T***	Low SH Delta T - EXV Move	0 to 240	XXX		6
→***SHR.T***	EXV Rate Threshold	–1.0 to 1.0 ΔF	XX.X ΔF		0.2ΔF
→***LEXM***	Low SH Override EXV Move	0.4 to 3.0	X.X%		1.0%
CCN	CCN NETWORK CONFIGS				
→***CCNA***	CCN Address	1 to 239	XXX	CCNADD	1
→***CCNB***	CCN Bus Number	0 to 239	XXX	CCNBUS	0
→***BAUD***	CCN Baud Rate	1 = 2400 2 = 4800 3 = 9600 4 =19,200 5 =38,400	X	CCNBAUDD	3 = 9600
RSET	RESET COOL TEMP				
→***CRST***	Cooling Reset Type	0 = No Reset 1 = 4 to 20 mA Input 2 = Outdoor Air Temp 3 = Return Fluid 4 = Space Temp	X	CRST_TYP	0 = No Reset
→***MA.DG***	4-20 - Degrees Reset	–30 to 30ΔF	XX.XΔF	MA_DEG	10.0ΔF
→***RM.NO***	Remote - No Reset Temp	0 to 125°F	XXX.X °F	REM_NO	10.0°F
→***RM.F***	Remote - Full Reset Temp	0 to 125°F	XXX.X °F	REM_FULL	0.0°F
→***RM.DG***	Remote - Degrees Reset	–30 to 30ΔF	XX.X ΔF	REM_DEG	0.0ΔF
→***RT.NO***	Return - No Reset Temp	0 to 30ΔF	XXX.XΔF	RTN_NO	10ΔF
→***RT.F***	Return - Full Reset Temp	0 to 10ΔF	XXX.XΔF	RTN_FULL	0.0ΔF
→***RT.DG***	Return - Degrees Reset	–30 to 30ΔF	XX.XΔF	RTN_DEG	0.0ΔF
→***DMDC***	Demand Limit Select	0 = None 1 = Switch (Requires EMM) 2 = 4 to 20 mA Input (Requires EMM) 3 = CCN Loadshed	X	DMD_CTRL	0 = None
→***DM20***	Demand Limit at 20 mA	0 to 100	XXX%	DMT20MA	100
→***SHNM***	Loadshed Group Number	0 to 99	XXX	SHED_NUM	0
→***SHDL***	Loadshed Demand Delta	0 to 60	XXX%	SHED_DEL	0
→***SHTM***	Maximum Loadshed Time	0 to 120	XXX	SHED_TIM	60
→***DLS1***	Demand Limit Switch 1	0 to 100	XXX%	DLSWSP1	80
→***DLS2***	Demand Limit Switch 2	0 to 100	XXX%	DLSWSP2	50
→***LLEN***	Lead/Lag Chiller Enable		DSBL/ENBL	LL_ENA	DSBL
→***MSSL***	Master/Slave Select		SLVE/MAST	MS_SEL	MAST
→***SLVA***	Slave Address	0 to 239	XXX	SLV_ADDR	0
→***LLBL***	Lead/Lag Balance Select	0 = Master Leads 1 = Slave Leads 2 = Automatic	X	LL_BAL	0 = Master Leads
→***LLBD***	Lead/Lag Balance Delta	40 to 400 hours	XXX	LL_BAL_D	168
→***LLDY***	Lag Start Delay	0 to 30 minutes	XXX	LL_DELAY	5 minutes
→***PARA***	Parallel Configuration		NO/YES	PARALLEL	YES

Configuration Mode and Sub-Mode Directory (cont)

ITEM	EXPANSION	RANGE	UNITS	CCN POINT	DEFAULT
SLCT	SETPOINT AND RAMP LOAD				
→CLSP	Cooling Set Point Select	0 = Single 1 = Dual Switch 2 = Dual CCN Occupied 3 = 4 to 20 mA Input	X	CLSP_TYP	0 = Single
→RL.S	Ramp Load Select		DSBL/ENBL	RAMP_EBL	ENBL
→CRMP	Cooling Ramp Loading	0.2 to 2	X.X	CRAMP	1.0
→SCHD	Schedule Number	0 to 99	XX	SCHEDNUM	0
→Z.GN	Deadband Multiplier	1 to 4	X.X	Z_GAIN	1.0
SERV	SERVICE CONFIGURATION				
→EN.A1	Enable Compressor A1		DSBL/ENBL	ENABLEA1	
→EN.A2	Enable Compressor A2		DSBL/ENBL	ENABLEA2	
→EN.A3	Enable Compressor A3		DSBL/ENBL	ENABLEA3	
→REV.R	Reverse Rotation Enable		DSBL/ENBL	REVR_ENA	ENBL
BCST	BROADCAST CONFIGURATION				
→T.D.BC	CCN Time/Date Broadcast		OFF/ON	CCNBC	OFF
→OAT.B	CCN OAT Broadcast		OFF/ON	OATBC	OFF
→G.S.BC	Global Schedule Broadcst		OFF/ON	GSBC	OFF
→BC.AK	CCN Broadcast Ack'er		OFF/ON	CCNBCACK	OFF

Time Clock Mode and Sub-Mode Directory

ITEM	EXPANSION	RANGE	UNITS	CCN POINT	DEFAULT
TIME	TIME OF DAY				
→HH.MM	Hour and Minute	0 to 65535	XXXXX	TIME	
DATE	MONTH, DATE, DAY, AND YEAR				
→MNTH	Month of Year	1 to 12 (1 = January, 2 = February, etc.)	XX	MOY	
→DOM	Day of Month	1 to 31	XX	DOM	
→DAY	Day of Week	1 to 7 (1 = Monday, 2 = Tuesday, etc.)	X	DOWDISP	
→YEAR	Year of Century	1999 to 2098	XXXX	YOCDISP	
DST	DAYLIGHT SAVINGS TIME				
→STR.M	Month	1 to 12	XX	STARTM	4
→STR.W	Week	1 to 5	X	STARTW	1
→STR.D	Day	1 to 7	X	STARTD	7
→MIN.A	Minutes to Add	0 to 90	XX	MINADD	60
→STP.M	Month	1 to 12	XX	STOPM	10
→STP.W	Week	1 to 5	XX	STOPW	5
→STP.D	Day	1 to 7	XX	STOPD	7
→MIN.S	Minutes to Subtract	0 to 90	XX	MINSUB	60
HOL.L	LOCAL HOLIDAY SCHEDULES				
→HD.01	HOLIDAY SCHEDULE 01				
→HD.01→MON	Holiday Start Month	0 to 12	XX	HOLMON01	
→HD.01→DAY	Start Day	0 to 31	XX	HOLDAY01	
→HD.01→LEN	Duration (days)	0 to 99	XX	HOLLEN01	
→HD.02	HOLIDAY SCHEDULE 02				
→HD.02→MON	Holiday Start Month	0 to 12	XX	HOLMON02	
→HD.02→DAY	Start Day	0 to 31	XX	HOLDAY02	
→HD.02→LEN	Duration (days)	0 to 99	XX	HOLLEN02	
→HD.03	HOLIDAY SCHEDULE 03				
→HD.03→MON	Holiday Start Month	0 to 12	XX	HOLMON03	
→HD.03→DAY	Start Day	0 to 31	XX	HOLDAY03	
→HD.03→LEN	Duration (days)	0 to 99	XX	HOLLEN03	
→HD.04	HOLIDAY SCHEDULE 04				
→HD.04→MON	Holiday Start Month	0 to 12	XX	HOLMON04	
→HD.04→DAY	Start Day	0 to 31	XX	HOLDAY04	
→HD.04→LEN	Duration (days)	0 to 99	XX	HOLLEN04	
→HD.05	HOLIDAY SCHEDULE 05				
→HD.05→MON	Holiday Start Month	0 to 12	XX	HOLMON05	
→HD.05→DAY	Start Day	0 to 31	XX	HOLDAY05	
→HD.05→LEN	Duration (days)	0 to 99	XX	HOLLEN05	
→HD.06	HOLIDAY SCHEDULE 06				
→HD.06→MON	Holiday Start Month	0 to 12	XX	HOLMON06	
→HD.06→DAY	Start Day	0 to 31	XX	HOLDAY06	
→HD.06→LEN	Duration (days)	0 to 99	XX	HOLLEN06	
→HD.07	HOLIDAY SCHEDULE 07				
→HD.07→MON	Holiday Start Month	0 to 12	XX	HOLMON07	
→HD.07→DAY	Start Day	0 to 31	XX	HOLDAY07	
→HD.07→LEN	Duration (days)	0 to 99	XX	HOLLEN07	
→HD.08	HOLIDAY SCHEDULE 08				
→HD.08→MON	Holiday Start Month	0 to 12	XX	HOLMON08	
→HD.08→DAY	Start Day	0 to 31	XX	HOLDAY08	
→HD.08→LEN	Duration (days)	0 to 99	XX	HOLLEN08	
→HD.09	HOLIDAY SCHEDULE 09				
→HD.09→MON	Holiday Start Month	0 to 12	XX	HOLMON09	
→HD.09→DAY	Start Day	0 to 31	XX	HOLDAY09	
→HD.09→LEN	Duration (days)	0 to 99	XX	HOLLEN09	
→HD.10	HOLIDAY SCHEDULE 10				
→HD.10→MON	Holiday Start Month	0 to 12	XX	HOLMON10	
→HD.10→DAY	Start Day	0 to 31	XX	HOLDAY10	
→HD.10→LEN	Duration (days)	0 to 99	XX	HOLLEN10	

ITEM	EXPANSION	RANGE	UNITS	CCN POINT	DEFAULT
HOL.L	LOCAL HOLIDAY SCHEDULES				
→HD.11	HOLIDAY SCHEDULE 11				
→HD.11→MON	Holiday Start Month	0 to 12	XX	HOLMON11	
→HD.11→DAY	Start Day	0 to 31	XX	HOLDAY11	
→HD.11→LEN	Duration (days)	0 to 99	XX	HOLLEN11	
→HD.12	HOLIDAY SCHEDULE 12				
→HD.12→MON	Holiday Start Month	0 to 12	XX	HOLMON12	
→HD.12→DAY	Start Day	0 to 31	XX	HOLDAY12	
→HD.12→LEN	Duration (days)	0 to 99	XX	HOLLEN12	
→HD.13	HOLIDAY SCHEDULE 13				
→HD.13→MON	Holiday Start Month	0 to 12	XX	HOLMON13	
→HD.13→DAY	Start Day	0 to 31	XX	HOLDAY13	
→HD.13→LEN	Duration (days)	0 to 99	XX	HOLLEN13	
→HD.14	HOLIDAY SCHEDULE 14				
→HD.14→MON	Holiday Start Month	0 to 12	XX	HOLMON14	
→HD.14→DAY	Start Day	0 to 31	XX	HOLDAY14	
→HD.14→LEN	Duration (days)	0 to 99	XX	HOLLEN14	
→HD.15	HOLIDAY SCHEDULE 15				
→HD.15→MON	Holiday Start Month	0 to 12	XX	HOLMON15	
→HD.15→DAY	Start Day	0 to 31	XX	HOLDAY15	
→HD.15→LEN	Duration (days)	0 to 99	XX	HOLLEN15	
→HD.16	HOLIDAY SCHEDULE 16				
→HD.16→MON	Holiday Start Month	0 to 12	XX	HOLMON16	
→HD.16→DAY	Start Day	0 to 31	XX	HOLDAY16	
→HD.16→LEN	Duration (days)	0 to 99	XX	HOLLEN16	
→HD.17	HOLIDAY SCHEDULE 17				
→HD.17→MON	Holiday Start Month	0 to 12	XX	HOLMON17	
→HD.17→DAY	Start Day	0 to 31	XX	HOLDAY17	
→HD.17→LEN	Duration (days)	0 to 99	XX	HOLLEN17	
→HD.18	HOLIDAY SCHEDULE 18				
→HD.18→MON	Holiday Start Month	0 to 12	XX	HOLMON18	
→HD.18→DAY	Start Day	0 to 31	XX	HOLDAY18	
→HD.18→LEN	Duration (days)	0 to 99	XX	HOLLEN18	
→HD.19	HOLIDAY SCHEDULE 19				
→HD.19→MON	Holiday Start Month	0 to 12	XX	HOLMON19	
→HD.19→DAY	Start Day	0 to 31	XX	HOLDAY19	
→HD.19→LEN	Duration (days)	0 to 99	XX	HOLLEN19	
→HD.20	HOLIDAY SCHEDULE 20				
→HD.20→MON	Holiday Start Month	0 to 12	XX	HOLMON20	
→HD.20→DAY	Start Day	0 to 31	XX	HOLDAY20	
→HD.20→LEN	Duration (days)	0 to 99	XX	HOLLEN20	
→HD.21	HOLIDAY SCHEDULE 21				
→HD.21→MON	Holiday Start Month	0 to 12	XX	HOLMON21	
→HD.21→DAY	Start Day	0 to 31	XX	HOLDAY21	
→HD.21→LEN	Duration (days)	0 to 99	XX	HOLLEN21	
→HD.22	HOLIDAY SCHEDULE 22				
→HD.22→MON	Holiday Start Month	0 to 12	XX	HOLMON22	
→HD.22→DAY	Start Day	0 to 31	XX	HOLDAY22	
→HD.22→LEN	Duration (days)	0 to 99	XX	HOLLEN22	
→HD.23	HOLIDAY SCHEDULE 23				
→HD.23→MON	Holiday Start Month	0 to 12	XX	HOLMON23	
→HD.23→DAY	Start Day	0 to 31	XX	HOLDAY23	
→HD.23→LEN	Duration (days)	0 to 99	XX	HOLLEN23	
→HD.24	HOLIDAY SCHEDULE 24				
→HD.24→MON	Holiday Start Month	0 to 12	XX	HOLMON24	
→HD.24→DAY	Start Day	0 to 31	XX	HOLDAY24	
→HD.24→LEN	Duration (days)	0 to 99	XX	HOLLEN24	
→HD.25	HOLIDAY SCHEDULE 25				
→HD.25→MON	Holiday Start Month	0 to 12	XX	HOLMON25	
→HD.25→DAY	Start Day	0 to 31	XX	HOLDAY25	
→HD.25→LEN	Duration (days)	0 to 99	XX	HOLLEN25	
→HD.26	HOLIDAY SCHEDULE 26				
→HD.26→MON	Holiday Start Month	0 to 12	XX	HOLMON26	
→HD.26→DAY	Start Day	0 to 31	XX	HOLDAY26	
→HD.26→LEN	Duration (days)	0 to 99	XX	HOLLEN26	
→HD.27	HOLIDAY SCHEDULE 27				
→HD.27→MON	Holiday Start Month	0 to 12	XX	HOLMON27	
→HD.27→DAY	Start Day	0 to 31	XX	HOLDAY27	
→HD.27→LEN	Duration (days)	0 to 99	XX	HOLLEN27	
→HD.28	HOLIDAY SCHEDULE 28				
→HD.28→MON	Holiday Start Month	0 to 12	XX	HOLMON28	
→HD.28→DAY	Start Day	0 to 31	XX	HOLDAY28	
→HD.28→LEN	Duration (days)	0 to 99	XX	HOLLEN28	
→HD.29	HOLIDAY SCHEDULE 29				
→HD.29→MON	Holiday Start Month	0 to 12	XX	HOLMON29	
→HD.29→DAY	Start Day	0 to 31	XX	HOLDAY29	
→HD.29→LEN	Duration (days)	0 to 99	XX	HOLLEN29	
→HD.30	HOLIDAY SCHEDULE 30				
→HD.30→MON	Holiday Start Month	0 to 12	XX	HOLMON30	
→HD.30→DAY	Start Day	0 to 31	XX	HOLDAY30	
→HD.30→LEN	Duration (days)	0 to 99	XX	HOLLEN30	
SCH.N	SCHEDULE NUMBER	0 to 99	XX	SCHEDNUM	0

Time Clock Mode and Sub-Mode Directory (cont)

ITEM	EXPANSION	RANGE	UNITS	CCN POINT	DEFAULT
SCH.L	LOCAL OCCUPANCY SCHEDULE				
→PER.1	OCCUPANCY PERIOD 1				
→PER.1→OCC.1	Period Occupied Time	0 to 6144	XX:XX	PER1OCC	
→PER.1→UNC.1	Period Unoccupied Time	0 to 6144	XX:XX	PER1UNC	
→PER.1→MON.1	Monday In Period		NO/YES	PER1MON	
→PER.1→TUE.1	Tuesday In Period		NO/YES	PER1TUE	
→PER.1→WED.1	Wednesday In Period		NO/YES	PER1WED	
→PER.1→THU.1	Thursday In Period		NO/YES	PER1THU	
→PER.1→FRI.1	Friday In Period		NO/YES	PER1FRI	
→PER.1→SAT.1	Saturday In Period		NO/YES	PER1SAT	
→PER.1→SUN.1	Sunday In Period		NO/YES	PER1SUN	
→PER.1→HOL.1	Holiday In Period		NO/YES	PER1HOL	
→PER.2	OCCUPANCY PERIOD 2				
→PER.2→OCC.2	Period Occupied Time	0 to 6144	XX:XX	PER2OCC	
→PER.2→UNC.2	Period Unoccupied Time	0 to 6144	XX:XX	PER2UNC	
→PER.2→MON.2	Monday In Period		NO/YES	PER2MON	
→PER.2→TUE.2	Tuesday In Period		NO/YES	PER2TUE	
→PER.2→WED.2	Wednesday In Period		NO/YES	PER2WED	
→PER.2→THU.2	Thursday In Period		NO/YES	PER2THU	
→PER.2→FRI.2	Friday In Period		NO/YES	PER2FRI	
→PER.2→SAT.2	Saturday In Period		NO/YES	PER2SAT	
→PER.2→SUN.2	Sunday In Period		NO/YES	PER2SUN	
→PER.2→HOL.2	Holiday In Period		NO/YES	PER2HOL	
→PER.3	OCCUPANCY PERIOD 3				
→PER.3→OCC.3	Period Occupied Time	0 to 6144	XX:XX	PER3OCC	
→PER.3→UNC.3	Period Unoccupied Time	0 to 6144	XX:XX	PER3UNC	
→PER.3→MON.3	Monday In Period		NO/YES	PER3MON	
→PER.3→TUE.3	Tuesday In Period		NO/YES	PER3TUE	
→PER.3→WED.3	Wednesday In Period		NO/YES	PER3WED	
→PER.3→THU.3	Thursday In Period		NO/YES	PER3THU	
→PER.3→FRI.3	Friday In Period		NO/YES	PER3FRI	
→PER.3→SAT.3	Saturday In Period		NO/YES	PER3SAT	
→PER.3→SUN.3	Sunday In Period		NO/YES	PER3SUN	
→PER.3→HOL.3	Holiday In Period		NO/YES	PER3HOL	
→PER.4	OCCUPANCY PERIOD 4				
→PER.4→OCC.4	Period Occupied Time	0 to 6144	XX:XX	PER4OCC	
→PER.4→UNC.4	Period Unoccupied Time	0 to 6144	XX:XX	PER4UNC	
→PER.4→MON.4	Monday In Period		NO/YES	PER4MON	
→PER.4→TUE.4	Tuesday In Period		NO/YES	PER4TUE	
→PER.4→WED.4	Wednesday In Period		NO/YES	PER4WED	
→PER.4→THU.4	Thursday In Period		NO/YES	PER4THU	
→PER.4→FRI.4	Friday In Period		NO/YES	PER4FRI	
→PER.4→SAT.4	Saturday In Period		NO/YES	PER4SAT	
→PER.4→SUN.4	Sunday In Period		NO/YES	PER4SUN	
→PER.4→HOL.4	Holiday In Period		NO/YES	PER4HOL	
→PER.5	OCCUPANCY PERIOD 5				
→PER.5→OCC.5	Period Occupied Time	0 to 6144	XX:XX	PER5OCC	
→PER.5→UNC.5	Period Unoccupied Time	0 to 6144	XX:XX	PER5UNC	
→PER.5→MON.5	Monday In Period		NO/YES	PER5MON	
→PER.5→TUE.5	Tuesday In Period		NO/YES	PER5TUE	
→PER.5→WED.5	Wednesday In Period		NO/YES	PER5WED	
→PER.5→THU.5	Thursday In Period		NO/YES	PER5THU	
→PER.5→FRI.5	Friday In Period		NO/YES	PER5FRI	
→PER.5→SAT.5	Saturday In Period		NO/YES	PER5SAT	
→PER.5→SUN.5	Sunday In Period		NO/YES	PER5SUN	
→PER.5→HOL.5	Holiday In Period		NO/YES	PER5HOL	
→PER.6	OCCUPANCY PERIOD 6				
→PER.6→OCC.6	Period Occupied Time	0 to 6144	XX:XX	PER6OCC	
→PER.6→UNC.6	Period Unoccupied Time	0 to 6144	XX:XX	PER6UNC	
→PER.6→MON.6	Monday In Period		NO/YES	PER6MON	
→PER.6→TUE.6	Tuesday In Period		NO/YES	PER6TUE	
→PER.6→WED.6	Wednesday In Period		NO/YES	PER6WED	
→PER.6→THU.6	Thursday In Period		NO/YES	PER6THU	
→PER.6→FRI.6	Friday In Period		NO/YES	PER6FRI	
→PER.6→SAT.6	Saturday In Period		NO/YES	PER6SAT	
→PER.6→SUN.6	Sunday In Period		NO/YES	PER6SUN	
→PER.6→HOL.6	Holiday In Period		NO/YES	PER6HOL	
→PER.7	OCCUPANCY PERIOD 7				
→PER.7→OCC.7	Period Occupied Time	0 to 6144	XX:XX	PER7OCC	
→PER.7→UNC.7	Period Unoccupied Time	0 to 6144	XX:XX	PER7UNC	
→PER.7→MON.7	Monday In Period		NO/YES	PER7MON	
→PER.7→TUE.7	Tuesday In Period		NO/YES	PER7TUE	
→PER.7→WED.7	Wednesday In Period		NO/YES	PER7WED	
→PER.7→THU.7	Thursday In Period		NO/YES	PER7THU	
→PER.7→FRI.7	Friday In Period		NO/YES	PER7FRI	
→PER.7→SAT.7	Saturday In Period		NO/YES	PER7SAT	
→PER.7→SUN.7	Sunday In Period		NO/YES	PER7SUN	
→PER.7→HOL.7	Holiday In Period		NO/YES	PER7HOL	

Time Clock Mode and Sub-Mode Directory (cont)

ITEM	EXPANSION	RANGE	UNITS	CCN POINT	DEFAULT
SCH.L (cont)	LOCAL OCCUPANCY SCHEDULE				
→PER.8	OCCUPANCY PERIOD 8				
→PER.8→OCC.8	Period Occupied Time	0 to 6144	XX:XX	PER8OCC	
→PER.8→UNC.8	Period Unoccupied Time	0 to 6144	XX:XX	PER8UNC	
→PER.8→MON.8	Monday In Period		NO/YES	PER8MON	
→PER.8→TUE.8	Tuesday In Period		NO/YES	PER8TUE	
→PER.8→WED.8	Wednesday In Period		NO/YES	PER8WED	
→PER.8→THU.8	Thursday In Period		NO/YES	PER8THU	
→PER.8→FRI.8	Friday In Period		NO/YES	PER8FRI	
→PER.8→SAT.8	Saturday In Period		NO/YES	PER8SAT	
→PER.8→SUN.8	Sunday In Period		NO/YES	PER8SUN	
→PER.8→HOL.8	Holiday In Period		NO/YES	PER8HOL	
OVR	SCHEDULE OVERRIDE				
→OVR.T	Timed Override Hours	0 to 4 hours	X	OVR_EXT	0
→OVR.L	Override Time Limit	0 to 4 hours	X	OTL	0
→T.OVR	Timed Override		NO/YES	TIMEOVER	NO

Operating Mode and Sub-Mode Directory

ITEM	EXPANSION	RANGE	UNITS	CCN POINT	DEFAULT
MODE	MODES CONTROLLING UNIT				
→MD01	CSM controlling Chiller		OFF/ON	MODE_1	
→MD02	WSM controlling Chiller		OFF/ON	MODE_2	
→MD03	Master/Slave control		OFF/ON	MODE_3	
→MD05	Ramp Load Limited		OFF/ON	MODE_5	
→MD06	Timed Override in effect		OFF/ON	MODE_6	
→MD07	Low Cooler Suction TempA		OFF/ON	MODE_7	
→MD09	Slow Change Override		OFF/ON	MODE_9	
→MD10	Minimum OFF time active		OFF/ON	MODE_10	
→MD13	Dual Setpoint		OFF/ON	MODE_13	
→MD14	Temperature Reset		OFF/ON	MODE_14	
→MD15	Demand/Sound Limited		OFF/ON	MODE_15	
→MD16	Cooler Freeze Protection		OFF/ON	MODE_16	
→MD17	Low Temperature Cooling		OFF/ON	MODE_17	
→MD18	High Temperature Cooling		OFF/ON	MODE_18	
→MD19	Making ICE		OFF/ON	MODE_19	
→MD20	Storing ICE		OFF/ON	MODE_20	
→MD21	High SCT Circuit A		OFF/ON	MODE_21	
→MD23	Minimum Comp. On Time		OFF/ON	MODE_23	
→MD24	Pump Off Delay Time		OFF/ON	MODE_24	
→MDAO	Circuit A Trio Oil Mgmt		OFF/ON	MD_A_OIL	

Alarms Mode and Sub-Mode Directory

ITEM	EXPANSION	RANGE	UNITS	CCN POINT	COMMENT
CRNT	CURRENTLY ACTIVE ALARMS				
→AA01					
→AA02					
→AA03					
→AA04					
→AA05					
→AA06					
→AA07					
→AA08					
→AA09					
→AA10					
→AA11					Alarms are shown as AXXX
→AA12		AXXX			Alerts are shown as TXXX
→AA13	Current Alarms 1-25	TXXX			PreAlerts are shown as PXXX
→AA14		PXXX			
→AA15					
→AA16					
→AA17					
→AA18					
→AA19					
→AA20					
→AA21					
→AA22					
→AA23					
→AA24					
→AA25					
RCRN	Reset All Current Alarms	NO/YES		ALRESET	
HIST	ALARM HISTORY				
→AL01					
→AL02					
→AL03					
→AL04					
→AL05					
→AL06					
→AL07					
→AL08					Alarms are shown as AXXX
→AL09					Alerts are shown as TXXX
→AL10		AXXX			PreAlerts are shown as PXXX
→AL11	Alarm History 1-20	TXXX			
→AL12		PXXX			
→AL13					
→AL14					
→AL15					
→AL16					
→AL17					
→AL18					
→AL19					
→AL20					

APPENDIX B — CCN TABLES

CCN DISPLAY TABLES

TABLE	DISPLAY NAME	RANGE	UNITS	POINT NAME	WRITE STATUS
A-UNIT	GENERAL UNIT PARAMETERS				
	Control Mode	10-char ASCII		STAT	
	Occupied	No/Yes		OCC	
	CCN Chiller	Stop/Start		CHIL_S_S	forcible
	Alarm State	6-char ASCII		ALM	
	Active Demand Limit	NNN	%	DEM_LIM	forcible
	Override Modes in Effect	No/Yes		MODE	
	Percent Total Capacity	NNN	%	CAP_T	
	Requested Stage	NN		STAGE	
	Active Setpoint	NNN.n	degF	SP	
	Control Point	NNN.n	degF	CTRL_PNT	forcible
	Degrees of Reset	NN.n	deltaF	DEG_RST	
	Entering Fluid Temp	NNN.n	degF	EWT	
	Leaving Fluid Temp	NNN.n	degF	LWT	
	Emergency Stop	Enable/EMStop		EMSTOP	forcible
	Minutes Left for Start	5-char ASCII		MIN_LEFT	
	PUMPS				
	Cooler Pump Relay	Off/On		COOLPUMP	
	Condenser Pump	Off/On		CONDPUMP	
	Cooler Flow Switch	Off/On		COOLFLOW	
	Condenser Flow Switch	Off/On		CONDFLOW	
CIRCA_AN	CIRCUIT A ANALOG PARAMETERS				
	Percent Total Capacity	NNN	%	CAPA_T	
	Percent Available Cap.	NNN	%	CAPA_A	
	Discharge Pressure	NNN.n	PSIG	DP_A	
	Suction Pressure	NNN.n	PSIG	SP_A	
	Head Setpoint	NNN.n	degF	HSP	
	Saturated Condensing Tmp	NNN.n	degF	TMP_SCTA	
	Saturated Suction Temp	NNN.n	degF	TMP_SSTA	
	Compr Return Gas Temp	NNN.n	degF	TMP_RGTA	
	Discharge Gas Temp	NNN.n	degF	DISGAS	
	Suction Superheat Temp	NNN.n	deltaF	SH_A	
CIRCADIO	CIRCUIT A DISCRETE INPUTS/ OUTPUTS				
	CIRC. A DISCRETE OUTPUTS				
	Compressor A1 Relay	Off/On		K_A1_RLY	
	Compressor A1 Unload Time	NN	secs	ALUNLTME	
	Compressor A2 Relay	Off/On		K_A2_RLY	
	Compressor A3 Relay	Off/On		K_A3_RLY	
	Minimum Load Valve Relay	Off/On		MLV_RLY	
	CIRC. A DISCRETE INPUTS				
	Compressor A1 Feedback	Off/On		K_A1_FBK	
	Compressor A2 Feedback	Off/On		K_A2_FBK	
	Compressor A3 Feedback	Off/On		K_A3_FBK	
OPTIONS	UNIT PARAMETERS				
	UNIT ANALOG VALUES				
	Cooler Entering Fluid	NNN.n	degF	COOL_EWT	
	Cooler Leaving Fluid	NNN.n	degF	COOL_LWT	
	Condenser Entering Fluid	NNN.n	degF	COND_EWT	
	Condenser Leaving Fluid	NNN.n	degF	COND_LWT	
	Lead/Lag Leaving Fluid	NNN.n	degF	DUAL_LWT	
	TEMPERATURE RESET				
	4-20 ma Reset Signal	NN.n	milliAmps	RST_MA	
	Outside Air Temperature	NNN.n	degF	OAT	forcible
	Space Temperature	NNN.n	degF	SPT	forcible
	DEMAND LIMIT				
	4-20 ma Demand Signal	NN.n	milliAmps	LMT_MA	
	Demand Limit Switch 1	Off/On		DMD_SW1	
	Demand Limit Switch 2	Off/On		DMD_SW2	
	CCN Loadshed Signal	N		DL_STAT	
	MISCELLANEOUS				
	Dual Setpoint Switch	Off/On		DUAL_IN	
	Cooler LWT Setpoint	NNN.n	degF	LWT_SP	
	Ice Done	Off/On		ICE_DONE	

CCN MAINTENANCE TABLES

TABLE	DISPLAY NAME	RANGE	UNITS	POINT NAME	WRITE STATUS
EXVA_TAB					
	EXVA Position in Steps	NNNNNN	steps	EXVAPOSS	
	EXVA Position in Percent	NNNN.nn	%	EXVAPOSP	
	EXVA Commanded Steps	NNNNNN	steps	EXVACMDS	
	EXVA Run Status	NNN		EXVASTAT	
	EXVA Write Command	Off/On		EXVARITE	
	EXVA Command Byte	NNN		EXVACMDB	
	EXVA Absolute Percentage	NNNN.nn	%	EXVAABSP	
	EXVA Delta Percentage	NNNNN.n	%	EXVADELP	
	Saturated Suction Temp	NNN.n	degF	TMP_SSTA	
	Compr Return Gas Temp	NNN.n	degF	TMP_RGTA	
	Discharge Gas Temp	NNN.n	degF	DISGAS	
	EXV % Open	NNN	%	EXV_A	
	Amount of SH Reset	NNN.n	deltaF	SH_RESET	
	EXVA Override	NNNNN		EXVAOVRR	
	EXVA Steps in Range	NNNNN	steps	EXVARANG	
	EXVA Steps Per Second	NNNNN		EXVARATE	
	EXVA Fail Position in %	NNNN.nn	%	EXVAPOSF	
	EXVA Minimum Steps	NNNNN	steps	EXVAMINS	
	EXVA Maximum Steps	NNNNN	steps	EXVAMAXS	
	EXVA Overrun Steps	NNNNN	steps	EXVAOVRS	
	EXVA Stepper Type	NNN		EXVATYPE	
STRTHOUR					
	Machine Operating Hours	NNNNNN	hours	HR_MACH	
	Machine Starts	NNNNNN	hours	CY_MACH	
	Compressor A1 Run Hours	NNNNNN.n	hours	HR_A1	
	Compressor A2 Run Hours	NNNNNN.n	hours	HR_A2	
	Compressor A3 Run Hours	NNNNNN.n		HR_A3	
	Compressor A1 Starts	NNNNNN		CY_A1	
	Compressor A2 Starts	NNNNNN		CY_A2	
	Compressor A3 Starts	NNNNNN		CY_A3	
	PUMP HOURS				
	Cooler Pump Run Hours	NNNNNN.n	hours	HR_CPUMP	
	Condenser Pump Run Hours	NNNNNN.n	hours	HR_DPUMP	
CURRMODS					
	CSM controlling Chiller	Off/On		MODE_1	
	WSM controlling Chiller	Off/On		MODE_2	
	Master/Slave control	Off/On		MODE_3	
	Ramp Load Limited	Off/On		MODE_5	
	Timed Override in effect	Off/On		MODE_6	
	Low Cooler Suction TempA	Off/On		MODE_7	
	Slow Change Override	Off/On		MODE_9	
	Minimum OFF time active	Off/On		MODE_10	
	Dual Setpoint	Off/On		MODE_13	
	Temperature Reset	Off/On		MODE_14	
	Demand/Sound Limited	Off/On		MODE_15	
	Cooler Freeze Protection	Off/On		MODE_16	
	Low Temperature Cooling	Off/On		MODE_17	
	High Temperature Cooling	Off/On		MODE_18	
	Making ICE	Off/On		MODE_19	
	Storing ICE	Off/On		MODE_20	
	High SCT Circuit A	Off/On		MODE_21	
	Minimum Comp. On Time	Off/On		MODE_23	
	Pump Off Delay Time	Off/On		MODE_24	
	Circuit A Trio Oil Mgmt	Off/On		MD_A_OIL	

CCN MAINTENANCE TABLES (cont)

TABLE	DISPLAY NAME	RANGE	UNITS	POINT NAME	WRITE STATUS
ALARMS					
	Active Alarm #1	4-char ASCII		ALARM01C	
	Active Alarm #2	4-char ASCII		ALARM02C	
	Active Alarm #3	4-char ASCII		ALARM03C	
	Active Alarm #4	4-char ASCII		ALARM04C	
	Active Alarm #5	4-char ASCII		ALARM05C	
	Active Alarm #6	4-char ASCII		ALARM06C	
	Active Alarm #7	4-char ASCII		ALARM07C	
	Active Alarm #8	4-char ASCII		ALARM08C	
	Active Alarm #9	4-char ASCII		ALARM09C	
	Active Alarm #10	4-char ASCII		ALARM10C	
	Active Alarm #11	4-char ASCII		ALARM11C	
	Active Alarm #12	4-char ASCII		ALARM12C	
	Active Alarm #13	4-char ASCII		ALARM13C	
	Active Alarm #14	4-char ASCII		ALARM14C	
	Active Alarm #15	4-char ASCII		ALARM15C	
	Active Alarm #16	4-char ASCII		ALARM16C	
	Active Alarm #17	4-char ASCII		ALARM17C	
	Active Alarm #18	4-char ASCII		ALARM18C	
	Active Alarm #19	4-char ASCII		ALARM19C	
	Active Alarm #20	4-char ASCII		ALARM20C	
	Active Alarm #21	4-char ASCII		ALARM21C	
	Active Alarm #22	4-char ASCII		ALARM22C	
	Active Alarm #23	4-char ASCII		ALARM23C	
	Active Alarm #24	4-char ASCII		ALARM24C	
	Active Alarm #25	4-char ASCII		ALARM25C	
VERSIONS					
	CESR131172-	5-char ASCII		EXV	
	CESR131333-	5-char ASCII		AUX	
	CESR131482-	5-char ASCII		MBB	
	CESR131174-	5-char ASCII		EMM	
	CESR131171-	5-char ASCII		MARQUEE	
	CESR131227-	5-char ASCII		NAVIGATOR	
LOADFACT	CAPACITY CONTROL				
	Load/Unload Factor	NNN		SMZ	
	Control Point	NNN.n	degF	CTRL_PNT	
	Entering Fluid Temp	NNN.n	degF	EWT	
	Leaving Fluid Temp	NNN.n	degF	LWT	
	Ramp Load Limited	Off/On		MODE_5	
	Slow Change Override	Off/On		MODE_9	
	Cooler Freeze Protection	Off/On		MODE_16	
	Low Temperature Cooling	Off/On		MODE_17	
	High Temperature Cooling	Off/On		MODE_18	
	Minimum Comp. On Time	Off/On		MODE_23	
LEARNFNS					
	SCT Delta for Comp A1	NNN.n	deltaF	A1SCTDT	
	SCT Delta for Comp A2	NNN.n	deltaF	A2SCTDT	
	SCT Delta for Comp A3	NNN.n	deltaF	A3SCTDT	
PM-STRN					
	Strainer Srvc Interval	NNNNN	hours	SI_STRNR	
	Strainer Srvc Countdown	NNNNN	hours	ST_CDOWN	
	Strainer Maint. Done	No/Yes		ST_MAINT	
	Strainer Maint. Date	15-char ASCII		STRN_PM0	
	Strainer Maint. Date	15-char ASCII		STRN_PM1	
	Strainer Maint. Date	15-char ASCII		STRN_PM2	
	Strainer Maint. Date	15-char ASCII		STRN_PM3	
	Strainer Maint. Date	15-char ASCII		STRN_PM4	
TESTMODE					
	Service Test Mode	Off/On		NET_CTRL	
	Compressor A1 Relay	Off/On		S_A1_RLY	
	Compressor A2 Relay	Off/On		S_A2_RLY	
	Compressor A3 Relay	Off/On		S_A3_RLY	
	Cooler Pump Relay	Off/On		S_CLPMP	
	Condenser Pump	Off/On		S_CNDPMP	
	Comp A1 Unload Time	NN	secs	S_A1ULTM	
	Remote Alarm Relay	Off/On		S_ALM	

CCN MAINTENANCE TABLES (cont)

TABLE	DISPLAY NAME	RANGE	UNITS	POINT NAME	WRITE STATUS
RUNTEST					
	Percent Total Capacity	NNN	%	CAPA_T	
	Percent Available Cap.	NNN	%	CAPA_A	
	Discharge Pressure	NNN.n	PSIG	DP_A	
	Suction Pressure	NNN.n	PSIG	SP_A	
	Saturated Condensing Tmp	NNN.n	degF	TMP_SCTA	
	Saturated Suction Temp	NNN.n	degF	TMP_SSTA	
	Compr Return Gas Temp	NNN.n	degF	TMP_RGTA	
	Discharge Gas Temp	NNN.n	degF	DISGAS	
	Suction Superheat Temp	NNN.n	deltaF	SH_A	
	Compressor A1 Relay	Off/On		K_A1_RLY	
	Compressor A2 Relay	Off/On		K_A2_RLY	
	Compressor A3 Relay	Off/On		K_A3_RLY	
	Minimum Load Valve Relay	Off/On		MLV_RLY	
	Compressor A1 Feedback	Off/On		K_A1_FBK	
	Compressor A2 Feedback	Off/On		K_A2_FBK	
	Compressor A3 Feedback	Off/On		K_A3_FBK	
	Outside Air Temperature	NNN.n	degF	OAT	
	Space Temperature	NNN.n	degF	SPT	
	Cooler Pump Relay	Off/On		COOLPUMP	
	Condenser Pump	Off/On		CONDPUMP	
	Cooler Entering Fluid	NNN.n	degF	COOL_EWT	
	Cooler Leaving Fluid	NNN.n	degF	COOL_LWT	
	Condenser Entering Fluid	NNN.n	degF	COND_EWT	
	Condenser Leaving Fluid	NNN.n	degF	COND_LWT	
	Cooler Flow Switch	Off/On		COOLFLOW	
DUALCHIL					
	Dual Chiller Link Good?	No/Yes		DC_LINK	
	Master Chiller Role	12-char ASCII		MC_ROLE	
	Slave Chiller Role	12-char ASCII		SC_ROLE	
	Lead Chiller Ctrl Point	NNN.n	degF	LEAD_CP	
	Lag Chiller Ctrl Point	NNN.n	degF	LAG_CP	
	Control Point	NNN.n	degF	CTRL_PNT	
	Cool EnteringFluid-Slave	NNN.n	degF	COOLEWTS	
	Cool Leaving Fluid-Slave	NNN.n	degF	COOLLWTS	
	Cooler Entering Fluid	NNN.n	degF	COOL_EWT	
	Cooler Leaving Fluid	NNN.n	degF	COOL_LWT	
	Lead/Lag Leaving Fluid	NNN.n	degF	DUAL_LWT	
	Percent Avail.Capacity	NNN	%	CAP_A	
	Percent Avail.Cap.Slave	NNN	%	CAP_A_S	
	Lag Start Delay Time	5-char ASCII		LAGDELAY	
	Load/Unload Factor	NNN		SMZ	
	Load/Unload Factor-Slave	NNNN		SMZSLAVE	
	Lead SMZ Clear Commanded	No/Yes		LEADSMZC	
	Lag SMZ Clear Commanded	No/Yes		LAG_SMZC	
	Lag Commanded Off?	No/Yes		LAG_OFF	
	Dual Chill Lead CapLimit	NNN.n	%	DCLDCAPL	
	Dual Chill Lag CapLimit	NNN.n	%	DCLGCAPL	

CCN CONFIGURATION TABLES

TABLE	DISPLAY NAME	RANGE	UNITS	POINT NAME	DEFAULT
UNIT	UNIT CONFIGURATION				
	Unit Type	N		UNIT_TYP	Unit Dependent
	Unit Size	NNN	tons	SIZE	Unit Size
	Compressor A1 Size	NNN	tons	SIZE_A1	Unit Size Dependent
	Compressor A2 Size	NNN	tons	SIZE_A2	Unit Size Dependent
	Compressor A3 Size	NNN	tons	SIZE_A3	Unit Size Dependent
	Suction Superheat Setpt	NN.n	deltaF	SH_SP	9.0 deg F
	Compressor A1 Digital?	No/Yes		CPA1TYPE	Unit Dependent
	Maximum A1 Unload Time	NN	secs	MAXULTME	10 - 020 to 030 7 - 035 to 045
OPTIONS1	OPTIONS 1 CONFIGURATION				
	Cooler Fluid	N	1=Water 2=Medium Temperature Brine	FLUIDTYP	1=Water
	Minimum Load Vlv Select	No/Yes		MLV_FLG	No
	Return Gas Sensor Enable	Disable/Enable		RGT_ENA	Disable
	Enable OAT Sensor	Disable/Enable		OAT_ENA	Disable
	CSB Boards Enable	Disable/Enable		CSB_ENA	Enable
	Reverse Rotation Enable	Disable/Enable		REVR_ENA	Enable
	Cooler Pump Control	Off/On		CPC	Off
	Cooler Pump Shutdown Dly	NN	mins	PUMP_DLY	1
	EMM Module Installed	No/Yes		EMM_BRD	No
	Enable Condenser Pump	N	0=No Control 1=On When Occupied 2=On with Compressors	CONDPMPE	0=No Conrol
	Enable Cond Wtr Sensors	Disable/Enable		CONDWTRS	Disable
	Enable Cond Flow Switch	Disable/Enable		CONDFLSW	Disable

CCN CONFIGURATION TABLES (cont)

TABLE	DISPLAY NAME	RANGE	UNITS	POINT NAME	DEFAULT
OPTIONS2	OPTIONS 2 CONFIGURATION				
	Control Method	N		CONTROL	0
	Loading Sequence Select	N		SEQ_TYPE	1
	Lead/Lag Circuit Select	N		LEAD_TYP	1
	Cooling Setpoint Select	N		CLSP_TYP	0
	Ramp Load Select	Disable/Enable		RAMP_EBL	Enable
	High LCW Alert Limit	NN.n	deltaF	LCW_LMT	60.0
	Minutes Off time	NN	mins	DELAY	0
	Deadband Multiplier	N.n		Z_GAIN	1.0
	Ice Mode Enable	Disable/Enable		ICE_CNFG	Disable
SCHEDOVR	TIME OVERRIDE SETUP				
	Schedule Number	NN		SCHEDNUM	1
	Override Time Limit	N	hours	OTL	0
	Timed Override Hours	N	hours	OVR_EXT	0
	Timed Override	No/Yes		TIMEOVER	No
RESETCON	TEMPERATURE RESET AND DEMAND LIMIT				
	COOLING RESET				
	Cooling Reset Type	N		CRST_TYP	0
	4-20 MA RESET				
	4-20 - Degrees Reset	NNN.n	deltaF	MA_DEG	10.0
	REMOTE RESET				
	Remote - No Reset Temp	NNN.n	degF	REM_NO	10.0
	Remote - Full Reset Temp	NNN.n	degF	REM_FULL	0.0
	Remote - Degrees Reset	NNN.n	deltaF	REM_DEG	0.0
	RETURN TEMPERATURE RESET				
	Return - No Reset Temp	NNN.n	deltaF	RTN_NO	10.0
	Return - Full Reset Temp	NNN.n	deltaF	RTN_FULL	0.0
	Return - Degrees Reset	NNN.n	deltaF	RTN_DEG	0.0
	DEMAND LIMIT				
	Demand Limit Select	N		DMD_CTRL	0
	Demand Limit at 20 mA	NNN.n	%	DMT20MA	100.0
	Loadshed Group Number	NN		SHED_NUM	0
	Loadshed Demand Delta	NN	%	SHED_DEL	0
	Maximum Loadshed Time	NNN	mins	SHED_TIM	60
	Demand Limit Switch 1	NNN	%	DLSWSP1	80
	Demand Limit Switch 2	NNN	%	DLSWSP2	50
DUALCHILL	DUAL CHILLER CONFIGURATION SETTINGS				
	LEAD/LAG				
	Lead/Lag Chiller Enable	Disable/Enable		LL_ENA	Disable
	Master/Slave Select	Master/Slave		MS_SEL	Master
	Slave Address	NNN		SLV_ADDR	2
	Lead/Lag Balance Select	N		LL_BAL	0
	Lead/Lag Balance Delta	NNN	hours	LL_BAL_D	168
	Lag Start Delay	NN	mins	LL_DELAY	5
	Parallel Configuration	No/Yes		PARALLEL	Yes
DISPLAY	MARQUEE DISPLAY SETUP				
	Service Password	NNNN		PASSWORD	1111
	Password Enable	Disable/Enable		PASS_EBL	Enable
	Metric Display	Off/On		DISPUNIT	Off
	Language Selection	N		LANGUAGE	0
EXVACONF	EXV CIRCUIT A CONFIGURATION				
	EXV Opening at Low LWT	NNN.N	%	EXV_Y1	25
	LWT for EXV Min Opening	NNN.N		LWT_X1	10
	EXV Opening at High LWT	NNN.N	%	EXV_Y2	50
	LWT for EXV Max Opening	NNN.N	°F	LWT_X2	35
	EXV Circ. A Min Position	NNN.N	%	EXVAMINP	2
	EXVA Steps in Range	NNNNN	steps	EXVARANG	2500
	EXVA Steps Per Second	NNNNN		EXVARATE	150
	EXVA Fail Position In %	NNNN.NN	%	EXVAPOSF	0
	EXVA Minimum Steps	NNNNN	steps	EXVAMINS	0
	EXVA Maximum Steps	NNNNN	steps	EXVAMAXS	2500
	EXVA Overrun Steps	NNNNN	steps	EXVAOVRS	167
	EXVA Stepper Type	NNN		EXVATYPE	1
	High SCT Threshold	NNN.N	°F	HIGH_SCT	115
	Open EXV X% on 2nd comp	NNN.N	%	EXV_HSCT	10
	Move EXV X% on DISCRSOL	NNN.N	%	EXVDISCR	5
	Lag Start Delay	NNN	sec	DELAYLAG	10
	SH Reset Maximum	NNN.N	^F	MAXSHRST	11
	Cap at SH Offset Maximum	NNN.N	%	SHRSTBGN	25
	SH Rate Threshold	NNN.N	^F	SHR_THR	0.2
	Low SH DeltaT EXV Move	NNN	sec	LSH_DL_T	60
	Low SH Override EXV Move	NNN.N	%	LSH_EXVM	1

CCN SERVICE TABLES

TABLE	DISPLAY NAME	RANGE	UNITS	POINT NAME	DEFAULT
SERVICE	SERVICE				
	Brine Freeze Point	NNN.n	degF	BRN_FRZ	34.0
	COMPRESSOR ENABLE				
	Enable Compressor A1	Disable/Enable		ENABLEA1	Unit Dependent
	Enable Compressor A2	Disable/Enable		ENABLEA2	Unit Dependent
	Enable Compressor A3	Disable/Enable		ENABLEA3	Unit Dependent

CCN SETPOINT TABLES

TABLE	DISPLAY NAME	RANGE	UNITS	POINT NAME	DEFAULT
SETPOINT	SETPOINT				
	COOLING				
	Cooling Setpoint 1	NNN.n	degF	CSP1	44.0
	Cooling Setpoint 2	NNN.n	degF	CSP2	44.0
	ICE Setpoint	NNN.n	degF	CSP3	32.0
	RAMP LOADING				
	Cooling Ramp Loading	N.n		CRAMP	1.0
	Brine Freeze Point	NNN.n	degF	BRN_FRZ	34.0

APPENDIX C — BACNET COMMUNICATION OPTION

The following section is used to configure the UPC Open controller which is used when the BACnet* communication option is selected. The UPC Open controller is mounted in the main control box per unit components arrangement diagrams.

TO ADDRESS THE UPC OPEN CONTROLLER — The user must give the UPC Open controller an address that is unique on the BACnet network. Perform the following procedure to assign an address:

1. If the UPC Open controller is powered, pull the screw terminal connector from the controller's power terminals labeled Gnd and HOT. The controller reads the address each time power is applied to it.
2. Using the rotary switches (see Fig. A and B), set the controller's address. Set the Tens (10's) switch to the tens digit of the address, and set the Ones (1's) switch to the ones digit.

As an example in Fig. B, if the controller's address is 25, point the arrow on the Tens (10's) switch to 2 and the arrow on the Ones (1's) switch to 5.

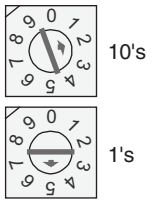

Fig. B — Address Rotary Switches

BACNET DEVICE INSTANCE ADDRESS — The UPC Open controller also has a BACnet Device Instance address. This Device Instance MUST be unique for the complete BACnet system in which the UPC Open controller is installed. The Device Instance is auto generated by default and is derived by adding the MAC address to the end of the Network Number. The Network Number of a new UPC Open controller is 16101, but it can be changed using i-Vu® Tools or BACView device. By default, a MAC address of 20 will result in a Device Instance of 16101 + 20 which would be a Device Instance of 1610120.

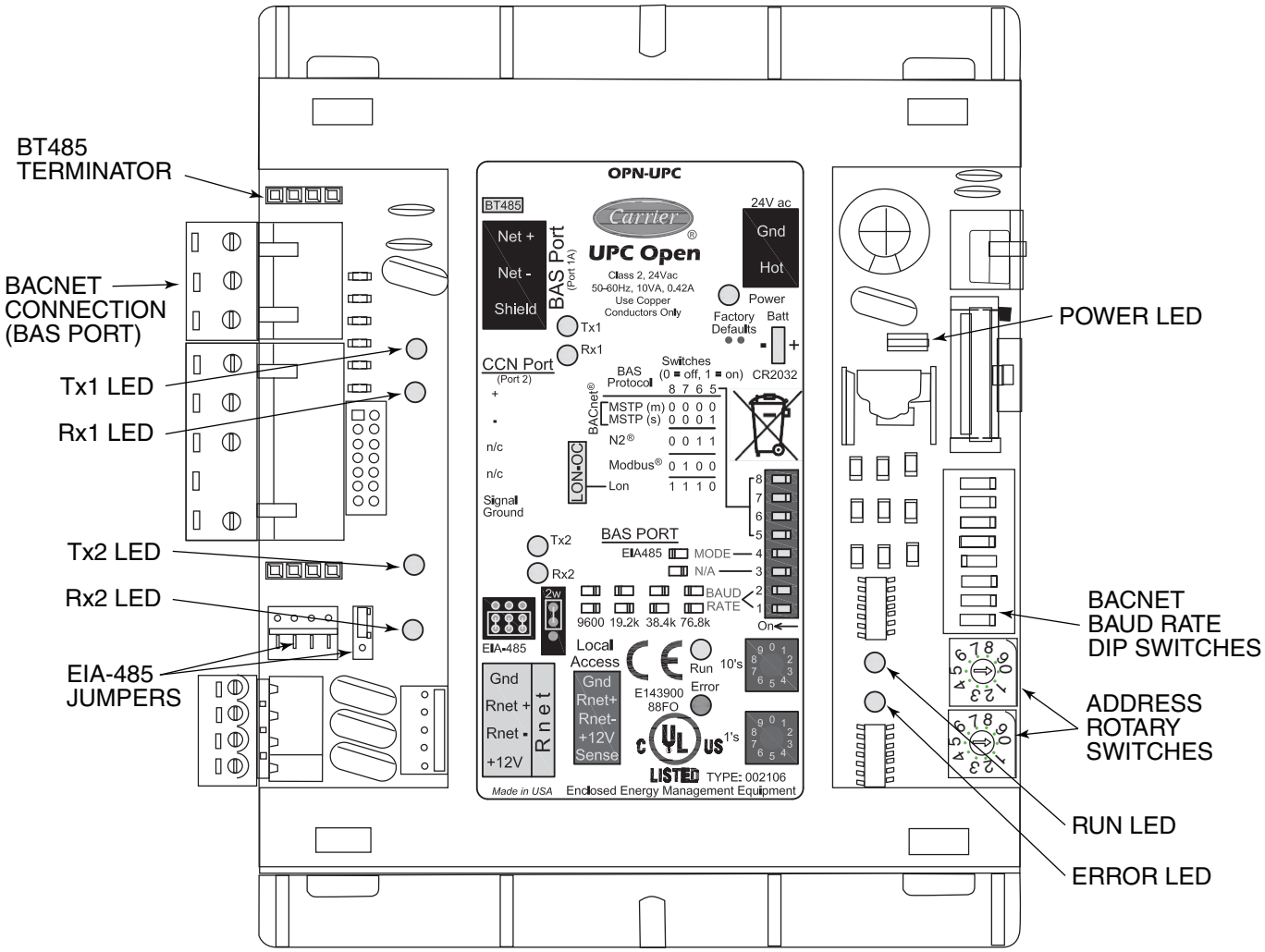

Fig. A — UPC Open Controller

* Sponsored by ASHRAE (American Society of Heating, Refrigerating, and Air-Conditioning Engineers).

CONFIGURING THE BAS PORT FOR BACNET MS/TP — Use the same baud rate and communication settings for all controllers on the network segment. The UPC Open controller is fixed at 8 data bits, No Parity, and 1 Stop bit for this protocol's communications.

If the UPC Open controller has been wired for power, pull the screw terminal connector from the controller's power terminals labeled Gnd and HOT. The controller reads the DIP Switches and jumpers each time power is applied to it.

Set the BAS Port DIP switch DS3 to "enable." Set the BAS Port DIP switch DS4 to "E1-485." Set the BMS Protocol DIP switches DS8 through DS5 to "MSTP." See Table A.

Table A — SW3 Protocol Switch Settings for MS/TP

DS8	DS7	DS6	DS5	DS4	DS3
Off	Off	Off	Off	On	Off

Verify that the EIA-485 jumpers below the CCN Port are set to EIA-485 and 2W.

The example in Fig. C shows the BAS Port DIP Switches set for 76.8k (Carrier default) and MS/TP.

Set the BAS Port DIP Switches DS2 and DS1 for the appropriate communications speed of the MS/TP network (9600, 19.2k, 38.4k, or 76.8k bps). See Fig. C and Table B.

Table B — Baud Selection Table

BAUD RATE	DS2	DS1
9,600	Off	Off
19,200	On	Off
38,400	Off	On
76,800	On	On

WIRING THE UPC OPEN CONTROLLER TO THE MS/TP NETWORK — The UPC Open controller communicates using BACnet on an MS/TP network segment communications at 9600 bps, 19.2 kbps, 38.4 kbps, or 76.8 kbps.

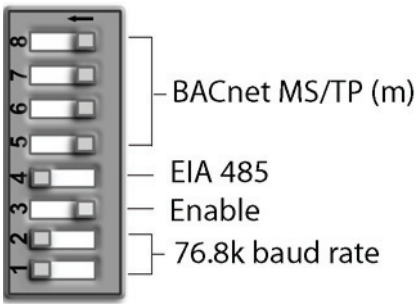

Fig. C — DIP Switches

Wire the controllers on an MS/TP network segment in a daisy-chain configuration. Wire specifications for the cable are 22 AWG (American Wire Gage) or 24 AWG, low-capacitance, twisted, stranded, shielded copper wire. The maximum length is 2000 ft.

Install a BT485 terminator on the first and last controller on a network segment to add bias and prevent signal distortions due to echoing. See Fig. A, D, and E.

To wire the UPC Open controller to the BAS network:

1. Pull the screw terminal connector from the controller's BAS Port.
2. Check the communications wiring for shorts and grounds.
3. Connect the communications wiring to the BAS port's screw terminals labeled Net +, Net -, and Shield.

NOTE: Use the same polarity throughout the network segment.

4. Insert the power screw terminal connector into the UPC Open controller's power terminals if they are not currently connected.
5. Verify communication with the network by viewing a module status report. To perform a module status report using the BACview keypad/display unit, press and hold the "FN" key then press the "." Key.

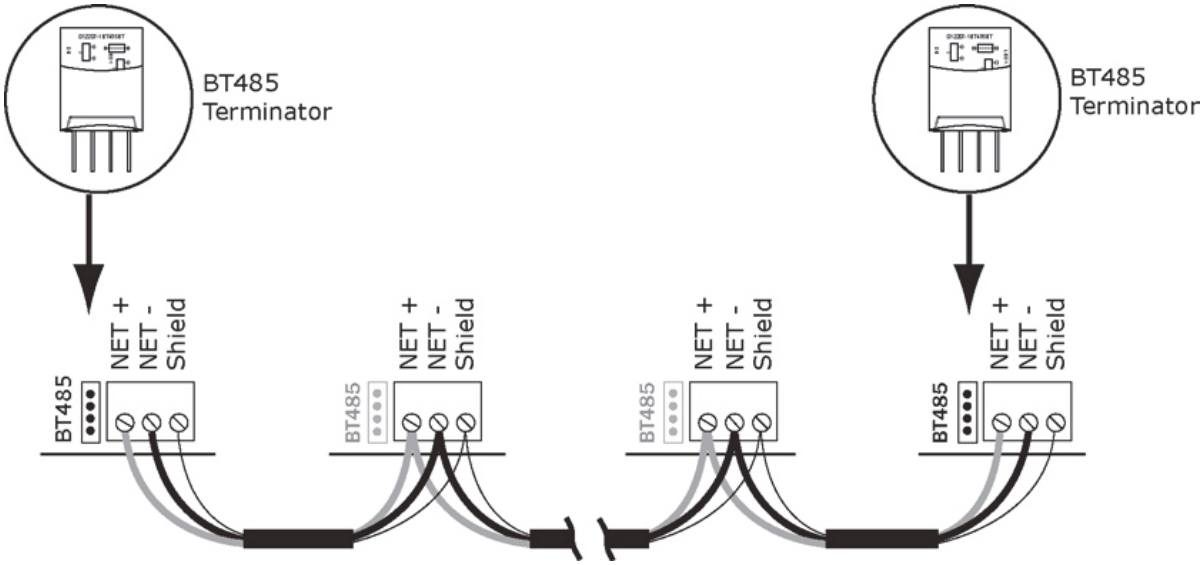

Fig. D — Network Wiring

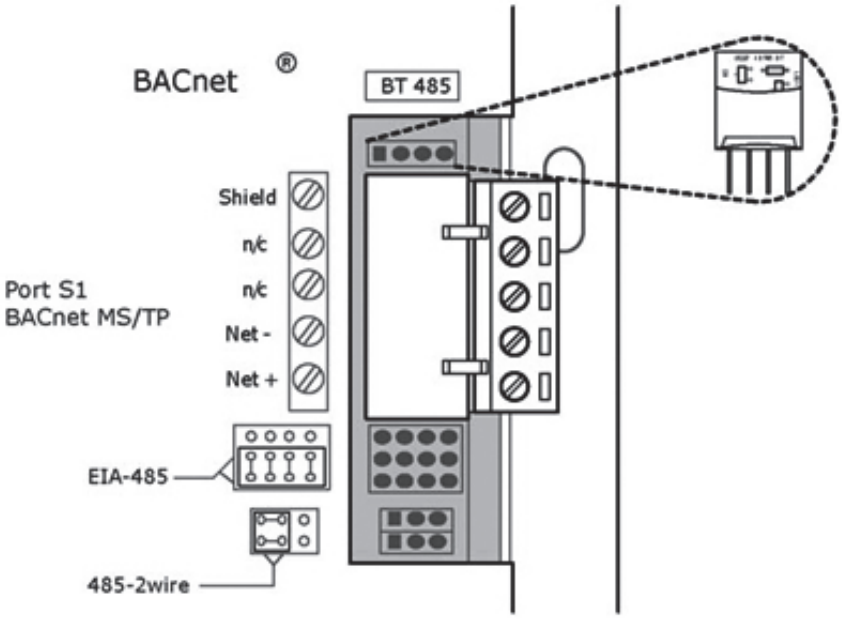

Fig. E — BT485 Terminator Installation

To install a BT485 terminator, push the BT485 terminator on to the BT485 connector located near the BACnet connector.

NOTE: The BT485 terminator has no polarity associated with it.

To order a BT485 terminator, consult Commercial Products i-Vu® Open Control System Master Prices.

MS/TP WIRING RECOMMENDATIONS — Recommendations are shown in Tables C and D. The wire jacket and UL temperature rating specifications list two acceptable alternatives. The Halar* specification has a higher temperature rating and a tougher outer jacket than the SmokeGard† specification, and it is appropriate for use in applications where the user is concerned about abrasion. The Halar jacket is also less likely to crack in extremely low temperatures.

NOTE: Use the specified type of wire and cable for maximum signal integrity.

Table C — MS/TP Wiring Recommendations

SPECIFICATION	RECOMMMENDATION
Cable	Single twisted pair, low capacitance, CL2P, 22 AWG (7x30), TC foam FEP, plenum rated cable
Conductor	22 or 24 AWG stranded copper (tin plated)
Insulation	Foamed FEP 0.015 in. (0.381 mm) wall 0.060 in. (1.524 mm) O.D.
Color Code	Black/White
Twist Lay	2 in. (50.8 mm) lay on pair 6 twists/foot (20 twists/meter) nominal
Shielding	Aluminum/Mylar shield with 24 AWG TC drain wire
Jacket	SmokeGard Jacket (SmokeGard PVC) 0.021 in. (0.5334 mm) wall 0.175 in. (4.445 mm) O.D. Halar Jacket (E-CTFE) 0.010 in. (0.254 mm) wall 0.144 in. (3.6576 mm) O.D.
DC Resistance	15.2 Ohms/1000 feet (50 Ohms/km) nominal
Capacitance	12.5 pF/ft (41 pF/meter) nominal conductor to conductor
Characteristic Impedance	100 Ohms nominal
Weight	12 lb/1000 feet (17.9 kg/km)
UL Temperature Rating	SmokeGard 167°F (75°C) Halar -40 to 302°F (-40 to 150°C)
Voltage	300 Vac, power limited
Listing	UL: NEC CL2P, or better

LEGEND

AWG — American Wire Gage
CL2P — Class 2 Plenum Cable
DC — Direct Current
FEP — Fluorinated Ethylene Polymer
NEC — National Electrical Code
O.D. — Outside Diameter
TC — Tinned Copper
UL — Underwriters Laboratories

* Registered trademark of Solvay Plastics.
† Trademark of AlphaGary-Mexichem Corp.

Table D — Open System Wiring Specifications and Recommended Vendors

WIRING SPECIFICATIONS		RECOMMENDED VENDORS AND PART NUMBERS			
Wire Type	**Description**	**Connect Air International**	**Belden**	**RMCORP**	**Contractors Wire and Cable**
MS/TP Network (RS-485)	22 AWG, single twisted shielded pair, low capacitance, CL2P, TC foam FEP, plenum rated. See MS/TP Installation Guide for specifications.	W221P-22227	—	25160PV	CLP0520LC
	24 AWG, single twisted shielded pair, low capacitance, CL2P, TC foam FEP, plenum rated. See MS/TP Installation Guide for specifications.	W241P-2000F	82841	25120-OR	—
Rnet	4 conductor, unshielded, CMP, 18 AWG, plenum rated.	W184C-2099BLB	6302UE	21450	CLP0442

LEGEND

AWG — American Wire Gage
CL2P — Class 2 Plenum Cable
CMP — Communications Plenum Rated
FEP — Fluorinated Ethylene Polymer
TC — Tinned Copper

LOCAL ACCESS TO THE UPC OPEN CONTROLLER — The user can use a BACview[6] handheld keypad display unit or the Virtual BACview software as a local user interface to an Open controller. These items let the user access the controller network information. These are accessory items and do not come with the UPC Open controller.

The BACview[6] unit connects to the local access port on the UPC Open controller. See Fig. F. The BACview software must be running on a laptop computer that is connected to the local access port on the UPC Open controller. The laptop will require an additional USB link cable for connection.

See the *BACview Installation and User Guide* for instructions on connecting and using the BACview[6] device.

To order a BACview[6] Handheld (BV6H), consult Commercial Products i-Vu Open Control System Master Prices.

CONFIGURING THE UPC OPEN CONTROLLER'S PROPERTIES — The UPC Open device and *Comfort*Link controller must be set to the same CCN Address (Element) number and CCN Bus number. The factory default settings for CCN Element and CCN Bus number are 1 and 0 respectively.

If modifications to the default Element and Bus number are required, both the *Comfort*Link and UPC Open configurations must be changed.

The following configurations are used to set the CCN Address and Bus number in the *Comfort*Link controller. These configurations can be changed using the scrolling marquee display or accessory Navigator handheld device.

Configuration→CCN→CCN.A (CCN Address)

Configuration→CCN→CCN.B (CCN Bus Number)

The following configurations are used to set the CCN Address and Bus Number in the UPC Open controller. These configurations can be changed using the accessory BACview[6] display.

Navigation: BACview→CCN
Home: Element Comm Stat
Element: 1
Bus: 0

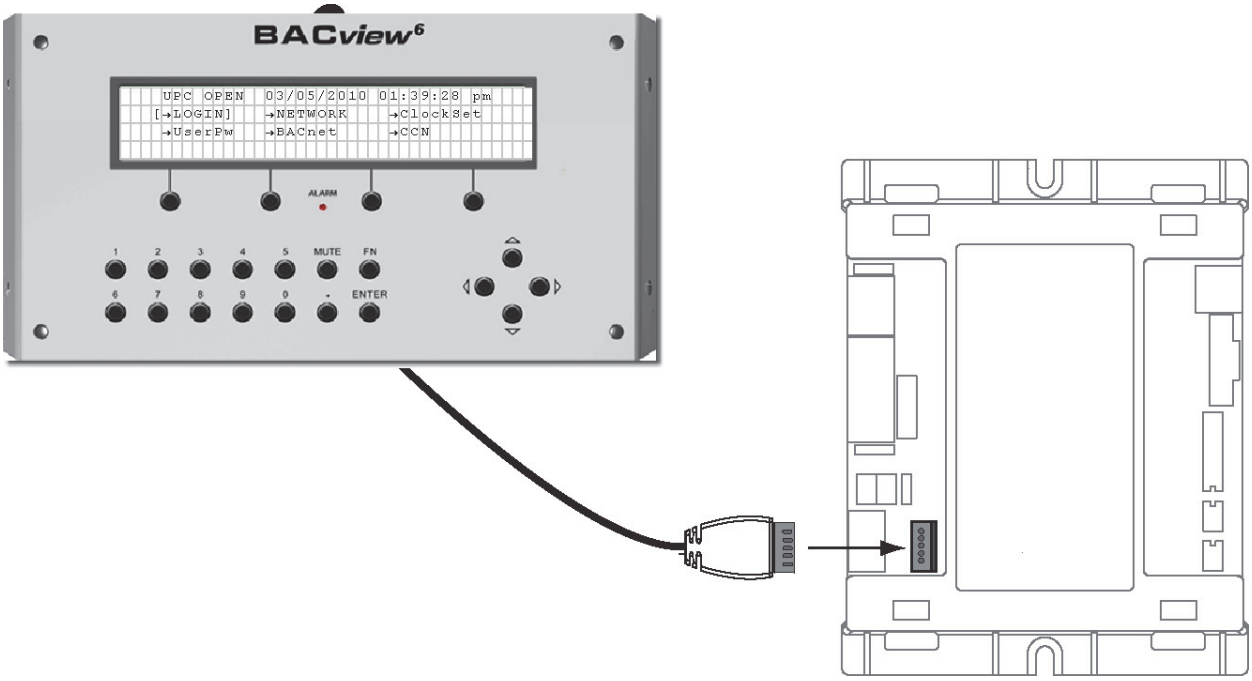

Fig. F — BACview[6] Device Connection

If the UPC Open controller is used with the chiller application of Lead/Lag/Standby, all chillers and UPC Open controller's CCN element numbers must be changed to a unique number in order to follow CCN specifications. In this application, there can only be a maximum of 3 UPC Open controllers on a CCN bus.

For the CCN Alarm Acknowledger configuration, the UPC Open defaults to CCN Acknowledger. If a Chiller Lead/Lag/Standby application is being used, then the Carrier technician must change the configuration to only one CCN Acknowledger on the CCN bus.

For the CCN Time Broadcaster configuration, the UPC Open defaults to CCN Time Broadcaster. If the Chiller Lead/Lag/Standby application is used, then the Carrier technician must change the configuration to only one CCN Time Broadcaster on the CCN bus.

TROUBLESHOOTING — If there are problems wiring or addressing the UPC Open controller, contact Carrier Technical Support.

COMMUNICATION LEDS — The LEDs indicate if the controller is communicating with the devices on the network. See Tables E and F. The LEDs should reflect communication traffic based on the baud rate set. The higher the baud rate the more solid the LEDs become. See Fig. A for location of LEDs on UPC Open module.

REPLACING THE UPC OPEN BATTERY — The UPC Open controller's 10-year lithium CR2032 battery provides a minimum of 10,000 hours of data retention during power outages.

IMPORTANT: Power must be **ON** to the UPC Open controller when replacing the battery, or the date, time, and trend data will be lost.

Remove the battery from the controller, making note of the battery's polarity. Insert the new battery, matching the battery's polarity with the polarity indicated on the UPC Open controller.

NETWORK POINTS LIST — The points list for the controller is shown in Table G.

Refer to Appendix B for additional information on CCN point name.

Table E — LED Status Indicators

LED	STATUS
Power	Lights when power is being supplied to the controller. The UPC Open controller is protected by internal solid-state polyswitches on the incoming power and network connections. These polyswitches are not replaceable and will reset themselves if the condition that caused the fault returns to normal.
Rx	Lights when the controller receives data from the network segment; there is an Rx LED for Ports 1 and 2.
Tx	Lights when the controller transmits data to the network segment; there is a Tx LED for Ports 1 and 2.
Run	Lights based on controller status. See Table F.
Error	Lights based on controller status. See Table F.

Table F — Run and Error LEDs Controller and Network Status Indication

RUN LED	ERROR LED	STATUS
2 flashes per second	Off	Normal
2 flashes per second	2 flashes, alternating with **Run** LED	Five minute auto-restart delay after system error
2 flashes per second	3 flashes, then off	Controller has just been formatted
2 flashes per second	1 flash per second	Controller is alone on the network
2 flashes per second	On	Exec halted after frequent system errors or control programs halted
5 flashes per second	On	Exec start-up aborted, Boot is running
5 flashes per second	Off	Firmware transfer in progress, Boot is running
7 flashes per second	7 flashes per second, alternating with **Run** LED	Ten second recovery period after brownout
14 flashes per second	14 flashes per second, alternating with **Run** LED	Brownout

Table G — Network Points List

POINT DESCRIPTION	CCN POINT NAME	READ/ WRITE	UNITS	DEFAULT VALUE	RANGE	BACNET OBJECT ID	BACNET OBJECT NAME
4-20 ma Demand Signal	LMT_MA	R	mA		0-20	AV:36	lmt_ma_1
4-20 ma Reset Signal	RST_MA	R	mA		0-20	AV:33	rst_ma_1
Active Demand Limit	DEM_LIM	R/W	%	100	0-100	AV:2	dem_lim_1
Active Setpoint	SP	R	°F		-20-70	AV:4	sp_1
Alarm State	ALM	R			1 = Normal 2 = Alarm 3 = Alert	BV:59	alm_1
CCN Chiller	CHIL_S_S	R/W		Start	Start/Stop	BV:4	chil_s_s_1
CCN Loadshed Signal	DL_STAT	R			0-2	AV:37	dl_stat_1
Comp A1 Unload Time	A1UNLTME	R	sec		1-15	AV:78	a1unltme_1
Compr Return Gas Temp	TMP_RGTA	R	°F		-40-245	AV:20	tmp_rgta_1
Compressor A1 Feedback	K_A1_FBK	R			On/Off	BV:16	k_a1_fbk_1
Compressor A1 Relay	K_A1_RLY	R			On/Off	BV:13	k_a1_rly_1
Compressor A1 Run Hours	HR_A1	R	hr		0-9999	AV:60	hr_a1_1
Compressor A1 Starts	CY_A1	R			0-9999	AV:68	cy_a1_1
Compressor A2 Feedback	K_A2_FBK	R			On/Off	BV:17	k_a2_fbk_1
Compressor A2 Relay	K_A2_RLY	R			On/Off	BV:14	k_a2_rly_1
Compressor A2 Run Hours	HR_A2	R	hr		0-9999	AV:61	hr_a2_1
Compressor A2 Starts	CY_A2	R			0-9999	AV:69	cy_a2_1
Compressor A3 Feedback	K_A3_FBK	R			On/Off	BV:18	k_a3_fbk_1
Compressor A3 Relay	K_A3_RLY	R			On/Off	BV:15	k_a3_rly_1
Compressor A3 Run Hours	HR_A3	R	hr		0-9999	AV:62	hr_a3_1
Compressor A3 Starts	CY_A3	R			0-9999	AV:70	cy_a3_1
Condenser Entering Fluid	COND_EWT	R	°F		-40-245	AV:10	cond_ewt_1
Condenser Leaving Fluid	COND_LWT	R	°F		-40-245	AV:18	cond_lwt_1
Condenser Pump Relay	CONDPUMP	R			On/Off	BV:2	condpump_1
Condenser Pump Run Hours	HR_DPUMP	R	hr		0-9999	AV:72	hr_dpump_1
Control Method	CONTROL	R			1 = Switch 2 = Occupancy 3 = Occupancy 4 = CCN	MSV:5	control_msv_1
Control Mode	STAT	R			0-9	AV:8	stat_1
Control Point	CTRL_PNT	R/W	°F	44.0	-20-70	AV:5	ctrl_pnt_1
Cooler Entering Fluid	COOL_EWT	R	°F		-40-245	AV:30	cool_ewt_1
Cooler Flow Switch	COOLFLOW	R			Open/Close	BV:11	coolflow_1
Cooler Fluid	FLUIDTYP	R			1 = Water 2 = Medium Brine	MSV:4	fluidtyp_msv_1
Cooler Freeze Protection	MODE_16	R			On/Off	BV:42	mode_16_1
Cooler Leaving Fluid	COOL_LWT	R	°F		-40-245	AV:31	cool_lwt_1
Cooler LWT Setpoint	LWT_SP		°F		-20-70	AV:38	lwt_sp_1
Cooler Pump Relay	COOLPUMP	R			On/Off	BV:7	coolpump_1
Cooler Pump Run Hours	HR_CPUMP	R	hr		0-9999	AV:71	hr_cpump_1
Cooler Pump Shutdown Dly	PUMP_DLY	R/W	min	1	0-10	AV:41	pump_dly_1
Cooling Ramp Loading	CRAMP	R/W	°F	1.0	0.2-2.0	AV:56	cramp_1
Cooling Reset Type	CRST_TYP	R			1 = No Reset 2 = 4-20mA Input 3 = External Temp - Oat 4 = Return Fluid 5 = External Temp - Spt	MSV:7	crst_typ1_msv_1
Cooling Setpoint 1	CSP1	R/W	°F	44.0	-20-70	AV:53	csp1_1
Cooling Setpoint 2	CSP2	R/W	°F	44.0	-20-70	AV:54	csp2_1
CSM controlling Chiller	MODE_1	R			On/Off	BV:30	mode_1_1
Demand Level 1		R/W			0-100	AV:80	dmv_lvl_1_perct_1
Demand Level 2		R/W			0-100	AV:81	dmv_lvl_2_perct_1
Demand Level 3		R/W			0-100	AV:82	dmv_lvl_3_perct_1
Demand Limit Select	DMD_CTRL	R			1 = None 2 = External Sw. Input 3 = 4-20mA Input 4 = Loadshed	MSV:8	dmd_ctrl_msv_1
Demand Limit Switch 1	DMD_SW1	R			On/Off	BV:25	dmd_sw1_1
Demand Limit Switch 2	DMD_SW2	R			On/Off	BV:26	dmd_sw2_1
Demand/Sound Limited	MODE_15	R			On/Off	BV:41	mode_15_1
Discharge Gas Temp	DISGAS	R	°F		-40-245	AV:15	disgas_1
Discharge Pressure	DP_A	R	psig		0-999	AV:13	dp_a_1

LEGEND

R — Read
W — Write

Table G — Network Points List (cont)

POINT DESCRIPTION	CCN POINT NAME	READ/ WRITE	UNITS	DEFAULT VALUE	RANGE	BACNET OBJECT ID	BACNET OBJECT NAME
Dual Setpoint	MODE_13	R			On/Off	BV:39	mode_13_1
Dual Setpoint Switch	DUAL_IN	R			On/Off	BV:29	dual_in_1
Element Comm Status		R				BV:2999	element_stat_1
Emergency Stop	EMSTOP	R/W		Enabled	Enabled/Emstop	BV:6	emstop_1
Entering Fluid Temp	EWT	R	°F		-40-245	AV:6	ewt_1
EXV% Open	EXV_A	R	%			AV:18	exv_a_1
High SCT Circuit A	MODE_21	R			On/Off	BV:47	mode_21_1
High Temperature Cooling	MODE_18	R			On/Off	BV:44	mode_18_1
Ice Done	ICE_DONE	R			On/Off	BV:27	ice_done_1
ICE Setpoint	CSP3	R/W	°F	32.0	-20-32	AV:55	csp3_1
Lead/Lag Circuit Select	LEAD_TYP	R/W		1	1-3	AV:43	lead_typ_1
Lead/Lag Leaving Fluid	DUAL_LWT	R	°F		-40-245	AV:32	dual_lwt_1
Leaving Fluid Temp	LWT	R	°F		-40-245	AV:7	lwt_1
Loading Sequence Select	SEQ_TYPE	R/W			1-2	AV:77	seq_type_1
Low Cooler Suction TempA	MODE_7	R			On/Off	BV:35	mode_7_1
Low Sound Mode	MODE_25	R			On/Off	BV:51	mode_25_1
Low Temperature Cooling	MODE_17	R			On/Off	BV:43	mode_17_1
Machine Operating Hours	HR_MACH	R	hr		0-9999	AV:57	mr_mach_1
Machine Starts	CY_MACH	R			0-9999	AV:58	cy_mach_1
Making ICE	MODE_19	R			On/Off	BV:45	mode_19_1
Master/Slave Control	MODE_3	R			On/Off	BV:32	mode_3_1
Minimum Comp. On Time	MODE_23	R			On/Off	BV:49	mode_23_1
Minimum Load Valve Relay	MLV_RLY	R			On/Off	BV:79	mlv_rly_1
Minimum OFF Time Active	MODE_10	R			On/Off	BV:38	mode_10_1
Minutes Left for Start	MIN_LEFT	R	min		00:00-15:00	AV:39	min_left_1
Minutes Off Time	DELAY	R/W	min	0	0-15	AV:42	delay_1
Occupancy Status	OCC	R			Yes/No	BV:2008	occ_status_1
Outdoor Air Temperature	OAT	R/W	°F		-40-245	AV:1003	oa_temp_1
Override Modes in Effect	MODE	R			Yes/No	BV:5	mode_1
Percent Available Cap.	CAPA_A	R	%		0-100	AV:12	capa_a_1
Percent Total Capacity	CAP_T	R	%		0-100	AV:3	cap_t_1
Percent Total Capacity	CAPA_T	R	%		0-100	AV:11	capa_t_1
Pump Off Delay Time	MODE_24	R			On/Off	BV:50	mode_24_1
Ramp Load Limited	MODE_5	R			On/Off	BV:33	mode_5_1
Requested Stage	STAGE	R			0-99	AV:9	stage_1
Saturated Condensing Tmp	TMP_SCTA	R	°F		-40-245	AV:16	tmp_scta_1
Saturated Suction Temp	TMP_SSTA	R	°F		-40-245	AV:17	tmp_ssta_1
Slow Change Override	MODE_9	R			On/Off	BV:37	mode_9_1
Space Temperature	SPT	R/W	°F		-40-245	AV:2007	space_temp_1
Storing ICE	MODE_20	R			On/Off	BV:46	mode_20_1
Strainer Maint. Done	ST_MAINT	R/W			Yes/No	BV:55	st_maint_1
Strainer Srvc Countdown	ST_CDOWN	R	hr		0-9999	AV:52	st_cdown_1
Strainer Srvc Interval	SI_STRNR	R/W	hr		0-9999	AV:51	si_strnr_1
Suction Pressure	SP_A	R	psig		0-999	AV:14	sp_a_1
Suction Superheat Temp	SH_A	R	°F		-40-245	AV:44	sh_a_1
System Cooling Demand Level		R			1-3	AV:9006	cool_demand_level_1
System Demand Limiting		R			ACTIVE_INACTIVE	BV:83	dem_lmt_act_1
Temperature Reset	MODE_14	R			On/Off	BV:40	mode_14_1
Timed Override in Effect	MODE_6	R			On/Off	BV:34	mode_6_1
User Defined Analog 1		R/W				AV:2901	user_analog_1_1
User Defined Analog 2		R/W				AV:2902	user_analog_2_1
User Defined Analog 3		R/W				AV:2903	user_analog_3_1
User Defined Analog 4		R/W				AV:2904	user_analog_4_1
User Defined Analog 5		R/W				AV:2905	user_analog_5_1
User Defined Binary 1		R/W				BV:2911	user_binary_1_1
User Defined Binary 2		R/W				BV:2912	user_binary_2_1
User Defined Binary 3		R/W				BV:2913	user_binary_3_1
User Defined Binary 4		R/W				BV:2914	user_binary_4_1
User Defined Binary 5		R/W				BV:2915	user_binary_5_1
WSM Controlling Chiller	MODE_2	R			On/Off	BV:31	mode_2_1

APPENDIX D — MAINTENANCE SUMMARY AND LOG SHEETS

30MP Weekly Maintenance Log

Plant _____
Machine Model No. _____

DATE	OIL LEVEL	CHECK ALARMS / FAULTS	OPERATOR INITIALS	REMARKS

APPENDIX D — MAINTENANCE SUMMARY AND LOG SHEETS (cont)

30MP Monthly Maintenance Log

Month			1	2	3	4	5	6	7	8	9	10	11	12
Date			/ /	/ /	/ /	/ /	/ /	/ /	/ /	/ /	/ /	/ /	/ /	/ /
Operator														

UNIT SECTION	ACTION	UNIT	ENTRY											
Compressor	Check Oil Level	yes/no												
	Leak Test	yes/no												
Cooler	Inspect and Clean Cooler	yes/no	Every 3 - 5 Years											
	Inspect Cooler Heater	amps												
	Leak Test	yes/no												
	Record Water Pressure Differential (PSI)	PSI												
	Inspect Water Pumps	yes/no												
Condenser	Leak Test	yes/no												
	Inspect and Clean Condenser Coil	yes/no												
Controls	General Cleaning and Tightening Connections	yes/no	Annually											
	Check Pressure Transducers	yes/no												
	Confirm Accuracy of Thermistors	yes/no												
Starter	General Tightening and Cleaning Connections	yes/no	Annually											
	Inspect All Contactors	yes/no												
System	Check Refrigerant Charge	yes/no												
	Verify Operation of EXVs and Record Position	0-100%												
	Record System Superheat	deg. F												

NOTE: Equipment failures caused by lack of adherence to the Maintenance Interval Requirements are not covered under warranty.

INDEX

Alarms and alerts, *65*
  Codes, *66*
  Details, *66*
  History, *66*
  Resetting, *66*
Alarm routing, *28*
Auxiliary board (AUX)
  Described, *7*
  Schematic, *15*
BACnet communication option, *94*
  BAS port, configuring, *95*
  Device instance address, *94*
  Points list, *99-100*
Capacity control, *20*
  Overrides, *21*
Carrier Comfort Network (CCN), *7*
  Tables, *88-93*
  Wiring, *16*
Chilled water flow switch, *51*
Compressors
  Adjusting oil charge, *43*
  Checking oil level, *43*
  Digital, *40*
  Discharge Check Valve, *58*
  Enabling and disabling, *58*
  Failure Alerts, *69*
  Locations, *50*
  Motor overload protection, *59*
  Motor protection, *65*
  Operating envelope, *72,73*
  Replacement, *48*
  Safeties, *58*
  Stuck on failure alarms, *70*
Compressor return gas temp sensor (RGT.A), *18*
Condenser entering fluid sensor (CDET), *18*
Condenser fan output, *30*
Condenser leaving fluid sensor (CDLT), *18*
Condenser pump control, *30*
Control methods (start/stop)
  CCN control, *28*
  Enable-Off-Remote, *24*
  Occupancy schedule, *24*
  Setting, *29*
Control module communication
  Green LED (main base board), *7*
  Red LED (main base board), *7*
  Yellow LED (main base board), *7*
Control wiring schematics
  30MP015-045, *13*
  30MP050-071, *14*
Cooling entering fluid sensor (EWT), *18*
Cooling leaving fluid sensor (LWT), *18*
Current sensing board (CSB)
  Described, *7*
Deadband multiplier, *21,22*
Demand limit, *38*
  2-stage switch controlled, *38*
  4 to 20 mA controlled, *38*
  CCN loadshed, *38*
Discharge temperature thermistor (DTT), *18*
Dual leaving water temperature sensor (DLWT), *18*
Electronic expansion valves, *20,45*
Emergency On/Off switch, *7,17*
Enable/Off/Remote Control switch, *7,17*
Energy management module (EMM), *21*
  Described, *7,20*
Evacuation and dehydration, *42*
Expansion Valve Board (EXV)
  Described, *7*
Filter drier service, *49*
High pressure switch (HPS)
  Described, *17*
  Usage, *51*
Language, changing display, *6*
LEDs, *7*
Main base board (MBB)
  Described, *7*
  Schematic, *15*
Maintenance, *57*
  Schedule, *57*
Measure of units, changing display, *6*
Minimum load control, *40*
Minutes left for start, *20*
Minutes off time, *20*
Motor overload protection, compressor, *59*
  Copeland with TF code, *59*
  Copeland with TW or TE, *60*
  CoreSense module mounting, *61*
  Kriwan, *60*
Navigator display
  Backlight brightness, *6*
  Contrast adjustment, *6*
  Display tables, *79-87*
Occupancy schedule
  CCN global, *27*
  Holidays, *24*
  Local schedule, *24*
  Setting, *24*
  Timed override, *27*
Oil
  Adjusting charge (start-up), *43*
  Checking level (start-up), *43*
  Charging (service), *49*
  Quantity per compressor, *49,50*
Operating limitations, *44*
Operating modes
  Defined, *5*
  MD06, *27*
  MD10, *20*
Outdoor-air temperature sensor (OAT), *18*
Passwords
  Changing, *7*
  Configuration and service, *7*
  Entering, *7*
Power wiring schematics
  30MP015-045 *11*
  30MP050-071 *12*
Pre-start-up, *40*
Pressure transducers
  Color, *17*
  Described, *17*
  Safeties, *51*
  Troubleshooting, *51*
Ramp loading, *22*
Refrigerant
  Adjusting charge, *42*
  Preliminary charge, *41*
Refrigeration circuit
  Charging, *45*
Safety, *2,3*
Scrolling marquee display
  Described, *3*
  Menu structure, *4*
Service, *44*
Service test, *44*
Sizes, unit, *3*
Space temperature sensor, *18*
Start-up, *41*
  Checklist, *CL-1 to CL-8*
System check (pre-start-up), *40*
Temperature reset, *35*
  4 to 20 mA temperature reset, *36*
  Menu configuration, *35*
  Outside air termperature reset, *36*
  Space temperature reset, *36*
  Return temperature reset, *37*
Thermostatic expansion valves, *20*
Thermistors
  Described, *51*
  Designations (MBB), *17*
  Performance Check, *51*
  Replacing, *51,57*
  Temperature vs. resistance/voltage drop (5K), *53,54*
  Temperature vs. resistance/voltage drop (10K), *55, 56*
  Temperature vs. resistance (86K), *56*
Time, day, date
  Broadcast, *23*
  Daylight savings time, *23*
Troubleshooting, *57*
  Alarms and alerts, *65*
  Alarm and alert codes, *66-69*
  Alarm and alert details, *66-69*
  Resetting alarms, *66-69*
UPC Open controller
  Addressing, *94*
  Battery, testing and replacing, *98*
  Configuring, *97*
  LEDs, *98*
  Local access, *97*
  Wiring, *95*
Water treatment, *48*
Wiring, Carrier Comfort Network (CCN), *16*
Wiring schematics, control
  30MP015-045, *13*
  30MP050-071, *14*
Wiring schematics, power
  30MP015-045 *11*
  30MP050-071 *12*

© Carrier Corporation 2015

START-UP CHECKLIST FOR 30MP LIQUID CHILLER

(Remove and use for job file.)

A. Preliminary Information

JOB NAME _____

LOCATION _____

INSTALLING CONTRACTOR _____

DISTRIBUTOR _____

START-UP PERFORMED BY _____

B. Preliminary Equipment Check (Yes or No)

Is there any shipping damage? _____ If so, where _____

_____

Was it noted on the freight bill?	☐ YES	☐ NO
Has a claim been filed with the shipper?	☐ YES	☐ NO
Will this damage prevent unit start-up?	☐ YES	☐ NO
Check power supply. Does it agree with unit?	☐ YES	☐ NO
Has the circuit protection been sized and installed properly?	☐ YES	☐ NO
Are the power wires to the unit sized and installed properly?	☐ YES	☐ NO
Has the ground wire been connected?	☐ YES	☐ NO
Are all electrical terminals tight?	☐ YES	☐ NO
System fluid volume in the loop _____gal (l)		
Does this meet installation guide requirements?	☐ YES	☐ NO
Water system cleaned per installation guide?	☐ YES	☐ NO
Minimum flow rates verified per installation guide?	☐ YES	☐ NO
In-line minimum 40-mesh strainer installed within 10 ft of the cooler/condenser water inlet?		
Cooler:	☐ YES	☐ NO
Condenser:	☐ YES	☐ NO
Air separation / bleed devices installed per installation guide?	☐ YES	☐ NO

C. Cooler Loop Freeze Protection (if required)

Gallons (liters) added:_____

Piping includes electric tape heaters if piping is exposed to temperatures below freezing?	☐ YES	☐ NO
On brine units, has the cooler fluid been properly protected from freezing to at least 15 F (8.3 C) below the lowest anticipated leaving fluid temperature set point?	☐ YES	☐ NO
Have the main base board, energy management module (option) and control relay connections been checked for tightness?	☐ YES	☐ NO

(30MPA ONLY)

Has the refrigerant piping been done per the installation guide? ☐ YES ☐ NO

Piping dehydrated and evacuated per installation guide? ☐ YES ☐ NO

Unit charged per the installation guide? ☐ YES ☐ NO

(ALL 30MPA AND 30MPW050-071)

Crankcase heaters have been energized for a minimum of 24 hours prior to start-up? ☐ YES ☐ NO

SIGNATURE REQUIRED

Preliminary check complete.

Installing/Mechanical Contractor_____Date_____

C. Unit Start-Up (qualified individuals only, factory start-up recommended) (insert check mark as each item is completed)

EQUIPMENT: Chiller: MODEL NO. _____ SERIAL NO. _____

COMPRESSORS:

CIRCUIT A

MODEL NO. _____

SERIAL NO. _____

Chiller has been properly interlocked with the auxiliary contacts of the chilled fluid pump starter. ☐ YES ☐ NO

Chiller has been properly interlocked with the auxiliary contacts of the condenser water pump starter (30MPW units only). ☐ YES ☐ NO

Compressor oil level is correct. ☐ YES ☐ NO

Liquid line service valve is back seated (30MPA units only). ☐ YES ☐ NO

Set point should be adjusted to the desired cooler leaving fluid temperature.

Leak check **thoroughly**: check all compressors, condenser manifolds and headers, TXVs, solenoid valves, filter driers, fusible plugs, thermistors, and cooler connections using electronic leak detector. Locate, repair, and report any refrigerant leaks.

Check voltage imbalance: AB_____ AC_____ BC_____

AB + AC + BC (divided by 3) = average voltage = _____

Maximum deviation from average voltage =_____

Voltage imbalance = (max. Deviation) x 100 = % voltage imbalance
average voltage

If over 2% voltage imbalance, do not attempt to start chiller! Call local power company for assistance.

Incoming power voltage to chiller modules is within rated unit voltage range? ☐ YES ☐ NO

CUT ALONG DOTTED LINE

CUT ALONG DOTTED LINE

CHECK PRESSURE DROP ACROSS COOLER.

Fluid entering cooler: psig (kpa)_____

Fluid leaving cooler: psig (kpa)_____

(psig difference) x 2.31 = ft of fluid pressure drop =_____

Plot cooler pressure drop on performance data chart (located in Installation Instructions literature) to determine total gpm (l/s) for fresh water systems. For glycol, contact your Carrier representative.

Total gpm (l/s) =_____ Unit's rated min gpm (l/s) =_____

Job's specified gpm (l/s) (if available): _____

NOTE: If unit has low fluid flow, find source of problem: check fluid piping, in-line fluid strainer, shut-off valves, chilled water pump rotation, etc.

VISUALLY CHECK MAIN BASE BOARD FOR THE FOLLOWING:

Inspect all thermistors and transducers for possible crossed wires. Check to be sure all well-type thermistors are fully inserted into their respective wells.

TO START THE CHILLER:

Turn the emergency on/off switch (SW2) to on position.

Turn the enable/off/remote control switch (SW1) to the enable position.

If equipped with the optional scrolling marquee, leave the enable/off/remote control switch (SW1) in the off position.

NOTE: Use escape key to go up one level in the structure.

Use arrow/escape keys to illuminate run status led. Press ENTER key until 'VERS' is displayed. Press ENTER key. Record information.

C. Unit Start-Up (cont)

Record Software Versions
MODE — RUN STATUS

	SOFTWARE VERSION NUMBERS		
VERS	MBB	CESR131482-xx-xx	
	EXV	CESR131172-xx-xx	
	EMM	CESR131174-xx-xx	
	AUX1	CESR131333-xx-xx	
	MARQ	CESR131171-xx-xx	
	NAVI	CESR130227-xx-xx	

(Press ENTER and ESCAPE simultaneously to obtain software versions)

Use arrow/escape keys to illuminate configuration LED. Press ENTER key. Record information below.

UNIT (Configuration Settings)

SUBMODE	ITEM	ITEM EXPANSION	DISPLAY	ENTRY
UNIT		UNIT CONFIGURATION		
	TYPE	UNIT TYPE		
	SIZE	UNIT SIZE	XXX	
	SZA.1	COMPRESSOR A1 SIZE	XX	
	SZA.2	COMPRESSOR A2 SIZE	XX	
	SZA.3	COMPRESSOR A3 SIZE	XX	
	A1.TY	COMPRESSOR A1 DIGITAL?	NO/YES	
	MAX.T	MAXIMUM A1 UNLOAD TIME	XX	
	EXV	EXV MODULE INSTALLED?	NO/YES	

Press ESCAPE key to display ‘UNIT’. Press down arrow key to display ‘OPT1’.
Press ENTER key. Record configuration information below:

OPTIONS1 (Options Configuration)

SUBMODE	ITEM	ITEM EXPANSION	DISPLAY	ENTRY
OPT1		UNIT OPTIONS 1 HARDWARE		
	FLUD	COOLER FLUID	X	
	MLV.S	MINIMUM LOAD VALVE SELECT	NO/YES	
	RG.EN	RETURN GAS SENSOR ENABLE	DSBL/ENBL	
	OAT.E	ENABLE OAT SENSOR	DSBL/ENBL	
	CSB.E	CSB BOARDS ENABLE	DSBL/ENBL	
	CPC	COOLER PUMP CONTROL	OFF/ON	
	PM.DY	COOLER PUMP SHUTDOWN DLY	XX MIN	
	D.PM.E	ENABLE CONDENSER PUMP	DSBL/ENBL	
	D.FL.S	ENABLE COND FLOW SWITCH	DSBL/ENBL	
	CDWS	ENABLE COND WTR SENSORS	DSBL/ENBL	

Press ESCAPE key to display ‘OPT1’. Press down arrow key to display ‘OPT2’.
Press ENTER key.

Record configuration information on next page.

CUT ALONG DOTTED LINE

CUT ALONG DOTTED LINE

C. Unit Start-Up (cont)

OPTIONS2 (Options Configuration)

SUBMODE	ITEM	ITEM EXPANSION	DISPLAY	ENTRY
OPT2		UNIT OPTIONS 2 CONTROLS		
	CTRL	CONTROL METHOD	X	
	LCWT	HIGH LCW ALERT LIMIT	XX.X ∆F	
	DELY	MINUTES OFF TIME	XX	
	ICE.M	ICE MODE ENABLE	DSBL/ENBL	

Press ESCAPE key to display ‘OPT2’. Press down arrow key to display ‘CCN’.
Press ENTER key.

Record configuration information below.

CCN (CCN Network Configuration)

SUB-MODE	ITEM	ITEM EXPANSION	DISPLAY	ENTRY
CCN	CCNA	CCN ADDRESS	XXX	
	CCNB	CCN BUS NUMBER	XXX	
	BAUD	CCN BAUD RATE	X	

Press ESCAPE key to display ‘HP.B’. Press down arrow key to display ‘EXV.A’.
Press ENTER key.

Record configuration information below.

EXV.A (Circuit A EXV Configuration)

SUB-MODE	ITEM	ITEM EXPANSION	DISPLAY	ENTRY
EXV.A	EXV.L	EXV OPENING AT LOW LWT	XX%	
	LWT.L	LWT FOR EXV MIN OPENING	XX° F	
	EXV.H	EXV OPENING AT HIGH LWT	XX%	
	LWT.H	LWT FOR EXV MAX OPENING	XX° F	
	MIN.A	EXV CIRC.A MIN POSITION	XXX	
	RNG.A	EXVA STEPS IN RANGE	XXXXX	
	SPD.A	EXVA STEPS PER SECOND	XXXXX	
	POF.A	EXVA FAIL POSITION IN%	XXX	
	MIN.A	EXVA MINIMUM STEPS	XXXXX	
	MAX.A	EXVA MAXIMUM STEPS	XXXXX	
	OVR.A	EXVA OVERRUN STEPS	XXX	
	TYP.A	EXVA STEPPER TYPE	0,1	
	H.SCT	HIGH SCT THRESHOLD	XXX	
	X.PCT	OPEN EXV X% ON 2ND COMP	XX	
	X.PER	MOVE EXV X% ON DISCRSOL	XX	
	A.PCT	PRE-OPEN EXV - FAN ADDING	XXX	
	M.PCT	PRE-CLOSE EXV - FAN SUB	XXX	
	S.PCT	PRE-CLOSE EXV - LAG SHUT	XXX	
	DELY	LAG START DELAY	XXX	
	L.DL.T	LOW SH DELTA T - EXV MOVE	XXX	
	SHR.T	EXV RATE THRESHOLD	XX.X ∆F	
	LEXM	LOW SH OVERRIDE EXV MOVE	X.X%	

C. Unit Start-Up (cont)

Press ESCAPE key several times to get to the mode level (blank display). Use the arrow keys to scroll to the set point LED. Press ENTER to display setpoints.

Record configuration information below:

SETPOINT

SUBMODE	ITEM	ITEM EXPANSION	DISPLAY	ENTRY
COOL		COOLING SETPOINTS		
	CSP.1	COOLING SETPOINT 1	XXX.X °F	
	CSP.2	COOLING SETPOINT 2	XXX.X °F	
	CSP.3	ICE SETPOINT	XXX.X °F	
HEAD		HEAD PRESSURE SETPOINTS		
	H.DP	HEAD SET POINT	XXX.X °F	
FRZ		BRINE FREEZE SETPOINT		
	BR.FZ	BRINE FREEZE POINT	XX.X °F	

COMPONENT TEST

USE ESCAPE/ARROW KEYS TO ILLUMINATE CONFIGURATION LED. PRESS ENTER TO DISPLAY 'DISP'. PRESS ENTER AGAIN TO DISPLAY 'TEST' FOLLOWED BY 'OFF'. PRESS ENTER TO STOP DISPLAY AT 'OFF' AND ENTER AGAIN SO 'OFF' DISPLAY FLASHES. 'PASS' AND 'WORD' WILL FLASH IF PASSWORD NEEDS TO BE ENTERED. PRESS ENTER TO DISPLAY 'PASSWORD' FIELD AND USE THE ENTER KEY FOR EACH OF THE FOUR PASSWORD DIGITS. USE ARROW KEYS IF PASSWORD IS OTHER THAN STANDARD. AT FLASHING 'OFF' DISPLAY, PRESS THE UP ARROW KEY TO DISPLAY 'ON' AND PRESS ENTER. ALL LED SEGMENTS AND MODE LEDS WILL LIGHT UP. PRESS ESCAPE TO STOP THE TEST. PRESS ESCAPE TO RETURN TO THE 'DISP' DISPLAY. PRESS THE ESCAPE KEY AGAIN AND USE THE ARROW KEYS TO ILLUMINATE THE SERVICE TEST LED. PRESS ENTER TO DISPLAY 'TEST'. PRESS ENTER TO STOP DISPLAY AT 'OFF' AND ENTER AGAIN SO 'OFF' FLASHES. PRESS THE UP ARROW KEY AND ENTER TO ENABLE THE MANUAL MODE. PRESS ESCAPE AND DISPLAY NOW SAYS 'TEST' 'ON'. TURN SWITCH (SW1) TO THE ENABLE POSITION.

PRESS THE DOWN ARROW TO DISPLAY 'OUTS'. PRESS THE ENTER KEY TO DISPLAY 'LL.SV'. PRESS THE ENTER KEY TO STOP DISPLAY AT 'OFF' AND ENTER AGAIN SO 'OFF' FLASHES. PRESS THE UP ARROW KEY AND ENTER TO TURN THE OUTPUT ON. PRESS ENTER SO THE 'ON' DISPLAY FLASHES, PRESS THE DOWN ARROW KEY AND THEN ENTER TO TURN THE OUTPUT OFF. OUTPUTS WILL ALSO BE TURNED OFF OR SENT TO 0% WHEN ANOTHER OUTPUT IS TURNED ON. CHECK OFF THE ITEMS IN THE SERVICE TEST TABLE ON THE NEXT PAGE THAT APPLY AFTER BEING TESTED.

CUT ALONG DOTTED LINE

CUT ALONG DOTTED LINE

C. Unit Start-Up (cont)

USE ESCAPE KEY TO RETURN TO ‘OUTS’ DISPLAY. PRESS DOWN ARROW TO DISPLAY ‘CMPA’. PRESS ENTER KEY TO DISPLAY ‘CC.A1’. NOTE THAT UNLOADERS AND HOT GAS BYPASS SOLENOIDS CAN BE TESTED BOTH WITH AND WITHOUT COMPRESSOR(S) RUNNING. MAKE SURE ALL SERVICE VALVES ARE OPEN AND COOLER/CONDENSER PUMPS HAVE BEEN TURNED ON BEFORE STARTING COMPRESSORS. CHECK OFF EACH ITEM AFTER SUCCESSFUL TEST. THE CONTROL WILL ONLY START ONE COMPRESSOR PER MINUTE. WHEN AT THE DESIRED ITEM, PRESS THE ENTER KEY TWICE TO MAKE THE ‘OFF’ FLASH. PRESS THE UP ARROW KEY AND ENTER TO TURN THE OUTPUT ON. CHECK OFF THE ITEMS IN THE SERVICE TEST TABLE BELOW THAT APPLY AFTER BEING TESTED.

SERVICE TEST

SUB-MODE	KEYPAD ENTRY	ITEM	DISPLAY	ITEM EXPANSION	COMMENT	Completed (Yes/No)
TEST	ENTER		OFF/ON	SERVICE TEST MODE	To Enable Service Test Mode, move Enable/Off/Remote Contact switch to OFF. Change TEST to ON. Move switch to ENABLE.	
OUTS	OUTPUTS AND PUMPS					
	ENTER	CLR.P	OFF/ON	COOLER PUMP RELAY		
	↓	CND.P	OFF/ON	CONDENSER PUMP		
	↓	UL.TM	0 TO 15	COMP A1 UNLOAD TIME		
	↓	CC.H	OFF/ON	CRANKCASE HEATER		
	↓	CW.VO	OFF/ON	CONDENSER VALVE OPEN		
	↓	CW.VC	OFF/ON	CONDENSER VALVE CLOSE		
	↓	LL.SV	OFF/ON	LIQUID LINE SOLENOID		
	↓	RMT.A	OFF/ON	REMOTE ALARM RELAY		
	↓	EXV.A	XXX%	EXV% OPEN		
CMPA	CIRCUIT A COMPRESSOR TEST					
	ENTER	CC.A1	OFF/ON	COMPRESSOR A1 RELAY		
	↓	UL.TM	0 TO 15	COMP A1 UNLOAD TIME		
	↓	CC.A2	OFF/ON	COMPRESSOR A2 RELAY		
	↓	CC.A3	OFF/ON	COMPRESSOR A3 RELAY		
	↓	MLV	OFF/ON	MINIMUM LOAD VALVE RELAY		

Use arrow/escape keys to illuminate the temperatures led. Press ENTER to display 'UNIT'. Press ENTER and use the arrow keys to record temperatures for sensors below.

TEMPERATURE

CLWT _____

CEWT _____

CDET _____

CDLT _____

OAT or DLWT _____

SPT _____

C. Unit Start-Up (cont)

ALL UNITS:

Measure the following (measure while machine is in a stable operating condition): Check and adjust superheat as required.

	CIRCUIT A
DISCHARGE PRESSURE	_____
SUCTION PRESSURE	_____
DISCHARGE LINE TEMP	_____
SUCTION LINE TEMP	_____
COOLER ENTERING FLUID	_____
COOLER LEAVING FLUID	_____
CONDENSER ENTERING FLUID	_____
CONDENSER LEAVING FLUID	_____
EXV POSITION (UNIT SIZES 050-071)	_____

Check and adjust superheat as required.

COMMENTS:

_____

_____

_____

_____

_____

_____

_____

_____

_____

_____

_____

_____

_____

_____

SIGNATURES:

START-UP TECHNICIAN _____ DATE_____

CUSTOMER REPRESENTATIVE _____ DATE_____

CUT ALONG DOTTED LINE

CUT ALONG DOTTED LINE

© Carrier Corporation 2015