# WeatherMaker®
# 48FE 08-12
# Single Package Rooftop with Gas Heat/Electric Cooling

# Installation Instructions

## CONTENTS


Page

**SAFETY CONSIDERATIONS** . . . . . 1
**GENERAL** . . . . . 3
**Rated Indoor Airflow (cfm)** . . . . . 3
**Pre-Installation** . . . . . 3
**INSTALLATION** . . . . . 8
**Step 1 — Plan for Unit Location** . . . . . 8
- ROOF MOUNT

**Step 2 — Plan for Sequence of Unit Installation** . . . 8
- CURB-MOUNTED INSTALLATION
- PAD-MOUNTED INSTALLATION
- FRAME-MOUNTED INSTALLATION

**Step 3 — Inspect Unit** . . . . . 8
**Step 4 — Provide Unit Support** . . . . . 8
- ROOF CURB MOUNT
- SLAB MOUNT (HORIZONTAL UNITS ONLY)
- ALTERNATE UNIT SUPPORT (IN LIEU OF CURB OR SLAB MOUNT)

**Step 5 — Field Fabricate Ductwork** . . . . . 10
**Step 6 — Rig and Place Unit** . . . . . 10
- POSITIONING ON CURB

**Step 7 — Convert to Horizontal and Connect Ductwork (When Required)** . . . . . 11
**Step 8 — Install Outside Air Hood** . . . . . 12
- ECONOMIZER HOOD PACKAGE REMOVAL (FACTORY OPTION)
- ECONOMIZER HOOD SETUP

**Step 9 — Install Flue Hood** . . . . . 13
**Step 10 — Install Gas Piping** . . . . . 13
- FACTORY OPTION THRU-BASE GAS CONNECTIONS

**Step 11 — Install External Condensate Trap and Line** . . . . . 16
**Step 12 — Make Electrical Connections** . . . . . 16
- FIELD POWER SUPPLY
- FIELD POWER WIRING CONNECTION
- UNITS WITH FACTORY-INSTALLED NON-FUSED DISCONNECT
- UNITS WITHOUT FACTORY-INSTALLED NON-FUSED DISCONNECT
- FIELD WIRING COMPLIANCE
- CONVENIENCE OUTLETS
- ALL UNITS
- FACTORY-OPTION THRU-BASE CONNECTIONS (ELECTRICAL CONNECTIONS)
- HUMIDI-MIZER® CONTROL CONNECTIONS
- TYPICAL UNIT WIRING DIAGRAMS

**Integrated Gas Controller** . . . . . 26
**Leak Dissipation System** . . . . . 28
- SEQUENCE OF OPERATION
- LEAK DISSIPATION SYSTEM SELF-TEST
- TROUBLESHOOTING

**Humidi-MiZer Dehumidification System (Optional)** . . . . . 31
- NORMAL COOLING
- DEHUM/MECH COOLING (SUBCOOLING) MODE
- DEHUMIDIFICATION (HOT GAS REHEAT) MODE
- REHEAT CONTROL

**Temporary Furnace Operation During Construction** . . . . . 32
**EconomizerONE (Factory Option)** . . . . . 33
- ECONOMIZER SETTINGS
- WIRING
- SETUP AND CONFIGURATION
- INSTALLING OPTIONAL HH57LW001 SINGLE OUTSIDE AIR ENTHALPY SENSOR
- CHECKOUT
- TROUBLESHOOTING

**SystemVu™ Controller (Factory Option)** . . . . . 54
- SMOKE DETECTORS
- COMPLETING INSTALLATION OF RETURN-AIR SMOKE SENSOR
- ADDITIONAL APPLICATION DATA

**Step 13 — Adjust Factory-Installed Options** . . . . . 55
- SMOKE DETECTORS
- ECONOMIZERONE OCCUPANCY SWITCH

**Step 14 — Install Accessories** . . . . . 55
**Step 15 — Fan Speed Set Up** . . . . . 55
- UNITS WITH ELECTRO-MECHANICAL CONTROLS
- UNITS WITH SYSTEMVU™ CONTROLS

**FASTENER TORQUE VALUES** . . . . . 57
**START-UP CHECKLIST** . . . . . CL-1


## SAFETY CONSIDERATIONS

Installation and servicing of air-conditioning equipment can be hazardous due to system pressure and electrical components. Only trained and qualified service personnel should install, repair, or service air-conditioning equipment.

Untrained personnel can perform basic maintenance functions of cleaning coils and filters and replacing filters. All other operations should be performed by trained service personnel. When working on air-conditioning equipment, observe precautions in the literature, tags and labels attached to the unit, and other safety precautions that may apply.

Follow all safety codes, including ANSI (American National Standards Institute) Z223.1. Wear safety glasses and work gloves. Use quenching cloth for unbrazing operations. Have fire extinguisher available for all brazing operations.

It is important to recognize safety information. This is the safety-alert symbol ⚠. When you see this symbol on the unit and in instructions or manuals, be alert to the potential for personal injury.


**Manufacturer reserves the right to discontinue, or change at any time, specifications or designs without notice and without incurring obligations.**

Understand the signal words DANGER, WARNING, CAUTION, and NOTE. These words are used with the safety-alert symbol. DANGER identifies the most serious hazards which **will** result in severe personal injury or death. WARNING signifies hazards which **could** result in personal injury or death. CAUTION is used to identify unsafe practices, which **may** result in minor personal injury or product and property damage. NOTE is used to highlight suggestions which **will** result in enhanced installation, reliability, or operation.

**⚠ DANGER**

ELECTRICAL SHOCK HAZARD

Failure to follow this warning will result in personal injury or death.

Before performing service or maintenance operations on unit, turn off main power switch to unit and install lock(s) and lockout tag(s). Ensure electrical service to rooftop unit agrees with voltage and amperage listed on the unit rating plate. Unit may have more than one power switch.

**⚠ WARNING**

FIRE, EXPLOSION HAZARD

Failure to follow this warning could result in death, serious personal injury and/or property damage.

Disconnect gas piping from unit when pressure testing at pressure greater than 0.5 psig (3450 Pa). Pressures greater than 0.5 psig will cause gas valve damage resulting in hazardous condition. If gas valve is subjected to pressure greater than 0.5 psig, it must be replaced before use. When pressure testing field-supplied gas piping at pressures of 0.5 psig or less, a unit connected to such piping must be isolated by closing the manual gas valve(s).

**⚠ WARNING**

UNIT OPERATION AND SAFETY HAZARD

Failure to follow this warning could cause personal injury, death and/or equipment damage.

R-454B is an A2L refrigerant. All service equipment or components must be A2L refrigerant rated. Do not use non-A2L rated equipment or components on R-454B refrigerant equipment

**⚠ WARNING**

PERSONAL INJURY AND ENVIRONMENTAL HAZARD

Failure to follow this warning could cause personal injury or death.

Relieve pressure and recover all refrigerant before system repair or final unit disposal.

Wear safety glasses and gloves when handling refrigerants. Keep torches and other ignition sources away from refrigerants and oils.

**⚠ WARNING**

CARBON-MONOXIDE POISONING HAZARD

Failure to follow instructions could result in severe personal injury or death due to carbon-monoxide poisoning, if combustion products infiltrate into the building.

Check that all openings in the outside wall around the vent (and air intake) pipe(s) are sealed to prevent infiltration of combustion products into the building.

Check that furnace vent (and air intake) terminal(s) are not obstructed in any way during all seasons.

**⚠ AVERTISSEMENT**

RISQUE D'INTOXICATION AU MONOXYDE DE CARBONE

Si ces directives ne sont pas suivies, cela peut entraîner des blessures graves ou une intoxication au monoxyde de carbone pouvant causer la mort, si des produits de combustion s'infiltrent dans le bâtiment.

Vérifier que toutes les ouvertures pratiquées dans le mur extérieur autour du ou des tuyaux d'évent (et de la prise d'air) sont scellées de manière à empêcher l'infiltration de produits de combustion dans le bâtiment.

Veiller à ce que la ou les sorties de l'évent de l'appareil de chauffage (et la prise d'air) ne soient, en aucune façon, obstruées, quelle que soit la saison.

**⚠ WARNING**

FIRE HAZARD

Failure to follow this warning could result in severe personal injury and/or property damage.

Inlet pressure tap set screw must be tightened and 1/8 in. NPT pipe plug must be installed to prevent gas leaks.

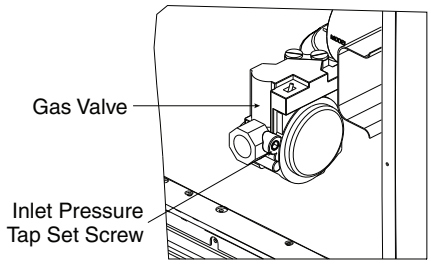

**⚠ WARNING**

FIRE HAZARD

Failure to follow this warning could result in severe personal injury and/or property damage.

Manifold pressure tap set screw must be tightened and 1/8 in. NPT pipe plug must be installed to prevent gas leaks.

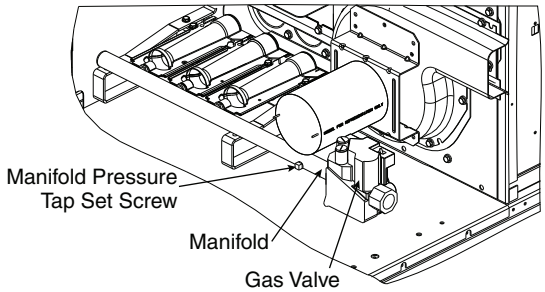


**⚠ WARNING**

Use caution when servicing compressor terminal pins. System or compressor abnormalities can dislodge pins allowing oil and refrigerant to vent under pressure.

**⚠ AVERTISSEMENT**

Soyez prudent lors de l'entretien des bornes du compresseur. Les anomalies du système ou du compresseur peuvent déloger les bornes, permettant à l'huile et au réfrigérant de s'évacuer sous pression.

**⚠ CAUTION**

PERSONAL INJURY HAZARD

Failure to follow this caution may result in personal injury.

Sheet metal parts may have sharp edges or burrs. Use care and wear appropriate protective clothing, safety glasses and gloves when handling parts and servicing air conditioning equipment.

## GENERAL

These installation instructions cover the 48FE size 08-12 units with gas heat and electric cooling. Units are pre-wired and pre-charged with environmentally balanced Puron® Advance (R-454B) refrigerant at the factory.

See Fig. 1 for model number nomenclature. See Fig. 2 for unit dimensions and service clearances.

**⚠ CAUTION**

Ensure clearances are in accordance with local installation codes, the requirements of the gas supplier and the manufacturer's installation instructions.

**⚠ ATTENTION**

Assurez-vous que les dégagements sont conformes aux codes d'installation locaux, aux exigences du fournisseur de gaz et aux instructions d'installation du fabricant.

### Rated Indoor Airflow (cfm)

Table 1 lists the rated indoor airflow used for the AHRI efficiency rating for the units covered in this document.

**Table 1 — AHRI Efficiency — Rated Indoor Airflow**

| MODEL NUMBER | FULL LOAD AIRFLOW (cfm) |
|---|---|
| 48FE**08 | 2650 |
| 48FE**09 | 3400 |
| 48FE**12 | 3500 |

### Pre-Installation

Complete the following checks before installation.

1. Consult local building codes and the NEC (National Electrical Code) ANSI/NFPA 70 for special installation requirements.
2. Determine unit location (from project plans) or select unit location.
3. Check for possible overhead obstructions which may interfere with unit lifting or rigging.

| Position: | 1 | 2 | 3 | 4 | 5 | 6 | 7 | 8 | 9 | 10 | 11 | 12 | 13 | 14 | 15 | 16 | 17 | 18 |
|---|---|---|---|---|---|---|---|---|---|---|---|---|---|---|---|---|---|---|
| Example: | 4 | 8 | F | E | D | M | 0 | 8 | A | 2 | A | 5 | - | 8 | A | 0 | A | 0 |

**Unit Heat Type**
48 = Gas Heat Packaged Rooftop

**Model Series - WeatherMaker®**
FE = Entry Tier Puron® Advance

**Heat Size**
D = Low Heat
E = Medium Heat
F = High Heat
S = Low Heat with Stainless Steel Exchanger
R = Medium Heat with Stainless Steel Exchanger
T = High Heat with Stainless Steel Exchanger

**Refrig. Systems Options**
M = Two-Stage Cooling/One-Circuit Models
N = Two-Stage Cooling/One-Circuit Models with Humidi-MiZer® System[a]

**Cooling Tons**
08 = 7.5 tons
09 = 8.5 tons
12 = 10.0 tons

**Sensor Options**
A = None
B = Return Air Smoke Detector (RA)
C = Supply Air Smoke Detector (SA)
D = RA + SA Smoke Detector
J = Condensate Overflow Switch (COFS)
K = Condensate Overflow Switch + RA Smoke Detectors
L = Condensate Overflow Switch + RA and SA Smoke Detectors
M = Condensate Overflow Switch + SA Smoke Detector

**Fan Options**
2 = Standard/Medium Static – EcoBlue™ Vane Axial Fan
3 = High Static – EcoBlue Vane Axial Fan
5 = Standard/Medium Static – EcoBlue Vane Axial Fan and Filter Status Switch
6 = High Static – EcoBlue Vane Axial Fan and Filter Status Switch

**RTPF Coil Options (Outdoor – Indoor –Hail Guard)**
A = Al/Cu – Al/Cu
B = Precoat Al/Cu – Al/Cu
C = E-coat Al/Cu – Al/Cu
D = E-coat Al/Cu – E-coat Al/Cu
M = Al/Cu – Al/Cu — Louvered Hail Guard
N = Precoat Al/Cu – Al/Cu — Louvered Hail Guard
P = E-coat Al/Cu – Al/Cu — Louvered Hail Guard
Q = E-coat Al/Cu – E-coat Al/Cu — Louvered Hail Guard
R = Cu/Cu – Al/Cu — Louvered Hail Guard
S = Cu/Cu – Cu/Cu — Louvered Hail Guard

**Voltage**
1 = 575-3-60
5 = 208/230-3-60
6 = 460-3-60

**Design Revision**
- = Factory Design Revision

**Base Unit Controls**
0 = Standard Electro-mechanical Controls (can be used with field installed economizers and dampers)
3 = SystemVu™ Controller
8 = Electro-mechanical Controls with POL224 (includes FDD[c])

**Intake / Exhaust Options**
A = None
B = Standard Leak Economizer with Barometric Relief
F = Standard Leak Enthalpy Economizer with Barometric Relief
L = ULL (Ultra Low Leak) Temperature Economizer with Barometric Relief and $CO_2$ Sensor
M = ULL Enthalpy Economizer with Barometric Relief and $CO_2$ Sensor
U = ULL Temperature Economizer with Barometric Relief
W = ULL Enthalpy Economizer with Barometric Relief

**Service Options**
0 = None
1 = Unpowered Convenience Outlet (NPCO)
2 = Powered Convenience Outlet (PCO)
3 = Hinged Panels (HP)
4 = Hinged Panels + NPCO
5 = Hinged Panels + PCO
6 = 4-Inch MERV-13 Filters (M13)
7 = NPCO + MERV-13 Filters
8 = PCO + MERV-13 Filters
9 = Hinged Panels + MERV-13 Filters
A = HP + NPCO + MERV-13 Filters
B = HP + PCO + MERV-13 Filters

**Electrical Options**
A = None
C = Non-Fused Disconnect (NFDC)
D = Thru-The-Base Connections (TTB)
F = NFDC + TTB
N = Phase Monitor Protection (PMR)
Q = PMR + NFDC
R = PMR + TTB
T = PMR + NFDC + TTB
1 = HSCCR[b] (High Short Circuit Current Rating)
2 = HSCCR[b] + TTB

**Packaging**
0 = Standard

NOTE (S):
[a] Units with Humidi-MiZer System include Low Ambient controller.
[b] Not available on the following models/options: 575V, Phase Loss Monitor, Non-Fused Disconnect, or Powered Convience Outlet.
[c] Fault Detection and Diagnostic

**Fig. 1 — 48FE 08-12 Model Number Nomenclature**

NOTES:

1. DIMENSIONS ARE IN INCHES, DIMENSIONS IN [ ] ARE IN MILLIMETERS.
2. CENTER OF GRAVITY
3. DIRECTION OF AIR FLOW
4. ALL VIEW DRAWN USING 3RD ANGLE

| UNIT | OUTDOOR COIL TYPE | J | K | H |
|---|---|---|---|---|
| 48FE-M08 | RTPF | 41 1/4 [1048] | 33 3/4 [857] | 15 7/8 [403] |
| 48FE-M09 | RTPF | 49 3/8 [1253] | 36 3/8 [925] | 15 7/8 [403] |
| 48FE-M12 | RTPF | 49 3/8 [1253] | 36 3/8 [925] | 15 7/8 [403] |
| RTPF - ROUND TUBE, PLATE FIN (COPPER/ALUM) | | | | |

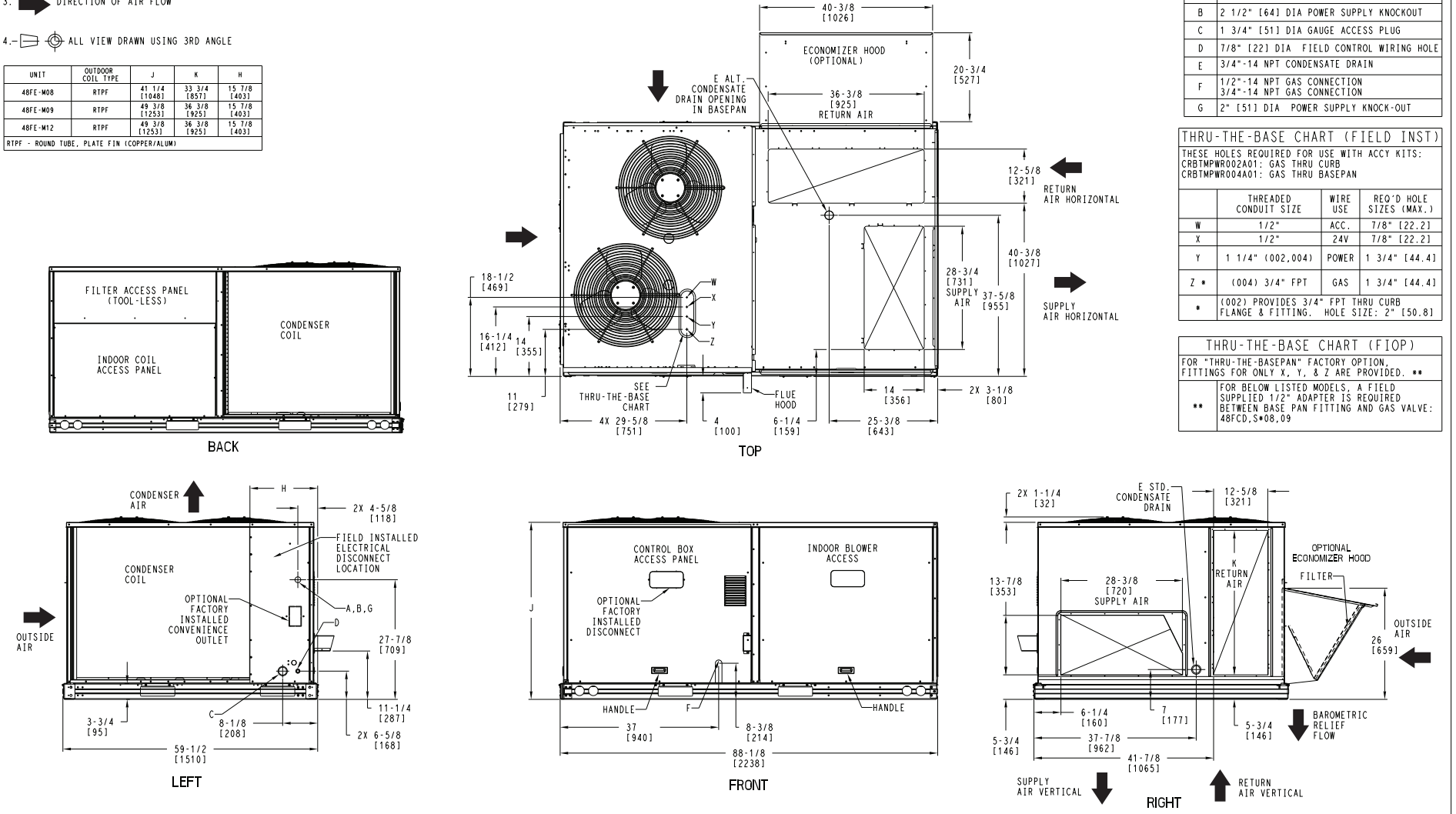


| CONNECTION SIZES | |
|---|---|
| A | 1 3/8" [35] DIA FIELD POWER SUPPLY HOLE |
| B | 2 1/2" [64] DIA POWER SUPPLY KNOCKOUT |
| C | 1 3/4" [51] DIA GAUGE ACCESS PLUG |
| D | 7/8" [22] DIA FIELD CONTROL WIRING HOLE |
| E | 3/4"-14 NPT CONDENSATE DRAIN |
| F | 1/2"-14 NPT GAS CONNECTION<br>3/4"-14 NPT GAS CONNECTION |
| G | 2" [51] DIA POWER SUPPLY KNOCK-OUT |

THRU-THE-BASE CHART (FIELD INST)

THESE HOLES REQUIRED FOR USE WITH ACCY KITS:
CRBTMPWR002A01: GAS THRU CURB
CRBTMPWR004A01: GAS THRU BASEPAN

| | THREADED CONDUIT SIZE | WIRE USE | REQ'D HOLE SIZES (MAX.) |
|---|---|---|---|
| W | 1/2" | ACC. | 7/8" [22.2] |
| X | 1/2" | 24V | 7/8" [22.2] |
| Y | 1 1/4" (002,004) | POWER | 1 3/4" [44.4] |
| Z * | (004) 3/4" FPT | GAS | 1 3/4" [44.4] |
| * | (002) PROVIDES 3/4" FPT THRU CURB FLANGE & FITTING. HOLE SIZE: 2" [50.8] | | |

THRU-THE-BASE CHART (FIOP)

FOR "THRU-THE-BASEPAN" FACTORY OPTION, FITTINGS FOR ONLY X, Y, & Z ARE PROVIDED. **

| | |
|---|---|
| ** | FOR BELOW LISTED MODELS, A FIELD SUPPLIED 1/2" ADAPTER IS REQUIRED BETWEEN BASE PAN FITTING AND GAS VALVE: 48FCD,S*08,09 |

Carrier
THIS DOCUMENT IS THE PROPERTY OF CARRIER CORPORATION AND IS DELIVERED UPON THE EXPRESS CONDITION THAT THE CONTENTS WILL NOT BE DISCLOSED OR USED WITHOUT CARRIER CORPORATION'S WRITTEN CONSENT.
SUBMISSION OF THESE DRAWINGS OR DOCUMENTS DOES NOT CONSTITUTE PART PERFORMANCE OR ACCEPTANCE OF CONTRACT.

| ITC CLASSIFICATION | SHEET | DATE | SUPERCEDES | | | REV |
|---|---|---|---|---|---|---|
| U.S. ECCN:NSR | 1 OF 3 | 8/8/23 | - | 48FE 08-12 SINGLE ZONE ELECTRICAL COOLING WITH GAS HEAT | 48TM009320 | - |

**Fig. 2 — Unit Dimensional Drawing – Sizes 08, 09, 12**

| UNIT | OUTDOOR COIL TYPE | STD. UNIT WEIGHT *** | | CORNER WEIGHT (A) | | CORNER WEIGHT (B) | | CORNER WEIGHT (C) | | CORNER WEIGHT (D) | | C.G. | | |
|---|---|---|---|---|---|---|---|---|---|---|---|---|---|---|
| | | LBS. | KG. | LBS. | KG. | LBS. | KG. | LBS. | KG. | LBS. | KG. | X | Y | Z |
| 48FE-M08 | RTPF | 787 | 357 | 181 | 82 | 150 | 68 | 207 | 94 | 249 | 113 | 40 [1016] | 34 1/2 [876] | 19 3/8 [492] |
| 48FE-M09 | RTPF | 868 | 394 | 197 | 89 | 160 | 73 | 229 | 104 | 282 | 128 | 39 1/2 [1003] | 35 [889] | 18 5/8 [473] |
| 48FE-M12 | RTPF | 878 | 398 | 213 | 97 | 175 | 80 | 221 | 100 | 268 | 121 | 39 7/8 [1013] | 33 1/4 [841] | 18 1/2 [470] |
| RTPF - ROUND TUBE, PLATE FIN (COPPER/ALUM) | | | | | | | | | | | | | | |

*** STANDARD UNIT WEIGHT IS WITH LOW GAS HEAT AND WITHOUT PACKAGING.
FOR OTHER OPTIONS AND ACCESSORIES, REFER TO THE PRODUCT DATA CATALOG.

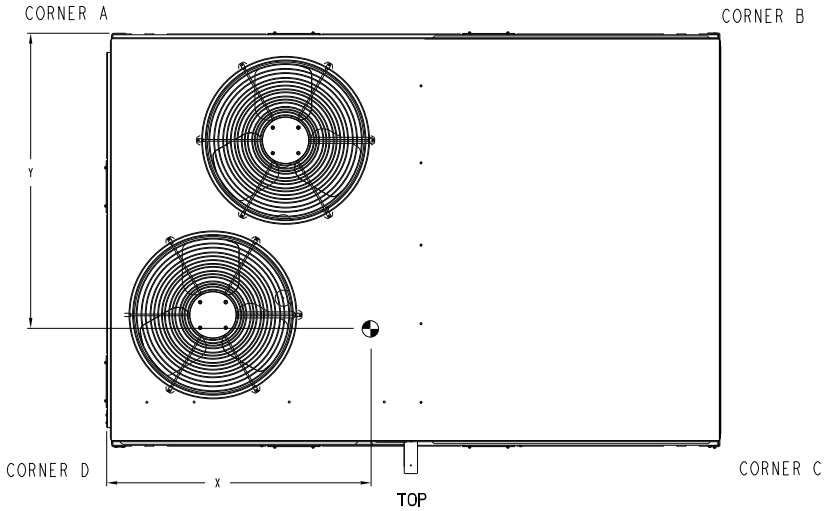


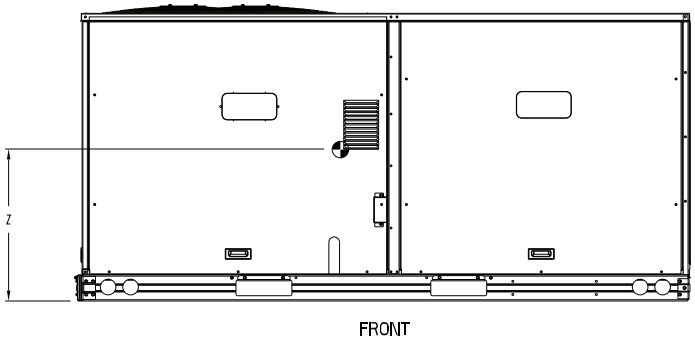


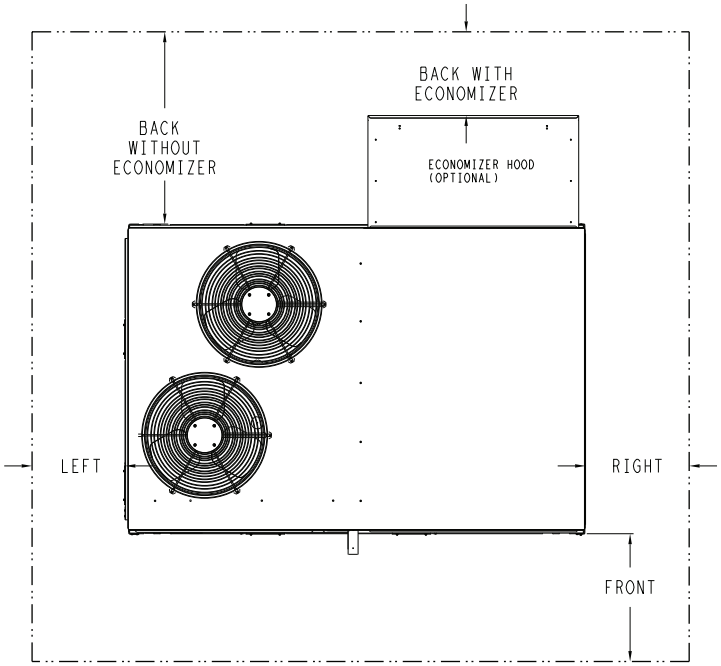


NOTE:

1. FOR ALL MINIMUM CLEARANCES LOCAL CODES OR JURISDICTIONS MAY PREVAIL.

| CLEARANCE | | | |
|---|---|---|---|
| | SERVICE WITH: | SERVICE WITH: | OPERATING |
| SURFACE | CONDUCTIVE BARRIER | NONCONDUCTIVE BARRIER | CLEARANCE |
| FRONT | 48 [1219mm] | 36 [914mm] | 18 [457mm] |
| LEFT | 48 [1219mm] | 42 [1067mm] | 18 [457mm] |
| BACK W/O ECON | 48 [1219mm] | 42 [1067mm] | 18 [457mm] |
| BACK W/ECON | 36 [914mm] | 36 [914mm] | 18 [457mm] |
| RIGHT | 36 [914mm] | 36 [914mm] | 18 [457mm] |
| TOP | 72 [1829mm] | 72 [1829mm] | 72 [1829mm] |

| ITC CLASSIFICATION | SHEET | DATE | SUPERCEDES | | | REV |
|---|---|---|---|---|---|---|
| U.S. ECCN:NSR | 2 OF 3 | 8/8/23 | - | 48FE 08-12 SINGLE ZONE ELECTRICAL COOLING WITH GAS HEAT | 48TM009320 | - |

Carrier
THIS DOCUMENT IS THE PROPERTY OF CARRIER CORPORATION AND IS DELIVERED UPON THE EXPRESS CONDITION THAT THE CONTENTS WILL NOT BE DISCLOSED OR USED WITHOUT CARRIER CORPORATION'S WRITTEN CONSENT.
SUBMISSION OF THESE DRAWINGS OR DOCUMENTS DOES NOT CONSTITUTE PART PERFORMANCE OR ACCEPTANCE OF CONTRACT.

**Fig. 2 — Unit Dimensional Drawing – Sizes 08, 09, 12 (cont)**

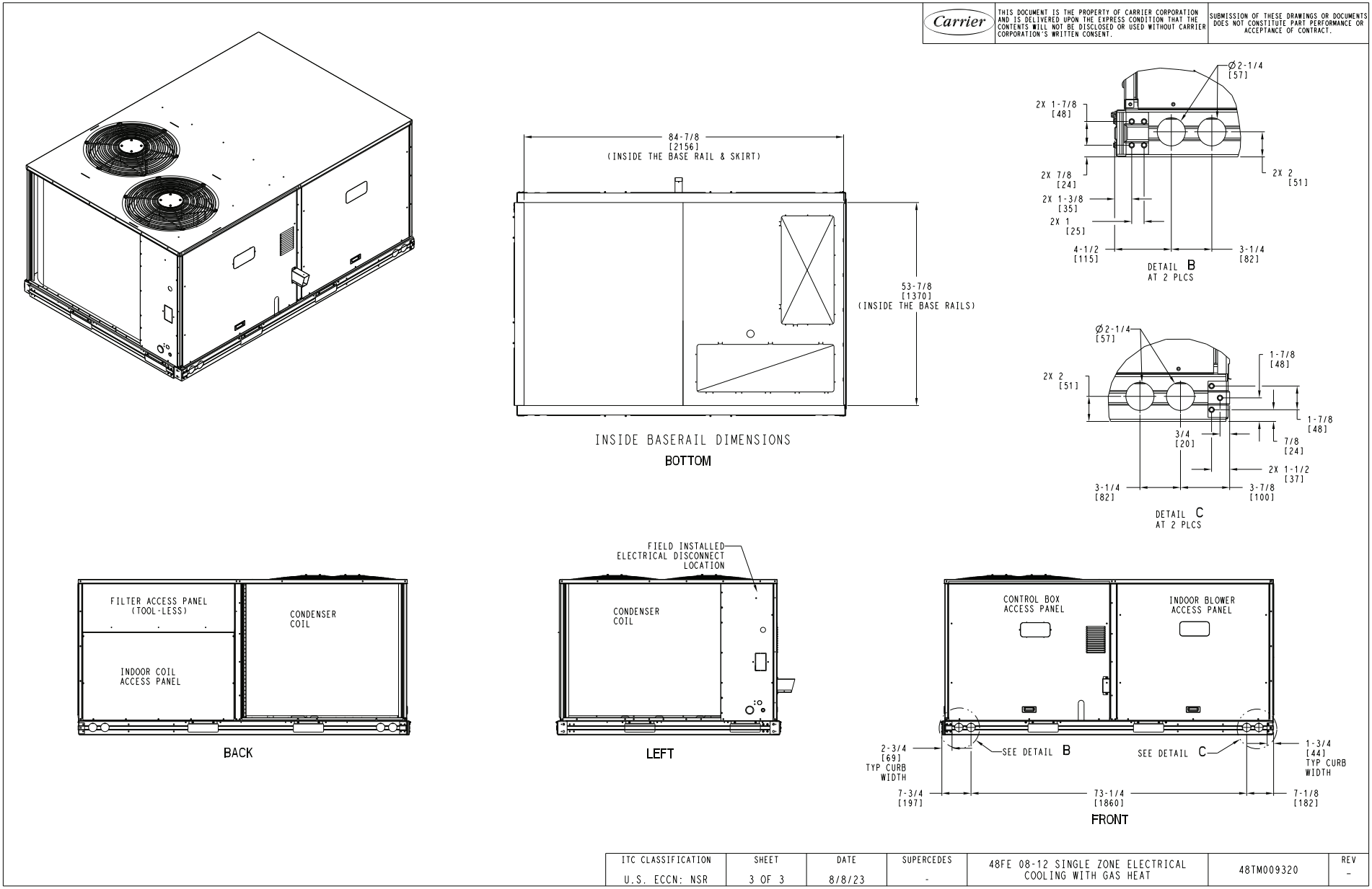


**Fig. 2 — Unit Dimensional Drawing – Sizes 08, 09, 12 (cont)**

# INSTALLATION

## Step 1 — Plan for Unit Location

Select a location for the unit and its support system (curb or other) that provides for the minimum clearances required for safety. This includes the clearance to combustible surfaces, unit performance and service access below, around and above unit as specified in unit drawings. See Fig. 2.

NOTE: Consider also the effect of adjacent units.

Be sure that unit is installed such that snow will not block the combustion intake or flue outlet.

Unit may be installed directly on wood flooring or on class A, B, or C roof-covering material when roof curb is used.

Do not install unit in an indoor location. Do not locate air inlets near exhaust vents or other sources of contaminated air. For proper unit operation, adequate combustion and ventilation air must be provided in accordance with Section 5.3 (Air for Combustion and Ventilation) of the National Fuel Gas Code, ANSI Z223.1 (American National Standards Institute) and NFPA (National Fire Protection Association) 54 TIA-54-84-1. In Canada, installation must be in accordance with the CAN1-B149 installation codes for gas burning appliances.

Although unit is weatherproof, avoid locations that permit water from higher level runoff and overhangs to fall onto the unit.

Locate mechanical draft system flue assembly at least 4 ft (1.2 m) from any opening through which combustion products could enter the building, and at least 4 ft (1.2 m) from any adjacent building (or per local code). Locate the flue assembly at least 10 ft (3.05 m) from an adjacent unit's fresh air intake hood if within 3 ft (0.91 m) of same elevation (or per local code). When unit is located adjacent to public walkways, flue assembly must be at least 7 ft (2.1 m) above grade.

Select a unit mounting system that provides adequate height to allow installation of condensate trap per requirements. See Install External Condensate Trap and Line on page 16 for required trap dimensions.

ROOF MOUNT

Check building codes for weight distribution requirements. Unit operating weight is shown in Table 2.

## Step 2 — Plan for Sequence of Unit Installation

The support method used for this unit will dictate different sequences for the steps of unit installation. For example, on curb-mounted units, some accessories must be installed on the unit before the unit is placed on the curb. Review the following for recommended sequences for installation steps.

CURB-MOUNTED INSTALLATION

1. Install curb
2. Install field-fabricated ductwork inside curb
3. Install accessory thru-base service connection package (affects curb and unit) (refer to accessory installation instructions for details)
4. Prepare bottom condensate drain connection to suit planned condensate line routing (see Install External Condensate Trap and Line on page 16 for details)
5. Rig and place unit
6. Install outdoor air hood
7. Install flue hood
8. Install gas piping
9. Install condensate line trap and piping
10. Make electrical connections
11. Install other accessories

PAD-MOUNTED INSTALLATION

1. Prepare pad and unit supports
2. Check and tighten the bottom condensate drain connection plug
3. Rig and place unit
4. Convert unit to side duct connection arrangement
5. Install field-fabricated ductwork at unit duct openings
6. Install outdoor air hood
7. Install flue hood
8. Install gas piping
9. Install condensate line trap and piping
10. Make electrical connections
11. Install other accessories

FRAME-MOUNTED INSTALLATION

Frame-mounted applications generally follow the sequence for a curb installation. Adapt as required to suit specific installation plan.

## Step 3 — Inspect Unit

Inspect unit for transportation damage. File any claim with transportation agency. Confirm before installation of unit that voltage, amperage and circuit protection requirements listed on unit data plate agree with power supply provided.

## Step 4 — Provide Unit Support

ROOF CURB MOUNT

Accessory roof curb details and dimensions are shown in Fig. 3. Assemble and install accessory roof curb in accordance with instructions shipped with the curb. Curb should be level. This is necessary for unit drain to function properly. Unit leveling tolerances are shown in Fig. 4. Refer to Accessory Roof Curb Installation Instructions for additional information as required.

NOTE: The gasketing of the unit to the roof curb is critical for a watertight seal. Install gasket supplied with the roof curb as shown in Fig. 3. Improperly applied gasket can also result in air leaks and poor unit performance.

Install insulation, cant strips, roofing felt, and counter flashing as shown. Ductwork must be attached to curb and not to the unit.

> IMPORTANT: If the unit has the factory-installed Thru-the-base option, make sure to complete installation of the option before placing the unit on the roof curb.
> See the following sections:
> **Factory-Option Thru-Base Gas Connections**
> see page 14
> **Factory-Option Thru-Base Electrical Connections**
> see page 19

The accessory thru-the-base power and gas connection package must be installed before the unit is set on the roof curb. If field-installed thru-the-roof curb gas connections are desired, use factory-supplied 1/2-in. pipe coupling and gas plate assembly to mount the thru-the-roof curb connection to the roof curb. Gas connections and power connections to the unit must be field installed after the unit is installed on the roof curb.

If electric and control wiring is to be routed through the basepan, attach the accessory thru-the-base service connections to the basepan in accordance with the accessory installation instructions.

| ROOF CURB ACCESSORY # | A |
|---|---|
| CRRFCURB003A01 | 14" [356] |
| CRRFCURB004A01 | 24" [610] |

NOTES:
1. ROOFCURB ACCESSORY IS SHIPPED DISASSEMBLED.
2. INSULATED PANELS: 25.4 [1"] THK. POLYURETHANE FOAM, 44.5 [1-3/4] # DENSITY.
3. DIMENSIONS IN [ ] ARE IN MILLIMETERS.
4. ROOFCURB: 18 GAGE STEEL.
5. ATTACH DUCTWORK TO CURB. (FLANGES OF DUCT REST ON CURB).
6. SERVICE CLEARANCE 4 FEET ON EACH SIDE.
7. DIRECTION OF AIR FLOW.
8. CONNECTOR PACKAGE CRBTMPWR002A01 IS FOR THRU-THE-CURB GAS TYPE PACKAGE CRBTMPWR004A01 IS FOR THRU-THE-BOTTOM TYPE GAS CONNECTIONS.

| CONNECTOR PKG. ACC. | GAS CONNECTION TYPE | GAS FITTING | POWER WIRING FITTING | CONTROL WIRING FITTING | ACCESSORY CONVENIENCE OUTLET WIRING CONNECTOR |
|---|---|---|---|---|---|
| CRBTMPWR002A01 | THRU THE CURB | 3/4" [19] NPT | 1 1/4" [31.7] NPT | 1/2" [12.7] NPT | 1/2" [12.7] NPT |
| CRBTMPWR004A01 | THRU THE BOTTOM | | | | |

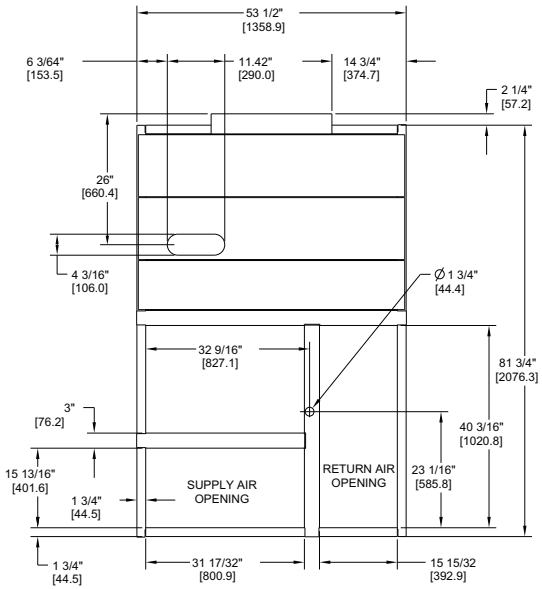


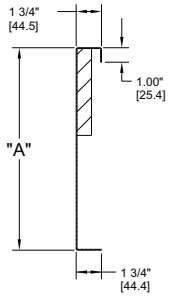


SECTION THRU SIDE

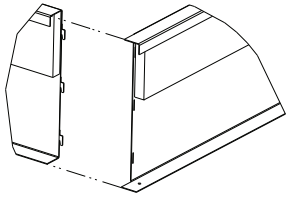

VIEW "B"
CORNER DETAIL

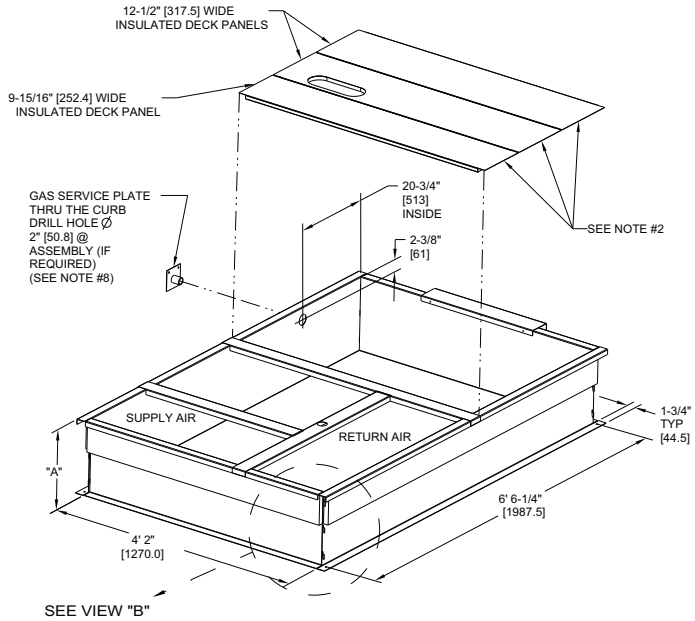


CERTIFIED DRAWING

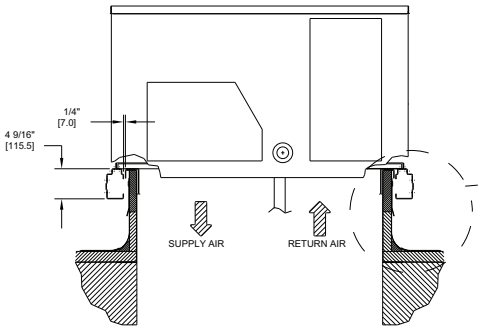


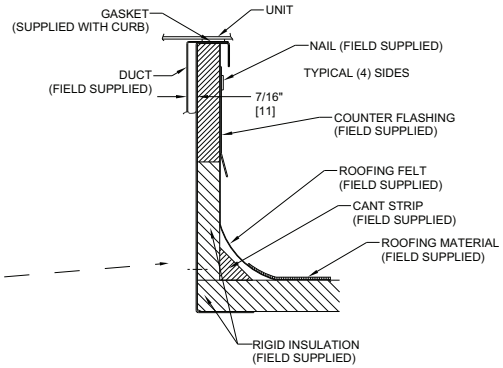


| REV | REVISION RECORD | DATE | BY | CHK'D | APP'D | ECN NO. |
|---|---|---|---|---|---|---|
| C | 6' 61/4" WAS 6' 7 1/6", 4'2' WAS 4' 2 13/16"; 18 GA WAS 16 GA.; 15 13/16" WAS 15 15/16"; NAIL FIELD SUPPLIED WAS WITH CURB | 4/22/13 | MMC | - | - | 1067898 |

DRAWING RELEASE LEVEL: PRODUCTION

THIRD ANGLE PROJECTION

UNLESS OTHERWISE SPECIFIED DIMENSIONS ARE IN INCHES TOLERANCES ON:
1 DEC ± - | 2 DEC ± - | 3 DEC ± - | ANG ± -

MATERIAL: - - -

AUTHORIZATION NUMBER: 1029120

ENGINEERING: - | MANUFACTURING: -

ENGINEERING REQUIREMENTS: T-005, Y-002

WEIGHT: -

DRAFTER: MMC 12/16/09 | CHECKER: -

SURFACE FINISH: - | MFG/PURCH: PURCH | MODEL (INTERNAL USE ONLY)

THIS DOCUMENT AND THE INFORMATION CONTAINED THEREIN IS PROPRIETARY TO CARRIER CORPORATION AND SHALL NOT BE USED OR DISCLOSED TO OTHERS, IN WHOLE OR IN PART, WITHOUT THE WRITTEN AUTHORIZATION OF CARRIER CORPORATION.

TITLE: CURB ASY, ROOF

SIZE: D | DRAWING NUMBER: 50HJ405012 SHEET 5 OF 5 | REV: C

NEXT DRAWING: - | SCALE: N/A | DISTRIBUTION: -

**Fig. 3 — 48FE**08-12 Roof Curb Details**

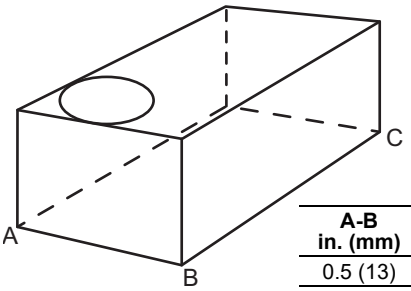


| A-B in. (mm) | B-C in. (mm) | A-C in. (mm) |
|---|---|---|
| 0.5 (13) | 1.0 (25) | 1.0 (25) |

**Fig. 4 — Unit Leveling Tolerances**

SLAB MOUNT (HORIZONTAL UNITS ONLY)

Provide a level concrete slab that extends a minimum of 6-in. (150 mm) beyond unit cabinet. Install a gravel apron in front of condenser coil air inlet to prevent grass and foliage from obstructing airflow.

NOTE: Horizontal units may be installed on a roof curb if required.

ALTERNATE UNIT SUPPORT (IN LIEU OF CURB OR SLAB MOUNT)

A non-combustible sleeper rail can be used in the unit curb support area. If sleeper rails cannot be used, support the long sides of the unit with a minimum of 3 equally spaced 4-in. x 4-in. (102 mm x 102 mm) pads on each side.

## Step 5 — Field Fabricate Ductwork

NOTE: Cabinet return-air static pressure (a negative condition) shall not exceed 0.35 in. wg (87 Pa) with economizer or 0.45 in. wg (112 Pa) without economizer.

For vertical ducted applications, secure all ducts to roof curb and building structure. *Do not connect ductwork to unit.*

Fabricate supply ductwork so that the cross sectional dimensions are equal to or greater than the unit supply duct opening dimensions for the first 18-in. (458 mm) of duct length from the unit basepan.

Insulate and weatherproof all external ductwork, joints, and roof openings with counter flashing and mastic in accordance with applicable codes.

Ducts passing through unconditioned spaces must be insulated and covered with a vapor barrier.

If a plenum return is used on a vertical unit, the return should be ducted through the roof deck to comply with applicable fire codes.

A minimum clearance is not required around ductwork.

**⚠ CAUTION**

PROPERTY DAMAGE HAZARD

Failure to follow this caution may result in damage to roofing materials.

Membrane roofs can be cut by sharp sheet metal edges. Be careful when placing any sheet metal parts on such roof.

## Step 6 — Rig and Place Unit

Keep unit upright and do not drop. Spreader bars are required for 08-12 size units. Rollers may be used to move unit across a roof. Level by using unit frame as a reference. See Table 2 and Fig. 5 for additional information.

Lifting holes are provided in base rails as shown in Fig. 5. Refer to rigging instructions on unit.

Rigging materials under unit (cardboard or wood to prevent base pan damage) must be removed PRIOR to placing the unit on the roof curb.

When using the standard side drain connection, ensure the red plug in the alternate bottom connection is tight. Do this before setting the unit in place. The red drain pan can be tightened with a 1/2-in. square socket drive extension. For further details see Install External Condensate Trap and Line on page 16.

Before setting the unit onto the curb, recheck gasketing on curb.

**⚠ CAUTION**

UNIT DAMAGE HAZARD

Failure to follow this caution may result in equipment damage.

All panels must be in place when rigging. Unit is not designed for handling by fork truck when packaging is removed.

If using top crate as spreader bar, once unit is set, carefully lower wooden crate off building roof top to ground. Ensure that no people or obstructions are below prior to lowering the crate.

**Table 2 — Operating Weights**

| 48FE | UNITS | | | | | |
|---|---|---|---|---|---|---|
| | 08 | | 09 | | 12 | |
| | lb | kg | lb | kg | lb | kg |
| **Base Unit** | 787 | 357 | 868 | 394 | 878 | 398 |
| **Economizer** | 75 | 34 | 75 | 34 | 75 | 34 |
| **Humidi-MiZer® System[a]** | 80 | 36 | 80 | 36 | 80 | 36 |
| **Powered Outlet[b]** | 36 | 16 | 36 | 16 | 36 | 16 |
| **Curb** | | | | | | |
| **14-in. (356 mm)** | 143 | 65 | 143 | 65 | 143 | 65 |
| **24-in. (610 mm)** | 245 | 111 | 245 | 111 | 245 | 111 |

NOTE(S):

a. Humidi-MiZer is not available on 48FE*M models.
b. Combined weight of Convenience Outlet and Transformer.

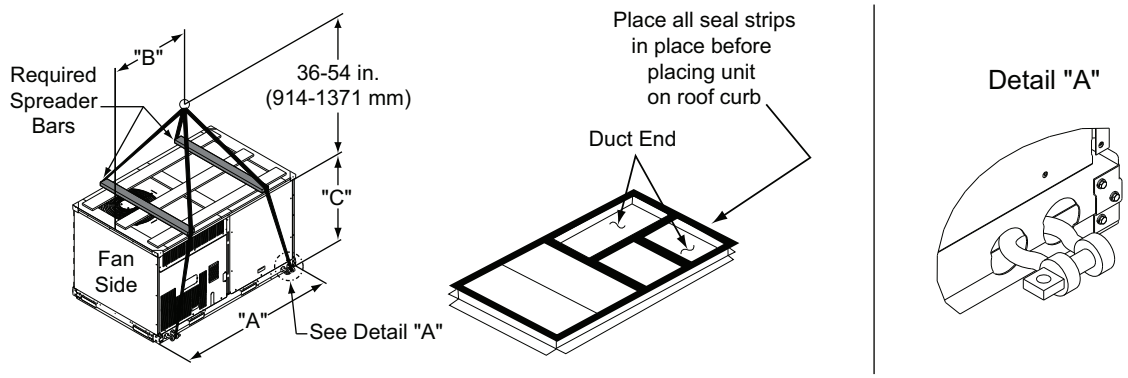


NOTE(S):
1. SPREADER BARS ARE REQUIRED. Top damage will occur if spreader bars are not used.
2. Hook rigging shackles through holes in base rail, as shown in Detail A. Holes in base rails are centered around the unit center of gravity. Use wooden top to prevent rigging straps from damaging unit.

| UNIT | MAX WEIGHT | | DIMENSIONS | | | | | |
|---|---|---|---|---|---|---|---|---|
| | | | A | | B | | C | |
| | lb | kg | in. | mm | in. | mm | in. | mm |
| **48FE**08** | 1264 | 573 | 88.0 | 2235 | 40.0 | 1015 | 41.5 | 1055 |
| **48FE**09** | 1395 | 633 | 88.0 | 2235 | 39.5 | 1005 | 49.5 | 1255 |
| **48FE**12** | 1415 | 642 | 88.0 | 2235 | 40.0 | 1015 | 49.5 | 1255 |

**Fig. 5 — Rigging Details**

POSITIONING ON CURB

Position unit on roof curb so that the following clearances are maintained: 1/4-in. (6.4 mm) clearance between the roof curb and the base rail inside the front and back, 0.0-in. clearance between the roof curb and the base rail inside on the duct end of the unit. This will result in the distance between the roof curb and the base rail inside on the condenser end of the unit being approximately 1/4-in. (6.4 mm).

Although unit is weatherproof, guard against water from higher level runoff and overhangs.

Flue vent discharge must have a minimum horizontal clearance of 4 ft (1220 mm) from electric and gas meters, gas regulators, and gas relief equipment. Minimum distance between unit and other electrically live parts is 48 inches (1220 mm).

Flue gas can deteriorate building materials. Orient unit such that flue gas will not affect building materials. Locate mechanical draft system flue assembly at least 48-in. (1220 mm) from an adjacent building or combustible material.

NOTE: Installation of accessory flue discharge deflector kit will reduce the minimum clearance to combustible material to 18-in. (460 mm).

After unit is in position, remove rigging skids and shipping materials.

IMPORTANT: If the unit has the factory-installed Thru-the-base option, make sure to complete installation of the option before placing the unit on the roof curb. See the following sections:
**Factory-Option Thru-Base Gas Connections**
see page 14
**Factory-Option Thru-Base Electrical Connections**
see page 19

## Step 7 — Convert to Horizontal and Connect Ductwork (When Required)

Unit is shipped in the vertical duct configuration. Unit without factory-installed economizer or return-air smoke detector option may be field-converted to horizontal ducted configuration. To convert to horizontal configuration, remove screws from side duct opening covers (see Fig. 6) and remove covers. Use the screws to install the covers on vertical duct openings with the insulation-side down. The panels must be inserted into the notches on the basepan to properly seal. The notches are covered by the tape used to secure the insulation to the basepan and are not easily seen. See Fig. 7 for position of the notches in the basepan. Seals around duct openings must be tight. Secure with screws as shown in Fig. 8. Cover seams with foil duct tape.

Field-supplied flanges should be attached to horizontal duct openings and all ductwork should be secured to the flanges. Insulate and weatherproof all external ductwork, joints, and roof or building openings with counter flashing and mastic in accordance with applicable codes.

Do not cover or obscure visibility to the unit's informative data plate when insulating horizontal ductwork.

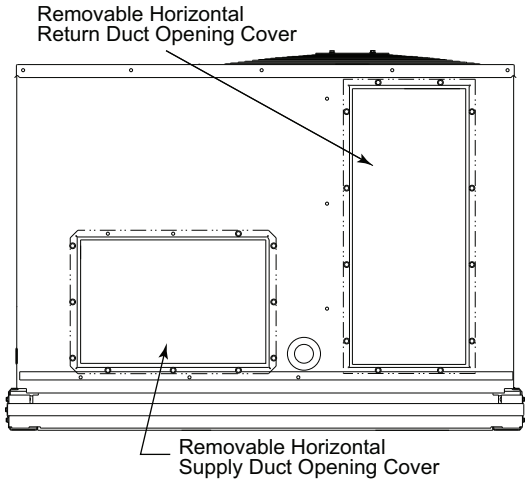


**Fig. 6 — Horizontal Conversion Panels**

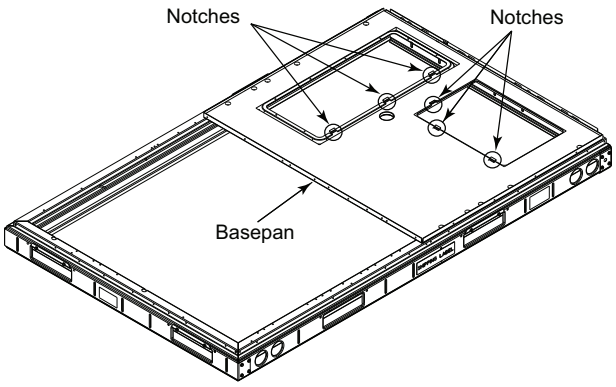


**Fig. 7 — Location of Notches**

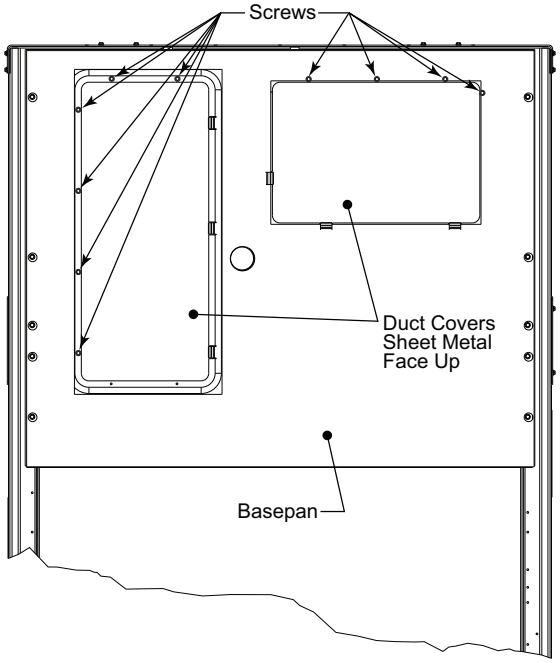


**Fig. 8 — Horizontal Duct Panels In Place**

Field-supplied flanges should be attached to horizontal duct openings and all ductwork should be secured to the flanges. Insulate and weatherproof all external ductwork, joints, and roof or building openings with counter flashing and mastic in accordance with applicable codes.

Do not cover or obscure visibility to the unit's informative data plate when insulating horizontal ductwork.

## Step 8 — Install Outside Air Hood

ECONOMIZER HOOD PACKAGE REMOVAL (FACTORY OPTION)

1. The hood is shipped in knock-down form and must be field assembled. The indoor coil access panel is used as the hood top while the hood sides, divider and filter are packaged together, attached to a metal support tray using plastic stretch wrap, and shipped in the return air compartment behind the indoor coil access panel. The hood assembly's metal tray is attached to the basepan and also attached to the damper using two plastic tie-wraps.
2. To gain access to the hood, remove the filter access panel. (See Fig. 9).
3. Locate the (2) screws holding the metal tray to the basepan and remove. Locate and cut the (2) plastic tie-wraps securing the assembly to the damper (see Fig. 10). Be careful to not damage any wiring or cut tie-wraps securing any wiring. The indoor coil access panel will be used as the top of the damper hood. Remove the screws along the sides and bottom of the indoor coil access panel.
4. Carefully lift the hood assembly (with metal tray) through the filter access opening and assemble per the steps outlined in Economizer Hood Setup in the following section.

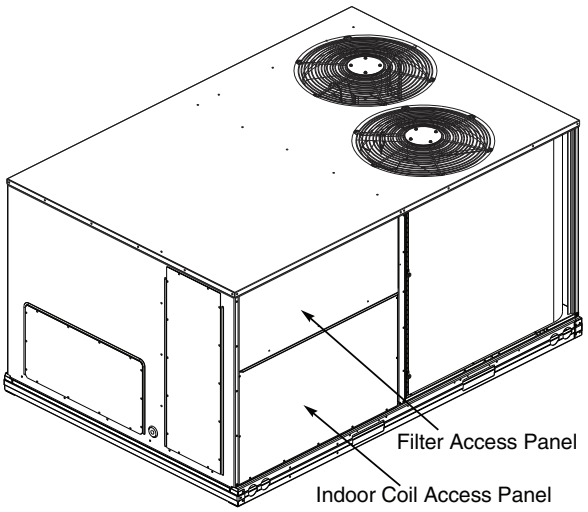


**Fig. 9 — Typical Access Panel Locations**

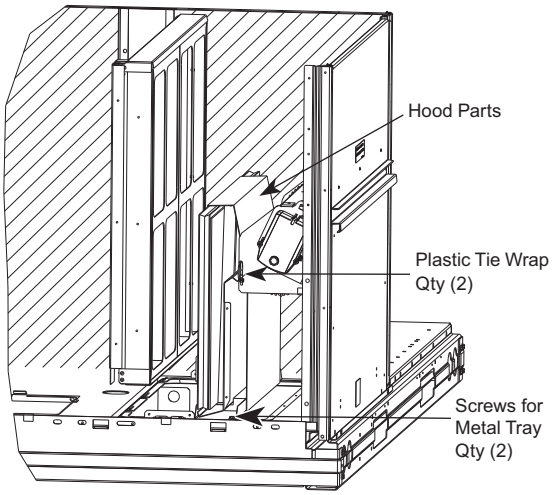


**Fig. 10 — Economizer Hood Package Location**

ECONOMIZER HOOD SETUP

NOTE: If the power exhaust accessory is to be installed on the unit, the hood shipped with the unit will not be used and must be discarded. Save the aluminum filter for use in the power exhaust hood assembly.

1. The indoor coil access panel will be used as the top of the hood. Remove the screws along the sides and bottom of the indoor coil access panel. See Fig. 11.
2. Swing out indoor coil access panel and insert the hood sides under the panel (hood top). Use the screws provided to attach the hood sides to the hood top. Use screws provided to attach the hood sides to the unit. See Fig. 12.
3. Remove the shipping tape holding the economizer barometric relief damper in place.
4. Insert the hood divider between the hood sides. See Fig. 12 and 13. Secure hood divider with 2 screws on each hood side. The hood divider is also used as the bottom filter rack for the aluminum filter.
5. Open the filter clips which are located underneath the hood top. Insert the aluminum filter into the bottom filter

rack (hood divider). Push the filter into position past the open filter clips. Close the filter clips to lock the filter into place. See Fig. 13.

6. Caulk the end of the joint between the unit top panel and the hood top.
7. Replace the filter access panel.

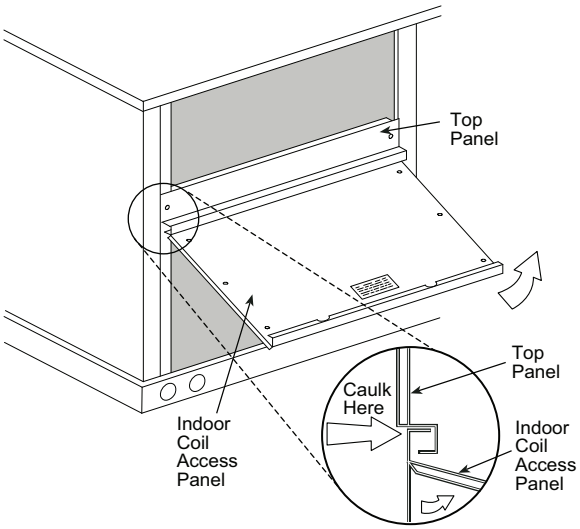


**Fig. 11 — Indoor Coil Access Panel Relocation**

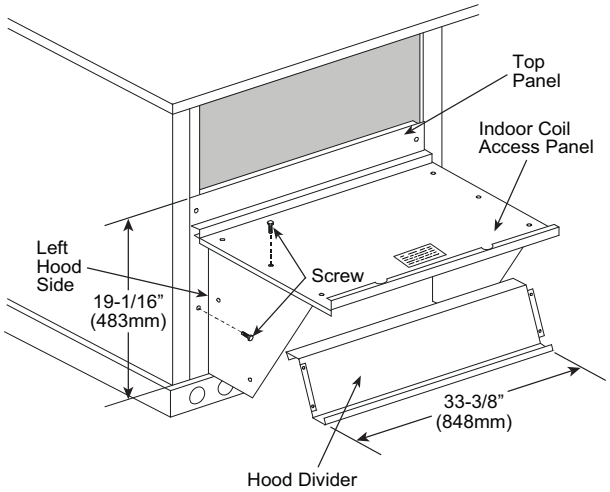


**Fig. 12 — Economizer Hood Construction**

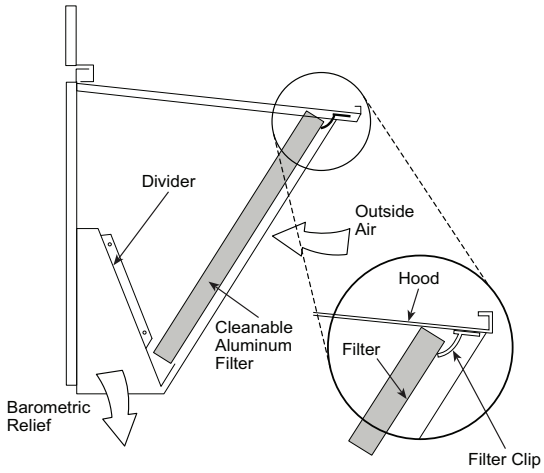


**Fig. 13 — Economizer Filter Installation**

## Step 9 — Install Flue Hood

Flue hood is shipped screwed to the basepan beside the burner compartment access panel. Remove from shipping location and using screws provided, install flue hood and screen in location shown in Fig. 14.

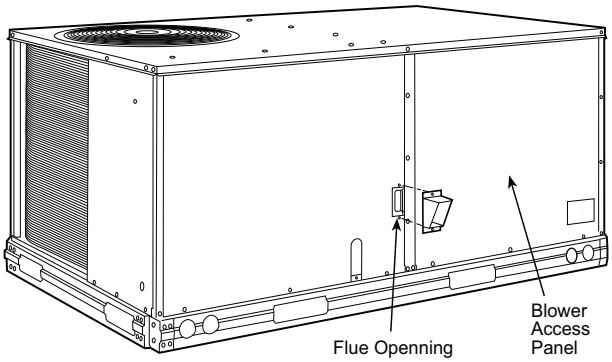


**Fig. 14 — Flue Hood Details**

## Step 10 — Install Gas Piping

Installation of the gas piping must be accordance with local building codes and with applicable national codes. In U.S.A., refer to NFPA 54/ANSI Z223.1 National Fuel Gas Code (NFGC). In Canada, installation must be in accordance with the CAN/CSA B149.1 and CAN/CSA B149.2 installation codes for gas-burning appliances. This unit is factory equipped for use with natural gas (NG) fuel at elevations up to 2000 ft (610 m) above sea level. Unit may be field converted for operation at elevations above 2000 ft (610 m) and/or for use with liquefied petroleum (LP) fuel. See accessory kit installation instructions regarding these accessories.

NOTE: Furnace gas input rate on rating plate is for installation up to 2000 ft (610 m) above sea level. The input rating for altitudes above 2000 ft (610 m) must be derated by 4% for each 1000 ft (305 m) above sea level.

NOTE: Installation of this furnace at altitudes above 2000 ft (610 m) shall be made in accordance with the Listed High Altitude Conversion Kit available with this furnace.

NOTE: L'installation de ce générateur de chaleur à des altitudes supérieures à 2000 pi (610 mm) doit être effectuée conformément aux instructions accompagnant la trousse de conversion pour haute altitude fournie avec cet appareil.

For natural gas applications, gas pressure at unit gas connection must not be less than 4 in. wg (996 Pa) or greater than 13 in. wg (3240 Pa) while the unit is operating (see Table 3). For liquefied petroleum applications, the gas pressure must not be less than 11 in. wg (2740 Pa) or greater than 13.0 in. wg (3240 Pa) at the unit connection (see Table 4).

**Table 3 — Natural Gas Supply Line Pressure Ranges**

| UNIT MODEL | UNIT SIZE | MIN. | MAX. |
|---|---|---|---|
| 48FED/E/F/S/R/T | 08, 09, 12 | 4.0 in. wg (996 Pa) | 13.0 in. wg (3240 Pa) |

**Table 4 — Liquid Propane Supply Line Pressure Ranges**

| UNIT MODEL | UNIT SIZE | MIN. | MAX. |
|---|---|---|---|
| 48FED/E/F/S/R/T | 08, 09, 12 | 11.0 in. wg (2740 Pa) | 13.0 in. wg (3240 Pa) |

The gas supply pipe enters the unit at the burner access panel on the front side of the unit through the long slot at the bottom of the access panel. The gas connection to the unit is made to the 1/2-in. FPT gas inlet port on the unit gas valve (see Table 5).

Manifold pressure is factory-adjusted for NG fuel use. Adjust as required to obtain best flame characteristics.

### Table 5 — Natural Gas Manifold Pressure Ranges

| UNIT MODEL | UNIT SIZE | HIGH FIRE | LOW FIRE[a] |
|---|---|---|---|
| **48FED/E/F/S/R/T** | 08, 09, 12 | 3.5 in. wg (872 Pa) | 2.0 in. wg (498 Pa) |

NOTE(S):

a. LOW FIRE, 1.7 in. wg (423 Pa), applies to the following units only: 48FED*08 and 48FED*09.

Manifold pressure for LP fuel use must be adjusted to specified range (see Table 6). Follow instructions in the accessory kit to make initial readjustment.

### Table 6 — Liquid Propane Manifold Pressure Ranges

| UNIT MODEL | UNIT SIZE | HIGH FIRE | LOW FIRE[a] |
|---|---|---|---|
| **48FED/E/F/S/R/T** | 08, 09, 12 | 10.0 in. wg (2490 Pa) | 5.7 in. wg (1420 Pa) |

NOTE(S):

a. LOW FIRE, 5.0 in. wg (1420 Pa), applies to the following units only: 48FED*08 and 48FED*09.

**⚠ CAUTION**

EQUIPMENT DAMAGE

Failure to follow this caution may result in equipment damage.

When connecting the gas line to the unit gas valve, the installer MUST use a backup wrench to prevent damage to the valve.

Install a gas supply line that runs to the unit heating section. Refer to the NFPA 54/NFGC or equivalent code for gas pipe sizing data. Do not use a pipe size smaller than 1/2-inch. Size the gas supply line to allow for a maximum pressure drop of 0.5 in. wg (124 Pa) between gas regulator source and unit gas valve connection when unit is operating at high-fire flow rate.

The gas supply line can approach the unit in three ways: horizontally from outside the unit (across the roof), thru-curb/under unit basepan (accessory kit required) or through unit basepan (factory-option or accessory kit required). Consult accessory kit installation instructions for details on these installation methods. Observe clearance to gas line components per Fig. 15.

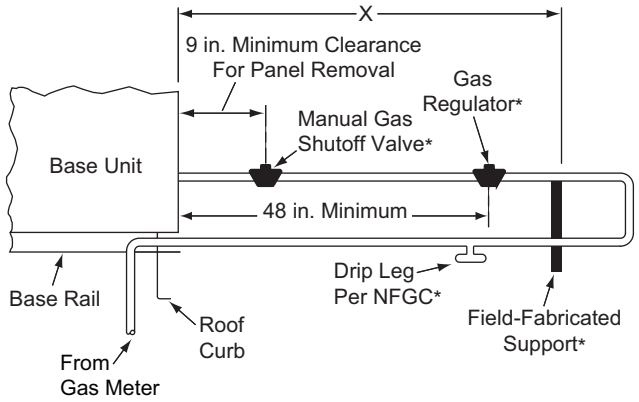


LEGEND
**NFGC** — National Fuel Gas Code

NOTE: Follow all local codes.
*Field-installed.

| STEEL PIPE NOMINAL DIAMETER (in.) | SPACING OF SUPPORTS X DIMENSION (ft) |
|---|---|
| **1/2** | 6 |
| **3/4 or 1** | 8 |
| **1-1/4 or larger** | 10 |

**Fig. 15 — Gas Piping Guide (with Accessory Thru-the-Curb Service Connections)**

FACTORY OPTION THRU-BASE GAS CONNECTIONS

This service connection kit consists of a 1/2-in. NPT gas adapter fitting (brass), a 1/2-in. electrical bulkhead connector and a 3/4-in. electrical bulkhead connector, all factory-installed in the embossed (raised) section of the unit basepan in the condenser section. See Fig. 16.

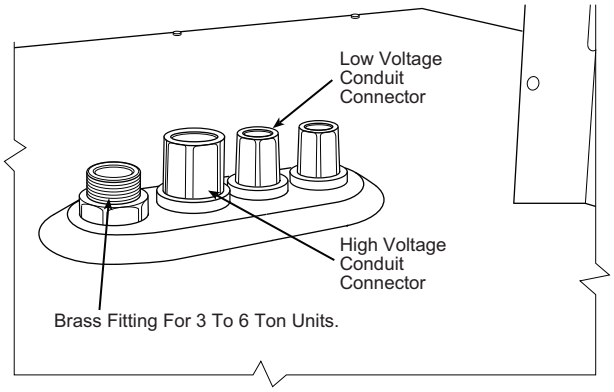


**Fig. 16 — Thru-Base Connection Fittings**

The thru-base gas connector has male and female threads. The male threads protrude above the basepan of the unit; the female threads protrude below the basepan.

Check tightness of connector lock nuts before connecting gas piping.

Install a 1/2-in. NPT street elbow on the thru-base gas fitting. Attach a 1/2-in. pipe nipple with minimum length of 16-in. (406 mm) (field-supplied) to the street elbow and extend it through the access panel at the gas support bracket. See Fig. 17.

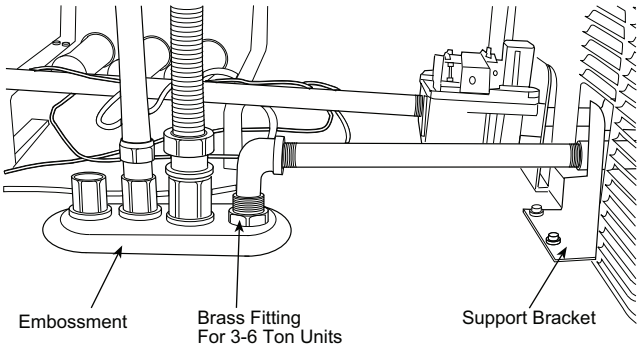


**Fig. 17 — Gas Line Piping**

Other hardware required to complete the installation of the gas supply line will include a manual shutoff valve, a sediment trap (drip leg), and a ground-joint union. A pressure regulator valve may also be required (to convert gas pressure from pounds to inches of pressure). The manual shutoff valve must be located within 6 ft (1.83 m) of the unit. The union, located in the final leg entering the unit, must be located at least 9-in. (230 mm) away from the access panel to permit the panel to be removed for service. If a regulator valve is installed, it must be located a minimum of 4 ft (1220 mm) away from the unit's flue outlet. Some municipal codes require that the manual shutoff valve be located upstream of the sediment trap. See Fig. 18 and 19 for typical piping arrangements for gas piping that has been routed through the sidewall of the curb. See Fig. 20 for typical piping arrangement when thru-base is used. Ensure that all piping does not block access to the unit's main control box or limit the required working space in front of the control box.

When installing the gas supply line, observe local codes pertaining to gas pipe installations. Refer to the NFPA 54/ANSI Z223.1 NFGC latest edition (in Canada, CAN/CSA B149.1). In the

absence of local building codes, adhere to the following pertinent recommendations:

1. Avoid low spots in long runs of pipe. Grade all pipe 1/4-in. in every 15 ft (7 mm in every 5 m) to prevent traps. Grade all horizontal runs downward to risers. Use risers to connect to heating section and to meter.
2. Protect all segments of piping system against physical and thermal damage. Support all piping with appropriate straps, hangers, etc. Use a minimum of one hanger every 6 ft (1.8 m). For pipe sizes larger than 1/2-in., follow recommendations of national codes.

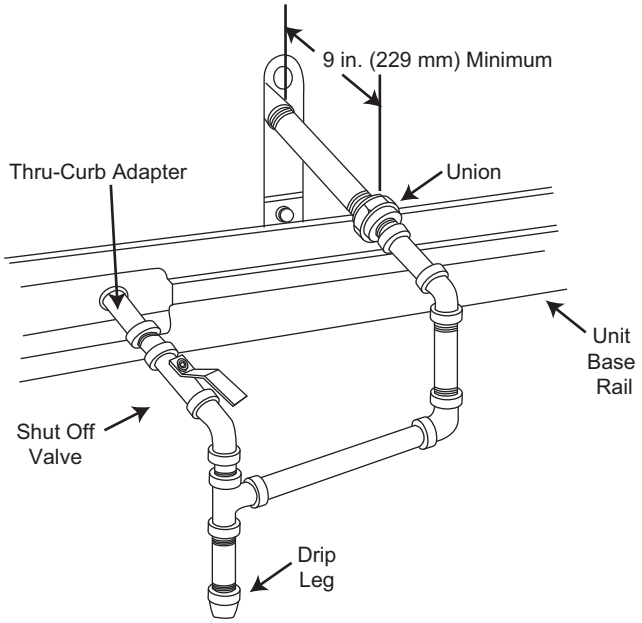


**Fig. 18 — Gas Piping, Typical Curb Sidewall Piping (Example 1)**

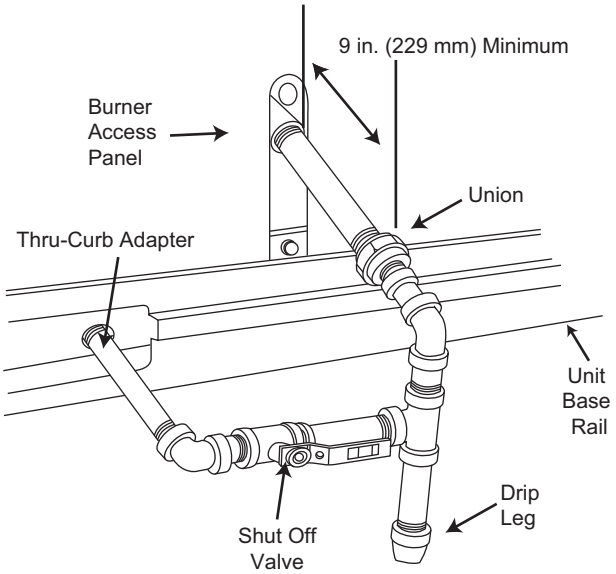


**Fig. 19 — Gas Piping, Typical Curb Sidewall Piping (Example 2)**

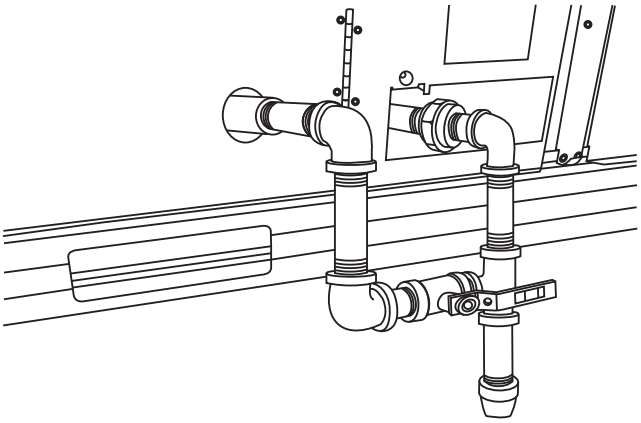

**Fig. 20 — Gas Piping Thru-Base Connections**

3. Apply joint compound (pipe dope) sparingly and only to male threads of joint when making pipe connections. Use only pipe dope that is resistant to action of liquefied petroleum gases as specified by local and/or national codes. If using PTFE (Teflon®[1]) tape, ensure the material is Double Density type and is labeled for use on gas lines. Apply tape per manufacturer's instructions.
4. Pressure-test all gas piping in accordance with local and national plumbing and gas codes before connecting piping to unit.

NOTE: Pressure test the gas supply system after the gas supply piping is connected to the gas valve. The supply piping must be disconnected from the gas valve during the testing of the piping systems when test pressure is in excess of 0.5 psig (3450 Pa). Pressure test the gas supply piping system at pressures equal to or less than 0.5 psig (3450 Pa). The unit heating section must be isolated from the gas piping system by closing the external main manual shutoff valve and slightly opening the ground-joint union.

Check for gas leaks at the field-installed and factory-installed gas lines after all piping connections have been completed. Use soap-and-water solution (or method specified by local codes and/or regulations).

**⚠WARNING**

Failure to follow this warning could result in personal injury, death and/or property damage.

- Connect gas pipe to unit using a backup wrench to avoid damaging gas controls.
- Never purge a gas line into a combustion chamber.
- Never test for gas leaks with an open flame. Use a commercially available soap solution made specifically for the detection of leaks to check all connections.
- Use proper length of pipe to avoid stress on gas control manifold.

NOTE: If orifice hole appears damaged or it is suspected to have been re-drilled, check orifice hole with a numbered drill bit of correct size. Never re-drill an orifice (see Fig. 21). A burr-free and squarely aligned orifice hole is essential for proper flame characteristics.

1. Third-party trademarks and logos are the property of their respective owners.

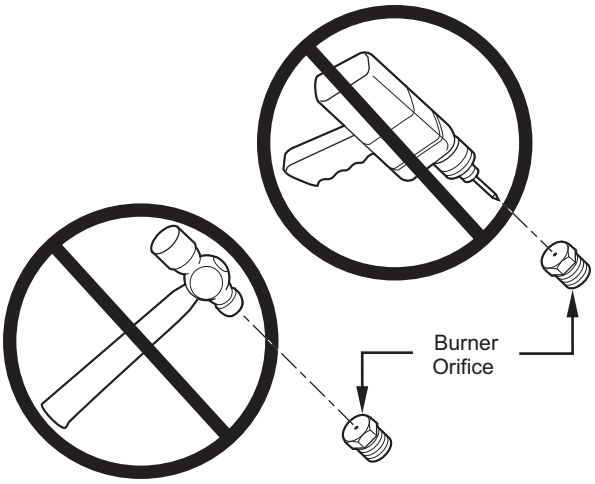


**Fig. 21 — Orifice Hole**

## Step 11 — Install External Condensate Trap and Line

The unit has one 3/4-in. condensate drain connection on the end of the condensate pan and an alternate connection on the bottom. See Fig. 22. Unit airflow configuration does not determine which drain connection to use. Either drain connection can be used with vertical or horizontal applications.

To use the alternate bottom drain connection, remove the red drain plug from the bottom connection (use a 1/2-in. square socket drive extension) and install it in the side drain connection.

The piping for the condensate drain and external trap can be completed after the unit is in place. See Fig. 22 and 23.

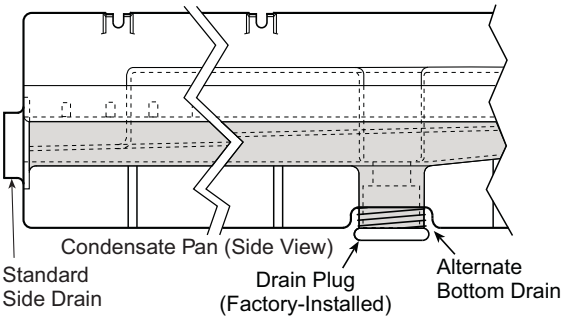


**Fig. 22 — Condensate Drain Pan (Side View)**

NOTE: If the alternate bottom drain is not used, check the drain plug for tightness prior to setting the unit on the roof curb.

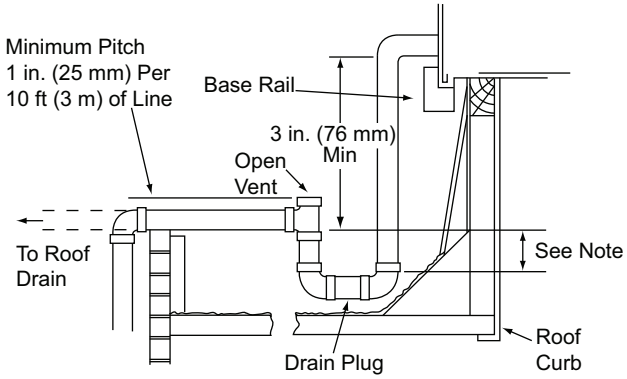


NOTE: Trap should be deep enough to offset maximum unit static difference. A 4 in. (102 mm) trap is recommended.

**Fig. 23 — Condensate Drain Piping Details**

All units must have an external trap for condensate drainage. Install a trap at least 4-in. (102 mm) deep and protect against freeze-up. If drain line is installed downstream from the external trap, pitch the line away from the unit at 1-in. per 10 ft (25 mm in 3 m) of run. Do not use a pipe size smaller than the unit connection (3/4-in.).

## Step 12 — Make Electrical Connections

**⚠WARNING**

Failure to follow this warning could result in personal injury or death.

Do not use gas piping as an electrical ground.

Unit cabinet must have an uninterrupted, unbroken electrical ground to minimize the possibility of personal injury if an electrical fault should occur. This ground may consist of electrical wire connected to unit ground lug in control compartment, or conduit approved for electrical ground when installed in accordance with NEC (National Electrical Code); ANSI/NFPA 70, latest edition (in Canada, Canadian Electrical Code CSA [Canadian Standards Association] C22.1), and local electrical codes.

NOTE: Field-supplied wiring shall conform with the limitations of minimum 63°F (33°C) rise.

FIELD POWER SUPPLY

If equipped with optional powered convenience outlet: The power source leads to the convenience outlet's transformer primary are not factory connected. Installer must connect these leads according to required operation of the convenience outlet. If an always-energized convenience outlet operation is desired, connect the source leads to the line side of the unit-mounted disconnect. (Check with local codes to ensure this method is acceptable in your area.) If a de-energize via unit disconnect switch operation of the convenience outlet is desired, connect the source leads to the load side of the unit disconnect. On a unit without a unit-mounted disconnect, connect the source leads to compressor contactor C and indoor fan contactor IFC pressure lugs with unit field power leads (see Fig. 24).

FIELD POWER WIRING CONNECTION

Field power wires are connected to the unit at line-side pressure lugs on compressor contactor C and indoor fan contactor IFC (see wiring diagram label for control box component arrangement) or at factory-installed option non-fused disconnect switch. Max wire size is #4 AWG (copper only).

Refer to Table 7 for maximum wire size at connection lugs. Use copper wire only. See Fig. 24 and 25.

**Table 7 — Connection Lug Min/Max Wire Sizes**

| CONNECTION | MINIMUM | MAXIMUM |
|---|---|---|
| TB1 In Unit Control Box | #14 | #1 |
| 80A Disconnect Option | #14 | #4 |
| 100A Disconnect Option | #8 | 1/0 |

NOTE: TEST LEADS - Unit may be equipped with short leads (pigtails) on the field line connection points on contactor C or optional disconnect switch, see Fig. 24. These leads are for factory run-test purposes only; remove and discard before connecting field power wires to unit connection points. Make field power connections directly to line connection pressure lugs only.

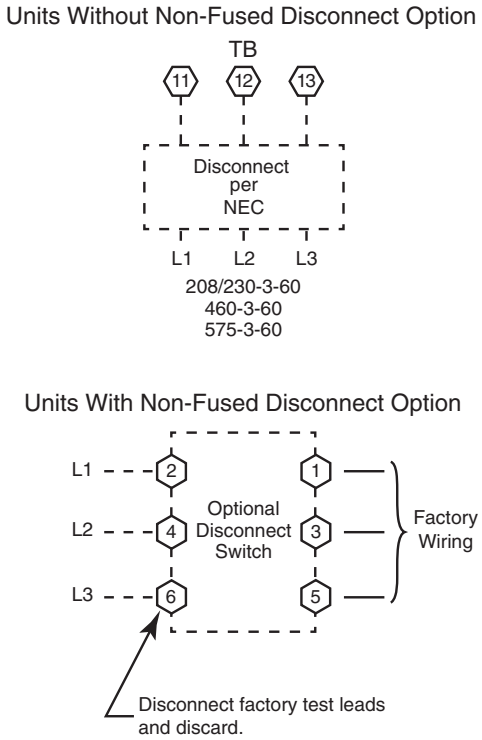


**Fig. 24 — Power Wiring Connections**

**⚠ WARNING**

FIRE HAZARD

Failure to follow this warning could result in personal injury, death, or property damage.

Do not connect aluminum wire between disconnect switch and unit. Use only copper wire.

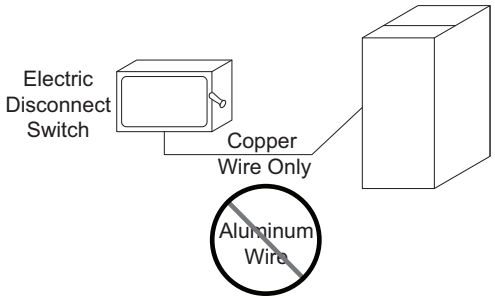


**Fig. 25 — Disconnect Switch and Unit**

UNITS WITH FACTORY-INSTALLED NON-FUSED DISCONNECT

The factory-installed optional non-fused disconnect (NFD) switch is located in a weatherproof enclosure located under the main control box. The manual switch handle and shaft are shipped in the disconnect enclosure. Assemble the shaft and handle to the switch at this point. Discard the factory test leads (see Fig. 26).

Connect field power supply conductors to LINE side terminals when the switch enclosure cover is removed to attach the handle.

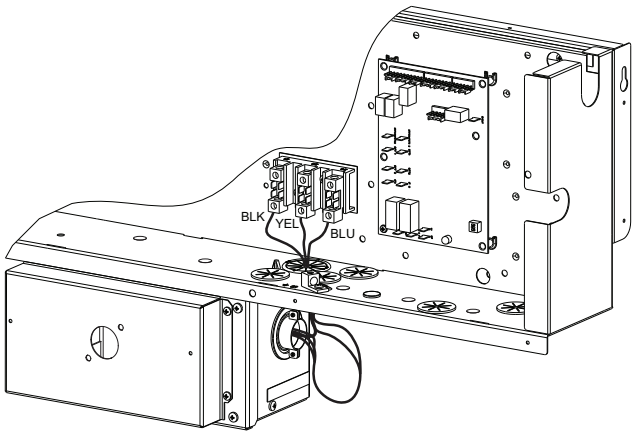


**Fig. 26 — Location of Non-Fused Disconnect Enclosure**

***To field install the NFD shaft and handle (see Fig. 27):***

1. Remove the unit front panel (see Fig. 2).
2. Remove (3) hex screws on the NFD enclosure - (2) on the face of the cover and (1) on the left side cover.
3. Remove the front cover of the NFD enclosure.
4. Make sure the NFD shipped from the factory is at OFF position (the arrow on the black handle knob is at OFF).
5. Insert the shaft with the cross pin on the top of the shaft in the horizontal position.
6. Measure from the tip of the shaft to the top surface of the black pointer; the measurement should be 3.75-in. to 3.88-in. (95mm to 99mm).
7. Tighten the locking screw to secure the shaft to the NFD.
8. Turn the handle to the OFF position with red arrow pointing to OFF.
9. Install the handle on to the painted cover horizontally with the red arrow pointing to the left.
10. Secure the handle to the painted cover with (2) screws and lock washers supplied.
11. Engaging the shaft into the handle socket, re-install (3) hex screws on the NFD enclosure.
12. Re-install the unit front panel.

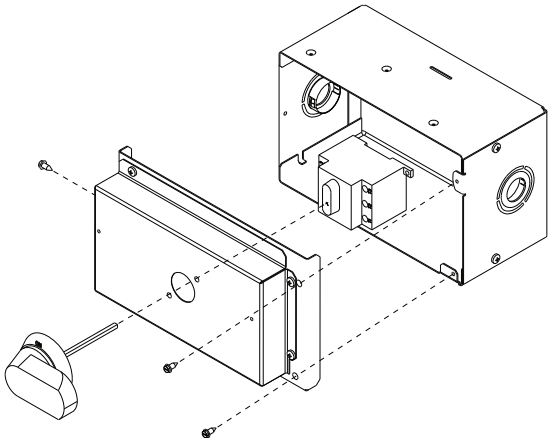

**Fig. 27 — Handle and Shaft Assembly for NFD**

UNITS WITHOUT FACTORY-INSTALLED NON-FUSED DISCONNECT

When installing units, provide a disconnect switch per NEC (National Electrical Code) of adequate size. Disconnect sizing data is provided on the unit informative plate. Locate on unit cabinet or within sight of the unit per national or local codes. Do not cover unit informative plate if mounting the disconnect on the unit cabinet.

FIELD WIRING COMPLIANCE

Field wiring must comply with NEC and all local codes. Size wire based on MCA (Minimum Circuit Amps) on the unit informative plate. See Fig. 24 and the unit label diagram for power wiring connections to the unit power terminal blocks and equipment ground. Maximum wire size is #2 ga AWG per pole.

Provide a ground-fault and short-circuit over-current protection device (fuse or breaker) per NEC Article 440 (or local codes). Refer to unit informative data plate for MOCP (Maximum Overcurrent Protection) device size.

All units except 208/230-v units are factory wired for the voltage shown on the nameplate. If the 208/230-v unit is to be connected to a 208-v power supply, the control transformer must be rewired by moving the black wire with the 1/4-in. female spade connector from the 230-v connection and moving it to the 200-v 1/4-in. male terminal on the primary side of the transformer. Refer to unit label diagram for additional information.

Voltage to compressor terminals during operation must be within voltage range indicated on unit nameplate. On 3-phase units, voltages between phases must be balanced within 2% and the current within 10%. Use the following formula to determine the percent of voltage imbalance. Operation on improper line voltage or excessive phase imbalance constitutes abuse and may cause damage to electrical components. Such operation would invalidate any applicable Carrier warranty.

$$\text{\% Voltage Imbalance} = 100 \times \frac{\text{max voltage deviation from average voltage}}{\text{average voltage}}$$

Example: Supply voltage is 230-3-60

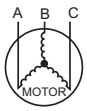


AB = 224-v
BC = 231-v
AC = 226-v

$$\text{Average Voltage} = \frac{(224 + 231 + 226)}{3} = \frac{681}{3} = 227$$

Determine maximum deviation from average voltage.

(AB) 227-224 = 3-v

(BC) 231-227 = 4-v

(AC) 227-226 = 1-v

Maximum deviation is 4-v.

Determine percent of voltage imbalance.

$$\text{\% Voltage Imbalance} = 100\text{x} \frac{4}{227} = 1.76\%$$

This amount of phase imbalance is satisfactory as it is below the maximum allowable 2%.

IMPORTANT: If the supply voltage phase imbalance is more than 2%, contact your local electric utility company immediately.

CONVENIENCE OUTLETS

**⚠ WARNING**

ELECTRICAL OPERATION HAZARD

Failure to follow this warning could result in personal injury or death.

Units with convenience outlet circuits may use multiple disconnects. Check convenience outlet for power status before opening unit for service. Locate its disconnect switch, if appropriate, and open it. Lock-out and tag-out this switch, if necessary.

Two types of convenience outlets are offered on 48FE models: non-powered and unit-powered. Both types provide a 125-v GFCI (ground-fault circuit-interrupter) duplex receptacle rated at 15-A behind a hinged waterproof access cover, located on the end panel of the unit. See Fig. 28.

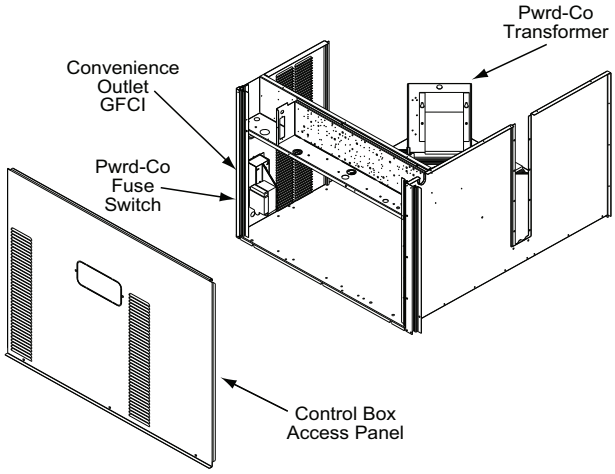


**Fig. 28 — Convenience Outlet Location Installing Weatherproof Cover**

A weatherproof cover is now required by UL standards for the factory-installed convenience outlets. This cover cannot be factory-mounted due to its depth; it must be installed at unit installation. For shipment, the convenience outlet is covered with a blank cover plate.

On units with electro-mechanical controls the weatherproof cover kit is shipped in the unit's control box. The kit includes the hinged cover, a backing plate and gasket. On units with a factory-installed direct digital controller (SystemVu™), the weatherproof cover kit is secured to the basepan underneath the control box.

***Disconnect All Power To Unit and Convenience Outlet. Lock-Out and Tag-Out All Power***

Remove the blank cover plate at the convenience outlet; discard the blank cover.

Loosen the two screws at the GFCI duplex outlet, until approximately 1/2-in. (13 mm) under screw heads is exposed. Press the gasket over the screw heads. Slip the backing plate over the screw heads at the keyhole slots and align with the gasket; tighten the two screws until snug (do not over-tighten).

Mount the weatherproof cover to the backing plate as shown in Fig. 29. Remove two slot fillers in the bottom of the cover to permit service tool cords to exit the cover. Check for full closing and latching.

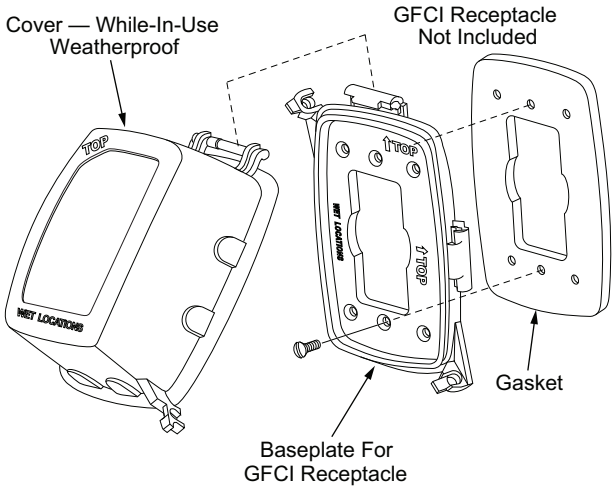


**Fig. 29 — Weatherproof Cover Installation**

***Non-powered type***

Requires the field installation of a general-purpose 125-v 15-A circuit powered from a source elsewhere in the building. Observe national and local codes when selecting wire size, fuse or breaker requirements and disconnect switch size and location. Route 125-v power supply conductors into the bottom of the utility box containing the duplex receptacle.

***Unit-powered type***

A unit-mounted transformer is factory-installed to step-down the main power supply voltage to the unit to 115-v at the duplex receptacle. This option also includes a manual switch with fuse, located in a utility box and mounted on a bracket behind the convenience outlet; access is through the unit's control box access panel. See Fig. 28.

The primary leads to the convenience outlet transformer are not factory-connected. Selection of primary power source is a customer option. If local codes permit, the transformer primary leads can be connected at the line-side terminals on the unit-mounted non-fused disconnect; this will provide service power to the unit when the unit disconnect witch is open. Other connection methods will result in the convenience outlet circuit being de-energized when the unit disconnect switch is open. See Fig. 30. On a unit without a unit-mounted disconnect, connect the source leads to the main terminal block (TB1).

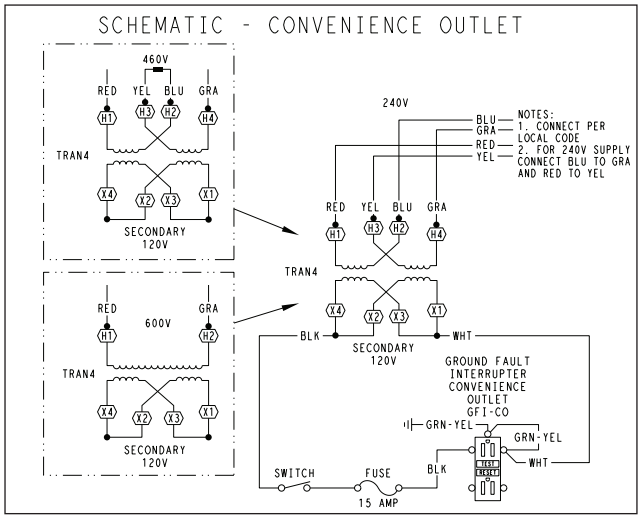


| UNIT VOLTAGE | CONNECT AS | PRIMARY CONNECTIONS | TRANSFORMER TERMINALS |
|---|---|---|---|
| **208, 230** | 240 | L1: RED+YEL<br>L2: BLU+YEL | H1+H3<br>H2+H4 |
| **460** | 480 | L1: RED<br>Splice BLU+YEL<br>L2: GRA | H1<br>H2+H3<br>H4 |
| **575** | 600 | L1: RED<br>L2: GRA | H1<br>H2 |

**Fig. 30 — Powered Convenience Outlet Wiring**

ALL UNITS

Test the GFCI receptacle by pressing the TEST button on the face of the receptacle to trip and open the receptacle. Check for proper grounding wires and power line phasing if the GFCI receptacle does not trip as required. Press the RESET button to clear the tripped condition.

***Unit-mounted convenience outlets***

Outlets will often require that two disconnects be opened to de-energize all power to the unit. Treat all units as electrically energized until the convenience outlet power is also checked and de-energization is confirmed. Observe National Electrical Code Article 210, Branch Circuits, for use of convenience outlets.

***Fuse on power type***

The factory fuse is a Bussman "Fusetron" T-15, non-renewable screw-in (Edison base) type plug fuse. See Fig. 31 for maximum continuous use amp limitations.

**NOTICE**

**Convenience Outlet Utilization**

**Maximum Continuous use: 15 Amps for receptacle outlets, and 8 Amps for factory supplied transformers**

50HJ542739 C

**Fig. 31 — Convenience Outlet Utilization Notice Label**

FACTORY-OPTION THRU-BASE CONNECTIONS (ELECTRICAL CONNECTIONS)

This service connection kit consists of a 1/2-in. NPT gas adapter fitting (brass), a 1/2 in. electrical bulkhead connector and a 3/4-in. electrical bulkhead connector, all factory-installed in the embossed (raised) section of the unit basepan in the condenser section. The 3/4 in. bulkhead connector enables the low-voltage control wires to pass through the basepan. The 1/2 in. electrical bulkhead connector allows the high-voltage power wires to pass through the basepan. See Fig. 16.

Check tightness of connector lock nuts before connecting electrical conduits.

Field-supplied and field-installed liquid tight conduit connectors and conduit may be attached to the connectors on the basepan. Pull correctly rated high voltage through appropriate conduits. Connect the power conduit to the internal disconnect (if unit is so equipped) or to the external disconnect (through unit side panel). A hole must be field cut in the main control box bottom on the left side so the 24-v control connections can be made. Connect the control power conduit to the unit control box at this hole.

***Units Without Thru- Base Connections***

1. Install power wiring conduit through side panel openings. Install conduit between disconnect and control box.
2. Install power lines to terminal connections as shown in Fig. 30.

Voltage to compressor terminals during operation must be within voltage range indicated on unit nameplate. On 3-phase units, voltages between phases must be balanced within 2% and the current within 10%. Use the formula on page 18 to determine the percent of voltage imbalance. Operation on improper line voltage or excessive phase imbalance constitutes abuse and may cause damage to electrical components. Such operation would invalidate any applicable Carrier warranty.

***Field Control Wiring***

The 48FE unit requires an external temperature control device. This device can be a thermostat (field-supplied) or a SystemVu™ controller (available as factory-installed option, for use on a Carrier Comfort Network® or as a stand-alone control). All field added wire must comply with UL and local NEC standards. See "Unit Without Thru-Base Connection Kit" on page 20 and use routing path shown in Fig. 32 to help with compliance as needed.

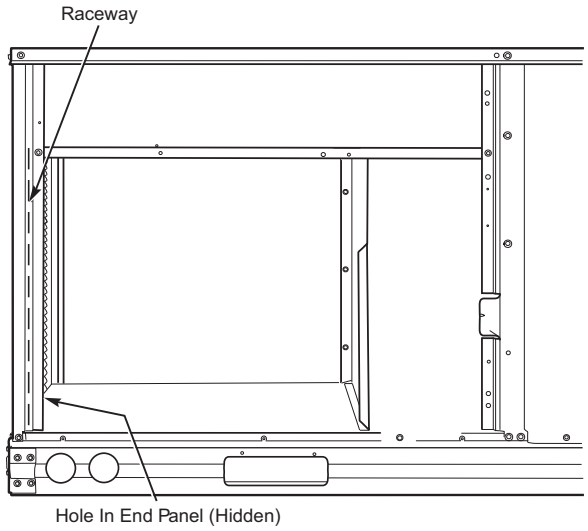


**Fig. 32 — Field Control Wiring Raceway**

***Thermostat***

Install a Carrier-approved accessory 2-stage thermostat according to installation instructions included with the accessory. For complete economizer function and 2-stage compressor operation, select a two-stage cooling thermostat. If a 2-stage cooling thermostat is not available, use a single stage cooling thermostat instead, but note that this will limit cooling to just 1 stage. Locate the thermostat accessory on a solid wall in the conditioned space to sense average temperature in accordance with the thermostat installation instructions. If the thermostat contains a logic circuit requiring 24-v power, use a thermostat cable or equivalent single leads of different colors with minimum of seven leads (see Fig. 33). If the thermostat does not require a 24-v source (no "C" connection required), use a thermostat cable or equivalent with minimum of six leads. Check the thermostat installation instructions for additional features which might require additional conductors in the cable. For wire runs up to 50 ft. (15 m), use no. 18 AWG (American Wire Gauge) insulated wire [35°C (95°F) minimum]. For 50 to 75 ft. (15 to 23 m), use no. 16 AWG insulated wire [35°C (95°F) minimum]. For over 75 ft. (23 m), use no. 14 AWG insulated wire [35°C (95°F) minimum]. All wire sizes larger than no. 18 AWG cannot be directly connected to the thermostat and will require a junction box and splice at the thermostat.

***Unit Without Thru-Base Connection Kit***

Pass the thermostat control wires through the hole provided in the corner post; then feed the wires through the raceway built into the corner post to the control box. Pull the wires over to the terminal strip on the upper-left corner of the Controls Connection Board. See Fig. 32.

NOTE: If thru-the-bottom connections accessory is used, refer to the accessory installation instructions for information on routing power and control wiring.

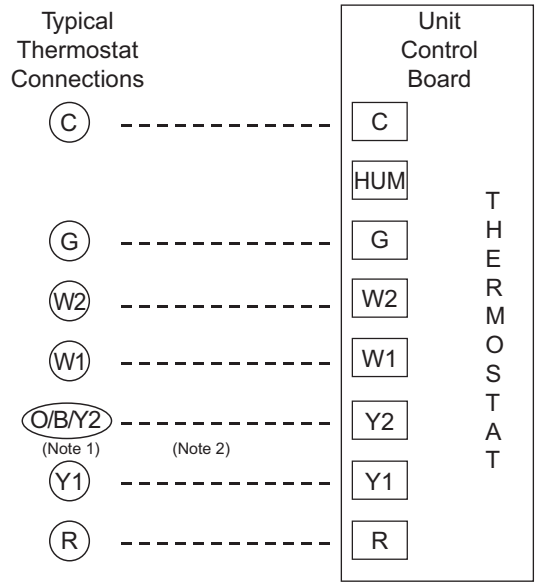


Note 1: Typical multi-function marking. Follow manufacturer's configuration Instructions to select Y2.

Note 2: Y2 to Y2 connection required on single-stage cooling units when integrated economizer function is desired.

- - - Field Wiring

**Fig. 33 — Low-Voltage Connections**

HUMIDI-MIZER® CONTROL CONNECTIONS

***Humidi-MiZer – Space RH Controller***

NOTE: The Humidi-MiZer is a factory installed option.

The Humidi-MiZer dehumidification system requires a field-supplied and field-installed space relative humidity control device. This device may be a separate humidistat control (contact closes on rise in space RH above control setpoint) or a combination thermostat-humidistat control device such as Carrier's Edge® Pro Thermidistat™ device with isolated contact set for dehumidification control. (see Fig. 34 and 35). The humidistat is normally used in applications where a temperature control is already provided (units with SystemVu™ control).

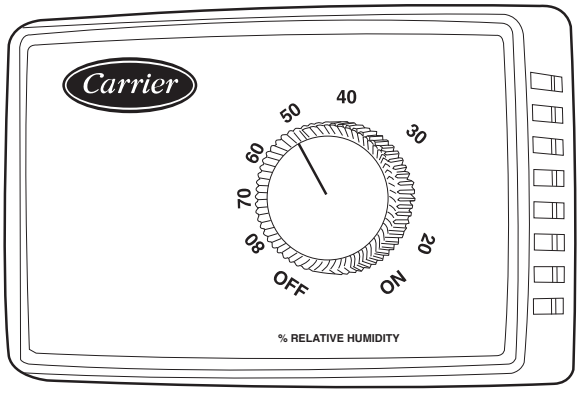


**Fig. 34 — Accessory Field-Installed Humidistat**

**Fig. 35 — Edge® Pro Thermidistat**

To Connect the Carrier Humidistat (HL38MG029):

1. Route the humidistat 2-conductor cable (field-supplied) through the hole provided in the unit corner post.
2. Feed wires through the raceway built into the corner post (see Fig. 32) to the 24v barrier located on the left side of the control box. The raceway provides the UL-required clearance between high-voltage and low-voltage wiring.
3. Connect one of the leads from the 2-conductor cable to the HUM terminal on the UCB (Unit Control Board). Connect the other lead to the R terminal on the UCB. See Fig. 36.

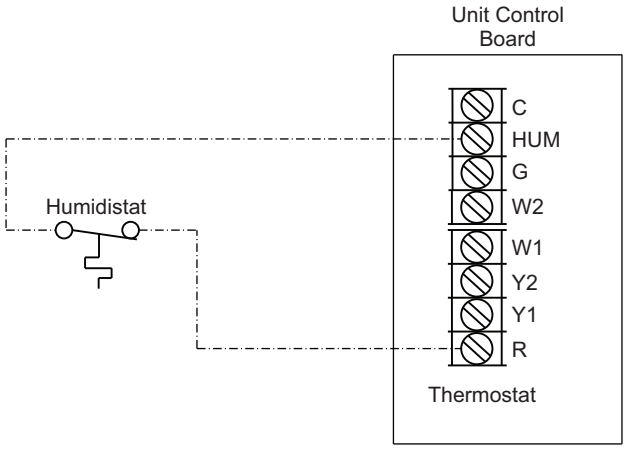


**Fig. 36 — Humidistat Connections to UCB**

To connect the Thermidistat device (33CS2PPRH-01):

1. Route the Thermidistat multi-conductor thermostat cable (field-supplied) through the hole provided in the unit corner post.
2. Feed wires through the raceway built into the corner post (see Fig. 32) to the 24-v barrier located on the left side of the control box. The raceway provides the UL-required clearance between high-voltage and low-voltage wiring.
3. The Thermidistat has dry contacts at terminals D1 and D2 for dehumidification operation (see Fig. 37). Connect D1 to the R terminal on the UCB. Connect D2 to the HUM terminal on the UCB. Refer to the installation instructions included with the Carrier Edge® Pro Thermidistat device for more information.

TYPICAL UNIT WIRING DIAGRAMS

See Fig. 38-41 for examples of typical unit control and power wiring diagrams. These wiring diagrams are mounted on the inside of the unit control box cover. Refer to the wiring diagrams in the unit control box when making field power wiring connections.

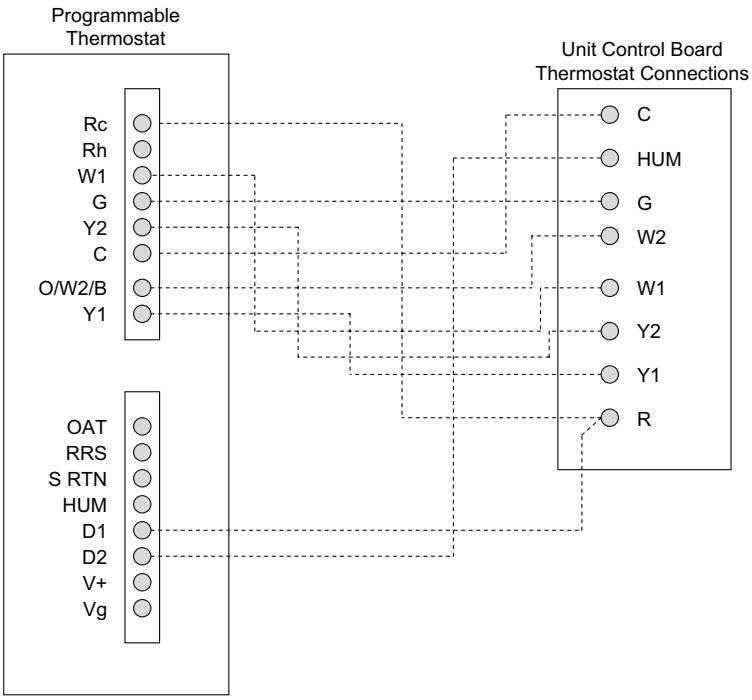


**Fig. 37 — Typical 48FE**08-12 Unit with Humidi-MiZer Adaptive Dehumidification System and Edge® Pro Thermidistat Device**

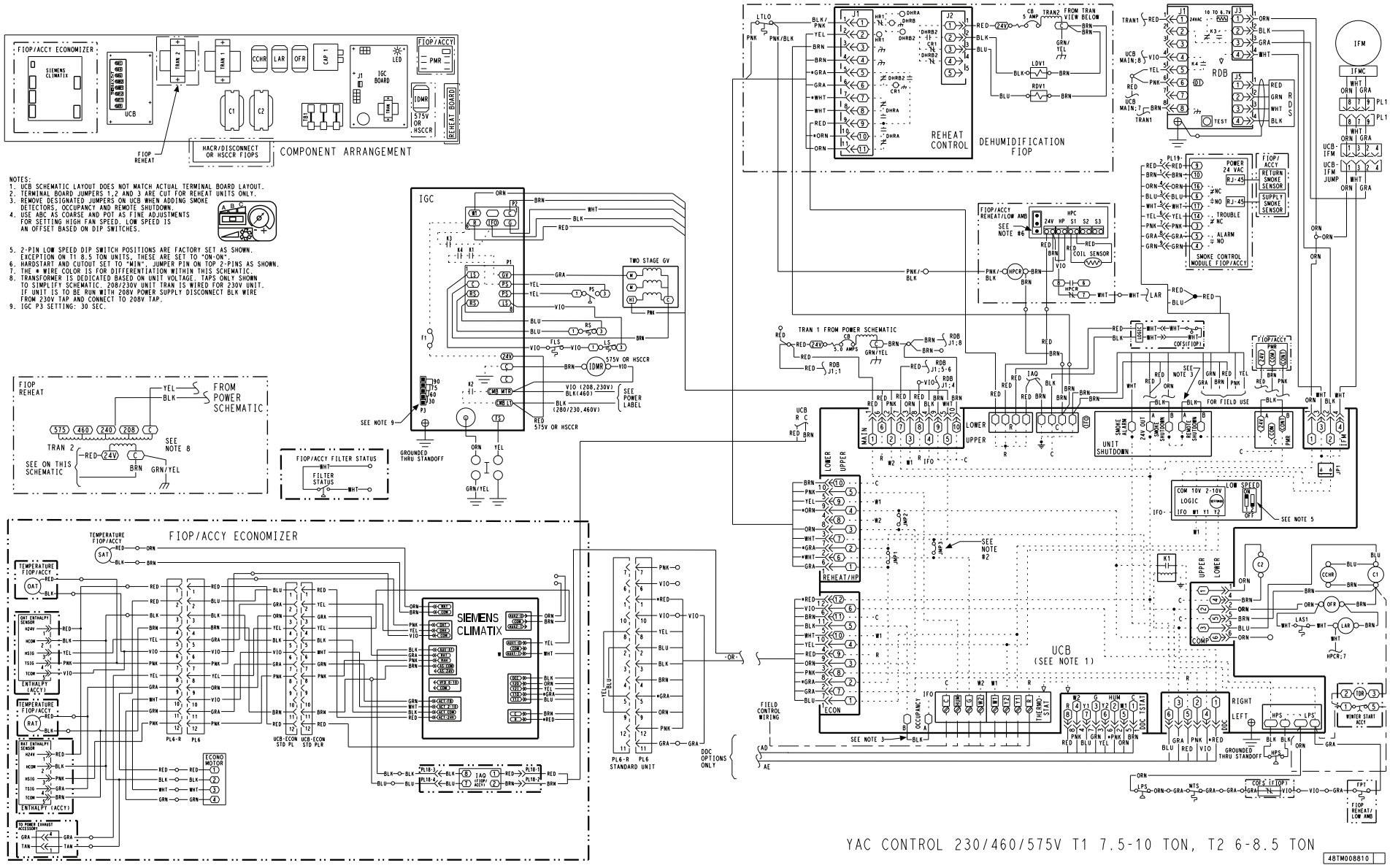


**Fig. 38 — Typical Control Wiring Diagram, Electro-Mechanical with POL224 – 48FE 08-12, 230/460/575-3-60 Units Shown**

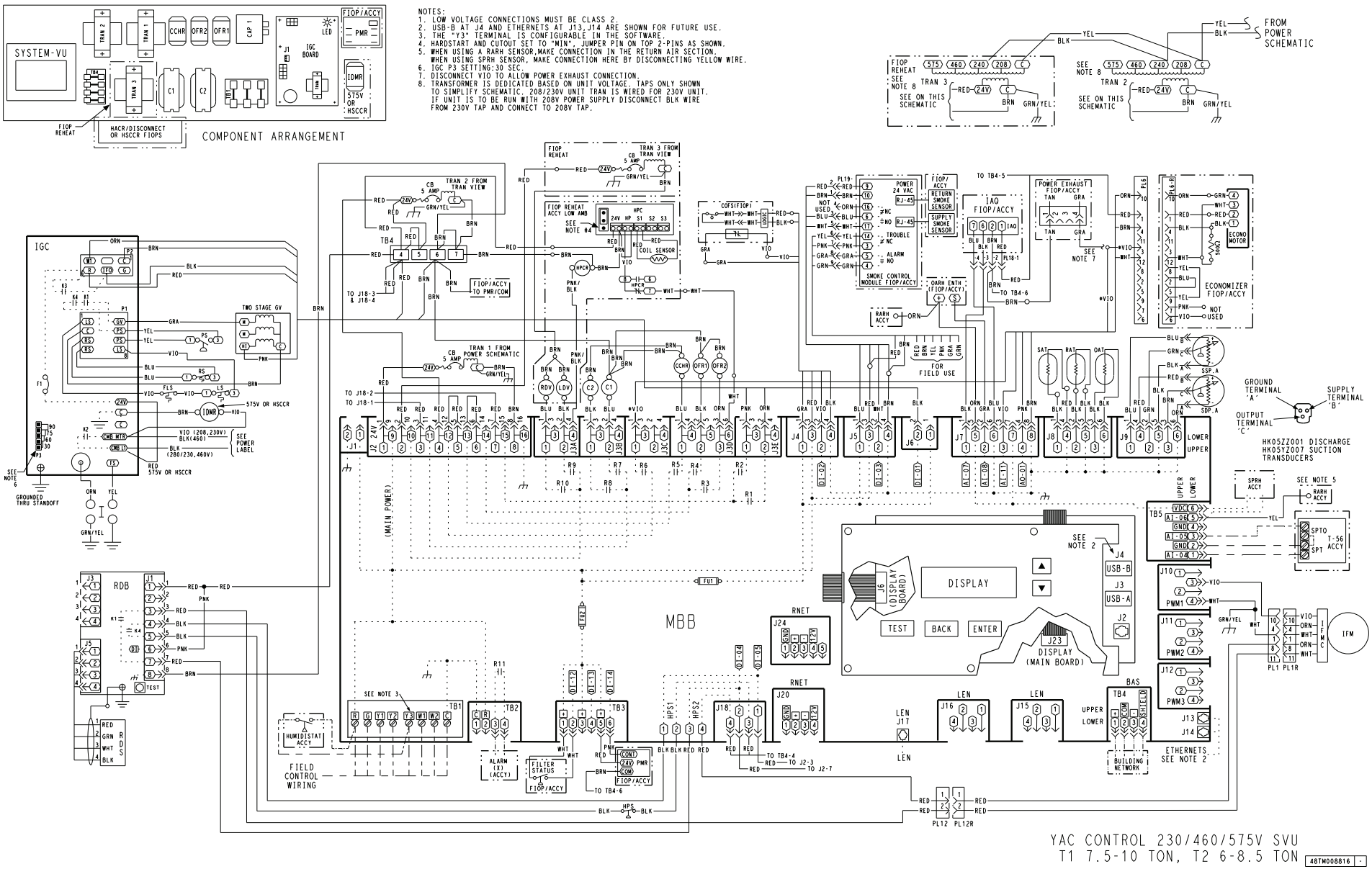


**Fig. 39 — Typical Control Wiring Diagram, SystemVu™ Controller – 48FE 08-12 230/460/575-3-60 Unit Shown**

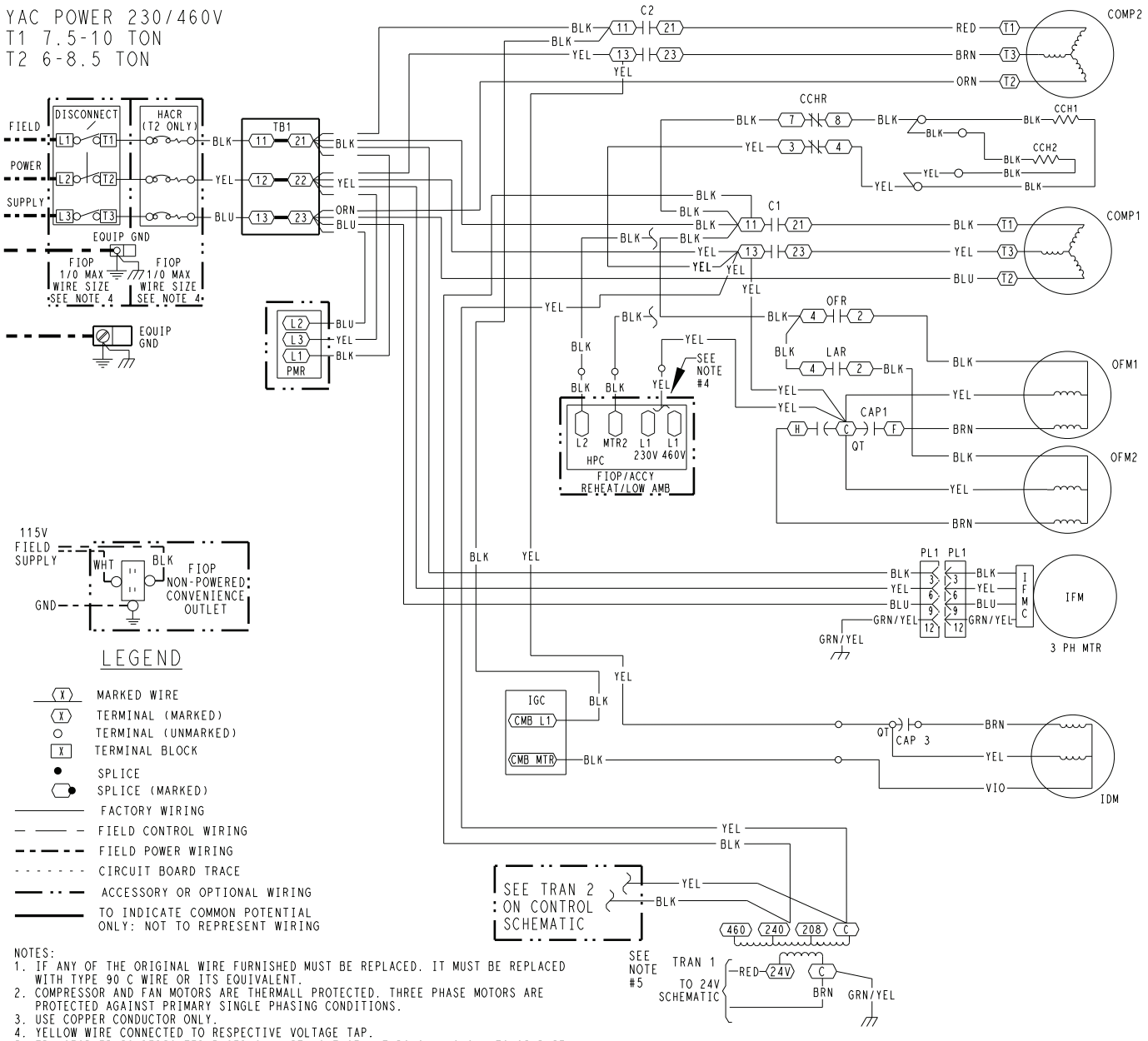


NOTES:
1. IF ANY OF THE ORIGINAL WIRE FURNISHED MUST BE REPLACED. IT MUST BE REPLACED WITH TYPE 90 C WIRE OR ITS EQUIVALENT.
2. COMPRESSOR AND FAN MOTORS ARE THERMALL PROTECTED. THREE PHASE MOTORS ARE PROTECTED AGAINST PRIMARY SINGLE PHASING CONDITIONS.
3. USE COPPER CONDUCTOR ONLY.
4. YELLOW WIRE CONNECTED TO RESPECTIVE VOLTAGE TAP.
5. TRANSFORMER IS DEDICATED BASED ON UNIT VOLTAGE. TAPS ONLY SHOWN TO SIMPLIFY SCHEMATIC. 208/230V UNIT TRAN IS WIRED FOR 230V UNIT. IF UNIT IS TO BE RUN WITH 208V POWER SUPPLY DISCONNECT BLK WIRE FROM 230V TAP AND CONNECT TO 208V TAP.

| | |
|---|---|
| ACCY | ACCESSORY |
| AMB | AMBIENT |
| C | CONTACTOR,COMPRESSOR |
| CAP | CAPACITOR |
| CB | CIRCUIT BREAKER |
| CCH | CRANKCASE HEATER |
| CCHR | CRANKCASE HEATER RELAY |
| CMB | COMBUSTION |
| COFS | CONDENSATE OVERFLOW SWT |
| COMP | COMPRESSOR MOTOR |
| DDC | DIRECT DIGITAL CONTROL |
| ERV | ENERGY RECOVERY VENTILATOR |
| FIOP | FACTORY INSTALLED OPTION |
| FLS | FAN LIMIT SWITCH |
| FPT | FREEZE PROTECTION THERMOSTAT |
| FSD | FIRE SHUT DOWN |
| FS | FLAME SENSOR |
| FU | FUSE |
| GND | GROUND |
| GVR | GAS VALVE RELAY |
| HPC | HEAD PRESSURE CONTROL |
| HPS | HIGH PRESSURE SWITCH |
| HS | HALL EFFECT SENSOR |
| I | IGNITOR |
| IAQ | INDOOR AIR QUALITY SENSORS |
| IDM | INDUCED DRAFT MOTOR |
| IFCB | INDOOR FAN CIRCUIT BREAKER |
| IFM | INDOOR FAN MOTOR |
| IFMC | INDOOR FAN CONTROLLER |
| IGC | INTEGRATED GAS CONTROL |
| JMP | JUMPER |
| LA | LOW AMBIENT |
| LAR | LOW AMBIENT RELAY |
| LDV | LIQUID DIVERTER VALVE |
| LPS | LOW PRESSURE SWITCH |
| LSM | LIMIT SWITCH (MANUAL RESET) |
| LS | LIMIT SWITCH |
| LTLO | LOW TEMPERATURE LOCKOUT |
| MGV | MAIN GAS VALVE |
| MOV | VOLTAGE RESTRICTOR |
| MTR | MOTOR |
| MTS | MIXED AIR TEMPERATURE SWITCH |
| OAQ | OUTDOOR AIR QUALITY |
| OARH | OUTSIDE AIR RELATIVE HUMIDITY |
| OAT | OUTDOOR AIR TEMP. SENSOR |
| OFM | OUTDOOR FAN MOTOR |
| OFR | OUTDOOR FAN RELAY |
| OL | OVERLOAD |
| PL | PLUG ASSEMBLY |
| POT | POTENTIOMETER |
| PMR | PHASE MONITOR RELAY |
| QT | QUADRUPLE TERMINAL |
| RARH | RETURN AIR RELATIVE HUMIDITY |
| RAT | RETURN AIR TEMP. SENSOR |
| RDB | REFRIGERANT DISSIPATION BOARD |
| RDS | REFRIGERANT DISSIPATION SENSOR |
| RDV | REHEAT DISCHARGE VALVE |
| RS | ROLLOUT SWITCH |
| SAT | SUPPLY AIR TEMP. SENSOR |
| SEN | SENSOR |
| SPRH | SPACE RELATIVE HUMIDITY |
| SPT | SPACE TEMPERATURE SENSOR |
| SPTO | SPACE TEMPERATURE OFFSET |
| STD | STANDARD |
| TB | TERMINAL BLOCK |
| TDR | TIME DELAY RELAY(WINTER START) |
| TRAN | TRANSFORMER |
| UCB | UNIT CONTROL BOARD |

48TM005719 | F

**Fig. 40 — Typical Power Wiring Diagram, for Electro-Mechanical Units, 48FE 08-12, 230/460-3-60 Units Shown**

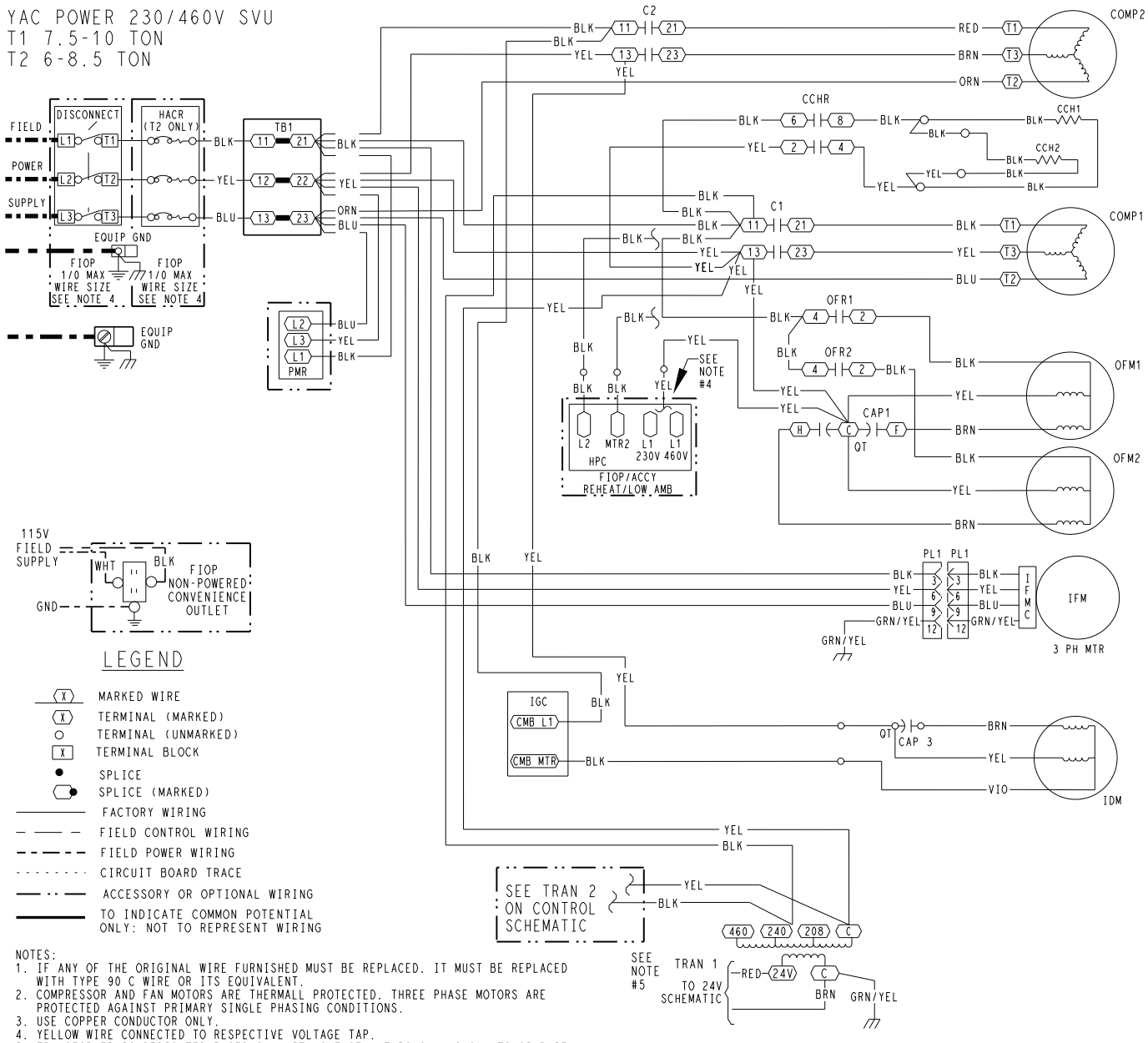


NOTES:
1. IF ANY OF THE ORIGINAL WIRE FURNISHED MUST BE REPLACED. IT MUST BE REPLACED WITH TYPE 90 C WIRE OR ITS EQUIVALENT.
2. COMPRESSOR AND FAN MOTORS ARE THERMALL PROTECTED. THREE PHASE MOTORS ARE PROTECTED AGAINST PRIMARY SINGLE PHASING CONDITIONS.
3. USE COPPER CONDUCTOR ONLY.
4. YELLOW WIRE CONNECTED TO RESPECTIVE VOLTAGE TAP.
5. TRANSFORMER IS DEDICATED BASED ON UNIT VOLTAGE. TAPS ONLY SHOWN TO SIMPLIFY SCHEMATIC. 208/230V UNIT TRAN IS WIRED FOR 230V UNIT. IF UNIT IS TO BE RUN WITH 208V POWER SUPPLY DISCONNECT BLK WIRE FROM 230V TAP AND CONNECT TO 208V TAP.

| | |
|---|---|
| ACCY | ACCESSORY |
| AMB | AMBIENT |
| C | CONTACTOR,COMPRESSOR |
| CAP | CAPACITOR |
| CB | CIRCUIT BREAKER |
| CCH | CRANKCASE HEATER |
| CCHR | CRANKCASE HEATER RELAY |
| CMB | COMBUSTION |
| COFS | CONDENSATE OVERFLOW SWT |
| COMP | COMPRESSOR MOTOR |
| DDC | DIRECT DIGITAL CONTROL |
| ERV | ENERGY RECOVERY VENTILATOR |
| FIOP | FACTORY INSTALLED OPTION |
| FLS | FAN LIMIT SWITCH |
| FPT | FREEZE PROTECTION THERMOSTAT |
| FSD | FIRE SHUT DOWN |
| FS | FLAME SENSOR |
| FU | FUSE |
| GND | GROUND |
| GVR | GAS VALVE RELAY |
| HPC | HEAD PRESSURE CONTROL |
| HPS | HIGH PRESSURE SWITCH |
| HS | HALL EFFECT SENSOR |
| I | IGNITOR |
| IAQ | INDOOR AIR QUALITY SENSORS |
| IDM | INDUCED DRAFT MOTOR |
| IFCB | INDOOR FAN CIRCUIT BREAKER |
| IFM | INDOOR FAN MOTOR |
| IFMC | INDOOR FAN CONTROLLER |
| IGC | INTEGRATED GAS CONTROL |
| JMP | JUMPER |
| LA | LOW AMBIENT |
| LDV | LIQUID DIVERTER VALVE |
| LPS | LOW PRESSURE SWITCH |
| LSM | LIMIT SWITCH (MANUAL RESET) |
| LS | LIMIT SWITCH |
| LTLO | LOW TEMPERATURE LOCKOUT |
| MGV | MAIN GAS VALVE |
| MOV | VOLTAGE RESTRICTOR |
| MTR | MOTOR |
| MTS | MIXED AIR TEMPERATURE SWITCH |
| OAQ | OUTDOOR AIR QUALITY |
| OARH | OUTSIDE AIR RELATIVE HUMIDITY |
| OAT | OUTDOOR AIR TEMP. SENSOR |
| OFM | OUTDOOR FAN MOTOR |
| OFR | OUTDOOR FAN RELAY |
| OL | OVERLOAD |
| PL | PLUG ASSEMBLY |
| POT | POTENTIOMETER |
| PMR | PHASE MONITOR RELAY |
| QT | QUADRUPLE TERMINAL |
| RARH | RETURN AIR RELATIVE HUMIDITY |
| RAT | RETURN AIR TEMP. SENSOR |
| RDB | REFRIGERANT DISSIPATION BOARD |
| RDS | REFRIGERANT DISSIPATION SENSOR |
| RDV | REHEAT DISCHARGE VALVE |
| RS | ROLLOUT SWITCH |
| SAT | SUPPLY AIR TEMP. SENSOR |
| SEN | SENSOR |
| SPRH | SPACE RELATIVE HUMIDITY |
| SPT | SPACE TEMPERATURE SENSOR |
| SPTO | SPACE TEMPERATURE OFFSET |
| STD | STANDARD |
| TB | TERMINAL BLOCK |
| TDR | TIME DELAY RELAY(WINTER START) |
| TRAN | TRANSFORMER |
| UCB | UNIT CONTROL BOARD |

48TM008212 | B

**Fig. 41 — Typical Power Wiring Diagram, for SystemVu™ Controller Units, 48FE 08-12, 230/460-3-60 Units Shown**

## Integrated Gas Controller

This unit contains an Integrated Gas Controller (IGC) board. The IGC control board uses a flue gas pressure switch that senses pressure drop in the heat exchanger due to the combustion inducer. See Fig. 42.

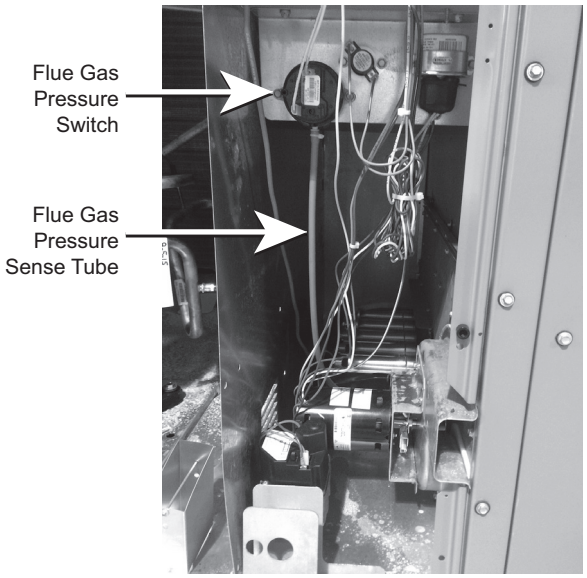


**Fig. 42 — Flue Gas Pressure Switch and Pressure Sense Tube (Typical Location)**

When the thermostat calls for heating, power is sent to W on the Integrated Gas Controller (IGC) board. An LED (light emitting diode) on the IGC board turns on and remains on during normal operation. A check is made to ensure that the rollout switch and limit switch are closed, and that the pressure switch is open. If the check was successful, the induced draft motor is energized. When the pressure in the heat exchanger is low enough to close the pressure switch, the ignition activation period begins. Once ignition occurs, the IGC board will continue to monitor the condition of the rollout switch, the limit switches, the pressure switch, and the flame sensor. Assuming the unit is controlled through a room thermostat set for "fan auto," 45 seconds after ignition occurs, the indoor fan motor will energize, and the outdoor air dampers will open to their minimum position. If the "over temperature limit" opens prior to the start of the indoor fan blower, the IGC will shut down the burners, and the control will shorten the 45 second delay to 5 seconds less than the time to trip the limit. For example, if the limit trips at 37 seconds, the control will change the "fan on delay" from 45 seconds to 32 seconds. Once the "fan on delay" has been modified, it will not change back to 45 seconds unless power is reset to the control. On units with 2 stages of heat, W2 closes and initiates power to the second stage of the main gas valve when additional heat is required.

When the thermostat is satisfied, W1 and W2 open and the gas valve closes, interrupting the flow of gas to the main burners. If the call for W1 lasted less than 1 minute, the heating cycle will not terminate until 1 minute after W1 became active. If the unit is controlled through a room thermostat set for fan auto, the indoor fan motor will continue to operate for an additional 90 seconds, then stop. An LED indicator is provided on the IGC to monitor operation.

See Fig. 43 for IGC board component layout. Figure 44 is a typical IGC control wiring diagram. Table 8 lists the IGC Board LED Alarm Codes.

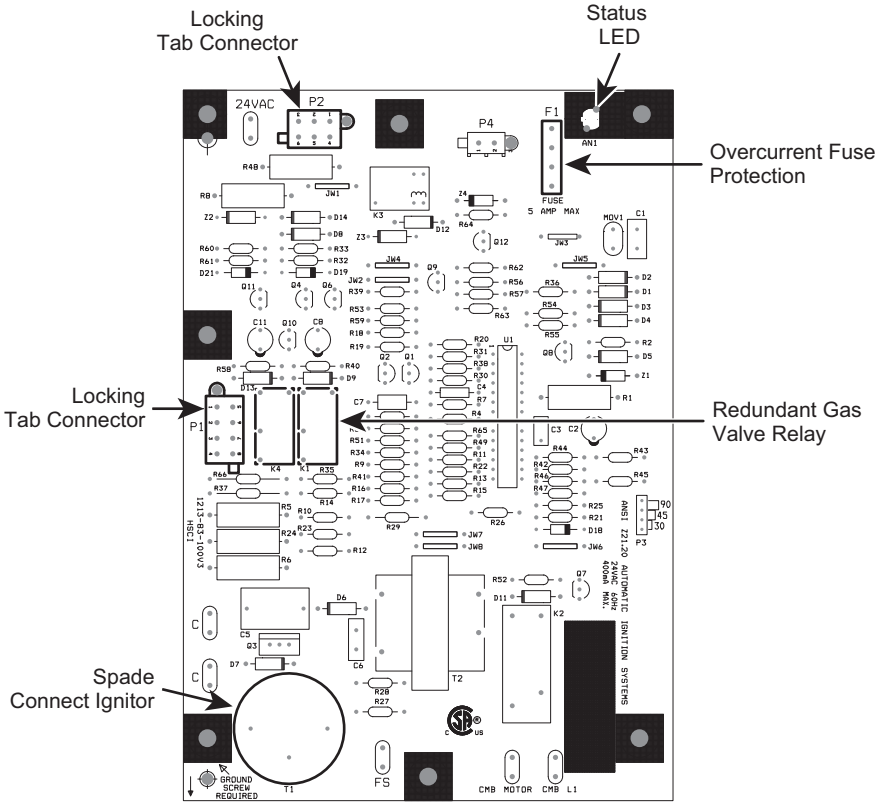


**Fig. 43 — IGC Board Component Layout**

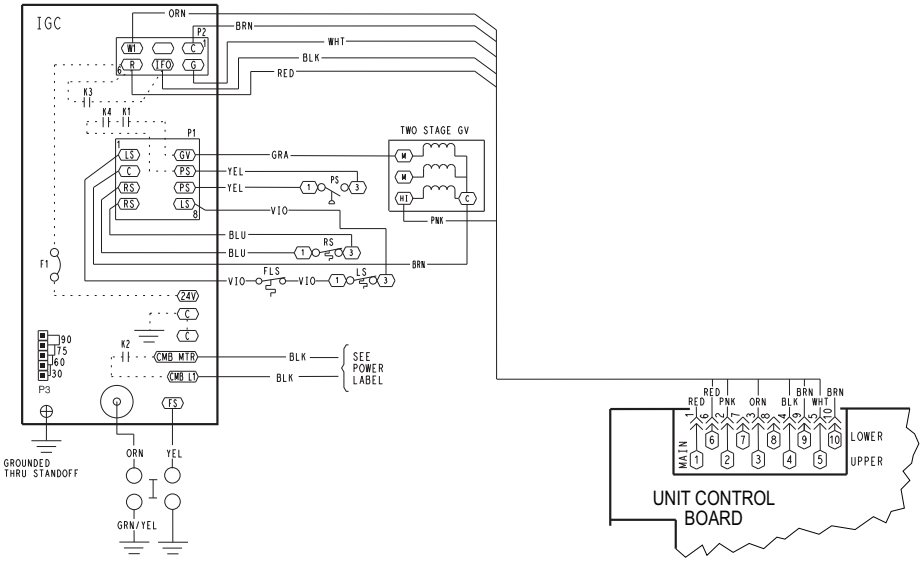


**Fig. 44 — Typical IGC Control Wiring Diagram**

**Table 8 — IGC Board LED Alarm Codes[a,b,c,d]**

| LED FLASH CODE | DESCRIPTION | ACTION TAKEN BY CONTROL | RESET METHOD | PROBABLE CAUSE |
|---|---|---|---|---|
| **On** | Normal Operation | — | — | — |
| **Off** | Hardware Failure | No gas heating. | — | Loss of power to the IGC. Check 5 amp fuse on IGC, power to unit, 24V circuit breaker, transformer, and wiring to the IGC. |
| **1 Flash** | Indoor Fan On/Off Delay Modified | 5 seconds subtracted from On delay. | Power reset. | High temperature limit switch opens during heat exchanger warm-up period before fan-on delay expires. |
| **2 Flashes** | Limit Switch Fault | Gas valve and igniter Off. Indoor fan and inducer On. | Limit switch closed, or heat call (W) Off. | High temperature limit switch is open. Check the operation of the indoor (evaporator) fan motor. Ensure that the supply-air temperature rise is within the range on the unit nameplate. Check wiring and limit switch operation. |
| **3 Flashes** | Flame Sense Fault | Indoor fan and inducer On. | Flame sense normal. Power reset for LED reset. | The IGC sensed a flame when the gas valve should be closed. Check wiring, flame sensor, and gas valve operation. |
| **4 Flashes** | Four Consecutive Limit Switch Fault | No gas heating. | Heat call (W) Off. Power reset for LED reset. | 4 consecutive limit switch faults within a single call for heat. See Limit Switch Fault. |
| **5 Flashes** | Ignition Fault | No gas heating. | Heat call (W) Off. Power reset for LED reset. | Unit unsuccessfully attempted ignition for 15 minutes. Check igniter and flame sensor electrode spacing, gaps, etc. Check flame sense and igniter wiring. Check gas valve operation and gas supply. |
| **6 Flashes** | Induced Draft Motor Fault/Pressure Switch Fault | If heat off: no gas heating. If heat on: gas valve Off and inducer On. | Inducer sense normal, or heat call (W) Off. | Inducer sense On when heat call Off, or inducer sense Off when heat call On. Check wiring, voltage, and operation of IGC motor. Check Inducer Pressure Switch. |
| **7 Flashes** | Rollout Switch Lockout | Gas valve and igniter Off. Indoor fan and inducer On. | Power reset. | Rollout switch has opened. Check gas valve operation. Check induced-draft blower wheel is properly secured to motor shaft. |
| **8 Flashes** | Internal Control Lockout | No gas heating. | Power reset. | IGC has sensed internal hardware or software error. If fault is not cleared by resetting 24 v power, replace the IGC. |
| **9 Flashes** | Temporary Software Lockout | No gas heating. | 1 hour auto reset, or power reset. | Electrical interference is disrupting the IGC software. |

NOTE(S):

a. There is a 3-second pause between alarm code displays.
b. If more than one alarm code exists, all applicable alarm codes will be displayed in numerical sequence.
c. Alarm codes on the IGC will be lost if power to the unit is interrupted.
d. If the flue gas pressure switch is stuck closed on a W1 call, then the unit will sit idle, and the IGC will produce no fault codes.

LEGEND

**IGC** — Integrated Gas Unit Control
**LED** — Light-Emitting Diode

## Leak Dissipation System

48FE units use R-454B refrigerant. These units are equipped with a factory installed R-454B leak dissipation system to ensure safe operation in the event of a refrigerant leak. This systems consists of an A2L sensor (Fig. 45) and the dissipation control board (see Fig. 46) which are located in the Indoor Coil section of the unit (see the view labeled "BACK" in Fig. 2 on page 7). The A2L sensor is located between the indoor coil and the air filters.

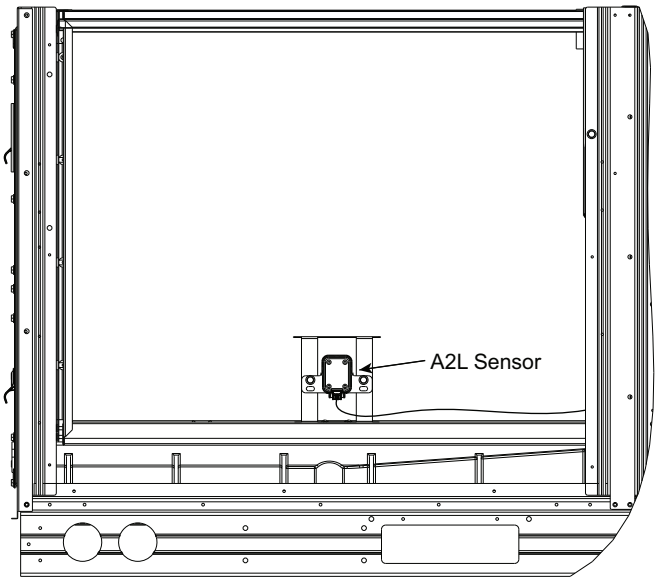


**Fig. 45 — Location of A2L Sensor**

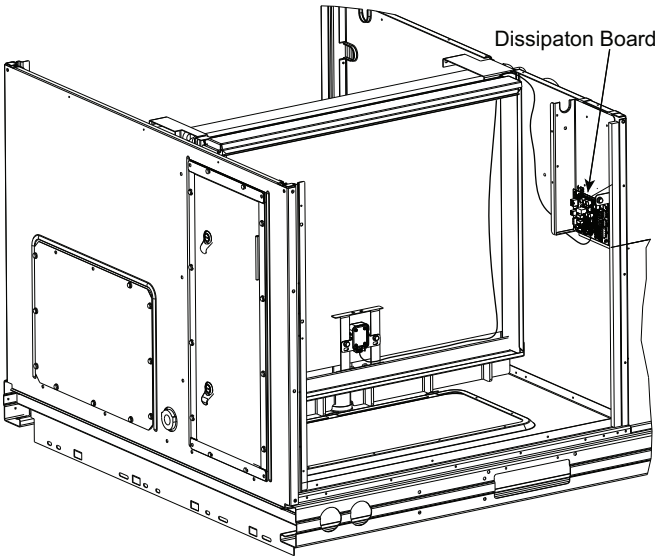


**Fig. 46 — Location of Dissipation Control Board (Shown with Dust Cover Removed)**

The A2L detection sensor communicates via a wiring harness to the dissipation board The sensor harness is routed on the bottom of the filter rack towards the unit bulkhead and secured with wire ties. The sensor harness then runs up the side of the filter rack and exits over the top of the rack towards the dissipation board.

NOTE: The drain wire must be properly connected to the ground lug on the dissipation board via the quick connect and ground harness. Failure of proper sensor harness grounding can lead to false dissipation events.

SEQUENCE OF OPERATION

The control functions as an R-454B refrigerant dissipation system. If the refrigerant detection sensor sends a signal indicating a refrigerant leak, the control board will prevent heating and cooling operation and begin dissipating the sensed refrigerant with a blower request. The refrigerant dissipation board will display a flash code from the yellow status LED (see Fig. 47) indicating the sensor that detected the refrigerant. See Fig. 49 — on page 30 for the full text on the Dissipation Control dust cover label.

When the sensor signal indicates the refrigerant has dissipated, the dissipation board yellow status LED will display a flash code 3 and return to its normal state and allow unit operations after a 5 minute delay.

LEAK DISSIPATION SYSTEM SELF-TEST

Power on the unit and verify proper functioning of equipment. The yellow Status LED on the dissipation board should be steady (see Fig. 47). If flash codes are present, see Troubleshooting on page 30.

NOTE: Operation of the Test Mode is only possible if no faults exist on the dissipation board.

Remove the dust cover from the Dissipation control board to access the Test button (see Fig. 48). The Test button is located above the COMM LED.

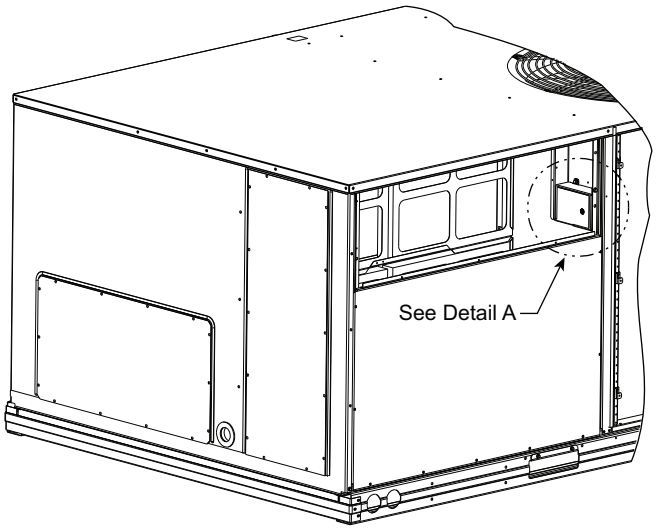


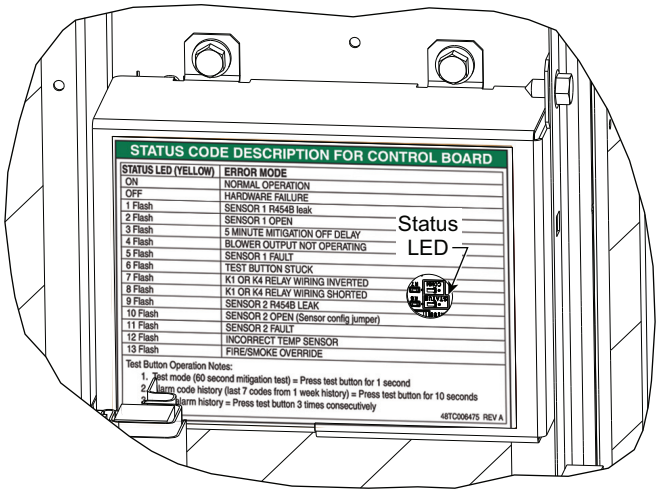


Detail A

**Fig. 47 — Yellow STATUS LED**

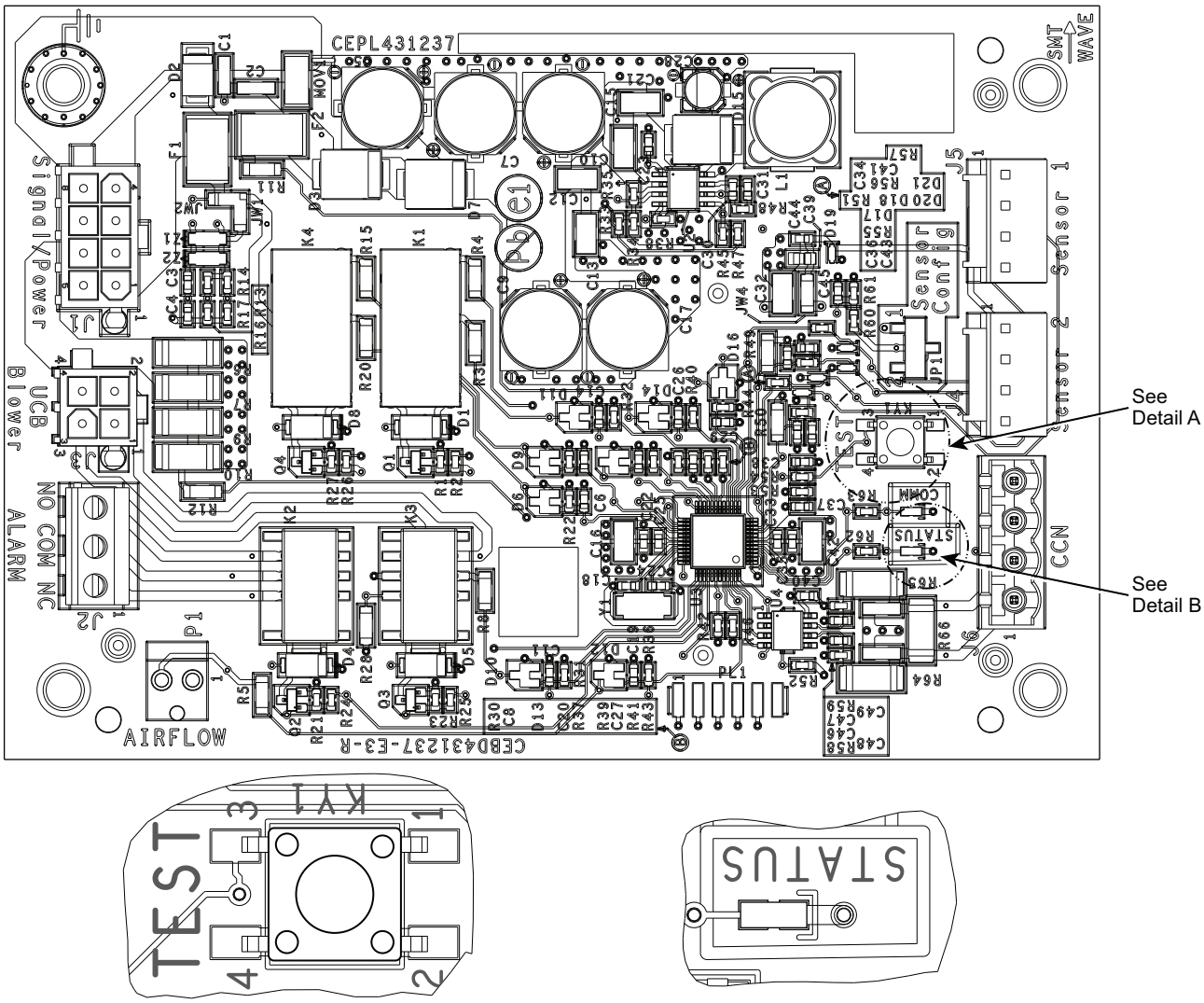


**Fig. 48 — Dissipation Control Board — Shown without Dust Cover**

Press the Test button on the dissipation system control board to ensure proper dissipation system operation under each test condition listed below. After pressing the Test button, system will enter Dissipation Mode for 60 seconds to help verify correct operation.

IMPORTANT: Press the Test button for roughly ONE SECOND to enter Test Mode. Pressing the Test button for a longer periods enables different functions (see Table 9).

### Table 9 — Dissipation Board Test Button Functions

| HOLD BUTTON TIME (SEC) | FUNCTION |
|---|---|
| **1-4** | Dissipation Mode for 60 seconds |
| **5-29** | Display flash code history |
| **30+** | Flash code 6 |
| **3 Rapid Presses** | Clear flash code history |

Ensure that the unit is able to meet the minimum required dissipation mode airflows. These required minimum airflow rates during Dissipation Mode are listed in Table 10. They are based on the total system refrigerant charge quantity.

### Table 10 — Minimum Dissipation Air Flows

| MINIMUM DISSIPATION AIR FLOW (cfm) | |
|---|---|
| **UNIT** | **cfm** |
| **48FE*M08** | 280 |
| **48FE*M09** | 290 |
| **48FE*M12** | 390 |
| **48FE*N08** | 360 |
| **48FE*N09** | 480 |
| **48FE*N12** | 590 |

Table 11 details the required operational checks to ensure proper dissipation system function.

### Table 11 — Dissipation System Required Operational Checks

| NORMAL OPERATION | | | | |
|---|---|---|---|---|
| **TEST NO.** | **UNIT DEMAND** | **COMPRESSOR** | **INDOOR FAN** | **ELECTRIC/ GAS HEAT** |

### Table 11 — Dissipation System Required Operational Checks

| | | | | |
|---|---|---|---|---|
| **NORMAL OPERATION** | | | | |
| **1** | None | Off | Off | Off |
| **2** | Cool | On | On | Off |
| **3** | Heat | On | On | On |
| **DISSIPATION ACTIVATED** | | | | |
| **4** | None | Off | On | Off |
| **5** | Cool | Off | On | Off |
| **6** | Heat | Off | On | Off |

Figure 50 shows the flash codes displayed on the Dissipation control board.

TROUBLESHOOTING

For all flash codes, first try power cycling the system to remove the code.

***No Power***

Verify the wiring to/from pins 1 and 8 on the power harness plug. Check the 24V system wiring from the transformer.

See Table 12 for details on the operating status and troubleshooting of the Dissipation system for the various flash codes.

**STATUS CODE DESCRIPTION FOR CONTROL BOARD**

| STATUS LED (YELLOW) | ERROR MODE |
|---|---|
| ON | NORMAL OPERATION |
| OFF | HARDWARE FAILURE |
| 1 Flash | SENSOR 1 R454B leak |
| 2 Flash | SENSOR 1 OPEN |
| 3 Flash | 5 MINUTE MITIGATION OFF DELAY |
| 4 Flash | BLOWER OUTPUT NOT OPERATING |
| 5 Flash | SENSOR 1 FAULT |
| 6 Flash | TEST BUTTON STUCK |
| 7 Flash | K1 OR K4 RELAY WIRING INVERTED |
| 8 Flash | K1 OR K4 RELAY WIRING SHORTED |
| 9 Flash | SENSOR 2 R454B LEAK |
| 10 Flash | SENSOR 2 OPEN (Sensor config jumper) |
| 11 Flash | SENSOR 2 FAULT |
| 12 Flash | INCORRECT TEMP SENSOR |
| 13 Flash | FIRE/SMOKE OVERRIDE |

Test Button Operation Notes:

1. Test mode (60 second mitigation test) = Press test button for 1 second
2. Alarm code history (last 7 codes from 1 week history) = Press test button for 10 seconds
3. Clear alarm history = Press test button 3 times consecutively

48TC006475 REV A

**Fig. 49 — Dissipation Control Cover Label**

### Table 12 — Status LED Troubleshooting Table

| STATUS LED | REASON | CONTROL VERBIAGE | MODE |
|---|---|---|---|
| **1 Flash** | Sensor 1 ≥ 20% LFL | REFRIG DISSIPATION ACTIVE | Dissipation in Process |
| **2 Flash** | Sensor 1 Open | REFRIG SENSOR OPEN | Dissipation in Process |
| **3 Flash** | 5 Minute Blower Operating, Sensor < 20% LFL and sensors are not opened (done after fault 1, 2, 9 and 10) | DISSIPATION OFF DELAY ACTIVE | Dissipation in Process |
| **4 Flash** | 0 VAC sensed on G output. | BLOWER OUTPUT NOT OPERATING | Dissipation in Process |
| **5 Flash** | Fault with the A2L digital sensor | REFRIG SENSOR FAULT | Dissipation in Process |
| **6 Flash** | If KY1 is stuck pressed for more than 30 seconds. | TEST BUTTON STUCK | To prevent a shorted KY1 to keep the dissipation running continuously. |
| **7 Flash** | Y out switched with Y in or W out switched with W in | Y (K4) OR W (K1) WIRING INVERTED | Normal mode |
| **8 Flash** | Y or W shorted (relay detects both sides are high) | Y (K4) OR W (K1) OUTPUT SHORTED TO Y (K4) OR W (K1) INPUT | Normal mode |
| **9 Flash[a]** | Sensor 2 ≥ 20% LFL | SENSOR 2 DISSIPATION ACTIVE | Dissipation in Process |
| **10 Flash[a]** | Sensor 2 Open | SENSOR 2 OPEN | Dissipation in Process |
| **11 Flash[a]** | Fault with the second A2L digital sensor | SENSOR 2 FAULT | Dissipation in Process |
| **12 Flash** | High temperature sensor attached on commercial | OVERCURRENT INCORRECT SENSOR | Normal mode |
| **13 Flash** | G input signal is lost. Indicates another unit safety will override dissipation. | EXT SAFETY OVERRIDE | Normal mode |

NOTE(S):

a. There is only one sensor mounted in these units. This table represents the standard label being put on all commercial equipment. The hardware changes only allow one sensor to be connected to the board; the software remains the same for a one or two sensor board. Although unlikely these flash codes may appear if the board malfunctions.

LEGEND

**LFL** — Lower Flammable Limit

## Humidi-MiZer Dehumidification System (Optional)

Units with the factory-installed Humidi-MiZer system option are capable of providing multiple modes of improved dehumidification as a variation of the normal cooling cycle. The Humidi-MiZer system option includes additional valves in the liquid line and discharge line of the refrigerant circuit and a reheat coil downstream of the evaporator. Humidi-MiZer system operation requires the installation and configuration of a relative humidity switch input or a space relative humidity sensor. These provide the dehumidification demand to the control.

With Humidi-MiZer system units there are two additional HVAC modes available for the user: Dehumidification and Dehum/Mech Cooling. Selection of the Dehum/Mech Cooling mode is determined by the dehumidification demand and the cooling demand. Table 13 shows the corresponding circuit mode and output status for the different demand combinations.

NORMAL COOLING

This mode is the standard rated cooling system performance, and occurs when there is cooling demand without dehumidification demand.

For 48FE 08-12 units, refrigerant flows from the outdoor condenser through the de-energized 3-Way Liquid Diverter Valve (LDV) to the expansion device bypassing the reheat condenser coil. The Reheat Discharge Valve (RDV) is closed. (See Fig. 50.)

DEHUM/MECH COOLING (SUBCOOLING) MODE

This mode increases the latent heat removal and decreases sensible cooling compared to normal cooling. This occurs when there is a cooling and dehumidification demands.

For 48FE 08-12 units, refrigerant flows from the outdoor condenser, through the energized 3-Way LDV and through the reheat condenser coil to the expansion device. The RDV is closed. (See Fig. 51.)

DEHUMIDIFICATION (HOT GAS REHEAT) MODE

This mode provides maximum latent cooling with little to no sensible capacity. This occurs when there is a dehumidification demand and no cooling demand.

For 48FE 08-12 units, this is the same as the Subcooling mode but the RDV is open, which provides some compressor discharge gas to the reheat condenser to further increase the reheat of the evaporator air stream. (See Fig. 52.)

REHEAT CONTROL

When there is only a cooling demand, the unit will operate in normal cooling mode. When there is only dehumidification demand, the unit will operate in Dehumidification mode (Hot Gas Reheat). When there is both cooling demand and dehumidification demand, the unit will operate in Dehum/Mech Cooling mode (Subcooling). During Dehumidification and Dehum/Mech cooling mode, the unit will run all cooling stages.

**Table 13 — Humidi-MiZer System Control Modes (48FE 08-12)**

| DEMAND AND MODE | | | OUTPUTS | LDV Valve 3-WAY | RDV Valve 2-WAY |
|---|---|---|---|---|---|
| Space Humidity | Circuit Cooling Demand | Circuit Mode | Circuit Compressor | | |
| — | — | No power | Off | Off | Off (closed) |
| Low | No | Off | Off | Off | Off (closed) |
| | Yes | Cool | On | Off | Off (closed) |
| High | Yes | Dehum/Mech Cooling | On | On | Off (closed) |
| | No | Dehum | On | On | On (open) |

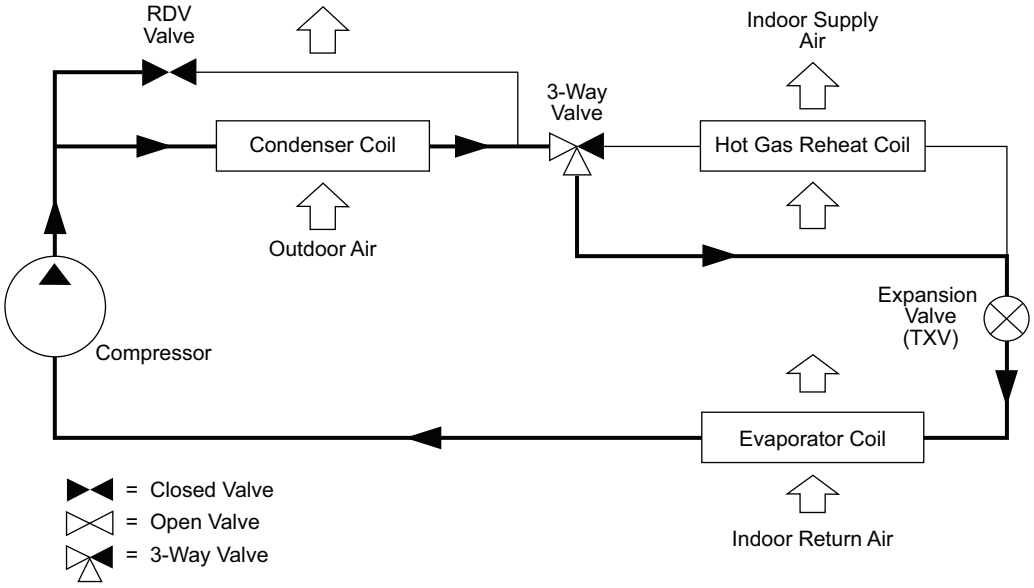


**Fig. 50 — Normal Cooling Mode – Humidi-MiZer System for 48FE 08-12**

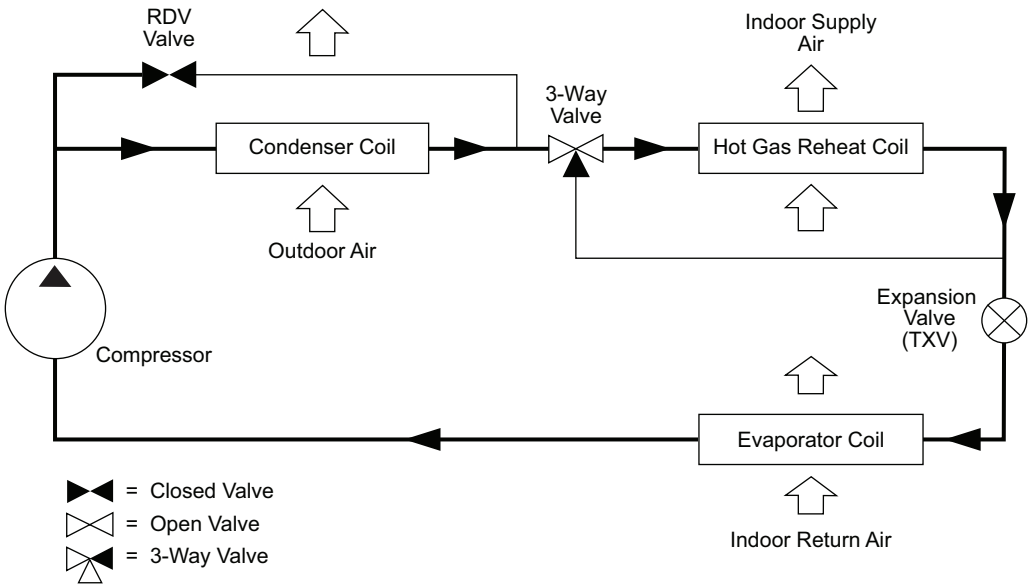


**Fig. 51 — Subcooling Mode – Humidi-MiZer System for 48FE 08-12**

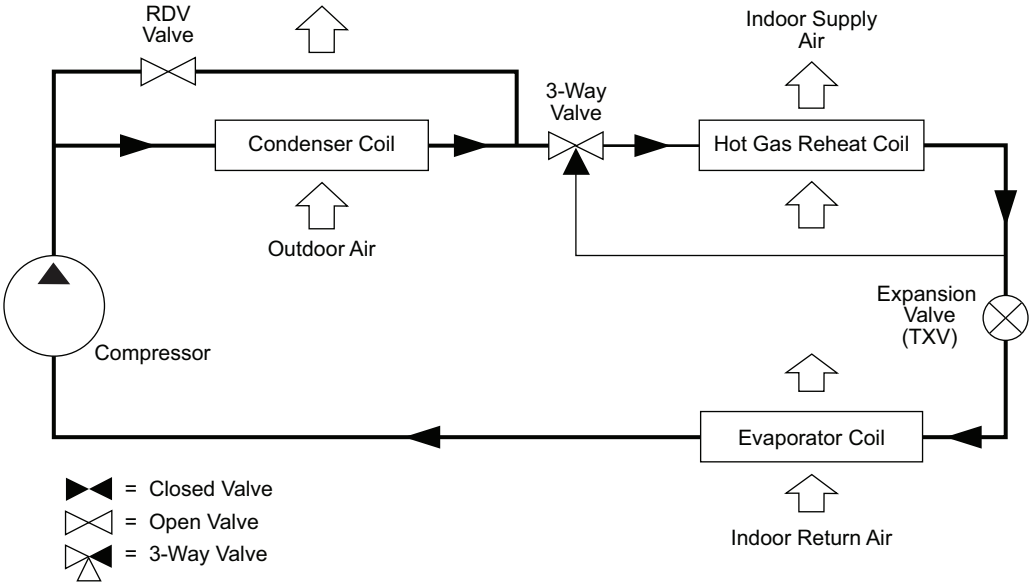


**Fig. 52 — Hot Gas Reheat Mode – Humidi-MiZer System for 48FE 08-12**

## Temporary Furnace Operation During Construction

The furnace may be operated during the finishing stage of construction. To ensure proper operation follow the steps below.

1. Prior to the finishing stage of construction, ensure that return air and vent openings are covered to minimize penetration of dust and construction debris into the unit.
2. Interior drywall installation shall be completed and covered with paint or primer prior to unit operation.
3. Premises shall be substantially free of debris and dust.
4. Ensure all return and vent coverings have been removed.
5. Verify the return ducts (except 100% OA) and supply ducts are connected, are free from obstructions, are clean, and are properly sealed.
6. Ensure proper vent installation per installation instructions.
7. Ensure gas piping has been connection per installation instructions.
8. Verify that the gas piping is free of leaks.
9. Furnace to be set to operate under appropriate control to ensure proper operation.
10. Minimum MERV 11 air filters to be installed during the finishing stages of construction.
11. Set furnace input rate and temperature rise per rating plate marking.
12. Ensure means for providing combustion air in accordance with the manufacturer's shipped installation instructions.
13. Return air temperature to be maintained between 55°F (13°C) and 80°F (27°C).
14. Furnace shall be set up to operate in accordance with installation instructions and shall be verified for operating conditions including ignition, input rate, temperature rise, and venting.
15. Install new filters as per installation instructions prior to final occupancy.

## EconomizerONE (Factory Option)

ECONOMIZER SETTINGS

***Interface Overview***

EconomizerONE

This option consists of the following:

- Low Leak Economizer Assembly
- HH79NZ039 OA (Outdoor Air) Dry Bulb Sensor
- HH79NZ039 Mixed Air Sensor
- POL224 Controller
- 48TC005897 Harness

POL224 Economizer Module Wiring

The economizer controller used on electromechanical units is a Siemens POL224, which is to be located in the RTU base unit's control box. See Fig. 53 for button description of the POL224 controller. Refer to the unit dimensional drawing for the location of the control box access panel.

The POL224 controller provides the following:

1. One-line LCD (Liquid Crystal Display) — After a period of inactivity, the controller displays the default HMI (Human Machine Interface) screen (free cooling status, 1FREE-COOL YES or 1FREE COOL NO). See Fig. 53-57.
2. Operation button (Up button) — Move to the previous value, step, or category.
3. Operation button (Down Button) — Move to the next value, step, or category.
4. Operation Button (Enter Button):
   a. Press Enter to edit the current value or option.
   b. Press Enter to confirm a newly selected value or option.
   c. Press Enter + Up to jump up one entire category.
   d. Press Enter + Down to jump down one entire category.

User Interface and Keypad

The controller user interface consists of an LCD display and a 3-button keypad for input. The LCD is a 16 character by 1-line dot matrix display. The keypad is used to navigate and change the desired menu items on the display. See Fig. 53.

The Climatix™[1] mobile application allows for installation, commissioning, and servicing. Scanning a QR code on the controller allows users to download the mobile application on Android™[1] or Apple iOS®[1], but a Wi-Fi/WLAN stick is needed. See Fig. 53 and 54. Plug Wi-Fi/WLAN stick into controller USB port for temporary connection for mobile application setup. The Wi-Fi/WLAN stick can be used for multiple units.

Menu Structure

Menus are displayed in the economizer controller via categories. There are eight first-level menus, each of which is represented by a number at the beginning of the line on the LCD. Pressing Enter + Up or Down can toggle between different first-level menus. Submenus follow the numbered first-level menus closely. Pressing Up or Down can toggle between different submenus.

At the end of the line, the LCD displays the value of the current submenu (if any). If the value is editable, pressing Enter will put the terminal in Edit mode. The value is then highlighted for change. After making a change by pressing Up or Down, press Enter to confirm the change and exit the Edit mode. See Fig. 56.

Powering the Economizer Controller

The POL224 controller power connections are made through the economizer harness (P/N 48TC005897). Connections from the harness are made to the C (24 vac common) and R (24 vac power) terminals of the economizer controller. See Fig. 55.

LED Indication

NOTE: If different faulty events occur at the same time, then sensor/DAC LED lights up following the priority below: Red → Yellow → Off. For example, if there is a humidity sensor error and air temperature failure at the same time, then the sensor LED turns red rather than yellow. See Fig. 57 and Table 14.

IMPORTANT: After the Economizer controller enters the running state, it may take one minute for peripheral devices to complete initialization. Before that, LED indication might be unstable.

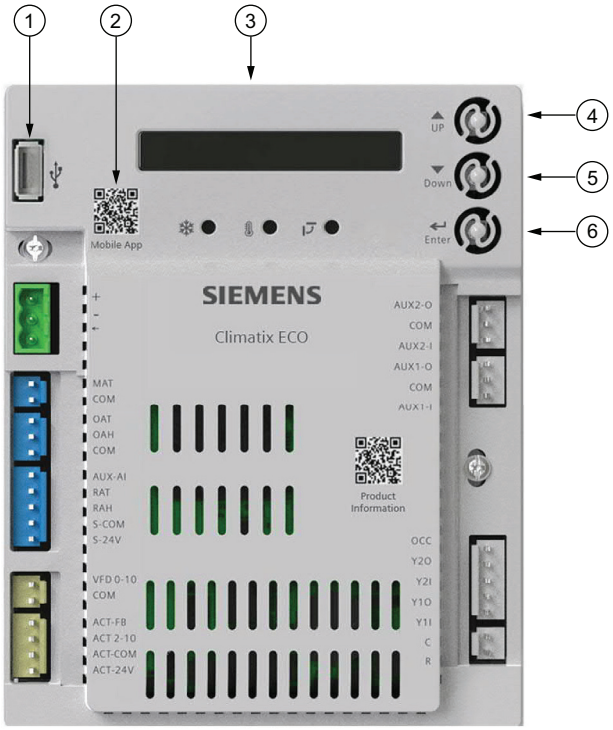


NOTE: QR codes in this image are for reference only.

| NO. | DESCRIPTION |
|---|---|
| 1 | USB port for Wi-Fi/WLAN stick. |
| 2 | QR code to download Climatix™ mobile application. |
| 3 | One-line LCD. After a period of inactivity, the controller displays the default:<br>HMI screen (free cooling status, 1FREECOOL YES or 1FREECOOL NO) |
| 4 | Operation button (Up button) - Move to the previous value, step or category. |
| 5 | Operation button (Down button) - Move to the next value, step or category. |
| 6 | Operation button (Enter button):<br>• Press to edit the current value or option.<br>• Press to confirm a newly selected value or option.<br>• Press Enter + Up to jump up one entire category.<br>• Press Enter + Down to jump down one entire category. |

**Fig. 53 — POL224 Controller**

NOTE: QR codes in this image are for reference only.

**Fig. 54 — Wi-Fi/WLAN Stick**

1. Third-party trademarks and logos are the property of their respective owners.

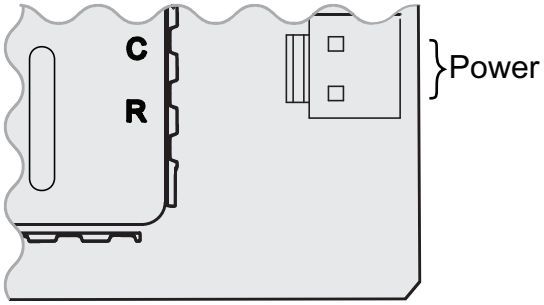


**Fig. 55 — Powering the EconomizerONE Controller**

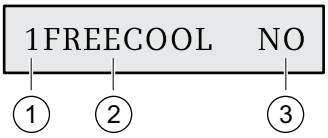


| No. | Description |
|---|---|
| 1 | Number representing the first-level menu of **Status Display**. Different numbers represent different menus:<br>1: Status Display<br>2: Basic Settings<br>3: Advanced Settings<br>4: Alarms<br>5: Enter Configuration State and Reset<br>6: I/O Config<br>7: Testing<br>8: Enter Running State |
| 2 | Submenu* |
| 3 | Value of the current submenu* |

*See "Setup and Configuration" on page 43 for detailed submenus together with possible values or ranges.

**Fig. 56 — Menu Structure Descriptions**

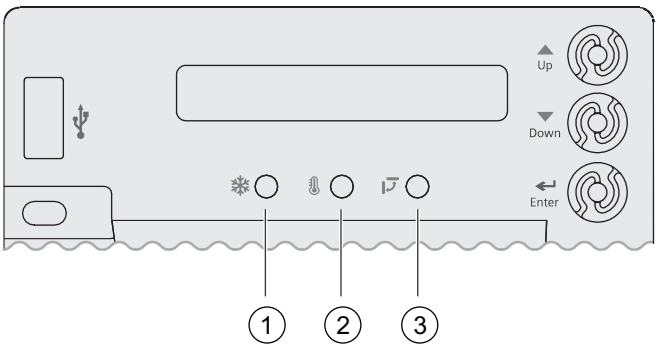


| NO. | DESCRIPTION |
|---|---|
| 1 | Free Cooling LED |
| 2 | Sensor LED |
| 3 | DAC LED |

**Fig. 57 — LED Indication**

**Table 14 — LED Indication**

| STATUS | FREE COOLING LED | SENSOR LED | DAC LED |
|---|---|---|---|
| **Commissioning mode** | Yellow Blinking | Yellow Blinking | Yellow Blinking |
| **Power start up** | Yellow On | Yellow On | Yellow On |
| **Free cooling is running** | Green On | — | — |
| **Free cooling is available but not running** | Green Blinking | — | — |
| **Not economizing when it should** | Red Blinking | — | — |
| **Economizing when it should not** | Red On | — | — |
| **Sensor working okay** | — | Green On | — |
| **Humidity sensor error** | — | Yellow On | — |
| **$CO_2$ sensor error** | — | LED Off | — |
| **Air temperature fault/failure** | — | Red On | — |
| **Excess outdoor air** | — | Red Blinking | — |
| **Damper working okay** | — | — | Green On |
| **Damper not modulating** | — | — | Red On |
| **Damper slippage** | — | — | Red Blinking |
| **Damper unplugged** | — | — | Fast Red Blinking |
| **Terminal ACT-FB is configured but no available feedback signal** | — | — | LED Off |

### *Functions*

Free Cooling Economizing

Free cooling uses unconditioned outside air to cool the space directly. The economizer controller enables or disables free cooling after it judges which control mode is active. It also uses hysteresis to ensure a smooth switchover.

Depending on the sensors that are used, there are four different control modes. In different control modes, the assessed conditions are different. See Table 15.

Default Hysteresis Setting

Hysteresis setting (DB) defaults to 2°F (–17°C). See Fig. 58.

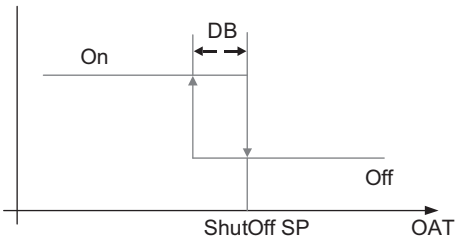


LEGEND
**OAT** — Outside Air Temperature
**DB** — Deadband
**SP** — Set Point

**Fig. 58 — Hysteresis Settings**

## Table 15 — Free Cooling Functions

| CONTROL MODE | SENSORS USED | ENABLE FREE COOLING? |
|---|---|---|
| **Control Mode 1**<br>• Fixed Dry bulb | OA (outside air) temperature sensor<br>and<br>MA (Mixed Air) temperature sensor | The outside air dry bulb temperature is compared with the set temperature shutoff setpoint.<br>If the outside air dry bulb temperature is below the temperature shutoff setpoint, then the outside air is used to meet all or part of the cooling demand. |
| **Control Mode 2**<br>• Differential Dry bulb (Dual Dry bulbs) | OA temperature sensor, RA (Return Air) temperature sensor and MA temperature sensor | The outside-air dry bulb temperature is compared with the return air dry bulb temperature.<br>If both OAT and RAT are higher than the temperature high limitation, then free cooling is prohibited.<br>If OAT or RAT is lower than the temperature high limitation and the outside air dry bulb temperature is lower than the return air dry-bulb temperature, then the outside air is used to meet all or part of the cooling demand. |
| **Control Mode 3**<br>• Combination Fixed Enthalpy and Fixed Dry bulb Control | OA temperature and humidity sensor, and MA temperature sensor | The outside air dry bulb temperature and enthalpy are compared with the set temperature and enthalpy shutoff setpoints.<br>If the outside air enthalpy is lower than the set enthalpy shutoff setpoint, and the outside air dry bulb temperature is lower than the temperature shutoff setpoint, then the outside air can be used for economizing. |
| **Control Mode 4**<br>• Combination of Differential Enthalpy and Fixed Dry bulb | OA temperature and humidity sensor, RA temperature and humidity sensor,<br>and MA temperature sensor | The outside air dry bulb temperature and enthalpy are compared with the temperature shutoff setpoint and return air enthalpy.<br>If both OA enthalpy and RA enthalpy are higher than the enthalpy high limitation, then free cooling is prohibited.<br>If OA enthalpy or RA enthalpy is lower than the enthalpy high limitation, outside air enthalpy is lower than the return-air enthalpy, and the outside air dry bulb temperature is lower than the set temperature shutoff setpoint, then outside air can be used for economizing. |

Damper Modulation During Free Cooling

Once outside air is suitable for free cooling, the controller modulates the damper based on MAT (mixed air temperature, default) or OAT (outside air temperature). Refer to Table 15.

If MAT is used when free cooling is enabled, MAT setpoint (**3MAT SET**, configurable in "Parameter Settings — Advanced" on page 46) is used for MAT modulating. When MAT falls below the anti-freeze setpoint (**3FRZ PROT**), the damper either fully closes or opens to the minimum position (configurable in "Parameter Settings — Advanced" on page 46).

1. If MAT is lower than MAT setpoint, then the damper is modulated to maintain MAT setpoint, towards fully closed or open to the minimum position based on occupancy status if MAT continues dropping.
2. If MAT is in the range [MAT setpoint, (MAT setpoint + neutral zone band [1°F by default])], then the damper position does not change.
3. If MAT is higher than (MAT setpoint + neutral zone band), then the damper opens towards fully open.
4. If MAT is 10°F higher than MAT setpoint, then the damper fully opens to 100%.

If OAT is used when there is a cooling demand, the damper can be opened to different positions depending on different outside air temperatures:

1. If outside air is higher than 50°F but lower than the temperature shutoff setpoint, then the damper is fully open.
2. If outside air is higher than OAT lockout setpoint but lower than 50°F, then linear modulation is applied when only Cooling Stage 1 input (Y1I) is ON. Result of the following formula indicates the damper's open position:

   ([OAT - OAT Lockout Setpoint] / [50 - OAT Lockout Setpoint]) * (80% - MIN POS) + MIN POS

   NOTE: When both free cooling and mechanical cooling are on, damper remains fully open regardless of the modulating logic.

Location-Based Shutoff Setpoints

The economizer controller can get location-based temperature and enthalpy shutoff setpoints automatically if it is connected to the Climatix™ mobile application. Once a Wi-Fi/WLAN stick is plugged in, the economizer controller can establish network connection with the mobile application. The temperature and enthalpy shutoff setpoints obtained via the phone or tablet's GPS functionality can then be synchronized to the economizer controller.

Cooling Stage Operation

The economizer controller accepts inputs for 1 and 2-stage cooling inputs and reroutes to the RTU through the relay connection Y1 and Y2.

The operation of the cooling stages is determined by the availability of Free Cooling provided by the economizer operation mode. See Cooling Stage I/O Logic Tables 16-17. Based on the use of Free Cooling, the operating modes are as follows:

- Y1 is Stage 1 Cooling Demand.
- Y2 is Stage 2 Cooling Demand.
- Free Cooling is always the first cooling stage.
- Cooling Stage 1 call from the Commercial Thermostat (Y1) energizes the Y1 input to the economizer controller.
- Cooling Stage 2 call from the Commercial Thermostat (Y2) energizes the Y2 input to the economizer controller.

### Table 16 — 1 and 2-Stage Cooling Stage I/O Logic

| ECONOMIZER CONDITION MET | Y1 | Y2 | COOLING STAGE 1 | COOLING STAGE 2 |
|---|---|---|---|---|
| **NO** | On | On | On | On |
| **NO** | On | Off | On | Off |
| **NO** | Off | Off | Off | Off |
| **YES** | On | On | On | On/Off[a] |
| **YES** | On | Off | Off | Off |
| **YES** | Off | Off | Off | Off |

NOTE(S):

a. If OAT ≤ MAT setpoint (3MAT SET), then Relay 2 is always **OFF** to disable Cooling Stage 2. Otherwise, if both stages of cooling (Y1 and Y2) are **ON** for more than a set time (15 minutes by default), Y2 remains ON, and the OAT is higher than MAT setpoint, then Relay 2 energizes to allow Y2 pass-through to enable Cooling Stage 2.

### Table 17 — 2-Stage Cooling Stage I/O Logic

| ECONOMIZER CONDITION MET | Y1 | Y2 | COOLING STAGE 1 | COOLING STAGE 2 |
|---|---|---|---|---|
| **NO** | On | On | On | On |
| **NO** | On | On | On | On |
| **NO** | On | Off | On | Off |
| **NO** | Off | Off | Off | Off |
| **YES** | On | On | On | On |
| **YES** | On | On | On | On/Off |
| **YES** | On | Off | Off | Off |
| **YES** | Off | Off | Off | Off |

IMPORTANT: The economizer controller can tolerate thermostat wiring mismatch, e.g. Thermostat Y1 → Economizer Y2-In, Thermostat Y2 → Economizer Y1-In. The handling logic is Stage =Y1I + Y2I. For example, Y1O =1 if Stage > =1, Y2O =1 if Stage > = 2.

Multi-Speed Fan Support

The economizer controller supports connection to 2-speed fans. When the unit is equipped with a multi-speed fan, the damper responds to multiple fan speeds via multiple minimum positions **(MIN POS)** to keep minimum airflow. See Tables 18-20.

### Table 18 — Damper MIN POS for 2-Speed Fan[a]

| Y1 | Y2 | W1 OR O/B | SPD L | SPD H | POS L | POS H |
|---|---|---|---|---|---|---|
| **X** | **—** | — | X | — | X | — |
| **X** | **X** | — | — | X | — | X |
| **—** | **—** | X | — | X | — | X |

NOTE(S):

a. A multi-speed fan is not controlled by the economizer controller but by an external logic board.

LEGEND

**POS L** — Damper MIN POS for Low-Speed Fan
**POS H** — Damper MIN POS for High-Speed Fan
**SPD L** — Low-Speed (Fan)
**SPD H** — High-Speed (Fan)

### Table 19 — Different Fan Speeds with Different Configured Outputs[a]

| FAN TYPE | 1-SPEED COOLING[b] | 2-STAGE COOLING[b] |
|---|---|---|
| **1-SPEED FAN[c]** | • Spd H (regardless of cooling demand, OCC=Yes) | • Spd H (regardless of cooling demand, OCC=Yes) |
| **2-SPEED FAN[c]** | • Spd L (0 or 1 cooling demand)<br>• Spd H (2 cooling demands) | • Spd L (0 or 1 cooling demand)<br>• Spd H (2 cooling demands) |

NOTE(S):

a. If a single-speed fan connects to the Controller, it opens directly on the call of cooling/heating. The damper position is Pos H.
b. Configured by Y1O or Y2O.
c. Configured by 6FAN.

LEGEND

**Spd L** — Low Speed (Fan)
**Spd H** — High Speed (Fan)

### Table 20 — Different Damper Minimum Positions with Different Configured Outputs

| FAN TYPE | 1-SPEED COOLING[a] | 2-STAGE COOLING[b] |
|---|---|---|
| **1-SPEED FAN[b]** | • Pos H (regardless of cooling demand, OCC=Yes) | • Pos H (regardless of cooling demand, OCC=Yes) |
| **2-SPEED FAN[b]** | • Pos H (regardless of cooling demand, OCC=Yes) | • Pos L (0 or 1 cooling demand)<br>• Pos H (2 cooling demands) |

NOTE(S):

a. Configured by Y1O or Y2O.
b. Configured by 6FAN.

LEGEND

**Pos L** — Damper MIN POS for Low-Speed Fan
**Pos H** — Damper MIN POS for High-Speed Fan

If DCV (demand controlled ventilation) is enabled, each fan speed corresponds to two damper position ventilation setpoints (VENT MIN, VENT MAX), e.g., Pos L corresponds to 2VENTMIN L... 2VENTMAX L. See Table 21 for Different Damper Position Setting with Different Configured Outputs with DCV enabled.

If $CO_2$ sensor is connected but DCV is disabled, then each fan speed corresponds to one minimum damper position ventilation setpoint. See Table 22 for Different Damper Position Setting with Different Configured Outputs with DCV disabled.

**Table 21 — Different Damper Position Settings with Different Configured Outputs (DCV is Enabled)**

| FAN TYPE | 1-STAGE COOLING[a] | 2-STAGE COOLING[a] |
|---|---|---|
| **1-SPEED FAN[b]** | • 2VENTMIN H to 2VENTMAX H (regardless of cooling demand, OCC=Yes) | • 2VENTMIN H to 2VENTMAX H (regardless of cooling demand, OCC=Yes) |
| **2-SPEED FAN[b]** | • 2VENTMIN H to 2VENTMAX H (regardless of cooling demand, OCC=Yes) | • 2VENTMIN L to 2VENTMAXL (0 or 1 cooling demand)<br>• 2VENTMIN H to 2VENTMAX H (2 cooling demands) |

NOTE(S):

a. Configured by Y1O or Y2O.
b. Configured by 6FAN.

**Table 22 — Different Damper Position Settings with Different Configured Outputs (DCV is Disabled, $CO_2$ sensor is connected)**

| FAN TYPE | 1-STAGE COOLING[a] | 2-STAGE COOLING[a] |
|---|---|---|
| **1-SPEED FAN[b]** | • 2VENTMIN H (regardless of cooling demand, OCC=Yes) | • 2VENTMIN H (regardless of cooling demand, OCC=Yes) |
| **2-SPEED FAN[b]** | • 2VENTMIN H (regardless of cooling demand, OCC=Yes) | • 2VENTMIN L (0 or 1 cooling demand)<br>• 2VENTMIN H (2 cooling demands) |

NOTE(S):

a. Configured by Y1O or Y2O.
b. Configured by 6FAN.

Cooling Delay via Increasing Fan Speed

If there is cooling demand while outside air is suitable for economizing, then the economizer controller tries to increase fan speed to maximize the use of outside air first. If the cooling demand is not reached within a set time, then mechanical cooling will be enabled.

Typical field application:

1. Prerequisites:
   - Outside air is suitable for economizing and free cooling is ON.
   - Fan connected to the controller supports multiple speeds. Cooling delay function does not work if only a one-speed fan is connected to the controller.
2. If it is a 2-speed fan and there are two cooling demand inputs/outputs and Y1-Input is called, then the controller sets fan speed to Speed Low. Damper is fully open (100%).

   If Y2-Input is also called, then the controller increases fan speed to Speed High and starts fan delay (2FAN DLY) time. After the delay time runs out, the controller starts Y1-Output.

Demand Controlled Ventilation (DCV)

If a field-installed $CO_2$ sensor is connected to the EconomizerONE controller, then a demand controlled ventilation strategy will operate automatically. As the $CO_2$ level in the space increases above the setpoint (on the EconomizerONE controller), the minimum position of the dampers will be increased proportionally until the Maximum Ventilation setting is reached. As the space $CO_2$ level decreases because of the increase in fresh air, the outdoor damper will follow the higher demand condition from the DCV mode or from the free cooling mode.

The controller modulates the outside air damper based on the $CO_2$ level through the ppm value selected between the range of 500 and 2000 ppm. The measured $CO_2$ concentration value is compared with the set DCV setpoint. If the measured $CO_2$ concentration value is below the DCV setpoint, then keep the damper to the minimum position. Otherwise, enable DCV. Once DCV is enabled, the DCV PID starts to run to control the indoor $CO_2$ concentration value towards the DCV setpoint. The damper opens to the maximum position.

NOTE: DCV is disabled if the controller receives no occupancy signal.

DCV operation is available in Occupied and Unoccupied periods with the EconomizerONE system. However, a control modification will be required on the unit system to implement the Unoccupied period function. Refer to controller accessory installation instruction manual for further controls and command operation information.

High Humidity Limitation

The economizer controller applies high limit of humidity to enthalpy-based economizing. When the OA dew point is below the dew point setpoint, enthalpy-based economizing is available. Otherwise, enthalpy-based economizing is unavailable.

Anti-Freeze Protection

The economizer controller initiates the anti-freeze protection if MAT or OAT temperature falls below the anti-freeze setpoint.

MAT-Based Anti-Freeze Protection

1. If MAT temperature falls below the anti-freeze setpoint (3FRZ PROT), then:
   - The controller closes both damper and compressor if unit type is conventional unit and cooling/heating conventional operation mode is enabled.
   - The controller closes the damper if unit type is heat pump and heat pump operation mode is enabled.
2. If the MAT sensor fails, MAT is substituted by OAT to continue the anti-freeze assessment. If OAT fails too, the controller closes the damper immediately.

OAT-Based Anti-Freeze Protection

If OAT temperature falls below the OAT lockout setpoint (3OAT LOCK):

1. The controller stops the compressor from running if unit type is conventional unit and cooling/heating conventional operation mode is enabled.
2. The controller compressor is bypassed if unit type is heat pump and heat pump operation mode is enabled.

Exhaust Fan Operation

Up to two exhaust fans can be connected to the economizer controller.

- If Exhaust Fan 1 is connected and configured, then Exhaust Fan 1 parameter group (L, M and H) is available, depending on fan configuration.
- If Exhaust Fan 2 is connected and configured, then Exhaust Fan 2 parameter group (L, M and H) is available, depending on fan configuration.
- The controller energizes Exhaust Fan Relay 1 and Exhaust Fan Relay 2 if the damper position reaches Exhaust Fan 1 parameter setting and Exhaust Fan Relay 2 parameter setting respectively. The selection of L, M, or H matches the current fan speed.

NOTE: If terminal ACT-FB is configured, then the damper position is the damper feedback position. If feedback signal is unavailable, it is the simulated position.

Occupancy Input

The economizer controller can receive an occupancy signal from the connected thermostat or work under Occupied mode all the time. This is configurable in the Thermostat setup from the Climatix™ mobile application or under the I/O Configuration menu on the inbuilt display. See "Parameter Settings — I/O Configurations" on page 46 for more information.

IMPORTANT: On the call of cooling, when the controller is configured to receive signal from the thermostat but the thermostat is working under the Unoccupied mode, the damper is fully closed if outside air is not suitable for economizing. If outside air is suitable for economizing, the damper is fully open.

Pre-occupancy Purge

The pre-occupancy purge demand comes from the configuration of the Auxiliary features in the Climatix™ mobile application or 6AUX2-I under the I/O Configuration menu on the inbuilt display.

During pre-occupancy purge on the call of heating or when there is no cooling/heating demand, the damper position is MIN POS.

During pre-occupancy purge on the call of cooling, the damper position is MIN POS if outside air is not suitable for economizing. If outside air is suitable for economizing, then the damper is fully open.

Airflow Commissioning

Airflow measurement station (differential pressure signal) can connect to the controller temporarily to run airflow commissioning to calculate, calibrate, and store 4 fan speed characteristic curves automatically at damper positions 40%, 60%, 80%, and 100%. The controller places the damper to a proper position to meet minimum or any other airflow requests in cfm. Users can enable this function only from the Climatix™ mobile application if the related function is available in the current mobile application version.

Fault Detection and Diagnostics

The economizer controller can detect and diagnose free cooling faults, sensor operation faults, and damper modulating faults. It can also report anti-freeze and shutdown notifications and actuator errors. Following is a list of all detectable or reportable information:

- Sensor disconnected or has no signal.
- Sensor short or high signal (under range or over range).
- Not economizing.
- Unexpected economizing.
- Excess outdoor air.
- Damper not modulating.
- Input power monitor and brownout. After detecting brownout, the economizer controller enters the brownout protection mode and disables all of the relay outputs.
- Anti-freeze notifications.
- Shutdown notifications.
- Actuator errors.
- Too low or too high leaving air temperature.
- Cooling/heating error.
- Damper actuator cycle count. Parameter **1ACT CNT** indicates number of times actuator has cycled. It is resettable via HMI item **8ACT CNT RESET**.

IMPORTANT: The first 6 faults are detectable via LEDs or alarm reports on the LCD. See LED Indication on page 34 and Alarms on page 47 for fault indications. These faults can also be displayed in the Operating section of the Climatix™ mobile application.

Firmware Update

NOTE: Back up configurations before firmware update. All the previous configuration data are erased after firmware update. NOTE: Contact Application Engineering for more information on support for firmware.

IMPORTANT: If the controller enters the configuration state for the convenience of I/O configurations, then users can manually switch to the running state after finishing configurations. To do so, press Enter + Up at the same time, and then press Enter to confirm the switch after 8RUN STATE appears on the LCD.

**⚠ WARNING**

Failure to follow this caution may result in damage to equipment. Be sure to allow enough time for compressor startup and shutdown between checkout tests so that the compressors do not short-cycle.

***Mounting Devices Connected to the Economizer Controller***

Devices like damper actuators, sensors (temperature sensor, humidity sensor, combination temperature and humidity sensor, $CO_2$ sensor), thermostats, and exhaust fans can be connected to the economizer controller. For information on how to mount the devices, see the device's installation instructions. See Fig. 59 and Table 23 for economizer controller wiring details.

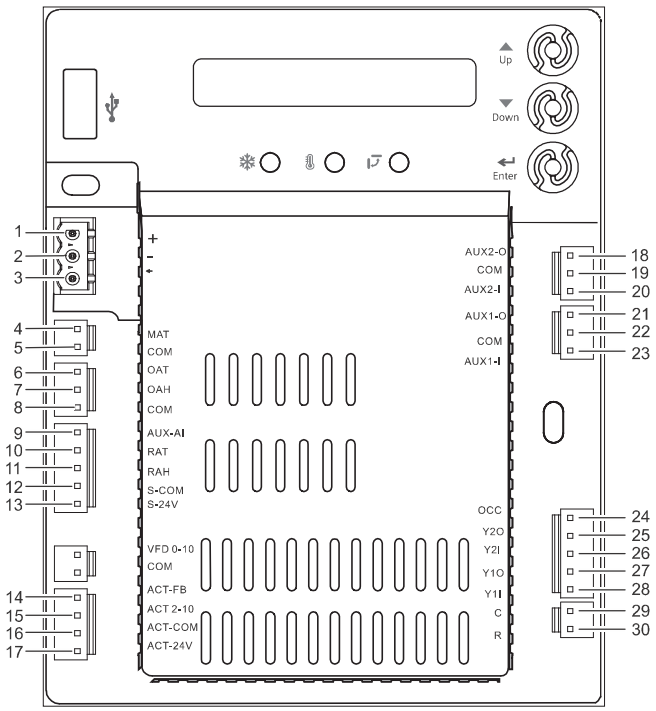


**Fig. 59 — EconomizerONE Control Wiring**

## Table 23 — EconomizerONE Control Wiring Settings

| NO. | LABEL | TYPE | DESCRIPTION |
|---|---|---|---|
| **1** | + | RS485 Modbus A | Line A |
| **2** | - | RS485 Modbus B | Line B |
| **3** | ¬ | GND_ISO | Earth Ground |
| **4** | MAT | Type II NTC 10K or 0-10 vdc | Mixed or Discharge Air Temperature Sensor |
| **5** | COM | COM | Mixed or Discharge Air Temperature Sensor Common |
| **6** | OAT | Type II NTC 10K or 0-10 vdc | Outside Air Temperature Sensor |
| **7** | OAH | 0-10 vdc or 4-20mA | Outside Air Relative Humidity Sensor |
| **8** | COM | COM | Outside Air Temperature Sensor or<br>Outside Air Relative Humidity Sensor Common |
| **9** | AUX-AI | 0-10 vdc, 2-10 vdc or 0-5 vdc | Air Quality Sensor or Pressure Sensor |
| **10** | RAT | Type II NTC 10K or 0-10 vdc | Return Air Temperature Sensor |
| **11** | RAH | 0-10 vdc or 4-20mA | Return Air Relative Humidity Sensor |
| **12** | S-COM | COM | 24 vac Common |
| **13** | S-24V | 24 vac | 24 vac Power Out to Sensors |
| **14** | ACT-FB | 2-10 vdc | Damper Actuator Feedback |
| **15** | ACT2-10 | 2-10 vdc | Damper Actuator Output |
| **16** | ACT-COM | COM | Damper Actuator Output Common |
| **17** | ACT-24V | 24 vac | 24 vac Power Out to Damper Actuator |
| **18** | AUX2-O | 24 vac OUT | Configurable:<br>• Exhaust Fan (1 or 2)<br>• System Alarm output (Title 24) |
| **19** | COM | COM | 24 vac Common |
| **20** | AUX2-I | 24 vac IN | Configurable:<br>• Shut Down<br>• Heat Conventional (W1)<br>• Heat Pump Changeover (reversing valve OB)<br>• Pre-occupancy |
| **21** | AUX1-O | 24 vac OUT | Configurable:<br>• Exhaust Fan (1 or 2)<br>• System Alarm output (Title 24) |
| **22** | COM | COM | 24 vac Common |
| **23** | AUX1-I | 24 vac IN | Configurable:<br>• Shut Down<br>• Heat Conventional (W1)<br>• Heat Pump Changeover (reversing valve OB)<br>• Pre-occupancy |
| **24** | OCC | 24 vac IN | Occupancy Input |
| **25** | Y2O | 24 vac OUT | Cooling Stage 2 Output to Stage 2 Mechanical Cooling |
| **26** | Y2I | 24 vac IN | Cooling Stage 2 Input from Commercial Thermostat |
| **27** | Y1O | 24 vac OUT | Cooling Stage 1 Output to Stage 1 Mechanical Cooling |
| **28** | Y1I | 24 vac IN | Cooling Stage 1 Input from Commercial Thermostat |
| **29** | C | COM | 24 vac Common |
| **30** | R | 24 vac | 24 vac Power |

***Connecting Peripheral Devices to the Economizer Controller***

See Fig. 60-64 for wiring details.

- Outside Air: Connect to the OAT and COM terminals of the device.
- Return Air (Differential): Connect to the RAT and S-COM terminals of the device.
- Mixed Air: Connect to the MAT and COM terminals of the device.

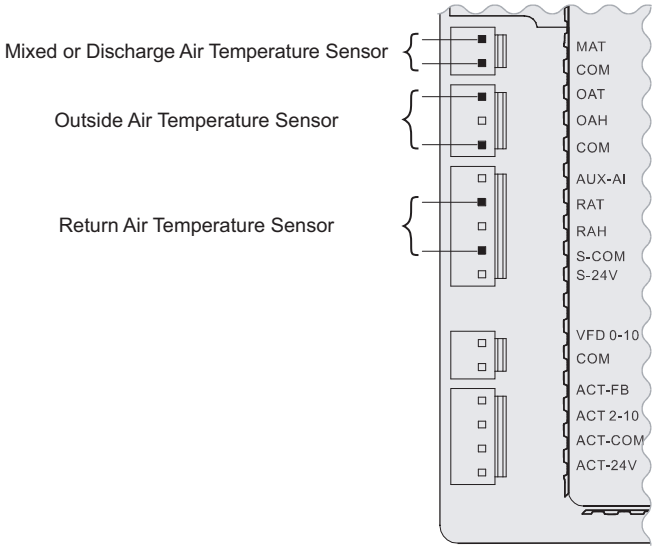


**Fig. 60 — Temperature Sensor Connection**

- Outside Air Relative Humidity: Connect to the OAH and COM terminals of the device.
- Return Air Relative Humidity: Connect to the RAH and S-COM terminals of the device.

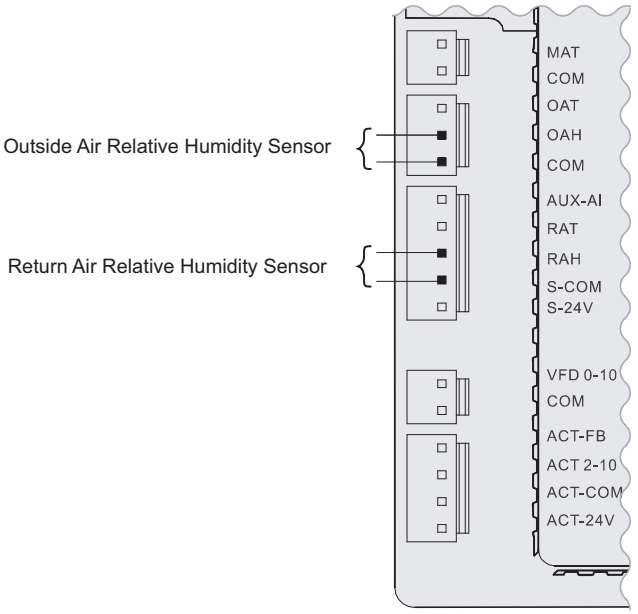


**Fig. 61 — Relative Humidity Sensor Connection**

- Outside Combination Temperature/ Humidity: Connect to the OAT, COM, and OAH terminals of the device.
- Return Combination Temperature/ Humidity: Connect to the RAT, S-COM, and RAH terminals of the device.

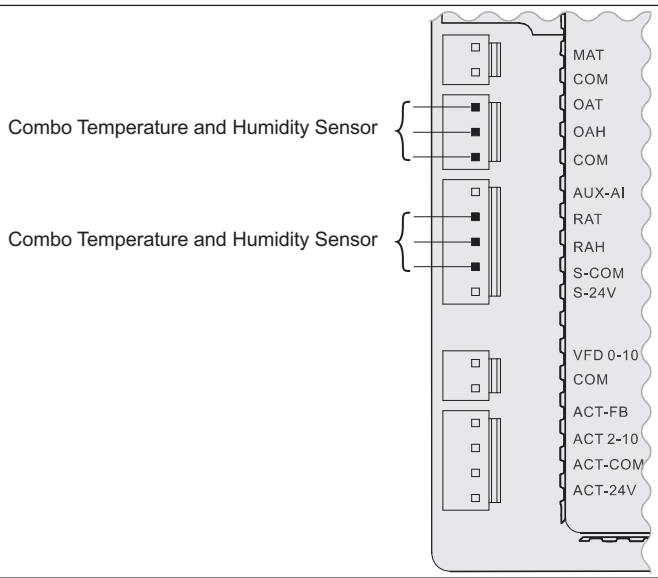


**Fig. 62 — Combination Temperature/Humidity Sensor Connection**

- Connect to the AUX-AI, S-COM, and S-24V terminals of the device.

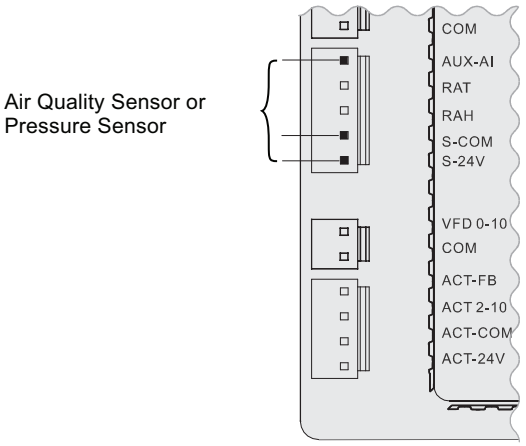


**Fig. 63 — $CO_2$/Pressure Sensor Connection**

- Connect to the ACT 2-10, ACT-COM, and ACT-24V terminals of the device.

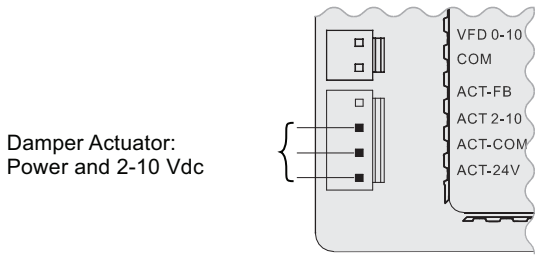


**Fig. 64 — Damper Actuator Connection**

## SETUP AND CONFIGURATION

IMPORTANT: Before setup and configuration, it is recommended to obtain some location-based values, such as shutoff points, or utilize the location services in the Climatix™ mobile application.

Set up and configure the economizer controller before putting it into usage. This can be accomplished by using the Climatix™ mobile application or the inbuilt display. After sensor, compressor, thermostat, or actuator is connected to the economizer controller, values/statuses are displayed in the Operating section of the mobile application and on the LCD. Users can manually change basic and advanced settings, configure I/Os, and test the damper operation and any configured outputs by modifying the corresponding parameter values in the local device or mobile application. See Tables 24-31 for complete list of all parameters available on the LCD display. Refer to it during the setup and configuration process.

NOTE: For all units, the Climatix application login is: **Administrator**. For units coming from the factory with $CO_2$ configuration or single enthalpy (control mode 3), the controller password is OneBT2.1. For all other units, use the controller password OneBT.

NOTE: Parameters and display menus may display differently/dynamically if different applications are configured. See Tables 24-31.

IMPORTANT: Not all operations are available on the local POL224. For example, users can only obtain shutoff setpoints and perform cfm commissioning via the Climatix™ mobile application. Setup and configuration on the local device are only recommended if operations from the mobile application are unavailable. Check the mobile application for all operations that can be performed from the mobile application end.

IMPORTANT: By connecting the RS485 port to a PC, all parameters are also readable or writable from PC tools such as Modbus Poll.exe via Modbus®[a] and Yabe.exe via BACnet™[a] MSTP (Bps 38400 [default], Bps 9600, Bps 19200, Bps 115200). Note that an external End of Line (EOL) element is required to achieve Baud Rate 115200 at a maximum cable length of 4000 ft (1.2 km).

NOTE(S):

a. Third-party trademarks and logos are the property of their respective owners.

## Table 24 — Status Display

| PARAMETER | DESCRIPTION | VALUE |
|---|---|---|
| **1FREECOOL** | Indicates whether the system can use outdoor air for free cooling. | YES<br>NO |
| **1ECON ENAB** | Indicates whether outdoor air is being used for the first stage of cooling. | |
| **1OCCUPIED** | Indicates whether the space is occupied. If users choose **ALWAYS** for **6OCC** when configuring I/Os, then the parameter value is **YES**; if users keep the default selection **T-STAT** for **6OCC** and the controller receives 24-v signal from OCC input, then the value is **YES**. Otherwise, the value is **NO**. | |
| **1Y1-IN** | Y1-In call from thermostat for Cooling Stage 1. | ON<br>OFF |
| **1Y1-OUT** | Y1-Out signal to compressor for Cooling Stage 1. | |
| **1Y2-IN** | Y2-In call from thermostat for Cooling Stage 2. | |
| **1Y2-OUT** | Y2-Out signal to compressor for Cooling Stage 2.<br>**Dynamic item:** Appears only if Y2-Out terminal is configured. | |
| **1AUX1-I** | Aux1-In signal<br>**Dynamic item:** Appears only if Aux1-In terminal is configured. | |
| **1AUX1-O** | Aux1-Out signal<br>**Dynamic item:** Appears only if Aux1-Out terminal is configured. | |
| **1AUX2-I** | Aux2-In signal<br>**Dynamic item:** Appears only if Aux2-In terminal is configured. | |
| **1AUX2-O** | Aux2-Out signal<br>**Dynamic item:** Appears only if Aux2-Out terminal is configured. | |
| **1COMP STAGE** | Indicates compressor current stage. | Off<br>1<br>2<br>3 |
| **1HEAT ENAB** | Indicates whether heating is enabled. | YES<br>NO |
| **1MIX AIR LOW** | Indicates whether the anti-freeze protection function is enabled for a mixed air temperature sensor. If the detected air temperature is lower than the anti-freeze protection setpoint (3FRZ PROT), then the parameter value is **YES**. Otherwise, it is **NO**. | |
| **1MAT PRES** | Indicates the present value of the mixed air temperature (MAT) sensor.<br>**Dynamic item:** Appears only if **MAT** or **AUTO** is selected for **3DIF T LOC** under Parameter Settings — Advanced on page 46. | The corresponding detected value is displayed on the LCD. |
| **1LAT PRES** | Indicates the present value of the leaving air temperature (LAT) sensor.<br>**Dynamic item:** Appears only if **LAT** or **AUTO** is selected for **3DIF T LOC**. | |
| **1OAT PRES** | Indicates the present value of the outdoor air temperature (OAT) sensor.<br>**Dynamic item:** Appears only if an OAT sensor is configured. | |
| **1OAH PRES** | Indicates the present value of the outdoor air relative humidity (OAH) sensor.<br>**Dynamic item:** Appears only if an OAH sensor is configured. | |
| **1RAT PRES** | Indicates the present value of the return air temperature (RAT) sensor.<br>**Dynamic item:** Appears only if a RAT sensor is configured. | |
| **1RAH PRES** | Indicates the present value of the return air relative humidity (RAH) sensor.<br>**Dynamic item:** Appears only if a RAH sensor is configured. | |
| **1CO2 PRES** | Indicates the present value of the $CO_2$ sensor.<br>**Dynamic item:** Appears only if a $CO_2$ sensor is configured. | |
| **1DCV STATUS** | Indicates the demand controlled ventilation (DCV) status.<br>**Dynamic item:** Appears only if a $CO_2$ sensor is configured.<br>Displays ON if the measured $CO_2$ concentration value is above the DCV setpoint and OFF if below the DCV setpoint. | ON<br>OFF |
| **1FAN SPD LV** | Indicates the current fan speed status (low, medium, or high). If a one-speed fan is connected and configured, then this item is invisible.<br>**Dynamic item:** Appears only if "**6FAN**" is configured as "**2SPEED**" under Parameter Settings — I/O Configurations on page 46. | L<br>H |
| **1ACT OUT** | Indicates current position of damper actuator in V. | The corresponding detected value is displayed on the LCD. |
| **1ACT FB** | Indicates feedback signal of damper actuator in V. | |
| **1ACT POS** | Indicates current position of damper actuator in % Open. | |
| **1ACT CNT** | Indicates number of times actuator has cycled (1 cycle = 180 degrees of movement in any direction). Resettable via HMI item **8ACT CNT RESET** under Enter Running State on page 48. | |
| **1EQUIP** | Indicates the equipment type. If **HP(O)** or **HP(B)** is chosen for **6AUX1-I**, then the parameter value is **HP(O)** or **HP(B)** respectively. If neither is chosen, then the value is **CON RTU**. | HP(O)<br>HP(B)<br>CON RTU |
| **1OAT LOCK** | Indicates status of the OAT cooling lockout function. | NO<br>LCKOUT<br>OVRD |
| **1INS** | Indicates the installation date of the economizer controller. If the installation date is incorrect, press Enter to change and confirm month, date, and year. | — |

## Table 25 — Parameter Settings — Basic

| PARAMETER | DESCRIPTION | RANGE | DEFAULT |
|---|---|---|---|
| **2 TEMP OFF** | Temperature shutoff setpoint can be obtained automatically if a smartphone or tablet with the mobile application installed on it is connected to the network provided by a Wi-Fi/WLAN stick plugged into the economizer controller. This can also be a manually defined setpoint. | 48...80°F; increment by 1 | 63°F |
| **2ENTH OFF** | Enthalpy shutoff setpoint can be obtained automatically if a smartphone or tablet with the mobile application installed on it is connected to the network provided by a Wi-Fi/WLAN stick plugged into the economizer controller. This can also be a manually defined setpoint.<br>**Dynamic item:** Appears only if an OAH sensor is configured. | 22...30 Btu/lbm; increment by 1 | 28 Btu/lbm |
| **2DVC** | Demand controlled ventilation setpoint can be obtained automatically if a smartphone or tablet with the mobile application installed on it is connected to the network provided by a Wi-Fi/WLAN stick plugged into the economizer controller. This can also be a manually defined setpoint.<br>**Dynamic item:** Appears only if a $CO_2$ sensor is configured. | 300...2000PPM; increment by 100 | 1100PPM |
| **2FAN L ACT** | Damper minimum position when fan runs at a low speed.<br>**Dynamic item:** Appears only if "**6FAN**" is configured as "**2SPEED**" under Parameter Settings — I/O Configurations on page 46. | 2...10V; increment by 0.1 | 3.6V |
| **2FAN H ACT** | Damper minimum position when fan runs at a high speed.<br>**Dynamic item:** Appears only if "**6FAN**" is configured as "**1SPEED**" or "**2SPEED**". | 2...10V; increment by 0.1 | 2.8V |
| **2VENTMAX L** | DCV maximum position when fan runs at a low speed.<br>**Dynamic item:** Appears only if a $CO_2$ sensor is configured and "**6FAN**" is configured as "**2SPEED**". | 2...10V; increment by 0.1 | 3.6V |
| **2VENTMAX H** | DCV maximum position when fan runs at a high speed.<br>**Dynamic item:** Appears only if a $CO_2$ sensor is configured and "**6FAN**" is configured as "**1SPEED**" or "**2SPEED**". | 2...10V; increment by 0.1 | 3.6V |
| **2VENTMIN L** | DCV minimum position when fan runs at a low speed.<br>**Dynamic item:** Appears only if a $CO_2$ sensor is configured and "**6FAN**" is configured as "**2SPEED**". | 2...10V; increment by 0.1 | 3.1V |
| **2VENTMIN H** | DCV minimum position when fan runs at a high speed.<br>**Dynamic item:** Appears only if a $CO_2$ sensor is configured and "**6FAN**" is configured as "**1SPEED**" or "**2SPEED**". | 2...10V; increment by 0.1 | 2.3V |
| **CFM COMM** | Air Flow Chart: **CFM commissioning** can only be initiated from the mobile application. When **CFM commissioning** is in progress, the local device reads "**CFM COMM**". | — | — |
| **2DEGREES** | Temperature unit (°F or °C). | — | °F |
| **2FAN** | Fan cfm. | 100...50,000cfm; increment by 100 | 5000cfm |
| **2EX1 L** | Exhaust Fan 1 low-speed parameter setting.<br>**Dynamic item:** Appears only if:<br>• Exhaust Fan 1 is configured.<br>• "**6FAN**" is configured as "**2SPEED**". | 0...100%; increment by 1 | 65% |
| **2EX1 H** | Exhaust Fan 1 high-speed parameter setting.<br>**Dynamic item:** Appears only if:<br>• Exhaust Fan 1 is configured.<br>• "**6FAN**" is configured as "**1SPEED**" or "**2SPEED**". | 0...100%; increment by 1 | 50% |
| **2EX2 L** | Exhaust Fan 2 low-speed parameter setting.<br>**Dynamic item:** Appears only if:<br>• Exhaust Fan 2 is configured.<br>• "**6FAN**" is configured as "**2SPEED**". | 0...100% | 80% |
| **2EX2 H** | Exhaust Fan 2 high-speed parameter setting.<br>**Dynamic item:** Appears only if:<br>• Exhaust Fan 2 is configured.<br>• "**6FAN**" is configured as "**1SPEED**" or "**2SPEED**". | 0...100%; increment by 1 | 75% |
| **2THL** | Temperature high limitation.<br>**Dynamic item:** Appears only if an RAT sensor is configured. | 0...100%; increment by 1 | 83% |
| **2EHL** | Enthalpy high limitation.<br>**Dynamic item:** Appears only if an RAH sensor is configured. | 30...50 Btu/lbm; increment by 1 | 33 Btu/lbm |
| **2FAN DLY** | Cooling delay via increasing fan speed. | 0...30 min; increment by 1 | 5 min. |

## Table 26 — Parameter Settings — Advanced

| PARAMETER | DESCRIPTION | VALUE/RANGE | DEFAULT |
|---|---|---|---|
| **3FREEZE POS** | Anti-freeze protection damper position (closed or minimum). | CLO<br>MIN | CLO |
| **3SD ACT POS** | Damper position during shutdown (open or closed). | CLO<br>OPN | CLO |
| **3DIF T LOC** | MAT sensor location:<br>• Choose **MAT** if the sensor is installed before the DX (Direct Expansion) coil.<br>• Choose **LAT** if the sensor is installed after the DX coil.<br>• Choose **AUTO** to let the economizer controller automatically detect the location. | MAT<br>LAT<br>AUTO | LAT |
| **3LAT LOW** | Low limit of leaving air temperature.<br>**Dynamic item:** Appears only if **LAT** or **AUTO** is selected for **3DIF T LOC**. | 35...65°F; increment by 1 | 45°F |
| **3LAT HIGH** | High limit of leaving air temperature.<br>**Dynamic item:** Appears only if **LAT** or **AUTO** is selected for **3DIF T LOC**. | 70...180°F; increment by 1 | 80°F |
| **3OAT CAL** | OAT sensor calibration. | –2.5...2.5°F; increment by 0.5 | 0°F |
| **3RAT CAL** | RAT sensor calibration.<br>**Dynamic item:** Appears only if an RAT sensor is configured. | –2.5...2.5°F; increment by 0.5 | — |
| **3OAH CAL** | OAH sensor calibration.<br>**Dynamic item:** Appears only if an OAH sensor is configured. | –10...10%; increment by 0.5 | 0% |
| **3RAH CAL** | RAH sensor calibration.<br>**Dynamic item:** Appears only if an RAH sensor is configured. | | |
| **3MAT CAL** | MAT or LAT sensor calibration. | –2.5...2.5°F; increment by 0.5 | 0°F |
| **3MAT SET** | Setpoint of MAT or LAT sensor. | 38...70°F; increment by 1 | 53°F |
| **3FRZ PROT** | Anti-freeze protection setpoint of MAT sensor. | 35...55°F; increment by 1 | 45°F |
| **3ACT TOLR** | Actuator tolerance setpoint between output (in percent) and feedback (in percent). | 0...15%; increment by 1 | 8% |
| **3OAT LOCK** | OAT lockout set point for anti-freeze protection. | –45...80°F; increment by 1 | 32°F |
| **3OAT LCKOVRD** | When OAT LOCKOUT is enabled, choose to override the cooling lockout function or not. | YES<br>NO | NO |
| **3OAT LOCKODLY** | Indicates the overridden time if "**YES**" is selected for "**3OAT LCKOVRD**". | 0...300 min; increment by 1 | 45 min. |

## Table 27 — Parameter Settings — I/O Configurations

| PARAMETER | DESCRIPTION | VALUE | DEFAULT |
|---|---|---|---|
| **6OCC** | Configures whether occupancy status receives signal from the connected thermostat or is displayed as ALWAYS in the economizer controller. | T-STAT<br>ALWAYS | T-STAT |
| **6AUX1-I** | Auxiliary DI-1. Configurable as:<br>• None<br>• Heat Conventional (W1) from thermostat<br>• Heat pump (reversing valve O)<br>• Heat pump (reversing valve B)<br>• Pre-occupancy signal from thermostat<br>• Shutdown signal from unit | NONE<br>HP(O)<br>HP(B)<br>PREOCC<br>SHUTDWN | W1 |
| **6AUX2-I** | Auxiliary DI-2. Configurable as:<br>• None<br>• Heat stage 1 (W1) from thermostat<br>• Heat pump (reversing valve O)<br>• Heat pump (reversing valve B)<br>• Pre-occupancy signal from thermostat<br>• Shutdown signal from unit<br>**NOTE:** Whichever is chosen for 6AUX1-I does not appear in the list of 6AUX2-I. | NONE<br>W1<br>HP(O)<br>HP(B)<br>PREOCC<br>SHUTDWN | NONE |
| **6OAT SIG** | Configures signal type of OAT sensor. | 0-10V<br>NTC10K | NTC10K |
| **6RAT SIG** | Configures signal type of RAT sensor. | 0-10V<br>NTC10K<br>NONE | NONE |
| **6OAH SIG** | Configures signal type of OAH sensor. | 0-10V<br>4-20mA<br>NONE | NONE |
| **6RAH SIG** | Configures signal type of RAH sensor. | | |
| **6MAT SIG** | Configures signal type of MAT or LAT sensor. | 0-10V<br>NTC10K | NTC10K |
| **6AUX-AI1** | Auxiliary AI-1. Configurable as:<br>• $CO_2$ sensor<br>• Static pressure (temporarily for cfm commissioning) sensor<br>• None | PRESSURE<br>CO2<br>NONE | NONE |
| **6X-AI1 SIG** | Configures CO2 sensor type.<br>**Dynamic item**: Appears only if "**CO2**" is selected for "**6AUX-AI1**". | 0-10V<br>2-10V<br>0-5V | 0-10V |
| **6CO2 Rng L** | Configures the low limit of CO2 measuring range.<br>**Dynamic item**: Appears only if "**CO2**" is selected for "**6AUX-AI1**". | 0...500; increment by 10 | 0 |
| **6C02 Rng H** | Configures the high limit of CO2 measuring range.<br>**Dynamic item**: Appears only if "**CO2**" is selected for "**6AUX-AI1**". | 1000...3000;<br>increment by 50 | 2000 |
| **6AUX-AI2** | Choose **ACT FB** if feedback signal is available from the connected damper actuator. Otherwise, choose **NONE**. | ACT FB<br>NONE | ACT FB |

## Table 27 — Parameter Settings — I/O Configurations (cont)

| PARAMETER | DESCRIPTION | VALUE | DEFAULT |
|---|---|---|---|
| **6Y2O** | Choose "**COOL 2**" if Cooling Stage 2 is available (another compressor is connected to the Economizer). Otherwise, choose "**NONE**". | COOL 2<br>NONE | COOL 2 |
| **6AUX1-O** | Auxiliary DO-1. Configurable as:<br>• None.<br>• Exhaust fan (1 or 2).<br>• Alarm output to thermostat (Title 24). | NONE<br>ALARM<br>EXHAUST | EXHAUST |
| **6AUX2-O** | Auxiliary DO-2. Configurable as:<br>• None.<br>• Exhaust fan (1 or 2).<br>• Alarm output to thermostat (Title 24).<br>**NOTE:** Except for Exhaust Fan, whichever is chosen for 6AUX1-O does not appear in the list of 6AUX2-O. | NONE<br>ALARM<br>EXHAUST | ALARM |
| **6RS485** | Switch between MSTP and Modbus. | MSTP<br>MODBUSSLV | MSTP |

## Table 28 — Alarm Parameters[a,b]

| PARAMETER | DESCRIPTION |
|---|---|
| **NO ALARM** | No alarm is activated. |
| **4MAT SEN ALARM** | MAT sensor has failed, gone out of range, or become disconnected. |
| **4CO2 SEN ALARM** | $CO_2$ sensor has failed, gone out of range, or become disconnected. |
| **4OAT SEN ALARM** | OAT sensor has failed, gone out of range, or become disconnected. |
| **4OAH SEN ALARM** | OAH sensor has failed, gone out of range, or become disconnected. |
| **4RAT SEN ALARM** | RAT sensor has failed, gone out of range, or become disconnected. |
| **4RAH SEN ALARM** | RAH sensor has failed, gone out of range, or become disconnected. |
| **4FREEZE ALARM** | Anti-freeze notification when MAT sensor is below anti-freeze protection setpoint. |
| **4RTU SHUTDOWN** | Notification of Shutdown Active when SHUTDWN is chosen for 6AUX1-I or 6AUX2-I. |
| **4ACTUATOR ALARM** | Actuator gets disconnected or has failed. |
| **4ACT UNDER V** | Voltage received by the actuator is below expected range. |
| **4ACT OVER V** | Voltage received by the actuator is above expected range. |
| **4ACT STALLED** | Damper actuator stopped before achieving commanded position. |
| **4ACT SLIPPING** | Damper actuator slips after reaching commanded position. |
| **4NOT ECON** | Not economizing when it should. |
| **4ECON SHOULDNT** | Economizing when it should not. |
| **4EXCESS OA** | Excess outdoor air. Outside air intake is significantly higher than it should be. |
| **4LLA ALARM** | Leaving air temperature is lower than the low limit (3LAT LOW). |
| **4HLA ALARM** | Leaving air temperature is higher than the high limit (3LAT HIGH). |

NOTE(S):

a. All alarms are dynamic items. An alarm appears only if a related symptom mentioned above is detected.
b. An alarm activation triggers a general alarm and then the configured system alarm output (AUX1-O or AUX2-O) is activated. If there is no alarm, then NO ALARM is displayed on the HMI.

## Table 29 — Test Commands

| PARAMETER | DESCRIPTION |
|---|---|
| **7DAMPER MIN POS** | Press Enter to test whether the economizer controller can drive damper to minimum position. |
| **7DAMPER CLOSE** | Press Enter to test whether the economizer controller can drive damper to 100% Closed. |
| **7DAMPER OPEN** | Press Enter to test whether the economizer controller can drive damper to 100% Open. |
| **7DAMPER ALL** | Press Enter to perform all the above tests. |
| **7DAMPER** | Press Enter to test whether the economizer controller can drive damper to the selected voltage. |
| **7Y1O** | Press Enter to test whether the economizer controller can turn on or off the first stage of cooling (close or open relay Y1O). |
| **7Y2O** | Press Enter to test whether the economizer controller can turn on or off the second stage of cooling (close or open relay Y2O). |
| **7AUX1-O** | Press Enter to test AUX1-O connection (close or open relay AUX1-O). |
| **7AUX2-O** | Press Enter to test AUX2-O connection (close or open relay AUX2-O). |

## Table 30 — Enter Running State

| PARAMETER | DESCRIPTION |
|---|---|
| **8RUN STATE** | Change to Running State. Press Enter to confirm the change. |
| **8ENTER RUN?** | Confirm the change to Running State. |
| **8FACTORY DEF** | Perform factory reset. Press Enter to confirm the reset. (This action resets the controller password to default: OneBT.) |
| **8DEF CONFIRM?** | Confirm the factory resetting. |
| **8ACT CNT RESET** | Damper count reset. |
| **8VER x.x.x** | Firmware version information such as 0.1.10. |

## Table 31 — Enter Configuration State and Restart

| PARAMETER | DESCRIPTION |
|---|---|
| **5CONFIG STATE** | Change to Configuration State. Press Enter to confirm the change. |
| **5ENTER CONFIG?** | Confirm the change to Configuration State. |
| **5RESTART** | Restart the economizer controller. Press Enter to confirm the restart. |
| **5CONF RESTART** | Confirm the restart. |

### INSTALLING OPTIONAL HH57LW001 SINGLE OUTSIDE AIR ENTHALPY SENSOR

When using the HH57LW001 enthalpy sensor (see Fig. 65) for outside air changeover, the existing HH79NZ039 dry bulb sensor (see Fig. 66) must be removed. The enthalpy sensor will be mounted in the same location as the dry bulb sensor (see Fig. 67). When the enthalpy sensor's OA (Outside Air) temperature, enthalpy, and dew point are below their respective setpoints, the outside air can be used for free cooling. When any of these are above the setpoint, free cooling will not be available. Enthalpy setpoints are configurable and create an enthalpy boundary according to the user's input. For additional details, see Fig. 68-69 and Table 32.

Harness 48TC005213 is required to be connected between the EconomizerONE harness in the return air chamber. Harness 48TC005213 has a 5-pin plug that connects directly to the HH57LW001 enthalpy sensor.

#### *Enthalpy Control Sensor Configuration*

The optional enthalpy control sensor (P/N: HH57LW001) communicates with the POL224 economizer controller using the 5-wire harness, 48TC005213. The HH57LW001 sensor can be used as a single outside air enthalpy, a differential return enthalpy, or a differential return temperature sensor. Refer to the base unit control wiring diagrams found earlier in this book to wire the HH57LW001 enthalpy sensor for each option. Use Fig. 65 and Table 34 on page 51 to locate the wiring terminals for each enthalpy control sensor.

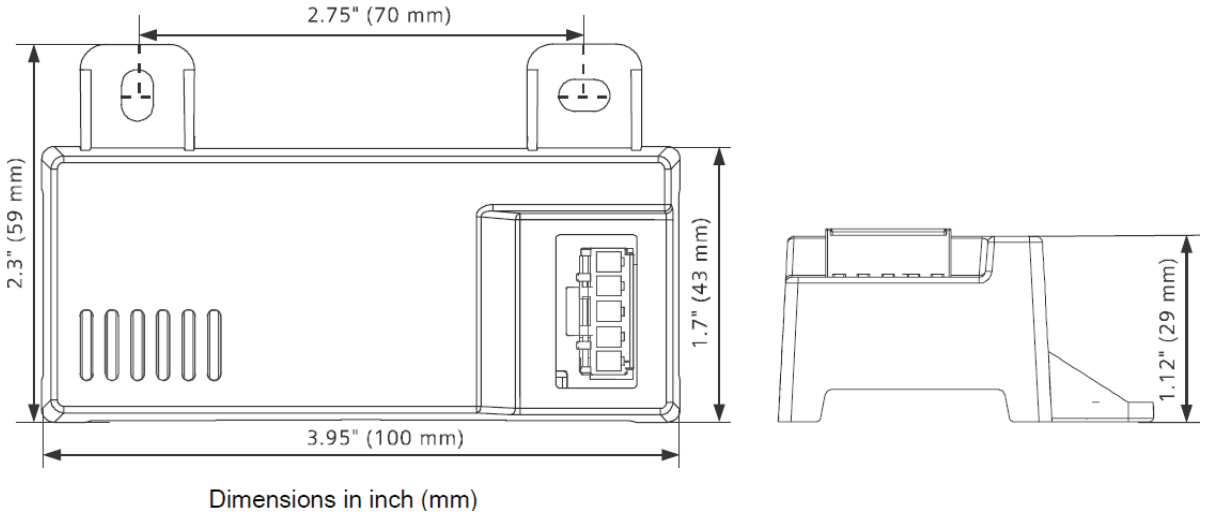


**Fig. 65 — HH57LW001 Dimensional, Connection and Switching Information**

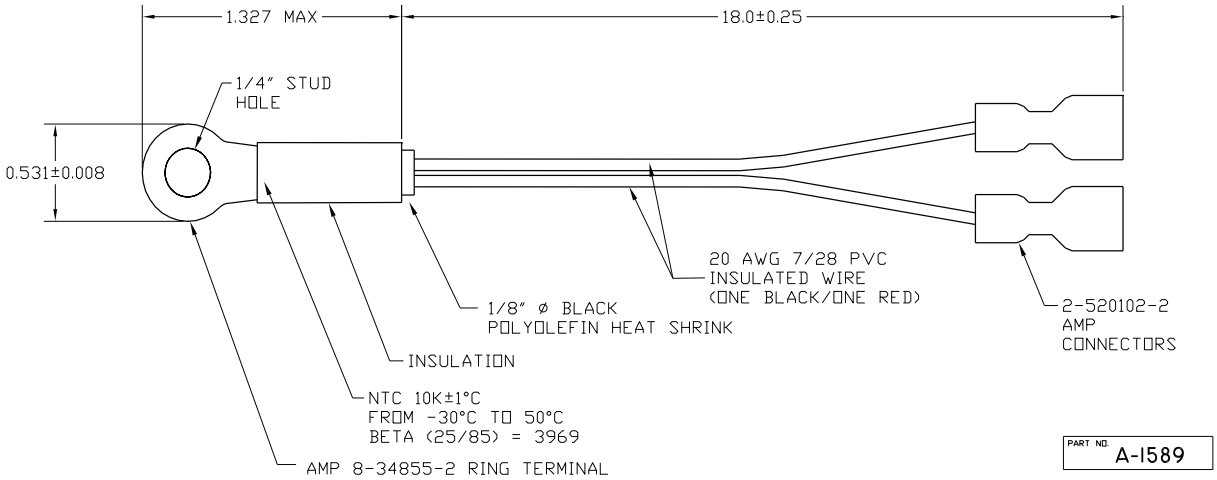


**Fig. 66 — HH79NZ039 Dry Bulb and Mixed Air Sensor Wiring**

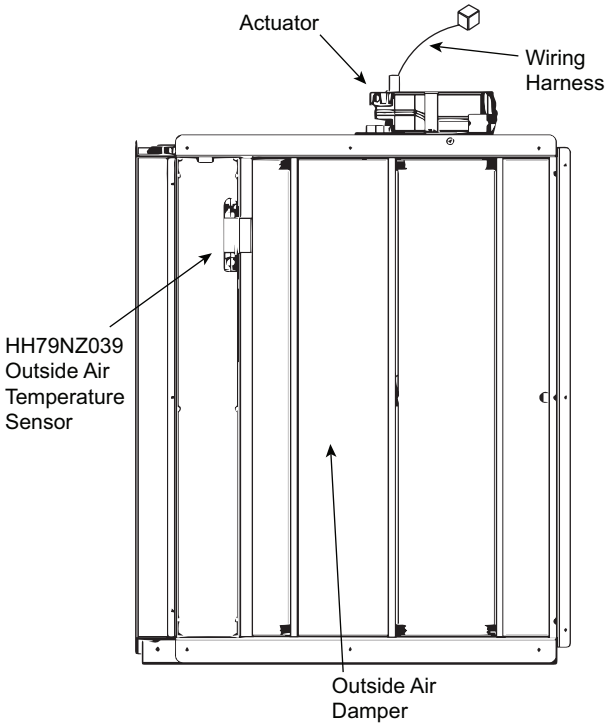


**Fig. 67 — EconomizerONE Component Locations (CRECOMZR108A00 Shown)**

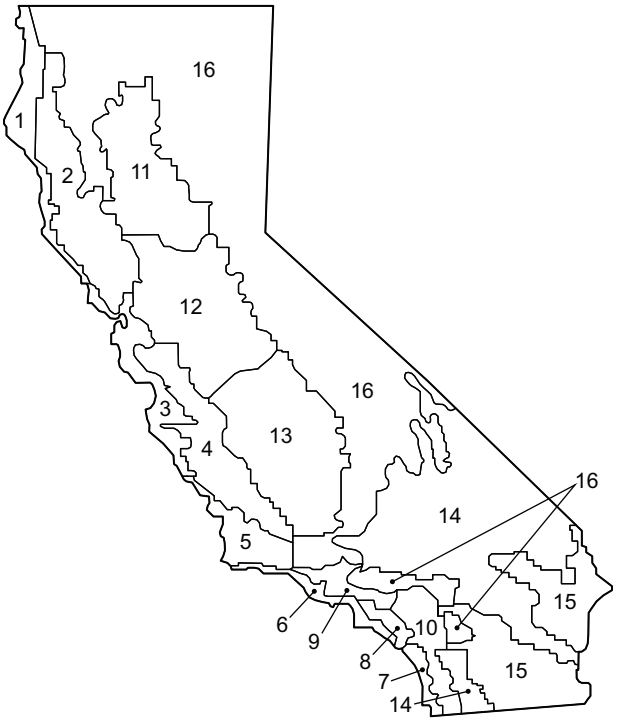


**Fig. 68 — California Title 24 Zones**

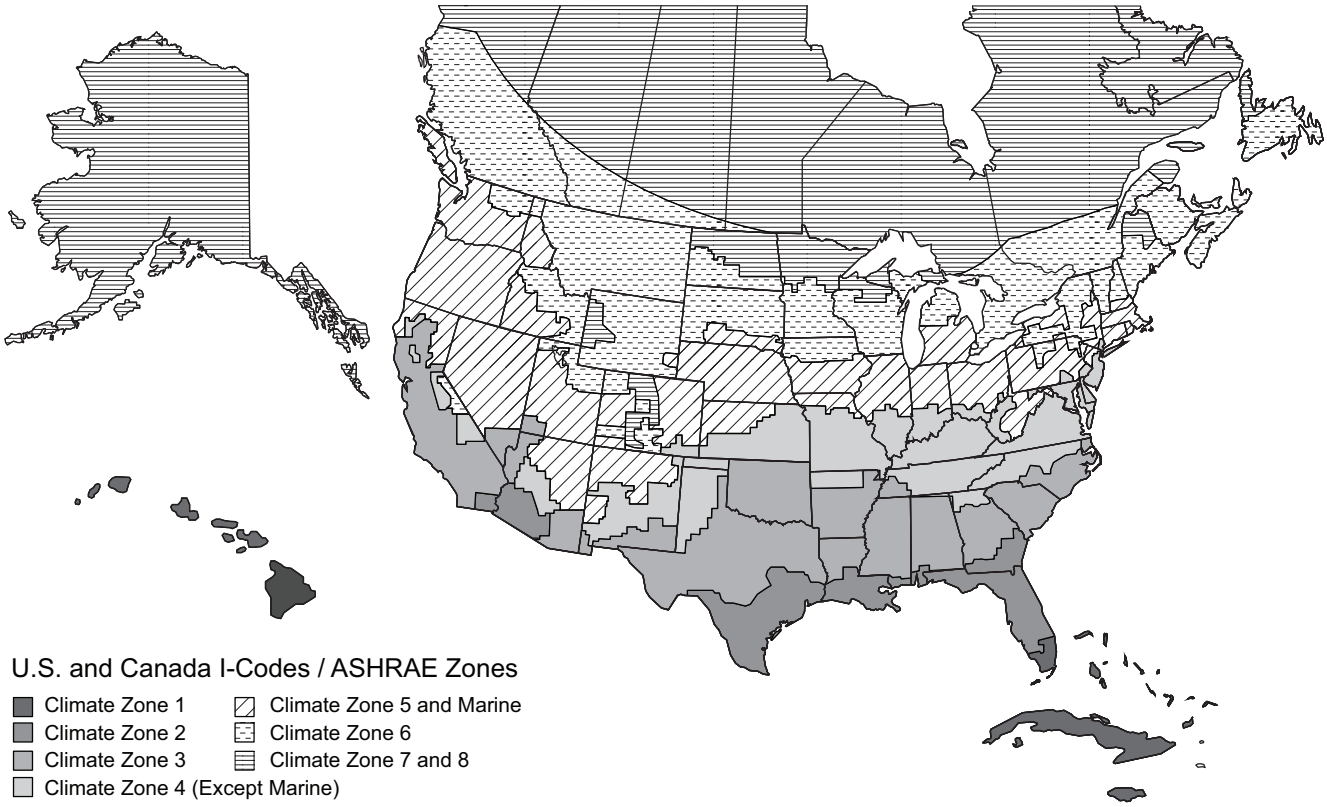


**Fig. 69 — U.S. and Canada Climate Zones**

**Table 32 — Enthalpy Manual Entry Setpoints for EconomizerONE Per Climate Zone**

| CLIMATE ZONES[a] | 2 TEMP OFF | LOWEST SETTING | RH% | 2 ENTH OFF | RH% | 2THL | 2EHL | RH% |
|---|---|---|---|---|---|---|---|---|
| 1 | 65°F | 22 Btu/lbm | 43% | 28 Btu/lbm | 86% | 83°F | 33 Btu/lbm | 48% |
| 2 | 65°F | 22 Btu/lbm | 43% | 28 Btu/lbm | 86% | 83°F | 33 Btu/lbm | 48% |
| 3 | 65°F | 22 Btu/lbm | 43% | 28 Btu/lbm | 86% | 83°F | 33 Btu/lbm | 48% |
| 4 | 65°F | 22 Btu/lbm | 43% | 28 Btu/lbm | 86% | 83°F | 33 Btu/lbm | 48% |
| 5 | 70°F | 22 Btu/lbm | 28% | 28 Btu/lbm | 65% | 83°F | 33 Btu/lbm | 48% |
| 6 | 70°F | 22 Btu/lbm | 28% | 28 Btu/lbm | 65% | 83°F | 33 Btu/lbm | 48% |
| 7 and 8 | 75°F | 22 Btu/lbm | 19% | 28 Btu/lbm | 50% | 83°F | 33 Btu/lbm | 48% |
| **CALIFORNIA TITLE 24 ZONES[b]** | **2 TEMP OFF** | **LOWEST SETTING** | **RH%** | **2 ENTH OFF** | **RH%** | **2THL** | **2EHL** | **RH%** |
| 1 | 75°F | 22 Btu/lbm | 19% | 28 Btu/lbm | 50% | 83°F | 33 Btu/lbm | 48% |
| 2 | 73°F | 22 Btu/lbm | 22% | 28 Btu/lbm | 55% | 83°F | 33 Btu/lbm | 48% |
| 3 | 75°F | 22 Btu/lbm | 19% | 28 Btu/lbm | 55% | 83°F | 33 Btu/lbm | 48% |
| 4 | 73°F | 22 Btu/lbm | 22% | 28 Btu/lbm | 55% | 83°F | 33 Btu/lbm | 48% |
| 5 | 75°F | 22 Btu/lbm | 19% | 28 Btu/lbm | 50% | 83°F | 33 Btu/lbm | 48% |
| 6 | 71°F | 22 Btu/lbm | 28% | 28 Btu/lbm | 62% | 83°F | 33 Btu/lbm | 48% |
| 7 | 69°F | 22 Btu/lbm | 32% | 28 Btu/lbm | 68% | 83°F | 33 Btu/lbm | 48% |
| 8 | 71°F | 22 Btu/lbm | 28% | 28 Btu/lbm | 62% | 83°F | 33 Btu/lbm | 48% |
| 9 | 71°F | 22 Btu/lbm | 28% | 28 Btu/lbm | 62% | 83°F | 33 Btu/lbm | 48% |
| 10 | 73°F | 22 Btu/lbm | 22% | 28 Btu/lbm | 55% | 83°F | 33 Btu/lbm | 48% |
| 11 | 75°F | 22 Btu/lbm | 19% | 28 Btu/lbm | 50% | 83°F | 33 Btu/lbm | 48% |
| 12 | 75°F | 22 Btu/lbm | 19% | 28 Btu/lbm | 50% | 83°F | 33 Btu/lbm | 48% |
| 13 | 75°F | 22 Btu/lbm | 19% | 28 Btu/lbm | 50% | 83°F | 33 Btu/lbm | 48% |
| 14 | 75°F | 22 Btu/lbm | 19% | 28 Btu/lbm | 50% | 83°F | 33 Btu/lbm | 48% |
| 15 | 75°F | 22 Btu/lbm | 19% | 28 Btu/lbm | 50% | 83°F | 33 Btu/lbm | 48% |
| 16 | 75°F | 22 Btu/lbm | 19% | 28 Btu/lbm | 50% | 83°F | 33 Btu/lbm | 48% |
| **CONTROLLER DEFAULT SETTINGS** | **2 TEMP OFF** | **—** | **—** | **2 ENTH OFF** | **—** | **2THL** | **2EHL** | **RH%** |
| **DEFAULT SET POINTS** | 63°F | — | — | 28 Btu/lbm | 94% | 83°F | 33 Btu/lbm | 48% |

NOTE(S):

a. See Fig. 69 for map of U.S. and Canada climate zones.
b. See Fig. 68 for map of California Title 24 zones.

Economizers are shipped standard with an HH79NZ039 outside air dry bulb sensor (see Fig. 66). System default setting (high temp limit) is 63°F (17°C) and has a range of 48°F to 80°F (9°C to 27°C). Sensor is factory installed on economizer.

NOTE: A second HH79NZ039 sensor is provided for mixed air temperature.

NOTE: California high temperature setting requirements by region are shown in Table 33.

Enthalpy Settings (Enthalpy Option)

If installing the optional HH57LW001 enthalpy sensor, the HH79NZ039 dry bulb outside air sensor must first be removed. Wire sensor to harness 48TC005213 and the (5) wires from the harness to the EconomizerONE harness in the return air chamber. Harness 48TC005213 has a 5-pin plug that connects directly to the HH57LW001 enthalpy sensor. Refer to the base unit control wiring diagrams earlier in this book for wiring connections. Refer to Fig. 65 and Table 34.

### *California's Title 24 High Temperature Limit Settings*

California's Title 24 code requires a high temperature limit setting for all dry bulb outside air economizer changeover. The temperatures vary by the region within California. See Table 33 for high limit settings.

**Table 33 — California Title 24 Regional High Limit Dry Bulb Temperature Settings[a]**

| DEVICE TYPE[b] | CLIMATE ZONES | REQUIRED HIGH LIMIT (ECONOMIZER OFF WHEN): DESCRIPTION |
|---|---|---|
| FIXED DRY BULB | 1, 3, 5, 11-16 | OAT exceeds 75°F (23.8°C) |
| | 2, 4, 10 | OAT exceeds 73°F (22.7°C) |
| | 6, 8, 9 | OAT exceeds 71°F (21.6°C) |
| | 7 | OAT exceeds 69°F (20.5°C) |
| DIFFERENTIAL DRY BULB | 1, 3, 5, 11-16 | OAT exceeds RA temperature |
| | 2, 4, 10 | OAT exceeds return air temperature –2°F (–18.8°C) |
| | 6, 8, 9 | OAT exceeds return air temperature –4°F (–20°C) |
| | 7 | OAT exceeds return air temperature –6°F (–21.1°C) |
| FIXED ENTHALPY[c] + FIXED DRY BULB | All | OAT exceeds 28 Btu/lb of dry air[b] or OAT exceeds 75°F (23.8°C) |

NOTE(S):

a. This table sourced from 2019 California Energy Code, Title 24, Part 6, Table 140.4-E Air Economizer High Limit Shut Off Control Requirements.
b. Only the high limit control devices listed are allowed to be used and at the set points listed. Others such as Dew Point, Fixed Enthalpy, Electronic Enthalpy, and Differential Enthalpy Controls, may not be used in any climate zone for compliance with Section 140.4(e)1 unless approval for use is provided by the Energy Commission Executive Director.
c. At altitudes substantially different than sea level, the Fixed Enthalpy limit value shall be set to the enthalpy value at 75°F and 50% relative humidity. As an example, at approximately 6,000 foot elevation, the fixed enthalpy limit is approximately 30.7 Btu/lb.

LEGEND

**OAT** — Outdoor-air Thermostat
**RA** — Return Air

**Table 34 — HH57LW001 Sensor Wiring Terminations**

| TERMINAL NUMBER | TERMINAL LABEL | TYPE | DESCRIPTION |
|---|---|---|---|
| **1** | TCOM | NTC 10k | Outside Air Temperature Sensor Output |
| **2** | TSIG | NTC 10k | Outside Air Temperature Sensor Output |
| **3** | HSIG | 0-10 vdc | Outside Air Relative Humidity Sensor Output |
| **4** | HCOM | COMMON | Sensor 24-v Common Input |
| **5** | H24V | 24 vac | Sensor 24-v Operating Voltage Input |

CHECKOUT

Inspect all wiring connections at the economizer module's terminals, and verify compliance with the installation wiring diagrams. For checkout, review the Status of each configured parameter and perform the Test Commands tests (refer to Table 29).

For information about menu navigation and use of the keypad see Interface Overview on page 33.

**⚠ WARNING**

ELECTRIC SHOCK HAZARD

Failure to follow this warning could result in personal injury, property damage, or death.

Before performing service or maintenance operations on unit, always turn off main power switch to unit and install lock(s) and lockout tag(s). Unit may have more than one power switch. Ensure electrical service to rooftop unit agrees with voltage and amperage listed on the unit rating plate.

If any wiring changes are required, first be sure to remove power from the economizer module before starting work. Pay particular attention to verifying the power connection (24 vac).

***Power Up***

After the POL224 module is mounted and wired, apply power.

Initial Menu Display

On initial start up, "Welcome" displays on the economizer HMI screen. After a brief pause, the Parameter Settings — I/O Configuration (refer to Table 27) of the software appears, allowing the user to check that presets and default values are configured correctly.

***Power Loss (Outage or Brownout)***

All set points and advanced settings are restored after any power loss or interruption.

NOTE: All settings are stored in non-volatile flash memory.

***Status***

Use the Status menu (refer to Table 24) to check the parameter values for the various devices and sensors configured.

NOTE: For information about menu navigation and use of the keypad, see Interface Overview on page 33.

***Checkout Tests***

Use the Test Commands menu (refer to Table 29) to test the damper operation and any configured outputs. Only items that are configured are shown in the Test Commands menu.

NOTE: For information about menu navigation and use of the keypad, see Interface Overview on page 33.

To perform a Test Command test:

1. Scroll to the desired test in Test Command menu 7 using the Up and Down buttons.
2. Press the Enter button to select the item. RUN? appears.
3. Press the Enter button to start the test. The unit pauses and then displays IN PROGRESS. When the test is complete, DONE appears.
4. When all desired parameters have been tested, press Enter + Up to end the test.

The Checkout tests can all be performed at the time of installation or at any time during the operation of the system as a test that the system is operable.

**⚠ CAUTION**

EQUIPMENT DAMAGE HAZARD

Failure to follow this caution may result in equipment damage.

Be sure to allow enough time for compressor start-up and shutdown between checkout tests so that you do not short-cycle the compressors.

TROUBLESHOOTING

For EconomizerONE troubleshooting issues see Table 35.

## Table 35 — Operating Issues and Concerns

| SYMPTOM | REASON | SOLUTION |
|---|---|---|
| **An alarm is displayed on the LCD** | Sensor, damper, or the whole working system may not work properly | Check sensor, damper, or the whole working system following the detailed alarm information. |
| **DAC LED is blinking RED** | Damper slippage | Check whether the damper works properly. |
| **DAC LED is blinking RED quickly** | Damper unplugged | Check whether the damper is connected. |
| **DAC LED is OFF** | Terminal ACT-FB is configured but there is no available feedback signal | Check whether the feedback signal is connected; check if ACT-FB is faulty. |
| **Economizer controller has no alarm, but the Free Cooling LED will not turn on when the OA seems to be suitable for Free Cooling** | Shutoff SP setting error | Shutoff temperature and/or enthalpy set point is incorrectly set up. Consult an HVAC professional to set up the shutoff set point correctly. |
| | OA temp is too low | The OA temperature is too low; therefore, there is no cooling demand. This could possibly enable anti-freeze protection. |
| | OA temp is too high or too humid | In DIFF mode, even though OA temperature is lower than RA temperature, if both OA and RA temperatures exceed the high limit, then Free Cooling turns off.<br>In Differential Enthalpy control mode, even though OA enthalpy is lower than RA enthalpy, if both OA and RA enthalpy exceed the high limit, then Free Cooling turns off. |
| **Economizer controller/mechanical cooling is not operating** | No input power | Use a multi-meter to check whether there is 24 vac ± 25% (18-30 vac) at the POWER terminals. If there is no voltage or if the voltage is significantly low, then check the transformer output voltage at the RTU. If 24-v is not present at the transformer secondary side, then check the primary line voltage to the transformer. If the line voltage is not present at the transformer primary side, then check the primary power to the RTU, fuses, circuit breaker, and so on. |
| | Brownout | If voltage is below 17-v, then the economizer controller may be in Brownout Protection mode. This mode disables all of the relay outputs. When the power is 19 vac or higher, the economizer controller and RTU operate normally. |
| | Y1/Y2 signal is missing from the thermostat | Mechanical cooling does not run until there is cooling demand (Y1/Y2 Active). Check the wiring from Y1I and Y2I terminals to the commercial thermostat. 24-v should be present between Y1I/Y2I and Y1O/Y2O respectively. |
| | 24 vac~ and 24 vac ⊥ are incorrectly wired | 24 vac power supply has polarity when all devices are powered by the same 24 vac transformer; reversing polarity may cause a short circuit that can damage the system.<br>Follow the transformer polarity mark, check the wiring of 24-v~ (or G or 24-v+), and ensure that they are tied to the same polar of 24 vac power supply; while checking the wiring of ⊥ (or G0 or 24-v- or COM), ensure that they are all tied to another polar of 24 vac power supply. |
| **Firmware update failure** | Application file is damaged, operation is incorrect, and/or USB flash disk does not work properly | Reload a BIN file, restart the controller, update firmware[a], or change a USB flash disk. Contact service provider if failure still exists. |
| **Free Cooling LED is solid RED** | Sensor, damper, or whole working system may not work properly | Check sensor, damper, or the whole working system following the detailed alarm information. |
| **Free Cooling LED is blinking RED** | Not economizing when it should | Check the whole economizer working system, such as the sensor, damper, and thermostat. |
| **Incorrect controller password error on mobile application** | For $CO_2$ and single enthalpy (control mode 3) configurations from the factory, the password has changed | For units coming from the factory with $CO_2$ configuration or single enthalpy (control mode 3), use the controller password OneBT2.1.<br>For all other units, use the controller password OneBT.<br>Performing a factory reset on the controller will also reset the password to OneBT. |
| **RS485 communication failure** | RS485 signal or configuration error | Check wiring, configuration, Baud Rate (using mobile application), and other network communication parameters. |
| **Sensor LED is blinking RED** | Excess outdoor air | Check the whole economizer working system, such as the sensor, damper, and thermostat. |
| **Sensor LED is solid RED** | Mixed Air (MA) sensor error | Check the MA sensor. It must be either a Type II NTC 10K or 0-10 vdc sensor. |
| | Outside Air (OA)/Return Air (RA) sensor error | Check the wiring and signal of the OA sensor. If in Differential (DIFF) mode, also check the RA sensor. The following sensor signals are valid:<br>Type II NTC 10K or 0-10 vdc temperature.<br>0-10 vdc or 4-20 mA humidity. |
| | Air temperature failure/fault | Check the air temperature sensor signal. The valid signal must be Type II NTC 10K or 0-10 vdc. |
| **Sensor LED is OFF** | $CO_2$ sensor error | Check $CO_2$ sensor connection, sensor signal (under range or over range), and sensor signal type. |
| **Sensor LED is YELLOW** | Humidity sensor error | Check humidity sensor connection, sensor signal (under range or over range), and sensor signal type. |
| **Wi-Fi connection failure** | Wi-Fi/WLAN stick error or wrong user name and password | Unplug and re-plug in the Wi-Fi/WLAN stick, enter a correct user name and password, restart the controller, or replace the Wi-Fi/WLAN stick. If the Wi-Fi/WLAN stick is POL903.00/100, then the default user name and password are Siemens-WLAN-Stick and SIBPAdmin. DNS name is siemens.wlanstick. Contact Application Engineering for information on this accessory. |

NOTE(S):

a. Back up configurations before firmware update. All the previous configuration data is erased after firmware update. Contact Application Engineering for more information on support for firmware.
IMPORTANT: If the controller enters the configuration state for the convenience of I/O configurations, then users can manually switch to the running state after finishing configurations. To do so, press Enter + Up at the same time, then press Enter to confirm the switch after 8RUN STATE appears on the LCD.

## SystemVu™ Controller (Factory Option)

For details on operating 48FE**08-12 units equipped with the factory-installed SystemVu controller option, refer to the *FE/GE Series Single Package Rooftop Units with SystemVu Controller Controls, Start-up, Operation and Troubleshooting* manual.

SMOKE DETECTORS

Smoke detectors are available as factory-installed options on 48FE models. Smoke detectors may be specified for supply air only, for return air without or with economizer, or in combination of supply air and return air. All components necessary for operation are factory-provided and mounted. The unit is factory-configured for immediate smoke detector shutdown operation; additional wiring or modifications to unit terminal board may be necessary to complete the unit and smoke detector configuration to meet project requirements.

Units equipped with factory-optional return-air smoke detectors require a relocation of the sensor module at unit installation. See Fig. 70 for the as-shipped location.

COMPLETING INSTALLATION OF RETURN-AIR SMOKE SENSOR

1. Unscrew the two screws holding the return-air smoke detector assembly. See Fig. 71, Step 1.
2. Save the screws.
3. Turn the assembly 90 degrees and then rotate end to end. Make sure that the elbow fitting is pointing down. See Fig. 71, Step 2.
4. Screw the sensor and detector plate into its operating position using screws from Step 1. See Fig. 71, Step 3.
5. Connect the flexible tube on the sampling inlet to the sampling tube on the basepan.

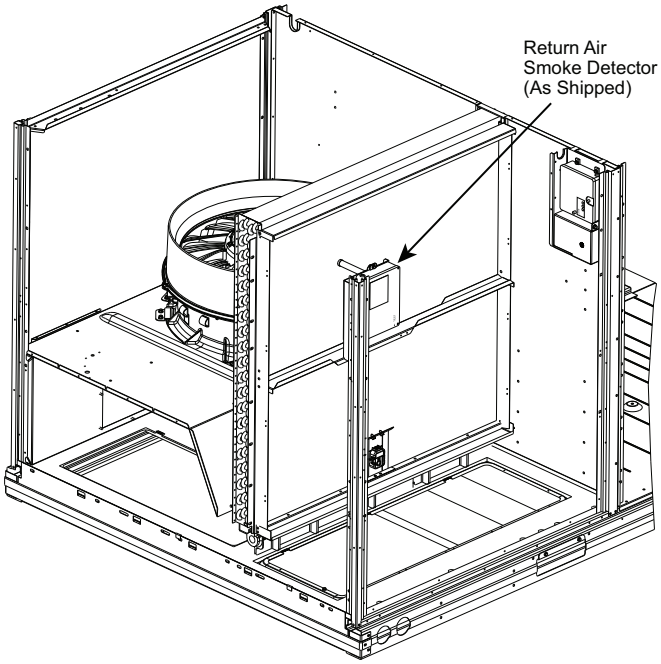


**Fig. 70 — Return Air Smoke Detector; Shipping Position**

ADDITIONAL APPLICATION DATA

Refer to the application data sheet titled "*Factory-Installed Smoke Detector, for Small and Medium Rooftop Units 2 to 25 Tons*" for discussions on additional control features of these smoke detectors including multiple unit coordination.

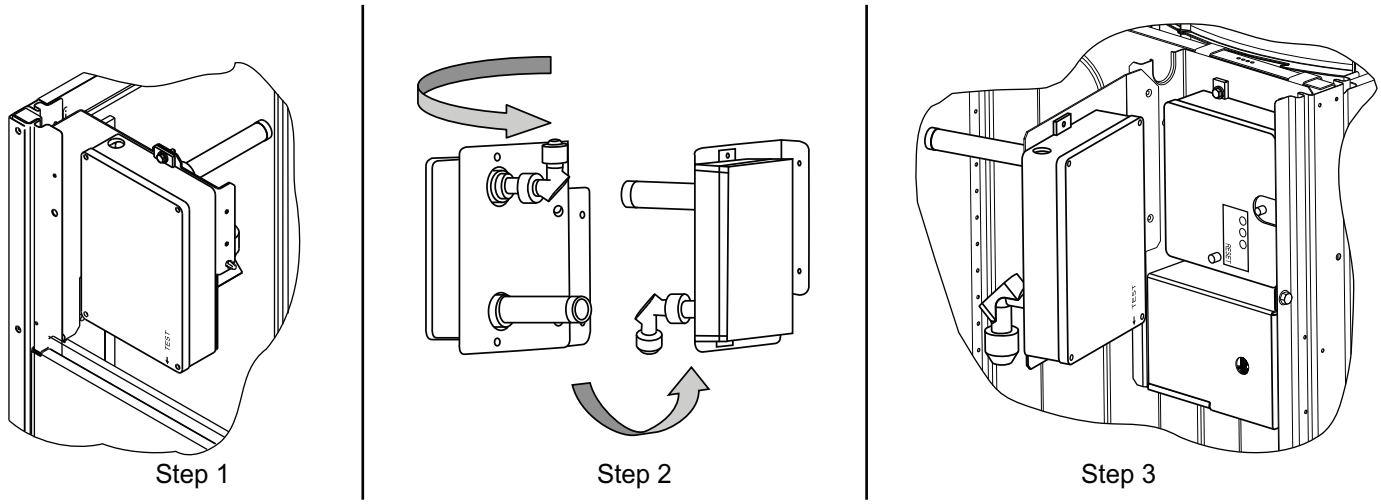


**Fig. 71 — Completing Installation of Return Air Smoke Sensor**

## Step 13 — Adjust Factory-Installed Options

SMOKE DETECTORS

Smoke detector(s) will be connected at the Unit Control Board (UCB), at terminals marked “Smoke Shutdown.”

ECONOMIZERONE OCCUPANCY SWITCH

If external occupancy control is desired, connect a time clock or remotely controlled switch (closed for Occupied, open for Unoccupied sequence) at terminals marked OCCUPANCY. Detach the jumper covering the “Occupancy” terminals on the UCB and then attach the required connections.

## Step 14 — Install Accessories

Available accessories include:

- Roof curb
- Thru-base connection kit (must be installed before unit is set on curb)
- LP conversion kit
- Flue discharge deflector
- Manual outside air damper
- EconomizerONE (with POL224 control)
- Power exhaust
- Differential dry-bulb sensor (EconomizerONE)
- Outdoor enthalpy sensor
- Differential enthalpy sensor
- $CO_2$ sensor
- Louvered hail guard
- Low ambient kit
- Phase monitor control

Refer to separate installation instructions for information on installing these accessories.

## Step 15 — Fan Speed Set Up

UNITS WITH ELECTRO-MECHANICAL CONTROLS

The fan speed set up controls are located on the lower section of the Unit Control Board (UCB). See Fig. 72.

1. Check the job specifications for the cfm (cubic feet per minute) and ESP (external static pressure) required.
2. Using the chart on the Fan Speed Set Up labels (see Fig. 73), calculate the vdc from the cfm and ESP for the base unit. Then add vdc for any accessories installed per the “Field Accessories” section of the label.

   NOTE: The Fan Speed Set Up labels are located on the High Voltage cover in the Control Box.
3. Connect a multimeter to the vdc terminals on the UCB.
4. Set the Range Switch to either A, B, or C per the Switch Range table.
5. Using a straight blade screwdriver, turn the vdc control dial to fine tune the vdc reading.
6. Record the reading in the Field Setting field.

NOTE: Fan set-up vdc is not affected by the operating stage of the unit.

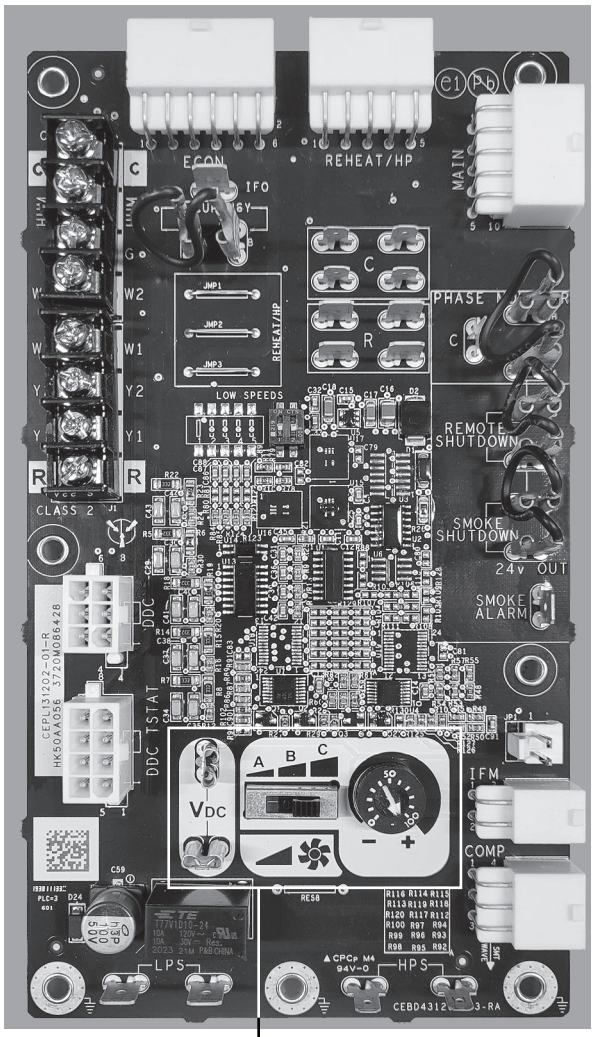


**Fig. 72 — UCB Fan Speed Controls**

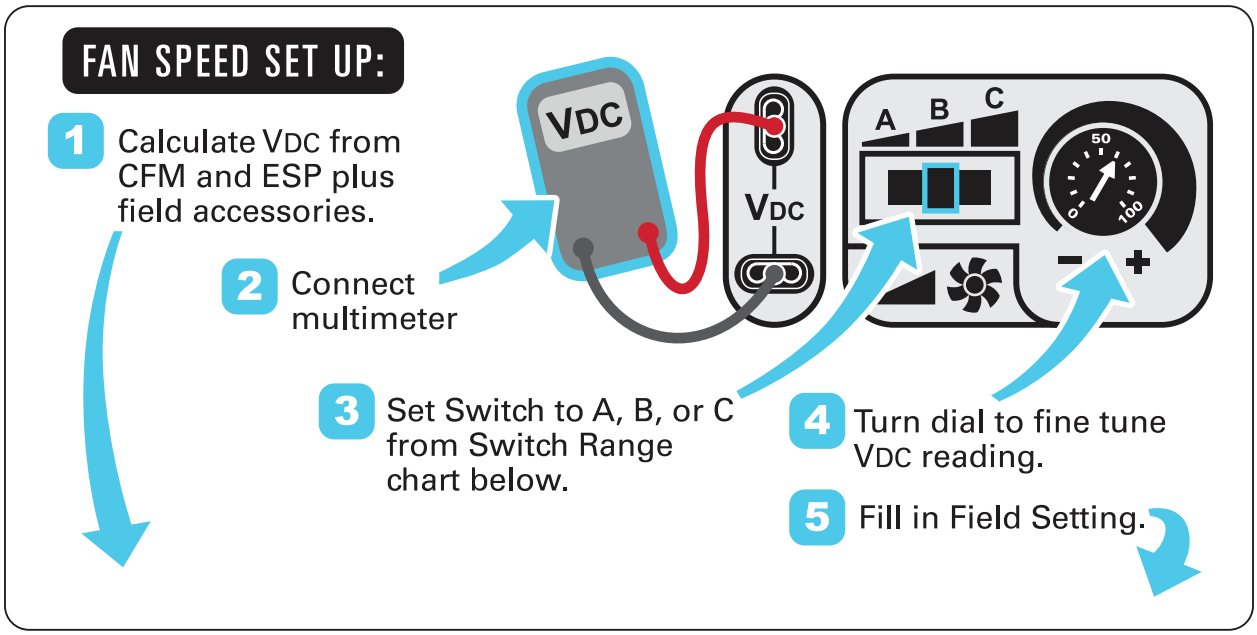


VDC Calculator

| UNIT MODEL NUMBER / CFM | ESP in. wg 0.2 | 0.4 | 0.6 | 0.8 | 1.0 | 1.2 | 1.4 | 1.6 | 1.8 | 2.0 |
|---|---|---|---|---|---|---|---|---|---|---|
| 3000 | 5.6 | 6.1 | 6.5 | 6.9 | 7.3 | 7.6 | 8.0 | 8.3 | 8.6 | 8.9 |
| 3250 | 6.0 | 6.4 | 6.8 | 7.2 | 7.6 | 7.9 | 8.3 | 8.6 | 8.9 | 9.2 |
| 3500 | 6.4 | 6.8 | 7.2 | 7.6 | 7.9 | 8.2 | 8.6 | 8.9 | 9.2 | 9.5 |
| 3750 | 6.8 | 7.2 | 7.5 | 7.9 | 8.2 | 8.6 | 8.9 | 9.2 | 9.5 | 9.7 |
| 4000 | 7.2 | 7.6 | 7.9 | 8.2 | 8.6 | 8.9 | 9.2 | 9.5 | 9.8 | |
| 4250 | 7.6 | 8.0 | 8.3 | 8.6 | 8.9 | 9.2 | 9.5 | 9.8 | | |
| 4500 | 8.0 | 8.4 | 8.7 | 9.0 | 9.3 | 9.6 | 9.8 | | | |
| 4750 | 8.5 | 8.8 | 9.1 | 9.3 | 9.6 | 9.9 | | | | |
| 5000 | 8.9 | 9.2 | 9.4 | 9.7 | 10.0 | | | | | |
| **Field Accessories:** | | | | | | | | | | |
| Economizer | 0.4 | 0.4 | 0.4 | 0.4 | 0.4 | 0.4 | 0.4 | 0.4 | 0.4 | 0.4 |
| | | | | | | | | | | |
| | | | | | | | | | | |

**Factory Setting: 9.0 VDC**

**Field Setting:**

*Record field setting here*

_____ VDC

**Switch Range:** *

| | |
|---|---|
| A | 4.1 - 7.5 |
| B | 6.9 - 8.7 |
| C | 7.7 - 10.0 |

** Overlap in A, B, C switch range designed for maximum field adjustment potential. For example 7.2 can be set at either A or B.*

**Fig. 73 — Example of Fan Speed Set Up Labels for Electro-Mechanical Controls**

UNITS WITH SYSTEMVU™ CONTROLS

On units equipped with the factory-installed SystemVu controller, the Fan Speed settings are accessed through the SystemVu interface.

1. Check the job specifications for the cfm (cubic feet per minute) and ESP (external static pressure) required.
2. Using the chart on the Fan Speed Set Up labels (see Fig. 74), calculate the RPM from the cfm and ESP for the base unit plus any field accessories (as listed on the label).
3. If installing any accessories listed at the bottom of the Set Up Label, add accessory rpm to base unit rpm in upper portion of label.

   NOTE: The Fan Speed Set Up labels are located on the High Voltage cover in the Control Box.
4. Press any key on the SystemVu interface to activate the display backlight and then press the MENU key.
5. Using the UP and DOWN arrow keys highlight SETTINGS and then press ENTER.
6. Use the DOWN arrow key highlight the UNIT CONFIGURATIONS menu then press ENTER.
7. Highlight UNIT CONFIGURATIONS then press ENTER.
8. Highlight INDOOR FAN and then press ENTER.
9. Refer to the job specifications to set the following, determining the values per the RPM Calculator label (see Fig. 74). Use the UP and DOWN arrow keys and the BACK key to set the values. Press ENTER after setting each value to continue to the next selection.

- IDF VENT SPD
- IDF HEAT SPD
- IDF HIGH COOL SPD
- IDF FREE COOL SPD

For further details, see the *FE/GE Series Single Package Rooftop Units with SystemVu Controller Controls, Start-up, Operation and Troubleshooting* manual.

SystemVu™

## FAN SPEED SETUP (RPM)

MAIN MENU:

SETTINGS

→ UNIT CONFIGURATIONS

→ INDOOR FAN

- → IDF VENT SPD -RPM
- → IDF HEAT SPD -RPM
- → IDF HIGH COOL SPD -RPM
- → IDF FREE COOL SPD -RPM

↓ DETERMINE RPM FROM BELOW ↓

48TC003136 REV. B

RPM Calculator

| UNIT MODEL NUMBER / CFM | ESP in. wg 0.2 | 0.4 | 0.6 | 0.8 | 1.0 | 1.2 | 1.4 | 1.6 | 1.8 | 2.0 |
|---|---|---|---|---|---|---|---|---|---|---|
| 3000 | 1250 | 1348 | 1441 | 1528 | 1610 | 1688 | 1762 | 1832 | 1899 | 1963 |
| 3250 | 1336 | 1428 | 1515 | 1598 | 1677 | 1753 | 1824 | 1893 | 1959 | 2021 |
| 3500 | 1423 | 1509 | 1591 | 1670 | 1746 | 1819 | 1888 | 1955 | 2020 | 2081 |
| 3750 | 1510 | 1591 | 1669 | 1744 | 1817 | 1887 | 1954 | 2019 | 2082 | 2143 |
| 4000 | 1598 | 1675 | 1749 | 1820 | 1890 | 1957 | 2022 | 2085 | 2146 | |
| 4250 | 1687 | 1759 | 1829 | 1898 | 1964 | 2029 | 2092 | 2153 | | |
| 4500 | 1776 | 1845 | 1912 | 1977 | 2041 | 2103 | 2163 | | | |
| 4750 | 1866 | 1931 | 1995 | 2057 | 2118 | 2178 | | | | |
| 5000 | 1955 | 2018 | 2079 | 2138 | 2197 | | | | | |
| Field Accessories: | | | | | | | | | | |
| Economizer | 89 | 89 | 89 | 89 | 89 | 89 | 89 | 89 | 89 | 89 |
| | | | | | | | | | | |
| | | | | | | | | | | |

**Fig. 74 — Example of Fan Speed Set Up Labels for SystemVu™ Controls**

## FASTENER TORQUE VALUES

Table 35 details the torque values for the fasteners referenced in this installation instruction.

### Table 35 — Fastener Torque Values

| FASTENER | TORQUE VALUE |
|---|---|
| Heat shield screws | 30 in.-lb (3.4 Nm) ±2 in.-lb (0.2 Nm) |
| Stator motor mounting screws | 23 in.-lb (2.6 Nm) ±2 in.-lb (0.2 Nm) |
| Fan rotor mounting screws | 23 in.-lb (2.6 Nm) ±2 in.-lb (0.2 Nm) |

### Table 35 — Fastener Torque Values (cont)

| FASTENER | TORQUE VALUE |
|---|---|
| Limit switch screws | 50 in.-lb (5.7 Nm) ±5 in.-lb (0.6 Nm) |
| Fan deck bracket screws | 50 in.-lb (5.7 Nm) ±5 in.-lb (0.6 Nm) |
| Condenser fan motor mounting screws | 30 in.-lb (3.4 Nm) ±3 in.-lb (0.3 Nm) |
| Condenser fan hub set screw | 60 in.-lb (6.8 Nm) ±5 in.-lb (0.6 Nm) |
| Compressor mounting bolts | 65 in.-lb (7.3 Nm) ±10 in.-lb (1.2 Nm) |
| Control box grounding lug | 20 in.-lb (2.25 Nm) ±2 in.-lb (0.2 Nm) |

© 2024 Carrier

# START-UP CHECKLIST

48FE 08-12 Packaged Rooftop Units with Gas Heat and Electric Cooling
(Remove and use for job file)

**NOTE: To avoid injury to personnel and damage to equipment or property when completing the procedures listed in this start-up checklist, use good judgment, follow safe practices, and adhere to the safety considerations/information as outlined in preceding sections of this Installation Instruction document.**

## I. PRELIMINARY INFORMATION

MODEL NO _____
JOB NAME _____
SERIAL NO. _____
ADDRESS _____
START-UP DATE _____
TECHNICIAN NAME _____
ADDITIONAL ACCESSORIES _____
_____

## II. PRE-START-UP

| | |
|---|---|
| Verify that all packaging materials have been removed from unit | (Y/N) _____ |
| Verify installation of outdoor air hood | (Y/N) _____ |
| Verify installation of flue exhaust and inlet hood | (Y/N) _____ |
| Verify that condensate connection is installed per instructions | (Y/N) _____ |
| Verify that all electrical connections and terminals are tight | (Y/N) _____ |
| Verify gas pressure to unit gas valve is within specified range | (Y/N) _____ |
| Check gas piping for leaks | (Y/N) _____ |
| Check that indoor-air filters are clean and in place | (Y/N) _____ |
| Check that outdoor air inlet screens are in place | (Y/N) _____ |
| Verify that unit is level | (Y/N) _____ |
| Check fan propellers for location in housing/orifice and verify setscrew is tight | (Y/N) _____ |
| Verify that scroll compressors are rotating in the correct direction | (Y/N) _____ |
| Verify yellow LED light on dissipation board is steady | (Y/N) _____ |
| Verify the dissipation board test button will operate the indoor fan for 1 minute. | (Y/N) _____ |
| Verify installation of thermostat | (Y/N) _____ |
| Verify that crankcase heaters have been energized for at least 24 hours | (Y/N) _____ |

## III. START-UP

### ELECTRICAL

| | | | |
|---|---|---|---|
| Supply Voltage | L1-L2_____ | L2-L3_____ | L3-L1_____ |
| Supply Voltage to Ground | L1 to Ground _____ | L2 to Ground _____ | L3 to Ground _____ |
| Compressor Amps 1 | L1 _____ | L2 _____ | L3 _____ |
| Compressor Amps 2 | L1 _____ | L2 _____ | L3 _____ |
| Supply Fan Amps | L1 _____ | L2 _____ | L3 _____ |

### TEMPERATURES

| | | |
|---|---|---|
| Outdoor-air Temperature | _____ °F DB (Dry Bulb) | |
| Return-air Temperature | _____ °F DB | _____ °F WB (Wet Bulb) |
| Cooling Supply Air Temperature | _____ °F | |
| Gas Heat Supply Air | _____ °F | |

## PRESSURES

| | | | |
|---|---|---|---|
| Gas Inlet Pressure | _____ in. wg | | |
| Gas Manifold Pressure | STAGE 1 | _____ in. wg | |
| | STAGE 2 | _____ in. wg | |
| Refrigerant Suction | STAGE 1 | _____ PSIG | |
| | STAGE 2 | _____ PSIG | |
| Refrigerant Discharge | STAGE 1 | _____ PSIG | |
| | STAGE 2 | _____ PSIG | |
| Verify Refrigerant Charge using Charging Charts | | | (Y/N) _____ |

## GENERAL

Economizer minimum vent and changeover settings to job requirements (if equipped) (Y/N) _____

Verify smoke detector unit shutdown by utilizing magnet test (Y/N) _____

## IV. HUMIDI-MIZER® START-UP

## STEPS

1. UCB (Unit Control Board) for jumper 1, 2, 3 (Jumper 1, 2, 3 must be cut and open) (Y/N) _____
2. Open humidistat contacts (Y/N) _____
3. Start unit In cooling (Close Y1) (Y/N) _____

### OBSERVE AND RECORD

a. Suction pressure _____ PSIG
b. Discharge pressure _____ PSIG
c. Entering air temperature _____ ° F
d. Liquid line temperature at outlet or reheat coil _____ ° F
e. Confirm correct rotation for compressor (Y/N) _____
f. Check for correct ramp-up of outdoor fan motor as condenser coil warms (Y/N) _____

4. Check unit charge per charging chart (Y/N) _____
5. Switch unit to high-latent mode (sub-cooler) by closing humidistat with Y1 closed (Y/N) _____

### OBSERVE

a. Reduction in suction pressure (5 to 7 psi expected) (Y/N) _____
b. Discharge pressure unchanged (Y/N) _____
c. Liquid temperature drops to 50°F to 55°F range (Y/N) _____
d. LSV solenoid energized (valve closes) (Y/N) _____

6. Switch unit to dehumid (reheat) by opening Y1 (Y/N) _____

### OBSERVE

a. Suction pressure increases to normal cooling level (Y/N) _____
b. Discharge pressure decreases (35 to 50 psi) (Limited by Motormaster control) (Y/N) _____
c. Liquid temperature returns to normal cooling level (Y/N) _____
d. LSV solenoid energized (valve closes) (Y/N) _____
e. DSV solenoid energized, valve opens (Y/N) _____

7. With unit in dehumid mode close W1 compressor and outdoor fan stop; LSV and DSV solenoids de-energized (Y/N) _____
8. Open W1 restore unit to dehumid mode (Y/N) _____
9. Open humidistat input compressor and outdoor fan stop; LSV and DSV solenoids de-energized (Y/N) _____
10. Restore set-points for thermostat and humidistat (Y/N) _____

## V. TEMPORARY FURNACE OPERATION DURING CONSTRUCTION

The furnace may be operated during the finishing stage of construction. To ensure proper operation follow checklist below:

1. Prior to the finishing stage of construction, ensure that return air and vent openings are covered to minimize penetration of dust and construction debris into the unit (Y/N) _____
2. Interior drywall installation shall be completed and covered with paint or primer prior to unit operation (Y/N) _____
3. Premises shall be substantially free of debris and dust (Y/N) _____
4. Ensure all return and vent coverings have been removed (Y/N) _____
5. Verify the return ducts (except 100% OA) and supply ducts are connected, are free from obstructions, are clean, and are properly sealed (Y/N) _____
6. Ensure proper vent installation per installation instructions (Y/N) _____
7. Ensure gas piping has been connection per installation instructions (Y/N) _____
8. Verify that the gas piping is free of leaks (Y/N) _____
9. Furnace to be set to operate under appropriate control to ensure proper operation (Y/N) _____
10. Minimum MERV 11 air filters to be installed during the finishing stages of construction (Y/N) _____
11. Set furnace input rate and temperature rise per rating plate marking (Y/N) _____
12. Ensure means for providing combustion air in accordance with the manufacturer's shipped installation instructions (Y/N) _____
13. Return air temperature to be maintained between 55°F (13°C) and 80°F (27°C) (Y/N) _____
14. Furnace shall be set up to operate in accordance with installation instructions and shall be verified for operating conditions including ignition, input rate, temperature rise, and venting (Y/N) _____
15. Install new filters as per installation instructions prior to final occupancy (Y/N) _____

CUT ALONG DOTTED LINE

CUT ALONG DOTTED LINE

© 2024 Carrier

**Manufacturer reserves the right to discontinue, or change at any time, specifications or designs without notice and without incurring obligations.**