COMMERCIAL UNITARY SYSTEMS

Installation, Start-Up and Service Instructions

CONTENTS

Page

GENERAL 2
SAFETY CONSIDERATIONS 2
INSTALLATION 2-37
Rigging and Unit Placement 2
Roof Curb 2
Roof Mount 2
Slab Mount 2
Positioning 3
Field-Fabricated Ductwork 6
Condensate Drains 10
Install Outdoor Hoods 10
• UNIT SIZES 034 AND 044
• UNIT SIZES 054-074
Outdoor-Air Inlet Adjustments 10
• MANUAL OUTDOOR-AIR DAMPER
• ECONOMIZER SETTINGS
Field Wire Routing 17
• UNIT SIZES 034 AND 044
• UNIT SIZES 054-074
Field Electrical Connections 17
• POWER WIRING
• CONTROL WIRING
Gas Piping (48 Series Units Only) 36
Installing Flue/Inlet Hoods (48 Series Units Only) 36
• UNIT SIZES 034 AND 044
• UNIT SIZES 054-074
PRE-START-UP 38-41
Unit Preparation 38
Compressor Mounting 38
Evaporator-Fan Shipping Brackets 38
• UNIT SIZES 034 AND 044
• UNIT SIZES 054-074
Internal Wiring 38
Refrigerant Service Valves 38
Crankcase Heaters 38
Compressor Oil 38
Gas Manifold Pressure (48 Series Units Only) 39
Unit Voltage 39
Leak Test and Dehydration 39
Evaporator-Fan Belts, Pulleys, and Sheaves . . 39
Condenser Fans and Motors 40
Return-Air Filters 40
Economizer Inlet Screens 40
Economizer Dampers 40
25% Outdoor-Air Damper 40
Initial Check 41
START-UP 41,42
General 41
Operating Sequences 41
• COOLING, UNITS WITHOUT ECONOMIZER
• HEATING, UNITS WITHOUT ECONOMIZER

Page

• COOLING, UNITS WITH ECONOMIZER
• HEATING, UNITS WITH ECONOMIZER
• VENTILATION AIR CIRCULATION (Continuous Fan)
• AUTOMATIC CHANGEOVER USING AUTOMATIC CHANGEOVER THERMOSTAT
Head Pressure Control 42
SERVICE 42-53
Service Access 42
• COMPRESSORS
• LIQUID SERVICE VALVES, FILTER DRIERS, AND SIGHT GLASSES
• EVAPORATOR-FAN MOTORS, PULLEYS, AND BELTS
• POWER EXHAUST MOTORS, PULLEYS, AND BELTS
• UNIT CONTROL BOX
• GAS HEAT SECTION (48 Series Units Only)
• MAIN AND PILOT BURNERS (48 Series Units Only)
• FLUE GAS PASSAGEWAYS (48 Series Units Only)
• COMBUSTION AIR BLOWER (48 Series Units Only)
• ECONOMIZER DAMPER MOTOR
• ELECTRIC HEATER CONTROL BOX (50 Series Units Only)
• HEATER BOX (50 Series Units Only)
• 25% OUTDOOR-AIR DAMPER
• MODULATING POWER EXHAUST DAMPER MOTOR
• RETURN-AIR FILTERS
• CONDENSER FANS AND FAN MOTORS
• INLET GUIDE VANE MOTOR
Cleaning 45
Lubrication 45
• COMPRESSORS
• FAN SHAFT BEARINGS
• INLET GUIDE VANE BEARINGS (Units With Optional Inlet Guide Vanes)
• FAN MOTOR BEARINGS
• DOOR HINGES
Adjustments 46
• EVAPORATOR FAN AND POWER EXHAUST MOTOR PLATE
• MODULATING POWER EXHAUST DIFFERENTIAL PRESSURE SWITCH
• INLET GUIDE VANE DIFFERENTIAL PRESSURE SWITCH (Units With Optional Inlet Guide Vanes and Static Pressure Control)
• BELT INSTALLATION AND TENSIONING
• PULLEY ALIGNMENT
• INSTALLING ALTERNATE MOTOR PULLEY (Evaporator Fan Only)
• CONDENSER FAN ADJUSTMENT
• 25% OUTDOOR-AIR DAMPER
• REFRIGERANT CHARGE
• PILOT LIGHT OFF (48 Series Units Only)

Manufacturer reserves the right to discontinue, or change at any time, specifications or designs without notice and without incurring obligations.

CONTENTS (cont)

- AUTOMATIC PILOT ADJUSTMENT (48 Series Units Only)
- GAS VALVE ADJUSTMENT (48 Series Units Only)
- MAIN BURNER ADJUSTMENT (48 Series Units Only)

Main Burner Removal (48 Series Units Only) . . 50
Switch Adjustment 50
Refrigerant Feed Components 50
Thermostatic Expansion Valve (TXV) 50
Moisture/Liquid Indicator 51
Filter Drier 51
Liquid Line Service Valve 51
Compressor Discharge Service Valve 51
Compressor Suction Service Valve 51
Protective Devices 51
- COMPRESSOR PROTECTION
- EVAPORATOR-FAN MOTOR PROTECTION
- CONDENSER-FAN MOTOR PROTECTION
- HIGH- AND LOW-PRESSURE SWITCHES

Relief Devices 51
Control Circuit, 115 V 52
Control Circuit, 24 v 52
Electric Heat (50 Series Units Only) 52
- OVERCURRENT
- OVERTEMPERATURE

Gas Heat (48 Series Units Only) 52
- LIMIT SWITCHES
- ROLLOUT SWITCH

TROUBLESHOOTING 52-69
Economizer 52
- ECONOMIZER MOTOR CHECKOUT
- ECONOMIZER CONTROL BOARD CHECKOUT

Unit Control Board Checkout 53
- BASIC CHECK
- DETAILED CHECK

START-UP CHECKLIST CL-1

GENERAL

This installation instruction contains base unit installation, start-up, and service instructions only. For complete information on PIC (Product Integrated Controls) and variable-air volume (VAV) controls and troubleshooting, refer to appropriate Controls and Troubleshooting literature also enclosed in this literature packet.

SAFETY CONSIDERATIONS

Installation and servicing of air-conditioning equipment can be hazardous due to system pressure and electrical components. Only trained and qualified service personnel should install, repair, or service air-conditioning equipment.

Untrained personnel can perform basic maintenance functions of cleaning coils and filters and replacing filters. All other operations should be performed by trained service personnel. When working on air-conditioning equipment, observe precautions in the literature, tags and labels attached to the unit, and other safety precautions that may apply.

Follow all safety codes, including ANSI (American National Standards Institute) Z223.1. Wear safety glasses and work gloves. Use quenching cloth for unbrazing operations. Have fire extinguisher available for all brazing operations.

⚠ WARNING

Before performing service or maintenance operations on unit, turn off main power switch to unit. Electrical shock could cause personal injury.

FOR YOUR SAFETY
WHAT TO DO IF YOU SMELL GAS

Do not try to light any appliance. Do not touch any electrical switch; do not use any phone in your building. Immediately call your gas supplier from a neighbor's phone. Follow the gas supplier's instructions. If you cannot reach your gas supplier, call the fire department.

FOR YOUR SAFETY

Do not store or use gasoline or other flammable vapors and liquids in the vicinity of this or any other appliance.

⚠ WARNING

Improper installation, adjustment, alteration, service, or maintenance can cause injury or property damage. Refer to this manual. For assistance or additional information, consult a qualified installer, service agency, or the gas supplier.

⚠ CAUTION

Disconnect gas piping from 48 Series units when leak testing at pressures greater than 0.5 psig. Pressures greater than 0.5 psig will cause gas valve damage resulting in a hazardous condition. If gas valve is subjected to pressure greater than 0.5 psig, it must be replaced. When pressure testing field-supplied gas piping at pressures of 0.5 psig or less, the unit connected to such piping must be isolated by manually closing the gas valve.

INSTALLATION

Rigging and Unit Placement — Inspect unit for transportation damage. File claim with transportation agency. Do not drop unit; keep upright. Use spreader bars over unit to prevent sling or cable damage. Sheets of plywood placed along the condenser coils will provide additional protection. All lifting lugs MUST be used when lifting unit. Level by using unit frame as a reference. See Fig. 1 for information. Unit and accessory weights are shown in Tables 1A, 1B, and 2. Weight distribution and center of gravity can be found in Fig. 2.

Roof Curb — Assemble and install as described in instructions shipped with the accessory. Accessory roof curb and information required to field fabricate a roof curb is shown in Fig. 3A-3C. Install insulation, cant strips, roofing and counter flashing as required. For unit condensate drains to function properly, curb must be level or within tolerances shown in Fig. 3A-3C.

Roof Mount — Check building codes for weight distribution requirements. Unit weight is shown in Tables 1A and 1B. Unit may be mounted on class A, B, or C roofing material.

Slab Mount — Provide a level concrete slab that extends beyond unit cabinet at least 6 inches. Make a slab 8 in. thick with 4 in. above grade. Use gravel apron in front of condenser coil air inlet to prevent grass and foliage from obstructing airflow.

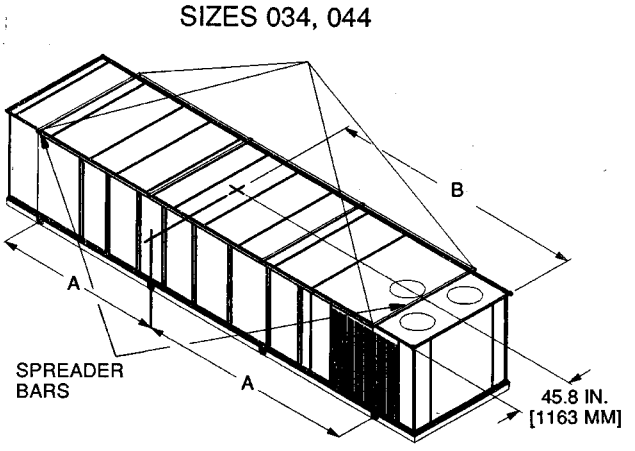

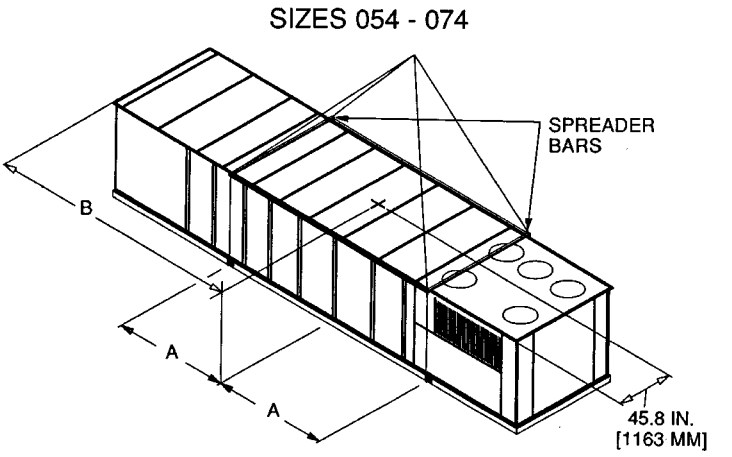

NOTES:
1. Sizes 034,044: Rig with 4 cables and spread with two 95 in. (2413 mm) and 2 ′A + A′ long spreader bars.
   Sizes 054-074: Rig with 4 cables and spread with four 95 in. (2413 mm) and 2 ′A + B + A′ long spreader bars.
2. Center of gravity includes economizer.

⚠ CAUTION

1. All panels must be in place when rigging.
2. Unit is not designed for handling by forklift truck.

RIGGING WEIGHTS AND DIMENSIONS

UNIT	UNIT WEIGHT*		A		B	
	Lb	Kg	in.	mm	in.	mm
48DJD,DKD,NPD034	5941	2694.8	86.0	2185	109.4	2780
48DJE,NPE034	6070	2753.4			110.4	2804
48DJD,DKD,NPD044	6841	3103.1	92.6	2353	127.6	3240
48DJE,NPE044	6970	3161.6			128.6	3267
48DJD,DKD,NPD054	9230	4186.7	121.5	3086	126.8	3221
48DJE,NPE054	9350	4241.2				
48DJD,DKD,NPD064	9530	4322.8				
48DJE,NPE064	9650	4377.2				
48DJD,DKD,NPD074	9950	4513.3	134.7	3421	134.7	3421
48DJE,NPE074	10,080	4572.3				
50DJ,DK,NP034	5700	2585.5	84.8	2153	120.8	3067
50DW,DY,NB034	6270	2844.1	76.4	1940	102.5	2604
50DJ,DK,NP044	6350	2880.4	92.6	2353	126.6	3216
50DW,DY,NB044	6920	3138.9	86.0	2185	108.4	2753
50DJ,DK,NP054	8230	3733.1	120.8	3066	126.8	3221
50DW,DY,NB054	8780	3982.6	109.0	2769	109.0	2769
50DJ,DK,NP064	8530	3869.2	120.9	3071	120.9	3071
50DW,DY,NB064	9080	4119.7	120.8	3066	126.8	3221
50DJ,DK,NP074	8960	4064.3	131.7	3345	137.6	3495
50DW,DY,NB074	9500	4309.2	109.0	2769	109.0	2769

*Includes optional economizer.

Fig. 1 — Rigging Label

If roof curb is not used, support unit with steel beams along its entire length and then support steel as required. As a minimum, unit must be supported across its width at each lifting lug location.

Positioning — Provide clearance around and above unit for airflow, safety, and service access. Do not restrict top (area above condenser fans) in any way. Allow at least 6 ft on all sides for rated performance, code compliance, and service.

Do not install unit in an indoor location. Do not locate air inlets near exhaust vents or other sources of contaminated air.

On units equipped with or power exhaust option, high velocity air is exhausted out the hoods. Unit should be positioned with at least 10 ft clearance between the exhaust hoods and any obstruction. Although unit is weatherproof, guard against water from higher level runoff and overhangs.

Table 1A — Physical Data; 034, 044 Units

BASE UNIT*	034		044	
NOMINAL CAPACITY (tons)	30		40	
OPERATING WEIGHT (lb)				
Base Unit				
48 Series, Low Heat	5641		6541	
48 Series, High Heat	5770		6670	
50 Series, Horizontal Discharge	5970		6620	
50 Series, Vertical Discharge	5400		6050	
With Economizer				
48 Series, Low Heat	5941		6841	
48 Series, High Heat	6070		6970	
50 Series, Horizontal Discharge	6270		6920	
50 Series, Vertical Discharge	5700		6350	
COMPRESSORS	Semi-Hermetic			
Quantity...Type	2...06D		2...06E	
Capacity Steps (%)	17, 33, 50, 66, 83, 100		25, 50, 75, 100	
Number of Refrigerant Circuits	2		2	
REFRIGERANT				
Operating Charge (lb), Sys 1/Sys 2				
Without Hot Gas Bypass	29.0/29.0		40.0/40.0	
With Hot Gas Bypass	31.0/29.0		42.0/40.0	
CONDENSER COILS	⅜-in. Tube Diameter			
Quantity	2		2	
Rows...Fins/in.				
Aluminum	3...15.0		3...15.0	
Copper (Optional)	3...13.7		3...13.7	
Total Face Area (sq ft)	37.5		50.0	
EVAPORATOR COILS	½-in. Tube Diameter			
Quantity	1		2	
Rows...Fins/in.	3...15.0		3...15.0	
Total Face Area (sq ft)	32.1		45.5	
Refrigerant Feed Device...No. per Circuit	TXV...1		TXV...2	
HEATING SECTION (48 Series Units Only)	Low Heat	High Heat	Low Heat	High Heat
Number of Heat Exchangers	6	12	6	12
Input (MBtuh)	264	529	264	529
Output (MBtuh)	211	423	211	423
Temperature Rise Range (F)	0-30	15-45	0-30	15-45
Efficiency (%)	79	79	79	79
Burner Orifice Diameter				
Quantity (in. ...drill no.)	6 (.1285...30)	12 (.1285...30)	6 (.1285...30)	12 (.1285...30)
Pilot Orifice Diameter				
Quantity (in. ...drill no.)	1 (.076...48)	2 (.076...48)	1 (.076...48)	2 (.076...48)
Firing Stages	2	2	2	2
Number of Gas Valves	1	2	1	2
CONDENSER FANS	Propeller Type			
Quantity...Diameter (in.)	2...30		3...30	
Nominal Cfm	18,600		26,000	
Motor Hp...Rpm	1.0...1140		1.0...1140	
EVAPORATOR FAN	Centrifugal 25 x 25 in.			
Nominal Cfm	10,500		14,000	
Maximum Allowable Cfm	15,000		20,000	
Maximum Allowable Rpm	900		900	
Shaft Diameter at Pulley (in.)	1 11/16		1 11/16	
EVAPORATOR-FAN MOTOR AND DRIVE	(Any motor available on any unit)			
Motor Hp	7.5	10.0	15.0	20.0
Motor Frame Size	213T	215T	254T	256T
Efficiency at Full Load (%)				
Standard Efficiency	82.9	85.6	84.5	87.5
High Efficiency†	—	89.5	90.0	91.0
Fan Pulley Pitch Diameter (in.)	13.7	13.7	13.7	13.7
Motor Pulley Pitch Diameter (in.)	34.4	4.3	4.9	5.5
Resulting Fan Rpm	405	510	580	660
Belts Quantity...Model No.				
48 Series and 50 Series, Horizontal Discharge	2...BX60	2...5VX630	2...5VX630	2...5VX630
50 Series, Vertical Discharge	2...BX60	2...5VX630	2...5VX630	2...5VX630
Center Distance Range (in.)				
48 Series and 50 Series, Horizontal Discharge	17.74...14.30	17.74...14.30	17.63...14.01	17.63...14.01
50 Series, Vertical Discharge	19.86...15.87	19.86...15.87	19.04...15.00	19.04...15.00
OPTIONAL POWER EXHAUST	Centrifugal, 15 x 15 in. (Any motor available on any unit)			
Quantity...Motor Hp	2...3.0	2...5.0		2...7.5
Motor Frame Size	56HZ	184T		213T
Efficiency at Full Load (%)	81.0	84.0		82.9
Fan Pulley Pitch Diameter (in.)	6.9	6.9		6.9
Motor Pulley Pitch Diameter (in.)	3.35	4.12		5.0
Shaft Diameter at Pulley (in.)	1 3/16	1 3/16		1 3/16
Resulting Fan Rpm	843	1040		1264
Maximum Allowable Rpm	1300	1300		1300
Belts Quantity...No.	2...3VX670	2...3VX670		2...3VX710
FILTERS				
Standard Efficiency Throwaway (Standard)	12...20 x 25 x 2		12...20 x 25 x 2	
Quantity...Size (in.)	4...16 x 20 x 2		4...16 x 20 x 2	
Medium Efficiency (30%) Pleated (Optional)	12...20 x 25 x 2		12...20 x 25 x 2	
Quantity...Size (in.)	4...16 x 20 x 2		4...16 x 20 x 2	
High Efficiency (90%) Bag Filters with Prefilters (Optional)	6...20 x 24 x 22		6...20 x 24 x 22	
Quantity...Size (in.)	6...20 x 20 x 22		6...20 x 20 x 22	

TXV — Thermostatic Expansion Valve

*Data is for all 48 and 50 Series units of the size listed unless otherwise specified.
†Not available on 575-v units.

Table 1B — Physical Data; 054-074 Units

BASE UNIT*	054		064		074	
NOMINAL CAPACITY (tons)	50		60		75	
OPERATING WEIGHT (lb)						
Base Unit						
48 Series, Low Heat	8700		9000		9420	
48 Series, High Heat	8820		9120		9550	
50 Series, Horizontal Discharge	8250		8550		8970	
50 Series, Vertical Discharge	7700		8000		8430	
With Economizer						
48 Series, Low Heat	9230		9530		9950	
48 Series, High Heat	9350		9650		10,080	
50 Series, Horizontal Discharge	8780		9080		9500	
50 Series, Vertical Discharge	8230		8530		8960	
COMPRESSORS	Semi-Hermetic					
Quantity...Type	2...06E		2...06E		2...06E	
Capacity Steps (%)	20, 40, 60, 80, 100		17, 33, 50, 66, 83, 100		14, 28, 43, 71, 85, 100	
Number of Refrigerant Circuits	2		2		2	
REFRIGERANT						
Operating Charge (lb), Sys 1/Sys 2						
Without Hot Gas Bypass	59.0/44.5		61.0/61.0		70.5/64.5	
With Hot Gas Bypass	62.0/44.5		64.0/61.0		73.5/64.5	
CONDENSER COILS	⅜-in. Tube Diameter					
Quantity	4		4		4	
Rows...Fins/in.						
Aluminum	2...17.0, 3...17.0		3...17.0		3...17.0	
Copper (Optional)	2...15.7, 3...15.7		3...15.7		3...15.7	
Total Face Area (sq ft)	72.4		72.4		108.4	
EVAPORATOR COILS	½-in. Tube Diameter					
Quantity	2		2		2	
Rows...Fins/in.	3...17.0		4...17.0		4...17.0	
Total Face Area (sq ft)	61.5		61.5		61.5	
Refrigerant Feed Device... No. per Circuit	TXV...2		TXV...2		TXV..2	
HEATING SECTION (48 Series Units Only)	Low Heat	High Heat	Low Heat	High Heat	Low Heat	High Heat
Number of Heat Exchangers	12	18	12	18	12	18
Input (MBtuh)	540	810	540	810	540	810
Output (MBtuh)	432	648	432	648	432	648
Temperature Rise Range (F)	5-35	15-45	5-35	15-45	5-35	15-45
Efficiency (%)	80	80	80	80	80	80
Burner Orifice Diameter						
Quantity (in. ...drill no.)	12 (.1285...30)	18 (.1285...30)	12 (.1285...30)	18 (.1285...30)	12 (.1285...30)	18 (.1285...30)
Pilot Orifice Diameter						
Quantity (in. ...drill no.)	2 (.076...48)	3 (.076...48)	2 (.076...48)	3 (.076...48)	2 (.076...48)	3 (.076...48)
Firing Stages	2	2	2	2	2	2
Number of Gas Valves	2	3	2	3	2	3
CONDENSER FANS	Propeller Type					
Quantity...Diameter (in.)	4...30		4...30		5...30	
Nominal Cfm	40,000		40,000		50,000	
Motor Hp...Rpm	1.0...1140		1.0...1140		1.0...1140	
EVAPORATOR FAN	Centrifugal 30 x 27 in.					
Nominal Cfm	17,500		21,000		24,500	
Maximum Allowable Cfm	25,000		30,000		30,000	
Maximum Allowable Rpm	750		750		750	
Shaft Diameter at Pulley (in.)	1 11/16		1 11/16		1 11/16	
EVAPORATOR-FAN MOTOR AND DRIVE	(Any motor available on any unit)					
Motor Hp	15.0	20.0		25.0		30.0
Motor Frame Size	254T	256T		284T		286T
Efficiency at Full Load (%)						
Standard Efficiency	84.5	87.5		87.1		88.3
High Efficiency†	90.0	91.0		91.7		92.4
Fan Pulley Pitch Diameter (in.)	13.7	13.7		13.7		15.5
Motor Pulley Pitch Diameter (in.)	4.5	5.1		5.5		5.9
Resulting Fan Rpm	555	625		660		700
Belts Quantity...Model No.						
48 Series and 50 Series, Horizontal Discharge	2...5VX1120	2...5VX1150		2...5VX1150		2...5VX1180
50 Series, Vertical Discharge	2...5VX1230	2...5VX1230		2...5VX1230		2...5VX1230
Center Distance Range (in.)						
48 Series and 50 Series, Horizontal Discharge	48.25...44.00	48.25...44.00		48.50...44.25		48.50...44.25
50 Series, Vertical Discharge	44.25...39.75	44.25...39.75		44.00...40.00		44.00...40.00
OPTIONAL POWER EXHAUST	Centrifugal, 18 x 15 in. (Any motor available on any unit)					
Quantity...Motor Hp	2...5.0		2...7.5		2...10.0	
Motor Frame Size	184T		213T		215T	
Efficiency at Full Load (%)	84.0		82.9		85.6	
Fan Pulley Pitch Diameter (in.)	10.6		10.6		10.6	
Motor Pulley Pitch Diameter (in.)	4.5		5.0		5.6	
Shaft Diameter at Pulley (in.)	1 7/16		1 7/16		1 7/16	
Resulting Fan Rpm	740		820		920	
Maximum Allowable Rpm	925		925		925	
FILTERS						
Standard Efficiency						
Throwaway (Standard)	15...20 x 25 x 2		15...20 x 25 x 2		15...20 x 25 x 2	
Quantity...Size (in.)	5...16 x 20 x 2		5...16 x 20 x 2		5...16 x 20 x 2	
Medium Efficiency (30%) Pleated (Optional)	15...20 x 25 x 2		15...20 x 25 x 2		15...20 x 25 x 2	
Quantity...Size (in.)	5...16 x 20 x 2		5...16 x 20 x 2		5...16 x 20 x 2	
High Efficiency (90%) Bag Filters with Prefilters (Optional)	6...20 x 24 x 22		6...20 x 24 x 22		6...20 x 24 x 22	
Quantity...Size (in.)	6...24 x 24 x 22		6...24 x 24 x 22		6...24 x 24 x 22	

TXV — Thermostatic Expansion Valve

*Data is for all 48 and 50 Series units of the size listed unless otherwise specified.
†Not available on 575-v units.

Table 2 — Operating Weights of Options and Accessories

OPTION OR ACCESSORY	UNIT SIZE				
	034	044	054	064	074
Roof Curb					
48DJ,DK,NP	450	480	515	515	515
50DW,DY,NB	450	480	560	560	560
50DJ,DK,NP	380	465	515	515	515
Condenser Section Roof Curb	—	—	540	540	625
Economizer	300*	300*	530*	530*	530*
Power Exhaust	600*	600*	710*	710*	710*
Barometric Relief	200	200	200	200	200
High-Efficiency Filters	20	20	20	20	20
Bag filters	35	35	40	40	40
Hail Guard	120	150	145	145	210
Copper Condenser Coil Fins	180	235	235	235	420
Electric Heat†	150	150	150	150	150
Inlet Guide Vanes	95	95	115	115	115

*Includes hood.
†50 Series vertical discharge units.

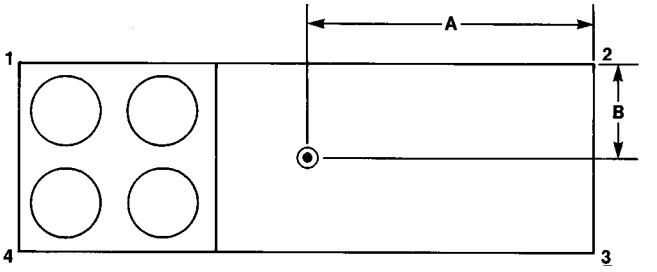

UNIT CENTER OF GRAVITY AND CORNER WEIGHTS

UNIT		CORNER WEIGHT (lb)				DIMENSIONS (Ft-in.)	
		1	2	3	4	A	B
48DJD,DKD,NPD	**034**	1754	1213	1216	1758	14- 9	3- 8
	044	2035	1382	1385	2039	17- 3	3- 8
	054	2334	2276	2281	2339	19- 7	3-10
	064	2431	2328	2334	2437	19- 7	3-10
	074	2452	2518	2523	2457	21- 0	3-10
48DJE,NPE	**034**	1781	1251	1253	1785	14- 8	3-10
	044	2057	1424	1428	2061	17- 2	3-10
	054	2375	2295	2300	2380	19- 7	3-10
	064	2393	2373	2378	2506	19- 7	3-10
	074	2494	2541	2546	2499	21- 0	3-10
50DW,DY,NB	**034**	1864	1268	1271	1867	13- 3	3-10
	044	2070	1387	1389	2074	15-10	3-10
	054	2381	2005	2009	2385	19-10	3-10
	064	2461	2074	2078	2467	19-10	3-10
	074	2551	2194	2199	2556	21- 3	3-10
50DJ,DK,NP	**034**	1674	1173	1175	1678	13- 9	3-10
	044	1879	1292	1295	1884	16- 3	3-10
	054	2090	2021	2025	2094	18- 2	3-10
	064	2188	2073	2077	2192	18- 2	3-10
	074	2212	2263	2269	2216	21- 3	3-10

NOTE: Weights include economizer.

Fig. 2 — Weight Distribution and Center of Gravity

Field-Fabricated Ductwork — Units are designed for vertical supply/return only. Field-fabricated ductwork should be attached to the roof curb. Supply and return duct dimensions are shown in Fig. 3A-3C.

To attach ductwork to roof curb, insert duct approximately 10 to 11 in. up into roof curb. Connect ductwork to 14-gage roof curb material with sheet metal screws driven from inside of the duct.

Secure all ducts to the building structure, using flexible duct connectors between roof curb and ducts as required. Ducts passing through an unconditioned space must be insulated and covered with a vapor barrier. Outlet grilles must not lie directly below unit discharge. The return duct must have a 90-degree elbow before opening into the building space if unit is equipped with power exhaust.

Design supply duct strong enough to handle expected static pressures.

UNIT MODEL	UNIT SIZE	X		Y	
		mm	ft-in.	mm	ft-in.
48DJ,DK,NP	034	6606	21-8 1/16	4056	13- 3 11/16
50DW,DY,NB	034				
50DJ,DK,NP	034	6131	20-1 3/8	3311	10-10 3/8
48DJ,DK,NP	044	7825	25-8 1/16	4893	16- 0 5/8
50DW,DY,NB	044				
50DJ,DK,NP	044	7344	24-1 1/8	4141	13- 7 1/16

NOTES:
1. Roof curb is shipped unassembled.
2. Roof curb: 14 gage (VA03-56) steel.
3. Dimensions in [ ] are millimeters.

UNIT LEVELING TOLERANCES

DIMENSIONS*
(degrees and inches)

A		B	
Deg	**in.**	**Deg**	**in.**
1.0	2.0	.50	.75

*From edge of unit to horizontal.

NOTE: To prevent the hazard of stagnant water build-up in the drain pan of the indoor-air section, unit can only be pitched as shown.

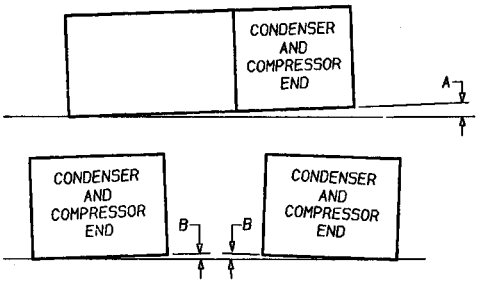

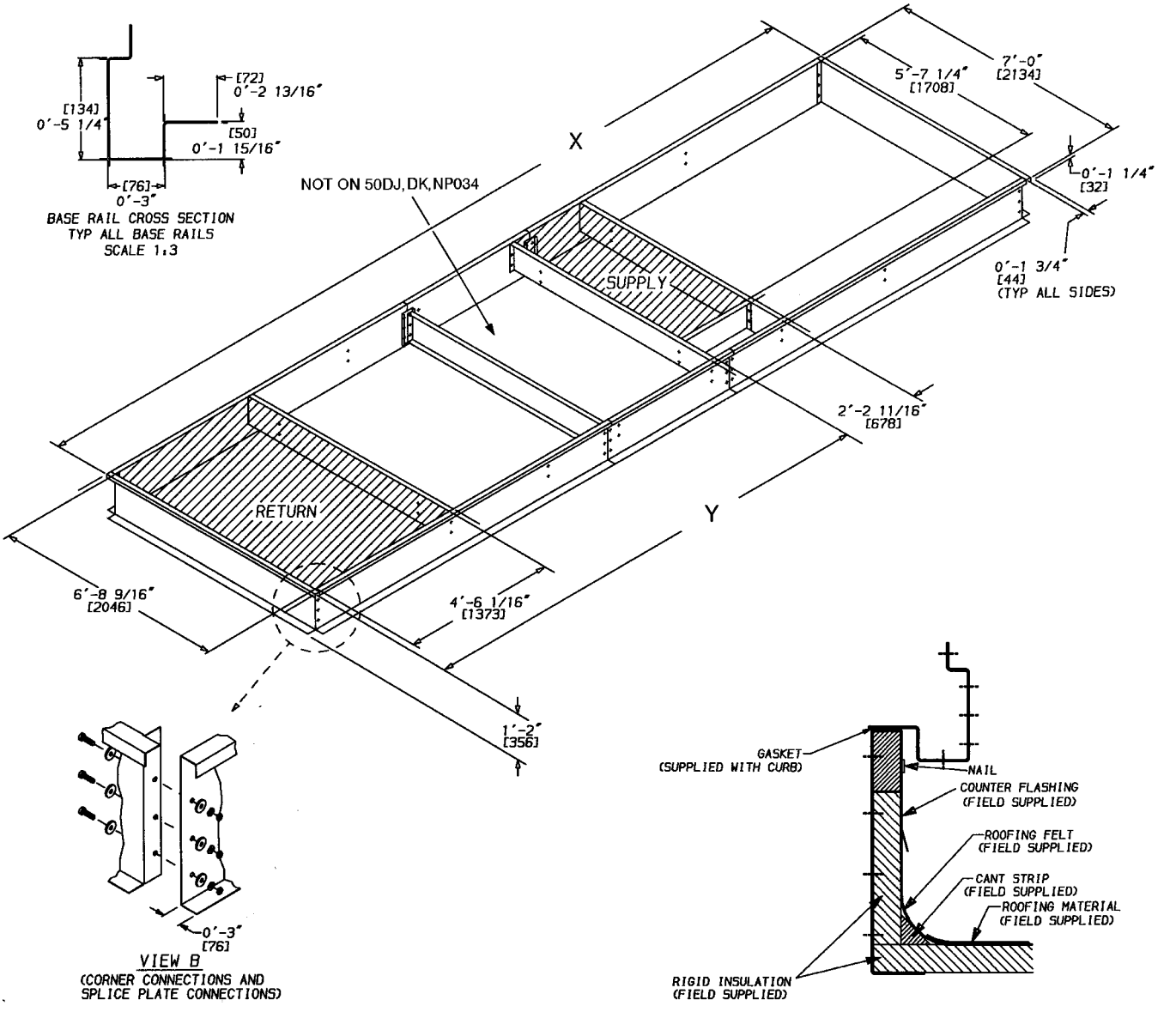

Fig. 3A — Roof Curb; 034, 044 Units

UNIT MODEL	UNIT SIZE	X		Y		Z	
		mm	ft-in.	mm	ft-in.	mm	ft-in.
48DJ,DK,NP	054,064	2474	8-1⅜	8476	27-9 11/16	6965	22-10 9/16
50DW,DY,NB	054,064						
50DJ,DK,NP	054,064	2458	8-0¾	7444	24-5 1/16	5933	19- 5 9/16
48DJ,DK,NP	074	3383	11-1 3/16	8476	27-9 11/16	6965	22-10 9/16
50DW,DY,NB	074						
50DJ,DK,NP	074	3367	11-0 9/16	7444	24-5 1/16	5933	19- 5 9/16

NOTES:
1. Roof curb is shipped unassembled.
2. Roof curb: 14 gage (VA03-56) steel.
3. Dimensions in [ ] are millimeters.
4. Suggested hole location for field wiring through roof curb (holes to be field drilled).

NOTE: To prevent the hazard of stagnant water build-up in the drain pan of the indoor-air section, unit can only be pitched as shown.

UNIT LEVELING TOLERANCES

DIMENSIONS*
(degrees and inches)

A		B	
Deg	**in.**	**Deg**	**in.**
1.0	2.0	.50	.75

*From edge of unit to horizontal.

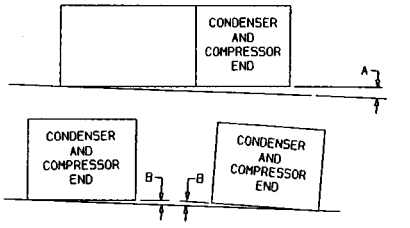

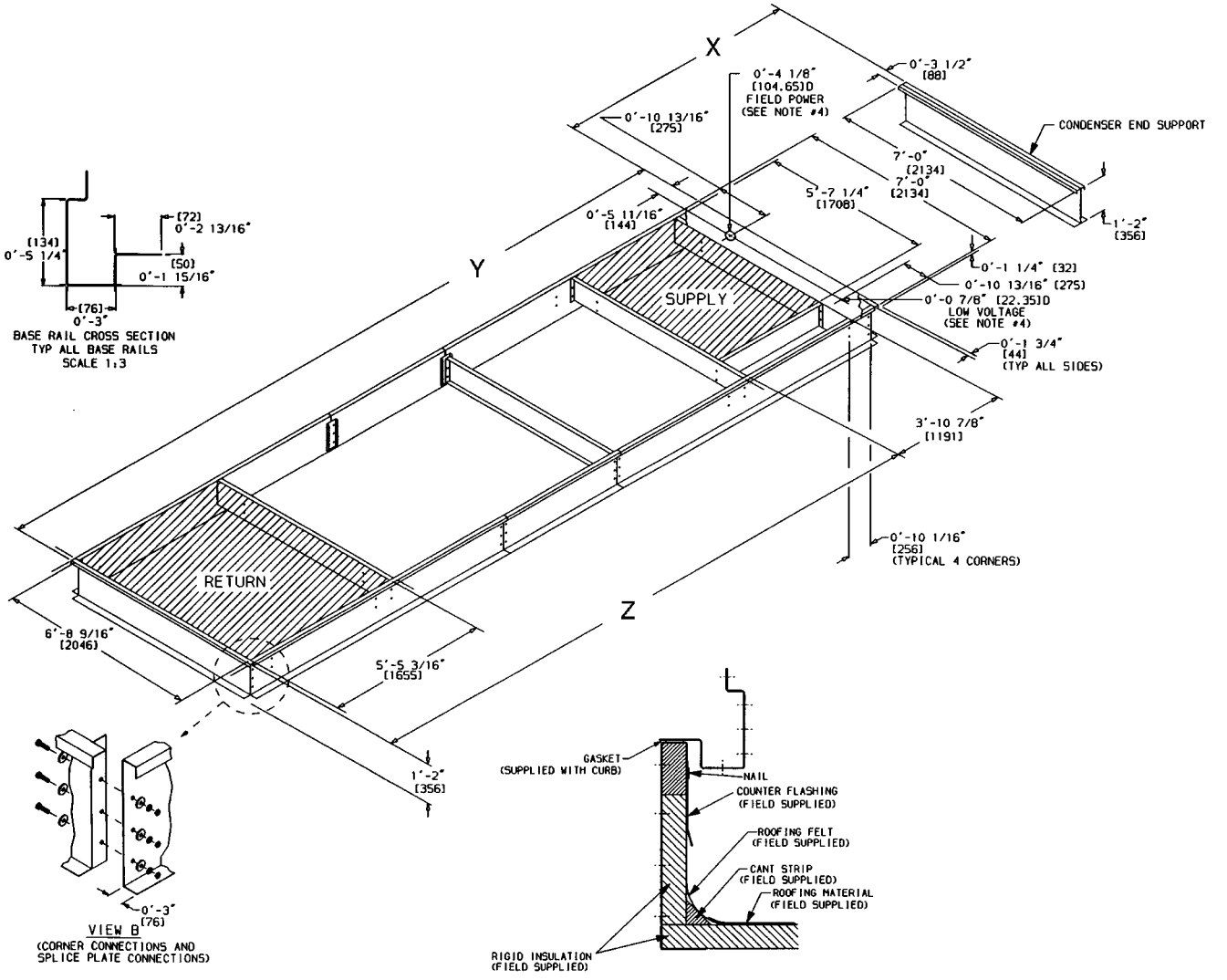

Fig. 3B — Roof Curb; 054-074 Units

UNIT SIZE	DIMENSION X	
	mm	Ft-in.
054,064	270	0-10⅝
074	255	0-10 1/16

UNIT LEVELING TOLERANCES

DIMENSIONS*
(degrees and inches)

A		B	
Deg	**in.**	**Deg**	**in.**
1.0	2.0	.50	.75

*From edge of unit to horizontal.

NOTE: To prevent the hazard of stagnant water build-up in the drain pan of the indoor-air section, unit can only be pitched as shown.

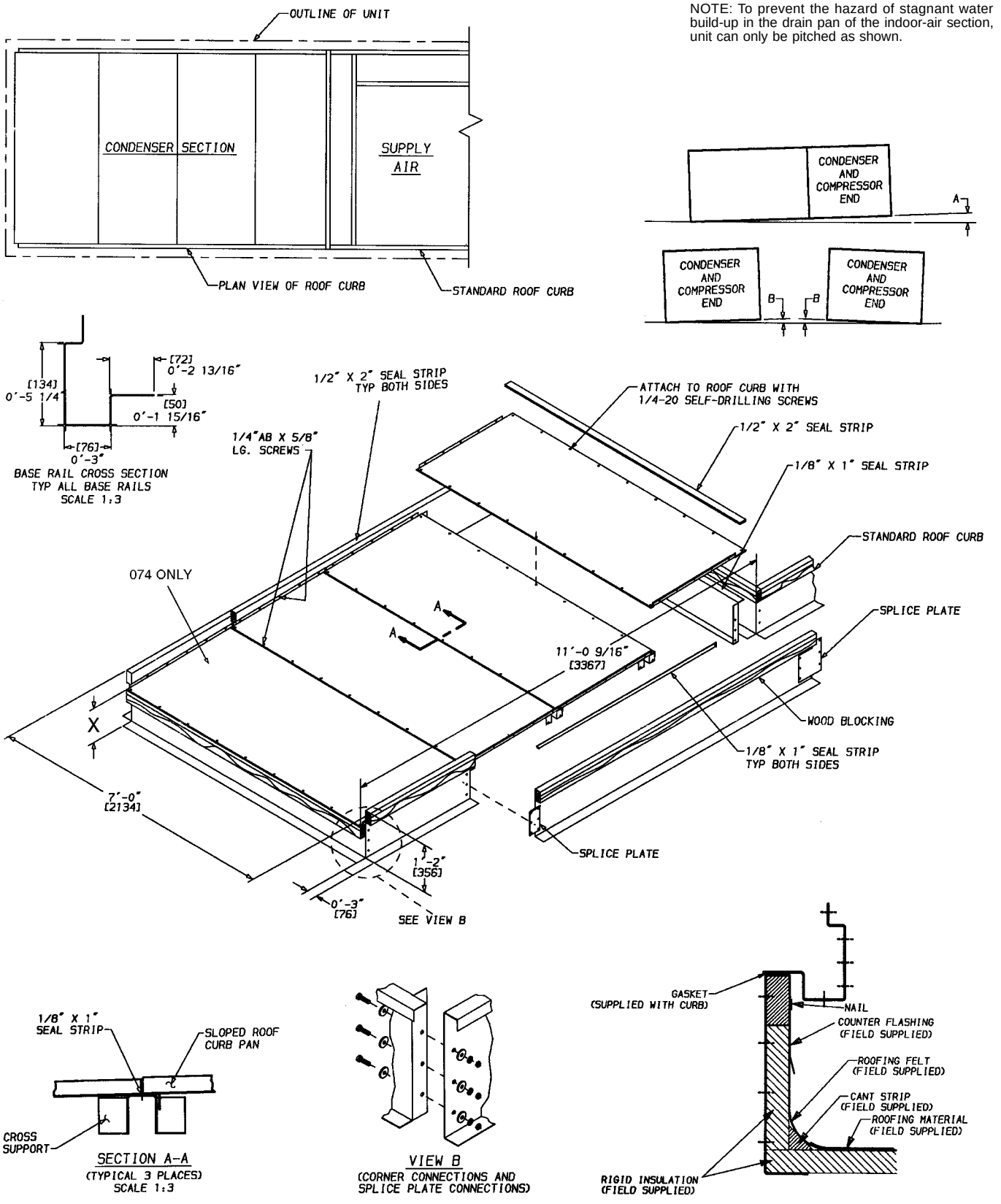

Fig. 3C — Condenser Section Roof Curb (054-074 Units Only)

Condensate Drains — See Fig. 4A-4D and Fig. 5 for drain locations. The drain assemblies, each consisting of a 10-gage plate with a 1¼-in. half coupling welded to it, are shipped in the unit fan section. Also included are 16-gage seal plates to cover the drain holes not being used. Open the access door marked FAN SECTION to find the drain assemblies, seal plates, and 4 screws for each mounting taped to the unit basepan.

After the unit has been set in place on the roof:

1. Select the appropriate drain locations. The 034 units have 6 drain holes (3 per side), and the 044-074 units have 8 drain holes (4 per side). Two holes on each side must be selected for condensate drains as shown in Fig. 5, and the remaining holes must be sealed.
2. Remove the drain assemblies and attach them to the bottom of the unit base rails at the preferred drain locations using the screws provided. See Fig. 6.

   NOTE: Use a trap at least 4-in. deep.
3. Cover the remaining drain holes with the seal plates and screws provided. See Fig. 7.
4. Apply a bead of RTV or similar sealant around the drain assemblies and seal plates where they attach to the base rail. See Fig. 8.

NOTE: If unit is slab mounted, holes will need to be drilled in the side of the base rail and the holes factory-drilled in the bottom of the base rail will need to be plugged.

Install Outdoor Hoods

UNIT SIZES 034 AND 044

25% Outdoor-Air Hoods (Units Without Economizer Option)

1. Outdoor-air hoods are shipped bolted to the unit in a shipping position. Remove the 6 screws holding each 25% air hood shipping cover in place.
2. Replace the 6 screws.
3. Remove the holddown screw from each upper corner of each hood.
4. Pivot hoods outward (2 hoods total).
5. Install 17 screws around outside of each hood. (Screws are in the fastener package taped to the basepan inside the fan section.)
6. Apply a bead of RTV or similar sealant to corner of each hood at pivot point to prevent water leaks. See Fig. 9.

Economizer Hoods (Units With Economizer Option) — Follow the same procedure described in 25% Outdoor-Air Hoods section above.

UNIT SIZES 054-074

25% Outdoor-Air Hoods — The outdoor-air hoods are factory installed on the 054-074 units.

Economizer Hoods (Units With Economizer Option)

1. Remove the 6 screws holding each of the 4 economizer shipping covers in place.
2. Replace the screws.
3. Remove the holddown screw from each upper corner of each economizer hood.
4. Pivot hoods outward. (There is a total of 4 hoods.)
5. Install 18 screws, (5 each side, 6 top, and 2 bottom), around the outside of each hood. (Screws are in the fastener package taped to the basepan inside the fan section.)
6. Apply a bead of RTV or similar sealant to corner of economizer hood at pivot point to prevent water leaks. (See Fig. 9.)

Outdoor-Air Inlet Adjustments

MANUAL OUTDOOR-AIR DAMPER (Units Without Economizer Option) — All units except those equipped with a factory-installed economizer have a manual outdoor-air damper to provide ventilation air. This damper can be preset to admit up to 25% outdoor air into the return-air compartment. To adjust, loosen the blade limiter screws as shown in Fig. 10 and move the damper to the desired position. Then retighten the blade limiter screws to secure the damper. See Fig. 10. (To make this adjustment, it is necessary to remove the screens covering the hood opening and make adjustments from inside the hood.)

ECONOMIZER SETTINGS

Enthalpy Sensor (See Fig. 11.) — This sensor is located behind the filters in the end economizer hood (the upper hood on sizes 054-074). See Fig. 12. For maximum benefit of outdoor air, set enthalpy sensor control to the A setting. At this setting, when the relative humidity is 50%, and the outdoor air is below 74 F, the sensor's relay contacts will be closed. See Fig. 13 and 14.

NOTE: Enthalpy control setting dial is on the economizer motor.

Mixed-Air Thermistor (MAT) — This control set point adjustment is on the top of the economizer motor. This motor is located in the return-air section, and is accessed by opening the access panel marked FILTER SECTION. See Fig. 15. Set MAT set point adjustment dial to the desired setting. The factory setting is 55 F ± 5° F; range is 40 to 90 F. The MAT is located on the filter rack.

Damper Vent Position — The position setting adjustment is located on the cover of the economizer motor. See Fig. 15. Adjust by setting the fan switch at ON position (continuous fan operation), and setting the system selector switch to OFF position. Then turn adjustment screw slowly until the dampers assume the desired vent position. Do not manually operate the damper motor; damage to the motor may result.

Economizer Damper Linkage Adjustment — When replacing economizer damper motors, or if the linkage has come loose, it is critical that the linkages be adjusted correctly. They are sensitive, and incorrect adjustment can cause the motor to stall.

NB,NP Unit Minimum Position Set Point — Minimum economizer position is set using the keypad and display module. Refer to Control and Troubleshooting literature for more details.

UNIT	SIZE	WEIGHT		A		B		C		D		E		F		G		H		J	
		lb	kg	mm	ft-in.	mm	ft-in.	mm	ft-in.	mm	ft-in.	mm	ft-in.	mm	ft-in.	mm	ft-in.	mm	ft-in.	mm	ft-in.
48DJD,DKD,NPD	034	5641	2559	4498	14-9⅛	3662	12-0 3/16	7278	23-10 9/16	1709	5-7 5/16	2216	7- 3¼	4228	13-10 7/16	2746	9-0⅛	—	—	3626	12-10 9/16
48DJE,NPE		5770	2617	4474	14-8⅛																
50DW,DY,NB		5970	2708	4044	13-3¼																
48DJD,DKD,NPD	044	6541	2967	5255	17-2⅞	4497	14-9 1/16	8496	27-10½	2328	7-7⅝	2091	6-10 5/16	4706	15-5	3363	11-0⅜	3769	12-4⅜	4762	15-7½
48DJE,NPE		6670	2708	5229	17-1⅞																
50DW,DY,NB		6620	3003	4823	15-9⅞																

UNIT	SIZE	K		L	
		mm	ft-in.	mm	ft-in.
48DJD,DKD,NPD	034	4741	15-6	6797	22-3⅝
48DJE,NPE					
50DW,DY,NB					
48DJD,DKD,NPD	044	5576	8-3½	8015	26-3 9/16
48DJE,NPE					
50DW,DY,NB					

LEGEND
CONN — Connection
DIM — Dimension

NOTES:
1. Dimensions in [ ] are in millimeters.
2. Center of Gravity includes economizer. Unit weight does not include economizer.
3. Unit clearances:
   Top — Do not restrict condenser fans
   Control Box End — 6′-0″
   Sides — 6′-0″
   Economizer End — 6′-0″ (except power exhaust units 10′-0″)
   For smaller service and operational clearances, contact Carrier Product Engineering Department.
4. Vertical discharge ducts designed to be attached to accessory roof curb. If unit is mounted on dunnage, support the ducts using cross braces as done on the accessory roof curb.
5. When unit is slab mounted, locate the condensate drain as low as possible on vertical face of base rail at the same location as the standard condensate drain (using factory supplied fitting). Plug factory drilled condensate hole.

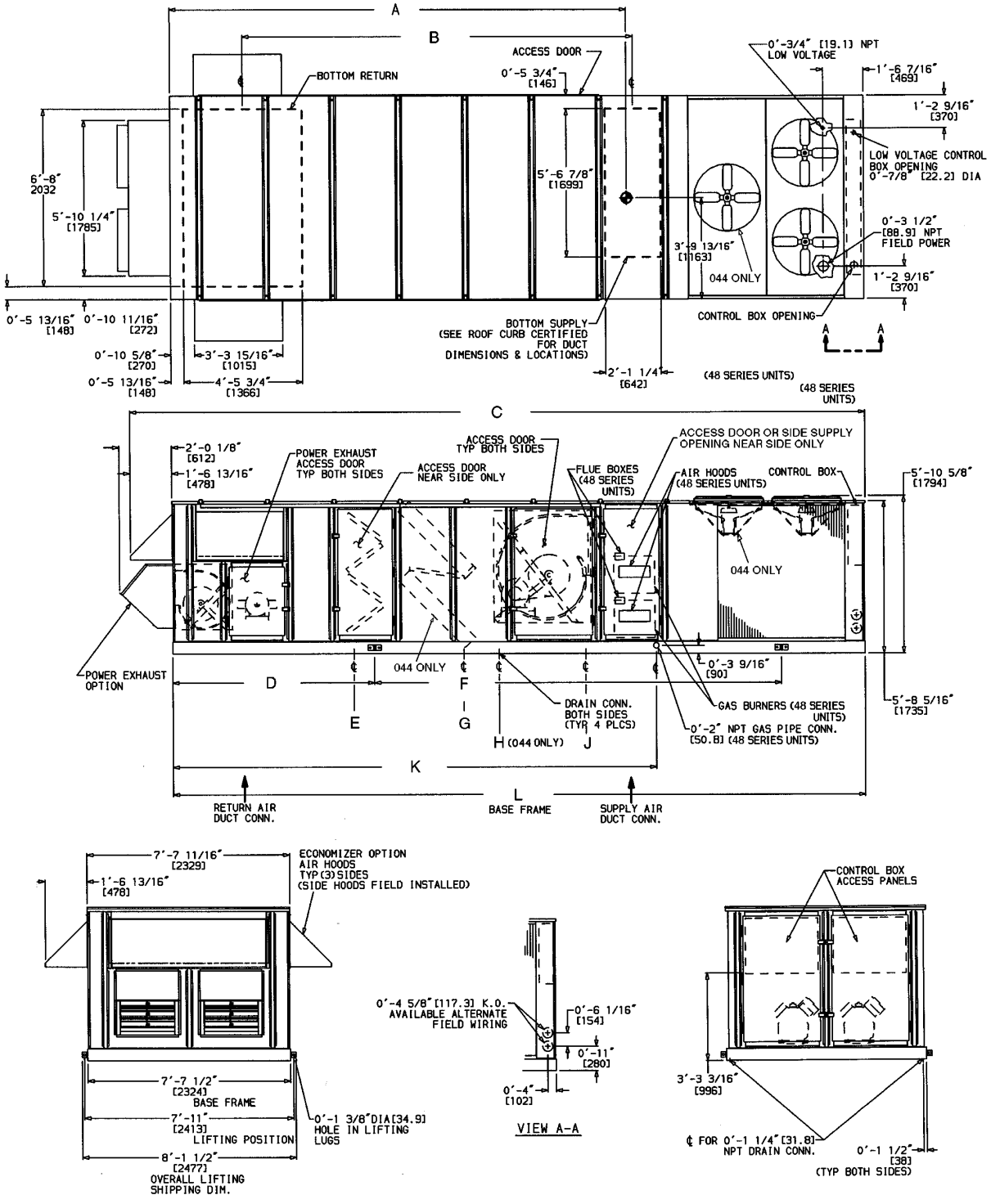

Fig. 4A — Base Unit Dimensional Drawing; 48DJ,DK,NP/50DW,DY,NB034,044 Units

UNIT	SIZE	WEIGHT		A		B		C		D		E		F		G		H	
		lb	kg	mm	ft-in.	mm	ft-in.	mm	ft-in.	mm	ft-in.	mm	ft-in.	mm	ft-in.	mm	ft-in.	mm	ft-in.
50DJ,DK,NP	034	5400	2449	4198	13-9¼	2916	9-6 13/16	6802	22-3 13/16	1711	5-7⅜	2216	7- 3¼	4428	9-0⅛	3762	12-4⅜	—	—
	044	6050	2744	4948	16-2 13/16	3746	12-3½	8015	26-3 9/16	2247	7-4 7/16	2091	6-10 5/16	3363	11-0⅜	4306	14-1½	3769	12-4⅜

UNIT	SIZE	J		K	
		mm	ft-in.	mm	ft-in.
50DJ,DK,NP	034	4168	13-8 1/16	6321	20-8⅞
	044	4999	16-4 13/16	7534	24-8⅝

LEGEND
CONN — Connection
DIM — Dimension

NOTES:
1. Dimensions in [ ] are in millimeters.
2. Center of Gravity includes economizer. Unit weight does not include economizer.
3. Unit clearances:
   Top — Do not restrict condenser fans
   Control Box End — 6′-0″
   Sides — 6′-0″
   Economizer End — 6′-0″ (except power exhaust units 10′-0″)
   For smaller service and operational clearances, contact Carrier Product Engineering Department.
4. Vertical discharge ducts designed to be attached to accessory roof curb. If unit is mounted on dunnage, support the ducts using cross braces as done on the accessory roof curb.
5. When unit is slab mounted, locate the condensate drain as low as possible on vertical face of base rail at the same location as the standard condensate drain (using factory supplied fitting). Plug factory drilled condensate hole.

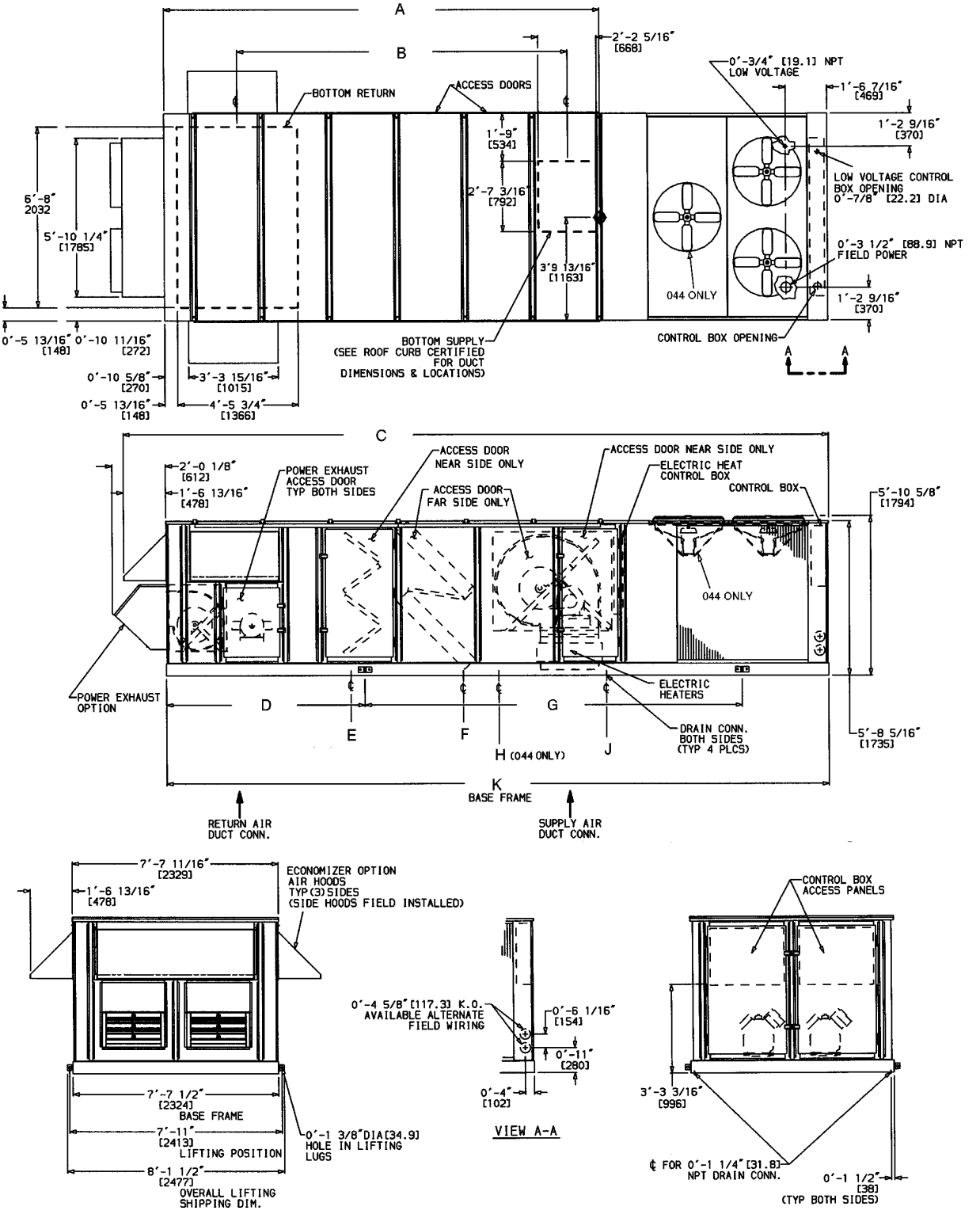

Fig. 4B — Base Unit Dimensional Drawing; 50DJ,DK,NP034,044 Units

UNIT	SIZE	WEIGHT		A		B		C		D		E		F		G	
		lb	kg	mm	ft-in.	mm	ft-in.	mm	ft-in.	mm	ft-in.	mm	ft-in.	mm	ft-in.	mm	ft-in.
48DJD,DKD,NPD	054	8700	3946	5969	19-7	6717	22-0 7/16	1163	3-9 13/16	11,524	37-9 11/16	2718	8-11	6541	21-5 1/2	11,140	36-6 9/16
48DJE,NPE		8820	4000														
50DW,DY,NB		8250	3742	6045	19-10	7676	25-2 3/16					2830	9-3 3/4	6427	21-1		
48DJD,DKD,NPD	064	9000	4082	5969	19-7	6717	22-0 7/16	1163	3-9 13/16	11,524	37-9 11/16	2718	8-11	6541	21-5 1/2	11,140	36-6 9/16
48DJE,NPE		9120	4137														
50DW,DY,NB		8550	3878	6045	19-10	7676	25-2 3/16					2830	9-3 3/4	6427	21-1		
48DJD,DKD,NPD	074	9420	4273	6401	21-0	6717	22-0 7/16	1163	3-9 13/16	12,433	40-9 1/2	3543	11-7 1/2	5715	18-9	12,049	39-6 3/8
48DJE,NPE		9550	4332														
50DW,DY,NB		8970	4069	6477	21-3	7676	25-2 3/16					3694	12-1 3/4	5563	18-3		

LEGEND
CONN — Connection
DIM — Dimension

*Dimension shown is for 48 series units. On 50 series units, dimension given is measured from economizer end of unit to drain connection closest to condenser fans.

NOTES:
1. Dimensions in [ ] are in millimeters.
2. ⊕ Center of Gravity includes economizer. Unit weight does not include economizer.
3. Unit clearances:
   Top — Do not restrict condenser fans
   Control Box End — 6′-0″
   Sides — 6′-0″ (except power exhaust units 10′-0″)
   Economizer End — 6′-0″ (except power exhaust units 10′-0″)
   For smaller service and operational clearances, contact Carrier Product Engineering Department.
4. Vertical discharge ducts designed to be attached to accessory roof curb. If unit is mounted on dunnage, support the ducts using cross braces as done on the accessory roof curb.
5. When unit is slab mounted, locate the condensate drain as low as possible on vertical face of base rail at the same location as the standard condensate drain (using factory supplied fitting). Plug factory drilled condensate hole.

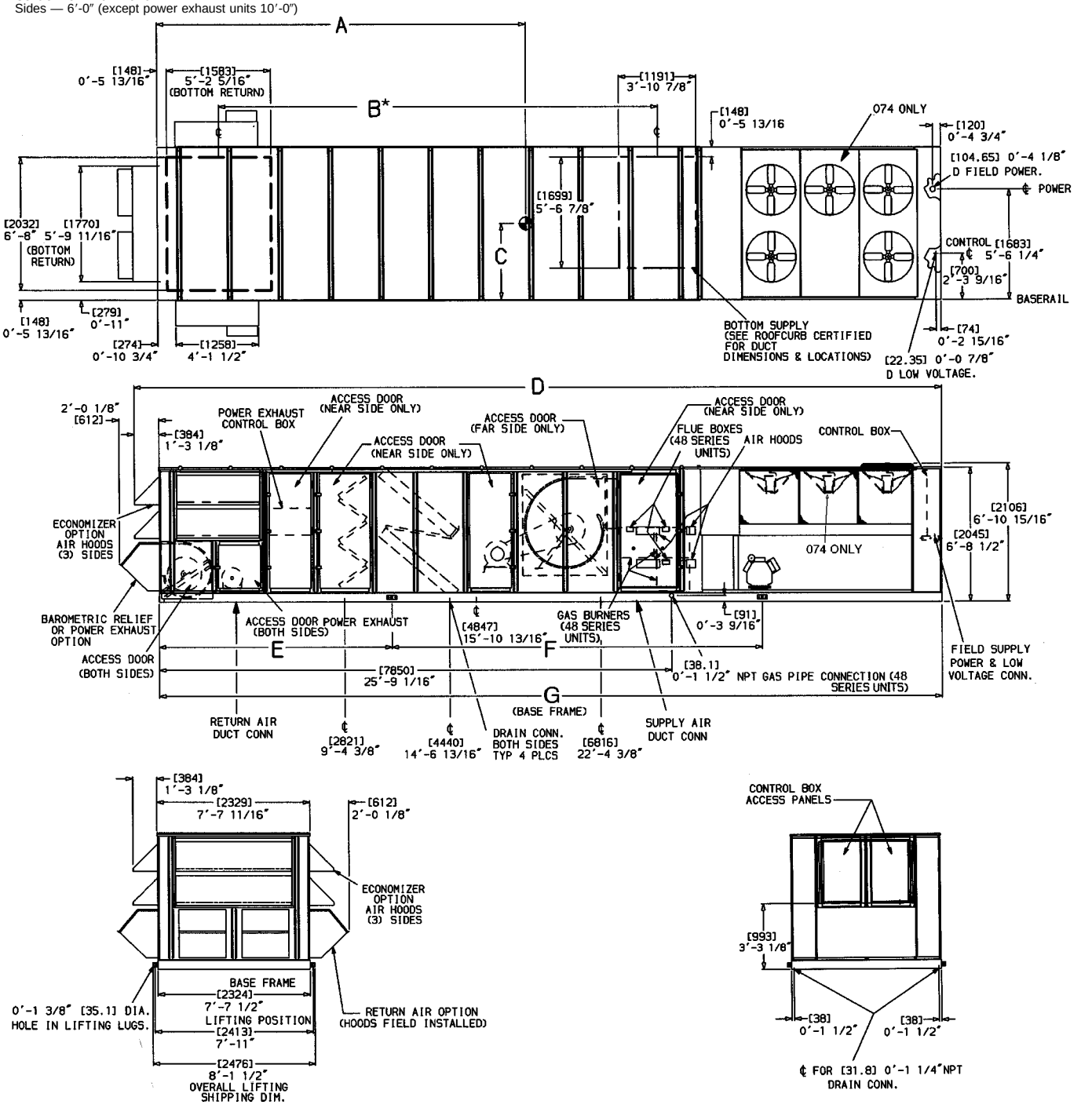

Fig. 4C — Base Unit Dimensional Drawing; 48DJ,DK,NP/50DW,DY,NB054-074 Units

UNIT	SIZE	Weight		A		B		C		D		E		F	
		Lb	Kg	mm	ft-in.	mm	ft-in.	mm	ft-in.	mm	ft-in.	mm	ft-in.	mm	ft-in.
50DJ,DK,NP	054	7700	3493	5537	18-2	1163	3-9 13/16	10,476	34-4 7/16	2864	9-4 3/4	10,092	33-1 5/16	5347	17-6 1/2
	064	8000	3629												
	074	8430	3824	5969	21-3	1163	3-9 13/16	11,385	37-4 1/4	3727	12-2 3/4	11,001	36-1 1/8	4483	14-8 1/2

LEGEND

CONN — Connection
DIM — Dimension

*Dimension shown is for 48 series units. On 50 series units, dimension given is measured from economizer end of unit to drain connection closest to condenser fans.

NOTES:

1. Dimensions in [ ] are in millimeters.
2. Center of Gravity includes economizer. Unit weight does not include economizer.
3. Unit clearances:
   Top — Do not restrict condenser fans
   Control Box End — 6′-0″
   Sides — 6′-0″ (except power exhaust units 10′-0″)
   Economizer End — 6′-0″ (except power exhaust units 10′-0″)
   For smaller service and operational clearances, contact Carrier Product Engineering Department.
4. Vertical discharge ducts designed to be attached to accessory roof curb. If unit is mounted on dunnage, support the ducts using cross braces as done on the accessory roof curb.
5. When unit is slab mounted, locate the condensate drain as low as possible on vertical face of base rail at the same location as the standard condensate drain (using factory supplied fitting). Plug factory drilled condensate hole.

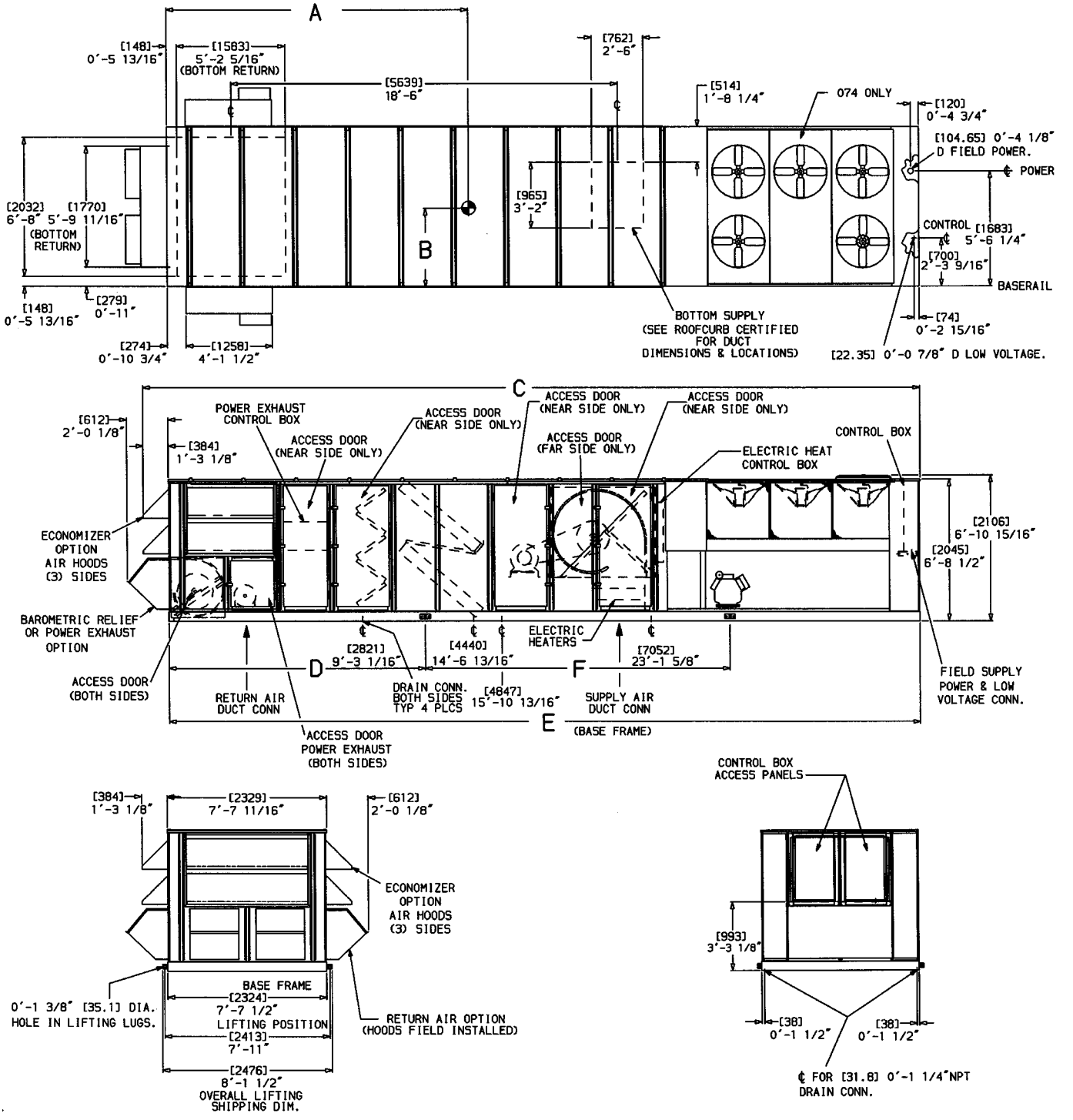

Fig. 4D — Base Unit Dimensional Drawing; 50DJ,DK,NP054-074 Units

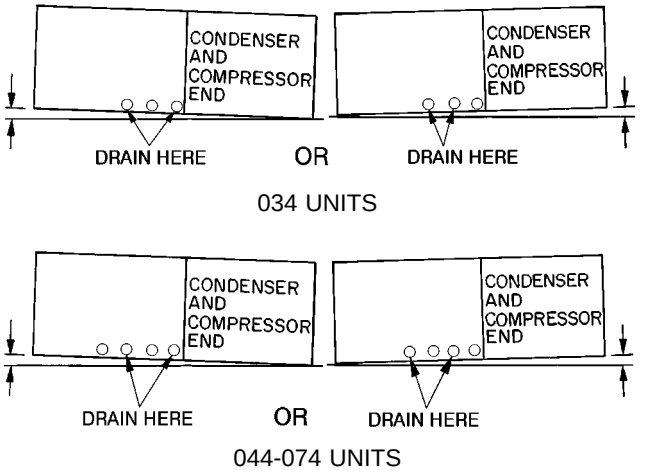

Fig. 5 — Drain Location Selection

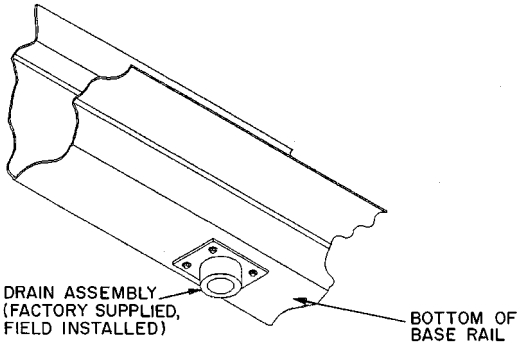

Fig. 6 — Condensate Drain Location

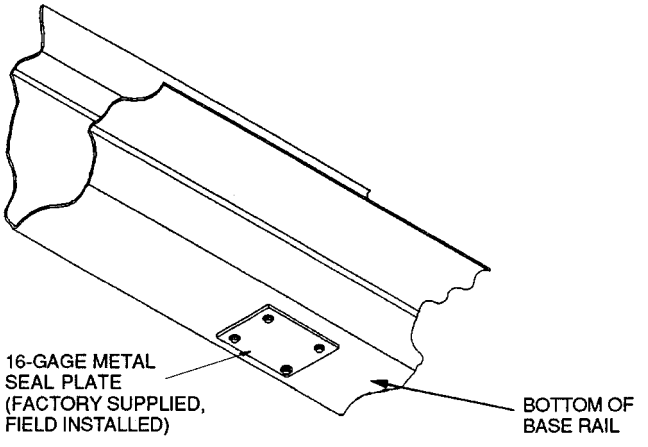

Fig. 7 — Seal Plate Location

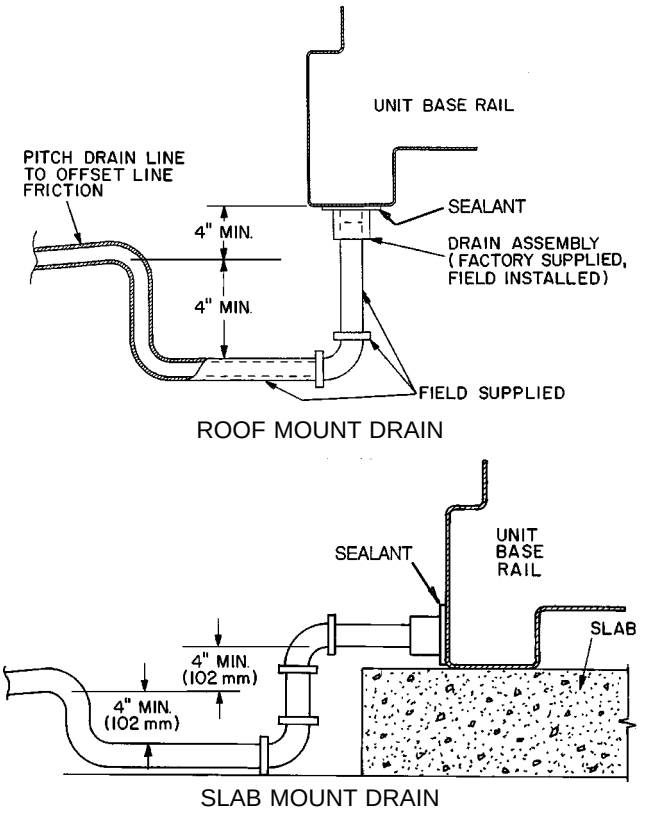

Fig. 8 — Condensate Drain Piping Details

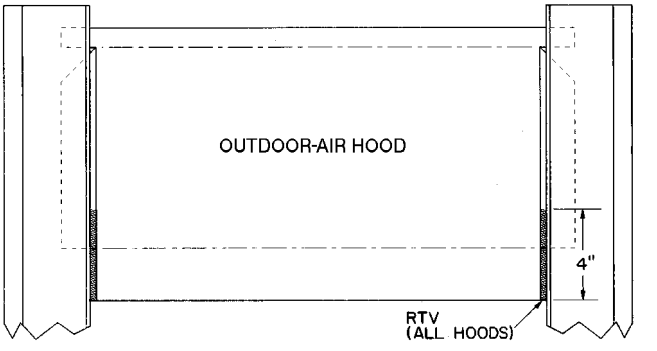

Fig. 9 — Outdoor-Air Hood

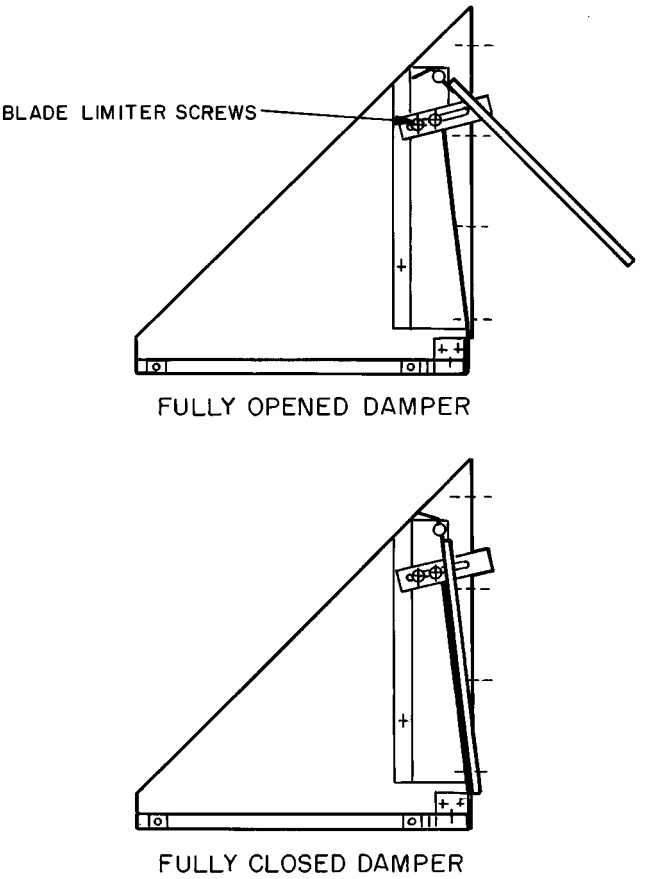

Fig. 10 — Outdoor-Air Damper Adjustments (Inside of Hood Shown)

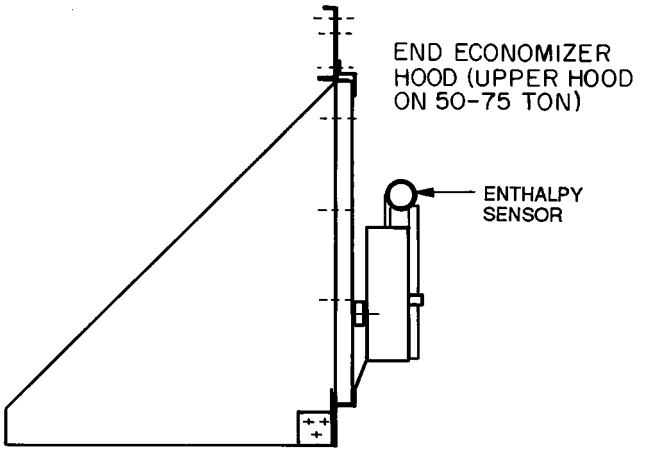

Fig. 12 — Enthalpy Sensor Location

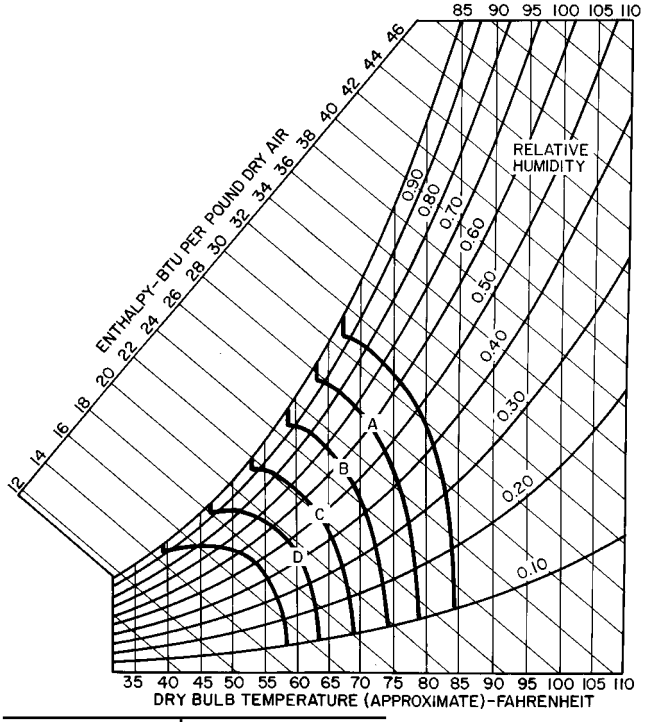

CONTROL CURVE	CONTROL POINT (Approx Deg) AT 50% RH
A	73
B	68
C	63
D	58

Fig. 13 — Psychrometric Chart for Enthalpy Control

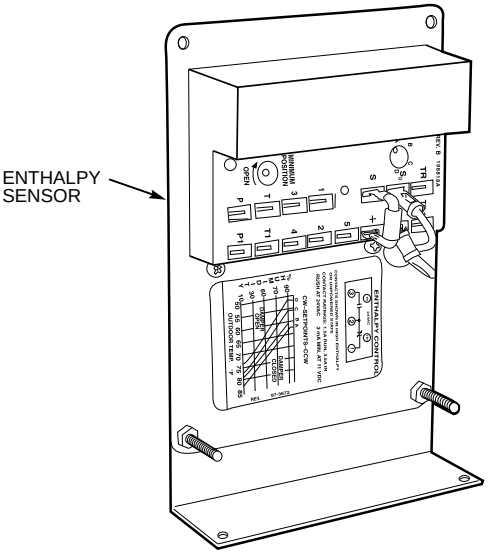

Fig. 11 — Enthalpy Sensor

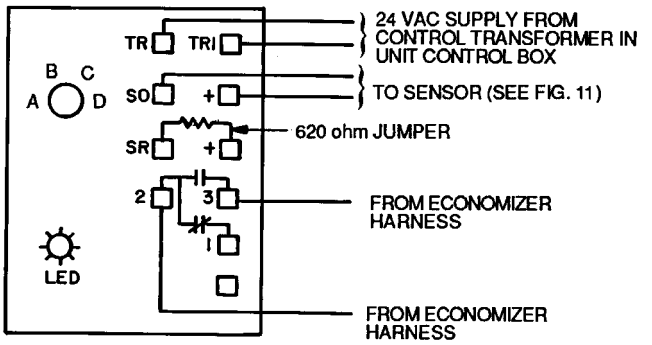

NOTES:
1. Switches shown in high enthalpy state. Terminals 2 and 3 close on enthalpy decrease.
2. When standard economizer is used with accessory differential enthalpy sensor, set enthalpy control to "D" setting.

Fig. 14 — Wiring Connections for Solid-State Enthalpy Sensor (HH57AC077)

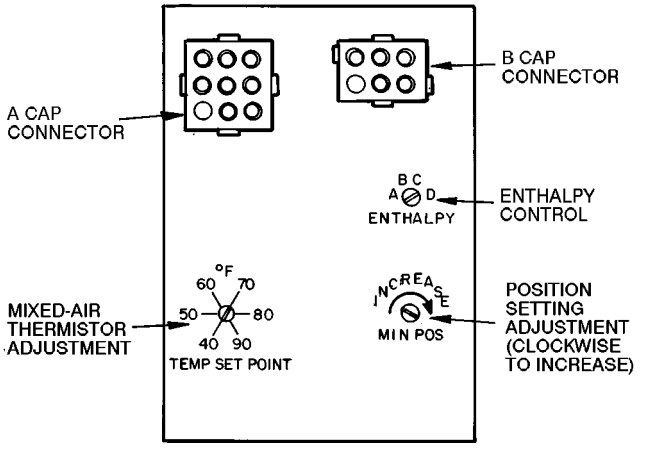

Fig. 15 — Mixed-Air Thermistor and Economizer Position Setting Adjustments (Top of Economizer Motor)

Field Wire Routing

UNIT SIZES 034 AND 044 — Field wiring can be brought into the unit through the basepan and roof curb or through the corner post in the side of the unit next to the control box.

A 3-1/2 in. NPT coupling for field power and a 3/4-in. NPT coupling for 24 v control wiring are provided in the basepan. There are two 4-5/8 in. knockouts in the corner post for field power wiring.

If field power wiring is brought through the roof curb, route wiring out through one of the 4-5/8 in. knockouts to the field-supplied disconnect and then back into the unit through the other knockout. See Fig. 16 for recommended disconnect location.

If power wiring is brought through the side of the unit, route wiring from field-supplied disconnect through top 4-5/8 in. knockouts into unit.

If control wiring is to be brought in through the side of the unit, a 7/8-in. diameter hole must be drilled in the corner post next to the control box.

UNIT SIZES 054-074 — Field wiring is brought into the unit through the bottom of the control box. Wiring can be brought through the roof curb through field-supplied water-tight connections. See Fig. 17.

A 4-5/32 in. hole for field power wiring and a 7/8-in. hole for 24 v control wiring are provided in the bottom of the control box. Field-supplied couplings must be used when routing wiring into the control box.

See Fig. 17 for recommended disconnect location.

Field Electrical Connections

IMPORTANT: The 48/50DK,DY,NB,NP units generate, use, and can radiate radio frequency energy. If units are not installed and used in accordance with these instructions, they may cause radio interference. They have been tested and found to comply with limits of a Class A computing device as defined by FCC (Federal Communications Commission) regulations, Subpart J of Part 15, which are designed to provide reasonable protection against such interference when operated in a commercial environment.

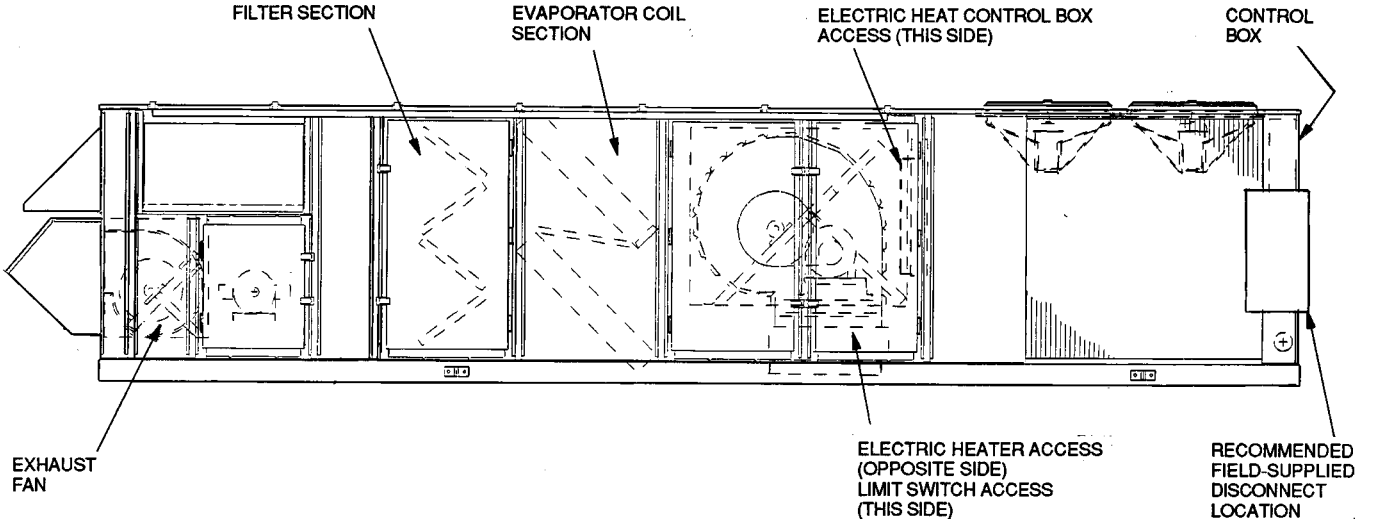

⚠ CAUTION

Use care when drilling into corner post to avoid damage to condenser coil.

Fig. 16 — Disconnect Location, 034 and 044 Units (50 Series Vertical Discharge Unit Shown)

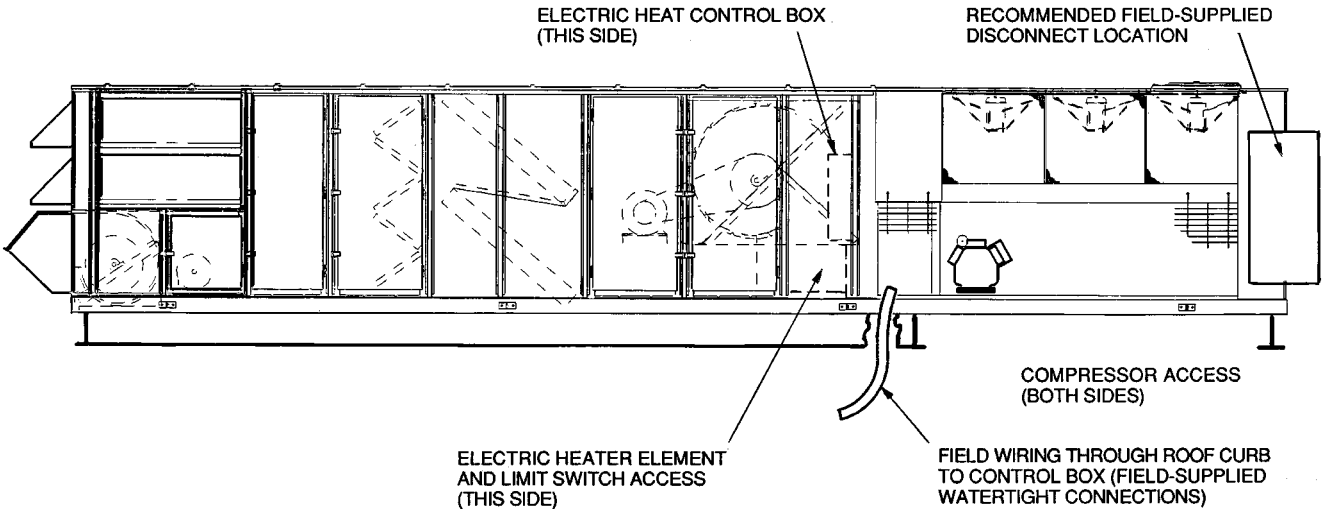

⚠ CAUTION

Use care when drilling into corner post to avoid damage to condenser coil.

Fig. 17 — Disconnect Location, 054-074 Units (50 Series Horizontal Discharge Shown)

POWER WIRING — Units are factory wired for the voltage shown on the unit nameplate. The main terminal block is suitable for use with aluminum or copper wires. Maximum wire size is 3/0 AWG (American Wire Gage).

When installing units, provide a disconnect per NEC (National Electrical Code) of adequate size (MOCP [Maximum Overcurrent Protection] of unit is on the informative plate). All field wiring must comply with NEC and all local codes. Size wire based on MCA (Minimum Circuit Amps) on the unit informative plate. See Fig. 18 for power wiring connections to the unit power terminal block and equipment ground.

Operating voltage to the compressor must be within the voltage range indicated on the unit nameplate. Voltages between phases must be balanced within 2%, and the current must be balanced within 10%. See Tables 3-7 for unit electrical data.

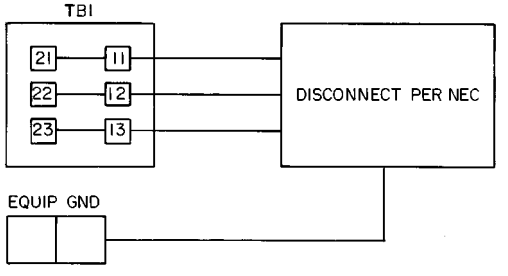

LEGEND

EQUIP — Equipment
GND — Ground
NEC — National Electrical Code
TB — Terminal Block

Fig. 18 — Field Power Wiring Connections

Use the following formula to determine the percent voltage imbalance.

$$\% \text{ Voltage Imbalance} = 100 \times \frac{\text{max voltage deviation from average voltage}}{\text{average voltage}}$$

Example: Supply voltage is 460-3-60.

AB = 452 v
BC = 464 v
AC = 455 v

$$\text{Average Voltage} = \frac{452 + 464 + 455}{3} = \frac{1371}{3} = 457$$

Determine maximum deviation from average voltage:

(AB) 457 – 452 = 5 v
(BC) 464 – 457 = 7 v
(AC) 457 – 455 = 2 v

Maximum deviation is 7 v.

Determine percent voltage imbalance:

$$\% \text{ Voltage Imbalance} = 100 \times \frac{7}{457} = 1.53\%$$

This amount of phase imbalance is satisfactory as it is below the maximum allowable 2%.

IMPORTANT: If the supply voltage phase imbalance is more than 2%, contact local utility immediately.

Unit failure as a result of operation on improper line voltage or excessive phase imbalance constitutes abuse and may cause damage to electrical components.

Table 3 — Electrical Data, 034 Units

208/230-3-60 (V-Ph-Hz)

VOLTAGE RANGE	COMPR NO. 1		COMPR NO. 2		OFM	IFM		BASE UNIT ONLY		EXHAUST FAN		ELECTRIC HEAT*		BASE UNIT WITH EXHAUST FAN AND/OR ELECTRIC HEAT*	
	RLA	LRA	RLA	LRA	Total FLA	Hp	FLA	MCA	MOCP	Total Hp	Total FLA	kW	FLA	MCA	MOCP
187-254	53.2	266.0	53.2	266.0	10.8	**7.5**	**24.2/ 22.0**	**154.7/ 152.5**	**200/ 200**	**6.0**	**21.2/20.0**	**—**	**—**	**175.9/172.5**	**225/225**
										10.0	**33.4/30.0**	**—**	**—**	**188.1/182.5**	**225/225**
										15.0	**48.4/44.0**	**—**	**—**	**203.1/196.5**	**250/225**
										—	—	29/ 36	78.9/ 91.0	154.7/152.5	200/200
										—	—	59/ 72	157.7/182.0	227.4/255.0	250/300
										—	—	88/108†	236.6/273.0	326.0/368.8	350/400
										6.0	21.2/20.0	29/ 36	78.9/ 91.0	175.9/172.5	225/225
										6.0	21.2/20.0	59/ 72	157.7/182.0	227.4/255.0	250/300
										6.0	21.2/20.0	88/108†	236.6/ 273.0	326.0/368.8	350/400
										10.0	33.4/30.0	29/ 36	78.9/ 91.0	188.1/182.5	225/225
										10.0	33.4/30.0	59/ 72	157.7/182.0	227.4/255.0	250/300
										10.0	33.4/30.0	88/108†	236.6/273.0	326.0/368.8	350/400
										15.0	48.4/44.0	29/ 36	78.9/ 91.0	203.1/196.5	250/225
										15.0	48.4/44.0	59/ 72	157.7/182.0	227.4/255.0	250/300
										15.0	48.4/44.0	88/108†	236.6/273.0	326.0/368.8	350/400
						10.0	**30.8/ 28.0**	**161.3/ 158.5**	**200/ 200**	**6.0**	**21.2/20.0**	**—**	**—**	**182.5/178.5**	**225/225**
										10.0	**33.4/30.0**	**—**	**—**	**194.7/188.5**	**225/225**
										15.0	**48.4/44.0**	**—**	**—**	**209.7/202.5**	**250/250**
										—	—	29/ 36	78.9/ 91.0	161.3/158.5	200/200
										—	—	59/ 72	157.7/182.0	235.6/262.5	250/300
										—	—	88/108†	236.6/273.0	334.2/376.3	350/400
										6.0	21.2/20.0	29/ 36	78.9/ 91.0	182.5/178.5	225/225
										6.0	21.2/20.0	59/ 72	157.7/182.0	235.6/262.5	250/300
										6.0	21.2/20.0	88/108†	236.6/273.0	334.2/376.3	350/400
										10.0	33.4/30.0	29/ 36	78.9/ 91.0	194.7/188.5	225/225
										10.0	33.4/30.0	59/ 72	157.7/182.0	235.6/262.5	250/300
										10.0	33.4/30.0	88/108	236.6/273.0	334.2/376.3	350/400
										15.0	48.4/44.0	29/ 36	78.9/ 91.0	209.7/202.5	250/250
										15.0	48.4/44.0	59/ 72	157.7/182.0	235.6/262.5	250/300
										15.0	48.4/44.0	88/108†	236.6/273.0	334.2/376.3	350/400
						15.0	**46.2/ 42.0**	**176.7/ 172.5**	**225/ 225**	**6.0**	**21.2/20.0**	**—**	**—**	**197.9/192.5**	**250/225**
										10.0	**33.4/30.0**	**—**	**—**	**210.1/202.5**	**250/250**
										15.0	**48.4/44.0**	**—**	**—**	**225.1/216.5**	**250/250**
										—	—	29/ 36	78.9/ 91.0	176.7/172.5	250/250
										—	—	59/ 72	157.7/182.0	254.9/280.0	300/350
										—	—	88/108†	236.6/273.0	353.5/393.8	400/400
										6.0	21.2/20.0	29/ 36	78.9/ 91.0	197.9/192.5	250/250
										6.0	21.2/20.0	59/ 72	157.7/182.0	254.9/280.0	300/350
										6.0	21.2/20.0	88/108†	236.6/273.0	353.5/393.8	400/400
										10.0	33.4/30.0	29/ 36	78.9/ 91.0	210.1/202.5	250/250
										10.0	33.4/30.0	59/ 72	157.7/182.0	254.9/280.0	300/350
										10.0	33.4/30.0	88/108	236.6/273.0	353.5/393.8	400/400
										15.0	48.4/44.0	29/ 36	78.9/ 91.0	225.1/216.5	250/250
										15.0	48.4/44.0	59/ 72	157.7/182.0	254.9/280.0	300/350
										15.0	48.4/44.0	88/108†	236.6/273.0	353.5/393.8	400/400
						20.0	**59.4/ 54.0**	**191.4/ 184.7**	**250/ 225**	**6.0**	**21.2/20.0**	**—**	**—**	**212.6/204.7**	**250/250**
										10.0	**33.4/30.0**	**—**	**—**	**224.8/214.7**	**250/250**
										15.0	**48.4/44.0**	**—**	**—**	**239.9/228.7**	**250/250**
										—	—	29/ 36	78.9/ 91.0	191.4/184.7	300/300
										—	—	59/ 72	157.7/182.0	271.4/295.0	350/350
										—	—	88/108†	236.6/273.0	370.0/408.8	450/450
										6.0	21.2/20.0	29/ 36	78.9/ 91.0	212.6/204.7	300/300
										6.0	21.2/20.0	59/ 72	157.7/182.0	271.4/295.0	350/350
										6.0	21.2/20.0	88/108†	236.6/273.0	370.0/408.8	450/450
										10.0	33.4/30.0	29/ 36	78.9/ 91.0	224.8/214.7	300/300
										10.0	33.4/30.0	59/ 72	157.7/182.0	271.4/295.0	350/350
										10.0	33.4/30.0	88/108†	236.6/273.0	370.0/408.8	450/450
										15.0	48.4/44.0	29/ 36	78.9/ 91.0	239.9/228.7	300/300
										15.0	48.4/44.0	59/ 72	157.7/182.0	271.4/295.0	350/350
										15.0	48.4/44.0	88/108†	236.6/273.0	370.0/408.8	450/450

LEGEND

CV — Constant Volume
ETL — ETL Testing Laboratory
FLA — Full Load Amps
Hp — Nominal Horsepower
IFM — Indoor (Evaporator) Fan Motor
LRA — Locked Rotor Amps
MCA — Minimum Circuit Amps (for wire sizing)
MOCP — Maximum Overcurrent Protection
OFM — Outdoor (Condenser) Fan Motor
RLA — Rated Load Amps

*Electric heat available on 50 Series vertical discharge units.
†108 kW available on CV applications only.

NOTES:

1. Electric resistance heaters are rated at 208/240 v, 480 v, or 575 v. To determine heater capacity (kW) at unit operating voltage, multiply 240 v, 480 v, or 575 v capacity by appropriate multiplier below.

MULTIPLICATION FACTORS

HEATER kW RATING	VOLTAGE DISTRIBUTION V-3-60	MULTIPLICATION FACTOR
240	200	0.694
	208	0.751
	230	0.918
	240	1.000
480	440	0.840
	460	0.918
	480	1.000
575	550	0.915
	575	1.000
	600	1.089

Electric heaters are tested and ETL approved at maximum total external static pressure of 1.9 in. wg.

2. **Boldface** indicates 48 and 50 Series units. All other data is for 50 Series units only.

Table 3 — Electrical Data, 034 Units (cont)

460-3-60 (V-Ph-Hz)

VOLTAGE RANGE	COMPR NO. 1		COMPR NO. 2		OFM	IFM		BASE UNIT ONLY		EXHAUST FAN		ELECTRIC HEAT*		BASE UNIT WITH EXHAUST FAN AND/OR ELECTRIC HEAT*	
	RLA	LRA	RLA	LRA	Total FLA	Hp	FLA	MCA	MOCP	Total Hp	Total FLA	kW	FLA	MCA	MOCP
414-508	28.8	120.0	28.8	120.0	5.4	7.5	11.0	81.2	100	**6.0**	**9.6**	**—**	**—**	**90.8**	**110**
										10.0	**15.2**	**—**	**—**	**96.4**	**125**
										15.0	**22.0**	**—**	**—**	**103.2**	**125**
										—	—	36	46.3	81.2	100
										—	—	72	93.0	130.0	150
										—	—	108†	139.0	187.5	200
										6.0	9.6	36	46.3	90.8	110
										6.0	9.6	72	93.0	130.0	150
										6.0	9.6	108†	139.0	187.5	200
										10.0	15.2	36	46.3	96.4	125
										10.0	15.2	72	93.0	130.0	150
										10.0	15.2	108†	139.0	187.5	200
										15.0	22.0	36	46.3	103.2	125
										15.0	22.0	72	93.0	130.0	150
										15.0	22.0	108†	139.0	187.5	200
						10.0	14.0	84.2	110	**6.0**	**9.6**	**—**	**—**	**93.8**	**110**
										10.0	**15.2**	**—**	**—**	**99.4**	**125**
										15.0	**22.0**	**—**	**—**	**106.2**	**125**
										—	—	36	46.3	84.2	110
										—	—	72	93.0	133.7	150
										—	—	108†	139.0	191.2	200
										6.0	9.6	36	46.3	93.8	110
										6.0	9.6	72	93.0	133.7	150
										6.0	9.6	108†	139.0	191.2	200
										10.0	15.2	36	46.3	99.4	125
										10.0	15.2	72	93.0	133.7	150
										10.0	15.2	108†	139.0	191.2	200
										15.0	22.0	36	46.3	106.2	125
										15.0	22.0	72	93.0	133.7	150
										15.0	22.0	108†	139.0	191.2	200
						15.0	21.0	91.2	110	**6.0**	**9.6**	**—**	**—**	**100.8**	**125**
										10.0	**15.2**	**—**	**—**	**106.4**	**125**
										15.0	**22.0**	**—**	**—**	**113.2**	**125**
										—	—	36	46.3	91.2	125
										—	—	72	93.0	142.5	175
										—	—	108†	139.0	200.0	200
										6.0	9.6	36	46.3	100.8	125
										6.0	9.6	72	93.0	142.5	175
										6.0	9.6	108†	139.0	200.0	200
										10.0	15.2	36	46.3	106.4	125
										10.0	15.2	72	93.0	142.5	175
										10.0	15.2	108†	139.0	200.0	200
										15.0	22.0	36	46.3	113.2	125
										15.0	22.0	72	93.0	142.5	175
										15.0	22.0	108†	139.0	200.0	200
						20.0	27.0	97.2	125	**6.0**	**9.6**	**—**	**—**	**106.8**	**125**
										10.0	**15.2**	**—**	**—**	**112.4**	**125**
										15.0	**22.0**	**—**	**—**	**119.2**	**125**
										—	—	36	46.3	97.2	150
										—	—	72	93.0	150.0	200
										—	—	108†	139.0	207.5	225
										6.0	9.6	36	46.3	106.8	150
										6.0	9.6	72	93.0	150.0	200
										6.0	9.6	108†	139.0	207.5	225
										10.0	15.2	36	46.3	112.4	150
										10.0	15.2	72	93.0	150.0	200
										10.0	15.2	108†	139.0	207.5	225
										15.0	22.0	36	46.3	119.2	150
										15.0	22.0	72	93.0	150.0	200
										15.0	22.0	108†	139.0	207.5	225

Table 3 — Electrical Data, 034 Units (cont)

575-3-60 (V-Ph-Hz)

VOLTAGE RANGE	COMPR NO. 1		COMPR NO. 2		OFM	IFM		BASE UNIT ONLY		EXHAUST FAN		ELECTRIC HEAT*		BASE UNIT WITH EXHAUST FAN AND/OR ELECTRIC HEAT*	
	RLA	LRA	RLA	LRA	Total FLA	Hp	FLA	MCA	MOCP	Total Hp	Total FLA	kW	FLA	MCA	MOCP
518-632	23.1	96.0	23.1	96.0	4.8	7.5	9.0	65.8	80	**6.0**	**7.8**	**—**	**—**	**73.6**	**90**
										10.0	**12.2**	**—**	**—**	**78.0**	**100**
										15.0	**18.0**	**—**	**—**	**83.8**	**100**
										—	—	36	36.0	65.8	80
										—	—	72	72.0	101.3	110
										—	—	108†	108.0	146.2	150
										6.0	7.8	36	36.0	73.6	90
										6.0	7.8	72	72.0	101.3	110
										6.0	7.8	108†	108.0	146.2	150
										10.0	12.2	36	36.0	78.0	100
										10.0	12.2	72	72.0	101.3	110
										10.0	12.2	108†	108.0	146.2	150
										15.0	18.0	36	36.0	83.8	100
										15.0	18.0	72	72.0	101.3	110
										15.0	18.0	108†	108.0	146.2	150
						10.0	11.0	67.8	90	**6.0**	**7.8**	**—**	**—**	**75.6**	**90**
										10.0	**12.2**	**—**	**—**	**80.0**	**100**
										15.0	**18.0**	**—**	**—**	**85.8**	**100**
										—	—	36	36.0	67.8	90
										—	—	72	72.0	103.7	110
										—	—	108†	108.0	148.7	150
										6.0	7.8	36	36.0	75.6	90
										6.0	7.8	72	72.0	103.7	110
										6.0	7.8	108†	108.0	148.7	150
										10.0	12.2	36	36.0	80.0	100
										10.0	12.2	72	72.0	103.7	110
										10.0	12.2	108†	108.0	148.7	150
										15.0	18.0	36	36.0	85.8	100
										15.0	18.0	72	72.0	103.7	110
										15.0	18.0	108†	108.0	148.7	150
						15.0	17.0	73.8	90	**6.0**	**7.8**	**—**	**—**	**81.6**	**100**
										10.0	**12.2**	**—**	**—**	**86.0**	**100**
										15.0	**18.0**	**—**	**—**	**91.8**	**110**
										—	—	36	36.0	73.8	100
										—	—	72	72.0	111.2	125
										—	—	108†	108.0	156.2	175
										6.0	7.8	36	36.0	81.6	100
										6.0	7.8	72	72.0	111.2	125
										6.0	7.8	108†	108.0	156.2	175
										10.0	12.2	36	36.0	86.0	100
										10.0	12.2	72	72.0	111.2	125
										10.0	12.2	108†	108.0	156.2	175
										15.0	18.0	36	36.0	91.8	110
										15.0	18.0	72	72.0	111.2	125
										15.0	18.0	108†	108.0	156.2	175
						20.0	22.0	78.8	100	**6.0**	**7.8**	**—**	**—**	**86.6**	**100**
										10.0	**12.2**	**—**	**—**	**91.0**	**110**
										15.0	**18.0**	**—**	**—**	**96.8**	**110**
										—	—	36	36.0	78.8	110
										—	—	72	72.0	117.5	150
										—	—	108†	108.0	162.5	175
										6.0	7.8	36	36.0	86.6	110
										6.0	7.8	72	72.0	117.5	150
										6.0	7.8	108†	108.0	162.5	175
										10.0	12.2	36	36.0	91.0	110
										10.0	12.2	72	72.0	117.5	150
										10.0	12.2	108†	108.0	162.5	175
										15.0	18.0	36	36.0	96.8	110
										15.0	18.0	72	72.0	117.5	150
										15.0	18.0	108†	108.0	162.5	175

LEGEND

CV — Constant Volume
ETL — ETL Testing Laboratory
FLA — Full Load Amps
Hp — Nominal Horsepower
IFM — Indoor (Evaporator) Fan Motor
LRA — Locked Rotor Amps
MCA — Minimum Circuit Amps (for wire sizing)
MOCP — Maximum Overcurrent Protection
OFM — Outdoor (Condenser) Fan Motor
RLA — Rated Load Amps

*Electric heat available on 50 Series vertical discharge units.
†108 kW available on CV applications only.

NOTES:

1. Electric resistance heaters are rated at 208/240 v, 480 v, or 575 v. To determine heater capacity (kW) at unit operating voltage, multiply 240 v, 480 v, or 575 v capacity by appropriate multiplier below.

MULTIPLICATION FACTORS

HEATER kW RATING	VOLTAGE DISTRIBUTION V-3-60	MULTIPLICATION FACTOR
240	200	0.694
	208	0.751
	230	0.918
	240	1.000
480	440	0.840
	460	0.918
	480	1.000
575	550	0.915
	575	1.000
	600	1.089

Electric heaters are tested and ETL approved at maximum total external static pressure of 1.9 in. wg.

2. **Boldface** indicates 48 and 50 Series units. All other data is for 50 Series units only.

Table 4 — Electrical Data, 044 Units

208/230-3-60 (V-Ph-Hz)

VOLTAGE RANGE	COMPR NO. 1		COMPR NO. 2		OFM	IFM		BASE UNIT ONLY		EXHAUST FAN		ELECTRIC HEAT*		BASE UNIT WITH EXHAUST FAN AND/OR ELECTRIC HEAT*	
	RLA	LRA	RLA	LRA	Total FLA	Hp	FLA	MCA	MOCP	Total Hp	Total FLA	kW	FLA	MCA	MOCP
187-254	69.2	345.0	69.2	345.0	16.2	7.5	24.2/ 22.0	196.1/ 193.9	250/ 250	**6.0**	**21.2/20.0**	**—**	**—**	**217.3/213.9**	**250/250**
										10.0	**33.4/30.0**	**—**	**—**	**229.5/223.9**	**250/250**
										15.0	**48.4/44.0**	**—**	**—**	**244.5/237.9**	**300/300**
										—	—	29/ 35	78.9/ 91.0	196.1/193.9	250/250
										—	—	59/ 72	157.7/182.0	227.4/255.0	250/300
										—	—	88/108†	236.6/273.0	326.0/368.8	350/400
										6.0	21.2/20.0	29/ 36	78.9/ 91.0	217.3/213.9	250/250
										6.0	21.2/20.0	59/ 72	157.7/182.0	227.4/255.0	250/300
										6.0	21.2/20.0	88/108†	236.6/273.0	326.0/368.8	350/400
										10.0	33.4/30.0	29/ 36	78.9/ 91.0	229.5/223.9	250/250
										10.0	33.4/30.0	59/ 72	157.7/182.0	229.5/255.0	250/300
										10.0	33.4/30.0	88/108†	236.6/273.0	326.0/368.8	350/400
										15.0	48.4/44.0	29/ 36	78.9/ 91.0	244.5/237.9	300/300
										15.0	48.4/44.0	59/ 72	157.7/182.0	244.5/255.0	300/300
										15.0	48.4/44.0	88/108†	236.6/273.0	326.0/368.8	350/400
						10.0	30.8/ 28.0	202.7/ 199.9	250/ 250	**6.0**	**21.2/20.0**	**—**	**—**	**223.9/219.9**	**250/250**
										10.0	**33.4/30.0**	**—**	**—**	**236.1/229.9**	**300/250**
										15.0	**48.4/44.0**	**—**	**—**	**251.1/243.9**	**300/300**
										—	—	29/ 36	78.9/ 91.0	202.7/199.9	250/250
										—	—	59/ 72	157.7/182.0	235.6/262.5	250/300
										—	—	88/108†	236.6/273.0	334.2/376.3	350/400
										6.0	21.2/20.0	29/ 36	78.9/ 91.0	223.9/219.9	250/250
										6.0	21.2/20.0	59/ 72	157.7/182.0	235.6/262.5	250/300
										6.0	21.2/20.0	88/108†	236.6/273.0	334.2/376.3	350/400
										10.0	33.4/30.0	29/ 36	78.9/ 91.0	236.1/229.9	300/250
										10.0	33.4/30.0	59/ 72	157.7/182.0	236.1/262.5	300/300
										10.0	33.4/30.0	88/108†	236.6/273.0	334.2/376.3	350/400
										15.0	48.4/44.0	29/ 36	78.9/ 91.0	251.1/243.9	300/300
										15.0	48.4/44.0	59/ 72	157.7/182.0	251.1/262.5	300/300
										15.0	48.4/44.0	88/108†	236.6/273.0	334.2/376.3	350/400
						15.0	46.2/ 42.0	218.1/ 213.9	250/ 250	**6.0**	**21.2/20.0**	**—**	**—**	**239.3/233.9**	**300/300**
										10.0	**33.4/30.0**	**—**	**—**	**251.5/243.9**	**300/300**
										15.0	**48.4/44.0**	**—**	**—**	**266.5/257.9**	**300/300**
										—	—	29/ 36	78.9/ 91.0	218.1/213.9	250/250
										—	—	59/ 72	157.7/182.0	254.9/280.0	300/350
										—	—	88/108†	236.6/273.0	353.5/393.8	400/400
										6.0	21.2/20.0	29/ 36	78.9/ 91.0	239.3/233.9	300/300
										6.0	21.2/20.0	59/ 72	157.7/182.0	254.9/280.0	300/350
										6.0	21.2/20.0	88/108†	236.6/273.0	353.5/393.8	400/400
										10.0	33.4/30.0	29/ 36	78.9/ 91.0	251.5/243.9	300/300
										10.0	33.4/30.0	59/ 72	157.7/182.0	254.9/280.0	300/350
										10.0	33.4/30.0	88/108†	236.6/273.0	353.5/393.8	400/400
										15.0	48.4/44.0	29/ 36	78.9/ 91.0	266.5/257.9	300/300
										15.0	48.4/44.0	59/ 72	157.7/182.0	266.5/280.0	300/350
										15.0	48.4/44.0	88/108†	236.6/273.0	353.5/393.8	400/400
						20.0	59.4/ 54.0	231.3/ 225.9	300/ 250	**6.0**	**21.2/20.0**	**—**	**—**	**252.5/245.9**	**300/300**
										10.0	**33.4/30.0**	**—**	**—**	**264.7/255.9**	**300/300**
										15.0	**48.4/44.0**	**—**	**—**	**279.7/269.9**	**300/300**
										—	—	29/ 36	78.9/ 91.0	231.3/225.9	300/300
										—	—	59/ 72	157.7/182.0	271.4/295.0	350/350
										—	—	88/108†	236.6/273.0	370.0/408.8	450/450
										6.0	21.2/20.0	29/ 36	78.9/ 91.0	252.5/245.9	300/300
										6.0	21.2/20.0	59/ 72	157.7/182.0	271.4/295.0	350/350
										6.0	21.2/20.0	88/108†	236.6/273.0	370.0/408.8	450/450
										10.0	33.4/30.0	29/ 36	78.9/ 91.0	264.7/255.9	300/300
										10.0	33.4/30.0	59/ 72	157.7/182.0	271.4/295.0	350/350
										10.0	33.4/30.0	88/108†	236.6/273.0	370.0/408.8	450/450
										15.0	48.4/44.0	29/ 36	78.9/ 91.0	279.7/269.9	300/300
										15.0	48.4/44.0	59/ 72	157.7/182.0	279.7/295.0	350/350
										15.0	48.4/44.0	88/108†	236.6/273.0	370.0/408.8	450/450

Table 4 — Electrical Data, 044 Units (cont)

460-3-60 (V-Ph-Hz)

VOLTAGE RANGE	COMPR NO. 1		COMPR NO. 2		OFM	IFM		BASE UNIT ONLY		EXHAUST FAN		ELECTRIC HEAT*		BASE UNIT WITH EXHAUST FAN AND/OR ELECTRIC HEAT*	
	RLA	LRA	RLA	LRA	Total FLA	Hp	FLA	MCA	MOCP	Total Hp	Total FLA	kW	FLA	MCA	MOCP
414-508	34.6	173.0	34.6	173.0	8.1	7.5	11.0	96.9	125	**6.0**	**9.6**	**—**	**—**	**106.5**	**125**
										10.0	**15.2**	**—**	**—**	**112.1**	**125**
										15.0	**22.0**	**—**	**—**	**118.9**	**150**
										—	—	36	46.3	96.9	125
										—	—	72	93.0	130.0	150
										—	—	108†	139.0	187.5	200
										6.0	9.6	36	46.3	106.5	125
										6.0	9.6	72	93.0	130.0	150
										6.0	9.6	108†	139.0	187.5	200
										10.0	15.2	36	46.3	112.1	125
										10.0	15.2	72	93.0	130.0	150
										10.0	15.2	108†	139.0	187.5	200
										15.0	22.0	36	46.3	118.9	150
										15.0	22.0	72	93.0	130.0	150
										15.0	22.0	108†	139.0	187.5	200
						10.0	14.0	99.9	125	**6.0**	**9.6**	**—**	**—**	**109.5**	**125**
										10.0	**15.2**	**—**	**—**	**115.1**	**125**
										15.0	**22.0**	**—**	**—**	**121.9**	**150**
										—	—	36	46.3	99.9	125
										—	—	72	93.0	133.7	150
										—	—	108†	139.0	191.2	200
										6.0	9.6	36	46.3	109.5	125
										6.0	9.6	72	93.0	133.7	150
										6.0	9.6	108†	139.0	191.2	200
										10.0	15.2	36	46.3	115.1	125
										10.0	15.2	72	93.0	133.7	150
										10.0	15.2	108†	139.0	191.2	200
										15.0	22.0	36	46.3	121.9	150
										15.0	22.0	72	93.0	133.7	150
										15.0	22.0	108†	139.0	191.2	200
						15.0	21.0	106.9	125	**6.0**	**9.6**	**—**	**—**	**116.5**	**150**
										10.0	**15.2**	**—**	**—**	**122.1**	**150**
										15.0	**22.0**	**—**	**—**	**128.9**	**150**
										—	—	36	46.3	106.9	125
										—	—	72	93.0	142.5	175
										—	—	108†	139.0	200.0	200
										6.0	9.6	36	46.3	116.5	150
										6.0	9.6	72	93.0	142.5	175
										6.0	9.6	108†	139.0	200.0	200
										10.0	15.2	36	46.3	122.1	150
										10.0	15.2	72	93.0	142.5	175
										10.0	15.2	108†	139.0	200.0	200
										15.0	22.0	36	46.3	128.9	150
										15.0	22.0	72	93.0	142.5	175
										15.0	22.0	108†	139.0	200.0	200
						20.0	27.0	112.9	125	**6.0**	**9.6**	**—**	**—**	**122.5**	**150**
										10.0	**15.2**	**—**	**—**	**128.1**	**150**
										15.0	**22.0**	**—**	**—**	**134.9**	**150**
										—	—	36	46.3	112.9	150
										—	—	72	93.0	150.0	200
										—	—	108†	139.0	207.5	225
										6.0	9.6	36	46.3	122.5	150
										6.0	9.6	72	93.0	150.0	200
										6.0	9.6	108†	139.0	207.5	225
										10.0	15.2	36	46.3	128.1	150
										10.0	15.2	72	93.0	150.0	200
										10.0	15.2	108†	139.0	207.5	225
										15.0	22.0	36	46.3	134.9	150
										15.0	22.0	72	93.0	150.0	200
										15.0	22.0	108†	139.0	207.5	225

LEGEND

CV — Constant Volume
ETL — ETL Testing Laboratory
FLA — Full Load Amps
Hp — Nominal Horsepower
IFM — Indoor (Evaporator) Fan Motor
LRA — Locked Rotor Amps
MCA — Minimum Circuit Amps (for wire sizing)
MOCP — Maximum Overcurrent Protection
OFM — Outdoor (Condenser) Fan Motor
RLA — Rated Load Amps

*Electric heat available on 50 Series vertical discharge units.
†108 kW available on CV applications only.

NOTES:

1. Electric resistance heaters are rated at 208/240 v, 480 v, or 575 v. To determine heater capacity (kW) at unit operating voltage, multiply 240 v, 480 v, or 575 v capacity by appropriate multiplier below.

MULTIPLICATION FACTORS

HEATER kW RATING	VOLTAGE DISTRIBUTION V-3-60	MULTIPLICATION FACTOR
240	200	0.694
	208	0.751
	230	0.918
	240	1.000
480	440	0.840
	460	0.918
	480	1.000
575	550	0.915
	575	1.000
	600	1.089

Electric heaters are tested and ETL approved at maximum total external static pressure of 1.9 in. wg.

2. **Boldface** indicates 48 and 50 Series units. All other data is for 50 Series units only.

Table 4 — Electrical Data, 044 Units (cont)

575-3-60 (V-Ph-Hz)

VOLTAGE RANGE	COMPR NO. 1		COMPR NO. 2		OFM	IFM		BASE UNIT ONLY		EXHAUST FAN		ELECTRIC HEAT*		BASE UNIT WITH EXHAUST FAN AND/OR ELECTRIC HEAT*	
	RLA	LRA	RLA	LRA	Total FLA	Hp	FLA	MCA	MOCP	Total Hp	Total FLA	kW	FLA	MCA	MOCP
518-632	26.7	120.0	26.7	120.0	7.2	7.5	9.0	76.3	100	**6.0**	**7.8**	**—**	**—**	**84.1**	**110**
										10.0	**12.2**	**—**	**—**	**88.5**	**110**
										15.0	**18.0**	**—**	**—**	**94.3**	**110**
										—	—	36	36.0	76.3	100
										—	—	72	72.0	101.3	110
										—	—	108†	108.0	146.2	150
										6.0	7.8	36	36.0	84.1	110
										6.0	7.8	72	72.0	101.3	110
										6.0	7.8	108†	108.0	146.2	150
										10.0	12.2	36	36.0	88.5	110
										10.0	12.2	72	72.0	101.3	110
										10.0	12.2	108†	108.0	146.2	150
										15.0	18.0	36	36.0	94.3	110
										15.0	18.0	72	72.0	101.3	110
										15.0	18.0	108†	108.0	146.2	150
						10.0	11.0	78.3	100	**6.0**	**7.8**	**—**	**—**	**86.1**	**110**
										10.0	**12.2**	**—**	**—**	**90.5**	**110**
										15.0	**18.0**	**—**	**—**	**96.3**	**110**
										—	—	36	36.0	78.3	100
										—	—	72	72.0	103.7	110
										—	—	108†	108.0	148.7	150
										6.0	7.8	36	36.0	86.1	110
										6.0	7.8	72	72.0	103.7	110
										6.0	7.8	108†	108.0	148.7	150
										10.0	12.2	36	36.0	90.5	110
										10.0	12.2	72	72.0	103.7	110
										10.0	12.2	108†	108.0	148.7	150
										15.0	18.0	36	36.0	96.3	110
										15.0	18.0	72	72.0	103.7	110
										15.0	18.0	108†	108.0	148.7	150
						15.0	17.0	84.3	110	**6.0**	**7.8**	**—**	**—**	**92.1**	**110**
										10.0	**12.2**	**—**	**—**	**96.5**	**110**
										15.0	**18.0**	**—**	**—**	**102.3**	**125**
										—	—	36	36.0	84.3	110
										—	—	72	72.0	111.2	125
										—	—	108†	108.0	156.2	175
										6.0	7.8	36	36.0	92.1	110
										6.0	7.8	72	72.0	111.2	125
										6.0	7.8	108†	108.0	156.2	175
										10.0	12.2	36	36.0	96.5	110
										10.0	12.2	72	72.0	111.2	125
										10.0	12.2	108†	108.0	156.2	175
										15.0	18.0	36	36.0	102.3	125
										15.0	18.0	72	72.0	111.2	125
										15.0	18.0	108†	108.0	156.2	175
						20.0	22.0	89.3	110	**6.0**	**7.8**	**—**	**—**	**97.1**	**110**
										10.0	**12.2**	**—**	**—**	**101.5**	**125**
										15.0	**18.0**	**—**	**—**	**107.3**	**125**
										—	—	36	36.0	89.3	110
										—	—	72	72.0	117.5	150
										—	—	108†	108.0	162.5	175
										6.0	7.8	36	36.0	97.1	110
										6.0	7.8	72	72.0	117.5	150
										6.0	7.8	108†	108.0	162.5	175
										10.0	12.2	36	36.0	101.5	125
										10.0	12.2	72	72.0	117.5	150
										10.0	12.2	108†	108.0	162.5	175
										15.0	18.0	36	36.0	107.3	125
										15.0	18.0	72	72.0	117.5	150
										15.0	18.0	108†	108.0	162.5	175

Table 5 — Electrical Data, 054 Units

208/230-3-60 (V-Ph-Hz)

VOLTAGE RANGE	COMPR NO. 1		COMPR NO. 2		OFM	IFM		BASE UNIT ONLY		EXHAUST FAN		ELECTRIC HEAT*		BASE UNIT WITH EXHAUST FAN AND/OR ELECTRIC HEAT*	
	RLA	LRA	RLA	LRA	Total FLA	Hp	FLA	MCA	MOCP	Total Hp	Total FLA	kW	FLA	MCA	MOCP
187-254	107.7	506.0	74.4	345.0	21.6	15.0	46.2/ 42.0	276.8/ 272.6	350/ 350	**10.0**	**33.4/30.4**	**—**	**—**	**310.2/303.0**	**400/400**
										15.0	**48.4/44.0**	**—**	**—**	**325.2/316.6**	**400/400**
										20.0	**61.6/56.0**	**—**	**—**	**338.4/238.6**	**400/400**
										—	—	29/ 36	78.9/ 91.0	276.8/272.6	350/350
										—	—	59/ 72	157.7/182.0	276.8/280.0	350/350
										—	—	88/108†	236.6/273.0	353.5/393.8	400/400
										10.0	33.4/30.4	29/ 36	78.9/ 91.0	310.2/303.0	400/400
										10.0	33.4/30.4	59/ 72	157.7/182.0	310.2/303.0	400/400
										10.0	33.4/30.4	88/108†	236.6/273.0	353.5/393.8	400/400
										15.0	48.4/44.0	29/ 36	78.9/ 91.0	325.2/316.6	400/400
										15.0	48.4/44.0	59/ 72	157.7/182.0	325.2/316.6	400/400
										15.0	48.4/44.0	88/108†	236.6/273.0	353.5/393.8	400/400
										20.0	61.6/56.0	29/ 36	78.9/ 91.0	338.4/328.6	400/400
										20.0	61.6/56.0	59/ 72	157.7/182.0	338.4/328.6	400/400
										20.0	61.6/56.0	88/108†	236.6/273.0	353.5/393.8	400/400
						20.0	59.4/ 54.0	290.0/ 284.6	350/ 350	**10.0**	**33.4/30.4**	**—**	**—**	**323.4/315.0**	**400/400**
										15.0	**48.4/44.0**	**—**	**—**	**338.4/328.6**	**400/400**
										20.0	**61.6/56.0**	**—**	**—**	**351.6/340.6**	**450/400**
										—	—	29/ 36	78.9/ 91.0	290.0/284.6	350/350
										—	—	59/ 72	157.7/182.0	290.0/295.0	350/350
										—	—	88/108†	236.6/273.0	370.0/408.8	450/450
										10.0	33.4/30.4	29/ 36	78.9/ 91.0	323.4/315.0	400/400
										10.0	33.4/30.4	59/ 72	157.7/182.0	323.4/315.0	400/400
										10.0	33.4/30.4	88/108†	236.6/273.0	370.0/408.8	450/450
										15.0	48.4/44.0	29/ 36	78.9/ 91.0	338.4/328.6	400/400
										15.0	48.4/44.0	59/ 72	157.7/182.0	338.4/328.6	400/400
										15.0	48.4/44.0	88/108†	236.6/273.0	370.0/408.8	450/450
										20.0	61.6/56.0	29/ 36	78.9/ 91.0	351.6/340.6	450/400
										20.0	61.6/56.0	59/ 72	157.7/182.0	351.6/340.6	450/400
										20.0	61.6/56.0	88/108†	236.6/273.0	370.0/408.8	450/450
						25.0	74.8/ 68.0	305.4/ 298.6	400/ 400	**10.0**	**33.4/30.4**	**—**	**—**	**338.8/329.0**	**400/400**
										15.0	**48.4/44.0**	**—**	**—**	**353.8/342.6**	**450/450**
										20.0	**61.6/56.0**	**—**	**—**	**367.0/354.6**	**450/450**
										—	—	29/ 36	78.9/ 91.0	305.4/298.6	400/400
										—	—	59/ 72	157.7/182.0	305.4/312.5	450/450
										—	—	88/108†	236.6/273.0	389.3/426.3	500/500
										10.0	33.4/30.4	29/ 36	78.9/ 91.0	338.8/329.0	400/400
										10.0	33.4/30.4	59/ 72	157.7/182.0	338.8/329.0	450/450
										10.0	33.4/30.4	88/108†	236.6/273.0	389.3/426.3	500/500
										15.0	48.4/44.0	29/ 36	78.9/ 91.0	353.8/342.6	450/450
										15.0	48.4/44.0	59/ 72	157.7/182.0	353.8/342.6	450/450
										15.0	48.4/44.0	88/108†	236.6/273.0	389.3/426.3	500/500
										20.0	61.6/56.0	29/ 36	78.9/ 91.0	367.0/354.6	450/450
										20.0	61.6/56.0	59/ 72	157.7/182.0	367.0/354.6	450/450
										20.0	61.6/56.0	88/108†	236.6/273.0	389.3/426.3	500/500
						30.0	88.0/ 80.0	318.6/ 310.6	400/ 400	**10.0**	**33.4/30.4**	**—**	**—**	**352.0/341.0**	**450/400**
										15.0	**48.4/44.0**	**—**	**—**	**367.0/354.6**	**450/450**
										20.0	**61.6/56.0**	**—**	**—**	**380.2/366.6**	**450/450**
										—	—	29/ 36	78.9/ 91.0	318.6/310.6	400/400
										—	—	59/ 72	157.7/182.0	318.6/327.5	500/500
										—	—	88/108†	236.6/273.0	405.7/441.3	500/500
										10.0	33.4/30.4	29/ 36	78.9/ 91.0	352.0/341.0	450/400
										10.0	33.4/30.4	59/ 72	157.7/182.0	352.0/341.0	500/500
										10.0	33.4/30.4	88/108†	236.6/273.0	405.7/441.3	500/500
										15.0	48.4/44.0	29/ 36	78.9/ 91.0	367.0/354.6	450/450
										15.0	48.4/44.0	59/ 72	157.7/182.0	367.0/354.6	500/500
										15.0	48.4/44.0	88/108†	236.6/273.0	405.7/441.3	500/500
										20.0	61.6/56.0	29/ 36	78.9/ 91.0	380.2/366.6	450/450
										20.0	61.6/56.0	59/ 72	157.7/182.0	380.2/366.6	500/500
										20.0	61.6/56.0	88/108†	236.6/273.0	405.7/441.3	500/500

LEGEND

CV — Constant Volume
ETL — ETL Testing Laboratory
FLA — Full Load Amps
Hp — Nominal Horsepower
IFM — Indoor (Evaporator) Fan Motor
LRA — Locked Rotor Amps
MCA — Minimum Circuit Amps (for wire sizing)
MOCP — Maximum Overcurrent Protection
OFM — Outdoor (Condenser) Fan Motor
RLA — Rated Load Amps

*Electric heat available on 50 Series vertical discharge units.
†108 kW available on CV applications only.

NOTES:

1. Electric resistance heaters are rated at 208/240 v, 480 v, or 575 v. To determine heater capacity (kW) at unit operating voltage, multiply 240 v, 480 v, or 575 v capacity by appropriate multiplier below.

MULTIPLICATION FACTORS

HEATER kW RATING	VOLTAGE DISTRIBUTION V-3-60	MULTIPLICATION FACTOR
240	200	0.694
	208	0.751
	230	0.918
	240	1.000
480	440	0.840
	460	0.918
	480	1.000
575	550	0.915
	575	1.000
	600	1.089

Electric heaters are tested and ETL approved at maximum total external static pressure of 1.9 in. wg.

2. **Boldface** indicates 48 and 50 Series units. All other data is for 50 Series units only.

Table 5 — Electrical Data, 054 Units (cont)

460-3-60 (V-Ph-Hz)

VOLTAGE RANGE	COMPR NO. 1		COMPR NO. 2		OFM	IFM		BASE UNIT ONLY		EXHAUST FAN		ELECTRIC HEAT*		BASE UNIT WITH EXHAUST FAN AND/OR ELECTRIC HEAT*	
	RLA	LRA	RLA	LRA	Total FLA	Hp	FLA	MCA	MOCP	Total Hp	Total FLA	kW	FLA	MCA	MOCP
414-508	50.6	253.0	34.6	173.0	10.8	15.0	21.0	129.6	175	**10.0**	**15.2**	**—**	**—**	**144.8**	**175**
										15.0	**22.0**	**—**	**—**	**151.6**	**200**
										20.0	**28.0**	**—**	**—**	**157.6**	**200**
										—	—	36	46.3	129.6	175
										—	—	72	93.0	142.5	175
										—	—	108†	139.0	200.0	200
										10.0	15.2	36	46.3	144.8	175
										10.0	15.2	72	93.0	144.8	175
										10.0	15.2	108†	139.0	200.0	200
										15.0	22.0	36	46.3	151.6	200
										15.0	22.0	72	93.0	151.6	200
										15.0	22.0	108†	139.0	200.0	200
										20.0	28.0	36	46.3	157.6	200
										20.0	28.0	72	93.0	157.6	200
										20.0	28.0	108†	139.0	200.0	200
						20.0	27.0	135.6	175	**10.0**	**15.2**	**—**	**—**	**150.8**	**200**
										15.0	**22.0**	**—**	**—**	**157.6**	**200**
										20.0	**28.0**	**—**	**—**	**163.6**	**200**
										—	—	36	46.3	135.6	175
										—	—	72	93.0	150.0	200
										—	—	108†	139.0	207.5	225
										10.0	15.2	36	46.3	150.8	200
										10.0	15.2	72	93.0	150.8	200
										10.0	15.2	108†	139.0	207.5	225
										15.0	22.0	36	46.3	157.6	200
										15.0	22.0	72	93.0	157.6	200
										15.0	22.0	108†	139.0	207.5	225
										20.0	28.0	36	46.3	163.6	200
										20.0	28.0	72	93.0	163.6	200
										20.0	28.0	108†	139.0	207.5	225
						25.0	34.0	142.6	175	**10.0**	**15.2**	**—**	**—**	**157.8**	**200**
										15.0	**22.0**	**—**	**—**	**164.6**	**200**
										20.0	**28.0**	**—**	**—**	**170.6**	**200**
										—	—	36	46.3	142.6	175
										—	—	72	93.0	158.7	225
										—	—	108†	139.0	216.3	250
										10.0	15.2	36	46.3	157.8	200
										10.0	15.2	72	93.0	158.7	225
										10.0	15.2	108†	139.0	216.3	250
										15.0	22.0	36	46.3	164.6	200
										15.0	22.0	72	93.0	164.6	225
										15.0	22.0	108†	139.0	216.3	250
										20.0	28.0	36	46.3	170.6	200
										20.0	28.0	72	93.0	170.6	225
										20.0	28.0	108†	139.0	216.3	250
						30.0	40.0	148.6	175	**10.0**	**15.2**	**—**	**—**	**163.8**	**200**
										15.0	**22.0**	**—**	**—**	**170.6**	**200**
										20.0	**28.0**	**—**	**—**	**176.6**	**225**
										—	—	36	46.3	148.6	200
										—	—	72	93.0	166.2	250
										—	—	108†	139.0	223.7	250
										10.0	15.2	36	46.3	163.8	200
										10.0	15.2	72	93.0	166.2	250
										10.0	15.2	108†	139.0	223.7	250
										15.0	22.0	36	46.3	170.6	200
										15.0	22.0	72	93.0	170.6	250
										15.0	22.0	108†	139.0	223.7	250
										20.0	28.0	36	46.3	176.6	225
										20.0	28.0	72	93.0	176.6	250
										20.0	28.0	108†	139.0	223.7	250

Table 5 — Electrical Data, 054 Units (cont)

575-3-60 (V-Ph-Hz)

VOLTAGE RANGE	COMPR NO. 1		COMPR NO. 2		OFM	IFM		BASE UNIT ONLY		EXHAUST FAN		ELECTRIC HEAT*		BASE UNIT WITH EXHAUST FAN AND/OR ELECTRIC HEAT*	
	RLA	LRA	RLA	LRA	Total FLA	Hp	FLA	MCA	MOCP	Total Hp	Total FLA	kW	FLA	MCA	MOCP
518-632	39.1	176.0	28.8	120.0	9.6	**15.0**	**17.0**	**104.3**	**125**	**10.0**	**12.2**	**—**	**—**	**116.5**	**150**
										15.0	**18.0**	**—**	**—**	**122.3**	**150**
										20.0	**22.0**	**—**	**—**	**126.3**	**150**
										—	—	36	36.0	104.3	125
										—	—	72	72.0	111.2	125
										—	—	108†	108.0	156.2	175
										10.0	12.2	36	36.0	116.5	150
										10.0	12.2	72	72.0	116.5	150
										10.0	12.2	108†	108.0	156.2	175
										15.0	18.0	36	36.0	122.3	150
										15.0	18.0	72	72.0	122.3	150
										15.0	18.0	108†	108.0	156.2	175
										20.0	22.0	36	36.0	126.3	150
										20.0	22.0	72	72.0	126.3	150
										20.0	22.0	108†	108.0	156.2	175
						20.0	**22.0**	**109.3**	**125**	**10.0**	**12.2**	**—**	**—**	**121.5**	**150**
										15.0	**18.0**	**—**	**—**	**127.3**	**150**
										20.0	**22.0**	**—**	**—**	**131.3**	**150**
										—	—	36	36.0	109.3	125
										—	—	72	72.0	117.5	150
										—	—	108†	108.0	162.5	175
										10.0	12.2	36	36.0	121.5	150
										10.0	12.2	72	72.0	121.5	150
										10.0	12.2	108†	108.0	162.5	175
										15.0	18.0	36	36.0	127.3	150
										15.0	18.0	72	72.0	127.3	150
										15.0	18.0	108†	108.0	162.5	175
										20.0	22.0	36	36.0	131.3	150
										20.0	22.0	72	72.0	131.3	150
										20.0	22.0	108†	108.0	162.5	175
						25.0	**27.0**	**114.3**	**150**	**10.0**	**12.2**	**—**	**—**	**126.5**	**150**
										15.0	**18.0**	**—**	**—**	**132.3**	**150**
										20.0	**22.0**	**—**	**—**	**136.3**	**175**
										—	—	36	36.0	114.3	150
										—	—	72	72.0	123.7	175
										—	—	108†	108.0	168.7	200
										10.0	12.2	36	36.0	126.5	150
										10.0	12.2	72	72.0	126.5	175
										10.0	12.2	108†	108.0	168.7	200
										15.0	18.0	36	36.0	132.3	150
										15.0	18.0	72	72.0	132.3	175
										15.0	18.0	108†	108.0	168.7	200
										20.0	22.0	36	36.0	136.3	175
										20.0	22.0	72	72.0	136.3	175
										20.0	22.0	108†	108.0	168.7	200
						30.0	**32.0**	**119.3**	**150**	**10.0**	**12.2**	**—**	**—**	**131.5**	**150**
										15.0	**18.0**	**—**	**—**	**137.3**	**175**
										20.0	**22.0**	**—**	**—**	**141.3**	**175**
										—	—	36	36.0	119.3	150
										—	—	72	72.0	130.0	200
										—	—	108†	108.0	175.0	225
										10.0	12.2	36	36.0	131.5	150
										10.0	12.2	72	72.0	131.5	200
										10.0	12.2	108†	108.0	175.0	225
										15.0	18.0	36	36.0	137.3	175
										15.0	18.0	72	72.0	137.3	200
										15.0	18.0	108†	108.0	175.0	225
										20.0	22.0	36	36.0	141.3	175
										20.0	22.0	72	72.0	141.3	200
										20.0	22.0	108†	108.0	175.0	225

LEGEND

CV — Constant Volume
ETL — ETL Testing Laboratory
FLA — Full Load Amps
Hp — Nominal Horsepower
IFM — Indoor (Evaporator) Fan Motor
LRA — Locked Rotor Amps
MCA — Minimum Circuit Amps (for wire sizing)
MOCP — Maximum Overcurrent Protection
OFM — Outdoor (Condenser) Fan Motor
RLA — Rated Load Amps

*Electric heat available on 50 Series vertical discharge units.
†108 kW available on CV applications only.

NOTES:

1. Electric resistance heaters are rated at 208/240 v, 480 v, or 575 v. To determine heater capacity (kW) at unit operating voltage, multiply 240 v, 480 v, or 575 v capacity by appropriate multiplier below.

MULTIPLICATION FACTORS

HEATER kW RATING	VOLTAGE DISTRIBUTION V-3-60	MULTIPLICATION FACTOR
240	200	0.694
	208	0.751
	230	0.918
	240	1.000
480	440	0.840
	460	0.918
	480	1.000
575	550	0.915
	575	1.000
	600	1.089

Electric heaters are tested and ETL approved at maximum total external static pressure of 1.9 in. wg.

2. **Boldface** indicates 48 and 50 Series units. All other data is for 50 Series units only.

Table 6 — Electrical Data, 064 Units

208/230-3-60 (V-Ph-Hz)

VOLTAGE RANGE	COMPR NO. 1		COMPR NO. 2		OFM	IFM		BASE UNIT ONLY		EXHAUST FAN		ELECTRIC HEAT*		BASE UNIT WITH EXHAUST FAN AND/OR ELECTRIC HEAT*	
	RLA	LRA	RLA	LRA	Total FLA	Hp	FLA	MCA	MOCP	Total Hp	Total FLA	kW	FLA	MCA	MOCP
187-254	107.7	506.0	107.0	506.0	21.6	15.0	46.2/ 42.0	310.1/ 305.9	400/ 400	**10.0**	**33.4/30.4**	**—**	**—**	**343.5/336.3**	**450/400**
										15.0	**48.4/44.0**	**—**	**—**	**358.5/349.9**	**450/450**
										20.0	**61.6/56.0**	**—**	**—**	**371.7/361.9**	**450/450**
										—	—	29/ 36	78.9/ 91.0	310.1/305.9	400/400
										—	—	59/ 72	157.7/182.0	310.1/305.9	400/400
										—	—	88/108†	236.6/273.0	353.5/393.8	400/400
										10.0	33.4/30.4	29/ 36	78.9/ 91.0	343.5/336.3	450/400
										10.0	33.4/30.4	59/ 72	157.7/182.0	343.5/336.3	450/400
										10.0	33.4/30.4	88/108†	236.6/273.0	353.5/393.8	450/400
										15.0	48.4/44.0	29/ 36	78.9/ 91.0	358.5/349.9	450/450
										15.0	48.4/44.0	59/ 72	157.7/182.0	358.5/349.9	450/450
										15.0	48.4/44.0	88/108†	236.6/273.0	358.5/393.8	450/450
										20.0	61.6/56.0	29/ 36	78.9/ 91.0	371.7/361.9	450/450
										20.0	61.6/56.0	59/ 72	157.7/182.0	371.7/361.9	450/450
										20.0	61.6/56.0	88/108†	236.6/273.0	371.7/393.8	450/450
						20.0	59.4/ 54.0	323.3/ 317.9	400/ 400	**10.0**	**33.4/30.4**	**—**	**—**	**356.7/348.3**	**450/450**
										15.0	**48.4/44.0**	**—**	**—**	**371.7/361.9**	**450/450**
										20.0	**61.6/66.0**	**—**	**—**	**384.9/373.9**	**450/450**
										—	—	29/ 36	78.9/ 91.0	323.3/317.9	400/400
										—	—	59/ 72	157.7/182.0	323.3/317.9	400/400
										—	—	88/108†	236.6/273.0	370.0/408.8	450/450
										10.0	33.4/30.4	29/ 36	78.9/ 91.0	356.7/348.3	450/450
										10.0	33.4/30.4	59/ 72	157.7/182.0	356.7/348.3	450/450
										10.0	33.4/30.4	88/108†	236.6/273.0	370.0/408.8	450/450
										15.0	48.4/44.0	29/ 36	78.9/ 91.0	371.7/361.9	450/450
										15.0	48.4/44.0	59/ 72	157.7/182.0	371.7/361.9	450/450
										15.0	48.4/44.0	88/108†	236.6/273.0	371.7/408.8	450/450
										20.0	61.6/56.0	29/ 36	78.9/ 91.0	384.9/373.9	450/450
										20.0	61.6/56.0	59/ 72	157.7/182.0	384.9/373.9	450/450
										20.0	61.6/56.0	88/108†	236.6/273.0	384.9/408.8	450/450
						25.0	74.8/ 68.0	338.7/ 331.9	400/ 400	**10.0**	**33.4/30.4**	**—**	**—**	**372.1/362.3**	**450/450**
										15.0	**48.4/44.0**	**—**	**—**	**387.1/375.9**	**450/450**
										20.0	**61.6/56.0**	**—**	**—**	**400.3/387.9**	**500/450**
										—	—	29/ 36	78.9/ 91.0	338.7/331.9	400/400
										—	—	59/ 72	157.7/182.0	338.7/331.9	450/450
										—	—	88/108†	236.6/273.0	389.3/426.3	500/500
										10.0	33.4/30.4	29/ 36	78.9/ 91.0	372.1/362.3	450/450
										10.0	33.4/30.4	59/ 72	157.7/182.0	372.1/362.3	450/450
										10.0	33.4/30.4	88/108†	236.6/273.0	389.3/426.3	500/500
										15.0	48.4/44.0	29/ 36	78.9/ 91.0	387.1/375.9	450/450
										15.0	48.4/44.0	59/ 72	157.7/182.0	387.1/375.9	450/450
										15.0	48.4/44.0	88/108†	236.6/273.0	389.3/426.3	500/500
										20.0	61.6/56.0	29/ 36	78.9/ 91.0	400.3/387.9	500/450
										20.0	61.6/56.0	59/ 72	157.7/182.0	400.3/387.9	500/450
										20.0	61.6/56.0	88/108†	236.6/273.0	400.3/426.3	500/500
						30.0	88.0/ 80.0	351.9/ 343.9	450/ 450	**10.0**	**33.4/30.4**	**—**	**—**	**385.3/374.3**	**450/450**
										15.0	**48.4/44.0**	**—**	**—**	**400.3/387.9**	**500/450**
										20.0	**61.6/56.0**	**—**	**—**	**413.5/399.9**	**500/500**
										—	—	29/ 36	78.9/ 91.0	351.9/343.9	450/450
										—	—	59/ 72	157.7/182.0	351.9/343.9	500/500
										—	—	88/108†	236.6/273.0	405.7/441.3	500/500
										10.0	33.4/30.4	29/ 36	78.9/ 91.0	385.3/374.3	450/450
										10.0	33.4/30.4	59/ 72	157.7/182.0	385.3/374.3	500/500
										10.0	33.4/30.4	88/108†	236.6/273.0	405.7/441.3	500/500
										15.0	48.4/44.0	29/ 36	78.9/ 91.0	400.3/387.9	500/450
										15.0	48.4/44.0	59/ 72	157.7/182.0	400.3/387.9	500/500
										15.0	48.4/44.0	88/108†	236.6/273.0	405.7/441.3	500/500
										20.0	61.6/56.0	29/ 36	78.9/ 91.0	413.5/399.9	500/500
										20.0	61.6/56.0	59/ 72	157.7/182.0	413.5/399.9	500/500
										20.0	61.6/56.0	88/108†	236.6/273.0	413.5/441.3	500/500

Table 6 — Electrical Data, 064 Units (cont)

460-3-60 (V-Ph-Hz)

VOLTAGE RANGE	COMPR NO. 1		COMPR NO. 2		OFM	IFM		BASE UNIT ONLY		EXHAUST FAN		ELECTRIC HEAT*		BASE UNIT WITH EXHAUST FAN AND/OR ELECTRIC HEAT*	
	RLA	LRA	RLA	LRA	Total FLA	Hp	FLA	MCA	MOCP	Total Hp	Total FLA	kW	FLA	MCA	MOCP
414-508	50.6	253.0	50.6	253.0	10.8	**15.0**	**21.0**	**145.6**	**175**	**10.0**	**15.2**	**—**	**—**	**160.8**	**200**
										15.0	**22.0**	**—**	**—**	**167.6**	**200**
										20.0	**28.0**	**—**	**—**	**173.6**	**200**
										—	—	36	46.3	145.6	175
										—	—	72	93.0	145.6	175
										—	—	108†	139.0	200.0	200
										10.0	15.2	36	46.3	160.8	200
										10.0	15.2	72	93.0	160.8	200
										10.0	15.2	108†	139.0	200.0	200
										15.0	22.0	36	46.3	167.6	200
										15.0	22.0	72	93.0	167.6	200
										15.0	22.0	108†	139.0	200.0	200
										20.0	28.0	36	46.3	173.6	200
										20.0	28.0	72	93.0	173.6	200
										20.0	28.0	108†	139.0	200.0	200
						20.0	**27.0**	**151.6**	**200**	**10.0**	**15.2**	**—**	**—**	**166.8**	**200**
										15.0	**22.0**	**—**	**—**	**173.6**	**200**
										20.0	**28.0**	**—**	**—**	**179.6**	**225**
										—	—	36	46.3	151.6	200
										—	—	72	93.0	151.6	200
										—	—	108†	139.0	207.5	225
										10.0	15.2	36	46.3	166.8	200
										10.0	15.2	72	93.0	166.8	200
										10.0	15.2	108†	139.0	207.5	225
										15.0	22.0	36	46.3	173.6	200
										15.0	22.0	72	93.0	173.6	200
										15.0	22.0	108†	139.0	207.5	225
										20.0	28.0	36	46.3	179.6	225
										20.0	28.0	72	93.0	179.6	225
										20.0	28.0	108†	139.0	207.5	225
						25.0	**34.0**	**158.6**	**200**	**10.0**	**15.2**	**—**	**—**	**173.8**	**200**
										15.0	**22.0**	**—**	**—**	**180.6**	**225**
										20.0	**28.0**	**—**	**—**	**186.6**	**225**
										—	—	36	46.3	158.6	200
										—	—	72	93.0	158.7	225
										—	—	108†	139.0	216.3	250
										10.0	15.2	36	46.3	173.8	200
										10.0	15.2	72	93.0	173.8	225
										10.0	15.2	108†	139.0	216.3	250
										15.0	22.0	36	46.3	180.6	225
										15.0	22.0	72	93.0	180.6	225
										15.0	22.0	108†	139.0	216.3	250
										20.0	28.0	36	46.3	186.6	225
										20.0	28.0	72	93.0	186.6	225
										20.0	28.0	108†	139.0	216.3	250
						30.0	**40.0**	**164.6**	**200**	**10.0**	**15.2**	**—**	**—**	**179.8**	**225**
										15.0	**22.0**	**—**	**—**	**186.6**	**225**
										20.0	**28.0**	**—**	**—**	**192.6**	**225**
										—	—	36	46.3	164.6	200
										—	—	72	93.0	166.2	250
										—	—	108†	139.0	223.7	250
										10.0	15.2	36	46.3	179.8	225
										10.0	15.2	72	93.0	179.8	250
										10.0	15.2	108†	139.0	223.7	250
										15.0	22.0	36	46.3	186.6	225
										15.0	22.0	72	93.0	186.6	250
										15.0	22.0	108†	139.0	223.7	250
										20.0	28.0	36	46.3	192.6	225
										20.0	28.0	72	93.0	192.6	250
										20.0	28.0	108†	139.0	223.7	250

LEGEND

CV — Constant Volume
ETL — ETL Testing Laboratory
FLA — Full Load Amps
Hp — Nominal Horsepower
IFM — Indoor (Evaporator) Fan Motor
LRA — Locked Rotor Amps
MCA — Minimum Circuit Amps (for wire sizing)
MOCP — Maximum Overcurrent Protection
OFM — Outdoor (Condenser) Fan Motor
RLA — Rated Load Amps

*Electric heat available on 50 Series vertical discharge units.
†108 kW available on CV applications only.

NOTES:

1. Electric resistance heaters are rated at 208/240 v, 480 v, or 575 v. To determine heater capacity (kW) at unit operating voltage, multiply 240 v, 480 v, or 575 v capacity by appropriate multiplier below.

MULTIPLICATION FACTORS

HEATER kW RATING	VOLTAGE DISTRIBUTION V-3-60	MULTIPLICATION FACTOR
240	200	0.694
	208	0.751
	230	0.918
	240	1.000
480	440	0.840
	460	0.918
	480	1.000
575	550	0.915
	575	1.000
	600	1.089

Electric heaters are tested and ETL approved at maximum total external static pressure of 1.9 in. wg.

2. **Boldface** indicates 48 and 50 Series units. All other data is for 50 Series units only.

Table 6 — Electrical Data, 064 Units (cont)

575-3-60 (V-Ph-Hz)

VOLTAGE RANGE	COMPR NO. 1		COMPR NO. 2		OFM	IFM		BASE UNIT ONLY		EXHAUST FAN		ELECTRIC HEAT*		BASE UNIT WITH EXHAUST FAN AND/OR ELECTRIC HEAT*	
	RLA	LRA	RLA	LRA	Total FLA	Hp	FLA	MCA	MOCP	Total Hp	Total FLA	kW	FLA	MCA	MOCP
518-632	39.1	176.0	39.1	176.0	9.6	15.0	17.0	114.6	150	**10.0**	**12.2**	**—**	**—**	**126.8**	**150**
										15.0	**18.0**	**—**	**—**	**132.6**	**150**
										20.0	**22.0**	**—**	**—**	**136.6**	**175**
										—	—	36	36.0	114.6	150
										—	—	72	72.0	114.6	150
										—	—	108†	108.0	156.2	175
										10.0	12.2	36	36.0	126.8	150
										10.0	12.2	72	72.0	126.8	150
										10.0	12.2	108†	108.0	156.2	175
										15.0	18.0	36	36.0	132.6	150
										15.0	18.0	72	72.0	132.6	150
										15.0	18.0	108†	108.0	156.2	175
										20.0	22.0	36	36.0	136.6	175
										20.0	22.0	72	72.0	136.6	175
										20.0	22.0	108†	108.0	156.2	175
						20.0	22.0	119.6	150	**10.0**	**12.2**	**—**	**—**	**131.8**	**150**
										15.0	**18.0**	**—**	**—**	**137.6**	**175**
										20.0	**22.0**	**—**	**—**	**141.6**	**175**
										—	—	36	36.0	119.6	150
										—	—	72	72.0	119.6	150
										—	—	108†	108.0	162.5	175
										10.0	12.2	36	36.0	131.8	150
										10.0	12.2	72	72.0	131.8	150
										10.0	12.2	108†	108.0	162.5	175
										15.0	18.0	36	36.0	137.6	175
										15.0	18.0	72	72.0	137.6	175
										15.0	18.0	108†	108.0	162.5	175
										20.0	22.0	36	36.0	141.6	175
										20.0	22.0	72	72.0	141.6	175
										20.0	22.0	108†	108.0	162.5	175
						25.0	27.0	124.6	150	**10.0**	**12.2**	**—**	**—**	**136.8**	**175**
										15.0	**18.0**	**—**	**—**	**142.6**	**175**
										20.0	**22.0**	**—**	**—**	**146.6**	**175**
										—	—	36	36.0	124.6	150
										—	—	72	72.0	124.6	175
										—	—	108†	108.0	168.7	200
										10.0	12.2	36	36.0	136.8	175
										10.0	12.2	72	72.0	136.8	175
										10.0	12.2	108†	108.0	168.7	200
										15.0	18.0	36	36.0	142.6	175
										15.0	18.0	72	72.0	142.6	175
										15.0	18.0	108†	108.0	168.7	200
										20.0	22.0	36	36.0	146.6	175
										20.0	22.0	72	72.0	146.6	175
										20.0	22.0	108†	108.0	168.7	200
						30.0	32.0	129.6	150	**10.0**	**12.2**	**—**	**—**	**141.8**	**175**
										15.0	**18.0**	**—**	**—**	**147.6**	**175**
										20.0	**22.0**	**—**	**—**	**151.6**	**175**
										—	—	36	36.0	129.6	150
										—	—	72	72.0	130.0	200
										—	—	108†	108.0	175.0	225
										10.0	12.2	36	36.0	141.8	175
										10.0	12.2	72	72.0	141.8	200
										10.0	12.2	108†	108.0	175.0	225
										15.0	18.0	36	36.0	147.6	175
										15.0	18.0	72	72.0	147.6	200
										15.0	18.0	108†	108.0	175.0	225
										20.0	22.0	36	36.0	151.6	175
										20.0	22.0	72	72.0	151.6	200
										20.0	22.0	108†	108.0	175.0	225

Table 7 — Electrical Data, 074 Units

208/230-3-60 (V-Ph-Hz)

VOLTAGE RANGE	COMPR NO. 1		COMPR NO. 2		OFM	IFM		BASE UNIT ONLY		EXHAUST FAN		ELECTRIC HEAT*		BASE UNIT WITH EXHAUST FAN AND/OR ELECTRIC HEAT*	
	RLA	LRA	RLA	LRA	Total FLA	Hp	FLA	MCA	MOCP	Total Hp	Total FLA	kW	FLA	MCA	MOCP
187-254	107.7	506.0	142.3	690.0	27.8	**15.0**	**46.2/ 42.0**	**358.8/ 854.6**	**500/ 450**	**10.0**	**33.4/30.4**	**—**	**—**	**392.2/385.0**	**500/500**
										15.0	**48.4/44.0**	**—**	**—**	**407.2/398.6**	**500/500**
										20.0	**61.6/56.0**	**—**	**—**	**420.4/410.6**	**500/500**
										—	—	29/ 36	78.9/ 91.0	358.8/354.6	500/450
										—	—	59/ 72	157.7/182.0	358.8/354.6	500/450
										—	—	88/108†	236.6/273.0	358.8/393.8	500/450
										10.0	33.4/30.4	29/ 36	78.9/ 91.0	392.2/385.0	500/500
										10.0	33.4/30.4	59/ 72	157.7/182.0	392.2/385.0	500/500
										10.0	33.4/30.4	88/108†	236.6/273.0	392.2/393.8	500/500
										15.0	48.4/44.0	29/ 36	78.9/ 91.0	407.2/398.6	500/500
										15.0	48.4/44.0	59/ 72	157.7/182.0	407.2/398.6	500/500
										15.0	48.4/44.0	88/108†	236.6/273.0	407.2/398.6	500/500
										20.0	61.6/56.0	29/ 36	78.9/ 91.0	420.4/410.6	500/500
										20.0	61.6/56.0	59/ 72	157.7/182.0	420.4/410.6	500/500
										20.0	61.6/56.0	88/108†	236.6/273.0	420.4/410.6	500/500
						20.0	**59.4/ 64.0**	**372.0/ 366.6**	**500/ 500**	**10.0**	**33.4/30.4**	**—**	**—**	**405.4/397.0**	**500/500**
										15.0	**48.4/44.0**	**—**	**—**	**420.4/410.6**	**500/500**
										20.0	**61.6/56.0**	**—**	**—**	**433.6/422.6**	**500/500**
										—	—	29/ 36	78.9/ 91.0	372.0/366.6	500/500
										—	—	59/ 72	157.7/182.0	372.0/366.6	500/500
										—	—	88/108†	236.6/273.0	372.0/408.8	500/500
										10.0	33.4/30.4	29/ 36	78.9/ 91.0	405.4/397.0	500/500
										10.0	33.4/30.4	59/ 72	157.7/182.0	405.4/397.0	500/500
										10.0	33.4/30.4	88/108†	236.6/273.0	405.4/408.8	500/500
										15.0	48.4/44.0	29/ 36	78.9/ 91.0	420.4/410.6	500/500
										15.0	48.4/44.0	59/ 72	157.7/182.0	420.4/410.6	500/500
										15.0	48.4/44.0	88/108†	236.6/273.0	420.4/410.6	500/500
										20.0	61.6/56.0	29/ 36	78.9/ 91.0	433.6/422.6	500/500
										20.0	61.6/56.0	59/ 72	157.7/182.0	433.6/422.6	500/500
										20.0	61.6/56.0	88/108†	236.6/273.0	433.6/422.6	500/500
						25.0	**74.8/ 68.0**	**387.4/ 380.6**	**500/ 500**	**10.0**	**33.4/30.4**	**—**	**—**	**420.8/411.0**	**500/500**
										15.0	**48.4/44.0**	**—**	**—**	**435.8/424.6**	**500/500**
										20.0	**61.6/56.0**	**—**	**—**	**449.0/436.6**	**500/500**
										—	—	29/ 36	78.9/ 91.0	387.4/380.6	500/500
										—	—	59/ 72	157.7/182.0	387.4/380.6	500/500
										—	—	88/108†	236.6/273.0	389.3/426.3	500/500
										10.0	33.4/30.4	29/ 36	78.9/ 91.0	420.8/411.0	500/500
										10.0	33.4/30.4	59/ 72	157.7/182.0	420.8/411.0	500/500
										10.0	33.4/30.4	88/108†	236.6/273.0	420.8/426.3	500/500
										15.0	48.4/44.0	29/ 36	78.9/ 91.0	435.8/424.6	500/500
										15.0	48.4/44.0	59/ 72	157.7/182.0	435.8/424.6	500/500
										15.0	48.4/44.0	88/108†	236.6/273.0	435.8/426.3	500/500
										20.0	61.6/56.0	29/ 36	78.9/ 91.0	449.0/436.6	500/500
										20.0	61.6/56.0	59/ 72	157.7/182.0	449.0/436.6	500/500
										20.0	61.6/56.0	88/108†	236.6/273.0	449.0/436.6	500/500
						30.0	**88.0/ 80.0**	**400.6/ 392.6**	**500/ 500**	**10.0**	**33.4/30.4**	**—**	**—**	**434.0/423.0**	**500/500**
										15.0	**48.4/44.0**	**—**	**—**	**449.0/436.6**	**500/500**
										20.0	**61.6/56.0**	**—**	**—**	**462.2/448.6**	**600/500**
										—	—	29/ 36	78.9/ 91.0	400.6/392.6	500/500
										—	—	59/ 72	157.7/182.0	400.6/392.6	500/500
										—	—	88/108†	236.6/273.0	405.7/441.3	500/500
										10.0	33.4/30.4	29/ 36	78.9/ 91.0	434.0/423.0	500/500
										10.0	33.4/30.4	59/ 72	157.7/182.0	434.0/423.0	500/500
										10.0	33.4/30.4	88/108†	236.6/273.0	434.0/441.3	500/500
										15.0	48.4/44.0	29/ 36	78.9/ 91.0	449.0/436.6	500/500
										15.0	48.4/44.0	59/ 72	157.7/182.0	449.0/436.6	500/500
										15.0	48.4/44.0	88/108†	236.6/273.0	449.0/441.3	500/500
										20.0	61.6/56.0	29/ 36	78.9/ 91.0	462.2/448.6	600/500
										20.0	61.6/56.0	59/ 72	157.7/182.0	462.2/448.6	600/500
										20.0	61.6/66.0	88/108†	236.6/273.0	462.2/448.6	600/500

LEGEND

CV — Constant Volume
ETL — ETL Testing Laboratory
FLA — Full Load Amps
Hp — Nominal Horsepower
IFM — Indoor (Evaporator) Fan Motor
LRA — Locked Rotor Amps
MCA — Minimum Circuit Amps (for wire sizing)
MOCP — Maximum Overcurrent Protection
OFM — Outdoor (Condenser) Fan Motor
RLA — Rated Load Amps

*Electric heat available on 50 Series vertical discharge units.
†108 kW available on CV applications only.

NOTES:

1. Electric resistance heaters are rated at 208/240 v, 480 v, or 575 v. To determine heater capacity (kW) at unit operating voltage, multiply 240 v, 480 v, or 575 v capacity by appropriate multiplier below.

MULTIPLICATION FACTORS

HEATER kW RATING	VOLTAGE DISTRIBUTION V-3-60	MULTIPLICATION FACTOR
240	200	0.694
	208	0.751
	230	0.918
	240	1.000
480	440	0.840
	460	0.918
	480	1.000
575	550	0.915
	575	1.000
	600	1.089

Electric heaters are tested and ETL approved at maximum total external static pressure of 1.9 in. wg.

2. **Boldface** indicates 48 and 50 Series units. All other data is for 50 Series units only.

Table 7 — Electrical Data, 074 Units (cont)

460-3-60 (V-Ph-Hz)

VOLTAGE RANGE	COMPR NO. 1		COMPR NO. 2		OFM	IFM		BASE UNIT ONLY		EXHAUST FAN		ELECTRIC HEAT*		BASE UNIT WITH EXHAUST FAN AND/OR ELECTRIC HEAT*	
	RLA	LRA	RLA	LRA	Total FLA	Hp	FLA	MCA	MOCP	Total Hp	Total FLA	kW	FLA	MCA	MOCP
414-508	50.6	253.0	65.4	345.0	13.5	15.0	21.0	166.8	225	**10.0**	**15.2**	**—**	**—**	**182.0**	**225**
										15.0	**22.0**	**—**	**—**	**188.8**	**250**
										20.0	**28.0**	**—**	**—**	**194.8**	**250**
										—	—	36	46.3	166.8	225
										—	—	72	93.0	166.8	225
										—	—	108†	139.0	200.0	225
										10.0	15.2	36	46.3	182.0	225
										10.0	15.2	72	93.0	182.0	225
										10.0	15.2	108†	139.0	200.0	225
										15.0	22.0	36	46.3	188.8	250
										15.0	22.0	72	93.0	188.8	250
										15.0	22.0	108†	139.0	200.0	250
										20.0	28.0	36	46.3	194.8	250
										20.0	28.0	72	93.0	194.8	250
										20.0	28.0	108†	139.0	200.0	250
						20.0	27.0	172.8	225	**10.0**	**15.2**	**—**	**—**	**188.0**	**250**
										15.0	**22.0**	**—**	**—**	**194.8**	**250**
										20.0	**28.0**	**—**	**—**	**200.8**	**250**
										—	—	36	46.3	172.8	225
										—	—	72	93.0	172.8	225
										—	—	108†	139.0	207.5	225
										10.0	15.2	36	46.3	188.0	250
										10.0	15.2	72	93.0	188.0	250
										10.0	15.2	108†	139.0	207.5	250
										15.0	22.0	36	46.3	194.8	250
										15.0	22.0	72	93.0	194.8	250
										15.0	22.0	108†	139.0	207.5	250
										20.0	28.0	36	46.3	200.8	250
										20.0	28.0	72	93.0	200.8	250
										20.0	28.0	108†	139.0	207.5	250
						25.0	34.0	179.8	225	**10.0**	**15.2**	**—**	**—**	**195.0**	**250**
										15.0	**22.0**	**—**	**—**	**201.8**	**250**
										20.0	**28.0**	**—**	**—**	**207.8**	**250**
										—	—	36	46.3	179.8	225
										—	—	72	93.0	179.8	225
										—	—	108†	139.0	216.3	250
										10.0	15.2	36	46.3	195.0	250
										10.0	15.2	72	93.0	195.0	250
										10.0	15.2	108†	139.0	216.3	250
										15.0	22.0	36	46.3	201.8	250
										15.0	22.0	72	93.0	201.8	250
										15.0	22.0	108†	139.0	216.3	250
										20.0	28.0	36	46.3	207.8	250
										20.0	28.0	72	93.0	207.8	250
										20.0	28.0	108†	139.0	216.3	250
						30.0	40.0	185.8	250	**10.0**	**15.2**	**—**	**—**	**201.0**	**250**
										15.0	**22.0**	**—**	**—**	**207.8**	**250**
										20.0	**28.0**	**—**	**—**	**213.8**	**250**
										—	—	36	46.3	185.8	250
										—	—	72	93.0	185.8	250
										—	—	108†	139.0	223.7	250
										10.0	15.2	36	46.3	201.0	250
										10.0	15.2	72	93.0	201.0	250
										10.0	15.2	108†	139.0	223.7	250
										15.0	22.0	36	46.3	207.8	250
										15.0	22.0	72	93.0	207.8	250
										15.0	22.0	108†	139.0	223.7	250
										20.0	28.0	36	46.3	213.8	250
										20.0	28.0	72	93.0	213.8	250
										20.0	28.0	108†	139.0	223.7	250

Table 7 — Electrical Data, 074 Units (cont)

575-3-60 (V-Ph-Hz)

VOLTAGE RANGE	COMPR NO. 1		COMPR NO. 2		OFM	IFM		BASE UNIT ONLY		EXHAUST FAN		ELECTRIC HEAT*		BASE UNIT WITH EXHAUST FAN AND/OR ELECTRIC HEAT*	
	RLA	LRA	RLA	LRA	Total FLA	Hp	FLA	MCA	MOCP	Total Hp	Total FLA	kW	FLA	MCA	MOCP
518-632	39.1	176.0	52.6	276.0	12.0	**15.0**	**17.0**	**133.8**	**175**	**10.0**	**12.2**	**—**	**—**	**146.0**	**175**
										15.0	**18.0**	**—**	**—**	**151.8**	**200**
										20.0	**22.0**	**—**	**—**	**155.8**	**200**
										—	—	36	36.0	133.8	175
										—	—	72	72.0	133.8	175
										—	—	108†	108.0	156.2	175
										10.0	12.2	36	36.0	146.0	175
										10.0	12.2	72	72.0	146.0	175
										10.0	12.2	108†	108.0	156.2	175
										15.0	18.0	36	36.0	151.8	200
										15.0	18.0	72	72.0	151.8	200
										15.0	18.0	108†	108.0	156.2	200
										20.0	22.0	36	36.0	155.8	200
										20.0	22.0	72	72.0	155.8	200
										20.0	22.0	108†	108.0	156.2	200
						20.0	**22.0**	**138.8**	**175**	**10.0**	**12.2**	**—**	**—**	**151.0**	**200**
										15.0	**18.0**	**—**	**—**	**156.8**	**200**
										20.0	**22.0**	**—**	**—**	**160.8**	**200**
										—	—	36	36.0	138.8	175
										—	—	72	72.0	138.8	175
										—	—	108†	108.0	162.5	175
										10.0	12.2	36	36.0	151.0	200
										10.0	12.2	72	72.0	151.0	200
										10.0	12.2	108†	108.0	162.5	200
										15.0	18.0	36	36.0	156.8	200
										15.0	18.0	72	72.0	156.8	200
										15.0	18.0	108†	108.0	162.5	200
										20.0	22.0	36	36.0	160.8	200
										20.0	22.0	72	72.0	160.8	200
										20.0	22.0	108†	108.0	162.5	200
						25.0	**27.0**	**143.8**	**175**	**10.0**	**12.2**	**—**	**—**	**156.0**	**200**
										15.0	**18.0**	**—**	**—**	**161.8**	**200**
										20.0	**22.0**	**—**	**—**	**165.8**	**200**
										—	—	36	36.0	143.8	175
										—	—	72	72.0	143.8	175
										—	—	108†	108.0	168.7	200
										10.0	12.2	36	36.0	156.0	200
										10.0	12.2	72	72.0	156.0	200
										10.0	12.2	108†	108.0	168.7	200
										15.0	18.0	36	36.0	161.8	200
										15.0	18.0	72	72.0	161.8	200
										15.0	18.0	108†	108.0	168.7	200
										20.0	22.0	36	36.0	165.8	200
										20.0	22.0	72	72.0	165.8	200
										20.0	22.0	108†	108.0	168.7	200
						30.0	**32.0**	**148.8**	**200**	**10.0**	**12.2**	**—**	**—**	**161.0**	**200**
										15.0	**18.0**	**—**	**—**	**166.8**	**200**
										20.0	**22.0**	**—**	**—**	**170.8**	**200**
										—	—	36	36.0	148.8	200
										—	—	72	72.0	148.8	200
										—	—	108†	108.0	175.0	225
										10.0	12.2	36	36.0	161.0	200
										10.0	12.2	72	72.0	161.0	200
										10.0	12.2	108†	108.0	175.0	225
										15.0	18.0	36	36.0	166.8	200
										15.0	18.0	72	72.0	166.8	200
										15.0	18.0	108†	108.0	175.0	225
										20.0	22.0	36	36.0	170.8	200
										20.0	22.0	72	72.0	170.8	200
										20.0	22.0	108†	108.0	175.0	225

LEGEND

CV — Constant Volume
ETL — ETL Testing Laboratory
FLA — Full Load Amps
Hp — Nominal Horsepower
IFM — Indoor (Evaporator) Fan Motor
LRA — Locked Rotor Amps
MCA — Minimum Circuit Amps (for wire sizing)
MOCP — Maximum Overcurrent Protection
OFM — Outdoor (Condenser) Fan Motor
RLA — Rated Load Amps

*Electric heat available on 50 Series vertical discharge units.
†108 kW available on CV applications only.

NOTES:

1. Electric resistance heaters are rated at 208/240 v, 480 v, or 575 v. To determine heater capacity (kW) at unit operating voltage, multiply 240 v, 480 v, or 575 v capacity by appropriate multiplier below.

MULTIPLICATION FACTORS

HEATER kW RATING	VOLTAGE DISTRIBUTION V-3-60	MULTIPLICATION FACTOR
240	200	0.694
	208	0.751
	230	0.918
	240	1.000
480	440	0.840
	460	0.918
	480	1.000
575	550	0.915
	575	1.000
	600	1.089

Electric heaters are tested and ETL approved at maximum total external static pressure of 1.9 in. wg.

2. **Boldface** indicates 48 and 50 Series units. All other data is for 50 Series units only.

CONTROL WIRING — Install a Carrier-approved accessory 24-v thermostat assembly according to the installation instructions shipped with the accessory. Locate thermostat assembly to sense average temperature. Route thermostat cable or equivalent leads of colored wire from subbase terminals to terminal board (P1). The terminal board (P1) is located on the constant volume control board on units with no economizer and on the economizer board on units with the economizer option.

Total wire lengths should not exceed the following limits: 50 ft of 18 AWG, 80 ft of 16 AWG or 125 ft of 14 AWG. See Fig. 19 for field wiring connections between the thermostat and the unit 24-v terminal block. Once wire length from unit to thermostat is determined, the length should be doubled to obtain total wire length required. Voltage drop is dependent on length of current path.

There are no required 115-v field wiring connections, therefore no provisions have been made in the unit for running 115-v wiring. If any of the field-installed options requiring 115-v connections are desired, the unit must be modified in the field for 115-v wiring.

Options requiring 24-v or 115-v control wiring are listed below.

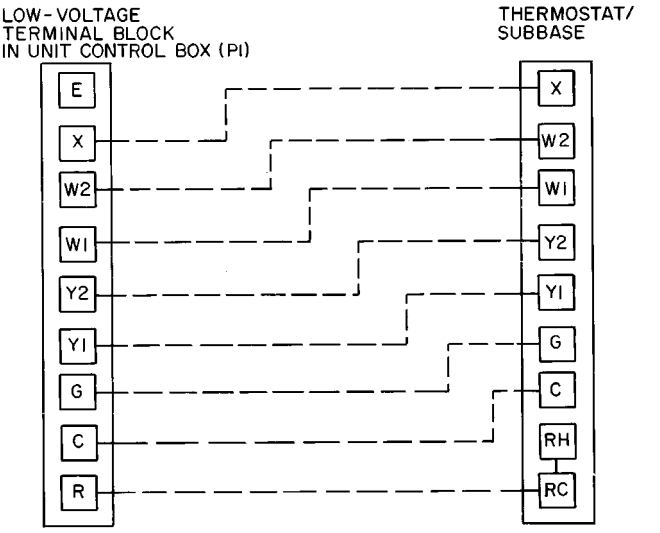

Fig. 19 — Field Control Thermostat Wiring

Building Pressurization or Smoke Purge Mode — Refer to appropriate unit Controls and Troubleshooting literature as necessary for additional information. See Fig. 20 and unit wiring label for wiring details.

1. Firestat or smoke detector (field-supplied normally-closed switch 1) — Remove factory-installed jumper wire and wire a field-supplied firestat or smoke detector contactor between terminals 5 and 6 (034-044 units) or terminals 2 and 3 (054-074 units) on terminal block 2 in the unit control box.
2. Switch to drive economizer outdoor-air damper fully open (field-supplied normally-open switch 2) — Wire a field-supplied switch between terminals 8 and 9 on economizer motor no. 1. When this switch is manually closed, it will drive the outdoor-air damper fully open.
3. Switch to disconnect power to economizer motors (field-supplied normally-closed switch 3) — Wire a field-supplied switch between terminal C on the economizer motor and Plug 8, Pin 2 (PL8-2).
4. Building pressurization switch (field-supplied normally-open switch 4) — Wire a field-supplied switch between TB2 and the C1 connection on the evaporator-fan contactor coil (IFC on unit label diagram).
5. Switch to isolate evaporator-fan motor (field-supplied normally-closed switch 5).

   Modulating Power Exhaust — Wire a field-supplied switch in series with the black wire removed from TRAN3 primary.

   Constant Volume Power Exhaust — Wire a field-supplied switch in series with the black wire from Plug 7, Pin 1 (PL7-1) to the red wire on economizer motor no. 2 (DMS1 on unit label diagram).
6. Switch to energize power exhaust motor (field-supplied normally-open switch 6) — Wire a field-supplied switch from terminal 5 (on 034-044 units) or terminal 2 (054-074 units) on terminal block 2 in series with the red wire from switch 5 to the damper motor switch (DMS1) on economizer motor no. 2 (or in parallel with SW5).
7. Switch to fully open power exhaust damper (field-supplied normally-open switch 7) — Wire a field-supplied switch between terminal C and the normally-closed switch on DPS2.

NOTES AND LEGEND FOR FIG. 20

BUILDING PRESSURIZATION	SMOKE PURGE	ALARM
Switch 1	Switch 1	Switch 1
Switch 2	Switch 2	Switch 3
Switch 4	Switch 5	
Switch 5	Switch 6	
	Switch 7 (MPE)	

Switch 1 — Remove jumper. Firestat or smoke detector — normally closed.
Switch 2 — Switch to drive economizer outdoor-air damper fully open — normally open.
Switch 3 — Switch to disconnect power to economizer motors. Drives economizer outdoor-air damper fully closed — normally closed.
Switch 4 — Building pressurization switch (energize evaporator-fan motor) — normally open.
Switch 5 — Switch to isolate evaporator-fan motor — normally closed.
Switch 6 — Switch to energize power exhaust motors — normally open.
Switch 7 — Switch to fully open power exhaust damper — normally open.

LEGEND

C — Contactor
DPS — Differential Pressure Switch
DMS — Damper Motor Switch
ECON — Economizer
IFC — Indoor (Evaporator) Fan Contactor
MPE — Modulating Power Exhaust
NC — Normally Closed
NO — Normally Open
PEC — Power Exhaust Contactor Coil
PL — Plug
SW — Switch
TB — Terminal Block
TRAN — Transformer

NOTES:
1. Power exhaust option can be unit mounted on vertical supply/return units only.
2. - - - - is field wiring.
3. ——— is field wiring.
4. Switches 1-7 are field supplied.
5. For building pressurization, field supplied power source must drive room terminals wide open.

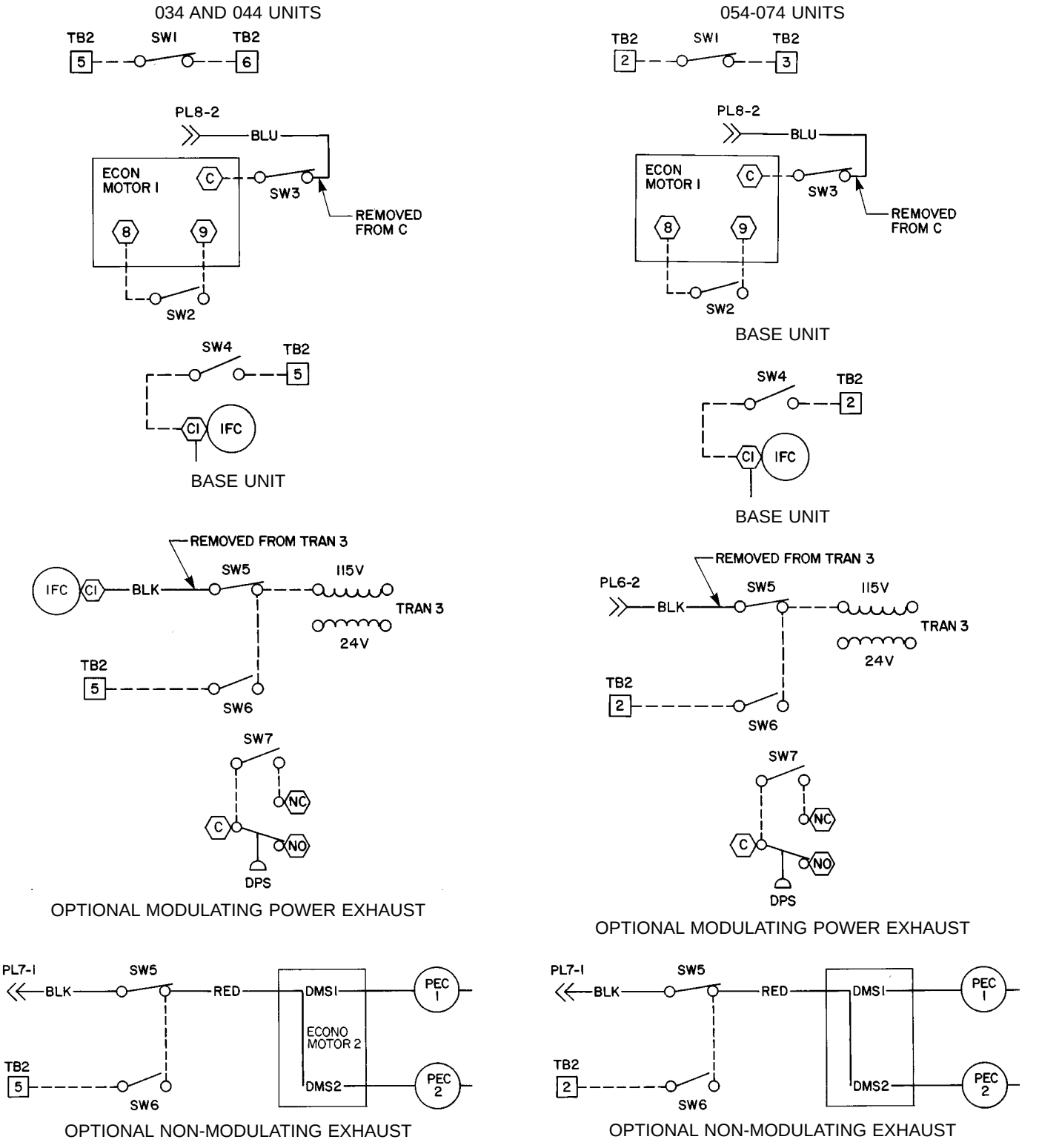

Fig. 20 — Field Wiring for Building Pressurization and Smoke Purge

Gas Piping (48 Series Units Only) — Unit is equipped for use with natural gas only. Installation must conform with local building codes, or in the absence of local codes, with the National Fuel Gas Code, ANSI Z223.1.

A 1/8-in. NPT tapping plug, accessible for test gage connection, must be field installed immediately upstream of gas supply connection to unit, but after manual gas valve. See Fig. 21. Natural gas pressure at unit gas connection must not be less than 5 in. wg or greater than 13 in. wg.

Size gas supply piping for 0.5 in. wg maximum pressure drop. Do not use supply pipe smaller than unit gas connection.

⚠ CAUTION

Disconnect gas piping from unit when leak testing at pressures greater than 0.5 psig. Pressures greater than 0.5 psig will cause gas valve damage resulting in a hazardous condition. If gas valve is subjected to pressure greater than 0.5 psig, it must be replaced.

Installing Flue/Inlet Hoods (48 Series Units Only) — The flue/inlet hoods are shipped in a bag taped to the basepan in the gas section.

UNIT SIZES 034 AND 044 — The 48 series units have 2 inlet hoods, 2 flue hoods, and 2 flue deflector hoods. See Fig. 22. The 48 series low-heat units have one inlet hood, one flue hood and one flue deflector hood.

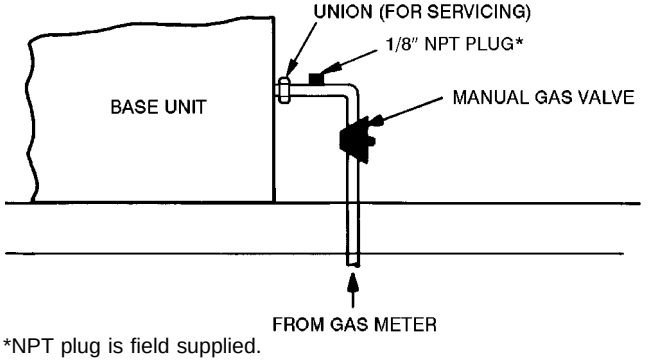

*NPT plug is field supplied.

NOTE: Follow all local codes.

Fig. 21 — Gas Piping Details

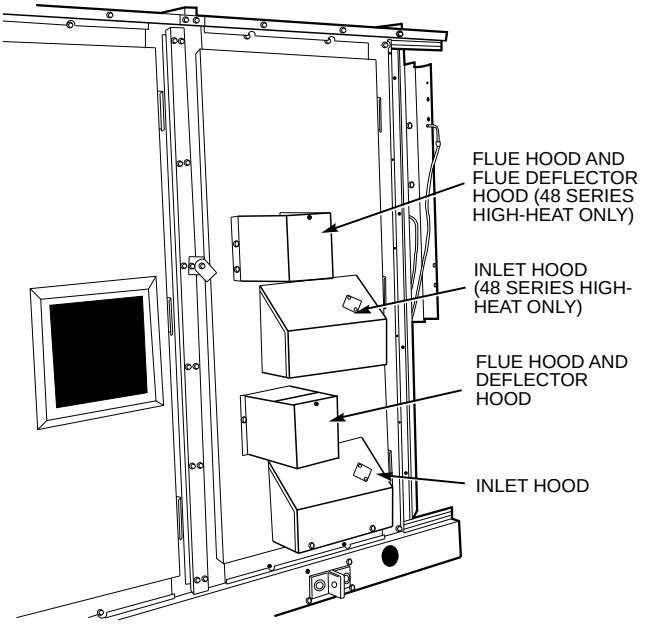

Fig. 22 — Flue/Inlet Hood, 034,044 Units

Remove shipping block-offs and shipping tape from openings in access panel. Inlet hoods are shipped unassembled and must be assembled in place. See Fig. 23. The inlet hood consists of a hood, 2 side plates, and an inlet screen.

Install inlet hoods using screws provided.

NOTE: Hoods must be assembled in place on the access panel. Flanges on hood and side plates go to the inside of the access panel.

Install inlet screen on each inlet hood using speed clips and screws provided. Attach flue hoods (see Fig. 24) to access panel using screws provided. Hoods go over each combustion air outlet.

Sub-assemble flue deflector baffle inside the flue deflector hood as shown in Fig. 25 and 26. Flue deflector baffle must be assembled and installed on the access panel so that the holes in the mounting flange are at the bottom. Install flue deflector hood over flue hoods. Be sure that deflector scoop is pointed up.

UNIT SIZES 054-074 — The 48 series high-heat units have 2 large inlet hoods, 2 small inlet hoods, 3 flue hoods, and 3 flue deflector hoods. See Fig. 27 and 28. The 48 series low-heat units have one large inlet hood, 2 small inlet hoods, 2 flue hoods, and 2 flue deflector hoods. (See Fig. 27 and 28).

Remove shipping block-offs and shipping tape from openings in access panels. Inlet hoods are shipped unassembled and must be assembled in place. See Fig. 23. Inlet hoods consist of a hood, 2 side plates, and an inlet screen.

Install large and small inlet hoods using screws provided.

NOTE: Hoods must be assembled in place on the access panel. Flanges on hood and side plates go to the inside of the access panel.

Install inlet screen in each inlet hood using speed clips and screws provided. Attach flue hoods (see Fig. 24) to access panel using screws provided. Hoods go over each combustion air outlet.

Sub-assemble flue deflector baffle inside flue deflector hood as shown in Fig. 29. Install flue deflector hoods over flue hoods. (See Fig. 27.)

NOTE: Be sure deflector hoods are installed as shown and not upside down. The holes in the mounting flange must be at the bottom when installed on access panel.

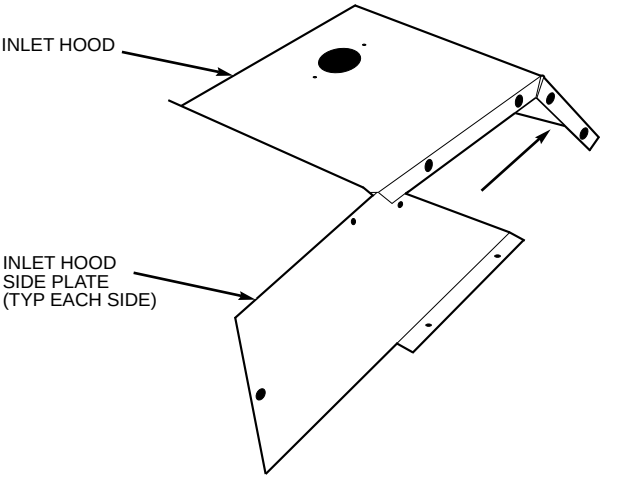

Fig. 23 — Inlet Hood

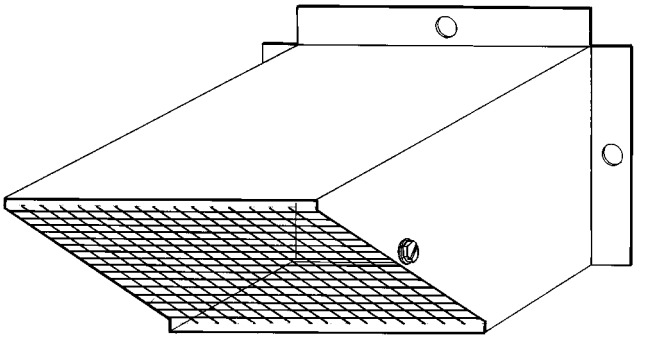

Fig. 24 — Flue Hood

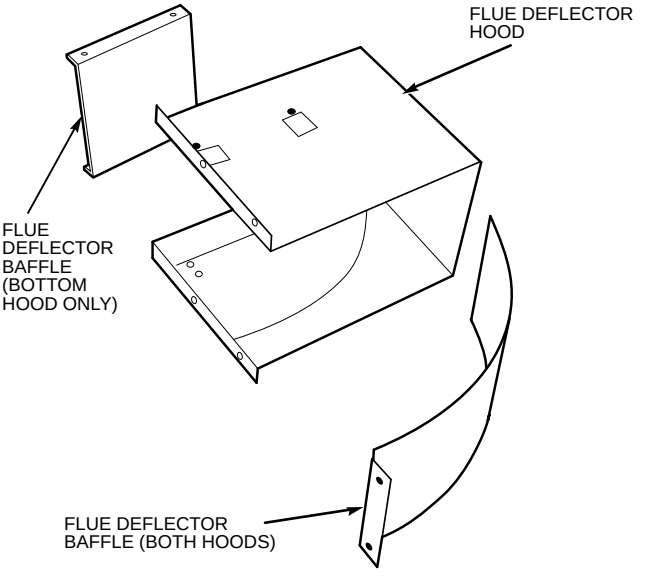

Fig. 25 — Flue Deflector Baffles, 034,044 Units

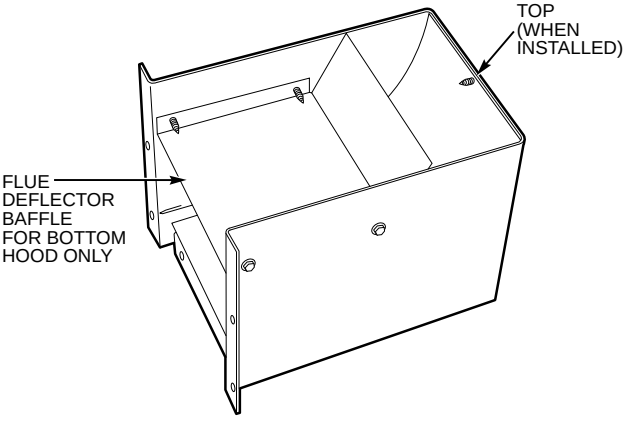

Fig. 26 — Flue Deflector Hood, 034,044 Units (Assembled)

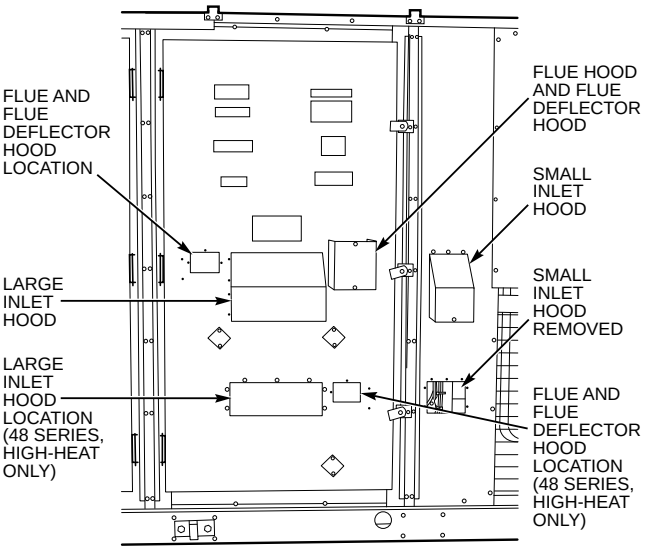

Fig. 27 — Flue/Inlet Hood, 054-074 Units

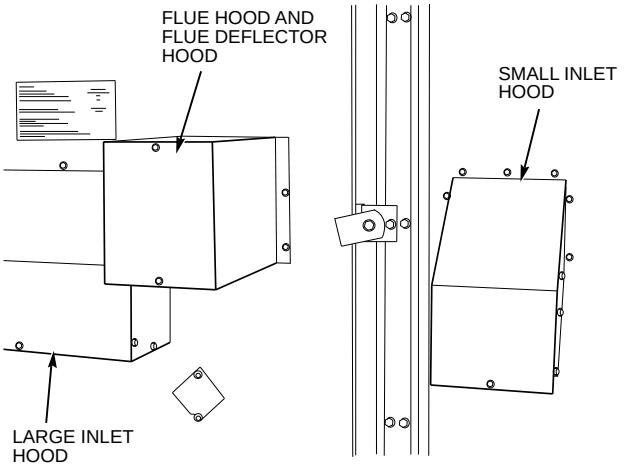

Fig. 28 — Flue/Inlet Hood Close-Up

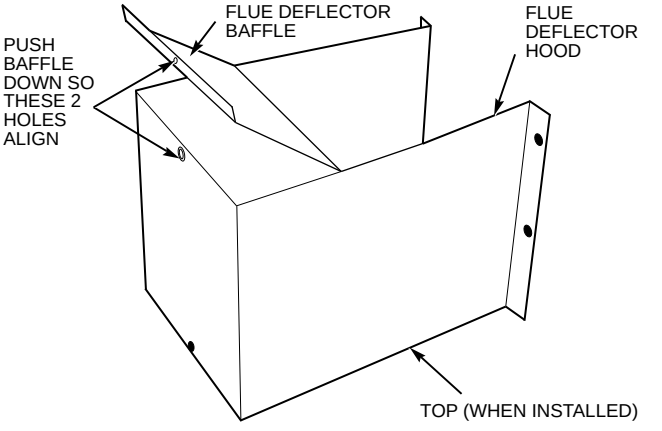

Fig. 29 — Flue Deflector Baffle, 054-074 Units (Assembled)

PRE-START-UP

Unit Preparation — Check to see that unit has been installed in accordance with these Installation Instructions and all applicable codes.

Compressor Mounting — Loosen compressor hold-down bolts until sidewise movement of the washer under each holddown bolt head can be obtained. Do not loosen completely, as bolts are self-locking and will maintain adjustment.

Evaporator-Fan Shipping Brackets — Evaporator-fan shipping brackets (4 per unit) must be removed from each corner of the fan sled before starting unit.

UNIT SIZES 034 AND 044

1. To remove brackets, raise fan sled by turning adjusting bolt counterclockwise until spring is compressed slightly.
2. Remove screws holding shipping bracket to unit cross rail.
3. Remove shipping bracket (top of bracket is slotted so that it will slide out).
4. After removing all shipping brackets, level fan sled using the adjusting screws. On all 4 corners, dimension from cross rail to fan sled should be as shown in Fig. 30.

UNIT SIZES 054-074 — To remove shipping brackets, remove the 6 screws holding each bracket to the cross rail. There are 8 brackets per unit. See Fig. 30 or 31.

After removing all shipping brackets, level fan sled using the adjusting screws. On all 4 corners dimension from cross rail to fan sled should be as shown in Fig. 30 or 31.

Internal Wiring — Check all electrical connections in the unit control box; tighten as required.

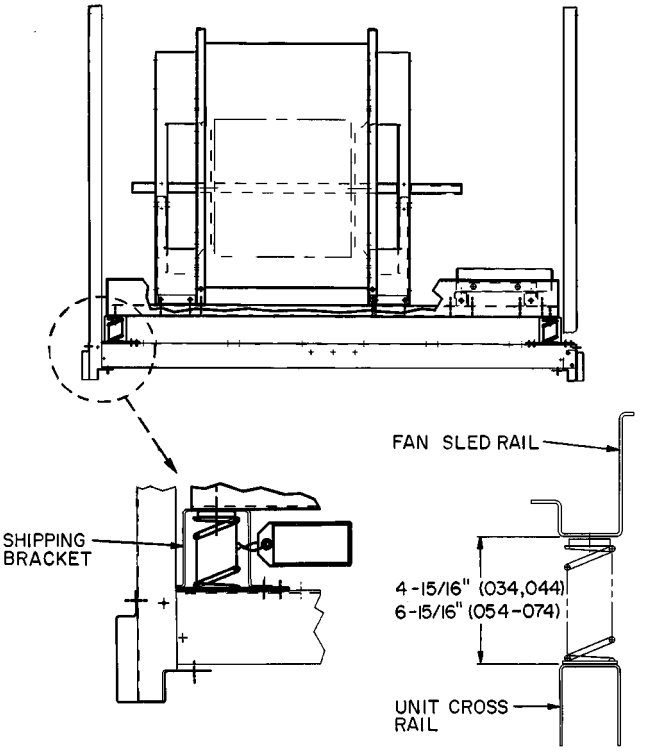

Fig. 30 — Shipping Brackets; 034,044 Units and 50 Series Vertical Discharge 054-074 Units

Refrigerant Service Valves — All units have a Schrader-type service port on both suction lines. Be sure that caps on the ports are tight. All units have discharge and suction service valves on each compressor and a service valve on each liquid line. Be sure the valves are open before starting unit.

Crankcase Heaters — The crankcase heaters must be firmly locked into the compressors. The crankcase heaters are energized when there is power to the unit. *Crankcase heaters must be energized with discharge and suction service valves open for at least 24 hours prior to unit start-up in order to remove liquid refrigerant from the compressor crankcase and to prevent oil foaming.*

Compressor Oil — Check that compressor oil is visible in the sight glass of the compressor. All units are factory charged with oil. See Table 8. Observe oil level closely at start-up. If oil level is below the sight glass and cannot be seen, add oil until the level is approximately 1/4 of sight glass. See Carrier Standard Service Techniques, Refrigerants section, for procedures to add or remove oil.

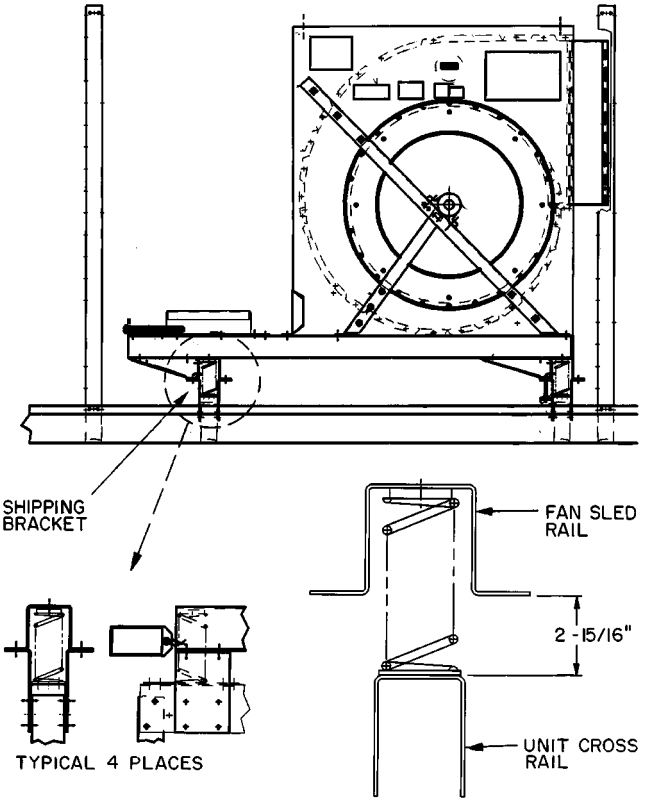

Fig. 31 — Shipping Brackets; 48 Series 054-074 Units and 50 Series Horizontal Discharge 054-074 Units

Table 8 — Oil Charge

UNIT SIZE	OIL CHARGE (pints)
034	16 (8 each circuit)
044	28 (14 each circuit)
054	33 (19 ckt 1, 14 ckt 2)
064	38 (19 each circuit)
074	38 (19 each circuit)

If oil charge is above sight glass, do not remove any oil until the compressor crankcase heater has been on for at least 24 hours. When additional oil or a complete charge is needed, use only Carrier-approved compressor oil.
Approved oils:

Texaco, Inc. ..... Capella WF-32
Shrieve Chemical Co. ..... Zerol 150 (Synthetic)
Witco Co. ..... Suniso 3GS

Do not reuse drained oil and do not use any oil that has been exposed to the atmosphere.

Gas Manifold Pressure (48 Series Units Only) — Check pressure to ensure it matches the pressure stamped on the valve body. See Gas Valve Adjustment section on page 50 for more details.

Unit Voltage — Be sure power source agrees with the unit nameplate rating.

Leak Test and Dehydration — Be sure there are no refrigerant leaks. All units are shipped with a complete operating charge of R-22 (Tables 1A and 1B) and should be under sufficient pressure for leak testing after installation. If there is no system pressure, add refrigerant until a pressure is observed and then check for leaks. After leaks are repaired, remove and recover refrigerant from the system. For leak testing procedures, see Carrier Standard Service Techniques, Refrigerants section. Do not use the system compressors to remove refrigerant from the system.

Evaporator-Fan Belts, Pulleys, and Sheaves — Belts, pulleys, and sheaves are factory installed. All pulleys are nonadjustable.

See Tables 1A and 1B for fan shaft center distance ranges and shaft sizes when making selections for field-supplied drives. See Tables 9A and 9B for a complete listing of field-supplied pulleys and belt connections.

Check the lubrication of fan and motor bearings. Bearings are shipped full of grease for corrosion protection and may run warm temporarily on start-up until the excess grease has discharged. Check bearing setscrews for tightness. Also check the tightness of the setscrews on the fan wheel and on the fan and motor sheaves. Check fan shaft bearing mountings for tightness.

Recheck sheave alignment and belt tension. See Adjustments section on page 46 for instructions.

Hand-turn the fan to make sure the fan wheel does not rub on the fan housing. The fan shaft and motor shaft must be free wheeling before power is applied to the unit.

Following the necessary electrical checks, check for fan vibration. If excessive vibration occurs, check for:
- drive misalignment
- mismatched belts
- wheel or sheaves loose on shaft
- loose bearings
- loose mounting bolts
- motor out of balance
- sheaves eccentric or out of balance
- wheel out of balance (replace if necessary)

Table 9A — Field-Supplied Evaporator-Fan Pulley Data, 034,044 Units

IFM Hp	IFM RPM	MOTOR PULLEY			BLOWER PULLEY			BELTS		
		No. Grooves	Type	Size (in.)	No. Grooves	Type	Size (in.)	Quantity	Type	Size (in.)
7½	435	2	BK	3.4	2	B5V	13.6	2	BX	61.8
	500			3.9						
	590			4.6						
	650			5.1						
	720			5.6						64.8
	820			6.4						
10	500	2	BK	3.9	2	B5V	13.6	2	BX	61.8
	550		B5V	4.3	2	B5V	13.7	2	5VX	63.0
	575			4.5						
	650			5.1						
	730			5.7						
	830			6.5						66.0
15	550	2	B5V	4.3	2	B5V	13.7	2	5VX	63.0
	625			4.9						
	675			5.3						
	730			5.7						
	800			6.3						
	880			6.7						66.0
20	575	2	B5V	4.5	2	B5V	13.7	2	5VX	63.0
	625			4.9						
	700			5.5						
	750			5.5						
	830			6.5						
	880			6.9						66.0

IFM — Indoor (Evaporator) Fan Motor

Table 9B — Field-Supplied Evaporator-Fan Pulley Data, 054-074 Units

IFM Hp	IFM RPM	MOTOR PULLEY			BLOWER PULLEY			BELTS					
								48 Series and 50 Series Horizontal Discharge Units			50 Series Vertical Discharge Units		
		No. Grooves	Type	Size (in.)	No. Grooves	Type	Size (in.)	Quantity	Type	Size (in.)	Quantity	Type	Size (in.)
15	450	2	B5V	4.3	2	B5V	18.5	2	5VX	118	2	5VX	132
	470						16.1			115			125
	485						15.5						123
	575			4.5			13.7			112			
	650			5.1									
	725			5.7									
20	405	3	B5V	4.3	3	B5V	18.5	3	5VX	123	3	5VX	132
	470						16.1			118			125
	485						15.5						
	575	2		4.5	2		13.7	2		115	2		123
	660			5.1									
	725			5.7									
25	405	3	B5V	4.3	3	B5V	18.5	3	5VX	123	3	5VX	132
	470						16.1			115			125
	485						15.5						123
	575	2		4.5	2		13.7	2	B5V		2		
	700			5.5									
	725			5.7									
30	470	4	B5V	4.3	4	B5V	16.1	4	5VX	118	4	5VX	123
	485						15.5						
	530	3		4.7	3		15.5	3			3		
	600	2		5.5	2		15.5	2			2		
	660			5.9									
	730			6.5									

IFM — Indoor (Evaporator) Fan Motor

Check rotation of wheel with arrow on the fan housing. Check fan speed with a strobe-type tachometer, or use this formula:

$$\text{Fan Rpm} = \frac{\text{motor rpm x motor sheave pitch diameter (in.)}}{\text{fan sheave pitch diameter (in.)}}$$

(Obtain motor rpm from the fan motor nameplate and read sheave pitch diameters marked on the fan and motor sheaves.)

Example:

Nameplate motor rpm 1760
Motor sheave pitch diameter (in.) 6.4
Fan sheave pitch diameter (in.) 12.4

$$\text{Fan Rpm} = \frac{1760 \times 6.4}{12.4} = 908 \text{ Rpm}$$

The maximum allowable fan speed for the supply-air fan is 900 rpm for 034 and 044 units and 750 rpm for 054-074 units. The maximum rpm for the power exhaust is 1300 rpm for 034 and 044 units and 925 rpm for 054-074 units. Excessive fan speed may result in condensate carryover from the evaporator coil, fan motor overload, or wheel failure. See Table 10 for Air Quantity Limits.

Table 10 — Air Quantity Limits (cfm)

UNIT SIZE	MINIMUM	MAXIMUM
034	6,000	15,000
044	8,000	20,000
054	10,000	25,000
064	12,000	30,000
074	14,000	30,000

Condenser Fans and Motors — Each unit has multiple condenser fans and motors; these are positioned at the factory. See Fig. 32 for correct location of fan in orifice. Check that fan propeller rotation is correct; it should be counterclockwise when facing the fans. If fan propeller rotation is incorrect, switch motor leads.

Return-Air Filters — Check that the correct filters are installed in the filter rack. See Tables 1A and 1B for quantities and sizes. Access is through the door marked FILTER SECTION. Do not operate the unit without return-air filters.

Economizer Inlet Screens — Check that they are in place before operating the unit.

Economizer Dampers — With no power to the unit, the economizer outdoor-air dampers should be fully closed. Check by opening the access door marked FILTER SECTION. On units with economizer, be sure economizer minimum position is set at the desired setting. Be sure hood is installed properly.

25% Outdoor-Air Damper — On units without economizer, be sure 25% outdoor-air damper is set at the desired position. Also, be sure hood is installed properly.

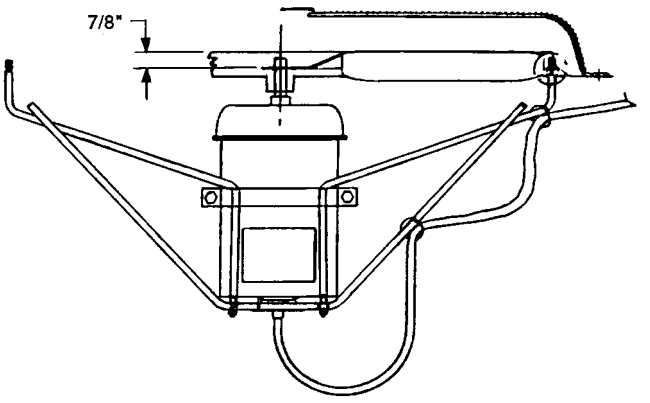

Fig. 32 — Condenser-Fan Adjustment

Initial Check

IMPORTANT: Do not attempt to start unit, even momentarily, until all items on the Start-Up Checklist and the following steps have been completed.

1. Verify unit has been installed per the Installation section of this literature.
2. Certify that all auxiliary components (sensors, controls, etc.) have been installed and wired to the control boxes per these instructions, the Controls and Troubleshooting literature (DK,DY,NB,NP units only), and the unit wiring label diagrams.
3. Verify that pressure hoses (static, duct, etc.) are properly attached, routed, and free from pinches or crimps that may affect proper control operation.
4. Set any control configurations that are required (field-installed accessories, etc.). The unit is factory configured for all appropriate factory-installed options with the applicable controls programmed to the default values. See unit Controls and Troubleshooting literature for applicable configuration values.
5. Enter unit set points (if applicable). The unit is shipped with the set point default values shown in the Controls and Troubleshooting literature (as applicable). If a different set point is required, change per the example shown under Set Point Function section in appropriate unit Controls and Troubleshooting literature.
6. Configure schedule subfunctions (if applicable): occupied, unoccupied, and holiday periods. See Schedule Function section in Controls and Troubleshooting literature for details on setting periods.
7. Verify that control time periods programmed meet current requirements.
8. Check all electrical connections to be sure they are tight.

START-UP

General

1. Put the ON/OFF switch in the ON position. Close the control circuit breaker (CCB), which will energize the control circuit and the crankcase heaters.
2. For PIC and VAV units, refer to Controls and Troubleshooting literature for quick test details.
3. Complete Pre-Start-Up section items and Start-Up Checklist.

Operating Sequences — Base unit operating sequences are presented below. Refer to unit Controls and Troubleshooting literature for details on VAV and PIC controls operation.

COOLING, UNITS WITHOUT ECONOMIZER — Unit power on, system selector switch set at COOL or AUTO. position, fan switch set at AUTO. position.

On a call for cooling, Y1 on the thermostat subbase closes, energizing compressor no. 1 as first stage of cooling. (Compressor no. 1 is always the larger of the 2 unit compressors.) If cooling load cannot be satisfied with only first-stage cooling, Y2 on the thermostat will close, energizing compressor no. 2.

Condenser fans are energized with compressor no. 1. The no. 1 fan runs continuously while the unit is on mechanical cooling; the no. 2 fan is cycled on and off in response to outdoor ambient temperature for head pressure control. Check cooling effects at a setting below room temperature. Reset thermostat at a setting above room temperature. Compressors will shut off.

HEATING, UNITS WITHOUT ECONOMIZER

48 Series Low-Heat Units — Unit power on, thermostat system switch set at HEAT or AUTO. position, and fan switch set at AUTO. position.

First-stage thermostat (W1) calls for heat. Time-delay relay (built into constant volume control board), controlling evaporator fan, begins timer sequence (55 ± 10-second delay). Induced-draft contactor closes and induced-draft motor starts.

Centrifugal switch closes. Pilot valve opens, allowing gas to flow to first-stage pilot. Spark ignitor ignites pilot flame. Sensor detects flame, energizes main gas valve coil and main gas valve opens. Gas flows to main burners and first-stage burners ignite. Spark ignitor shuts off and pilot remains on.

The spark ignitor will continue to spark for 90 seconds until pilot flame is sensed. If the pilot fails to ignite or the sensor fails to detect flame, the pilot valve closes and the spark ignitor shuts off for 300 seconds (5 minutes). During this time the induced draft motor remains on to purge any unburnt gas from the combustion tubes. This ignition sequence will repeat indefinitely.

When time-delay sequence is complete, time-delay relay closes and evaporator-fan motor starts.

When additional heat is needed on 034,044 units, W2 is energized and a second coil in the main gas valve is energized. This brings on an additional stage of heat. When second-stage thermostat is satisfied, the second-stage gas valve coil is deenergized.

When additional heat is needed on 054-074 units, W2 is energized, and pilot valve number 2 opens. Gas flows to second-stage pilot, and spark ignitor ignites pilot flame. Sensor detects flame, energizes the main gas valve coil, and main gas valve number 2 opens. Gas flows to main burners and second-stage burners ignite. Second-stage spark ignitor shuts off. When second-stage thermostat is satisfied, the second-stage gas valve coil is deenergized.

When the first-stage thermostat is satisfied, first-stage main gas valve and the pilot valve close. Induced-draft motor shuts off. Time-delay relay (built into constant volume control board) opens and timer sequence begins. When sequence is complete (after 110 ± 5 seconds) evaporator-fan motor shuts off.

48 Series High-Heat Units — Unit power on, thermostat system switch set at HEAT or AUTO. position, and fan switch set at AUTO. position.

First-stage thermostat (W1) calls for heat. Time-delay relay (built into constant volume control board), controlling evaporator fan, begins timer sequence (approximately 55 ± 10-second delay).

When time-delay sequence is complete, time-delay relay closes and evaporator fan starts.

When evaporator fan starts, airflow switch closes, closing induced draft contactor, and induced draft motor starts.

Centrifugal switch closes. Pilot valve opens, allowing gas to flow to first-stage pilot. Spark ignitor ignites pilot flame. Sensor detects flame, energizes main gas valve coil, and main gas valve opens. Gas flows to main burners and first-stage burners ignite. Spark ignitor shuts off and pilot remains on.

The spark ignitor will continue to spark for 90 seconds until pilot flame is sensed. If the pilot fails to ignite or the sensor fails to detect flame, the pilot valve closes and the spark ignitor shuts off for 300 seconds (5 minutes). During this time the induced draft motor remains on to purge any unburnt gas from the combustion tubes. This ignition sequence will repeat indefinitely.

When additional heat is needed, W2 is energized. Pilot valve no. 2 opens, allowing gas to flow to second-stage pilot. Spark ignitor ignites pilot flame. Sensor detects flame, energizes main gas valve coil, and main gas valve no. 2 opens. Gas flows to main burners and second-stage burners ignite. Second-stage spark ignitor shuts off. When the second-stage thermostat is satisfied, W2 is deenergized and the second induced-draft motor and gas valve are shut off.

When the first-stage thermostat is satisfied, first-stage main gas valve and the pilot valve close. Induced draft motor shuts off. Time-delay relay (built into constant volume control board) opens and timer sequence begins. When sequence is complete (after 110 ± 5 seconds) evaporator-fan motor shuts off.

50 Series Units — Unit power on, system selector switch set at HEAT position, fan switch set at AUTO. position.

On a call for heating, W1 on the thermostat closes, and evaporator fan and the first stage of electric heat are energized. On a further drop in room temperature, W2 on the thermostat closes, energizing the second stage of electric heat.

NOTE: Units equipped with low electric heat option have only one stage. Reset thermostat to a setting below room temperature. Electric heat and evaporator fan shut off.

COOLING, UNITS WITH ECONOMIZER — With subbase switch set at COOL position and fan switch set at AUTO. position, evaporator fan is energized when Y1 on thermostat closes. If enthalpy is below setting on enthalpy switch, the economizer outdoor-air dampers will modulate open to satisfy the cooling requirement. If outdoor air alone will not meet the cooling requirements, Y2 on the thermostat will close energizing compressor no. 1 to work in conjunction with the modulating economizer to meet the cooling requirement. While the unit is operating using outdoor air, compressor no. 2 cannot be energized. If enthalpy is above setting on enthalpy switch, the economizer outdoor-air dampers move to the minimum (ventilation) position, and condenser fan numbers 1 and 2 cycle on and off as described in Cooling, Units Without Economizer section on page 41.

NOTE: If fan switch is ON position and the room thermostat is satisfied, the outdoor-air dampers move to the minimum position.

HEATING, UNITS WITH ECONOMIZER — Operation is the same as described in Heating, Units Without Economizer sections on page 41, except that the outdoor-air dampers move to the minimum position on a call for heat.

VENTILATION-AIR CIRCULATION (Continuous Fan) — Turn unit power on. Set system selector switch at OFF, HEAT, or COOL position, and set fan switch at ON position.

Evaporator-fan contactor is energized through the switch on the thermostat and the evaporator fan runs continuously. The damper moves to the minimum position.

AUTOMATIC CHANGEOVER USING AUTOMATIC CHANGEOVER THERMOSTAT — Turn unit power on. Set system selector switch at AUTO. position.

When the temperature of the conditioned space rises to the cooling selector lever setting, unit automatically switches from heating to cooling mode. When the temperature of the conditioned space falls to the heating selector switch setting, unit automatically changes from cooling to heating mode. The thermostat is interlocked so that cooling and heating systems do not operate at the same time.

Head Pressure Control — All units have a fan cycling thermostat which cycles the no. 2 condenser fan. This switch opens at 60 F ± 3° F and closes at 70 F ± 3° F. This allows the unit to operate down to 45 F outdoor ambient temperature.

NOTE: Accessory −20 F Low Ambient Kit is available, which allows mechanical cooling to −20 F outdoor ambient. See accessory installation instructions for mounting and operation details.

SERVICE

Service Access — All unit components can be reached through clearly labeled hinged access doors. These doors are not equipped with tiebacks, so if heavy duty servicing is needed, either remove them or prop them open to prevent accidental closure.

Each door is held closed with 3 latches. The latches are secured to the unit with a single 1/4-in. −20 x 1/2-in. long bolt. See Fig. 33.

To open, loosen the latch bolt using a 7/16-in. wrench. Pivot the latch so it is not in contact with the door. Open the door. To shut, reverse the above procedure.

NOTE: Disassembly of the top cover may be required under special service circumstances. It is very important that the orientation and position of the top cover be marked on the unit prior to disassembly. This will allow proper replacement of the top cover onto the unit and prevent rainwater from leaking into the unit.

> IMPORTANT: After servicing is completed, make sure door is closed and relatched properly, and that the latches are tight. Failure to do this can result in water leakage into the indoor-air section of the unit.

COMPRESSORS

Sizes 034 and 044 — Access to the compressors is through the doors on the condenser end of the unit. This door also provides access to the discharge and suction service valves, the crankcase heaters, and the high- and low-pressure switches. Compressor no. 1 is always the compressor on the left when facing main control box.

Sizes 054-074 — The oil pump end (compressor access) of each compressor is readily accessible from sides of unit as shown in Fig. 17. Access the motor end of the compressor through the condenser end of the unit or by removing compressor.

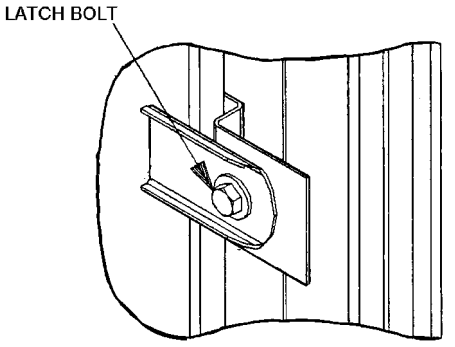

Fig. 33 — Door Latch

LIQUID SERVICE VALVES, FILTER DRIERS, AND SIGHT GLASSES

Sizes 034 and 044 — Access to these components is through the access panel on the right side of the unit. See Fig. 34. There is also a Schrader port in each suction line that is accessible through this same panel. When charging unit, route service line through the round holes and replace panel to minimize air bypass.

Sizes 054-074 — Access to these components is from the side of the unit as shown in Fig. 34.

EVAPORATOR-FAN MOTORS, PULLEYS, AND BELTS — Access to these components is through the 2 doors labeled FAN SECTION on each side of the unit.

POWER EXHAUST MOTORS, PULLEYS, AND BELTS — Access to these components is through the door below the side economizer hoods on either side of the unit. See Fig. 35 and 36.

UNIT CONTROL BOX — Access to this component is through the doors marked ELECTRICAL SECTION on the condenser end of the unit (when facing the condenser coil).

GAS HEAT SECTION (48 Series Units Only) — Access to the gas heat section is through the door labeled HEAT SECTION on the left side of the unit (when facing condenser end). See Fig. 37 and 38.

All gas system components are in the gas section.

MAIN AND PILOT BURNERS (48 Series Units Only) — At the beginning of each heating season, inspect for deterioration due to corrosion or other causes. Observe the pilot and main burner flames and adjust if necessary. See Automatic Pilot Adjustment or Main Burners Adjustment Section on pages 49 and 50.

FLUE GAS PASSAGEWAYS (48 Series Units Only) — The flue collector box and heat exchanger cells may be inspected by removing the combustion air blower(s), flue box cover, and main burner assembly. See Fig. 39 and 40. If cleaning is required, remove heat exchanger baffles through the flue box and clean all parts with a wire brush. When replacing heat exchanger baffles, be sure to replace screw through clamp on baffle retaining rod into the vestibule plate.

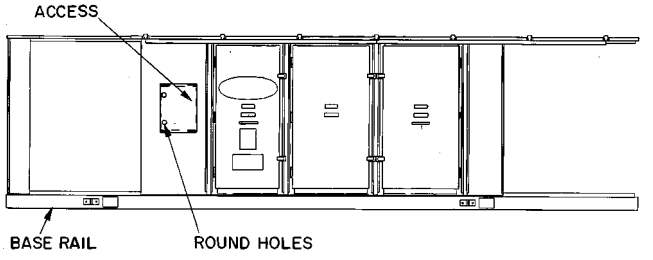

Fig. 34 — Typical Filter Drier and Liquid Service Valve Access

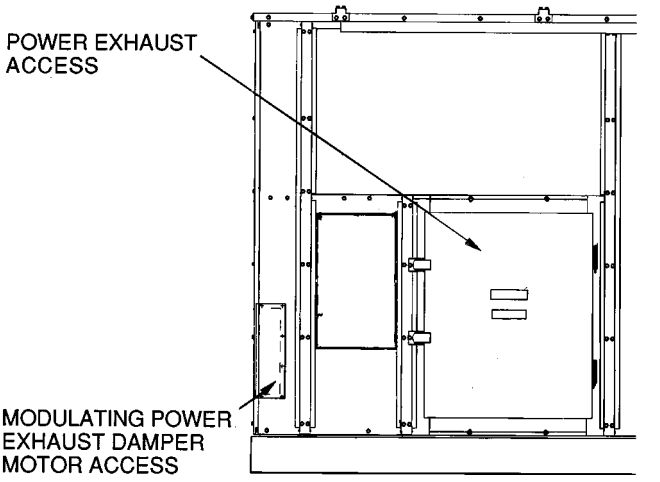

Fig. 35 — Modulating Power Exhaust Damper Motor Access, 034 and 044 Units

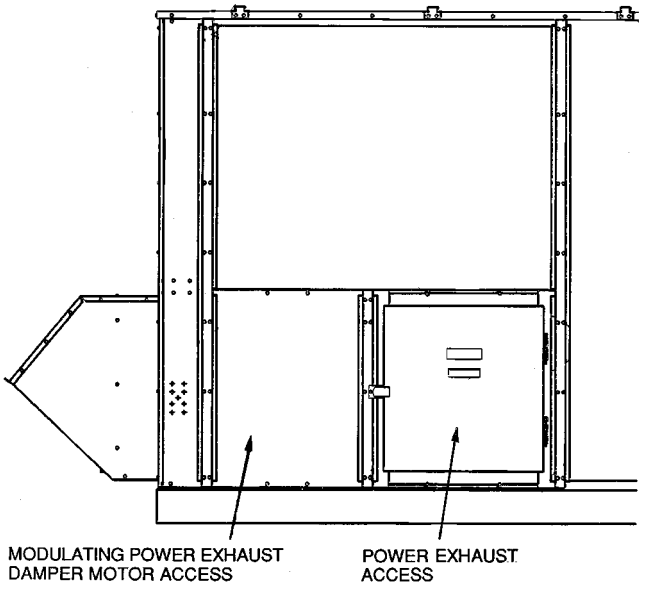

Fig. 36 — Modulating Power Exhaust Motor Access, 054-074 Units

COMBUSTION AIR BLOWER (48 Series Units Only) — Clean periodically to assure proper airflow and heating efficiency. Inspect blower wheel every fall and periodically during the heating season. For first heating season, inspect blower wheel bimonthly to determine proper cleaning frequency. If cleaning is required, remove blower assembly from unit and then disassemble and clean. See Fig. 41.

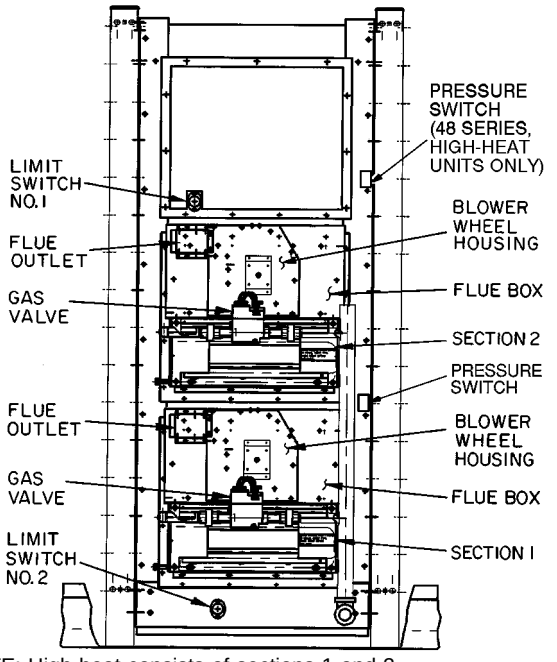

NOTE: High heat consists of sections 1 and 2.
Low heat consists of section 1 only.

Fig. 37 — Gas Section Detail, 48 Series 034 and 044 Units

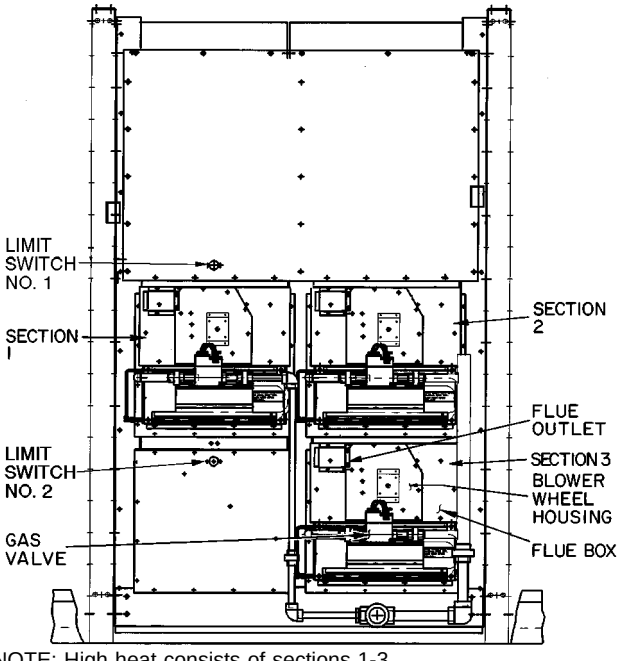

NOTE: High heat consists of sections 1-3.
Low heat consists of section 1 and 2 only.

Fig. 38 — Gas Section Detail, 48 Series 054-074 Units

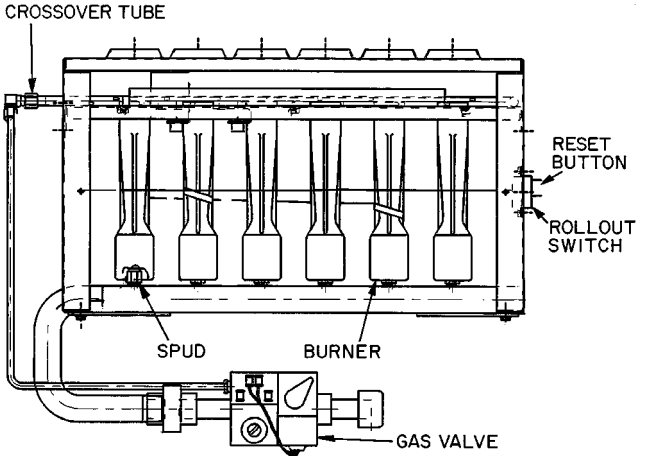

Fig. 39 — Burner Section Detail (48 Series Units Only)

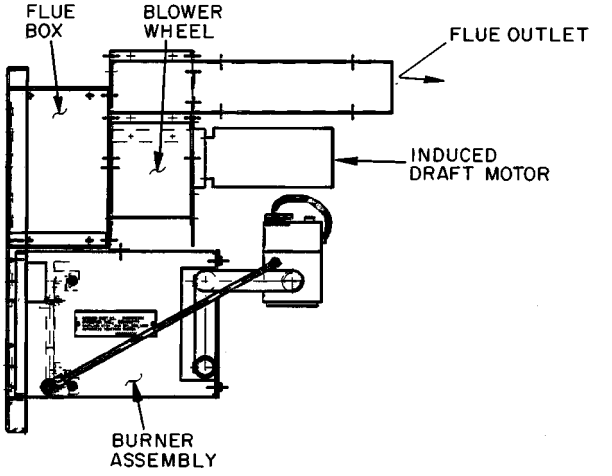

Fig. 40 — Flue Box Assembly, 48 Series Units Only (Shown with Burner Assembly)

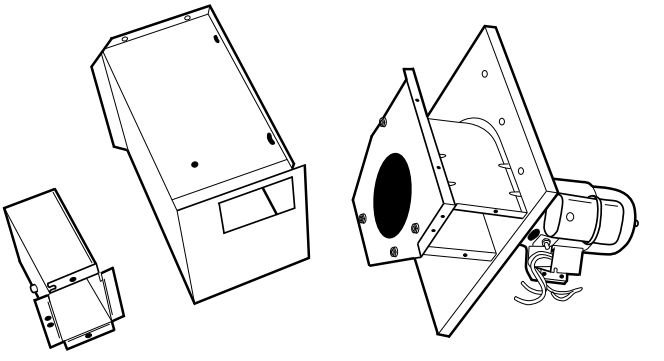

Fig. 41 — Combustion Blower Removal

ECONOMIZER DAMPER MOTOR — On units so equipped, the economizer motor is located in the mixing box section. Access to it is through the doors labeled FILTER SECTION on the sides of the unit.

ELECTRIC HEATER CONTROL BOX (50 Series Units Only) — Access to the electric heater control box is through the door on the right side of the unit next to the condenser section. See Fig. 16 and 17.

The electric heater control box contains:

- power terminal block HTB, HTB1, HTB2 (not used on all voltages)
- fuse blocks FB1, FB2, etc.
- fuses FU (3 per fuse block)
- heater contactors HC1, HC1A, etc.
- plug No. 20 (PL20)

HEATER BOX (50 Series Units Only) — Access to the heater box is through the door on the left side (sizes 034 and 044) or right side (sizes 054-074) of the unit next to the condenser section. See Fig. 16 and 17. See Fig. 42 for heater box contents.

NOTE: Only the heater element contactors are located in the heater box. The heaters are located in the unit airstream.

25% OUTDOOR-AIR DAMPER — Access to adjust the damper is through the hoods. Remove filters to gain access into unit to adjust linkage arms.

MODULATING POWER EXHAUST DAMPER MOTOR — The modulating power exhaust damper motor is located in the return-air end of the unit.

On unit sizes 034 and 044, it is accessed by removing the access panel on the left-hand corner post. See Fig. 35.

> IMPORTANT: When replacing panel, be sure to properly secure it in order to prevent water from being drawn into the unit.

On unit sizes 054-074, the motor is accessed through the small door below the side economizer hoods on the left side of the unit. See Fig. 36.

RETURN-AIR FILTERS — Access to these filters is through the door marked FILTER SECTION. Filters in upper and lower bag filter tracks can only be removed from the left side of the unit (when facing condenser end).

CONDENSER FANS AND FAN MOTORS — Remove the wire fan guard on top of the unit to gain access to the condenser fans and motors.

INLET GUIDE VANE MOTOR — The inlet guide vane motor is located on the evaporator-fan sled on the side opposite the fan motor. See Fig. 43. Access is through the door labeled FAN SECTION on the left side of the unit.

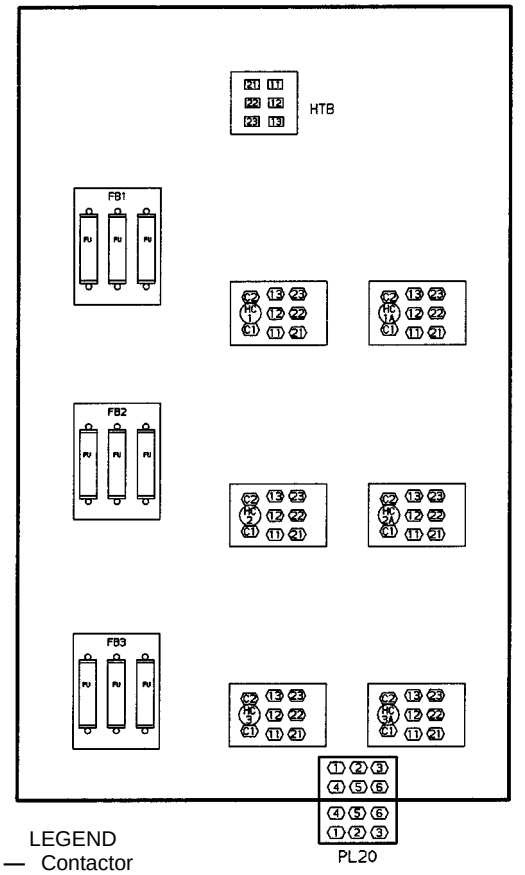

LEGEND
C — Contactor
FB — Fuse Block
FU — Fuse
HC — Heat Element Contactor
HTB — Heater Terminal Block
PL — Plug Assembly

Fig. 42 — Typical Electric Heat Control Box

Cleaning — Inspect unit at the beginning of each heating and cooling season and during each season as operating conditions may require.

Clean condenser coil with a vacuum cleaner, fresh water, compressed air, or a bristle brush (not wire). Coil cleaning should be a part of the planned maintenance program. Clean evaporator coil with a stiff bristle brush (not wire), vacuum cleaner, or compressed air.

Check and clean condensate drain annually at the start of the cooling season.

Replace return-air filters at the start of each heating and cooling season or as often as necessary during each season, depending on operating conditions. See Tables 1A and 1B for filter types, quantities, and sizes.

1. Remove economizer outdoor-air filters from the hoods by removing the filter retainers.
2. Clean filters with steam or hot water and mild detergent.
3. Reinstall filters in hoods after cleaning. Never replace cleanable filters with throwaway filters.

Lubrication

COMPRESSORS — Each compressor is correctly charged at the factory. Refer to 06D and 06E Compressor Service Manuals if additional information regarding compressor lubrication system is required. See Compressor Oil section on page 38 and Table 8.

FAN SHAFT BEARINGS — Lubricate fan shaft bearings at least once a year with suitable bearing grease. Extended grease lines are provided on pulley side of blower. Typical lubricants are given below:

MANUFACTURER	LUBRICANT
Texaco	Regal AFB-2*
Mobil	Mobilplex EP No. 1
Sunoco	Prestige 42
Texaco	Multifak 2

*Preferred lubricant because it contains rust and oxidation inhibitors.

INLET GUIDE VANE BEARINGS (Units With Optional Inlet Guide Vanes) — These bearings are oil impregnated. Lubricate annually with a few drops of nondetergent SAE 20 oil.

FAN MOTOR BEARINGS — The condenser- and evaporator-fan motors have sealed bearings so no field lubrication is required.

DOOR HINGES — All door hinges should be lubricated at least once a year.

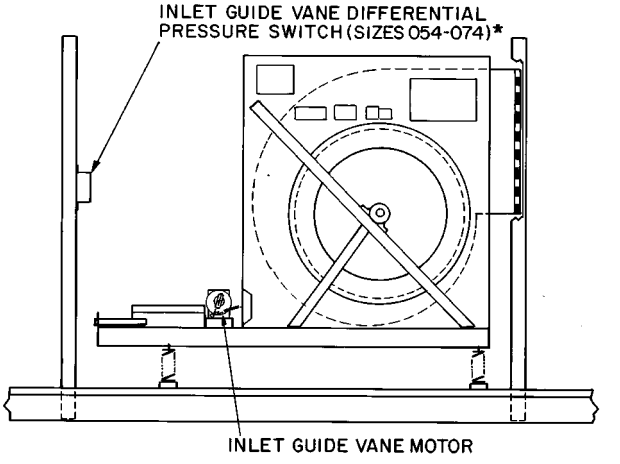

Fig. 43 — Inlet Guide Vane Motor

Adjustments

EVAPORATOR FAN AND POWER EXHAUST MOTOR PLATE — Adjust using a 15/16-in. wrench on the adjusting bolts:

1. Loosen holddown bolts. (See Fig. 44.)
2. Turn the adjusting bolts to move the motor mounting plate toward or away from the fan to loosen or tighten the belts. Make the same number of turns to each bolt.
3. Retighten holddown bolts.

MODULATING POWER EXHAUST DIFFERENTIAL PRESSURE SWITCH — On 034,044 units, the differential pressure switch is located in the auxiliary control box. The auxiliary control box is mounted in the corner next to the power exhaust motor door. To gain access to the auxiliary control box, remove the auxiliary control box cover. When replacing the auxiliary control box cover, be sure to secure the cover properly in order to prevent water from being drawn into the auxiliary control box.

On 054-074 units, the differential pressure switch is mounted below the auxiliary control box next to the access door labeled FILTER SECTION.

INLET GUIDE VANE DIFFERENTIAL PRESSURE SWITCH (Units With Optional Inlet Guide Vanes and Static Pressure Control) — On 034,044 units, the inlet guide vane differential pressure switch is located in the auxiliary control box. The auxiliary control box is mounted in the corner of the unit under the side air hood that is next to the access door marked FILTER SECTION. To gain access to the auxiliary box, remove the auxiliary control box cover. When replacing the auxiliary control box cover, be sure to secure the cover properly in order to prevent water from being drawn into the auxiliary control box.

On 054-074 units, the inlet guide vane differential pressure switch is mounted on an upright located behind the evaporator-fan motor. See Fig. 43.

BELT INSTALLATION AND TENSIONING

> IMPORTANT: When installing or replacing belts, always use a complete set of new, matched belts to prevent potential vibration problems. Mixing belts often results in premature breakage of the new belts.

1. Turn off unit power.
2. Adjust motor plate so belts can be installed without stretching over the grooves of the pulley. (Forcing the belts can result in uneven belt stretching and a mismatched set of belts.)
3. Before tensioning the belts, equalize belt slack so that it is on the same side of the belt for all belts. Failure to do so may result in uneven belt stretching.
4. Tighten belts using the motor plate adjusting bolts.
5. Adjust until proper belt tension (1/2-in. deflection with one finger) is obtained. Be sure to adjust both adjusting bolts the same number of turns.

   NOTE: Check the tension at least twice during the first day of operation, as there is normally a rapid decrease in tension until the belts have run in. Check tension periodically thereafter and keep it at the recommended tension.

With the correct belt tension, belts may slip and squeal momentarily on start-up. This slippage is normal and disappears after wheel reaches operating speed. Excessive belt tension shortens belt life and may cause bearing and shaft damage.

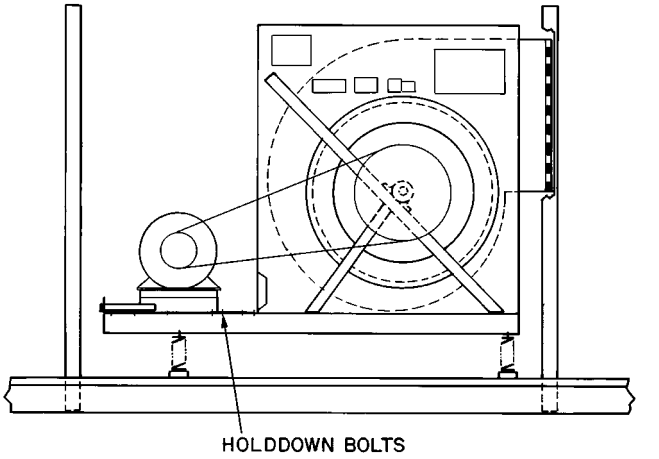

Fig. 44 — Motor Plate Adjustment

PULLEY ALIGNMENT — For proper belt life, the motor and fan pulleys must be properly aligned. To check, first turn off unit power. Place a straightedge against the motor and fan pulleys. See Fig. 45. If the pulleys are properly aligned, the straightedge should be parallel to the belts.

If they are not parallel, check that the motor shaft and fan shaft are parallel. If they are not, adjust the motor plate adjusting bolts until they are.

After verifying that the shafts are parallel, loosen the setscrews on the motor pulley. Move pulley on the shaft until the pulleys are parallel. To move the sheave on the shaft, loosen the belts. If necessary, blower sheave can also be moved on the shaft.

INSTALLING ALTERNATE MOTOR PULLEY (Evaporator Fan Only) — On all units, the alternate motor pulley is field-supplied. To install the alternate pulley:

1. Turn off unit power.
2. Loosen belts using motor adjusting bolts until belts can be removed without stretching them over the grooves of the pulley.
3. Remove belts.
4. Loosen setscrews on motor pulley.
5. Slide pulley off motor shaft. Make sure setscrews on new pulley are loose.
6. Slide new pulley onto fan shaft and align it with the fan pulley as described in Pulley Alignment section above.
7. Tighten setscrews.
8. Install belts and tension properly as described in Pulley Alignment section above.

CONDENSER FAN ADJUSTMENT

1. Turn off unit power.
2. Remove fan guard and loosen fan hub setscrew.
3. See Fig. 32 and adjust fan height using a straight edge laid across the fan deck.
4. Tighten setscrew and replace rubber hubcap to prevent hub from rusting to the motor shaft. Fill hub recess with Permagum if hub has no rubber hubcap.
5. Replace fan guard.

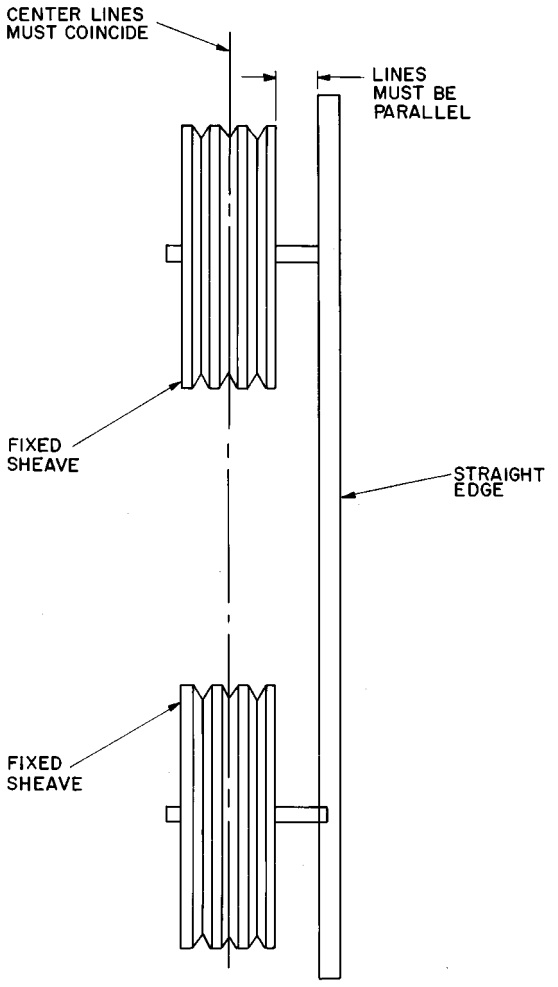

Fig. 45 — Pulley Alignment

25% OUTDOOR-AIR DAMPER — See Manual Outdoor-Air Damper section on page 10 for adjustment details.

REFRIGERANT CHARGE — All units are shipped with a complete operating charge of R-22. See unit nameplate and Tables 1A and 1B for amount of charge. When adding a complete charge, evacuate system using standard evacuating procedures and weigh in the specified amount of charge. All units have charging charts for each refrigerant circuit. See Fig. 46-59.

PILOT LIGHT OFF (48NP Units Only) — If pilots do not light as described in Heating section on page 41, be sure that pilot orifice is unobstructed, then check for spark ignitor malfunctions as follows:

1. Turn off the control circuit breaker (CCB) to shut off control supply power to ignitor control pack (ICP).
2. Check that spark gap is ⅜ in. ± 1⁄32 inch.
3. Check that ICP is securely grounded.
4. Check that the high-voltage lead is securely connected between the ICP and the electrode body.
5. Turn on CCB to restore power to ICP. Check that 24 v is supplied to terminal TH of the ICP.
6. Check unit label diagram for correct terminal usage if any wires are removed.

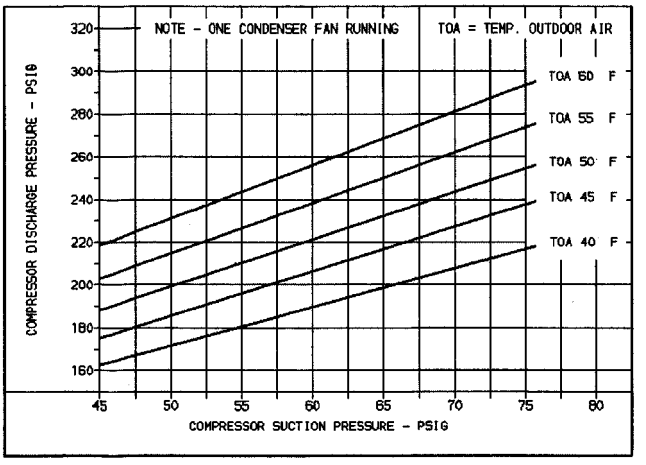

Fig. 46 — Charging Chart, 034 Units; System 1, One Condenser Fan Running

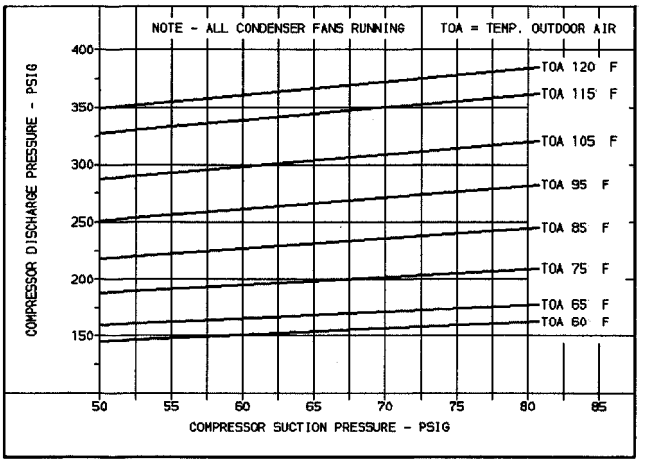

Fig. 47 — Charging Chart, 034 Units; System 1, All Condenser Fans Running

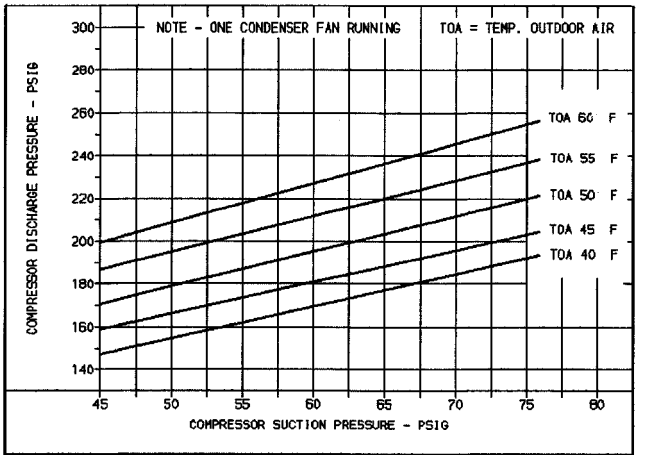

Fig. 48 — Charging Chart, 034 Units; System 2, One Condenser Fan Running

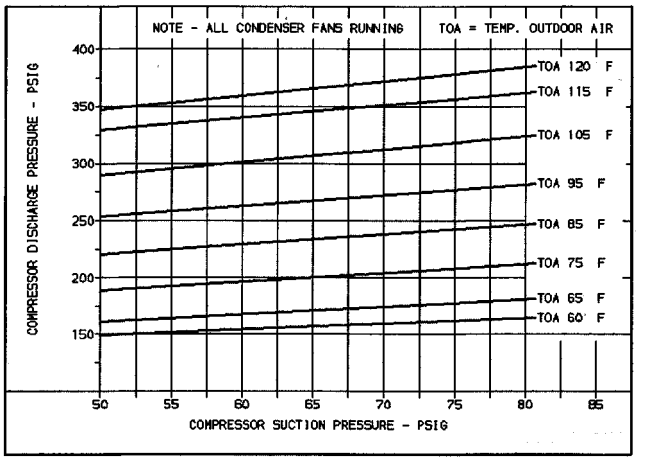

Fig. 49 — Charging Chart, 034 Units; System 2, All Condenser Fans Running

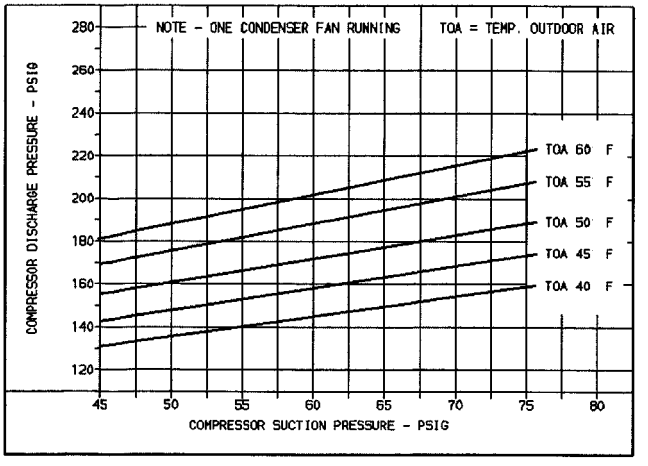

Fig. 50 — Charging Chart, 044 Units; System 1, One Condenser Fan Running

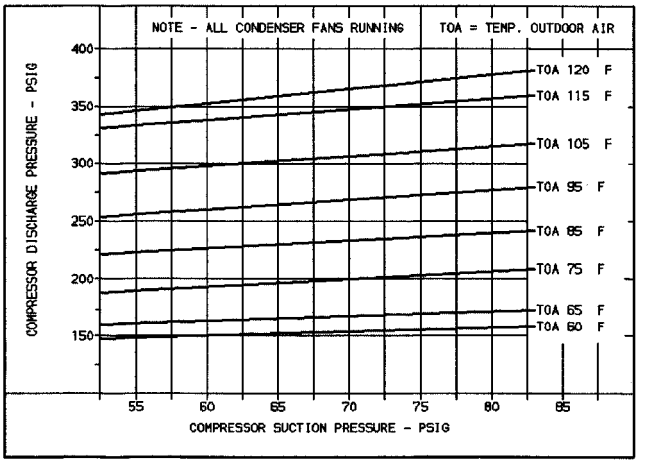

Fig. 51 — Charging Chart, 044 Units; System 1, All Condenser Fans Running

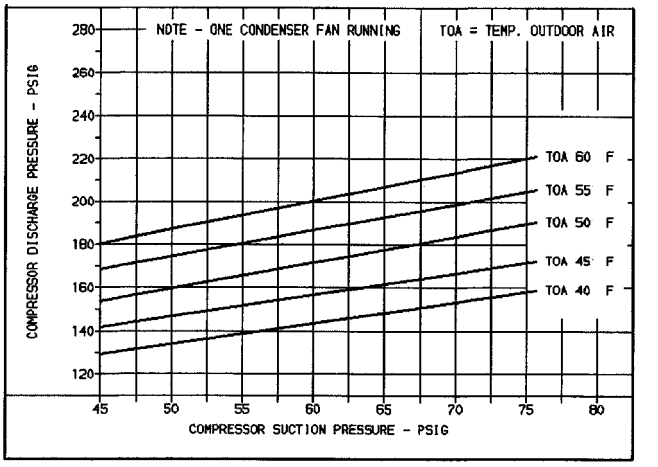

Fig. 52 — Charging Chart, 044 Units; System 2, One Condenser Fan Running

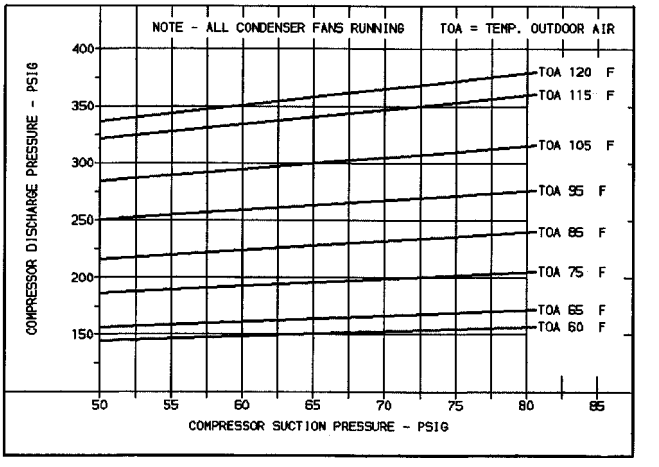

Fig. 53 — Charging Chart, 044 Units; System 2, All Condenser Fans Running

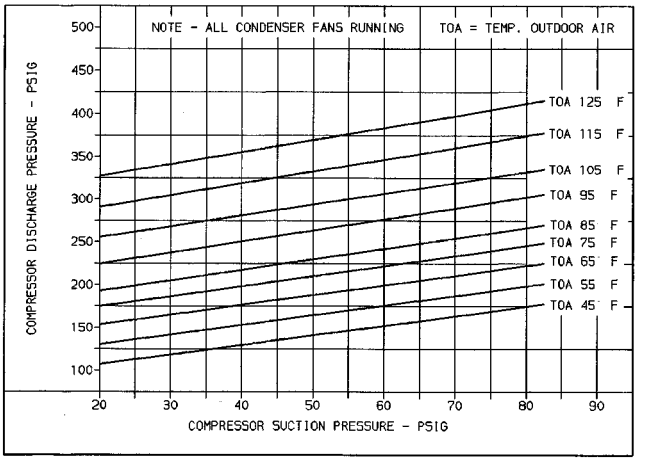

Fig. 54 — Charging Chart, 054 Units; System 1, All Condenser Fans Running

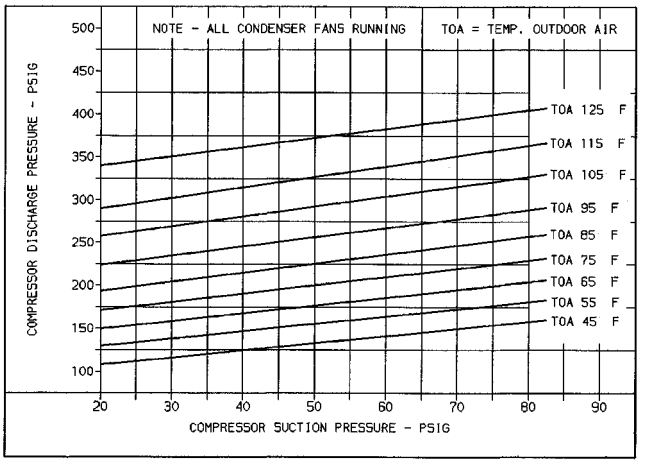

Fig. 55 — Charging Chart, 054 Units; System 2, All Condenser Fans Running

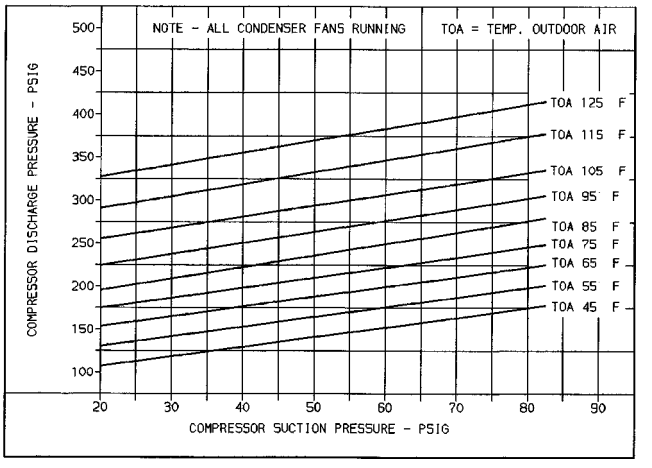

Fig. 56 — Charging Chart, 064 Units; System 1, All Condenser Fans Running

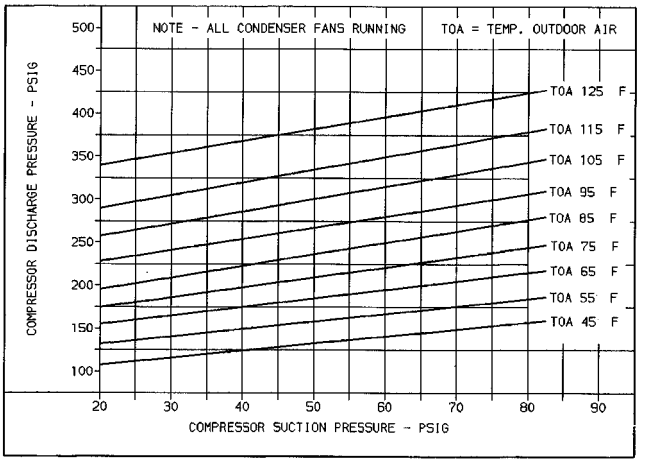

Fig. 57 — Charging Chart, 064 Units; System 2, All Condenser Fans Running

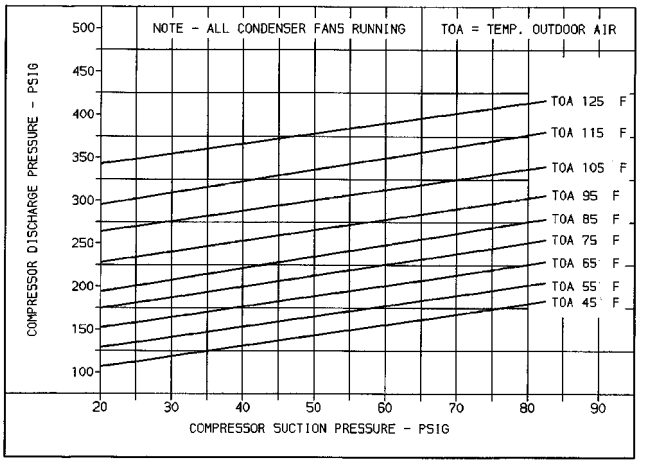

Fig. 58 — Charging Chart, 074 Units; System 1, All Condenser Fans Running

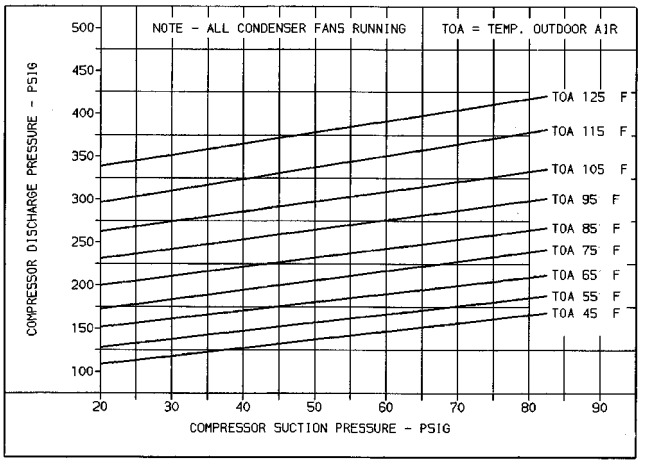

Fig. 59 — Charging Chart, 074 Units; System 2, All Condenser Fans Running

AUTOMATIC PILOT ADJUSTMENT (48 Series Units Only)

1. Set system selector switch at OFF position to shut off unit. Turn off power to unit.
2. Remove screw cap cover on pilot gas valve to expose adjusting screw.
3. To ensure that main burners do not ignite, remove wire from gas valve terminal 2. Tape wire. Do not allow wire to be grounded.
4. Turn on power to unit. Set system selector switch to HEAT position and set thermostat to a setting that will call for heat. Pilot ignites.
5. With a small screwdriver, turn adjustment screw until flame fully engulfs sensor.
6. Replace cap on pilot gas valve. Turn off power to unit. Return valve(s) to original position.
7. Check for proper burner operation by cycling the burners. Wait 30 seconds between burner cycles.
8. Check that all panels are closed securely before leaving the unit.

GAS VALVE ADJUSTMENT (48 Series Units Only) — The gas valve opens and closes in response to the thermostat or limit control. When power is supplied to valve terminal 3 (D1 on low heat), the pilot valve opens to the preset position. When power is supplied to terminal 2 (W1 on low heat), the main valve opens to its preset position.

The regulator factory manifold pressure setting 2.9 in. wg and is stamped on the valve body.

Manifold pressure is the pressure at the factory-supplied pressure tap on the manifold downstream of the gas valve. This is not the same as the pressure at the tap on the gas valve body. Always use the tap on the manifold to read manifold pressure.

To adjust regulator:

1. Set thermostat at setting for no call for heat.
2. Turn main gas valve to OFF position.
3. Install a suitable pressure measuring device.
4. Set main gas valve to ON position.
5. Set thermostat to call for high fire (W2).
6. Remove screw cap or plastic cover covering the regulator adjustment screw.
7. Turn adjustment screw clockwise to increase pressure or counterclockwise to decrease pressure.
8. Once desired pressure is established, remove pressure-measuring device and replace screw cap.

MAIN BURNERS ADJUSTMENT (48 Series Units Only) — Main burners are factory set and should require no adjustment. However, if burner adjustment is necessary:

1. Perform Automatic Pilot Adjustment (page 49).
2. Turn gas valve to ON position. Allow unit to operate at least 15 minutes with heat section access panel closed.
3. Open heat section access panel.
4. Loosen primary air shutter and adjust to a minimum opening of ⅝ inch.
5. Retighten primary air shutter and close access panel.

To check ignition of main burners and fan switch operation, move thermostat dial above and below room temperature several times, pausing at least one minute between cycles.

Main Burner Removal (48 Series Units Only)

NOTE: For high-heat units, the side posts must be removed before the burner assembly can be removed.

1. Shut off main gas valve.
2. Shut off power to unit.
3. Unplug PL9 (and PL10 on high-heat) and all sensor and ignitor wires.
4. Disconnect gas connection(s) from between gas valve(s) and field-supplied piping. See Fig. 37 and 38.
5. Remove 2 screws securing burner assembly to unit.
6. Slide burner assembly from unit.

Switch Adjustment — All units with an economizer have an auxiliary switch located on the economizer damper motor. This switch is factory set to prevent the power exhaust from operating when the economizer damper is less than 50% open. If other than the factory setting is desired, follow the steps below.

⚠ CAUTION

Do not turn motor shaft by hand or with a wrench. Damage to the gear train will result.

1. Remove top cover from motor to gain access to motor terminals and cam adjustments.
2. Disconnect controller from motor. Connect RED, WHITE, and BLUE terminals on the 135-ohm manual potentiometer to corresponding RED, WHITE, and BLUE terminals on the motor. Connect 24-vac power to Terminals 1 and 2. See Fig. 60.
3. Adjust the 135-ohm potentiometer so that the motor shaft turns to the position where auxiliary equipment is to be switched.
4. Adjust auxiliary cam by inserting a ⅛-in. straight blade screwdriver into slot on cam and moving TOP of screwdriver to the right or left. See Fig. 61.
5. To close auxiliary switch RED and BLUE contacts as the motor travels open (energizing the power exhaust motor), the switch differential can only be 10 degrees on both switches. To adjust either cam, perform the following steps:
   a. If RED and BLUE contacts are open, rotate the cam counterclockwise until the contacts close.
   b. If the RED and BLUE contacts are closed, rotate the cam clockwise until the contacts open.

Refrigerant Feed Components — Each refrigerant circuit (2 per unit) has all the necessary refrigerant controls.

Thermostatic Expansion Valve (TXV) — On size 034, each circuit has one. On size 044, each circuit has 2. The superheat is nonadjustable. On sizes 054-074, each circuit has 2 TXVs on which superheat may be adjusted if absolutely necessary.

The TXV is set to maintain 10 to 13 F superheat leaving the evaporator coil. It controls the flow of refrigerant to the evaporator coils.

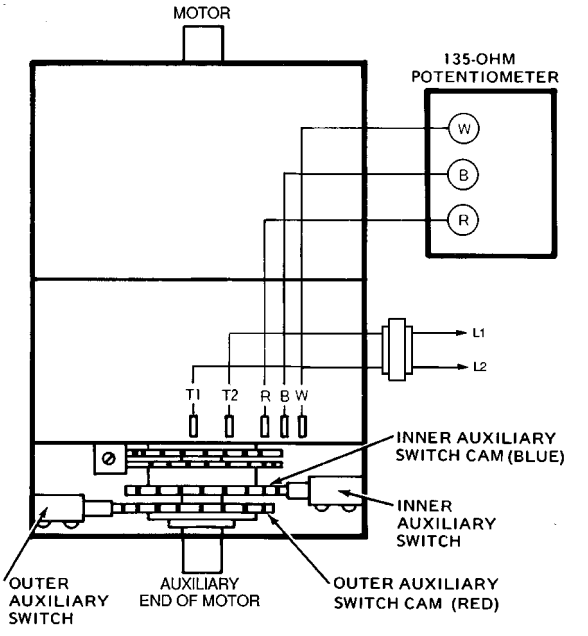

Fig. 60 — Auxiliary Switch Stroke Adjustment

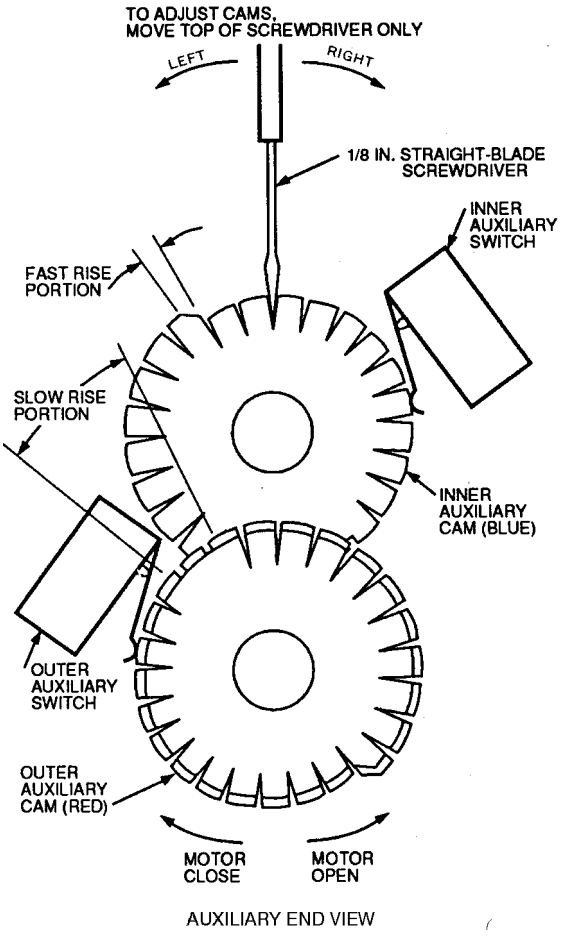

Fig. 61 — Auxiliary Switch Adjustment

Moisture/Liquid Indicator — A clear flow of liquid refrigerant indicates sufficient charge in the system. Bubbles indicate undercharged system or the presence of noncondensables. Moisture in the system measured in parts per million (ppm) changes the color of the indicator:

Green — moisture below 45 ppm (dry)
Chartreuse — 45 to 130 ppm (caution!)
Yellow — moisture above 130 ppm (wet)

Change filter driers at the first sign of moisture in the system. See Carrier Charging Handbook for more information.

> IMPORTANT: Unit must be in operation at least 12 hours before moisture indicator can give an accurate reading. With unit running, indicating element must be in contact with liquid refrigerant to give a true reading.

Filter Drier — Replace whenever the moisture/liquid indicator shows moisture in the system.

Liquid Line Service Valve — Located immediately ahead of the filter drier, this valve has a 1/4-in. flare connection for field charging. With the liquid circuit shut, the compressor can be used to pump the refrigerant down into the high side. The refrigerant can then be stored there by closing the compressor discharge valve.

Compressor Discharge Service Valve — Each compressor has one.

Compressor Suction Service Valve — Each compressor has one.

Protective Devices

COMPRESSOR PROTECTION

Overcurrent — Each compressor has one manual reset, calibrated trip, magnetic circuit breaker. Do not bypass connections or increase the size of the circuit breaker to correct trouble. Determine the cause and correct it before resetting the breaker.

Overtemperature — Each 06D compressor has an internal protector to protect it against excessively high discharge gas temperatures. Each 06E compressor has an external discharge gas thermostat. See Fig. 62. They will reset, but the circuit will automatically be locked out by the control board. Unit must be manually reset by interrupting control power.

Crankcase Heater — Each compressor has a crankcase heater to prevent absorption of liquid refrigerant by oil in the crankcase when the compressor is idle. Since 115-v power for the crankcase heaters is drawn from the unit control circuit, main unit power must be on for the heaters to be energized.

> IMPORTANT: After a prolonged shutdown or service job, energize the crankcase heaters for 24 hours before starting the compressor.

Compressor Lockout — If any of the safeties (compressor internal thermostat [06D compressors only], high-pressure, or low-pressure) trip, or if there is a loss of power to the compressors, the compressors will be locked out. To reset DJ,DW units, manually move the thermostat setting. To reset DK,DY,NB,NP units, consult the controls and troubleshooting literature for the appropriate unit for details.

EVAPORATOR-FAN MOTOR PROTECTION — A manual reset, calibrated trip, magnetic circuit breaker protects against overcurrent. Do not bypass connections or increase the size of the breaker to correct trouble. Determine the cause and correct it before resetting the breaker.

CONDENSER-FAN MOTOR PROTECTION — Each condenser-fan motor is internally protected against overtemperature. They are also protected against a severe overcurrent condition by manual reset, calibrated trip, magnetic circuit breakers on a common circuit. As with the circuit breakers, do not bypass connections or increase breaker size to correct trouble. Determine the cause and correct it before resetting the breaker.

HIGH- AND LOW-PRESSURE SWITCHES — See Fig. 62 for compressor mounting locations. Settings for these switches are shown in Table 11. If either switch trips, that refrigerant circuit will be automatically locked out by the controls. To reset, interrupt control power.

NOTE: When a pressure transducer is used, the low pressure trip point is the same as the low-pressure switch.

Relief Devices — All units have relief devices to protect against damage from excessive pressures (i.e., fire). These devices protect the high and low side.

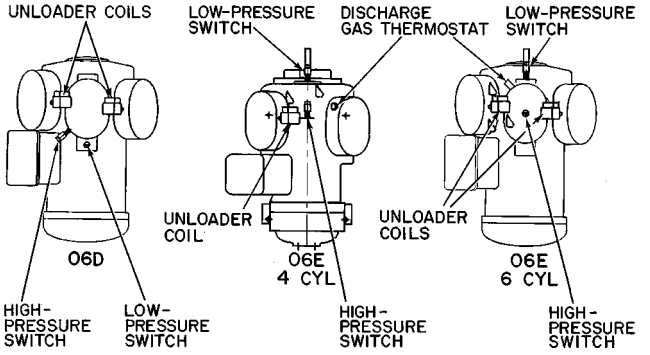

Fig. 62 — Typical Compressor Overtemperature, High- and Low-Pressure Switch Locations

Table 11 — Pressure Switch Settings (psig)

SWITCH	CUTOUT	CUT-IN
High	426 ± 7	320 ± 20
Low	27 ± 4	67 ± 7

Control Circuit, 115 V — This control circuit is protected against overcurrent by a 5-amp circuit breaker. Breaker can be reset. If it trips, determine cause of trouble before resetting.

Control Circuit, 24 V — This control circuit is protected against overcurrent by a 3.2-amp circuit breaker. Breaker can be reset. If it trips, determine cause of trouble before resetting.

Electric Heat (50 Series Units Only)

OVERCURRENT — Heaters are protected by fuses in the power circuit, located in the heater control box. As with circuit breakers, determine the cause of fuses tripping before replacing them. Do not replace with larger fuses. All fuses are 60 amp.

OVERTEMPERATURE — Heaters are protected by limit switches mounted in the heater box. They reset automatically once they cool.

Gas Heat (48 Series Units Only)

LIMIT SWITCHES — The maximum supply-air temperature is controlled by a limit switch located in the gas section. The limit is designed to trip at 100 F above the maximum temperature rise shown in Tables 1A and 1B.

When the limit trips, the gas valve is deenergized. Once the unit cools, the gas valve is reenergized.

ROLLOUT SWITCH — This switch senses any flame or excessive heat in the main burner compartment and deenergizes the gas valve. If this occurs, the gas heating system is locked out until the rollout switch is reset manually. Reset by pressing the button on the rollout switch. See Fig. 39.

When the rollout switch trips, it likely indicates a flue blockage. Inspect the unit for any obstruction in the flue system, for holes on the flue box, or for a defective centrifugal switch or loose combustion blower. See Fig. 63 for proper location of the rollout capillary.

TROUBLESHOOTING

Economizer — The economizer control consists of an electronic control board mounted on the back of the cover plate of the economizer motor with the adjustments and electrical plugs accessible through the top of the cover. The economizer control is factory wired to the terminals on the motor. All potentiometers and adjustments are a part of the control board.

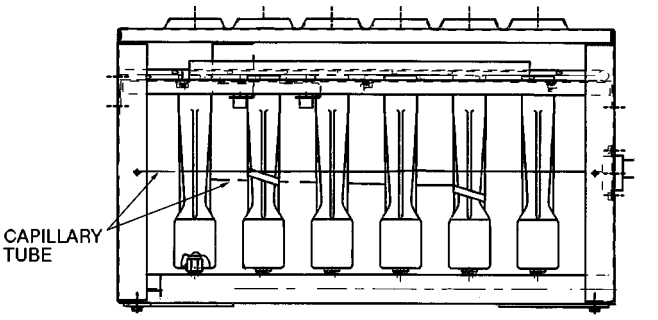

Fig. 63 — Location of Rollout Switch Capillary Tube

ECONOMIZER MOTOR CHECKOUT — The motor may be checked out separately from the control board. See Table 12 for motor checkout. To check out the motor, apply 24 VAC power to terminals T0 and T2 of the control board.

NOTE: The connections to motor terminals T1 and R must remain in place.

Table 12 — Economizer Motor Checkout

MOTOR TEST	PROCEDURE	EXPECTED RESULT AND RESPONSE
A	Remove wire connected to terminal W on the motor.	Motor drives open. If not, replace the motor.
B	Remove wire connected to terminal B on the motor, leaving W wire disconnected (Test A).	Motor drives closed. If not, replace the motor.

CONTROL BOARD CHECKOUT — To check out the control board motor, conduct the following 4 tests.

Test 1:

1. Apply 24 VAC power to terminals T0 and T2 of control board.
2. Remove mixed air sensor connected between terminals S1 and S2.
3. Remove outdoor-air enthalpy sensor between terminals ++ and SO.
4. Refer to Table 13.

Table 13 — Economizer Control Board Checkout, Test 1

MOTOR TEST	PROCEDURE	EXPECTED RESULT AND RESPONSE
A	Turn minimum position potentiometer fully counterclockwise.	Motor drives closed. If not, check minimum position jumper between terminals Z and Y, and check terminal W and T1 connections to motor.
B	Turn minimum position potentiometer fully clockwise.	Motor drives open. If not, check terminal B and R connections to the motor.

Test 2:

1. Apply 24 VAC power to terminals T0 and T2 of the control board.
2. Apply 24 v between terminals 1 and T2, and jumper terminal T0 to terminal 1.
3. Remove the mixed-air sensor connected between terminals S1 and S2, and replace it with a 5490-ohm resistor.
4. Remove outdoor-air enthalpy sensor between terminals ++ and SO, and replace it with a 1.2 kOhm resistor.
5. Turn the minimum position potentiometer fully counterclockwise.
6. Refer to Table 14.

Table 14 — Economizer Control Board Checkout, Test 2

MOTOR TEST	PROCEDURE	EXPECTED RESULT AND RESPONSE
A	Turn enthalpy set point potentiometer to the A position.	1. The relays energize. If not, check return enthalpy resistor. If resistor is o.k., control board is faulty. 2. Motor drives open. If relays energize, but motor does not drive open, the control board is faulty.
B	Turn enthalpy set point potentiometer to the D position.	1. The relays deenergize. If not, control board is faulty. 2. Motor drives closed. If relays deenergize by motor does not drive closed, the control board is faulty.

Test 3:

1. Apply 24 VAC power to terminals T0 and T2 of the control board.
2. Apply 24 v between terminals 1 and T2, and jumper terminal T0 to terminal 1.
3. Remove the mixed-air sensor connected between terminals S1 and S2, and replace it with a 5490-ohm resistor.
4. Remove outdoor-air enthalpy sensor between terminals ++ and SO, and replace it with a 1.2 kOhm resistor.
5. Turn the minimum position potentiometer fully counterclockwise.
6. Turn enthalpy set point potentiometer to the A setting.
7. Refer to Table 15.

Table 15 — Economizer Control Board Checkout, Test 3

MOTOR TEST	PROCEDURE	EXPECTED RESULT AND RESPONSE
A	Turn mixed-air potentiometer to the midpoint position.	Motor should drive to mid-stroke with the set point set between 60 and 70 F. If not, the control board is faulty.
B	Turn mixed-air potentiometer fully counterclockwise.	Motor drives open, If not, the control board is faulty.
C	Turn mixed-air potentiometer fully clockwise.	Motor drives closed. If not, the control board is faulty.

Test 4

Refer to Table 16 for the correct procedure for test 4.

Unit Control Board Checkout — The following tools are required to perform the troubleshooting tasks detailed in this section:

- 1.5-v battery
- 2 sets of jumper wires with alligator clips
- Multimeter
- Toggle switch with 14-in. wires terminated with ¼-in. spade connectors

⚠ DANGER

Read these instructions completely before attempting to troubleshoot the control board. Failure to follow the steps precisely could result in damage to unit, personal injury, or death.

The control board checkout procedure consists of 2 parts: A basic check to verify availability of 24 and 115 v to the control board and a detailed check of each circuit within the board.

Table 16 — Economizer Control Board Checkout, Test 4

MOTOR TEST	PROCEDURE	EXPECTED RESULT AND RESPONSE
A (Outdoor-Air Sensor)	1. Connect the enthalpy sensor terminal + to terminal + on the motor. 2. Connect the positive terminal of a DC milliammeter to terminal S of the sensor. 3. Connect the negative terminal of a DC milliammeter to terminal S_O of the enthalpy board.	Milliammeter reading should be between 3 and 24 mA if the sensor is operating correctly. If the reading is 0 mA, the sensor is either wired backward or is defective.
B (Indoor-Air Sensor)	1. Connect the enthalpy sensor terminal + to terminal + on the motor. 2. Connect the positive terminal of a DC milliammeter to terminal S of the sensor. 3. Connect the negative terminal of a DC milliammeter to terminal S_R of the enthalpy board.	Milliammeter reading should be between 3 and 24 mA if the sensor is operating correctly. If the reading is 0 mA, the sensor is either wired backward or is defective.

BASIC CHECK — Refer to Fig. 64 for control board component identification.

NOTE: All plugs (except P1) are labeled for easy identification. Plug P1 can be identified by its orange color.

1. Turn unit power off. Disconnect plug P1 from control board.
2. Turn unit power on and check voltage across Pin R and Pin C at plug P1. If voltage reads 18 to 30 v, skip to Step 5.
3. Turn unit power off. Disconnect plug P3.
4. Turn unit power on and measure voltage across wires on plug P3, Pins 1 and 2 (wires coming from the unit). If voltage reads 18 to 30 v, there is either a bad connection between plug P3 and control board, or the control board is defective. Verify the connection at this point and proceed to Step 5. If there is no voltage, check the circuit breaker and transformer in the 24-v control circuit of the unit.
5. Turn unit power off and disconnect plug P4 from the control board.
6. Switch scale on meter to read 115 v.
7. Turn unit power on and check voltage across Pin 6 on plug 4 and unit ground (wires coming from the unit). If voltage reads 104 to 122 v, there is adequate power available to the board. Verify connection at this point and proceed to Step 8. If there is no voltage, check the circuit breaker and transformer in the 115-v control circuit of the unit.
8. After verifying that 24-v and 115-v supply power is available to the control board, turn unit power off and reconnect plugs P1, P3, and P4. Proceed to Detailed Check section below.

DETAILED CHECK

NOTE: Plug P1 must be disconnected in order to perform any of the troubleshooting steps detailed in this section. To save time, reconnect plug P1 only after you have completed all of the required troubleshooting.

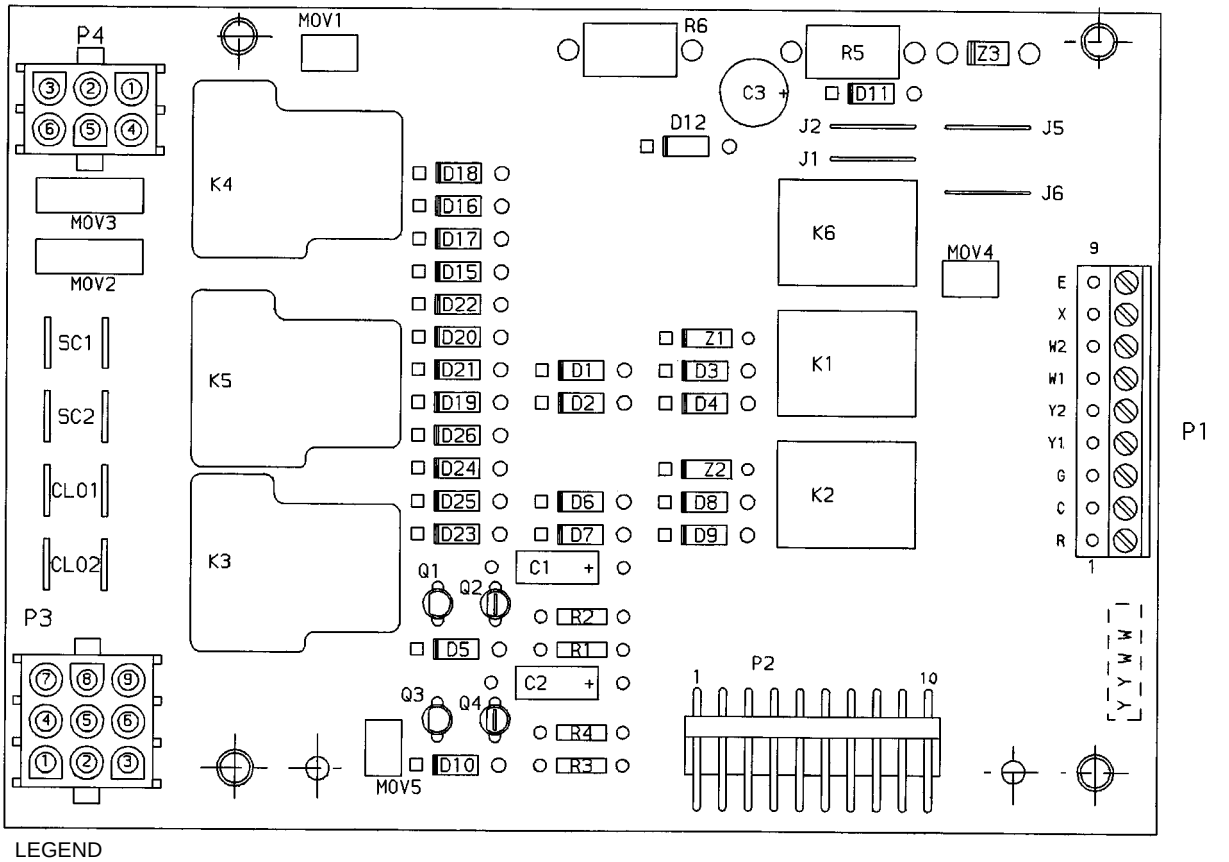

LEGEND

CLO — Compressor Lockout
P — Plug
SC — Safety Circuit

Fig. 64 — Control Board Component Arrangement

Symptom: Evaporator fan will not operate.

1. Turn unit power off and disconnect plug P1 from the control board.
2. Install a jumper across Pin R and Pin G at plug P1 on the control board.
3. Turn unit power on and check if the indoor (evaporator) fan contactor (IFC) coil has been pulled in. If the contactor has not been pulled in, check the voltage across the IFC coil. If there is voltage at this point, the IFC contactor is defective. If there is no voltage, proceed to Step 4.
4. Turn unit power off and disconnect plug P4 from the control board.
5. Turn unit power on and check for continuity across Pin 6 and Pin 3 at plug P4 on the control board. If there is no continuity, the board is defective. Replace control board. If there is continuity, then there is a bad connection between the board and plug P4. Correct the connection.
6. Turn unit power off. Reconnect plug P1 (if troubleshooting is complete) and plug P4.

Symptom: Condenser fan no. 1 will not operate.

1. Turn unit power off. Disconnect plugs P1 and P3 from the control board.
2. Check for continuity between Pin 8 at plug P3 on the control board and Pin Y1 at plug P1 on the control board. If there is no continuity, the board is defective. If there is continuity, either the connection is bad between plug P3 and the control board or the problem is external to the board. Reconnect plug P1 (if troubleshooting is complete) and plug P3 to the board.

Symptom: Condenser fan no. 2-5 will not operate.

1. Check operation of condenser fan no. 1. If fan no. 1 operates properly, the problem is external to the board.

Symptom: Compressor no. 1 will not operate.

1. Turn unit power off. Disconnect the 2 wires attached to the terminals marked SC1.
2. Check continuity between the 2 wires. If there is no continuity, the problem is external to the control board (possibly the pressure switches). If there is continuity, proceed to Step 3.
3. Reconnect the wires removed in Step 1.
4. With the unit power still off, disconnect plug P1 from control board. Install a jumper wire across Pin R and Pin Y1 at plug P1 on the control board.
5. Connect a voltmeter across the coil for compressor no. 1 contactor.
6. Energize unit and monitor the voltage for a few seconds.

IMPORTANT: Do not run compressor too long.

7. a. If proper voltage is indicated at the contactor, but contactor fails to close, replace contactor.
   b. If voltage is indicated for a few seconds (i.e., the contactor momentarily pulls in and is then deenergized), the compressor lockout (CLO) logic has shut down the unit. This is an indication that the board is not sensing proper compressor current, or that one of the safeties has tripped. Proceed to Step 8 to verify compressor lockout logic operation.

c. If proper voltage is indicated at the contactor and contactor closes, the board is operating properly.

8. To verify compressor lockout logic:
   a. Disconnect CLO sensor wires connected to CLO1 at the control board. Check wires for continuity. If there is no continuity, replace the sensor.
   b. Connect the multimeter to read voltage between Pin X at plug P1 and ground.
   c. Turn unit power on and check the multimeter. Within a few seconds the meter should indicate 24 v. If it does not, the control board is defective and must be replaced.
   d. Turn unit power off. Use a toggle switch to connect a fresh 1.5-v battery to the terminals marked CLO1 as shown in Fig. 65.

⚠ CAUTION

The negative (−Ve) pole of the battery must be connected to the inner terminal, and the positive (+Ve) pole must be connected to the outer terminal as shown in Fig. 65.

   e. Turn unit power on and use the toggle switch to make and break the connection between the outer CLO1 terminal and the positive (+Ve) pole of the battery.
   f. If the multimeter shows 24 v when the battery is disconnected and no voltage when the battery is connected, the CLO logic is good. If the multimeter shows no change, the CLO logic is defective and the board must be replaced.

Symptom: Compressor no. 2 will not operate.

1. Be sure unit power is off. Disconnect the 2 wires attached to the terminals marked SC2.
2. Check continuity between the 2 wires. If there is no continuity, the problem is external to the control board (possibly the pressure switches). If there is continuity, proceed to Step 3.
3. Reconnect the wires removed in Step 1.
4. With unit power still off, disconnect plug P1 from the control board and install jumper wire across Pins R and Y2 at plug P1.
5. Connect a voltmeter across the coil for compressor no. 2 contactor.
6. Energize unit and monitor the voltage for a few seconds.

IMPORTANT: Do not run compressor too long.

7. a. If proper voltage is indicated at the contactor, but contactor fails to close, replace contactor.
   b. If voltage is indicated for a few seconds (i.e., the contactor momentarily pulls in and is then deenergized), the Compressor Lockout (CLO) logic has shut down the unit. This is an indication that the board is not sensing proper compressor current, or that one of the safeties has tripped. Proceed to Step 8 to verify compressor lockout logic operation.
   c. If proper voltage is indicated at the contactor and contactor closes, the board is operating properly.

8. To verify compressor lockout logic:
   a. Disconnect CLO sensor wires connected to CLO2 at the control board. Check wires for continuity. If there is no continuity, replace the sensor.
   b. Connect the multimeter to read voltage between Pin X on plug P1 and ground.
   c. Turn unit power on and check the multimeter. Within a few seconds the meter should indicate 24 v. If it does not, the control board is defective and must be replaced.
   d. Turn unit power off. Connect a fresh 1.5-v battery to terminals marked CLO2 as shown in Fig. 65.

⚠ CAUTION

The negative (−Ve) pole of the battery must be connected to the inner terminal, and the positive (±Ve) pole must be connected to the outer terminal as shown in Fig. 65.

   e. Turn unit power on. Make and break the connection between the outer CLO2 terminal and the positive (±Ve) pole of the battery.
   f. If the multimeter shows 24 v when the battery is disconnected and no voltage when the battery is connected, the CLO logic is good. If the multimeter shows no change, the CLO logic is defective and the board must be replaced. Remove all jumpers and replace all plugs except plug P1. (Replace plug P1 only if no further troubleshooting is required.)

Symptom: First or second stage of heating will not operate.

1. Turn unit power off. Disconnect plugs P1 and P3.
2. Check continuity between Pin W1 at plug P1 and Pin 5 at plug P3. If there is continuity, the board is good and the problem is either the connection at P3, or external to the control board. If there is no continuity, the control board is defective and must be replaced.
3. Check continuity between Pin W2 at plug P1 and Pin 7 at plug P3. If there is continuity, the board is good and the problem is either at the connection at plug P3 or external to the board. If there is not continuity, the board is defective and must be replaced. Reconnect plug P3 to the control board. (Reconnect plug P1 only if no further troubleshooting is required.)

Symptom: Evaporator fan will not energize on a call for heat.

1. Turn unit power off. Disconnect plug P1 and plug P4.
2. Install jumper wire between Pin R and Pin W1 at plug P1.
3. Turn unit power on. Check for continuity between Pin 6 and Pin 3 at plug P4 on control board.
4. If there is no continuity between these points, the board is defective and must be replaced.

   NOTE: The control board (part number HK37AA001) has no time delay.
5. If there is continuity between these points, the problem is at the connection at plug P4 or external to the control board.
6. Turn unit power off. Reconnect plugs P1 and P4.

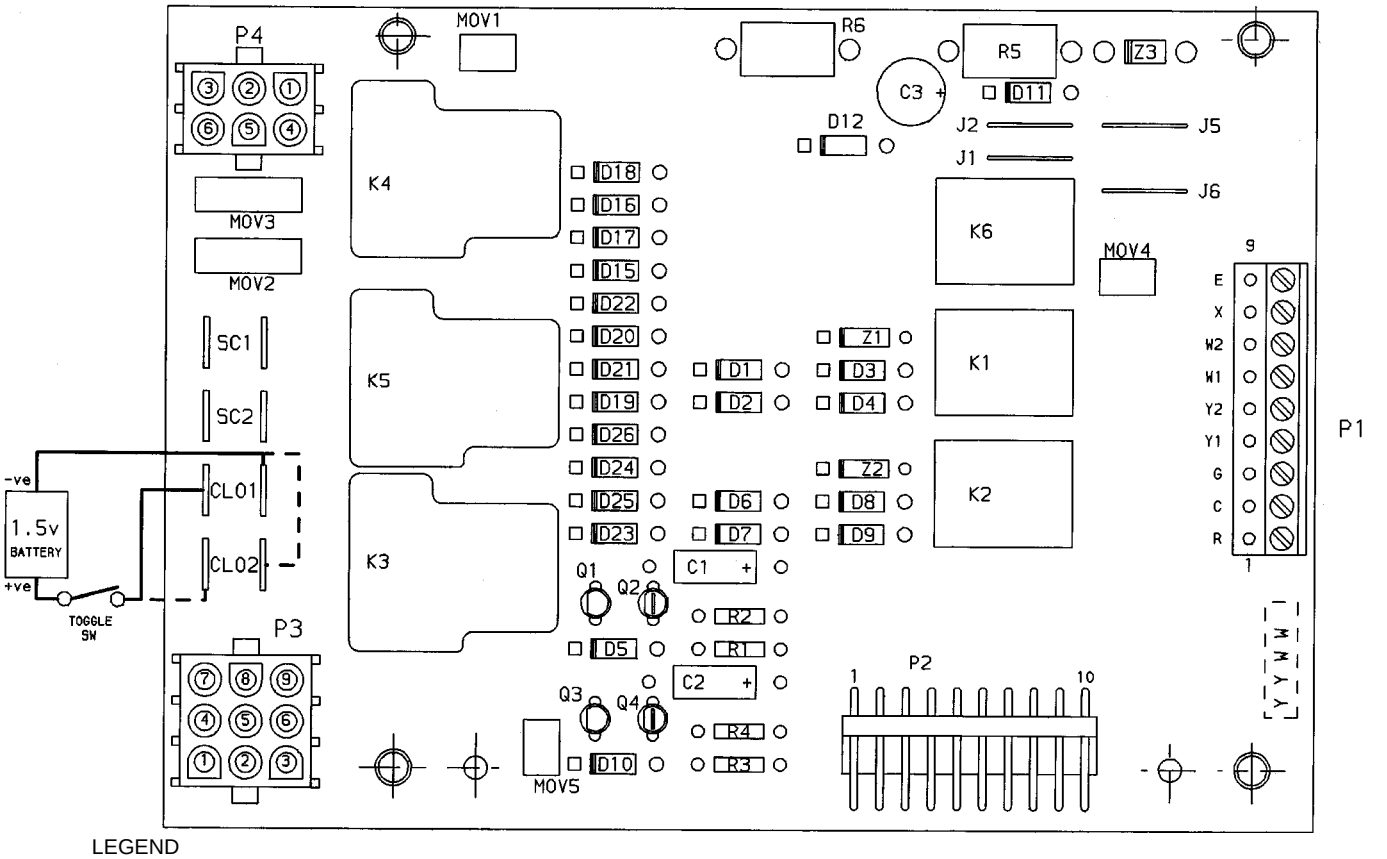

LEGEND

CLO — Compressor Lockout
P — Plug
SC — Safety Circuit

Fig. 65 — Compressor Lockout Connections

LEGEND FOR FIG. 66-73

ACC — Accessory
BP — Building Pressure
C — Contactor
CB — Circuit Breaker
CCB — Control Circuit Breaker
CF — Check Filter Switch
CLO — Compressor Lockout
COM — Common
COMM — Communication Plug
COMP — Compressor
COND — Condenser
CR — Control Relay
CS — Centrifugal Switch
CV — Constant Volume
DP — Duct Pressure
DPT — Discharge Pressure Transducer
DSIO — High-Voltage Relay Module
DU — Dummy
EC — Enthalpy Control
EQUIP — Equipment
FS — Fan Status Switch
FU — Fuse
GND — Ground
GR — Gas Relay
HHR — Hydronic Humidifier Relay
HIR — Heat Interlock Relay
HPS — High-Pressure Switch
HR — Heater Relay
HSIO — Keypad and Display Module
HV — High Voltage
HYD — Hydronic
I — Ignitor
ICP — Ignitor Control Pack
IDC — Induced Draft Contactor
IDM — Induced Draft Motor
IFC — Indoor (Evaporator) Fan Contactor
IFCB — Indoor (Evaporator) Fan Circuit Breaker
IFM — Indoor (Evaporator) Fan Motor
IGV — Inlet Guide Vanes
IGVM — Inlet Guide Vanes Motor
LPS — Low-Pressure Switch
LS — Limit Switch
LSR — Limit Switch Relay
MG — Main Gas
MGV — Main Gas Valve
MM — Head Control Pressure Device
MPER — Modulating Power Exhaust Relay
MV — Main Valve
NC — Normally Closed
NO — Normally Open
OFM — Outdoor (Condenser) Fan Motor
PCB — Power Exhaust Circuit Breaker
PEC — Power Exhaust Contactor
PEDM — Power Exhaust Damper Motor
PEM — Power Exhaust Motor
PG — Pilot Gas
PGV — Pilot Gas Valve
PIC — Processor-Integrated Controls
P, PL — Plug
PS — Power Supply (5 VDC)
PSIO — Processor Module
PV — Pilot Valve
PWR — Power
RES — Resistor
RFC — Return Fan Contactor
RFDM — Return Fan Damper Motor
RS — Rollout Switch
SEN,SN — Sensor
SPT — Suction Pressure Transducer
SW — Switch
TB — Terminal Block
TDO — Timed Discrete Output
TH — Thermostat
TRAN — Transformer
VLV — Valve
– – – – Field Wiring
——— Factory Wiring

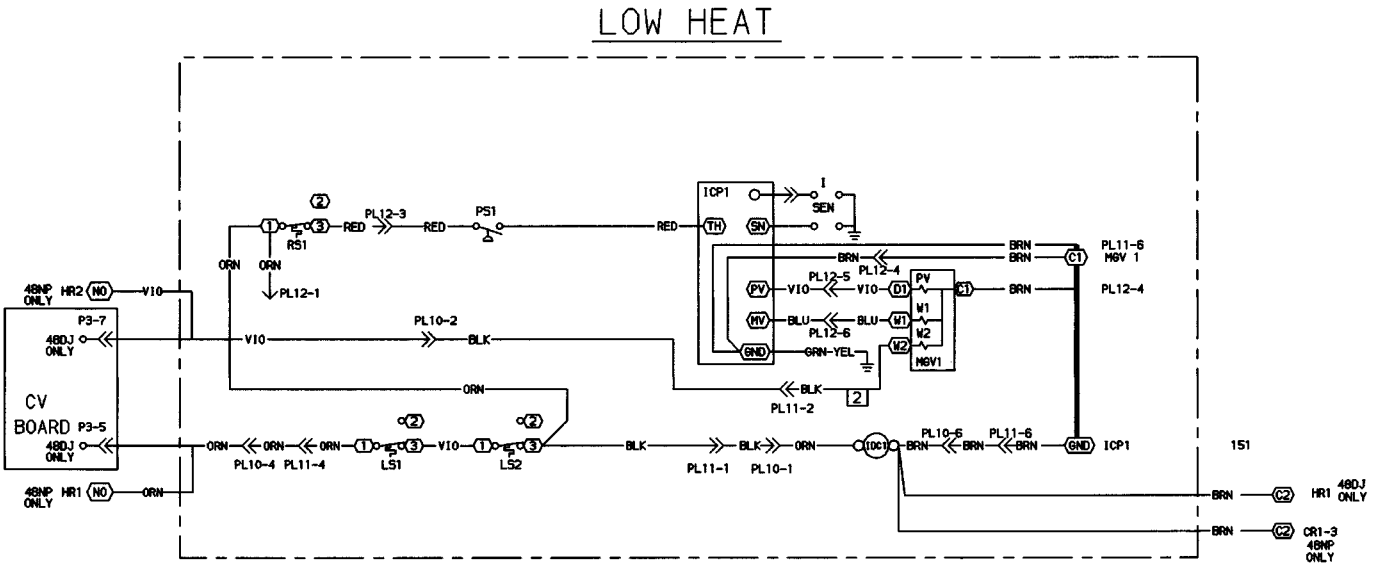

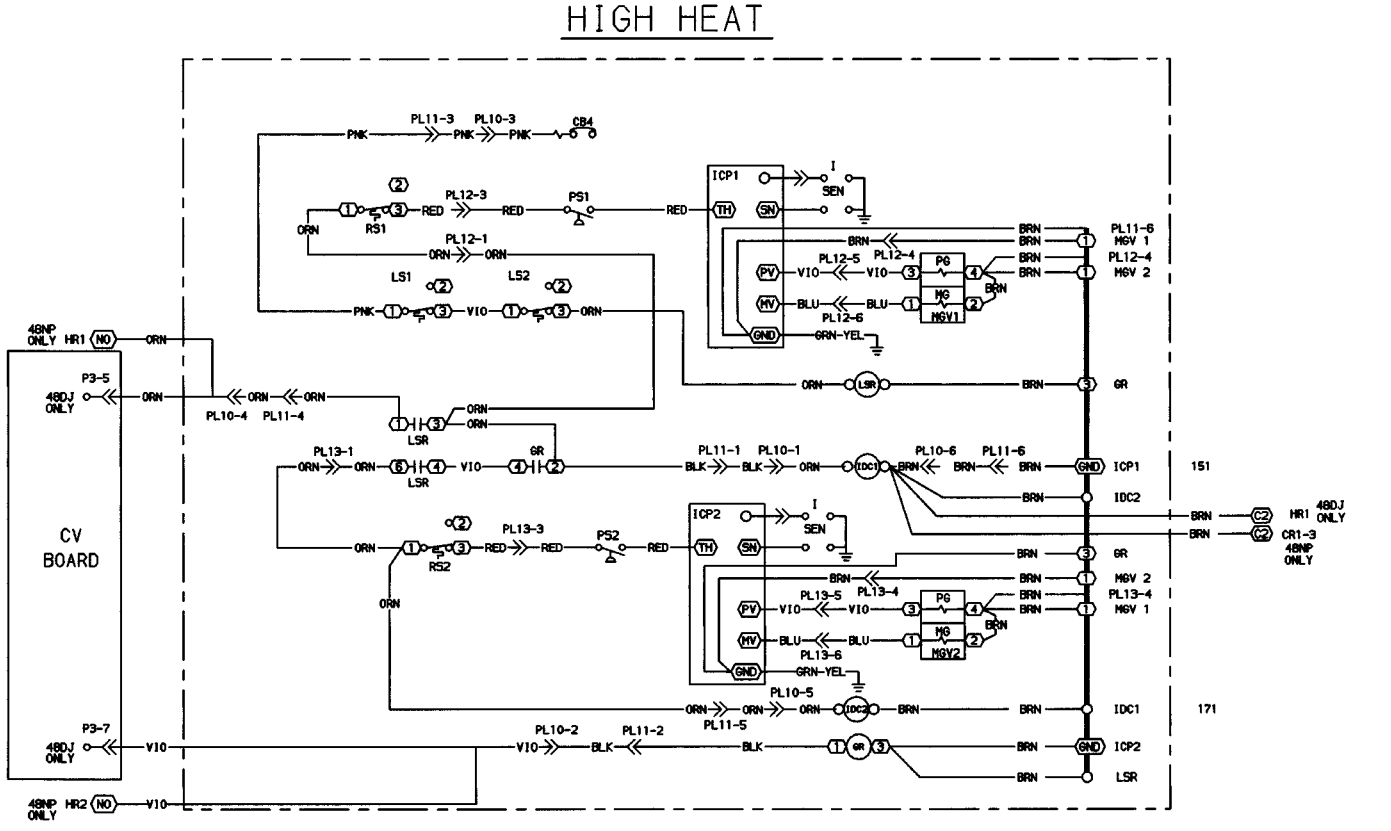

Fig. 66 — Gas Heat Sections; 48DJ,NP034,044 Units

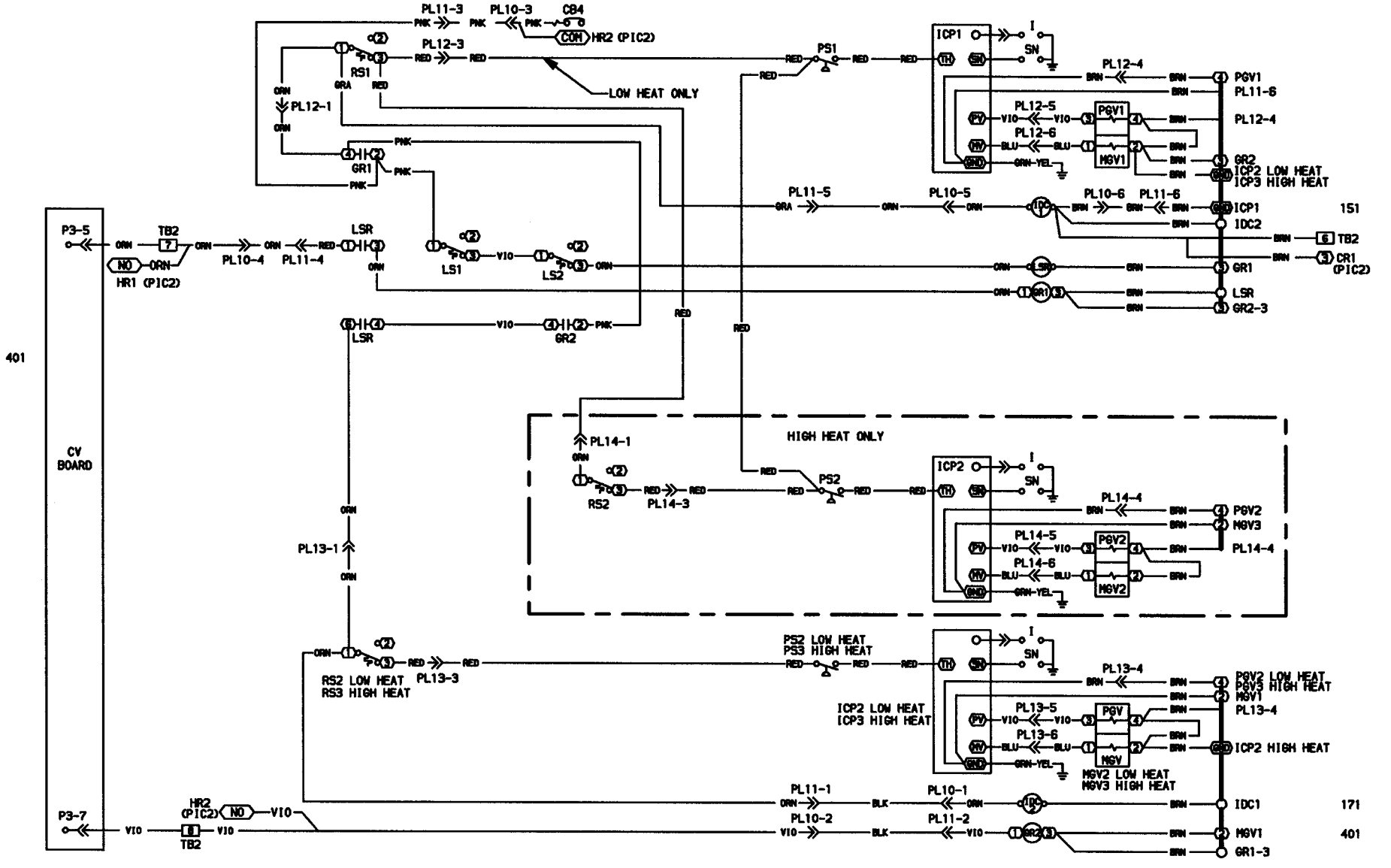

Fig. 67 — Gas Heat Sections; 48DJ,NP054-074 Units

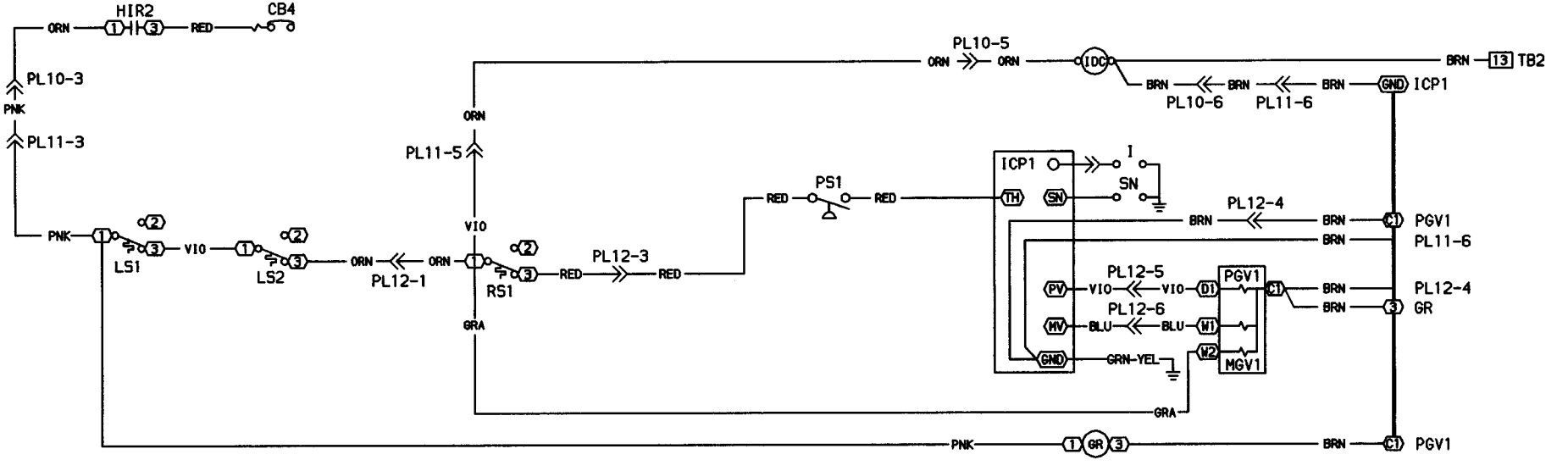

Fig. 68 — Gas Heat Section; 48DK034,044 Units

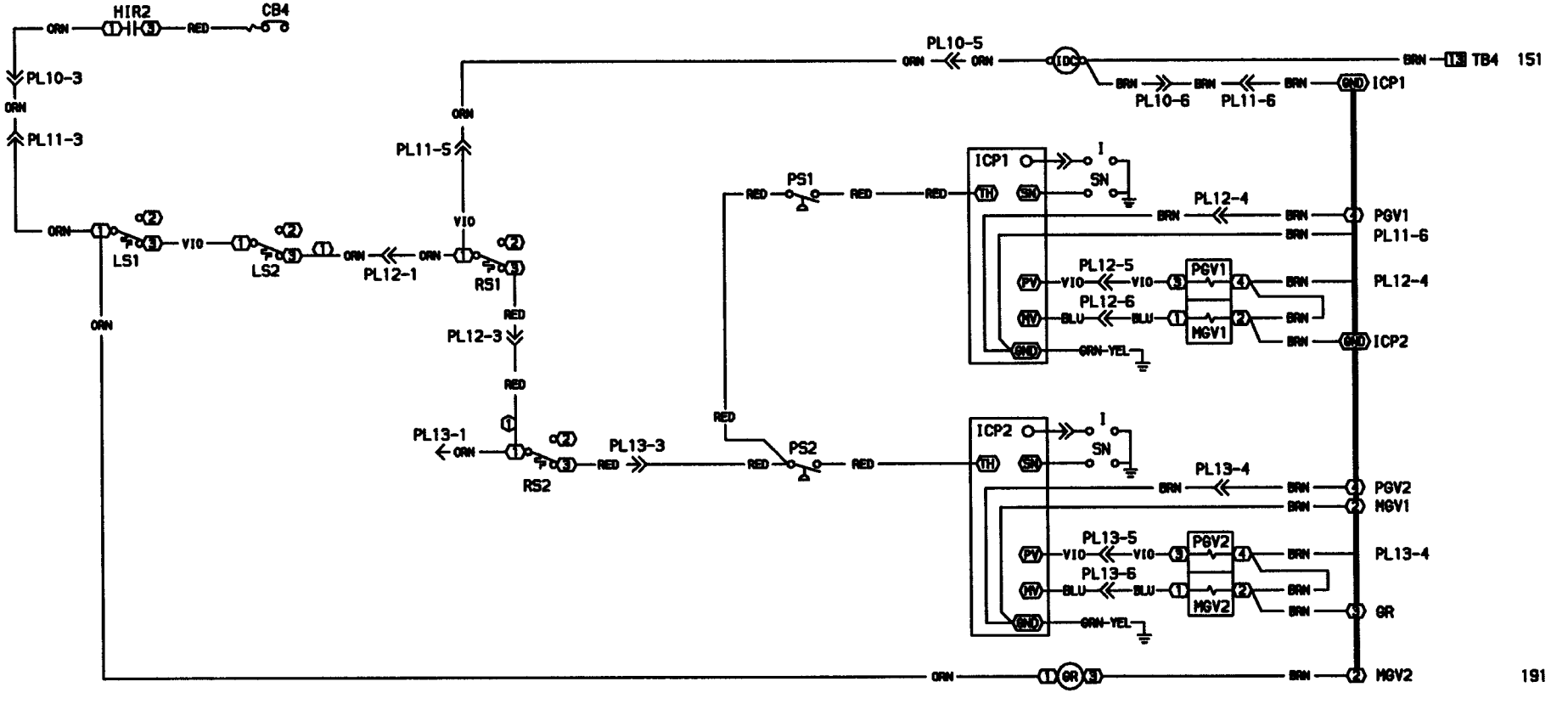

Fig. 69 — Gas Heat Section; 48DK054-074 Units

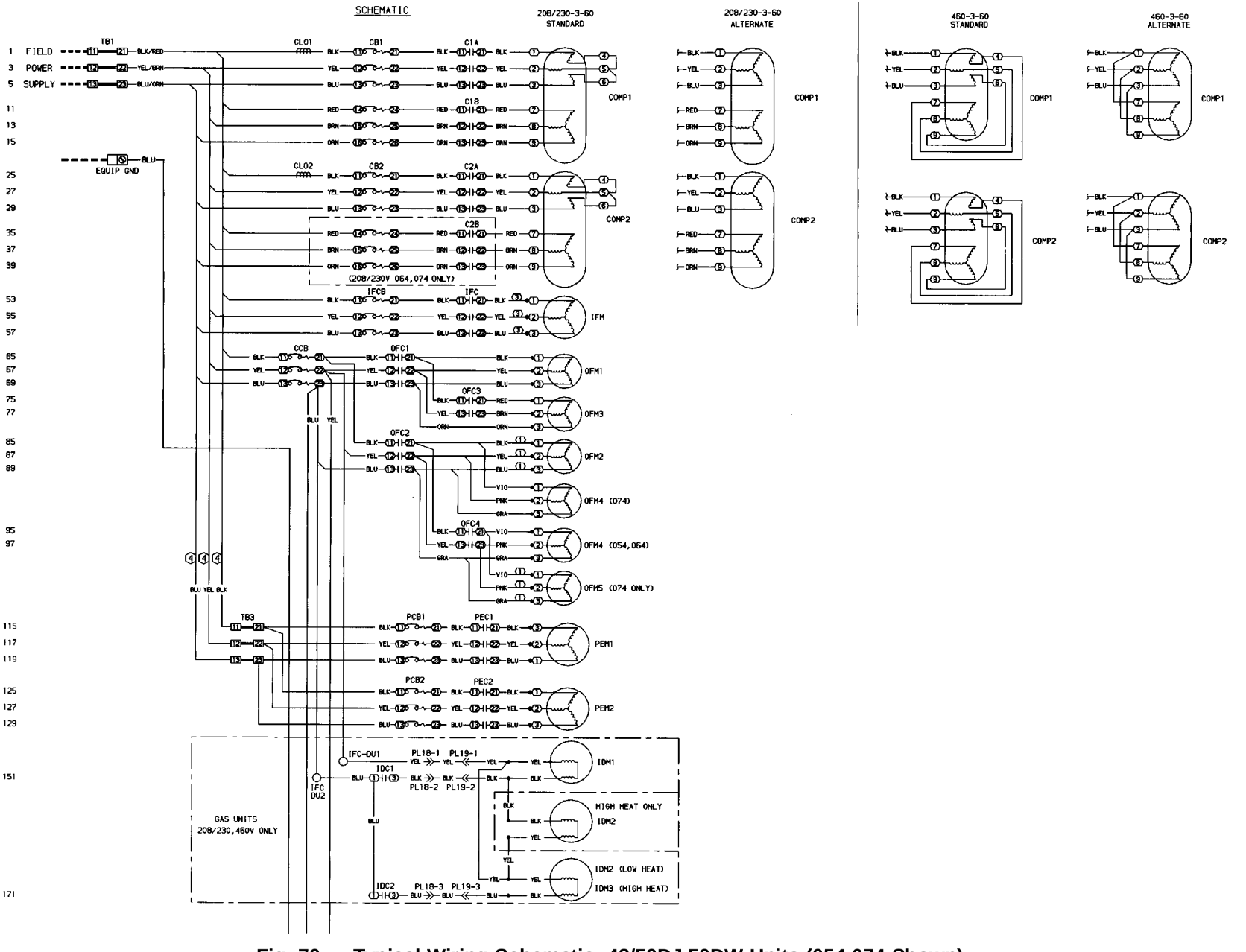

Fig. 70 — Typical Wiring Schematic; 48/50DJ,50DW Units (054-074 Shown)

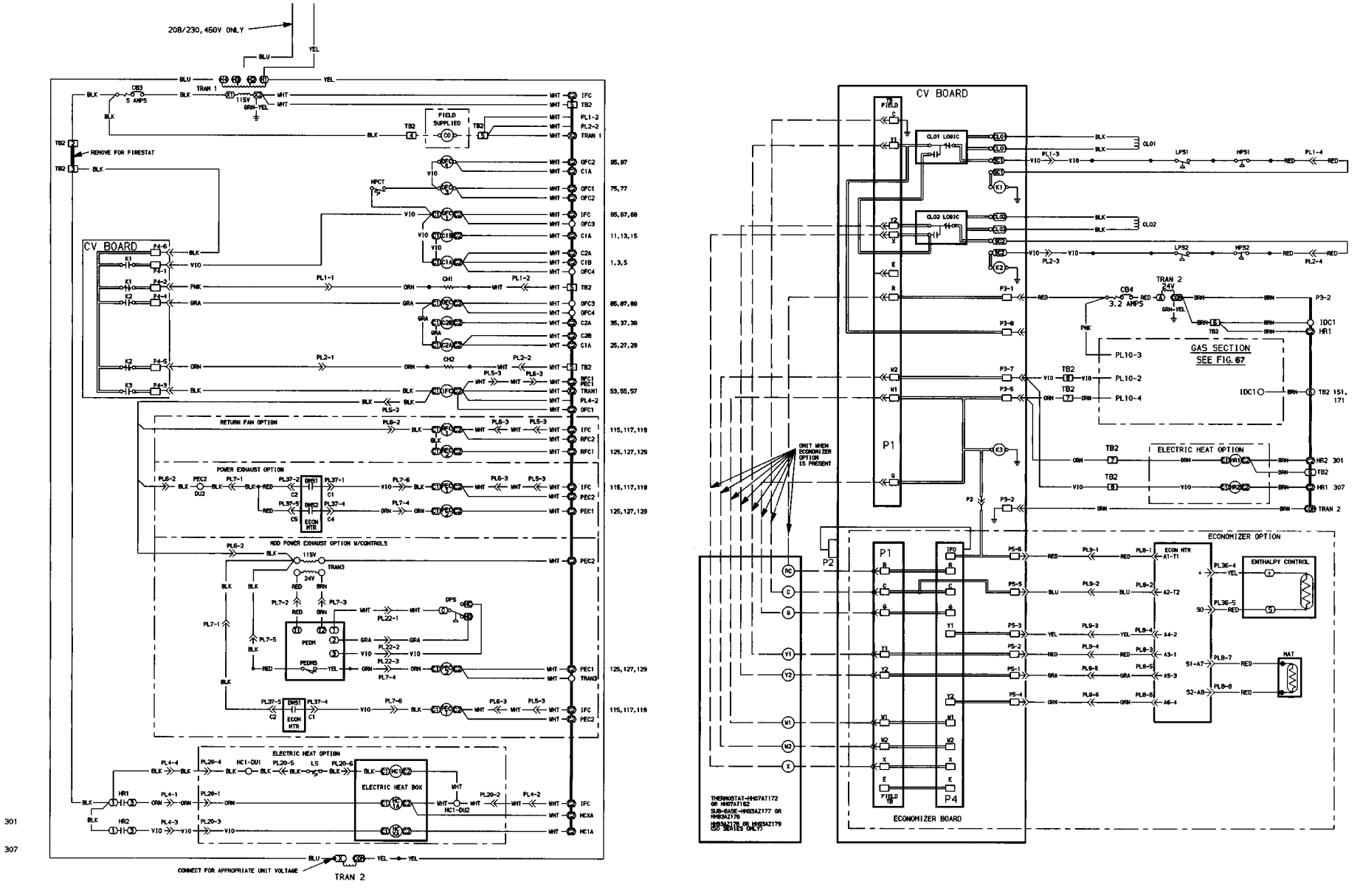

Fig. 70 — Typical Wiring Schematic; 48/50DJ,50DW Units (054-074 Shown) (cont)

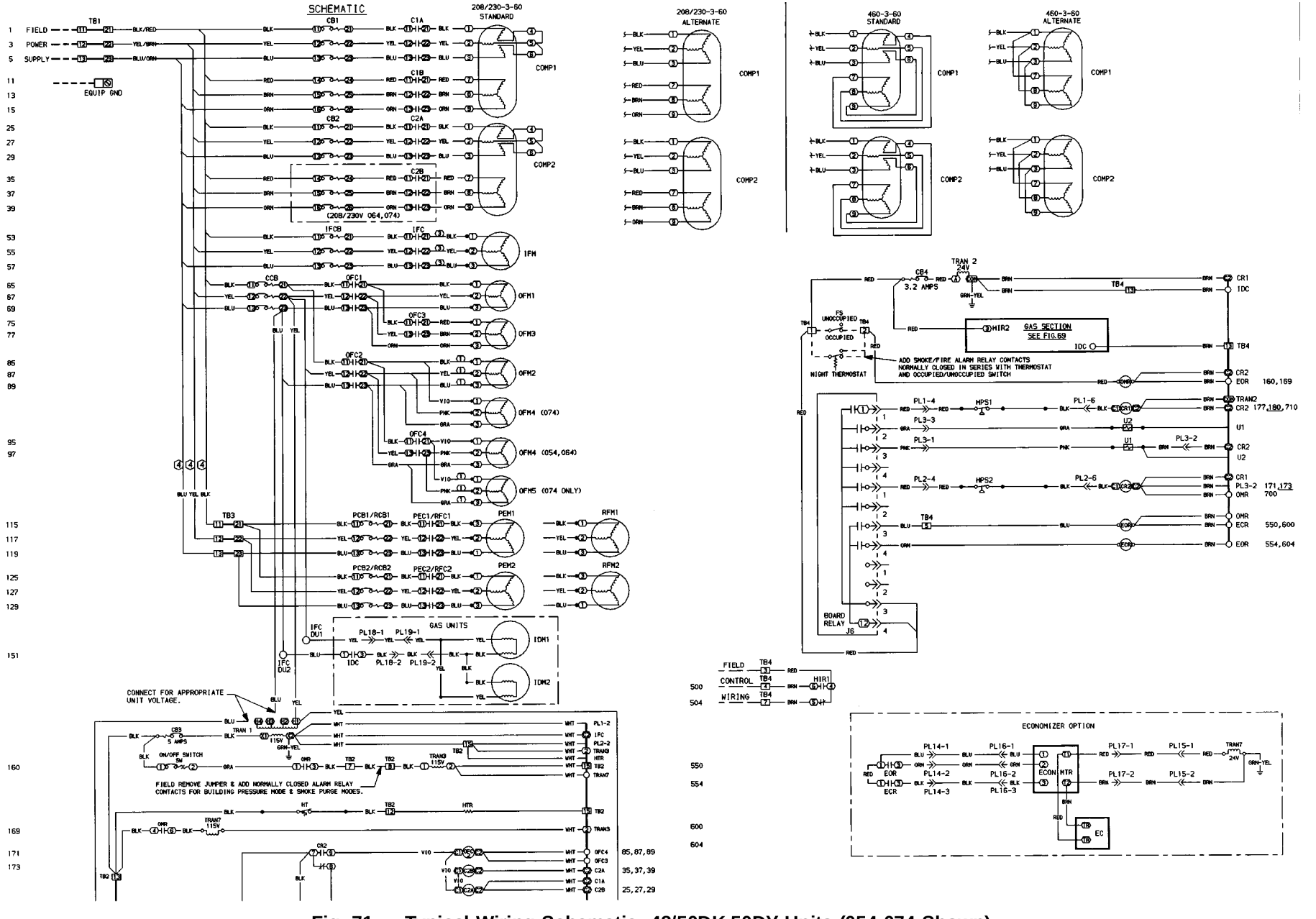

Fig. 71 — Typical Wiring Schematic; 48/50DK,50DY Units (054-074 Shown)

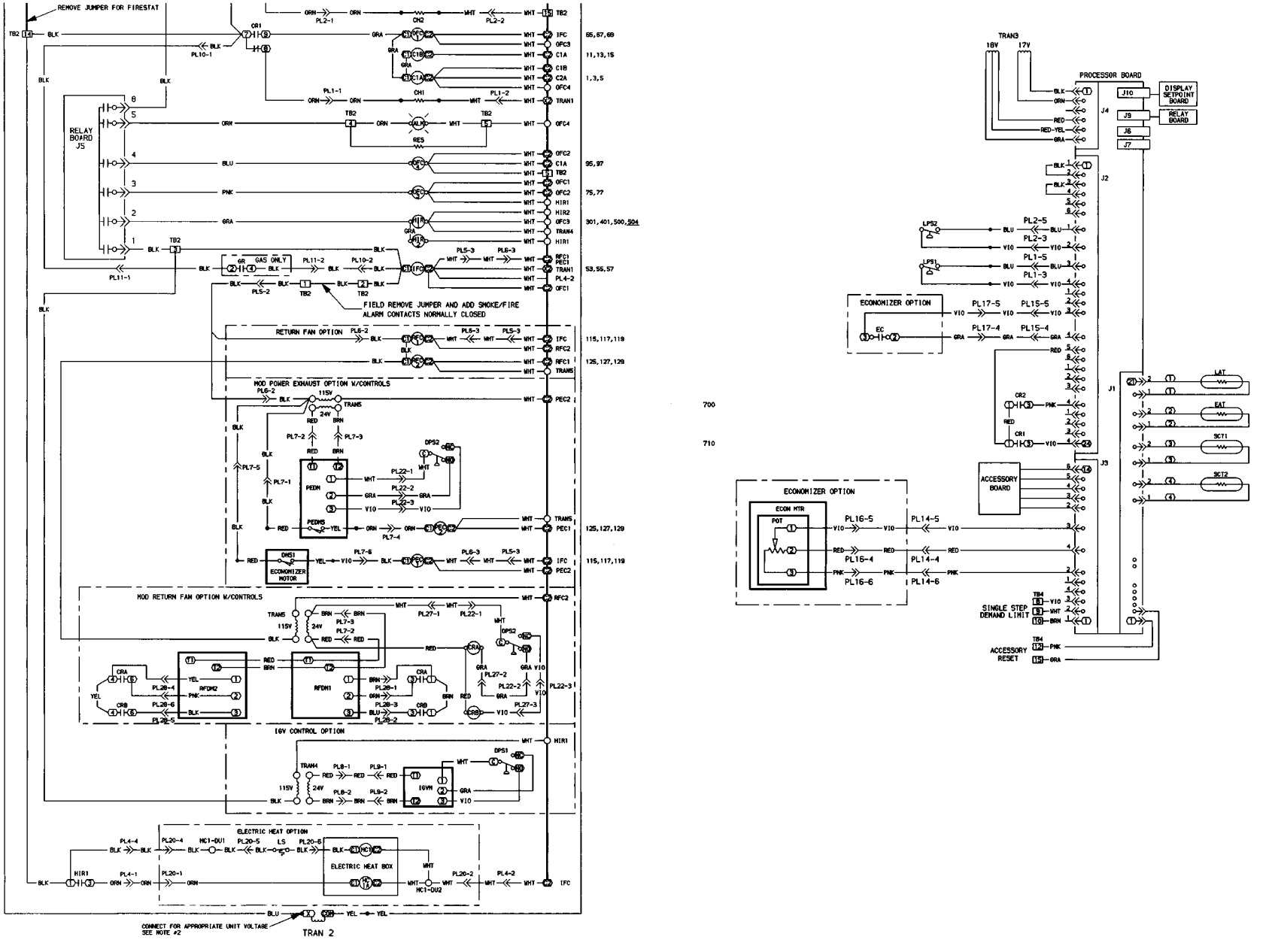

Fig. 71 — Typical Wiring Schematic; 48/50DK,50DY Units (054-074 Shown) (cont)

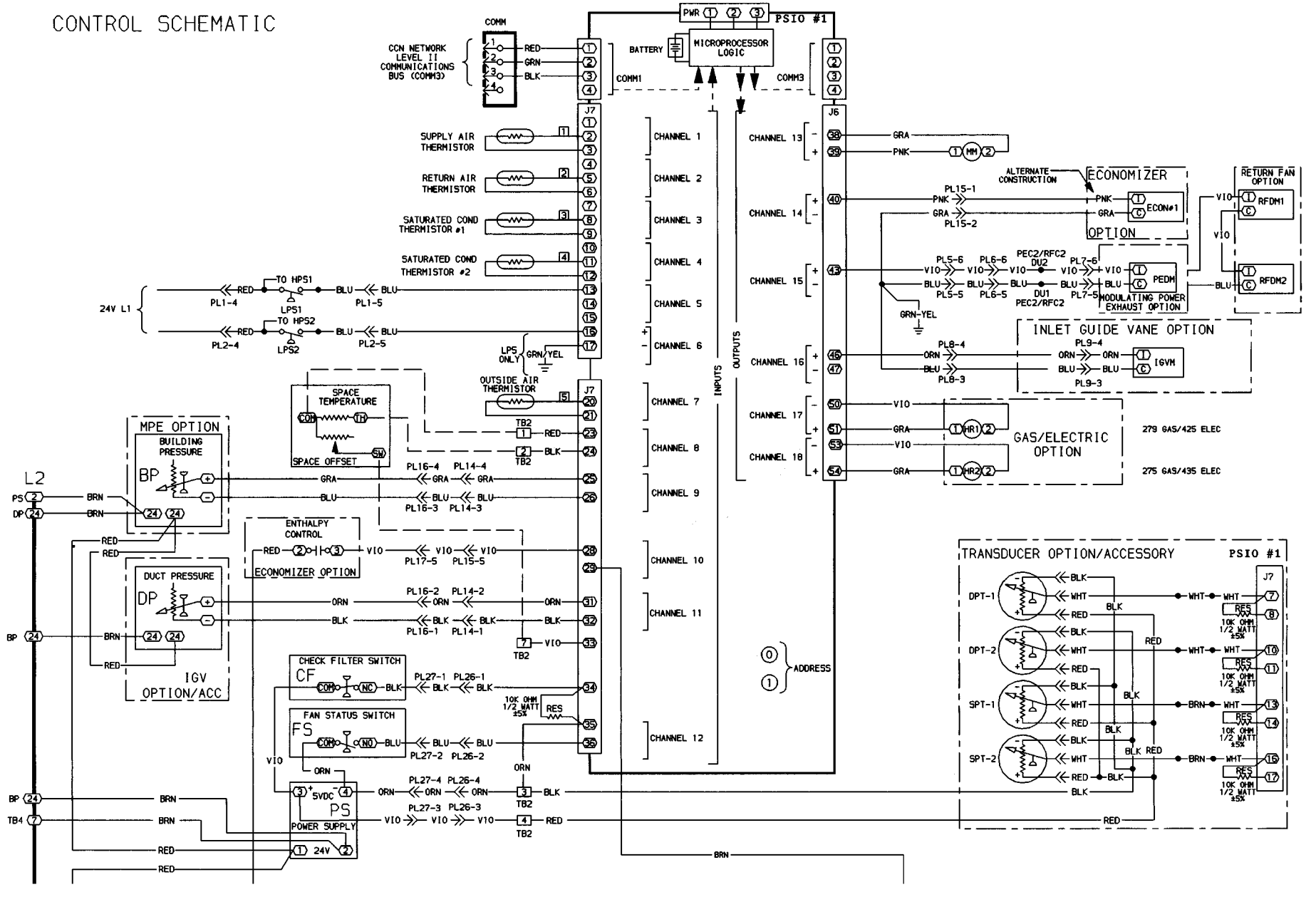

Fig. 72 — Typical Control Wiring Schematic; 48/50NP,50NB Units (054-074 Shown)

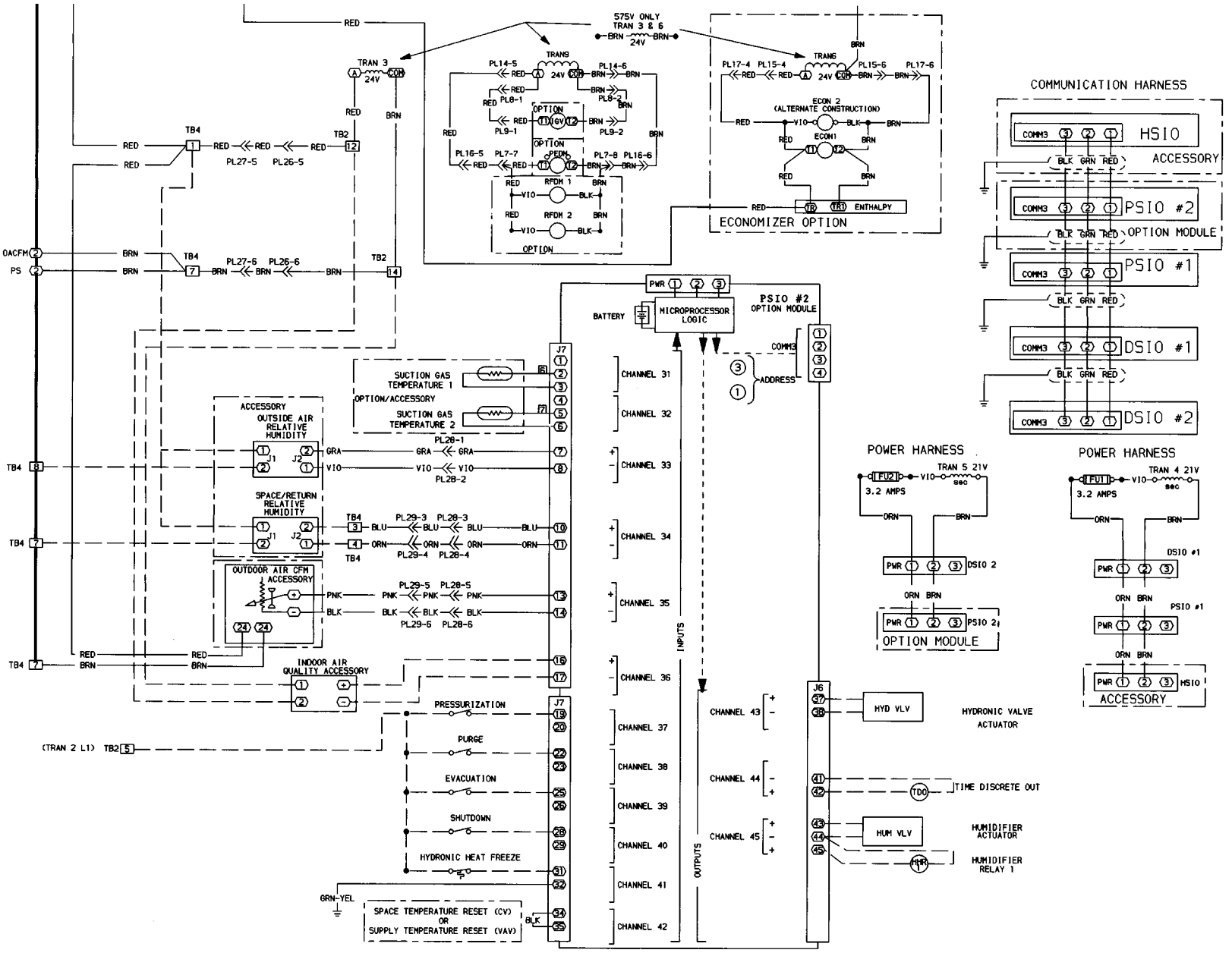

Fig. 72 — Typical Control Wiring Schematic; 48/50NP,50NB Units (054-074 Shown) (cont)

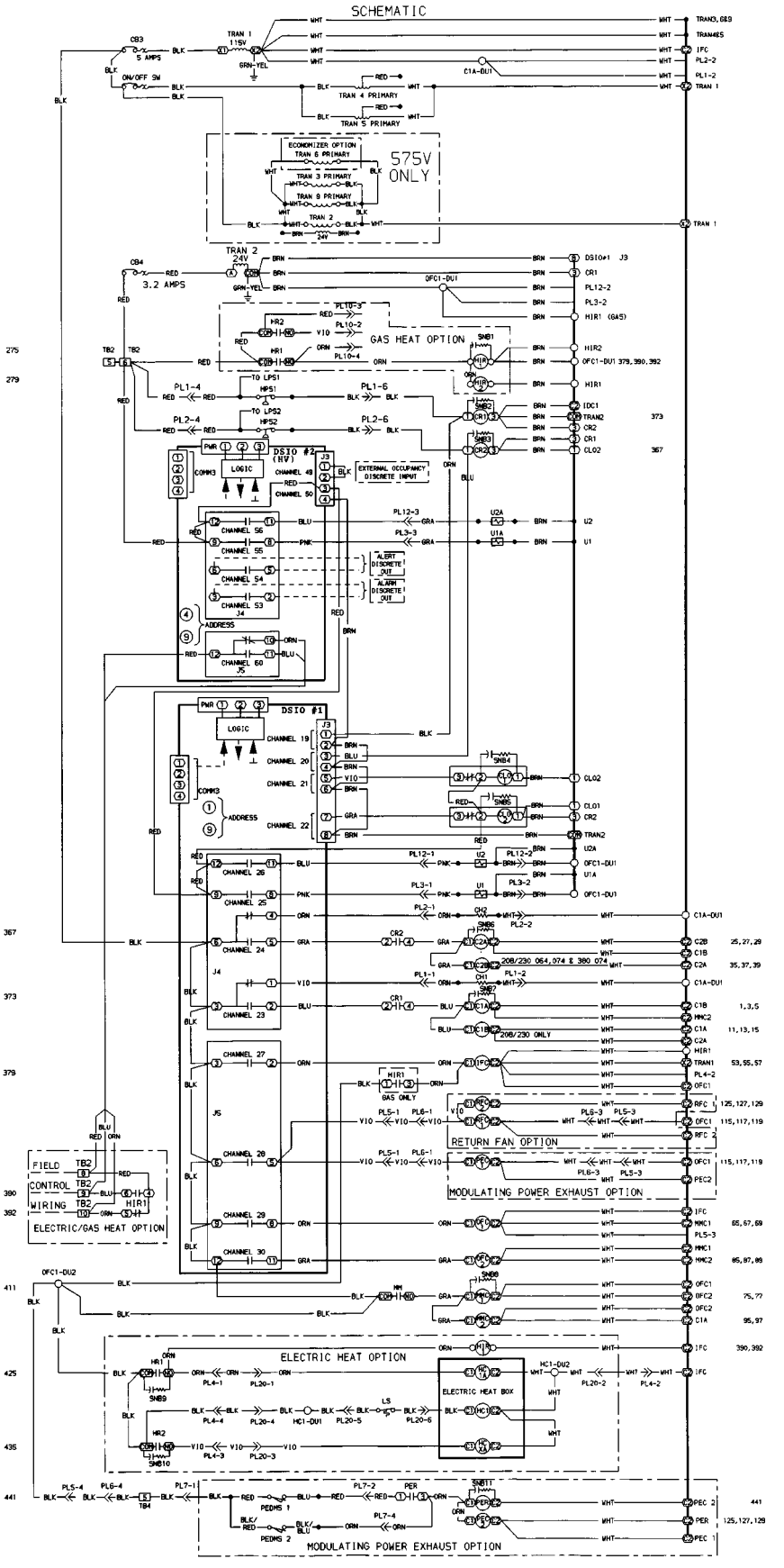

Fig. 72 — Typical Control Wiring Schematic; 48/50NP,50NB Units (054-074 Shown) (cont)

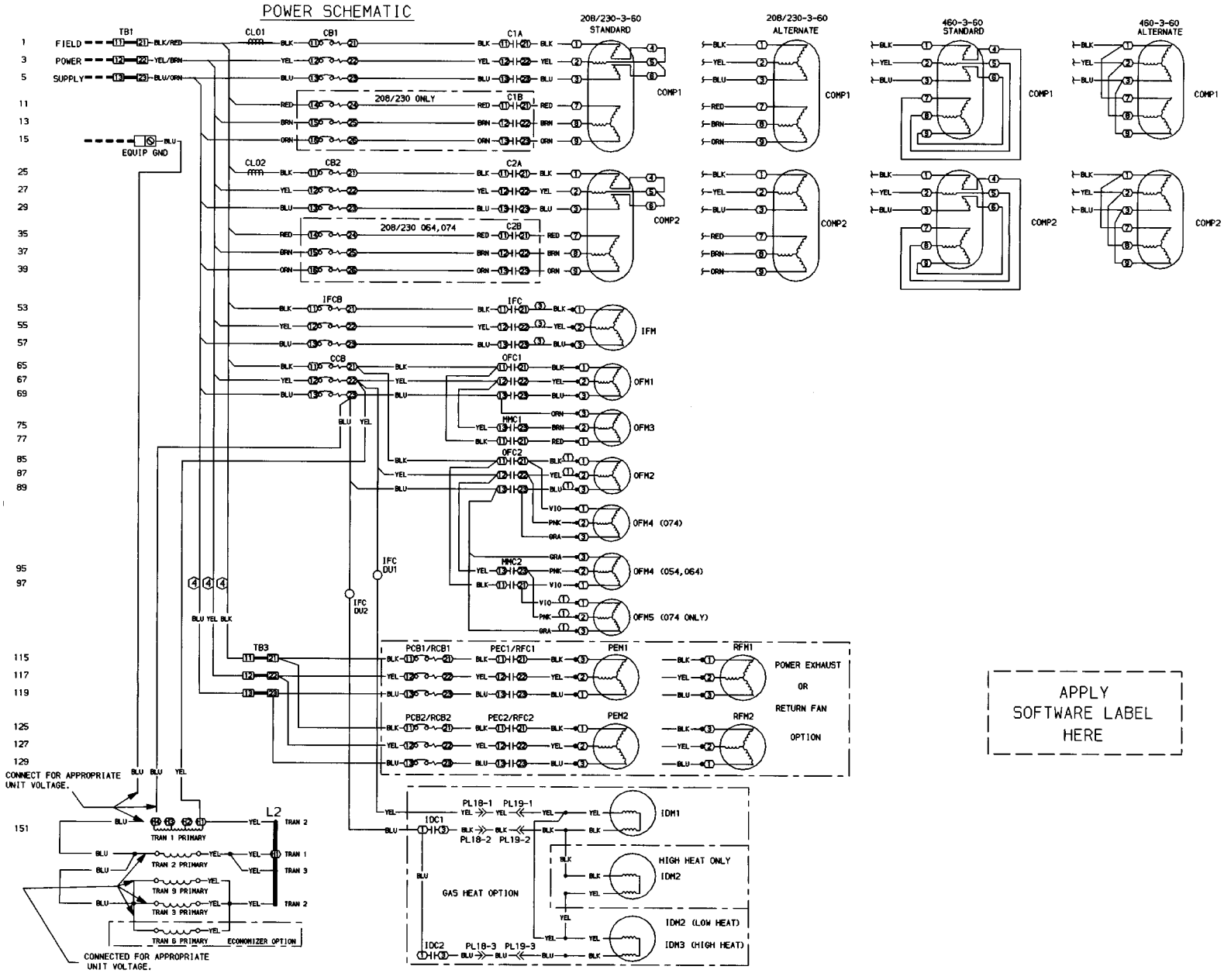

Fig. 73 — Typical Power Wiring Schematic; 48/50NP,50NB Units (054-074, 208/230 and 460 v Shown)

PACKAGED SERVICE TRAINING

Our packaged service training programs provide an excellent way to increase your knowledge of the equipment discussed in this manual. Product programs cover:

- Unit Familiarization
- Installation Overview
- Maintenance
- Operating Sequence

A large selection of product, theory, and skills programs is available. All programs include a video cassette and/or slides and a companion booklet. Use these for self teaching or to conduct full training sessions.

For a free Service Training Material Catalog (STM), call 1-800-962-9212. Ordering instructions are included (U.S.A. and Canada only).

Copyright 1996 Carrier Corporation

START-UP CHECKLIST

MODEL NO.: _____ SERIAL NO.: _____

DATE: _____ TECHNICIAN: _____

PRE-START-UP:

- ☐ VERIFY THAT ALL PACKING MATERIALS HAVE BEEN REMOVED FROM UNIT
- ☐ LOOSEN ALL SHIPPING HOLDDOWN BOLTS AND REMOVE SHIPPING BRACKETS PER INSTRUCTIONS
- ☐ VERIFY INSTALLATION OF ECONOMIZER HOOD
- ☐ VERIFY INSTALLATION OF EXHAUST HOOD
- ☐ VERIFY THAT CONDENSATE CONNECTION IS INSTALLED PER INSTRUCTIONS
- ☐ VERIFY THAT ALL ELECTRICAL CONNECTIONS AND TERMINALS ARE TIGHT
- ☐ CHECK GAS PIPING FOR LEAKS (48 SERIES UNITS ONLY)
- ☐ CHECK THAT INDOOR-AIR FILTER IS CLEAN AND IN PLACE
- ☐ VERIFY THAT UNIT IS LEVEL
- ☐ CHECK FAN WHEEL AND PROPELLER FOR LOCATION IN HOUSING/ORIFICE, AND VERIFY SET SCREW IS TIGHT
- ☐ VERIFY THAT FAN SHEAVES ARE ALIGNED AND BELTS ARE PROPERLY TENSIONED

START-UP

ELECTRICAL

SUPPLY VOLTAGE L1-L2 _____ L2-L3 _____ L3-L1 _____

COMPRESSOR AMPS — COMPRESSOR NO. 1 L1 _____ L2 _____ L3 _____

— COMPRESSOR NO. 2 L1 _____ L2 _____ L3 _____

SUPPLY FAN AMPS _____ EXHAUST FAN AMPS _____

ELECTRIC HEAT AMPS L1 _____ L2 _____ L3 _____

TEMPERATURES

OUTDOOR-AIR TEMPERATURE _____ F DB (Dry-Bulb)

RETURN-AIR TEMPERATURE _____ F DB _____ F WB (Wet-Bulb)

COOLING SUPPLY AIR _____ F

GAS HEAT SUPPLY AIR (48 SERIES UNITS ONLY) _____ F

ELECTRIC HEAT SUPPLY AIR (IF UNIT IS SO EQUIPPED) _____ F

PRESSURES

GAS INLET PRESSURE (48 SERIES UNITS ONLY) _____ IN. WG

GAS MANIFOLD PRESSURE (48 SERIES UNIT ONLY) VALVE NO. 1 _____ IN. WG VALVE NO. 2 _____ IN. WG

REFRIGERANT SUCTION CIRCUIT NO. 1 _____ PSIG CIRCUIT NO. 2 _____ PSIG

REFRIGERANT DISCHARGE CIRCUIT NO. 1 _____ PSIG CIRCUIT NO. 2 _____ PSIG

- ☐ VERIFY REFRIGERANT CHARGE USING CHARGING CHARTS ON PAGES 47-49

GENERAL

- ☐ ECONOMIZER MINIMUM VENT AND CHANGEOVER SETTINGS TO JOB REQUIREMENTS

CUT ALONG DOTTED LINE

Copyright 1996 Carrier Corporation

Manufacturer reserves the right to discontinue, or change at any time, specifications or designs without notice and without incurring obligations.