Omnizone™
50BV034-064
Water-Cooled
Indoor Self-Contained Systems

Installation, Start-Up, Service and Controls Operation and Troubleshooting

CONTENTS

Page

SAFETY CONSIDERATIONS 1
GENERAL 3
PRE-INSTALLATION 3
Inspection 3
- UNIT STORAGE

INSTALLATION 3
Step 1 — Check Jobsite 3
Step 2 — Check Unit 4
Step 3 — Locate Unit 4
- MINIMUM REQUIRED AREA FOR UNIT INSTALLATION
- ACOUSTICAL CONSIDERATIONS
- UNIT PLACEMENT AND RIGGING
- MODULAR UNITS (50BVT,V,W)
- LOW BOY UNITS
- HIGH BOY UNITS
- REMOVE PACKAGING
- ASSEMBLING MODULAR UNITS
- PROTECTION

Step 4 — Check Duct System 20
- DUCT STATIC PRESSURE PROBE AND TUBING (VAV ONLY)
- DUCT HIGH-STATIC (DHS) LIMIT SWITCH (VAV ONLY)

Step 5 — Make Piping Connections 21
- CONDENSER WATER PIPING
- WATER QUALITY GUIDELINES
- EVAPORATOR CONDENSATE DRAIN
- HOT WATER HEATING COIL (OPTIONAL)
- WATERSIDE ECONOMIZER (OPTIONAL)

Step 6 — Complete Electrical Connections 25
- POWER WIRING
- CONTROL TRANSFORMER
- CONTROL WIRING (CV ONLY)
- HOT GAS REHEAT CONTROL (OPTIONAL)
- ENERGY MANAGEMENT SWITCH (OPTIONAL)
- ALARM OUTPUT (ALL UNITS)
- CONTROL WIRING (VAV ONLY)

Step 7 — Configure Unit Control Components . . . 42
- UNIT PROTECTION MODULE
- UPM STANDARD SAFETIES AND ALARMS
- WATERSIDE ECONOMIZER (CV UNITS)
- VARIABLE FREQUENCY DRIVE PARAMETERS (VAV UNITS)

START-UP 47
General 47
- CRANKCASE HEATERS
- CONFIRM THE INPUT POWER PHASE SEQUENCE
- INTERNAL WIRING
- RETURN-AIR FILTERS
- COMPRESSOR MOUNTING
- REFRIGERANT SERVICE PORTS
- WATER PIPING

CV Unit Start-Up 48
- EVAPORATOR FAN
- COOLING

Sequence of Operation, CV Units — 50BVT,V 48
- WATER ECONOMIZER COOLING
- HOT GAS REHEAT (OPTIONAL)
- Y CALL (COOLING OR HEATING)
- REFRIGERANT LEAK DETECTION SYSTEM

Sequence of operation for units with SCU Open Controller (VAV Units ONLY) 50
SERVICE 50
Compressor Rotation 50
Fan Motor Replacement 50
- CHECK/CHANGE VFD OUTPUT CURRENT LIMIT

MAINTENANCE 50
Cleaning Unit Exterior 50
Coil Cleaning 50
Inspection 50
Air Filters 50
Condensate Drains 50
Water-Cooled Condensers 50
- GRAVITY FLOW METHOD
- FORCED CIRCULATION METHOD

Fan Motor Lubrication 51
Fan Bearing Lubrication 51
Fan Sheaves 51
- ALIGNMENT

Evaporator Fan Performance Adjustment 52
- BELT TENSION ADJUSTMENT

TROUBLESHOOTING 53
Unit Protection Module (UPM) 53
START-UP CHECKLIST 55

SAFETY CONSIDERATIONS

Installation and servicing of air-conditioning equipment can be hazardous due to system pressure and electrical components. Only trained and qualified service personnel should install, repair, or service air-conditioning equipment.

Untrained personnel can perform basic maintenance functions of cleaning coils and filters and replacing filters. All other operations should be performed by trained service personnel. When working on air-conditioning equipment, observe precautions in the literature, tags and labels attached to the unit, and other safety precautions that may apply.

Manufacturer reserves the right to discontinue, or change at any time, specifications or designs without notice and without incurring obligations.

Catalog No. 04- 53500415-01 Printed in U.S.A. Form No. 50BV-9SI

Follow all safety codes, including ANSI (American National Standards Institute) Z223.1. Wear safety glasses and work gloves. Use quenching cloth for unbrazing operations. Have fire extinguisher available for all brazing operations.

It is important to recognize safety information. This is the safety-alert symbol ⚠. When you see this symbol on the unit and in instructions or manuals, be alert to the potential for personal injury.

Understand the signal words DANGER, WARNING, CAUTION, and NOTE. These words are used with the safety-alert symbol. DANGER identifies the most serious hazards which **will** result in severe personal injury or death. WARNING signifies hazards which **could** result in personal injury or death. CAUTION is used to identify unsafe practices, which **may** result in minor personal injury or product and property damage. NOTE is used to highlight suggestions which **will** result in enhanced installation, reliability, or operation.

Refrigerant Safety Group A2L

IMPORTANT: The installation of water source heat pump units and all associated components, parts, and accessories which make up the installation shall be in accordance with the regulations of ALL authorities having jurisdiction and MUST conform to all applicable codes. It is the responsibility of the installing contractor to determine and comply with ALL applicable codes and regulations.

Improper installation, adjustment, alteration, service, maintenance, or use can cause explosion, fire, electrical shock or other conditions which may cause personal injury or property damage. Consult a qualified installer, service agency, or your distributor or branch for information or assistance with the equipment.

The qualified installer or service provider must use factory-authorized kits, parts, or accessories when servicing or repairing this product. Refer to the individual instructions packaged with the kits or accessories when installing.

⚠ WARNING

RISK OF FIRE Flammable Refrigerant Used — Dispose of properly in accordance with federal or local regulations.

⚠ WARNING

RISK OF FIRE Flammable Refrigerant Used — To be repaired only by trained service personnel. DO NOT puncture refrigerant tubing.

⚠ WARNING

The appliance shall be stored in a room without continuously operating ignition sources (for example: open flames, an operating gas appliance or an operating electric heater).

⚠ WARNING

Do not pierce or burn refrigerant lines. Be aware that the refrigerants may not contain an odor.

⚠ WARNING

Auxiliary devices which may be a POTENTIAL IGNITION SOURCE shall not be installed in the duct work. Examples of such POTENTIAL IGNITION SOURCES are hot surfaces with a temperature exceeding 700°C and electric switching devices.

⚠ WARNING

Do not use means to accelerate the defrosting process or to clean, unless recommended in these instructions.

⚠ WARNING

Before performing service or maintenance operations on unit, turn off main power switch to unit and open all disconnects. More than one disconnect switch may be required to de-energize this equipment. Electric shock hazard can cause injury or death.

⚠ CAUTION

Use care in handling, rigging, and setting bulky equipment.

⚠ WARNING

DO NOT USE TORCH to remove any component. System contains oil and refrigerant under pressure.

To remove a component, wear protective gloves and goggles and proceed as follows:

a. Shut off electrical power to unit.
b. Recover refrigerant to relieve all pressure from system using both high-pressure and low pressure ports.
c. Traces of vapor should be displaced with nitrogen and the work area should be well ventilated. Refrigerant in contact with an open flame produces toxic gases.
d. Cut component connection tubing with tubing cutter and remove component from unit. Use a pan to catch any oil that may come out of the lines and as a gauge for how much oil to add to the system.
e. Carefully un-sweat remaining tubing stubs when necessary. Oil can ignite when exposed to torch flame.

Failure to follow these procedures may result in personal injury or death.

⚠ CAUTION

DO NOT re-use compressor oil or any oil that has been exposed to the atmosphere. Dispose of oil per local codes and regulations. DO NOT leave refrigerant system open to air any longer than the actual time required to service the equipment. Seal circuits being serviced and charge with dry nitrogen to prevent oil contamination when timely repairs cannot be completed. Failure to follow these procedures may result in damage to equipment.

GENERAL

Omnizone™ 50BV Indoor Packaged units are very flexible for a variety of applications. These self-contained units are available as water source cooling only and heat pump units. The 50BV units are available with either constant volume (CV) or variable air volume (VAV) controls. Omnizone™ 50BV units are available in two cabinet styles - low boy and high boy, refer to the dimensional drawings. All 50BV units are modular units, and can be taken apart for easier installation. Modular units are built using an unpainted, galvanized steel cabinet with steel framework, and can be easily disassembled without breaking the refrigerant lines. See Table 1 for a model number reference by application.

Each unit contains multiple scroll compressors piped in separate refrigerant circuits. Each water-cooled circuit includes a coaxial (tube-in-tube) condenser, TXV (thermostatic expansion valve), individual evaporator coils, and all interconnecting piping. Water source units are shipped fully charged with Puron® Advance (R-454B) refrigerant.

Each unit is equipped with one or two forward-curved centrifugal blowers, to ensure quiet air delivery to the conditioned space. Modular units include inverter duty motor(s) and fixed sheaves. For VAV applications, the unit is supplied with an inverter duty motor with variable frequency drive(s) (VFD) that automatically adjusts blower speed to maintain a constant, adjustable duct static pressure.

Constant volume units can be controlled by a field provided two-stage cooling only (50BVT) or two-stage heat pump (50BVV) thermostat or field provided digital controller.

VAV units include a factory-installed digital VAV controller that provides compressor staging (two or four stages) based on return air temperature and supply air temperature set points for multi-zone VAV operation.

All 50BV units have removable access panels for easy servicing. These panels allow access to controls, compressors, condensers, VFD(s) (if applicable), evaporator motors, blowers, belts, pulleys, and refrigeration components.

Table 1 — Model Number Reference By Application Type

MODEL	TYPE[a]	AVAILABLE CAPACITY	CONSTRUCTION	CONTROLS
50BVT	Water-Cooled	30 to 60 nominal tons	Modular	CV
50BVV	Water-Cooled Heat Pump	30 to 60 nominal tons	Modular	CV
50BVW	Water-Cooled	30 to 60 nominal tons	Modular	VAV

NOTE(S):

a. All units are cooling only unless specified.

LEGEND

CV — Constant Volume
VAV — Variable Air Volume

PRE-INSTALLATION

Omnizone™ 50BV units are intended for indoor installation only. Review unit dimensions, piping and wiring connections, service clearances, and other equipment details included in this installation guide, the product data, or the unit submittal prior to equipment installation.

Inspection

Upon receipt of shipment, carefully check the shipment against the bill of lading. Modular units ship as either one (30 ton low boy), two (30 ton high boy, 40-60 ton low boy), or four (40-60 ton high boy) separate pieces. Make sure all pieces have been received. Inspect the carton or crating of each unit, and inspect each unit for damage on both the interior and exterior. Ensure the shipping company makes proper notation of any shortages or damage on all copies of the freight bill. Concealed damage not discovered during unloading must be reported to the shipping company **within 5 days** of receipt of shipment.

NOTE: It is the responsibility of the purchaser to file all necessary claims with the shipping company.

UNIT STORAGE

The 50BV units are designed and packaged for indoor storage and use only. If the equipment is not needed for immediate installation upon its arrival at the job site, it should be left in its shipping carton and stored in a clean, dry area. Units should not be stored in a location that is subject to freezing. Units must only be stored or moved in the normal upright position, as indicated by the up arrows on each carton, at all times. DO NOT STACK UNITS.

INSTALLATION

Step 1 — Check Jobsite

Prior to proceeding with removal of existing equipment and/or installation of new equipment, verify the following:

1. Be sure that the location chosen for unit installation provides ambient temperatures maintained above freezing.
2. Be sure the installation location is isolated from sleeping areas, private offices and other acoustically sensitive spaces.
3. Be sure unit is mounted at a height sufficient to provide an adequate slope of the condensate lines. If an appropriate slope cannot be achieved, a field-supplied condensate pump may be required.
4. On horizontal units, allow adequate room below the unit for condensate drain trap and do not locate the unit above supply piping.
5. Provide sufficient space for duct connection. Do not allow the weight of the ductwork to rest on the unit.
6. Provide adequate clearance for filter replacement and drain pan cleaning. Do not allow piping, conduit, etc. to block filter access.
7. Provide sufficient access to allow maintenance and servicing of the blower and blower motor, compressor, refrigerant circuit, controls, and coils.
8. For units with free return (non-ducted), provide adequate space for proper return airflow. For units installed in closets or mechanical rooms, provide sufficient return grill area for proper airflow.
9. Provide ready access to water valves and fittings, and screwdriver access to unit side panels, discharge collar, and all electrical connections.
10. Where access to side panels is limited, pre-removal of the control box side mounting screws may be necessary for future servicing.
11. For units that are installed in enclosed spaces (such as furred-in closets or behind finished ceilings), provide access panels to allow for the installation, maintenance, service, and removal of the unit.
12. For CV/SAV applications verify that the proper thermostat or third-party DDC exists for unit operation.
13. For VAV applications, verify that VAV air terminal units have been installed or will be installed prior to starting up the unit. Also verify that a control interface will be available.

If any of the above items are missing or incorrect, contact your local Carrier equipment sales office.

IMPORTANT: It is the installing contractor's responsibility to ensure that all equipment is installed with proper access for service, start-up, installation of accessories, configuration of control and other components, and equipment removal in accordance with Carrier's recommended service clearances and installation instructions. Please refer to the Carrier Commercial WSHP Warranty Statement (document number 04-570008-01) for details on warranty exclusions regarding equipment, access, removal and clearances.

Step 2 — Check Unit

Upon receipt of equipment at the job site, inspect the carton or crating of each unit, and inspect each unit for damage on both the interior and exterior. Note any damage and contact your local Carrier equipment sales office.

To prepare the unit for installation, complete the procedures listed below:

1. Verify that the correct unit has been received. Check the unit capacity (tonnage), voltage, orientation, and configuration.
2. Compare the electrical data on the unit nameplate to verify the jobsite power feed (voltage, amperage, MCA) and power protection (MOCP).
3. Verify that the unit is the correct model for the entering water temperature of the job (standard or extended range).
4. Remove the unit packaging, keeping the unit attached to the shipping pallet. Do not destroy packaging. Save for re-installation on the unit if the unit will not be fully installed.
5. Open the unit access panel. Verify that the refrigerant tubing is free of kinks or dents, and that it does not touch other unit components.
6. Check the water piping and piping connections to make sure they are free from defects, kinks, dents, and appear to be water tight. Verify system operating water pressure.
7. Inspect the blower assembly. Verify that the blower has not come lose during shipping. Verify clearance between the blower wheel and the blower housing. Verify free blower rotation.
8. Inspect all electrical connections. Be sure connections are clean and tight at the terminals.
9. Check unit controls. If a CV unit, verify a thermostat or DDC control is available to control the unit. If a VAV unit, verify proper sensors have been provided and a commissioning interface will be available.
10. Remove any shipping brackets from the unit.
11. Verify all modules/pieces have been received.

If any of the above items are missing or incorrect, contact your local Carrier equipment sales office.

Before unit installation, read all manuals and become familiar with the unit and its operation. Thoroughly check out the system before operation. Complete the inspections and instructions listed below to prepare a unit for installation. See Tables 3 and 4 on pages 8 and 9 for unit physical data and Table 7 on page 26 for unit electrical data.

Step 3 — Locate Unit

Locate unit in an indoor area that allows easy removal of the filters, access panels, and accessories. Make certain enough space is available for service personnel to perform maintenance or repairs.

Provide sufficient room to make all water, duct, and electrical connections. If the unit is located in a small mechanical equipment room, make sure adequate space is available for air to return freely to the unit. These units are not approved for outdoor installations and must be installed inside the structure. Do not locate in areas that are subject to freezing.

MINIMUM REQUIRED AREA FOR UNIT INSTALLATION

This requirement specifically applies to units utilizing A2L refrigerants with refrigerant charge exceeding 62 oz. per refrigerant circuit. It is imperative to adhere strictly to the guidelines outlined in the UL 60335-2-40 standard, ensuring both adequate space allocation and minimum airflow rate to facilitate safe installation and maintenance of the unit. The standard specifies minimum installation area, minimum circulation airflow rate and/or ventilation airflow requirements, and restricts the use of ignition sources in ductwork and spaces. Additionally, the standard may require a refrigerant leak detection system provided with the unit. For equipment using R-454B refrigerant with charge amounts of 64 oz. or less per circuit, UL 60335-2-40 does not require an installation area limit, or refrigerant leak detection system, circulation airflow, or ventilation airflow mitigation strategies. 50BV unit's fan(s) is activated during a refrigerant leak event and meets the minimum required airflow rate outlined in Table 2.

Table 2 — 50BV Minimum Required Area for Installation

50BV UNIT SIZE	NO. OF MANIFOLDED REFRIGERATION CIRCUITS	TOTAL REFRIGERATION CHARGE OZ. (kg)	REFRIGERATION CHARGE PER CIRCUIT OZ. (kg)	CEILING HEIGHT FT (M)[a]					QMIN CFM (M^3/hr)[b]	
				7.2 (2.2)	8 (2.4)	9 (2.7)	10 (3.0)	12 (3.7)		
				Minimum Area of the Total Conditioned Space (ft^2) / (m^2)					Per Refrigerant Circuit	Total Unit
034	2	528.0	264.0	973.2	878.1	780.5	702.5	585.4	878.1	1756.2
		(15)	(7.5)	(90.4)	(81.6)	(72.5)	(65.3)	(54.4)	(1492)	(2984)
044	4	576.0	144.0	1061.7	957.9	851.5	766.3	638.6	479.0	1915.8
		(16.3)	(4.1)	(98.6)	(89)	(79.1)	(71.2)	(59.3)	(814)	(3255)
054	4	1136.0	284.0	2093.9	1889.2	1679.3	1511.4	1259.5	944.6	3778.4
		(32.2)	(8.1)	(194.5)	(175.5)	(156)	(140.4)	(117)	(1605)	(6420)
064	4	1056.0	264.0	1946.5	1756.2	1561.0	1404.9	1170.8	878.1	3512.4
		(29.9)	(7.5)	(180.8)	(163.1)	(145)	(130.5)	(108.8)	(1492)	(5968)

NOTE(S):

a. The minimum height of the room is 7.2 feet (2.2 m).
b. Minimum CFM of a unit that requires a blower for migration mode.

ACOUSTICAL CONSIDERATIONS

Proper acoustical considerations are a critical part of every system's design and operation. Each system design and installation should be reviewed for its own unique requirements. For job specific requirements, contact an acoustical consultant for guidance and recommendations. Consider the following recommendations:

1. Locate unit and supply/return ducts away from noise-sensitive locations, including sleeping areas, private offices, and other sound sensitive spaces.
2. Whenever possible, work with the architect to locate the equipment rooms around the perimeters of restrooms, hallways, fire escapes, stair wells, etc., to reduce noise transmission. This allows not only for isolation from radiated sound but also enables the contractor to route duct systems around sensitive locations.
3. Construct the equipment room of concrete block or use a double offset stud wall with interwoven insulation. Seal all penetrations.
4. Design the system for low total static pressure.
5. Use suitable vibration isolation pads or isolation springs according to the design engineer's specifications.
6. A flexible canvas duct connector is recommended on both the supply and return air sides of units to be connected to system ductwork.
7. Use a minimum of 15 ft of return ductwork between the last air terminal or diffuser and the unit.
8. Insulate supply and return ducts with 2 in., 3-lb density insulation.
9. Round duct is recommended. If rectangular ductwork is used, keep aspect ratios as small as possible (i.e., as close to square as possible).
10. Avoid any direct line of sight from return air grilles into the unit's return. If return air is to be ducted to an equipment room, an elbow should be installed within the equipment room.
11. Running a return air drop to near the floor of the room will aid in sound attenuation.
12. Do not exceed the recommended supply duct velocity of 2,000 fpm.
13. Do not exceed the recommended return duct velocity of 1,000 fpm.
14. Use turning vanes on 90-degree elbows.
15. Place isolation springs under each corner of the unit and under compressor sections.
16. Consider the use of compressor sound blankets where the above steps cannot be taken.

UNIT PLACEMENT AND RIGGING

Ensure that the floor or equipment support structure is structurally strong enough to support the weight of the equipment with minimum deflection. A good, level floor is required for proper unit operation and to ensure proper fit-up and alignment of all bolt-together and union-coupled modules on modular units. Utilize vibration isolation springs or pads between the unit and the support structure or floor to reduce vibration and sound.

Use proper lifting and handling practices to avoid damage to the unit. See Tables 3 and 4 for typical operating weights and Fig. 7-14 for unit dimensions.

NOTE: Unit options may change unit operating weights and dimensions.

MODULAR UNITS (50BVT,V,W)

Modular units are shipped in multiple sections (except the low boy size 034) for easy movement and installation without the need for breaking refrigerant lines. Move modular units with a fork truck using the included base rails or use spreader bars and lifting straps as shown in Fig. 1.

NOTE: Do not rotate or tip any of the main unit sections prior to or during installation.

LOW BOY UNITS

50BV low boy units are short and wide, to allow installation in height restricted areas. Low boy units ship as either one (unit size 034) or two (unit sizes 044-064) separate modules that are mated together during the final installation. See Fig. 9, 10, 13, and 14 for low boy base unit dimensions. The filter rack/economizer section of the low boy unit can be field removed for easier installation. See Fig. 5 and 6 for low boy field splits.

HIGH BOY UNITS

50BV high boy units are tall and thin and ship in two (size 034) or four (sizes 044-064) modules that require field assembly of fan and main sections). See Fig. 7, 8, 11, and 12 for high boy base unit dimensions. The filter rack/economizer can be removed from the main section to allow all high boy units to fit through a 36 in. wide opening. NOTE: The fan assembly needs to be rotated. See Fig. 3 and 4 for high boy field splits.

Refer to Fig. 7-14 for unit dimensions. Refer to Tables 3 and 4 for physical data.

REMOVE PACKAGING

Remove all protective plastic and other supports only after the units have been installed. Remove and discard unit top cover protector, filter cover, controller display protector, remove any included shipping supports, and water piping connection packaging.

ASSEMBLING MODULAR UNITS

50BVT,V,W unit sizes 034-064 ship in pieces. Reassemble the unit. Use the loose hardware provided in the main air-conditioning section and the instructions below.

1. The filter/economizer section ships bolted to the main air-conditioning section and can be removed in the field (high and low boy units). When reattaching the filter/economizer section to the main air-conditioning section, place the filter side of the filter/economizer section facing out and away from the main air-conditioning section.
2. If the unit has two filter/economizer and two main air-conditioning sections (unit sizes 044-064), bolt the remaining filter/economizer section and main air-conditioning section together, as in Step 1.
3. For units with two filter/economizer and two main air-conditioning sections, use the provided unions to assemble the water connections between the two additional sections joined in Step 2.
4. For unit sizes 044-064, connect the condensate drain hoses from the "B" side of the unit to the drain manifold on the "A" side of the unit.
5. For unit sizes 044-064, connect power wiring from the main terminal block in the "A" side of the unit to the power terminal block in the "B" side of the unit.

⚠ CAUTION

Remove all shipping blocks, if any, under blower housing or damage to the fan may occur.

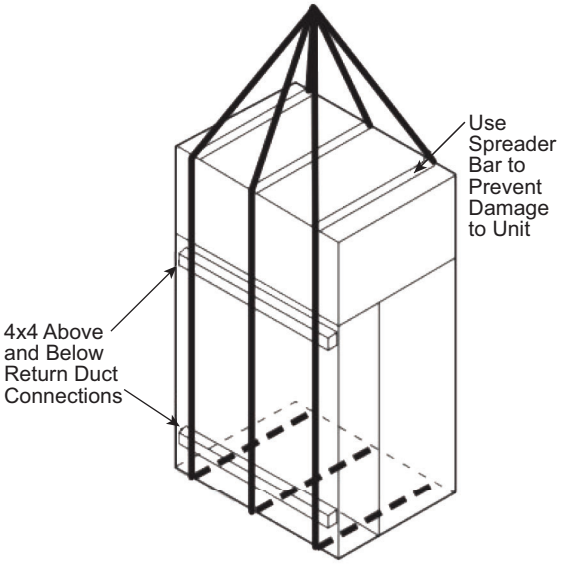

Fig. 1 — Modular Unit Rigging

PROTECTION

Once the units are properly positioned on the jobsite, cover them with either a shipping carton, vinyl film, or an equivalent protective covering. Cap open ends of pipes stored on the jobsite. This precaution is especially important in areas where painting, plastering, or spraying of fireproof material, etc. is not yet complete. Foreign material that accumulates within the units can prevent proper start-up and require costly clean-up operations. Before installing any of the system components, be sure to examine each pipe, fitting, and valve, and remove any dirt or foreign material found in or on these components.

See Fig. 2 for model nomenclature details.

Position:	1	2	3	4	5	6	7	8	9	10	11	12	13	14	15	16
Example:	5	0	B	V	T	0	3	4	–	F	C	6	2	G	–	–

Model Series (Pos 1-4)
50BV – OMNIZONE Modular Indoor Self-Contained Unit

Unit Type (Pos 5)[a]
T – (CV) Cool Only[b]
V – (CV) Heat Pump[b]
W – (VAV) Cool Only[c]

Nominal Capacity (Pos 6-8)
034 – 30 Tons
044 – 40 Tons
054 – 50 Tons
064 – 60 Tons

Economizer and Hot Gas Reheat Options (Pos 9)
- – None
A – Waterside Economizer (WSE) with 3-Way Valve Package and Controls
C – Cycling Hot Gas Reheat Coil
D – Cycling Hot Gas Reheat and WSE with 3-Way Valve Package and Controls
F – Modulating Hot Gas Reheat[d]
G – Modulating Hot Gas Reheat and WSE with Valve Package Controls[d]

Factory-Installed Options (Pos 15-16)
Refer to price pages of unit for details.

Revision / Controls (Pos 14)
G – R-454B, CV with Standard Controls (50BVT, 50BVV)[c]
H – R-454B, VAV with SCU Open Controller (50BVW)[a]

Cabinet Changes (Pos 13)[e]
1 – High Boy Cabinet
2 – Low Boy Cabinet

Voltage Description (Pos 12)
1 – 575-3-60
5 – 208/230-3-60
6 – 480-3-60

Airflow Configuration (Pos 11)[f,g]
C – Rear Return, Top Supply
D – Rear Return, Front Supply
E – Rear Return, Rear Supply

Indoor Motor and Drive Options (Pos 10)[h]
F — 7.5 Hp with Standard Drive
G — 10 Hp with Standard Drive
H — 15 Hp with Standard Drive
J — 20 Hp with Standard Drive
R — 7.5 Hp with Medium Drive
S — 10 Hp with Medium Drive
T — 15 Hp with Medium Drive
U — 20 Hp with Medium Drive
5 — 7.5 Hp with High Drive
6 — 10 Hp with High Drive
7 — 15 Hp with High Drive
8 — 20 Hp with High Drive

NOTE(S):
a. VAV requires factory-installed modulating HGRH.
b. CV units (50BVT and 50BVV) do not receive factory-installed controls and can only have the no controller option (Pos 14 = G).
c. Only VAV units (50BVW) will have the factory-installed controller (Pos 14 = H).
d. F or G is required for VAV units.
e. See dimensional diagrams for physical size difference between High and Low Boy.
f. Low Boy cabinets only available with Top or Front Supply.
g. High Boy cabinets only available with Front or Rear Supply.
h. HP ratings are per motor. Most 50BV units have two indoor-fan motors. See price pages for additional information.

LEGEND
CV — Constant Volume
HGBP — Hot Gas Bypass
HP — Horsepower
Pos — Position
VAV — Variable Air Volume
WSE — Water Economizer

Fig. 2 — 50BV Model Nomenclature

Table 3 — Physical Data — 50BVT, V, W

UNIT 50BVT, V, W	034	044	054	064
Compressor Type	Scroll	Scroll	Scroll	Scroll
Compressor Qty	2	4	4	4
Compressor Size (Hp)	15	10	12.5	15
Refrigeration Charge per Circuit (oz)	264	144	284	264
Total Refrigeration Charge (oz)	528	576	1136	1056
Max Water Working Pressure (psig/kPa)	450/3100	450/3100	450/3100	450/3100
Number of Manifolded Refrigeration Circuits	2	4	4	4
AIR SIDE COILS				
Evaporator Coil Type	Tube-Fin	Tube-Fin	Tube-Fin	Tube-Fin
Evaporator Dimensions (H x L) (in.)	26 x 62 (2)	26 x 62 (4)	26 x 62 (4)	26 x 62 (4)
Evaporator Rows	4	3	4	4
Waterside Economizer Coil Dimensions (H x L) in. (qty)	26.2 X 61 (2)	26.2 X 61 (4)	26.2 X 61 (4)	26.2 X 61 (4)
Waterside Economizer Coil Rows	3	3	3	3
Hot Gas Reheat Coil Dimensions (H x L)	26.2 X 62.5 (2)	26.2 X 62.5 (4)	26.2 X 62.5 (4)	26.2 X 62.5 (4)
Hot Gas Reheat Coil Rows	1	1	1	1
MOTOR AND BLOWER				
Fan Motor Type	Belt Drive	Belt Drive	Belt Drive	Belt Drive
Available Fan Motors (hp)	7.5, 10, 15, 20	7.5, 10, 15, 20	7.5, 10, 15, 20	7.5, 10, 15, 20
Blower Wheel Size (Dia. x W x Qty)	18 x 18 x 1	18 x 18 x 2	18 x 18 x 2	18 x 18 x 2
Nominal CFM	12,200	16,000	20,000	24,000
WATER COIL				
Connection Type	FPT	FPT	FPT	FPT
Size	2-1/2"	2-1/2"	3"	3"
Water Coil Type (qty)	Coaxial (2)	Coaxial (4)	Coaxial (4)	Coaxial (4)
Coil; Volume Each (gal.)	2.69	1.80	2.69	2.69
RETURN AIR FILTERS				
Nominal Size of 4" Standard Filter - (H x L) in. (qty)	17 x 27 (8)	17 x 27 (16)	17 x 27 (16)	17 x 27 (16)
Weight - Operating (lb)	2,650	4,750	5,500	5,550
Weight - Shipping (lb)	2,866	4,846	5,700	5,732

Table 4 — Modulating Operating Weights

	HIGH BOY DESIGN				LOW BOY DESIGN			
	034	**044**	**054**	**064**	**034**	**044**	**054**	**064**
Main Air Conditioning Section								
Number of Sections	1	2	2	2	1	2	2	2
Main Section (ea)	1450	1175	1550	1575	2100	1825	2200	2225
Hot Gas Reheat Coil Option (ea) (lb)	40	40	40	40	40	40	40	40
Filter / Economizer Sections								
Number of Sections	1	2	2	2	1	2	2	2
Filter Section (ea)	310	310	310	310	310	310	310	310
Waterside Economizer Option (ea) (lb)	200	200	200	200	200	200	200	200
Blower Section								
Number of Sections	1	2	2	2	Included in Main Air Conditioning Section			
Fan Section with Max Motor Size (lb)	650	650	650	650				
Total Unit								
Number of Sections	3	6	6	6	2	4	4	4
Total Weight of the Unit with Options (lb)	2650	4750	5500	5550	2650	4750	5500	5550

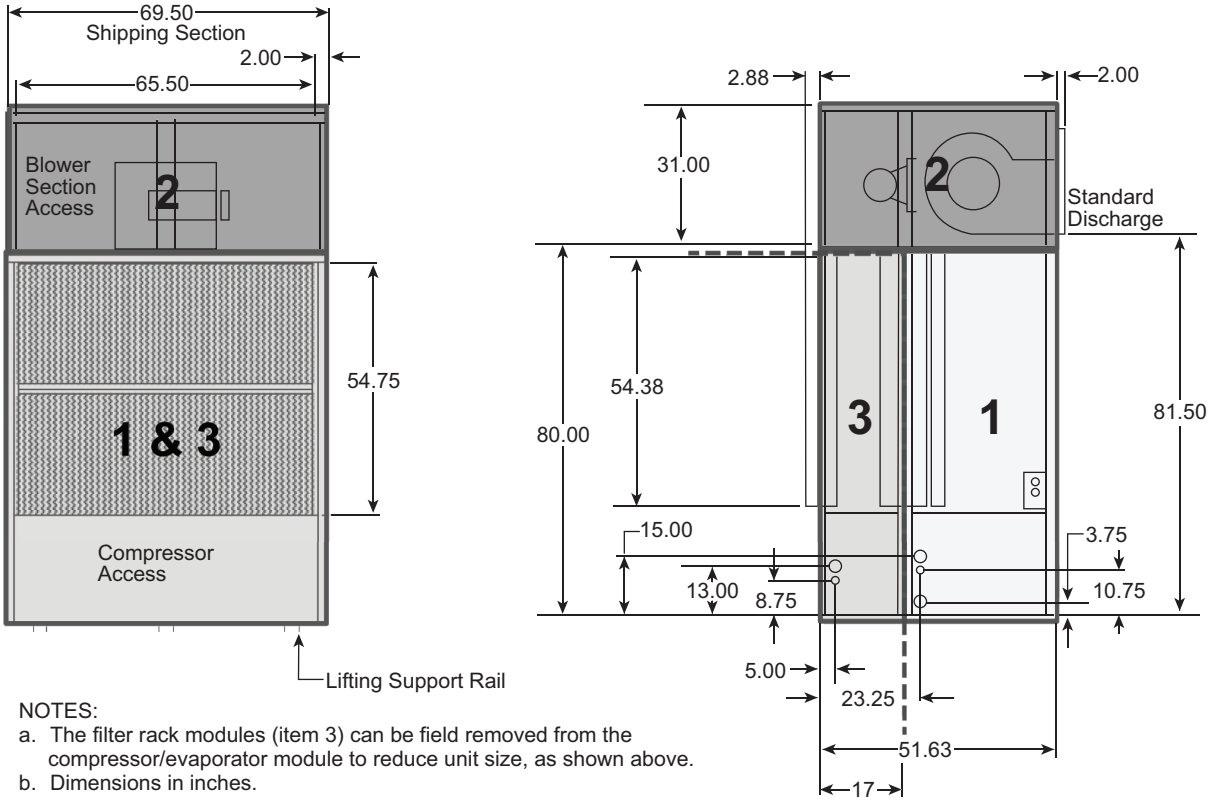

NOTES:
a. The filter rack modules (item 3) can be field removed from the compressor/evaporator module to reduce unit size, as shown above.
b. Dimensions in inches.

Fig. 3 — 50BVT, V, W High Boy Field Split (30 Ton)

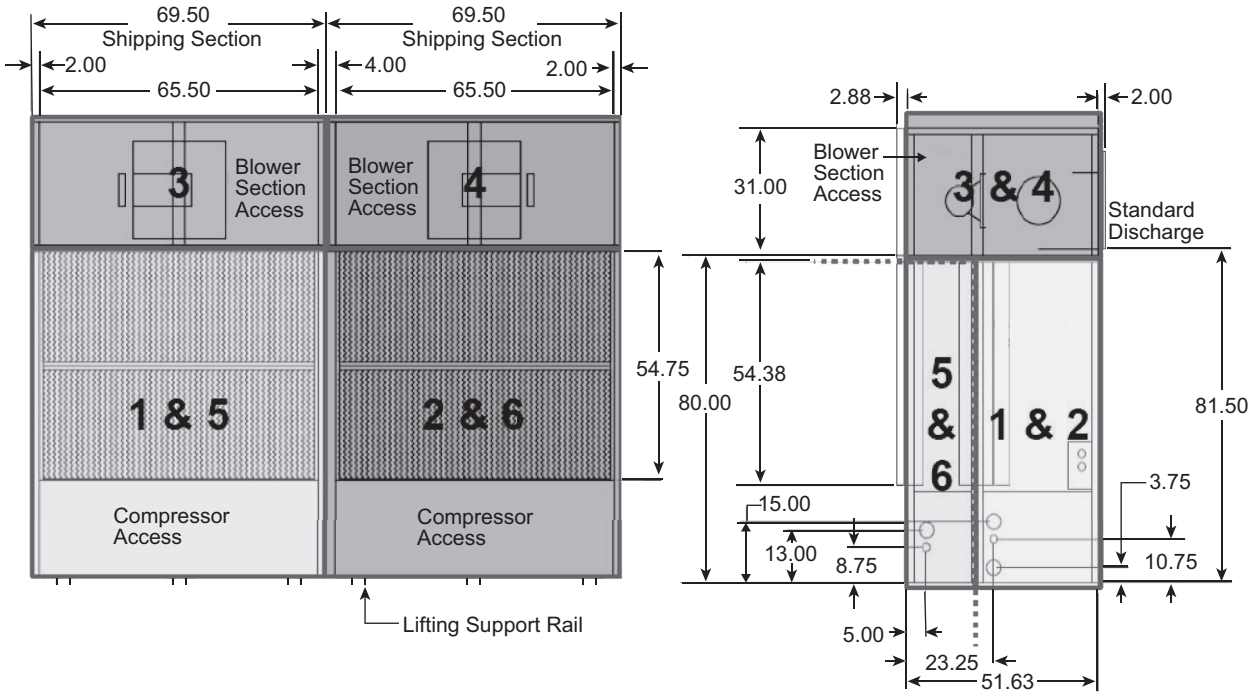

Fig. 4 — 50BVT, V, W High Boy Field Split (40-60 Ton)

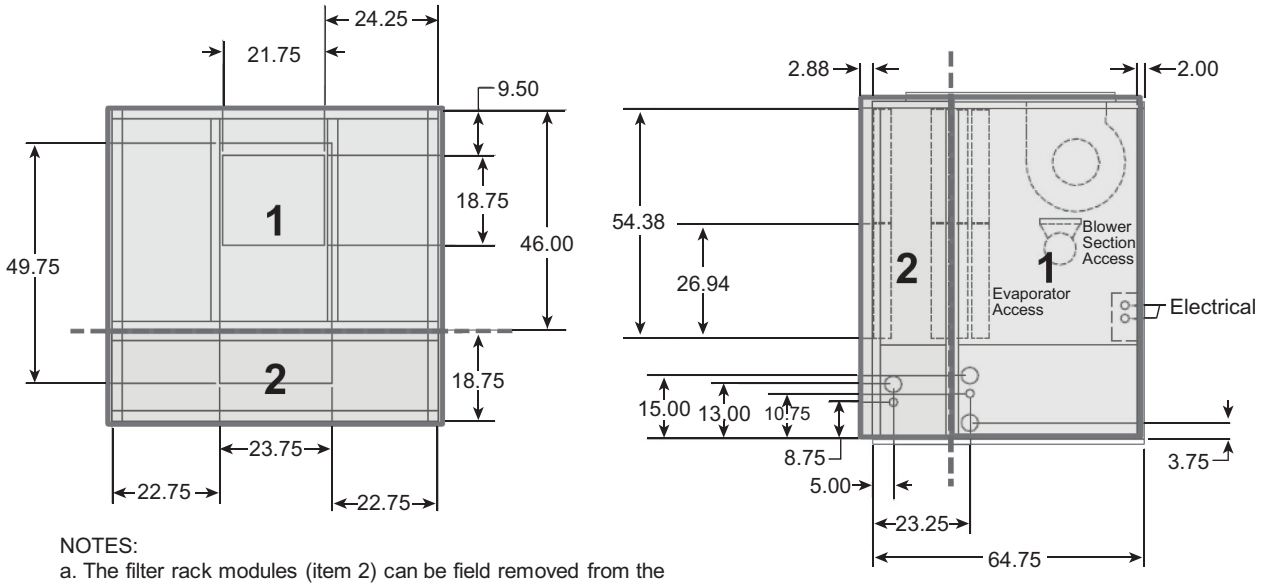

NOTES:

a. The filter rack modules (item 2) can be field removed from the compressor/evaporator module to reduce unit size, as shown above.

b. Dimensions in inches.

Fig. 5 — 50BVT,V,W Low Boy Field Split (30 Ton)

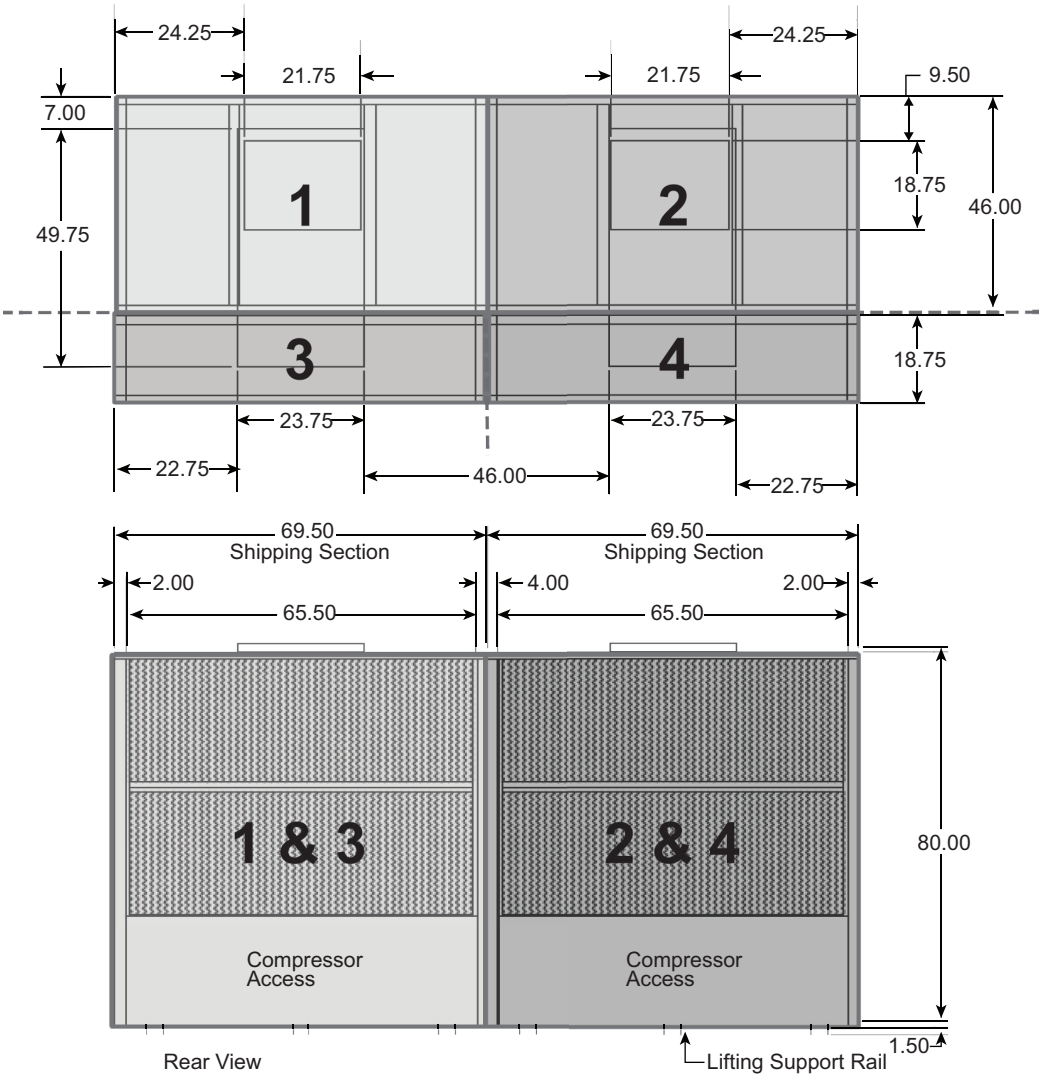

Fig. 6 — 50BVT,V,W Low Boy Field Split (40-60 Ton)

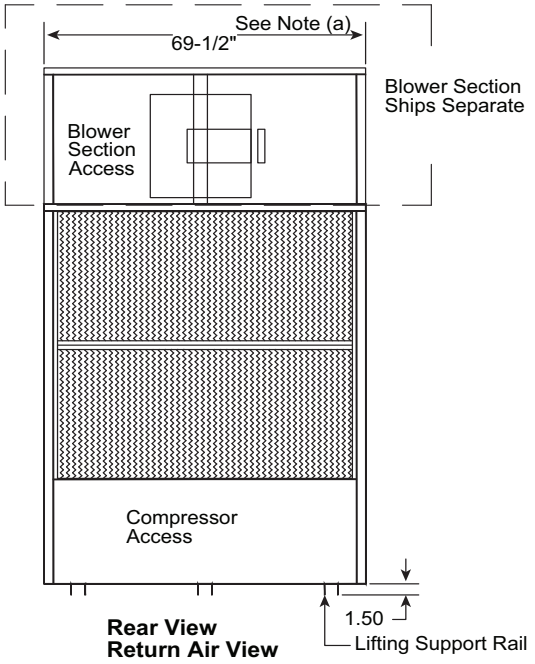

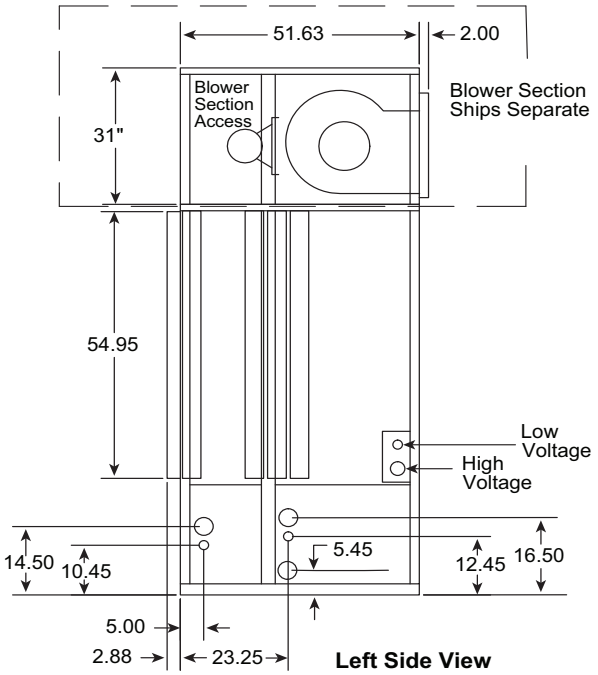

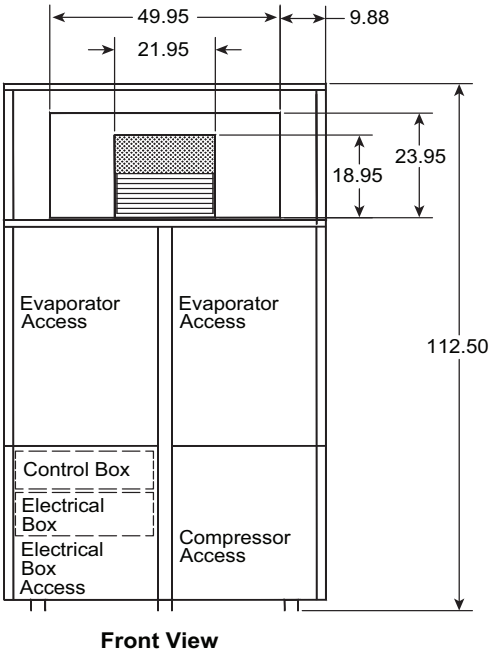

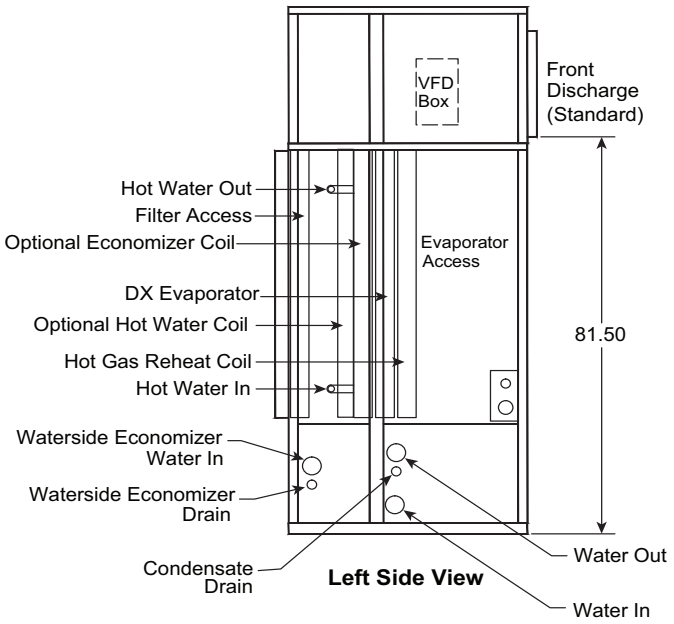

NOTE: Dimensions in [] is millimeters.

WATER CONNECTIONS	
H_2O In[a]	2.5
H_2O Out[a]	2.5
Condensate[a]	0.75
Economizer Condensate	1.25
HW In/Out Sweat Connection	1.38

NOTE(S):

a. FTP Type Connection.

FILTERS	
NOMINAL	**QUANTITY**
17 x 27 x 4	8

NOTES:

a. Optional hot water coil connections may add up to 3 in. on both the left and right side of the unit increasing the unit width an additional 6 in.

b. Dimensions in inches.

c. Recommended minimum service clearances are as follows:

1. Front and rear: 36 in.
2. Left of right side: 65 in. for coil removal
3. Side opposite coil removal: 36 in.

d. For all other airflow configuration drawings see *SCU*Builder program.

e. Dimensions Include Base Rail Height (1.5 in.).

Fig. 7 — 50BVT,V,W 034 (High-Boy) Dimensions
Rear Return, Front Supply (with or without Waterside Economizer or Hot Water Coil)

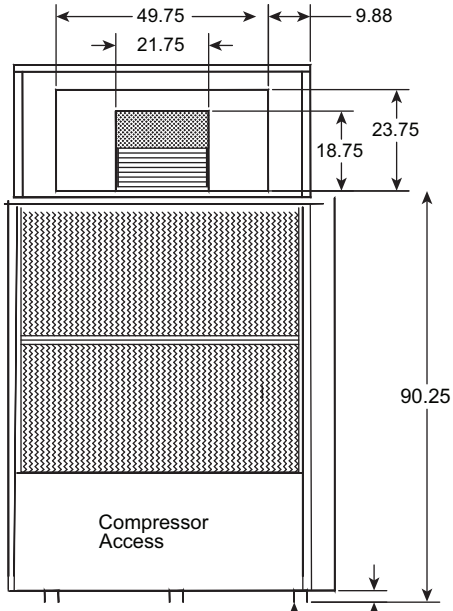

Rear View
Return Air View

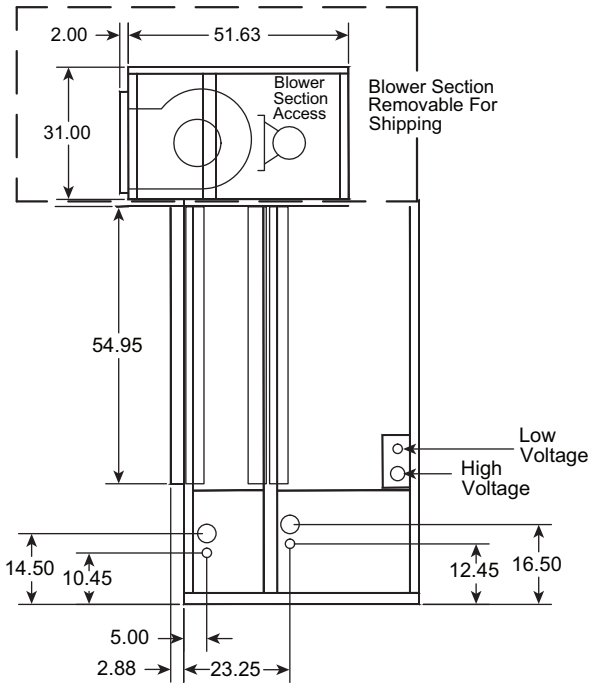

Left Side View

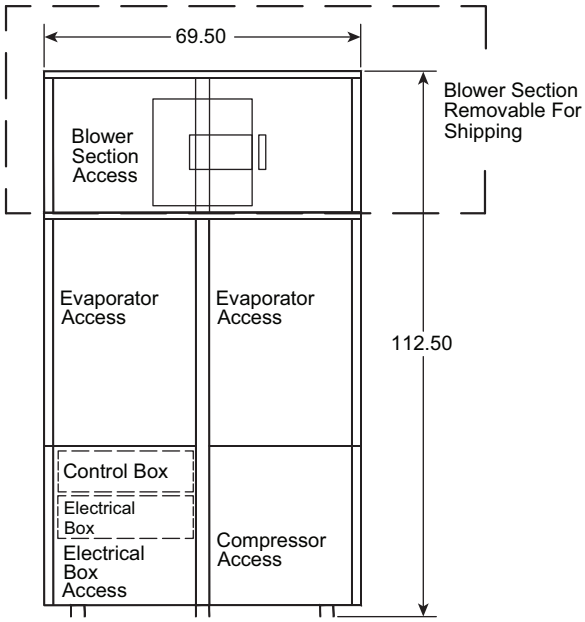

Front View

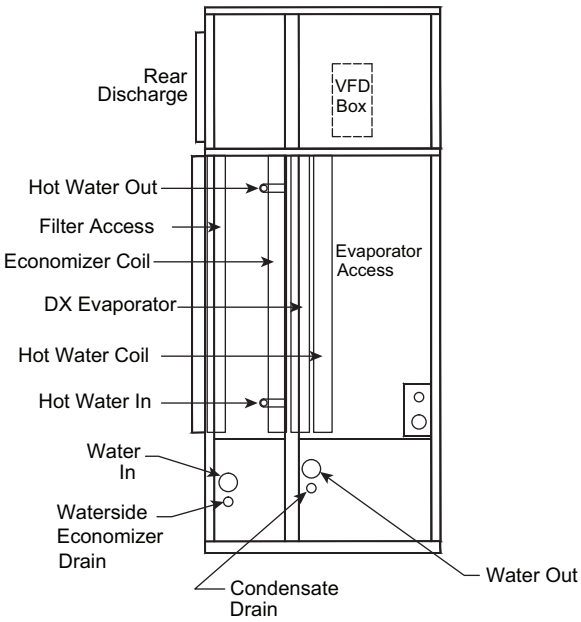

Left Side View

WATER CONNECTIONS	
H_2O In[a]	2.5
H_2O Out[a]	2.5
Condensate	1.25
Economizer Condensate	1.25
HW In/Out	1.38

NOTE(S):

a. FTP Type Connection.

FILTERS	
NOMINAL	**QUANTITY**
17 x 27 x 4	8

NOTES:

a. Optional hot water coil connections may add up to 3 in. on both the left and right side of the unit increasing the unit width an additional 6 in.

b. Dimensions in inches.

c. Recommended minimum service clearances are as follows:

1. Front and rear — 36 in.
2. Left of right side — 65 in. for coil removal
3. Side opposite coil removal — 36 in.

d. For all other airflow configuration drawings see *SCU*Builder program.

e. Dimensions Include Base Rail Height (1.5 in.).

Fig. 8 — 50BVT,V,W 034 (High Boy) Dimensions
Rear Return, Rear Supply (with or without Waterside Economizer or Hot Water Coil)

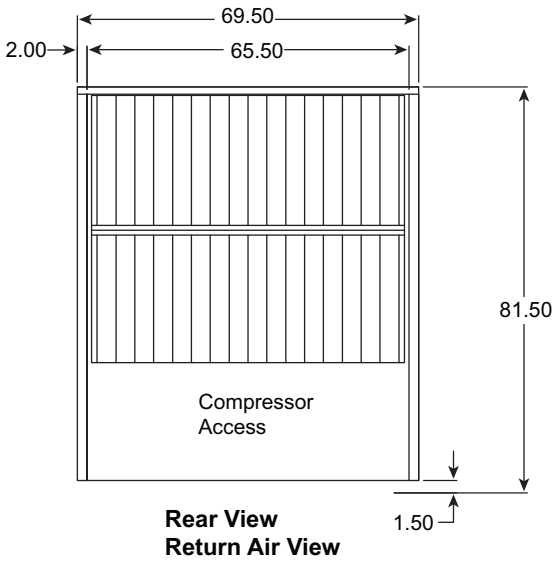

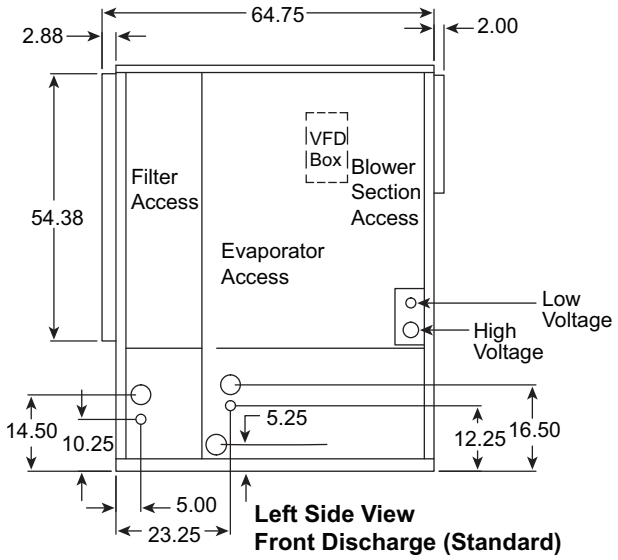

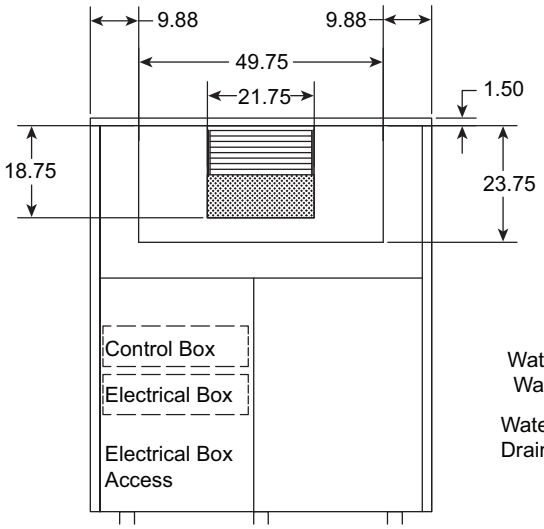

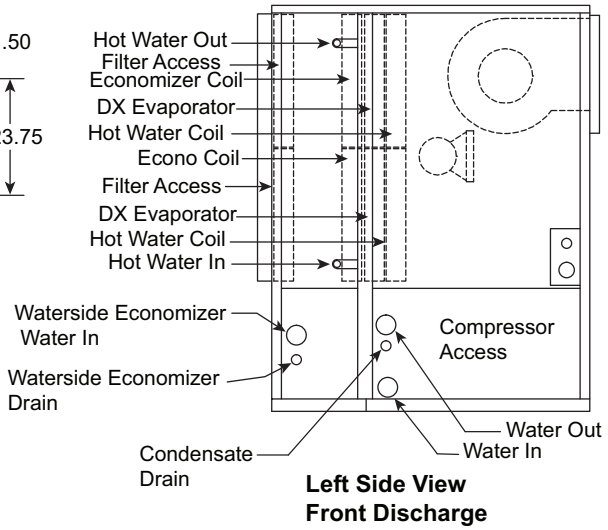

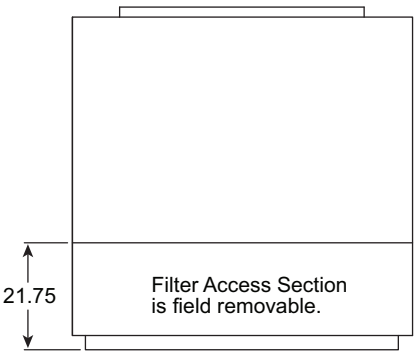

WATER CONNECTIONS	
H_2O In[a]	2.5
H_2O Out[a]	2.5
Condensate[a]	0.75
Economizer Condensate	1.25
HW In/Out Sweat Connection	1.38

NOTE(S):

a. FPT Type Connection.

FILTERS[a]		
NOMINAL	**ACTUAL**	**QUANTITY**
17 x 27 x 4	16.5 x 26.50	8

NOTE(S):

a. 4 in. thick.

NOTES:

a. Dimensions in inches.

b. Recommended minimum service clearances are as follows:

1. Front and rear — 36 in.
2. Left and right side — 65 in. for coil removal
3. Side opposite coil removal — 36 in.

c. For all other airflow configuration drawings see *SCU*Builder program.

d. Dimensions include base rail height (1.5 in.).

Fig. 9 — 50BVT,V,W 034 (Low-Boy) Dimensions
Rear Return, Front Supply (with or without Waterside Economizer or Hot Water coil)

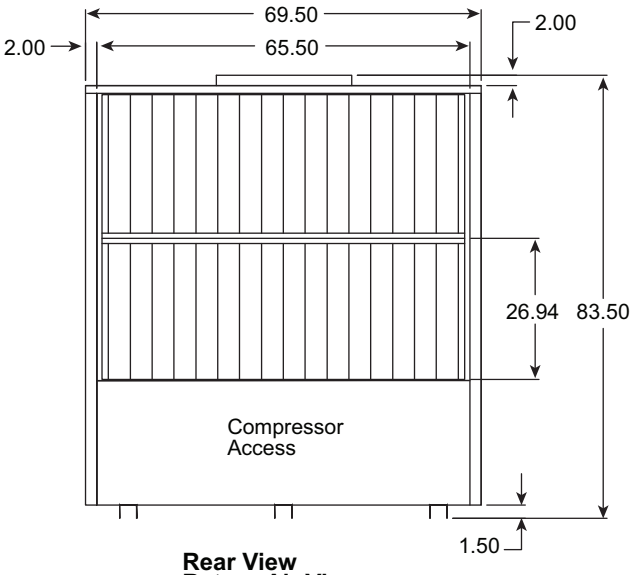

Rear View
Return Air View

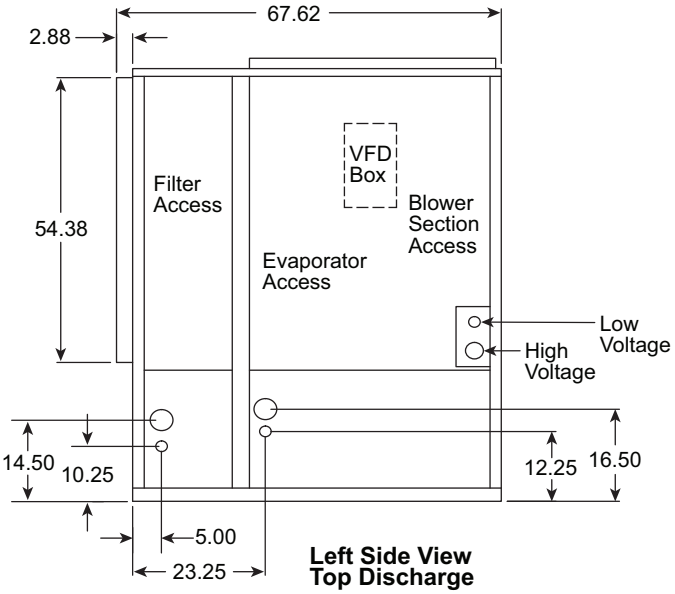

Left Side View
Top Discharge

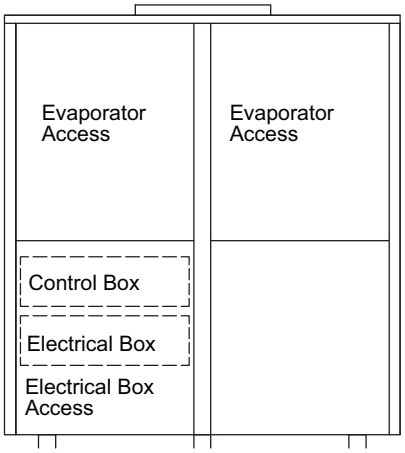

Front View

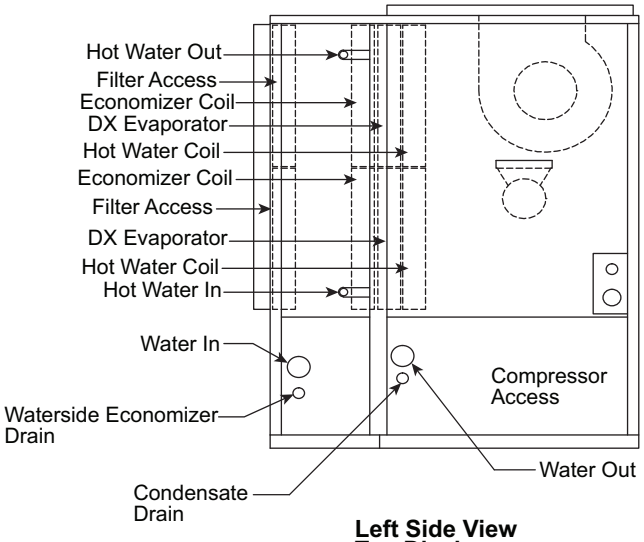

Left Side View
Top Discharge

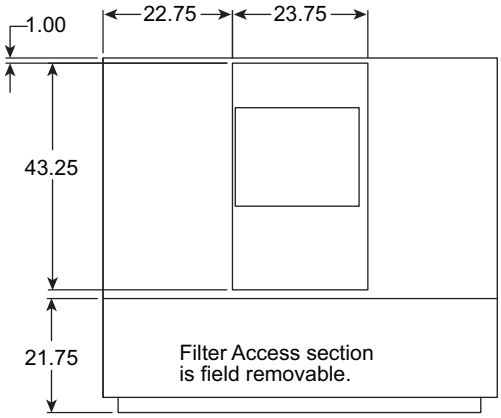

Top View
Top Discharge

WATER CONNECTIONS	
H_2O In[a]	2.5
H_2O Out[a]	2.5
Condensate[a]	0.75
Economizer Condensate	1.25
HW In/Out Sweat Connection	1.38

NOTE(S):

a. FPT Type Connection.

FILTERS		
NOMINAL	ACTUAL	QUANTITY
17 x 27 x 4	16.5 x 26.50	8

NOTES:

a. Dimensions in inches.

b. Recommended minimum service clearances are as follows:

1. Front and rear — 36 in.
2. Left and right side — 65 in. for coil removal
3. Side opposite coil removal — 36 in.

c. For all other airflow configuration drawings see *SCU*Builder program

d. Dimensions include base rail height (1.5 in.).

Fig. 10 — 50BVT,V,W 034 (Low Boy) Dimensions
Rear Return, Top Supply with or without Waterside Economizer or Hot Water Coil

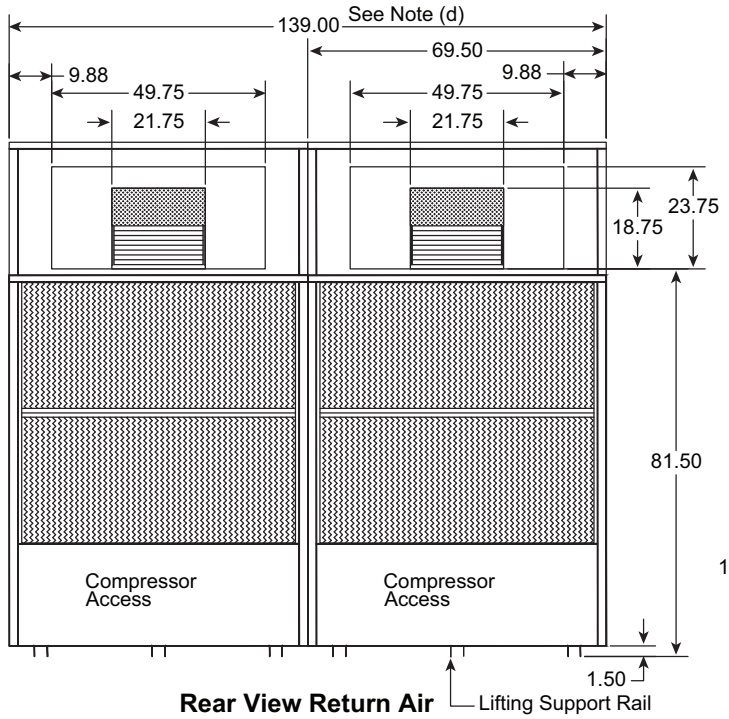

Rear View Return Air

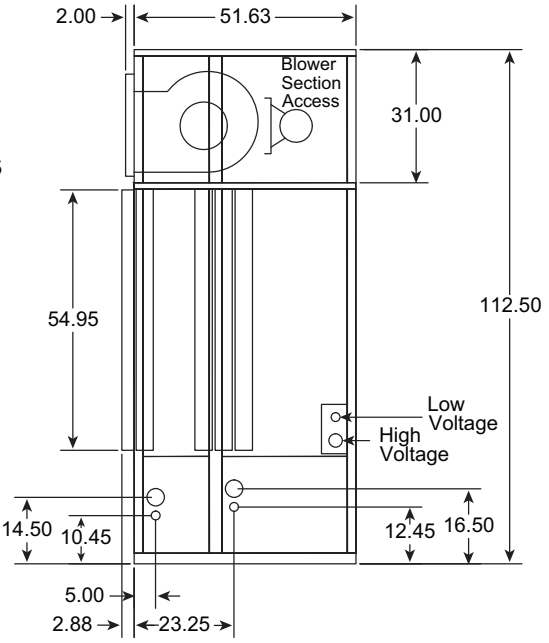

Left Side View

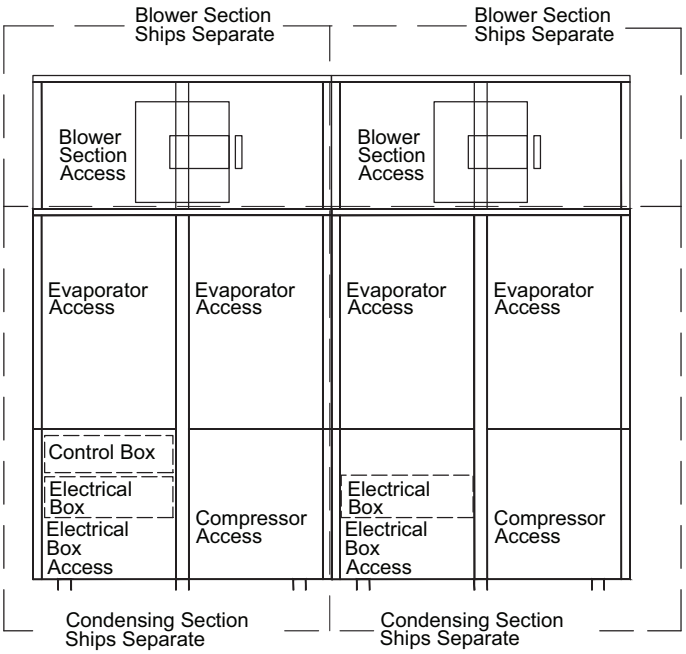

Front View

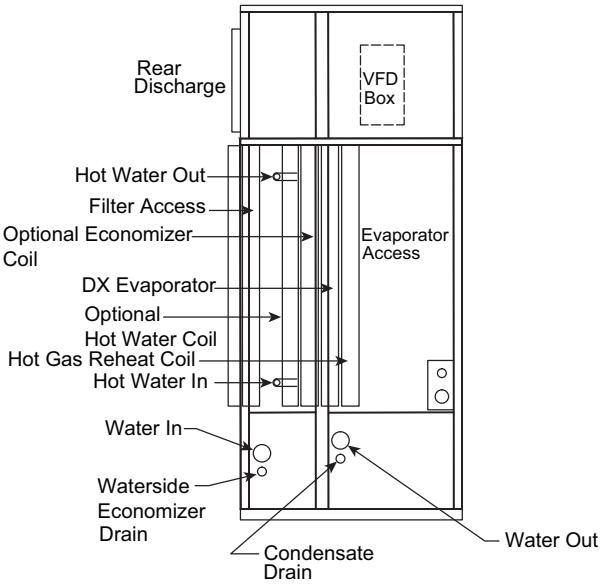

NOTES:

a. Dimensions in inches.

b. Recommended minimum service clearances are as follows:

1. Front and rear — 36 in.
2. Left and right side — 65 in. for coil removal

c. For all other airflow configuration drawings see *SCU*Builder program.

d. Dimensions include base rail height (1.5 in.).

WATER CONNECTIONS			
Model	**44**	**54**	**64**
H_2O In[a]	2.5	3.0	3.0
H_2O Out[a]	2.5	3.0	3.0
Condensate[a]	0.75	0.75	0.75
Economizer Condensate	1.25	1.25	1.25
HW In/Out Sweat Connection	1.38	1.38	1.38

NOTE(S):

a. FPT Type Connection.

FILTERS		
NOMINAL	**ACTUAL**	**QUANTITY**
17 x 27 x 4	16.5 x 29.75 x 4	16

Fig. 11 — 50BVT,V,W 044-064 (High-Boy) Dimensions
Rear Return, Rear Supply with or without Waterside Economizer or Hot Water Coil

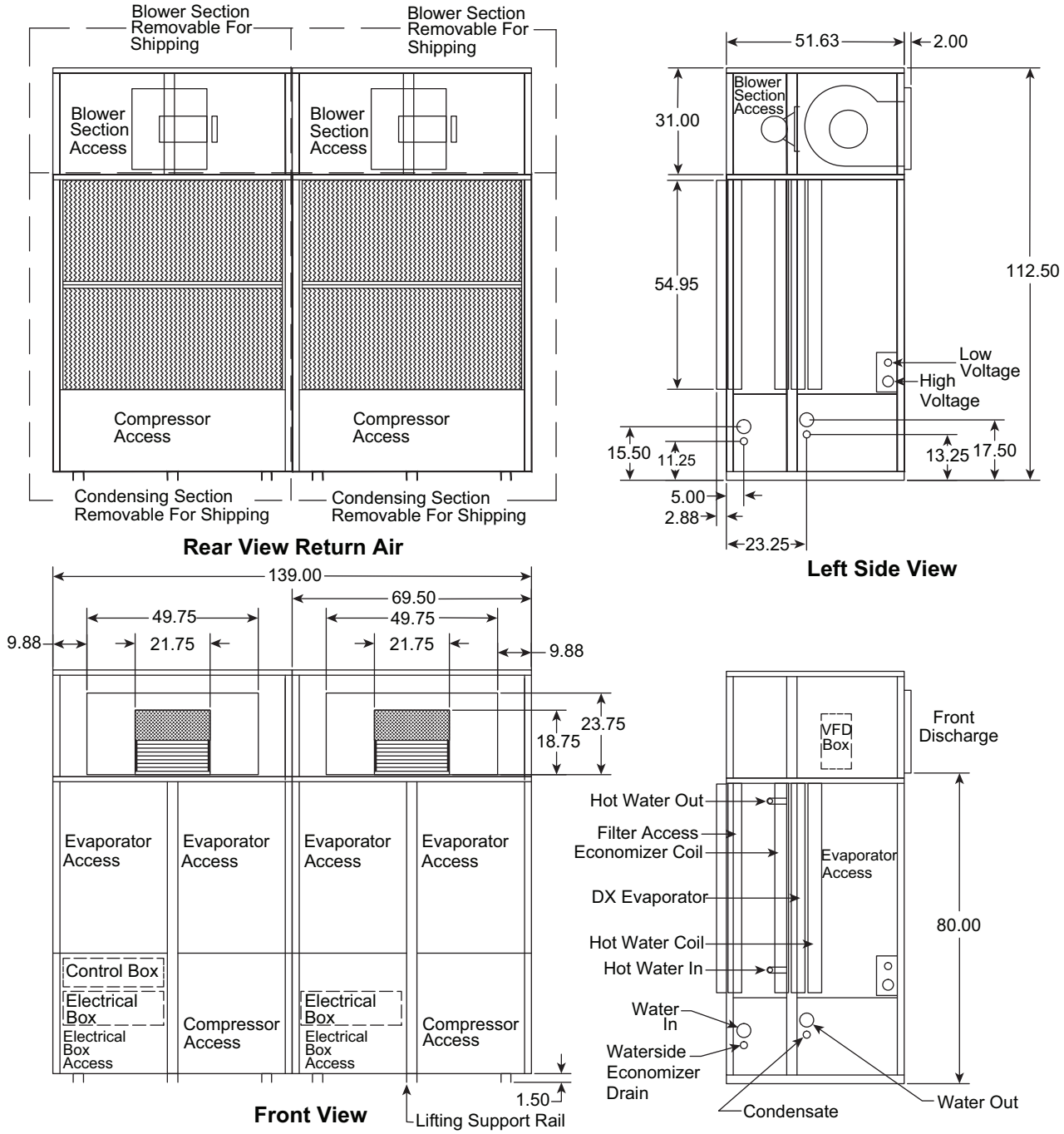

WATER CONNECTIONS	
Model	**360**
H_2O In[a]	2.5
H_2O Out[a]	2.5
Condensate	1.25
Economizer Condensate	1.25
HW In/Out	1.38

NOTE(S):

a. FPT Type Connection.

FILTERS		
NOMINAL	**ACTUAL**	**QUANTITY**
17 x 27 x 4	16.5 x 29.75 x 4	16

NOTES:

a. Dimensions in inches.

b. Recommended minimum service clearances are as follows:

1. Front and rear — 36 in.
2. Left and right side — 65 in. for coil removal

c. For all other airflow configuration drawings see *SCU*Builder program.

d. Dimensions include base rail height (1.5 in.).

Fig. 12 — 50BVT,V,W 044-064 (High Boy) Dimensions
Rear Return, Front Supply with or without Waterside Economizer or Hot Water Coil

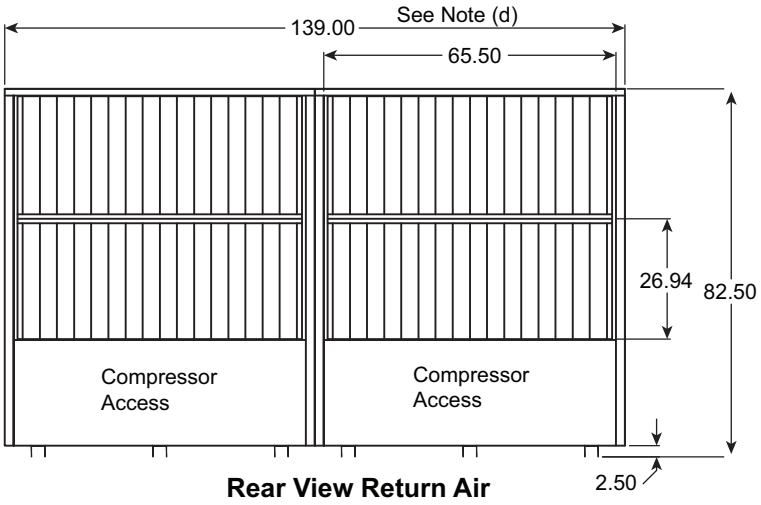

Rear View Return Air

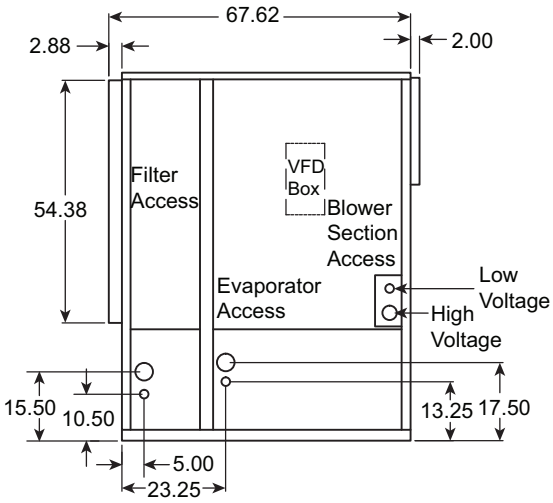

Left Side View Top Discharge

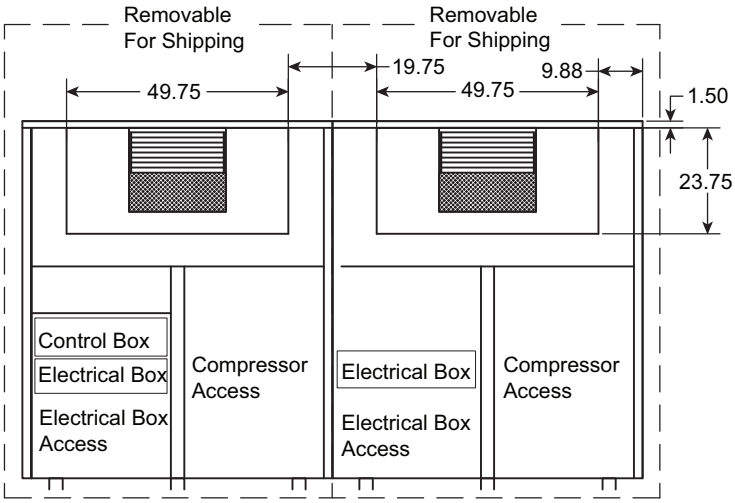

Front View

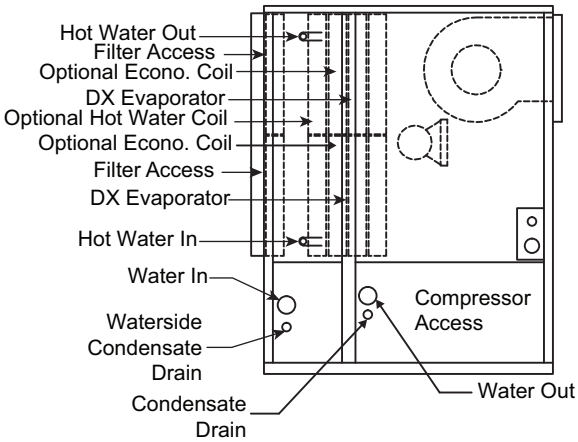

Left Side View Top Discharge

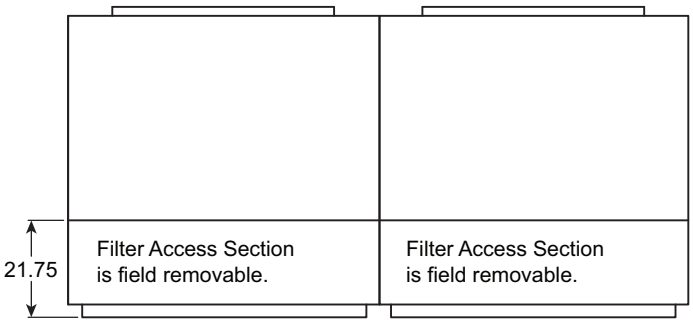

Top View

WATER CONNECTIONS			
Model	**44**	**54**	**64**
H_2O In[a]	2.5	3.0	3.0
H_2O Out[a]	2.5	3.0	3.0
Condensate[a]	1.25	1.25	1.25
Economizer Condensate[a]	1.25	1.25	1.25
HW In/Out Sweat Connection	1.38	1.38	1.38

NOTE(S):

a. FPT Type Connection.

FILTERS		
NOMINAL	**ACTUAL**	**QUANTITY**
17 x 27 x 4	16.5 x 29.75 x 4	16

NOTES:

a. Dimensions in inches.

b. Recommended minimum service clearances are as follows:

1. Front and rear — 30 in.
2. Left and right side — 65 in. for coil removal

c. For all other airflow configuration drawings see *SCU*Builder program.

d. Dimensions include base rail height (1.5 in.).

Fig. 13 — 50BVT,V,W 044-064 (Low-Boy) Dimensions
Rear Return, Front Supply with or without Waterside Economizer and Hot Water Coil

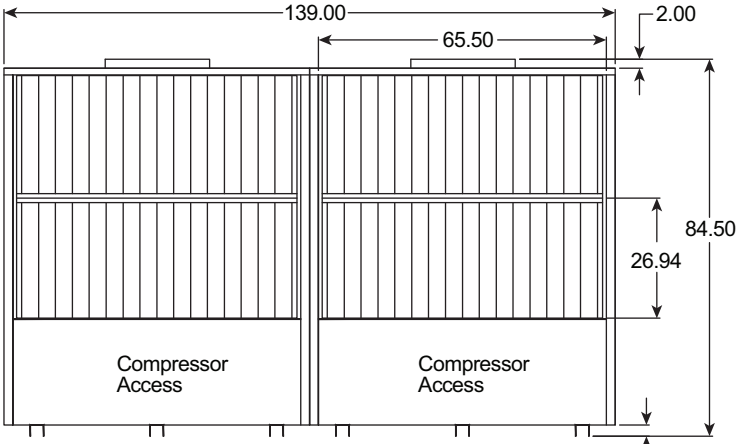

Rear View Return Air

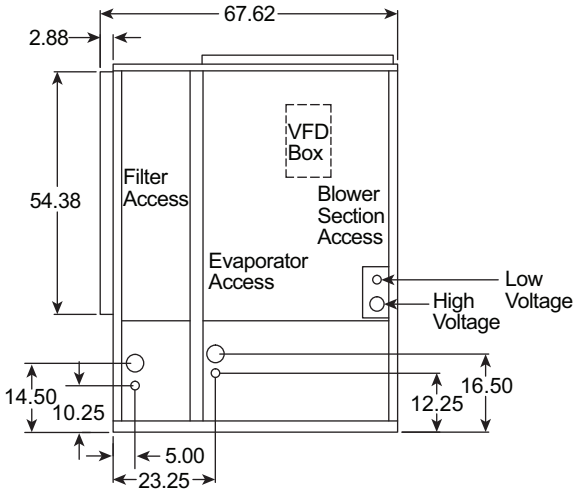

Left Side View Top Discharge

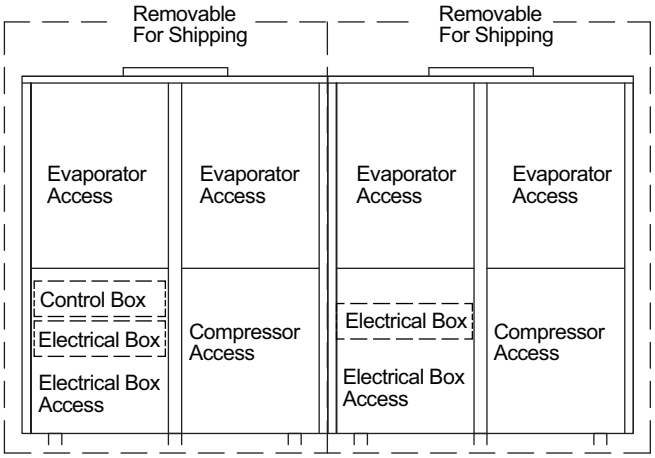

Front View

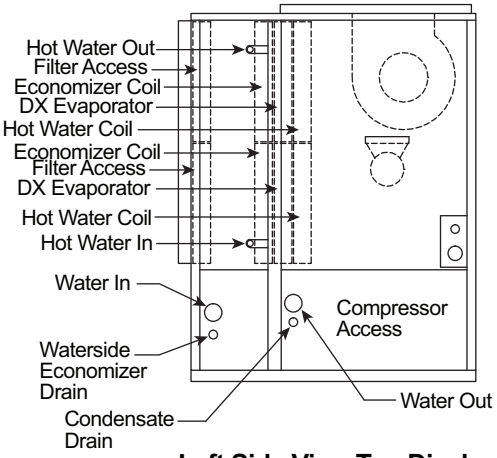

Left Side View Top Discharge

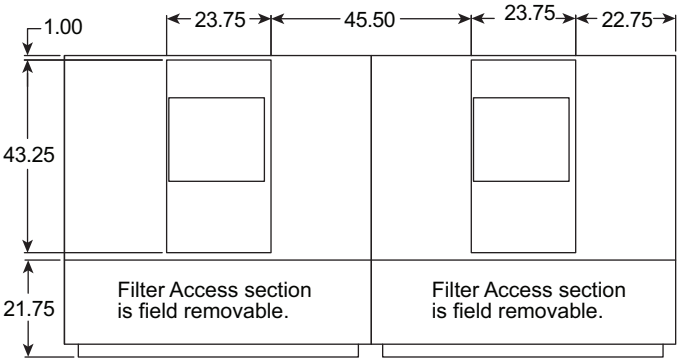

NOTES:

a. Dimensions in inches.

b. Recommended minimum service clearances are as follows:

1. Front and rear — 36 in.
2. Left and right side — 65 in. for coil removal
3. Side opposite coil removal — 36 in.

c. For all other airflow configuration drawings see *SCU*Builder program.

d. Dimensions include base rail height (1.5 in.).

WATER CONNECTIONS			
Model	**44**	**54**	**64**
H_2O In[a]	2.5	3.0	3.0
H_2O Out[a]	2.5	3.0	3.0
Condensate[a]	0.75	0.75	0.75
Economizer Condensate	1.25	1.25	1.25
HW In/Out Sweat Connection	1.38	1.38	1.38

NOTE(S):

a. FPT Type Connection.

FILTERS		
NOMINAL	**ACTUAL**	**QUANTITY**
17 x 27	16.5 x 29.75	16

Fig. 14 — 50BVT,W,V 044-064 (Low-Boy) Dimensions
Rear Return, Top Supply with or without Waterside Economizer and Hot Water Coil

Step 4 — Check Duct System

All dual fan units are required to use a "pair of pants" configuration as shown in Fig. 15. Refer to ASHRAE (American Society of Heating, Refrigerating and Air-Conditioning Engineers) standards for the duct connection to unit with 2 fans. An adequate straight length of ducting from the unit should be allowed before elbows are installed. If connecting an elbow directly to the fan outlet, a minimum straight length of 3 fan diameters from the fan outlet is recommended. Elbows should turn in the direction of fan rotation. Abrupt turns will generate air turbulence, excessive noise, and cause vibration, which can lead to component failure. Turning vanes should be used in all short radius bends. Ensure that ducting does not obstruct access to the unit for routine servicing.

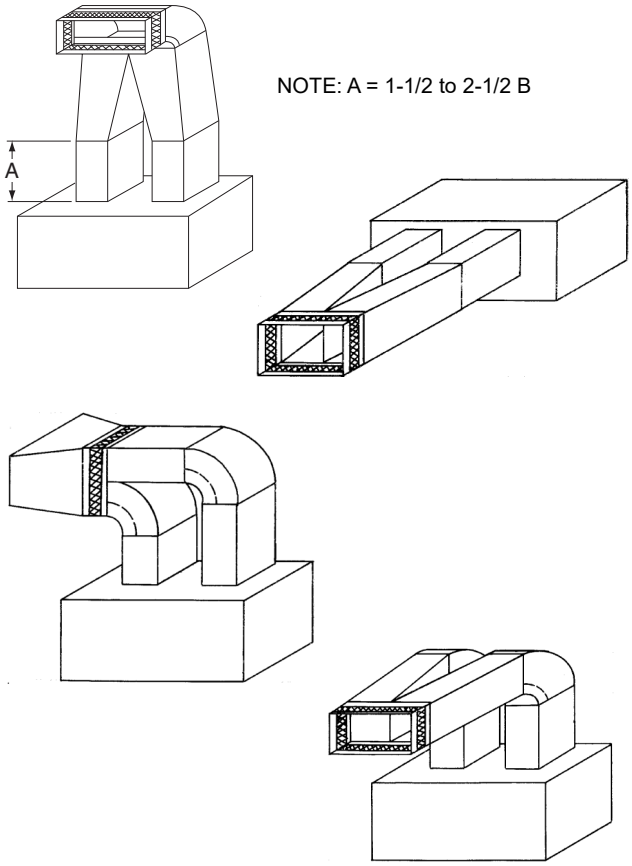

Fig. 15 — Typical Fan Discharge Connections for Multiple Fan Units

A supply air outlet collar and return air duct flange are provided on all units to facilitate duct connections. Refer to dimensional drawings (Fig. 7-14) for connection sizes and locations.

A flexible canvas duct connector is recommended on both supply and return air sides of the units to be connected to the system ductwork.

All metal ductwork should be adequately insulated to avoid heat loss or gain and to prevent condensation from forming on the duct walls. Uninsulated ductwork is not recommended, as the unit's performance will be adversely affected.

Do not connect discharge ducts directly to the blower outlet(s). The factory filter should be left in place on a free return system.

If the unit will be installed in a new installation, the duct system should be designed in accordance with ASHRAE (American Society of Heating, Refrigeration and Air-Conditioning Engineers) procedures for duct sizing. If the unit will be connected to an existing duct system, check that the existing duct system has the capacity to handle the required airflow for the unit application at an acceptable system static pressure. If the existing duct system is too small, larger ductwork must be installed.

The duct system and diffusers should be sized to handle the design airflow volumes quietly. To maximize sound attenuation of the unit's blower(s), the supply and return air plenums should be insulated for a length of at least 15 ft from the unit. Direct line of sight from return air grilles into the unit's return should be avoided. If return air is to be ducted to an equipment room, an elbow should be installed within the equipment room. Running a return air drop to near the floor of the room will aid in sound attenuation. Avoid transmitting vibrations generated by the movement of air in the ducting to the walls of the building. This is especially important where ductwork penetrates walls. The maximum recommended return air velocity is 1,000 fpm. Lower return air velocities will result in lower sound power levels. The use of round supply duct plenums should be considered, as it will significantly reduce low frequency sound at the equipment room. If rectangular supply plenums are used, the aspect ratio of the duct should be kept as small as possible (i.e., as close to square as possible). The large, flat surface areas associated with large aspect ratio duct systems will transmit sound to the space, and the potential for duct-generated noise is increased. The maximum recommended supply air duct velocity is 2,000 fpm.

DUCT STATIC PRESSURE PROBE AND TUBING (VAV ONLY)

On VAV systems, the duct static pressure sensor is factory-supplied (ships inside control cabinet) and requires field installation and field provided tubing and pressure pick-up port. The pressure sensor low port should be left open to atmosphere. The pressure sensor high port should be connected with tubing to a pressure pick up port. The pressure pick up port should be installed as close to 2/3 of the way down the duct system in a straight section of duct, away from any turning vanes, take offs, or areas in the duct that could feature turbulence.

Install the duct static pressure probe with the tip facing into the airflow. See Fig. 16.

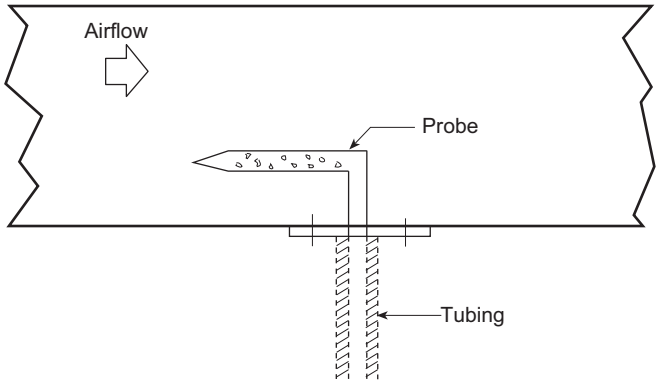

Fig. 16 — Duct Static Pressure Probe

Use 1/4 in. OD approved polyethylene tubing for up to 50 ft (3/8 in. OD for 50 to 100 ft) to connect the probe to the bulkhead fitting mounted above the unit display panel. Carefully route the tubing from the probe to this bulkhead fitting.

The static pressure control should be adjusted so that, at full airflow, all of the remote VAV terminal boxes receive the minimum static pressure required plus any downstream resistance. Control the system to the lowest static pressure set point that will satisfy airflow requirements. Lower static pressure set points reduce total required brake horsepower and reduce generated sound levels.

DUCT HIGH-STATIC (DHS) LIMIT SWITCH (VAV ONLY)

The duct high static limit switch is a field provided mechanical safety that prevents duct over pressurization. The switch is optional and is field-provided.

IMPORTANT: Use tubing that complies with local codes. Improper location or installation of the supply duct pressure tubing will result in unsatisfactory unit operation and poor performance.

Step 5 — Make Piping Connections

CONDENSER WATER PIPING

Always follow national and local codes when installing water piping to ensure a safe and proper installation. Connections to the unit should incorporate vibration eliminators to reduce noise and vibration to the building, and shutoff valves to facilitate servicing.

Prior to connecting the unit(s) to the condenser water system, the system should be flushed to remove foreign material that could cause condenser fouling. Install a screen strainer with a minimum of 20 mesh ahead of the condenser inlet to prevent condenser fouling and internal condenser tube damage from foreign material.

Supply and return water piping must be at least as large as the unit connections, and larger for long runs. Refer to the standard piping practice, when sizing, planning, and routing water piping. See dimension drawings (Fig. 7-14) for water connection sizes and locations.

Units are furnished standard with a copper heat exchanger. A cupronickel heat exchanger is also available as a factory-installed option. Copper is adequate for closed loop systems where good quality water is available. In conditions where scale formation or water treatment is questionable, the optional cupronickel heat exchanger should be used. Where the water is especially corrosive or could lead to excessive fouling, intermediate plate frame heat exchangers are recommended.

⚠ CAUTION

Galvanized pipe or fittings are not recommended with 50BV units due to the possibility of galvanic corrosion caused by dissimilar metals. When selecting piping materials, use only approved piping materials that meet applicable codes and that will handle the temperatures and pressures that may be experienced in the application. Piping systems will sweat if low temperature fluid is used in the system. For these applications, supply and return water piping should be insulated to protect from condensation damage. The minimum recommended entering water temperature to the unit is 50°F.

The unit is capable of operating with entering water temperatures as low as 50°F in cooling or heat pump heating mode, without the need for head pressure control. If the entering water temperature is expected to be lower, or more stable unit operation is desired, a field-supplied water-regulating valve may be used. The extended range option or field provided coaxial coil insulation should be supplied to prevent condensation, when the entering water temperature can be below the dew point in the unit installation location.

This unit has multiple independent refrigerant circuits with separate condensers. The individual condensers are manifolded together on the waterside to provide easy, single-point water connections. In order to achieve proper head pressure control when a water-regulating valve is used, a temperature-actuated valve is recommended. This allows any of the independent refrigerant circuits to operate while still modulating condenser water flow in response to loop water temperature.

A glycol solution should be used if ambient temperatures are expected to fall below freezing or if the loop water temperature is below 50°F while the unit is operating in heating mode. Refer to Table 5, which lists freezing points of glycol at different concentrations. Water pressure drop will increase and unit performance will decrease with increasing glycol concentrations.

Units with factory-installed waterside economizers have cooling water passing through the economizer and condenser in series while operating in the economizer mode. During normal operation, water bypasses the economizer coil.

Table 5 — Glycol Freezing Points

% GLYCOL	FREEZE POINT (° F)	
	Ethylene Glycol	Propylene Glycol
20	18	19
30	7	9
40	–7	–5
50	–28	–27

All manual flow valves used in the system should be of the ball valve design. Globe or gate valves must not be used due to high pressure drops and poor throttling characteristics.

Do not exceed recommended condenser fluid flow rates shown in Fig. 17. Serious damage or erosion of the heat exchanger tubes could occur. Piping systems should not exceed 10 fps fluid velocities to ensure quietness and tube wall integrity. Refer to Fig. 17 for condenser water pressure drop versus flow rate. Flow rates outside of the published range should not be used.

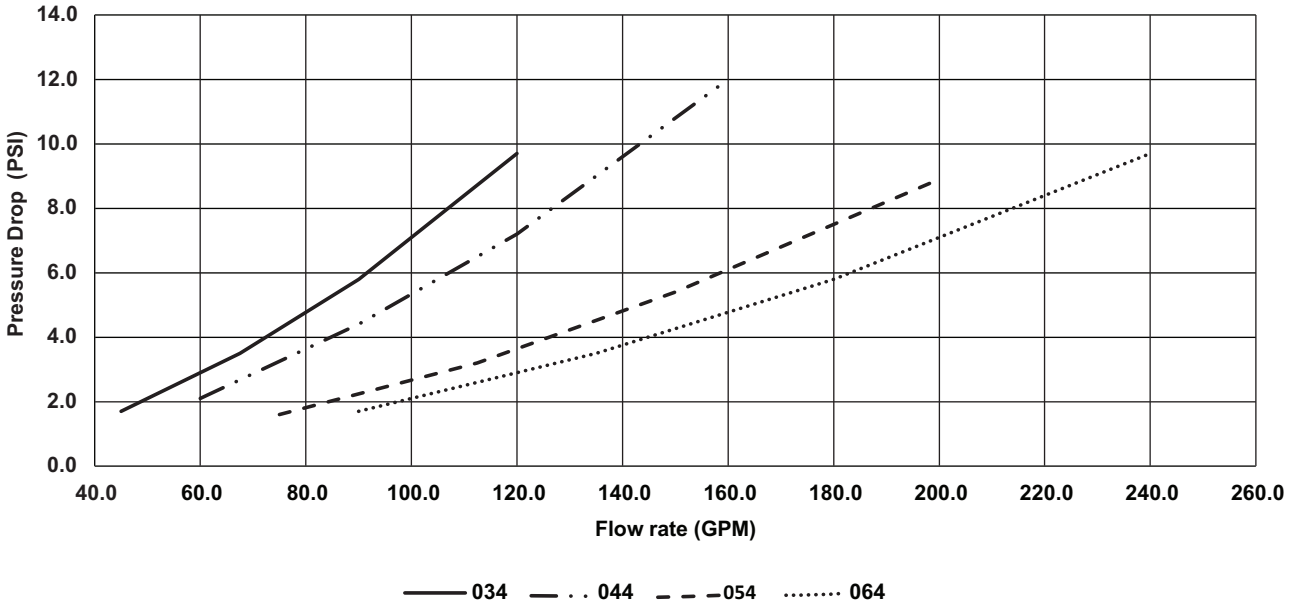

Fig. 17 — Condenser Water Pressure Drop Curve

Ball valves should be installed in the supply and return lines for unit isolation and water flow balancing.

Pressure and temperature ports are recommended in both the supply and return lines for system flow balancing. These openings should be 5 to 10 pipe diameters from the unit water connections. For thorough mixing and temperature stabilization, wells in the water piping should extend at least 1/2 pipe diameter into the pipe. Measure the condenser waterside pressure drop and refer to Fig. 17 for help to properly set the water flow rate.

Improper fluid flow due to valving, piping, or improper pump operation constitutes abuse that may result in voiding of unit warranty. The manufacturer will not be responsible for damages or failures resulting from improper piping design or piping material selection.

WATER QUALITY GUIDELINES

Units are supplied with either a copper or optional cupronickel coaxial water coil. Copper is adequate for ground water that is not high in mineral content. Carrier recommends proper testing to assure the well water quality is suitable for use with water source equipment. In conditions anticipating moderate scale formation or in brackish water a cupronickel heat exchanger is recommended. Additional considerations:

- A secondary heat exchanger (plate frame between the unit and the open cooling tower or open loop ground water system) may also be used. It is imperative that all air is eliminated from the closed loop side of the heat exchanger to prevent condenser fouling.
- In all applications, the quality of the water circulated through the heat exchanger must fall within the ranges listed in Table 6, Water Quality Guidelines. Consult a local water treatment firm, independent testing facility, or local water authority for specific recommendations to maintain water quality within the published limits.

⚠ CAUTION

Water piping exposed to extreme, low ambient temperatures is subject to freezing.

Table 6 — Water Quality Guidelines

CONDITION	HX MATERIAL[a]	CLOSED RECIRCULATING[b]	OPEN LOOP AND RECIRCULATING WELL[c]		
Scaling Potential — Primary Measurement **Above the given limits, scaling is likely to occur. Scaling indexes should be calculated using the limits below.**					
pH/Calcium Hardness Method	All	N/A	pH < 7.5 and Ca Hardness, <100 ppm		
Index Limits for Probable Scaling Situations (Operation outside these limits is not recommended.)					
Scaling indexes should be calculated at 150°F for direct use and at 90°F for indirect HX use. A monitoring plan should be implemented.					
Ryznar Stability Index	All	N/A	6.0 to 7.5 If >7.5 minimize steel pipe use.		
Langelier Saturation Index	All	N/A	–0.5 to +0.5 If <=0.5 minimize steel pipe use. Based upon 150°F direct well, 85°F indirect well HX.		
Iron Fouling					
Iron Fe^{2+} (Ferrous) (Bacterial Iron Potential)	All	N/A	<0.2 ppm (Ferrous) If Fe^{2+} (ferrous) >0.2 ppm with pH 6 to 8, O_2<5 ppm, check for iron bacteria.		
Iron Fouling	All	N/A	<0.5 ppm of Oxygen Above this level deposition will occur.		
Corrosion Prevention[d]					
pH	All	6 to 8.5 Monitor/treat as needed.	6 to 8.5 Minimize steel pipe below 7 and no open tanks with pH <8.		
Hydrogen Sulfide (H_2S)	All	N/A	<0.5 ppm At H_2S>0.2 ppm, avoid use of copper and cupronickel piping or HXs. Rotten egg smell appears at 0.5 ppm level. Copper alloy (bronze or brass) cast components are acceptable to <0.5 ppm.		
Ammonia Ion as Hydroxide, Chloride, Nitrate and Sulfate Compounds	All	N/A	<0.5 ppm		
Maximum Chloride Levels			Maximum allowable at maximum water temperature.		
			50°F (10°C)	75°F (24°C)	100°F (38°C)
	Copper	N/A	<20 ppm	NR	NR
	Cupronickel	N/A	<150 ppm	NR	NR
	304 SS	N/A	<400 ppm	<250 ppm	<150 ppm
	316 SS	N/A	<1000 ppm	<550 ppm	<375 ppm
	Titanium	N/A	>1000 ppm	>550 ppm	>375 ppm
Erosion and Clogging					
Particulate Size and Erosion	All	<10 ppm of particles and a maximum velocity of 6 fps. Filtered for maximum 800 micron size.	<10 ppm (<1 ppm "sandfree" for reinjection) of particles and a maximum velocity of 6 fps. Filtered for maximum 800 micron size. Any particulate that is not removed can potentially clog components.		
Brackish	All	N/A	Use cupronickel heat exchanger when concentrations of calcium or sodium chloride are greater than 125 ppm are present. (Seawater is approximately 25,000 ppm.)		

NOTE(S):

a. Heat exchanger materials considered are copper, cupronickel, 304 SS (stainless steel), 316 SS, titanium.
b. Closed recirculating system is identified by a closed pressurized piping system.
c. Recirculating open wells should observe the open recirculating design considerations.
d. If the concentration of these corrosives exceeds the maximum allowable level, then the potential for serious corrosion problems exists.
Sulfides in the water quickly oxidize when exposed to air, requiring that no agitation occur as the sample is taken. Unless tested immediately at the site, the sample will require stabilization with a few drops of one Molar zinc acetate solution, allowing accurate sulfide determination up to 24 hours after sampling. A low pH and high alkalinity cause system problems, even when both values are within ranges shown. The term pH refers to the acidity, basicity, or neutrality of the water supply. Below 7.0, the water is considered to be acidic. Above 7.0, water is considered to be basic. Neutral water registers a pH of 7.0.
To convert ppm to grains per gallon, divide by 17. Hardness in mg/l is equivalent to ppm.

LEGEND

HX — Heat Exchanger
N/A — Design Limits Not Applicable Considering Recirculating Potable Water
NR — Application Not Recommended
SS — Stainless Steel

EVAPORATOR CONDENSATE DRAIN

The condensate drain connection is 1-1/4 in. FPT and is located on the same side of the unit as the condenser water connections. See dimensional drawings (Fig. 7-14) for exact location.

Drain lines should be pitched away from the unit with a minimum slope of 1/8 in. per foot and conform to all local and national codes.

A trap must be installed in the condensate line to ensure free condensate flow (units are not internally trapped). A vertical air vent is sometimes required to avoid air pockets.

Install a condensate-trapping drain line at the unit's drain connection. See Fig. 18 for correct drain layout.

When calculating trap depth, remember that it is not the total static pressure but the upstream or downstream static resistance that is trapped against. For instance, when calculating the trap depth for a cooling coil condensate pan, trap against the coil pressure drop in that coil section and any other pressure drops upstream of it.

If calculating the trap depth for the cooling coil, use the total static pressure drop (coil plus any other components upstream of it) plus 1 in. (P_1 = negative static pressure + 1 in.), as shown in Fig. 18.

Traps must store enough condensate to prevent losing the drain seal at start-up. The "Minimum 1/2 P_1" dimension ensures that enough condensate is stored.

Drain pans should be cleaned periodically to avoid the build-up of dirt and bacterial growth.

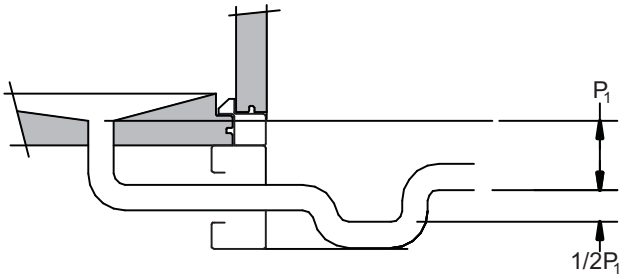

NOTE: P_1 equals negative static pressure plus 1 in.

Fig. 18 — Condensate Drain Layout

HOT WATER HEATING COIL (OPTIONAL)

A factory-installed 1 or 2-row hot water heating coil is available as an option. The coil is supplied with hot water from a boiler through separate piping from the condenser water loop. On CV units all controls, including the hot water valve, freeze protection, and the valve control signal, for heating operation are field-supplied. On VAV units equipped with the factory-installed controller, a hot water valve is provided in the field.

Piping should be in accordance with accepted industry standards and all components rated for the system pressure expected. Pipe coils so that they will drain, and provide a drain and vent.

Always connect the supply to the bottom of the coil, and the return to the top of the coil. Refer to Fig. 7-14 for hot water supply and return piping locations.

Water coils should not be subjected to entering-air temperatures below 38°F to prevent coil freeze-up. If air temperatures across the coil are going to be below this value, use a glycol or brine solution. Use a solution with the lowest concentration that will match the coldest air expected. Excess concentrations will greatly reduce coil capacity. A coil freeze protection system that shuts off the supply fan and opens the hot water valve to 100% should also be considered.

The return air duct system should be carefully designed to get adequate mixing of the return air and outdoor air streams to prevent cold spots on the coil that could freeze.

A 2 or 3-way, field-supplied modulating control valve or a simple two-position on-off valve may be used to control water flow. Select the valve based on the control valve manufacturer's recommendations for size and temperature rating. Select the control valve CV based on pressure drop and flow rate through the coil. This information is available from the NG Builder selection tool.

Pipe sizes should be selected based on the head pressure available from the pump. Water velocity should not exceed 8 fps. Design the piping system for approximately 3 ft of loss per 100 equivalent ft of pipe. The piping system should allow for expansion and minimize vibration between the unit and piping system.

WATERSIDE ECONOMIZER (OPTIONAL)

The optional waterside economizer (pre-cooling coil) is factory-installed and piped internally, in series with the condenser water circuit (Fig. 19). A diverting valve and factory controls are included with the option. The condenser water supply is connected to the economizer water in and the condenser water return is connected to the condenser water out. In addition, when unit is shipped with economizer option, the economizer drain must be connected to a separate trap. Follow the same steps for the economizer drain as described for evaporator condensate drain. An Aquastat is used to modulate water flow through the economizer. The controller is mounted to the low voltage control box. Electrical connections are factory-installed and wired. The remote bulb is shipped internal to the unit and requires field mounting. Care should be taken not to dent the bulb or mis-calibration may occur. The Aquastat has a temperature range adjustment (–30 to 100°F) and is field set. See Fig. 7-14 for connection locations and sizes. See unit report from NG Builder or economizer waterside pressure drop data.

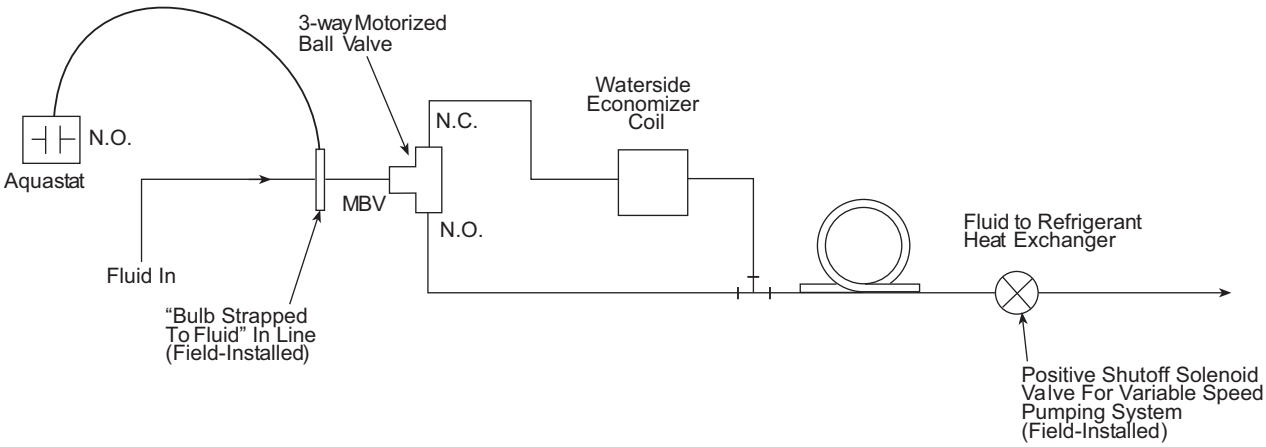

Fig. 19 — Optional Water Economizer

Step 6 — Complete Electrical Connections

Verify that electrical requirements listed on the unit nameplate match available power supply. The unit voltage must be within the range shown in Table 7 and phases must be balanced within 2%. Contact the local power company for line voltage corrections. Never operate a motor where a phase imbalance in supply voltage is greater than 2%.

For an unbalanced 3-phase supply voltage, use the following formula to determine the percent of voltage imbalance:

Percent Voltage Imbalance

$$= 100 \times \frac{\text{max voltage deviation from average voltage}}{\text{average voltage}}$$

Example: Supply voltage is 460-3-60.

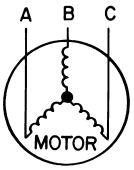

AB = 452-v
BC = 464-v
AC = 455-v

$$\text{Average Voltage} = \frac{452 + 464 + 455}{3}$$

$$= \frac{1371}{3}$$

$$= 457$$

Determine maximum deviation from average voltage:

(AB) 457 – 452 = 5-v
(BC) 464 – 457 = 7-v
(AC) 457 – 455 = 2-v

Maximum deviation is 7-v.

Determine percent of voltage imbalance:

$$\% \text{ Voltage Imbalance} = 100 \times \frac{7}{457}$$

$$= 1.53\%$$

This amount of phase imbalance is satisfactory as it is below the maximum allowable 2%.

IMPORTANT: If supply voltage phase imbalance is more than 2%, contact the local electric utility company immediately.

Table 7 — Electrical Data — with Belt Drive Motor, Inverter Duty (50BVV,W,T)[a]

50BV UNIT SIZE	RATED VOLTAGE	VOLTAGE MIN/MAX	COMPRESSOR			BLOWER MOTOR			TOTAL UNIT W/ BELT DRIVE MOTOR		
			Qty	RLA (each)	LRA (each)	Hp (each)	Qty	FLA (each)	Total Unit FLA	MCA	MOCP
034	208-230/3/60	197/253	2	54.6	386.3	7.5	1	21.2	130.4	144.1	175
			2	54.6	386.3	10.0	1	27.7	136.9	150.6	200
			2	54.6	386.3	15.0	1	40.5	149.7	163.4	200
			2	54.6	386.3	20.0	1	53.0	162.2	175.9	225
	460/3/60	414/506	2	26.7	182.0	7.5	1	9.9	63.3	70.0	90
			2	26.7	182.0	10.0	1	12.7	66.1	72.8	90
			2	26.7	182.0	15.0	1	18.8	72.2	78.9	100
			2	26.7	182.0	2.0	1	24.3	77.7	84.4	110
	575/3/60	518/632	2	21.4	131.0	7.5	1	7.9	50.7	56.1	70
			2	21.4	131.0	10.0	1	10.3	53.1	58.5	70
			2	21.4	131.0	15.0	1	15.1	57.9	63.3	80
			2	21.4	131.0	20.0	1	19.5	62.3	67.7	80
044	208-230/3/60	197/253	4	37.1	255.0	7.5	2	21.2	190.8	200.1	225
			4	37.1	255.0	10.0	2	27.7	203.8	213.1	250
			4	37.1	255.0	15.0	2	40.5	229.4	239.5	250
			4	37.1	255.0	20.0	2	53.0	254.4	267.7	300
	460/3/60	414/506	4	17.1	140.0	7.5	2	9.9	88.2	92.5	100
			4	17.1	140.0	10.0	2	12.7	93.8	98.1	110
			4	17.1	140.0	15.0	2	18.8	106	110.7	125
			4	17.1	140.0	20.0	2	24.3	117	123.1	125
	575/3/60	518/632	4	14.4	107.6	7.5	2	7.9	73.4	77.0	90
			4	14.4	107.6	10.0	2	10.3	78.2	81.8	90
			4	14.4	107.6	15.0	2	15.1	87.8	91.6	100
			4	14.4	107.6	20.0	2	19.5	96.6	101.5	110
054	208-230/3/60	197/253	4	45.4	270.0	7.5	2	21.2	224	235.4	250
			4	45.4	270.0	10.0	2	27.7	237	248.4	250
			4	45.4	270.0	15.0	2	40.5	262.6	274.0	300
			4	45.4	270.0	20.0	2	53.0	287.6	300.9	350
	460/3/60	414/506	4	21.6	147.0	7.5	2	9.9	106.2	111.6	125
			4	21.6	147.0	10.0	2	12.7	111.8	117.2	125
			4	21.6	147.0	15.0	2	18.8	124	129.4	150
			4	21.6	147.0	20.0	2	24.3	135	141.1	150
	575/3/60	518/632	4	15.3	109.0	7.5	2	7.9	77	80.8	90
			4	15.3	109.0	10.0	2	10.3	81.8	85.6	100
			4	15.3	109.0	15.0	2	15.1	91.4	95.2	110
			4	15.3	109.0	20.0	2	19.5	100.2	105.1	110

Table 7 — Electrical Data — with Belt Drive Motor, Inverter Duty (50BVV,W,T)[a](cont)

50BV UNIT SIZE	RATED VOLTAGE	VOLTAGE MIN/MAX	COMPRESSOR			BLOWER MOTOR			TOTAL UNIT W/ BELT DRIVE MOTOR		
			Qty	RLA (each)	LRA (each)	Hp (each)	Qty	FLA (each)	Total Unit FLA	MCA	MOCP
064	208-230/3/60	197/253	4	54.6	386.3	7.5	2	21.2	260.8	274.5	300
			4	54.6	386.3	10.0	2	27.7	273.8	287.5	300
			4	54.6	386.3	15.0	2	40.5	299.4	313.1	350
			4	54.6	386.3	20.0	2	53.0	324.4	338.1	350
	460/3/60	414/506	4	26.7	182.0	7.5	2	9.9	126.6	133.3	150
			4	26.7	182.0	10.0	2	12.7	132.2	138.9	150
			4	26.7	182.0	15.0	2	18.8	144.4	151.1	175
			4	26.7	182.0	20.0	2	24.3	155.4	162.1	175
	575/3/60	518/632	4	21.4	131.0	7.5	2	7.9	101.4	106.8	125
			4	21.4	131.0	10.0	2	10.3	106.2	111.6	125
			4	21.4	131.0	15.0	2	15.1	115.8	121.2	125
			4	21.4	131.0	20.0	2	19.5	124.6	130.0	150

NOTE(S):

a. The presence of an inverter duty motor does not guarantee that the unit will be provided with a VFD; only 50BVW (VAV) units are provided with a VFD as standard.

LEGEND
FLA — Full Load Amps
HP — Horsepower
LRA — Locked Rotor Amps
MCA — Minimum Circuit Amps
MOCP — Maximum Overcurrent Protection
RLA — Rated Load Amps

POWER WIRING

Properly sized fuses or HACR (Heating, Air-Conditioning and Refrigeration) circuit breakers must be installed for branch circuit protection, according to the national and applicable local codes. See unit nameplate and Table 7 for maximum overcurrent protection size.

These units are provided with single point, main power supply terminal blocks. Refer to Fig. 7-14 for conduit connection locations. See Fig. 21-32 for typical wiring connections. Connect the power leads as indicated on the unit wiring diagrams (found in the Troubleshooting section) and be certain to connect the ground lead to the ground lug in the unit high voltage electrical box. Refer to Table 7 for unit electrical data.

CONTROL TRANSFORMER

50BV034 include a 100VA transformer, and sizes 044-064 include a quantity (2) 100VA transformers. Table 8 shows the VA draw of factory mounted components in the low voltage heat pump. The total VA draw of the heat pump internal components plus any attached accessories must be lower than the VA capacity of the unit control transformer.

Transformer Settings for 208/230-v Units

Default from the factory, all 208/230-v units are wired for 230-v operation. For jobsites with a 208-v power supply, the primary leads on the unit transformer will need to be changed from 230-v to 208-v. Refer to the unit wiring diagrams on starting on page 30 for details.

Table 8 — Low Voltage VA Draw[a]

50BV034	VA
STANDARD COMPONENTS	
Reversing Valve Solenoid 1[a]	12
Reversing Valve Solenoid 2[a]	12
Compressor Contactor 1	10
Compressor Contactor 2	10
Blower Contactor	10
UPM board 1st Stage	5
UPM board 2nd Stage	5
TOTAL VA DRAW	64
REFRIGERANT OPTIONS	
Hot Gas Reheat Solenoid 1	9
Hot Gas Reheat Solenoid 2	9
Modulationg Reheat Valve 1	3
Modulationg Reheat Valve 2	3
Economizer Valve	7
ELECTRICAL OPTIONS	
DDC	26
Reversing Valve Relay	10
Aux Relay	10
Hot Gas Reheat Relay 1	4
Hot Gas Reheat Relay 2	4
Economizer Relay	4
Cooling Relay	4
Heating Relay	4
Compressor Monitor Relay 1	4
Compressor Monitor Relay 2	4
Energy Management Relay	4
Blower Monitor Relay	4
DDC Expander	13
A2L Mitigation Relay	4

NOTE(S):

a. Provided only with 50BVV heat pump units.

Table 8 — Low Voltage VA Draw (cont)[a]

50BV044-064	VA
STANDARD COMPONENTS	
Reversing Valve Solenoid 1[a]	12
Reversing Valve Solenoid 2[a]	12
Reversing Valve Solenoid 3[a]	12
Reversing Valve Solenoid 4[a]	12
Compressor Contactor 1	10
Compressor Contactor 2	10
Compressor Contactor 3	10
Compressor Contactor 4	10
Blower Contactor 1	10
Blower Contactor 2	10
UPM board 1st Stage	5
UPM board 2nd Stage	5
UPM board 3rd Stage	5
UPM board 4th Stage	5
Cross Functional Mitigation Relay 1	4
Cross Functional Mitigation Relay 2	4
Total VA Draw	136
REFRIGERANT OPTIONS	
Hot Gas Reheat Solenoid 1	9
Hot Gas Reheat Solenoid 2	9
Hot Gas Reheat Solenoid 3	9
Hot Gas Reheat Solenoid 4	9
Modulationg Reheat Valve 1	3
Modulationg Reheat Valve 2	3
Modulationg Reheat Valve 3	3
Modulationg Reheat Valve 4	3
Economizer Valve	7
ELECTRICAL OPTIONS	
DDC	26
Aux Relay	10
Reversing Valve Relay 1	10
Reversing Valve Relay 2	10
Compressor Monitor Relay 1	4
Compressor Monitor Relay 2	4
Compressor Monitor Relay 3	4
Compressor Monitor Relay 4	4
Blower Monitor Relay 1	4
Blower Monitor Relay 2	4
Energy Management Relay 1	4
Energy Management Relay 2	4
A2L Mitigation Relay 1	4
A2L Mitigation Relay 2	4
DDC Expander	13
Hot Gas Reheat Relay 1	4
Hot Gas Reheat Relay 2	4
Hot Gas Reheat Relay 3	4
Hot Gas Reheat Relay 4	4
Heating Relay 1	4
Heating Relay 2	4
Cooling Relay 1	4
Cooling Relay 2	4
Economizer Relay	4
Start/Stop Relay	4

NOTE(S):

a. Provided only with 50BVV heat pump units.

⚠ CAUTION

Exceeding the transformer capacity can result in low control voltage, erratic unit operation or damage to the heat pump.

Modular Units

For units with multiple main air-conditioning sections, connect the high voltage compressor power wiring to the line side of the high voltage terminal block in the second section's high voltage electrical box. This wiring is located in the upper portion of the compressor compartment.

Connect the low voltage wiring, located in the compressor compartment, between the two air-conditioning sections using the quick connects provided.

For the supply fan motor, connect the 3-phase high voltage wiring, coiled behind the high voltage panel, to the line side of the supply fan motor terminal block located in the fan compartment. For VAV units, connect the 3-phase high voltage wiring to the line side of VFD.

For units with multiple fans, connect the control power wiring with the quick connects provided at the fan compartment junction.

CONTROL WIRING (CV ONLY)

A standard commercial thermostat controls constant volume units. These units turn compressors on or off in response to zone temperature. The 50BV034 unit provides 2 stages of cooling. See Fig. 21 for typical thermostat wiring.

50BVT,V 034 Only

This model has 2 independent refrigerant circuits, each capable of being staged independently. Thermostat wiring is connected to the 6-position low voltage terminal block located in the unit electrical box. The 50BV units have a 24 vac control transformer, which provides power to the control circuit and to the thermostat. The thermostat connections and their functions are as follows:

C — Transformer 24 vac (common)

O — Reversing Valve (heat pumps only)

Y1 — 1st Stage Compressor Contactor

Y2 — 2nd Stage Compressor Contactor

R — Transformer 24 vac (hot)

G — Indoor Fan Contactor

H — Dehumidification (on/off HGRH only)

Select an appropriate commercial thermostat that has 2 stages of cooling control. If the unit is a heat pump, make sure the thermostat is capable of heat pump control.

Install the thermostat in the space where the temperature is being controlled, according to the instructions provided with the thermostat.

⚠ WARNING

Before wiring the thermostat to the unit, make sure that main power to the unit has been disconnected. Failure to heed this warning could result in personal injury.

To wire the thermostat:

1. Connect the 'C' terminal from the 50BV unit to the 'C' terminal on the thermostat.
2. Wire the 'Y1' and 'Y2' terminals from the 50BV unit to the 'Y1' and 'Y2' terminals, respectively, at the thermostat.
3. Make a connection between the 'G' terminal on the unit and the 'G' terminal on the thermostat.
4. Attach a wire from the 'R' terminal at the unit to the 'R' terminal at the thermostat.
5. 50BVV ONLY: If the unit is a heat pump, connect a final wire from terminal 'O' on the heat pump unit to the 'W1/O/B' terminal at the thermostat. Configure the thermostat for heat pump operation using the installation instructions provided with the thermostat. Set the reversing valve polarity of the thermostat to 'O'.
6. For units with cycling (on/off) HGRH, connect the thermostat H output to the H terminal on the 50BV. Set up the thermostat to provide an H output only, as the unit will automatically enable the Y1 and O terminals when there is a call for H (dehumidification).

See Fig. 20 for typical thermostat wiring for sizes 034.

50BVT,V044-064 Only

Unit sizes 044-064 have four independent refrigerant circuits. These units can be controlled using a standard commercial, 2-stage thermostat. In this case, the first stage of cooling will turn on compressors 1 and 2, and the second stage will turn on compressors 3 and 4. It is also possible to have 4 stages of cooling, using a suitable field-supplied control method.

For 2-stage thermostat wiring, refer to Fig. 21. Jumpers must be installed between the G and O terminals in Modules A and B. A field-supplied, 24-v pilot relay should be used to energize Y2 on Module B whenever Y1 is energized on Module A. Similarly, a field-supplied 24-v pilot relay should be installed to energize Y4 on Module B whenever Y3 on Module A is energized (Y2 stage of thermostat calls for cooling).

Finally, verify that transformer phasing is consistent between Modules A and B.

HOT GAS REHEAT CONTROL (OPTIONAL)

On/Off HGRH

Units with on/off hot gas reheat (HGRH) will include an additional H terminal on the input terminal board for dehumidification control. To enable a call for dehumidification, a 24-v signal must be sent to the H terminal with no voltage applied to the Y1 or O terminals. Any call for cooling (Y1 and O) will override the dehumidification call.

Modulating HGRH

Constant Volume units with modulating HGRH will require a field supplied controller capable of controlling the MHGRH valve via a 0-10 vdc signal.

ENERGY MANAGEMENT SWITCH (OPTIONAL)

Units with the energy management switch (EMS) relay can be field wired to disable unit operation when a 24-v signal is removed from a factory-installed normally open relay. Removing the 24-v signal causes the relay to open, which cuts 24-v power to the unit control circuit. All unit components will be disabled when the EMS is deactivated.

ALARM OUTPUT (ALL UNITS)

If the unit is being connected to a thermostat or DDC control with an alarm indicator, this connection is made at the unit malfunction output on the Unit Protection Module (UPM). See the Unit Protection Module heading in the Set Up Unit Controls section for further details.

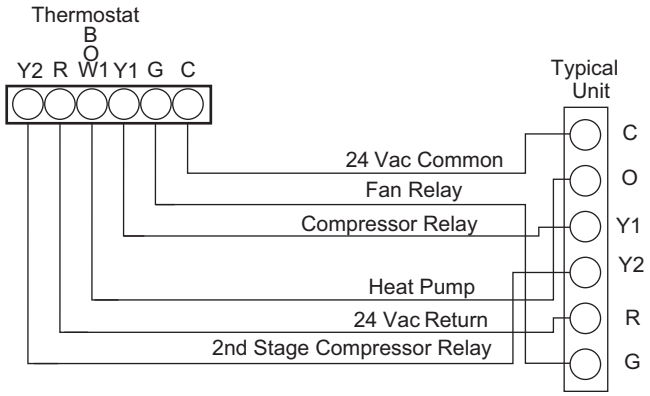

Fig. 20 — Typical Wiring Unit Sizes 034 (Two-Stage Cooling Unit)

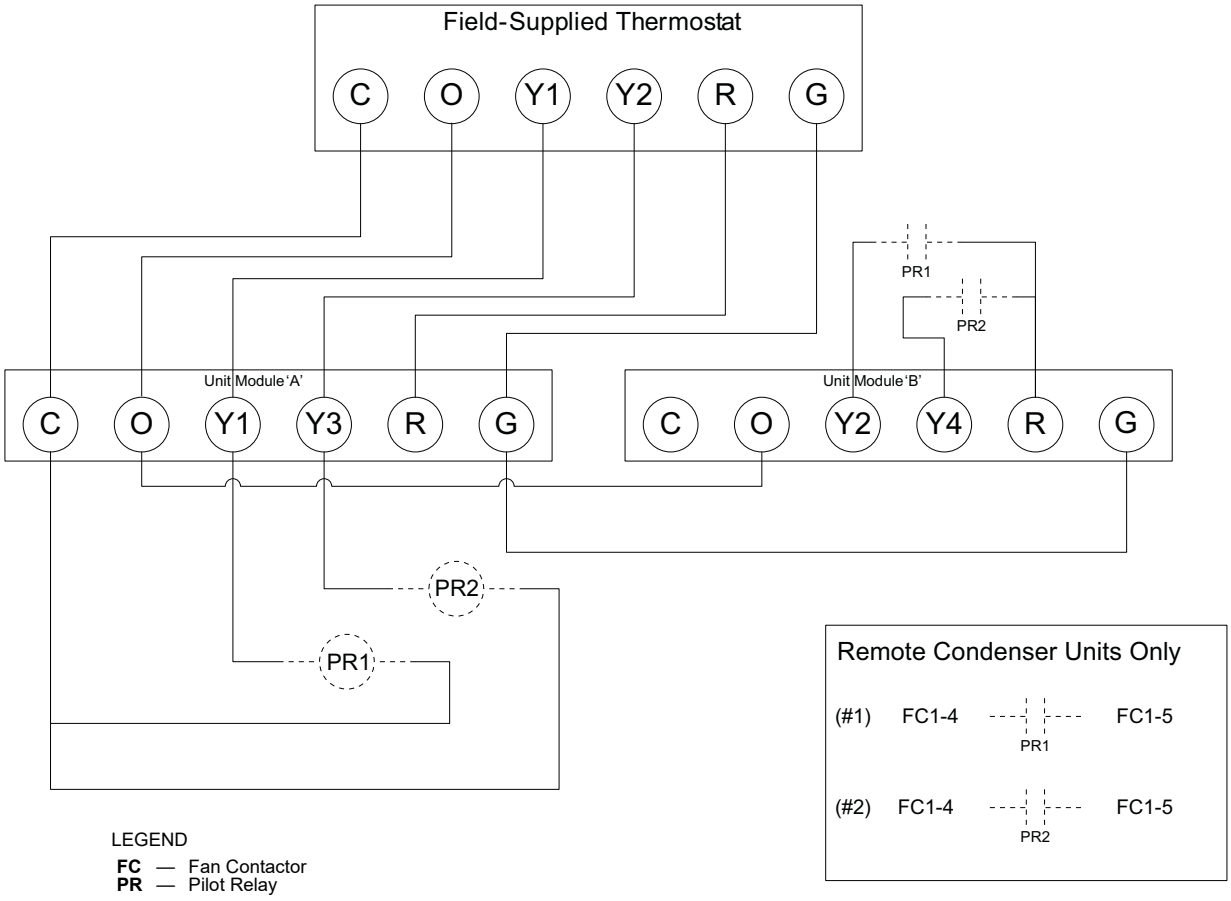

Fig. 21 — Typical Wiring 40 to 60 Ton Units (Two-Stage Cooling)

STATUS LED/ALARM BLINK CODES	
1	HIGH PRESSURE FAULT – CKT 1
2	LOW PRESSURE FAULT – CKT 1
3	HIGH PRESSURE FAULT – CKT 2
4	LOW PRESSURE FAULT – CKT 2
5	FREEZE SENSOR 1 FAULT
6	CONDENSATE FAULT
7	BROWN OUT FAULT
8	FREEZE SENSOR 2 FAULT
9	FREEZE SENSOR 3 FAULT
10	FREEZE SENSOR 4 FAULT
11	REFRIGERANT LEAK FAULT
12	2ND STAGE COMMUNICATION FAULT

COLOR CHART LEGEND	
ABBREVIATION	COLOR
BK	BLACK
BL	BLUE
BN	BROWN
GY	GRAY
GN	GREEN
OG	ORANGE
RD	RED
VT	VIOLET
WT	WHITE
YL	YELLOW

FACTORY WIRE ————

FIELD WIRE — — —

STANDARD COMPONENTS LEGEND:

#1 - FIRST STAGE
#2 - SECOND STAGE
A2L - AIR TO LIQUID REFRIGERANT LEAK SENSOR
BM - BLOWER MOTOR
BR - BLOWER RELAY
CC - COMPRESSOR CONTACTOR
CBR - 24VAC CIRCUIT BREAKER
CS - CONDENSATE SENSOR (1 PER DRAIN PAN)
FB - FUSE BLOCK (COMPRESSORS)
FS - FREEZE SENSOR
HPS - HIGH PRESSURE SWITCH
LPS - LOW PRESSURE SWITCH
MS - MOTOR STARTER
RVR - REVERSING VALVE RELAY (HEAT PUMPS ONLY)
TB1 - TERMINAL BLOCK (HIGH VOLTAGE)

OPTIONAL COMPONENTS LEGEND:

[ ] CCH - CRANKCASE HEATER
[ ] CPM - COMPRESSOR PROTECTION MODULE (15 TON AND LARGER COMPRESSORS)
[ ] EMS - ENERGY MGMT SYSTEM RELAY
[ ] HSL - HIGH TEMPERATURE SUCTION LIMIT (WITH HGBP ONLY)

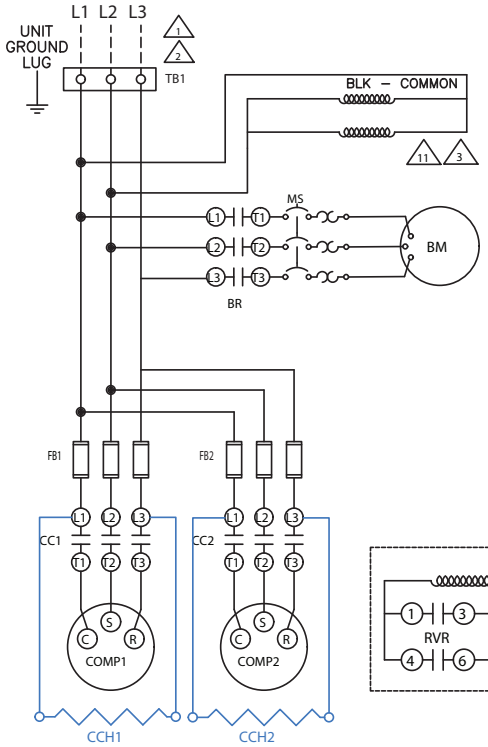

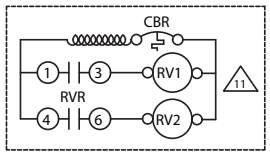

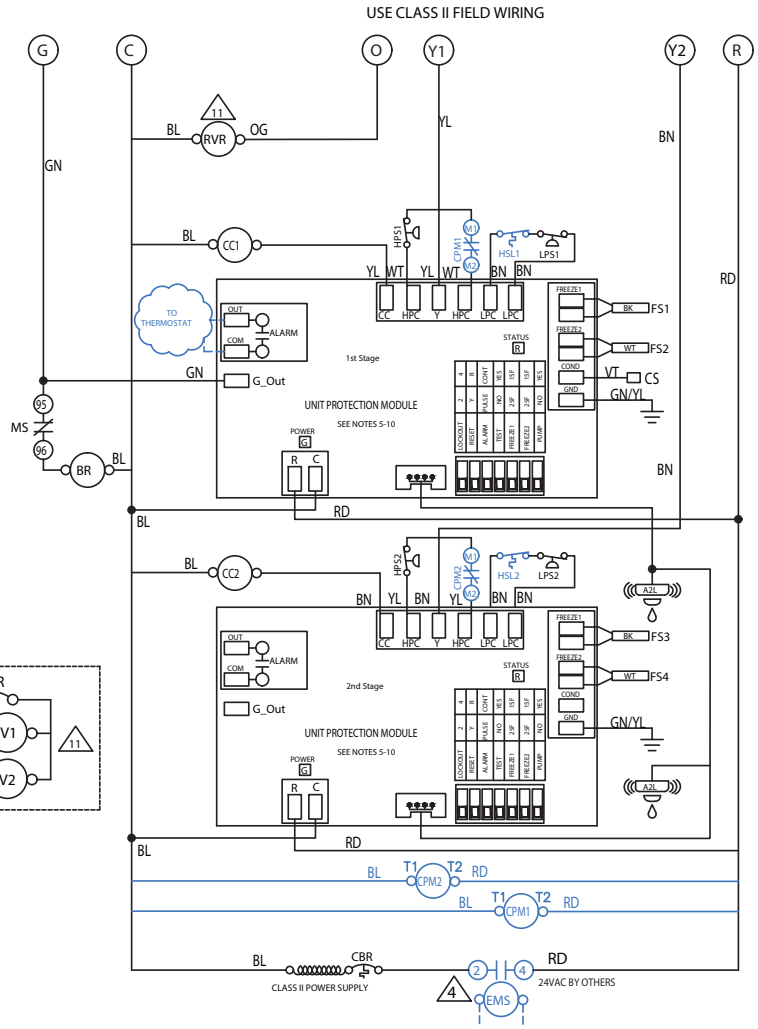

8 733 838 255 REV 4

NOTES :

1. SEE UNIT NAME PLATE FOR ELECTRICAL RATING
2. ALL FIELD WIRING MUST BE IN ACCORDANCE WITH N.E.C.-N.F.P.A. #70, COPPER CONDUCTORS ONLY. CONDUCTEURS EN CUIVRE SEULEMENT.
3. 208/230V UNITS ARE FACTORY WIRED FOR 230V OPERATION. FOR 208V OPERATION, REMOVE 240V LEAD AND CONNECT IT TO 208V. CAP ALL UNUSED LEADS.
4. FOR ALTERNATE EMS COIL VOLTAGES CONSULT FACTORY.
5. UPM-I INCLUDES BUILT IN: 270-300 SECOND RANDOM START
   300 SECOND DELAY ON BREAK
   120 SECOND LOW PRESSURE BYPASS
   120 SECOND FREEZE PROTECTION BYPASS
6. "TEST" DIP SWITCH REDUCES DELAYS TO 10 SEC WHEN SET TO YES. MUST BE SET TO "NO" FOR NORMAL OPERATION.
7. "FREEZE SENSOR" ON CONDENSER WILL OPERATE AT 25°F BY DEFAULT. IF 15°F OPERATION IS REQUIRED, MOVE DIP SWITCH SLIDER TO THE 15°F POSITION.
8. "ALARM OUTPUT" DIP SWITCH MUST BE SET TO "PULSE" IF BLINKING T-STAT SERVICE LIGHT IS DESIRED.
9. DEFAULT SETTINGS FOR UPM BOARD FROM FACTORY SHOWN. ALSO SEE INSTALLATION MANUAL.
10. ALARM OUTPUT IS NORMALLY OPEN (NO) DRY CONTACT. IF 24 VAC IS NEEDED, CONNECT R FROM THERMOSTAT TERMINAL BLOCK TO ALR-COM TERMINAL, 24VAC WILL BE SENSED ON THE ALR-OUT WHEN THE UNIT IS IN ALARM CONDITION. OUTPUT WILL BE PULSED IF PULSE IS SELECTED.
11. REVERSING VALVES AND RELAYS ARE NOT PRESENT ON STRAIGHT COOL UNITS, ADDITIONAL TRANSFORMER NOT REQUIRED.

Fig. 22 — 50BVT/V 034 Constant Volume Wiring Diagram

STATUS LED/ALARM BLINK CODES	
1	HIGH PRESSURE FAULT – CKT 1
2	LOW PRESSURE FAULT – CKT 1
3	HIGH PRESSURE FAULT – CKT 2
4	LOW PRESSURE FAULT – CKT 2
5	FREEZE SENSOR 1 FAULT
6	CONDENSATE FAULT
7	BROWN OUT FAULT
8	FREEZE SENSOR 2 FAULT
9	FREEZE SENSOR 3 FAULT
10	FREEZE SENSOR 4 FAULT
11	REFRIGERANT LEAK FAULT
12	2ND STAGE COMMUNICATION FAULT

COLOR CHART LEGEND	
ABBREVIATION	COLOR
BK	BLACK
BL	BLUE
BN	BROWN
GY	GRAY
GN	GREEN
OG	ORANGE
RD	RED
VT	VIOLET
WT	WHITE
YL	YELLOW

FACTORY WIRE ————

FIELD WIRE — — —

STANDARD COMPONENTS LEGEND:

#1 - FIRST STAGE
#2 - SECOND STAGE
A2L - AIR TO LIQUID REFRIGERANT LEAK SENSOR
BM - BLOWER MOTOR
BR - BLOWER RELAY
CBR - 24VAC CIRCUIT BREAKER
CC - COMPRESSOR CONTACTOR
CS - CONDENSATE SENSOR (1 PER DRAIN PAN)
FB - FUSE BLOCK (COMPRESSORS)
FS - FREEZE SENSOR
HPS - HIGH PRESSURE SWITCH
LPS - LOW PRESSURE SWITCH
MS - MOTOR STARTER
RV - REVERSING VALVE (HEAT PUMPS ONLY)
RVR - REVERSING VALVE RELAY (HEAT PUMPS ONLY)
TB1 - TERMINAL BLOCK (HIGH VOLTAGE)

OPTIONAL COMPONENTS LEGEND:

[ ] AQS - AQUASTAT (ECONOMIZER)
[ ] CCH - CRANKCASE HEATER
[ ] CPM - COMPRESSOR PROTECTION MODULE (15 TON AND LARGER COMPRESSORS)
[ ] CR - COOLING/HEATING RELAY
[ ] ER - ECONOMIZER RELAY
[ ] EMS - ENERGY MGMT SYSTEM RELAY
[ ] HGV - HOT GAS SOLENOID VALVE(S)
[ ] HSL - HIGH TEMPERATURE SUCTION LIMIT (WITH HGBP ONLY)
[ ] MBV - MODULATING BALL VALVE
[ ] MRV - MODULATING REHEAT VALVE
[ ] MVR - MODULATING BALL VALVE RELAY
[ ] RH1 - REHEAT RELAY 1
[ ] RH2 - REHEAT RELAY 2

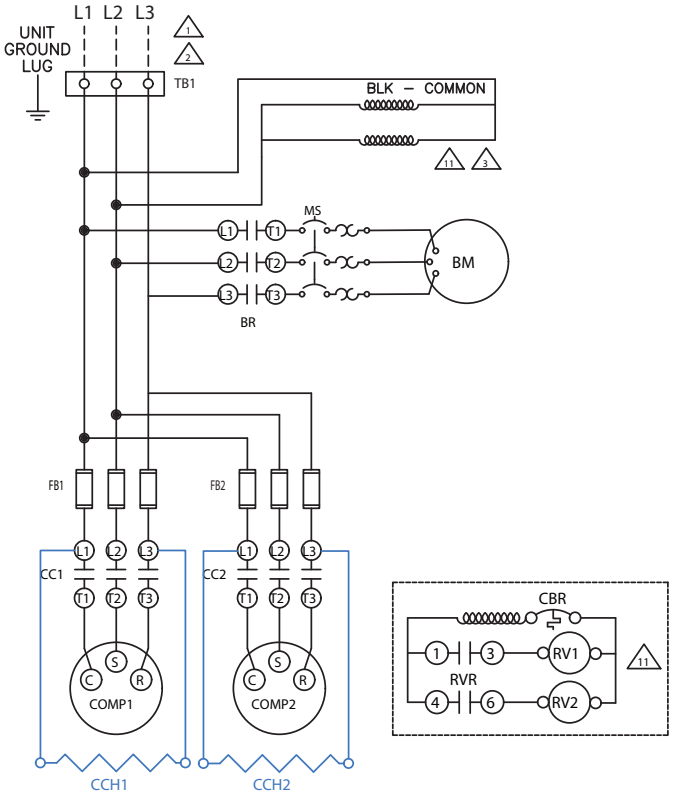

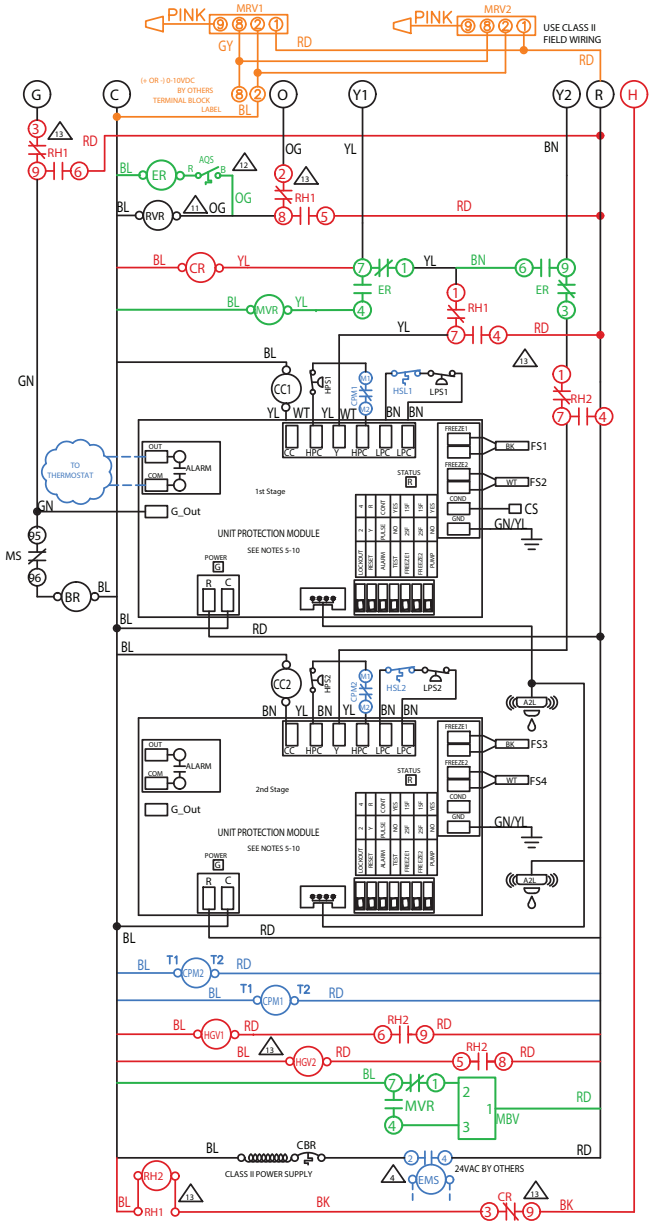

8 733 838 256 REV 4

NOTES :

1. SEE UNIT NAME PLATE FOR ELECTRICAL RATING
2. ALL FIELD WIRING MUST BE IN ACCORDANCE WITH N.E.C.-N.F.P.A. #70, COPPER CONDUCTORS ONLY. CONDUCTEURS EN CUIVRE SEULEMENT.
3. 208/230V UNITS ARE FACTORY WIRED FOR 230V OPERATION. FOR 208V OPERATION, REMOVE 240V LEAD AND CONNECT IT TO 208V. CAP ALL UNUSED LEADS.
4. FOR ALTERNATE EMS COIL VOLTAGES CONSULT FACTORY.
5. UPM-I INCLUDES BUILT IN: 270-300 SECOND RANDOM START
   300 SECOND DELAY ON BREAK
   120 SECOND LOW PRESSURE BYPASS
   120 SECOND FREEZE PROTECTION BYPASS
6. "TEST" DIP SWITCH REDUCES DELAYS TO 10 SEC WHEN SET TO YES. MUST BE SET TO "NO" FOR NORMAL OPERATION.
7. "FREEZE SENSOR" ON CONDENSER WILL BE SET TO 25°F BY DEFAULT. IF 15°F OPERATION IS REQUIRED, MOVE DIP SWITCH SLIDER TO THE 15°F POSITION.
8. "ALARM OUTPUT" DIP SWITCH MUST BE SET TO "PULSE" IF BLINKING T-STAT SERVICE LIGHT IS DESIRED.
9. DEFAULT SETTINGS FOR UPM BOARD FROM FACTORY SHOWN. ALSO SEE INSTALLATION MANUAL.
10. ALARM OUTPUT IS NORMALLY OPEN (NO) DRY CONTACT. IF 24 VAC IS NEEDED, CONNECT R FROM THERMOSTAT TERMINAL BLOCK TO ALR-COM TERMINAL, 24VAC WILL BE SENSED ON THE ALR-OUT WHEN THE UNIT IS IN ALARM CONDITION. OUTPUT WILL BE PULSED IF PULSE IS SELECTED.
11. REVERSING VALVES AND RELAYS ARE NOT PRESENT ON STRAIGHT COOL UNITS, ADDITIONAL TRANSFORMER NOT REQUIRED.
12. AQS CONTACTS R-B CLOSE WHEN ENTERING WATER TEMPERATURE IS BELOW SETPOINT OF AQS.
13. CR AND RH RELAYS ARE NOT PRESENT ON UNITS WITH DDC. H IS CONNECTED DIRECTLY TO HOT GAS VALVES.

Fig. 23 — 50BVT/V 034, Options (Waterside Economizer, Hot Gas Reheat, Modulating Hot Gas Reheat), Constant Volume Wiring Diagram

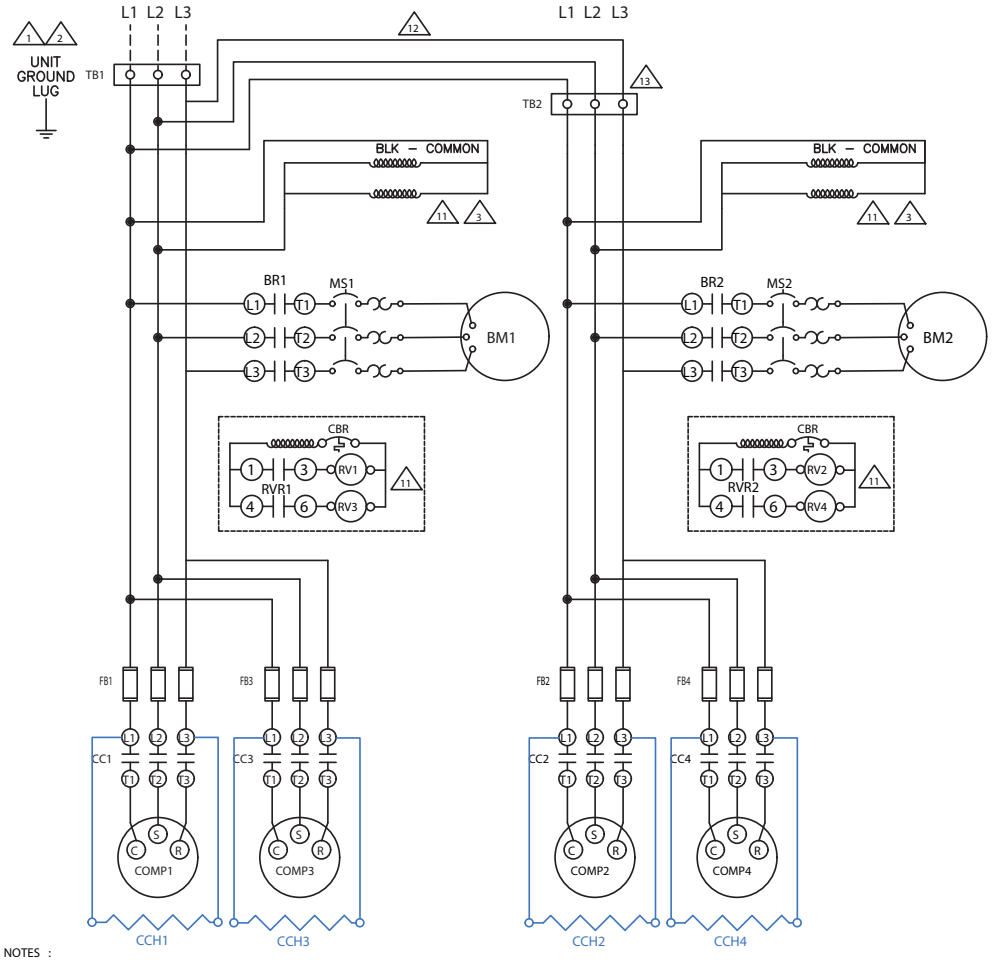

STANDARD COMPONENTS LEGEND:

#1	- FIRST STAGE
#2	- SECOND STAGE
#3	- THIRD STAGE
#4	- FOURTH STAGE
A2L	- AIR TO LIQUID REFRIGERANT LEAK SENSOR
BM	- BLOWER MOTOR
BR	- BLOWER RELAY
CS	- CONDENSATE SENSOR (1 PER DRAIN PAN)
CC	- COMPRESSOR CONTACTOR
CBR	- 24VAC CIRCUIT BREAKER
CFR	- CROSS FUNCTIONAL MITIGATION RELAY (40 TON AND LARGER)
FB	- FUSE BLOCK (COMPRESSORS)
FS	- FREEZE SENSOR
HPS	- HIGH PRESSURE SWITCH
LPS	- LOW PRESSURE SWITCH
MS	- MOTOR STARTER
RV	- REVERSING VALVE (HEAT PUMPS ONLY)
RVR	- REVERSING VALVE RELAY (HEAT PUMPS ONLY)
TB1	- PRIMARY TERMINAL BLOCK (HIGH VOLTAGE)
TB2	- SECONDARY TERMINAL BLOCK (HIGH VOLTAGE)

OPTIONAL COMPONENTS LEGEND:

[ ] CCH	- CRANKCASE HEATER
[ ] CPM	- COMPRESSOR PROTECTION MODULE (15 TON AND LARGER COMPRESSORS)
[ ] EMS	- ENERGY MGMT SYSTEM RELAY
[ ] HSL	- HIGH TEMPERATURE SUCTION LIMIT (WITH HGBP ONLY)

FACTORY WIRE ————

FIELD WIRE — — —

COLOR CHART LEGEND	
ABBREVIATION	COLOR
BK	BLACK
BL	BLUE
BN	BROWN
GY	GRAY
GN	GREEN
OG	ORANGE
RD	RED
VT	VIOLET
WT	WHITE
YL	YELLOW

8 733 838 258 REV 5

NOTES :

1. SEE UNIT NAME PLATE FOR ELECTRICAL RATING
2. ALL FIELD WIRING MUST BE IN ACCORDANCE WITH N.E.C.-N.F.P.A. #70, COPPER CONDUCTORS ONLY. CONDUCTEURS EN CUIVRE SEULEMENT.
3. 208/230V UNITS ARE FACTORY WIRED FOR 230V OPERATION. FOR 208V OPERATION, REMOVE 240V LEAD AND CONNECT IT TO 208V. CAP ALL UNUSED LEADS.
4. FOR ALTERNATE EMS COIL VOLTAGES CONSULT FACTORY.
5. UPM-I INCLUDES BUILT IN:
   270-300 SECOND RANDOM START
   300 SECOND DELAY ON BREAK
   120 SECOND LOW PRESSURE BYPASS
   120 SECOND FREEZE PROTECTION BYPASS
6. "TEST" DIP SWITCH REDUCES DELAYS TO 10 SEC WHEN SET TO YES. MUST BE SET TO "NO" FOR NORMAL OPERATION.
7. "FREEZE SENSOR" ON CONDENSER WILL OPERATE AT 25°F BY DEFAULT. IF 15°F OPERATION IS REQUIRED, MOVE DIP SWITCH SLIDER TO THE 15°F POSITION.
8. "ALARM OUTPUT" DIP SWITCH MUST BE SET TO "PULSE" IF BLINKING T-STAT SERVICE LIGHT IS DESIRED.
9. DEFAULT SETTINGS FOR UPM BOARD FROM FACTORY SHOWN. ALSO SEE INSTALLATION MANUAL.
10. ALARM OUTPUT IS NORMALLY OPEN (NO) DRY CONTACT. IF 24 VAC IS NEEDED, CONNECT R FROM THERMOSTAT TERMINAL BLOCK TO ALR-COM TERMINAL, 24VAC WILL BE SENSED ON THE ALR-OUT WHEN THE UNIT IS IN ALARM CONDITION. OUTPUT WILL BE PULSED IF PULSE IS SELECTED.
11. REVERSING VALVES AND RELAYS ARE NOT PRESENT ON STRAIGHT COOL UNITS. ADDITIONAL TRANSFORMER NOT REQUIRED.
12. WIRE FOR LINE CONNECTION BETWEEN TB1 AND TB2 SUPPLIED BY FACTORY TO BE RECONNECTED IN THE FIELD.
13. WIRE FOR CLASS II VOLTAGE FACTORY SUPPLIED TO BE TERMINATED IN THE FIELD WIRES LABELED A, B, C, D AND E

Fig. 24 — 50BVT/V 044-064, Constant Volume Wiring Diagram

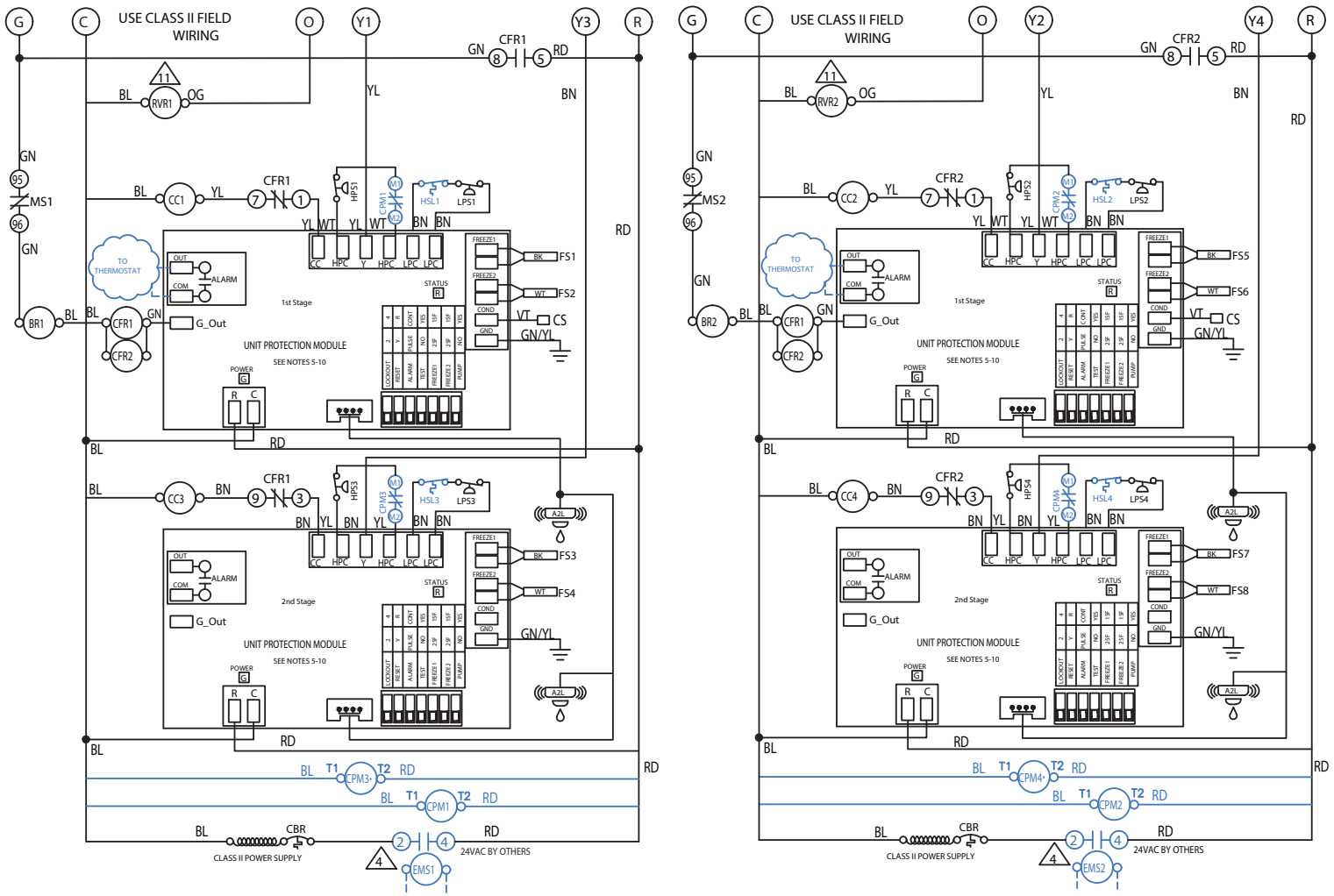

STANDARD COMPONENTS LEGEND:

#1	- FIRST STAGE
#2	- SECOND STAGE
#3	- THIRD STAGE
#4	- FOURTH STAGE
A2L	- AIR TO LIQUID REFRIGERANT LEAK SENSOR
BM	- BLOWER MOTOR
BR	- BLOWER RELAY
CS	- CONDENSATE SENSOR (1 PER DRAIN PAN)
CC	- COMPRESSOR CONTACTOR
CBR	- 24VAC CIRCUIT BREAKER
CFR	- CROSS FUNCTIONAL MITIGATION RELAY (40 TON AND LARGER)
FB	- FUSE BLOCK (COMPRESSORS)
FS	- FREEZE SENSOR
HPS	- HIGH PRESSURE SWITCH
LPS	- LOW PRESSURE SWITCH
MS	- MOTOR STARTER
RV	- REVERSING VALVE (HEAT PUMPS ONLY)
RVR	- REVERSING VALVE RELAY (HEAT PUMPS ONLY)
TB1	- PRIMARY TERMINAL BLOCK (HIGH VOLTAGE)
TB2	- SECONDARY TERMINAL BLOCK (HIGH VOLTAGE)

OPTIONAL COMPONENTS LEGEND:

[ ] CCH	- CRANKCASE HEATER
[ ] CPM	- COMPRESSOR PROTECTION MODULE (15 TON AND LARGER COMPRESSORS)
[ ] EMS	- ENERGY MGMT SYSTEM RELAY
[ ] HSL	- HIGH TEMPERATURE SUCTION LIMIT (WITH HGBP ONLY)

NOTES :

1. SEE UNIT NAME PLATE FOR ELECTRICAL RATING
2. ALL FIELD WIRING MUST BE IN ACCORDANCE WITH N.E.C.-N.F.P.A. #70, COPPER CONDUCTORS ONLY. CONDUCTEURS EN CUIVRE SEULEMENT.
3. 208/230V UNITS ARE FACTORY WIRED FOR 230V OPERATION. FOR 208V OPERATION, REMOVE 240V LEAD AND CONNECT IT TO 208V. CAP ALL UNUSED LEADS.
4. FOR ALTERNATE EMS COIL VOLTAGES CONSULT FACTORY.
5. UPM-I INCLUDES BUILT IN:
   270-300 SECOND RANDOM START
   300 SECOND DELAY ON BREAK
   120 SECOND LOW PRESSURE BYPASS
   120 SECOND FREEZE PROTECTION BYPASS
6. "TEST" DIP SWITCH REDUCES DELAYS TO 10 SEC WHEN SET TO YES. MUST BE SET TO "NO" FOR NORMAL OPERATION.
7. "FREEZE SENSOR" ON CONDENSER WILL OPERATE AT 25°F BY DEFAULT. IF 15°F OPERATION IS REQUIRED, MOVE DIP SWITCH SLIDER TO THE 15°F POSITION.
8. "ALARM OUTPUT" DIP SWITCH MUST BE SET TO "PULSE" IF BLINKING T-STAT SERVICE LIGHT IS DESIRED.
9. DEFAULT SETTINGS FOR UPM BOARD FROM FACTORY SHOWN. ALSO SEE INSTALLATION MANUAL.
10. ALARM OUTPUT IS NORMALLY OPEN (NO) DRY CONTACT. IF 24 VAC IS NEEDED, CONNECT R FROM THERMOSTAT TERMINAL BLOCK TO ALR-COM TERMINAL, 24VAC WILL BE SENSED ON THE ALR-OUT WHEN THE UNIT IS IN ALARM CONDITION. OUTPUT WILL BE PULSED IF PULSE IS SELECTED.
11. REVERSING VALVES AND RELAYS ARE NOT PRESENT ON STRAIGHT COOL UNITS. ADDITIONAL TRANSFORMER NOT REQUIRED.
12. WIRE FOR LINE CONNECTION BETWEEN TB1 AND TB2 SUPPLIED BY FACTORY TO BE RECONNECTED IN THE FIELD.
13. WIRE FOR CLASS II VOLTAGE FACTORY SUPPLIED TO BE TERMINATED IN THE FIELD WIRES LABELED A, B, C, D AND E

COLOR CHART LEGEND	
ABBREVIATION	COLOR
BK	BLACK
BL	BLUE
BN	BROWN
GY	GRAY
GN	GREEN
OG	ORANGE
RD	RED
VT	VIOLET
WT	WHITE
YL	YELLOW

STATUS LED/ALARM BLINK CODES

CODE	FAULT	CODE	FAULT
1	HIGH PRESSURE FAULT - CKT 1	7	BROWN OUT FAULT
2	LOW PRESSURE FAULT - CKT 1	8	FREEZE SENSOR 2 FAULT
3	HIGH PRESSURE FAULT - CKT 2	9	FREEZE SENSOR 3 FAULT
4	LOW PRESSURE FAULT - CKT 2	10	FREEZE SENSOR 4 FAULT
5	FREEZE SENSOR 1 FAULT	11	REFRIGERANT LEAK FAULT
6	CONDENSATE FAULT	12	2ND STAGE COMMUNICATION FAULT

FACTORY WIRE ————————
FIELD WIRE — — — —

8 733 838 258 REV 5

Fig. 25 — 50BVT/V 044-064, Constant Volume Wiring Diagram (cont)

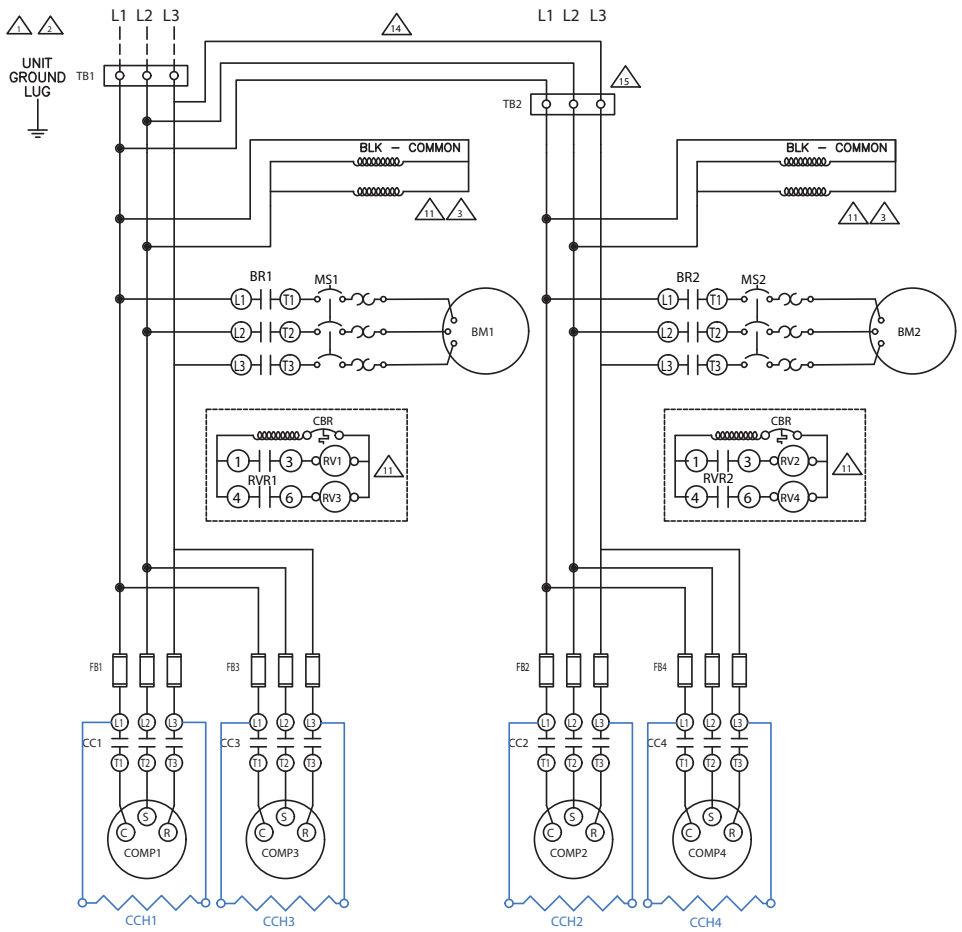

STANDARD COMPONENTS LEGEND:

#1	- FIRST STAGE
#2	- SECOND STAGE
#3	- THIRD STAGE
#4	- FOURTH STAGE
A2L	- AIR TO LIQUID REFRIGERANT LEAK SENSOR
BM	- BLOWER MOTOR
BR	- BLOWER RELAY
CBR	- 24VAC CIRCUIT BREAKER
CC	- COMPRESSOR CONTACTOR
CFR	- CROSS FUNCTIONAL MITIGATION RELAY (40 TON AND LARGER)
CS	- CONDENSATE SENSOR (1 PER DRAIN PAN)
FB	- FUSE BLOCK (COMPRESSORS)
FS	- FREEZE SENSOR
HPS	- HIGH PRESSURE SWITCH
LPS	- LOW PRESSURE SWITCH
MS	- MOTOR STARTER
RV	- REVERSING VALVE (HEAT PUMPS ONLY)
RVR	- REVERSING VALVE RELAY (HEAT PUMPS ONLY)
TB1	- PRIMARY TERMINAL BLOCK (HIGH VOLTAGE)
TB2	- SECONDARY TERMINAL BLOCK (HIGH VOLTAGE)

OPTIONAL COMPONENTS LEGEND:

[ ] AQS	- AQUASTAT (ECONOMIZER)
[ ] CCH	- CRANKCASE HEATER
[ ] CPM	- COMPRESSOR PROTECTION MODULE (15 TON AND LARGER COMPRESSORS)
[ ] CR	- COOLING/HEATING RELAY
[ ] ER	- ECONOMIZER RELAY
[ ] EMS	- ENERGY MGMT SYSTEM RELAY
[ ] HGV	- HOT GAS SOLENOID VALVE(S)
[ ] HSL	- HIGH TEMPERATURE SUCTION LIMIT (WITH HGBP ONLY)
[ ] MBV	- MODULATING BALL VALVE
[ ] MRV	- MODULATING REHEAT VALVE
[ ] MVR	- MODULATING BALL VALVE RELAY
[ ] RH1	- REHEAT RELAY 1
[ ] RH2	- REHEAT RELAY 2

COLOR CHART LEGEND	
ABBREVIATION	COLOR
BK	BLACK
BL	BLUE
BN	BROWN
GY	GRAY
GN	GREEN
OG	ORANGE
RD	RED
VT	VIOLET
WT	WHITE
YL	YELLOW

FACTORY WIRE ————
FIELD WIRE — — — —

8 733 838 259 REV 5

NOTES :

1. SEE UNIT NAME PLATE FOR ELECTRICAL RATING
2. ALL FIELD WIRING MUST BE IN ACCORDANCE WITH N.E.C.-N.F.P.A. #70, COPPER CONDUCTORS ONLY. CONDUCTEURS EN CUIVRE SEULEMENT.
3. 208/230V UNITS ARE FACTORY WIRED FOR 230V OPERATION. FOR 208V OPERATION, REMOVE 240V LEAD AND CONNECT IT TO 208V. CAP ALL UNUSED LEADS.
4. FOR ALTERNATE EMS COIL VOLTAGES CONSULT FACTORY.
5. UPM-I INCLUDES BUILT IN:
   270-300 SECOND RANDOM START
   300 SECOND DELAY ON BREAK
   120 SECOND LOW PRESSURE BYPASS
   120 SECOND FREEZE PROTECTION BYPASS
6. "TEST" DIP SWITCH REDUCES DELAYS TO 10 SEC WHEN SET TO YES. MUST BE SET TO "NO" FOR NORMAL OPERATION.
7. "FREEZE SENSOR" ON CONDENSER WILL BE SET TO 25°F BY DEFAULT. IF 15°F OPERATION IS REQUIRED, MOVE DIP SWITCH SLIDER TO THE 15°F POSITION.
8. "ALARM OUTPUT" DIP SWITCH MUST BE SET TO "PULSE" IF BLINKING T-STAT SERVICE LIGHT IS DESIRED.
9. DEFAULT SETTINGS FOR UPM BOARD FROM FACTORY SHOWN. ALSO SEE INSTALLATION MANUAL.
10. ALARM OUTPUT IS NORMALLY OPEN (NO) DRY CONTACT. IF 24 VAC IS NEEDED, CONNECT R FROM THERMOSTAT TERMINAL BLOCK TO ALR-COM TERMINAL, 24VAC WILL BE SENSED ON THE ALR-OUT WHEN THE UNIT IS IN ALARM CONDITION. OUTPUT WILL BE PULSED IF PULSE IS SELECTED.
11. REVERSING VALVES AND RELAYS ARE NOT PRESENT IN STRAIGHT COOL UNITS. ADDITIONAL TRANSFORMER NOT REQUIRED.
12. AQS CONTACTS R-B CLOSE WHEN ENTERING WATER TEMPERATURE IS BELOW SETPOINT OF AQS.
13. CR AND RH RELAYS ARE NOT PRESENT ON UNITS WITH DDC. H IS CONNECTED DIRECTLY TO HOT GAS VALVES.
14. WIRE FOR LINE CONNECTION BETWEEN TB1 AND TB2 SUPPLIED BY FACTORY TO BE RECONNECTED IN THE FIELD.
15. WIRE FOR CLASS II VOLTAGE FACTORY SUPPLIED TO BE TERMINATED IN THE FIELD WIRES LABELED A, B, C, D AND E

Fig. 26 — 50BVT/V 044-064, Options (Waterside Economizer, Hot Gas Reheat, Modulating Hot Gas Reheat), Constant Volume Wiring Diagram

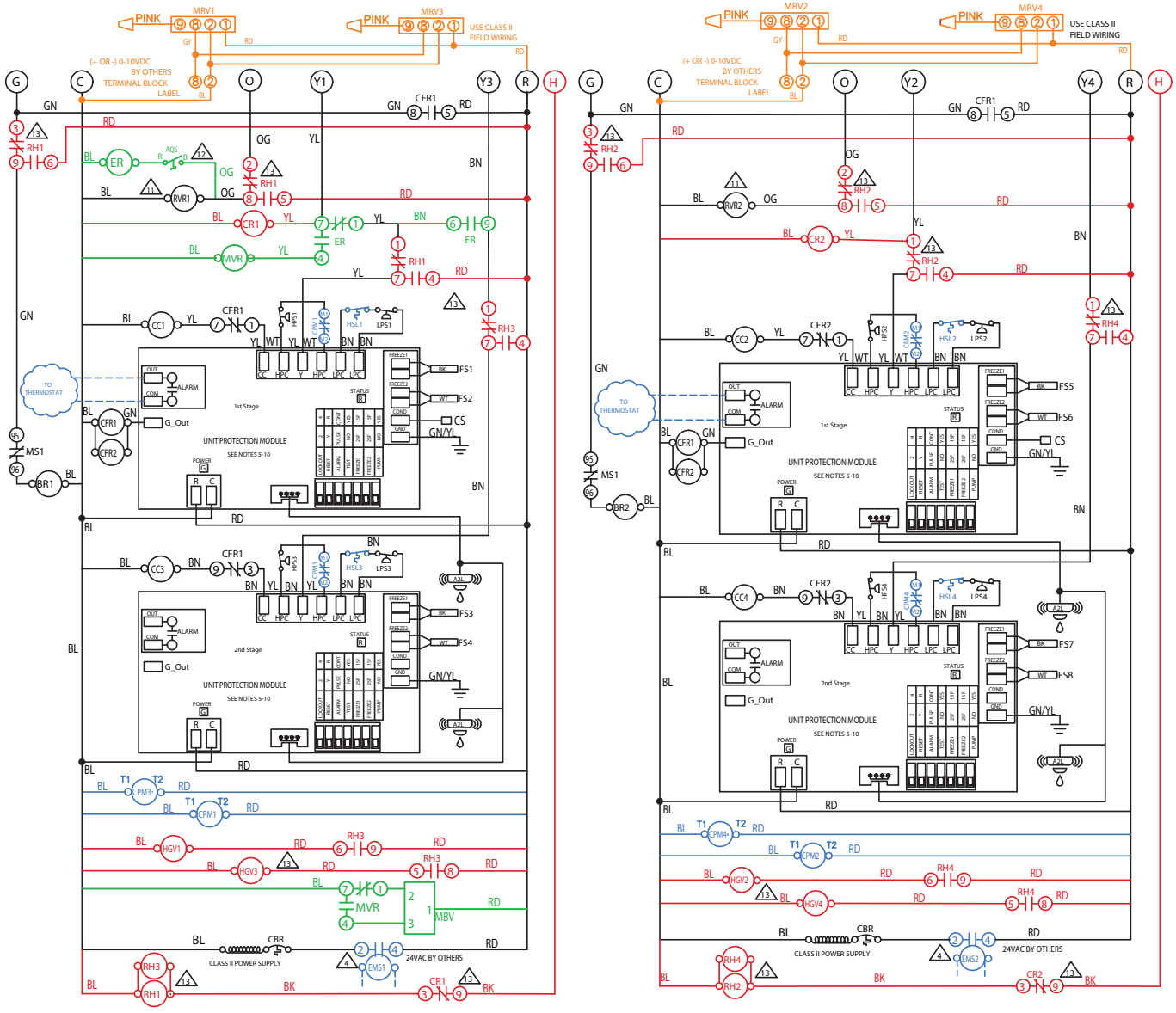

STANDARD COMPONENTS LEGEND:

#1 - FIRST STAGE
#2 - SECOND STAGE
#3 - THIRD STAGE
#4 - FOURTH STAGE
A2L - AIR TO LIQUID REFRIGERANT LEAK SENSOR
BM - BLOWER MOTOR
BR - BLOWER RELAY
CBR - 24VAC CIRCUIT BREAKER
CC - COMPRESSOR CONTACTOR
CFR - CROSS FUNCTIONAL MITIGATION RELAY (40 TON AND LARGER)
CS - CONDENSATE SENSOR (1 PER DRAIN PAN)
FB - FUSE BLOCK (COMPRESSORS)
FS - FREEZE SENSOR
HPS - HIGH PRESSURE SWITCH
LPS - LOW PRESSURE SWITCH
MS - MOTOR STARTER
RV - REVERSING VALVE (HEAT PUMPS ONLY)
RVR - REVERSING VALVE RELAY (HEAT PUMPS ONLY)
TB1 - PRIMARY TERMINAL BLOCK (HIGH VOLTAGE)
TB2 - SECONDARY TERMINAL BLOCK (HIGH VOLTAGE)

OPTIONAL COMPONENTS LEGEND:

[ ] AQS - AQUASTAT (ECONOMIZER)
[ ] CCH - CRANKCASE HEATER
[ ] CPM - COMPRESSOR PROTECTION MODULE (15 TON AND LARGER COMPRESSORS)
[ ] CR - COOLING/HEATING RELAY
[ ] ER - ECONOMIZER RELAY
[ ] EMS - ENERGY MGMT SYSTEM RELAY
[ ] HGV - HOT GAS SOLENOID VALVE(S)
[ ] HSL - HIGH TEMPERATURE SUCTION LIMIT (WITH HGBP ONLY)
[ ] MBV - MODULATING BALL VALVE
[ ] MRV - MODULATING REHEAT VALVE
[ ] MVR - MODULATING BALL VALVE RELAY
[ ] RH1 - REHEAT RELAY 1
[ ] RH2 - REHEAT RELAY 2

NOTES :

1. SEE UNIT NAME PLATE FOR ELECTRICAL RATING
2. ALL FIELD WIRING MUST BE IN ACCORDANCE WITH N.E.C.-N.F.P.A. #70, COPPER CONDUCTORS ONLY. CONDUCTEURS EN CUIVRE SEULEMENT.
3. 208/230V UNITS ARE FACTORY WIRED FOR 230V OPERATION. FOR 208V OPERATION, REMOVE 240V LEAD AND CONNECT IT TO 208V. CAP ALL UNUSED LEADS.
4. FOR ALTERNATE EMS COIL VOLTAGES CONSULT FACTORY.
5. UPM-I INCLUDES BUILT IN:
   270-300 SECOND RANDOM START
   300 SECOND DELAY ON BREAK
   120 SECOND LOW PRESSURE BYPASS
   120 SECOND FREEZE PROTECTION BYPASS
6. "TEST" DIP SWITCH REDUCES DELAYS TO 10 SEC WHEN SET TO YES. MUST BE SET TO "NO" FOR NORMAL OPERATION.
7. "FREEZE SENSOR" ON CONDENSER WILL BE SET TO 25°F BY DEFAULT. IF 15°F OPERATION IS REQUIRED, MOVE DIP SWITCH SLIDER TO THE 15°F POSITION.
8. "ALARM OUTPUT" DIP SWITCH MUST BE SET TO "PULSE" IF BLINKING T-STAT SERVICE LIGHT IS DESIRED.
9. DEFAULT SETTINGS FOR UPM BOARD FROM FACTORY SHOWN. ALSO SEE INSTALLATION MANUAL.
10. ALARM OUTPUT IS NORMALLY OPEN (NO) DRY CONTACT. IF 24 VAC IS NEEDED, CONNECT R FROM THERMOSTAT TERMINAL BLOCK TO ALR-COM TERMINAL, 24VAC WILL BE SENSED ON THE ALR-OUT WHEN THE UNIT IS IN ALARM CONDITION. OUTPUT WILL BE PULSED IF PULSE IS SELECTED.
11. REVERSING VALVES AND RELAYS ARE NOT PRESENT IN STRAIGHT COOL UNITS. ADDITIONAL TRANSFORMER NOT REQUIRED.
12. AQS CONTACTS R-B CLOSE WHEN ENTERING WATER TEMPERATURE IS BELOW SETPOINT OF AQS.
13. CR AND RH RELAYS ARE NOT PRESENT ON UNITS WITH DDC. H IS CONNECTED DIRECTLY TO HOT GAS VALVES.
14. WIRE FOR LINE CONNECTION BETWEEN TB1 AND TB2 SUPPLIED BY FACTORY TO BE RECONNECTED IN THE FIELD.
15. WIRE FOR CLASS II VOLTAGE FACTORY SUPPLIED TO BE TERMINATED IN THE FIELD WIRES LABELED A, B, C, D AND E

COLOR CHART LEGEND	
ABBREVIATION	COLOR
BK	BLACK
BL	BLUE
BN	BROWN
GY	GRAY
GN	GREEN
OG	ORANGE
RD	RED
VT	VIOLET
WT	WHITE
YL	YELLOW

STATUS LED/ALARM BLINK CODES

CODE	FAULT	CODE	FAULT
1	HIGH PRESSURE FAULT - CKT 1	7	BROWN OUT FAULT
2	LOW PRESSURE FAULT - CKT 1	8	FREEZE SENSOR 2 FAULT
3	HIGH PRESSURE FAULT - CKT 2	9	FREEZE SENSOR 3 FAULT
4	LOW PRESSURE FAULT - CKT 2	10	FREEZE SENSOR 4 FAULT
5	FREEZE SENSOR 1 FAULT	11	REFRIGERANT LEAK FAULT
6	CONDENSATE FAULT	12	2ND STAGE COMMUNICATION FAULT

FACTORY WIRE ————
FIELD WIRE — — —

8 733 838 259 REV 5

Fig. 27 — 50BVT/V 044-064, Options (Waterside Economizer, Hot Gas Reheat, Modulating Hot Gas Reheat), Constant Volume Wiring Diagram (cont)

STATUS LED/ALARM BLINK CODES	
1	HIGH PRESSURE FAULT – CKT 1
2	LOW PRESSURE FAULT – CKT 1
3	HIGH PRESSURE FAULT – CKT 2
4	LOW PRESSURE FAULT – CKT 2
5	FREEZE SENSOR 1 FAULT
6	CONDENSATE FAULT
7	BROWN OUT FAULT
8	FREEZE SENSOR 2 FAULT
9	FREEZE SENSOR 3 FAULT
10	FREEZE SENSOR 4 FAULT
11	REFRIGERANT LEAK FAULT
12	2ND STAGE COMMUNICATION FAULT

COLOR CHART LEGEND	
ABBREVIATION	COLOR
BK	BLACK
BL	BLUE
BN	BROWN
GY	GRAY
GN	GREEN
OG	ORANGE
RD	RED
VT	VIOLET
WT	WHITE
YL	YELLOW

FACTORY WIRE ————

FIELD WIRE — — —

STANDARD COMPONENTS LEGEND:

#1 - FIRST STAGE
#2 - SECOND STAGE
A2L - AIR TO LIQUID REFRIGERANT LEAK SENSOR
AMR - A2L MITIGATION RELAY
BM - BLOWER MOTOR
CBR - 24VAC CIRCUIT BREAKER
CC - COMPRESSOR CONTACTOR
CMR - COMPRESSOR MONITOR RELAY
CS - CONDENSATE SENSOR (1 PER DRAIN PAN)
CSS - COMPRESSOR SENSOR SWITCH
FB - FUSE BLOCK (COMPRESSORS)
FS - FREEZE SENSOR
HPS - HIGH PRESSURE SWITCH
LPS - LOW PRESSURE SWITCH
P1,P2- BLOWER MOTOR PROTECTION (INVERTER BLOWERS ONLY)
SSR - START/STOP RELAY
TB1 - PRIMARY TERMINAL BLOCK (HIGH VOLTAGE)
TB2 - VFD TERMINAL BLOCK (HIGH VOLTAGE)
VFD - VARIABLE FREQUENCY DRIVE

OPTIONAL COMPONENTS LEGEND:

[ ] CCH - CRANKCASE HEATER
[ ] CPM - COMPRESSOR PROTECTION MODULE (15 TON AND LARGER COMPRESSORS)
[ ] FB1 - FUSE BLOCK (WITH ACH580 MODEL ONLY)
[ ] HSL - HIGH TEMPERATURE SUCTION LIMIT (WITH HGBP ONLY)
[ ] MBV - MOTORIZED BALL VALVE (ECONOMIZER)
[ ] MVR - MOTORIZED BALL VALVE RELAY (ECONOMIZER)

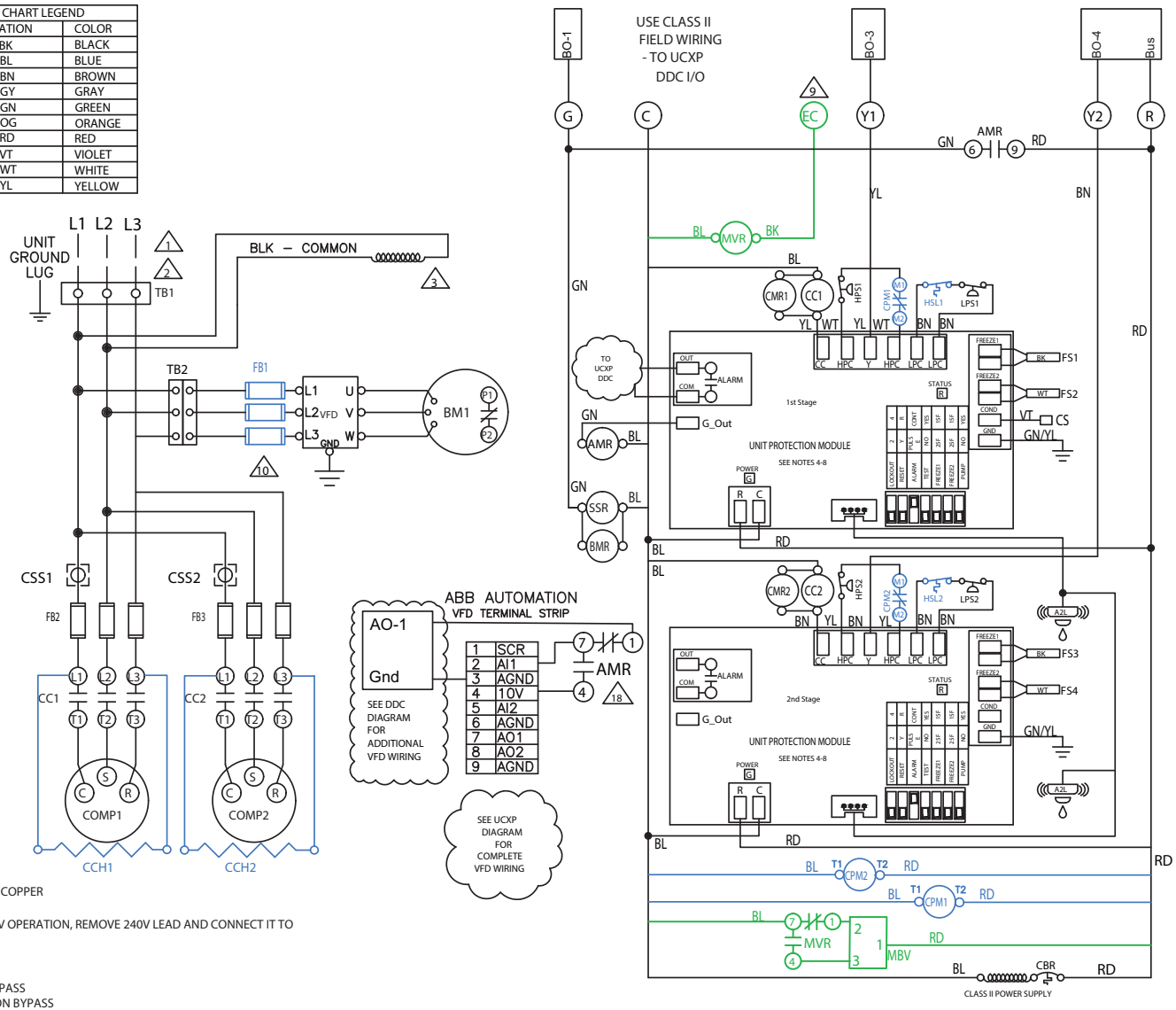

NOTES :

1. SEE UNIT NAME PLATE FOR ELECTRICAL RATING
2. ALL FIELD WIRING MUST BE IN ACCORDANCE WITH N.E.C.-N.F.P.A. #70, COPPER CONDUCTORS ONLY. CONDUCTEURS EN CUIVRE SEULEMENT.
3. 208/230V UNITS ARE FACTORY WIRED FOR 230V OPERATION. FOR 208V OPERATION, REMOVE 240V LEAD AND CONNECT IT TO 208V. CAP ALL UNUSED LEADS..
4. UPM-I INCLUDES BUILT IN: 270-300 SECOND RANDOM START
   300 SECOND DELAY ON BREAK
   120 SECOND LOW PRESSURE BYPASS
   120 SECOND FREEZE PROTECTION BYPASS
5. "TEST" DIP SWITCH REDUCES DELAYS TO 10 SEC WHEN SET TO YES. MUST BE SET TO "NO" FOR NORMAL OPERATION.
6. "FREEZE SENSOR" ON CONDENSER WILL BE SET TO 25°F BY DEFAULT. IF 15°F OPERATION IS REQUIRED, MOVE DIP SWITCH SLIDER TO THE 15°F POSITION.
7. "ALARM OUTPUT" DIP SWITCH MUST BE SET TO "PULSE" IF BLINKING T-STAT SERVICE LIGHT IS DESIRED.
8. DEFAULT SETTINGS FOR UPM BOARD FROM FACTORY SHOWN. ALSO SEE INSTALLATION MANUAL.
9. OPTIONAL ECONOMIZER SIGNAL WILL BE PROVIDED BY BO-2 OF THE UCXPIO CONTROLLER.
10. FUSE PROTECTION IS REQUIRED ON ABB ACH580 MODELS PER UL-61800-5-1.

8 733 838 236 REV 4

Fig. 28 — 50BVW034 with SCU Open DDC

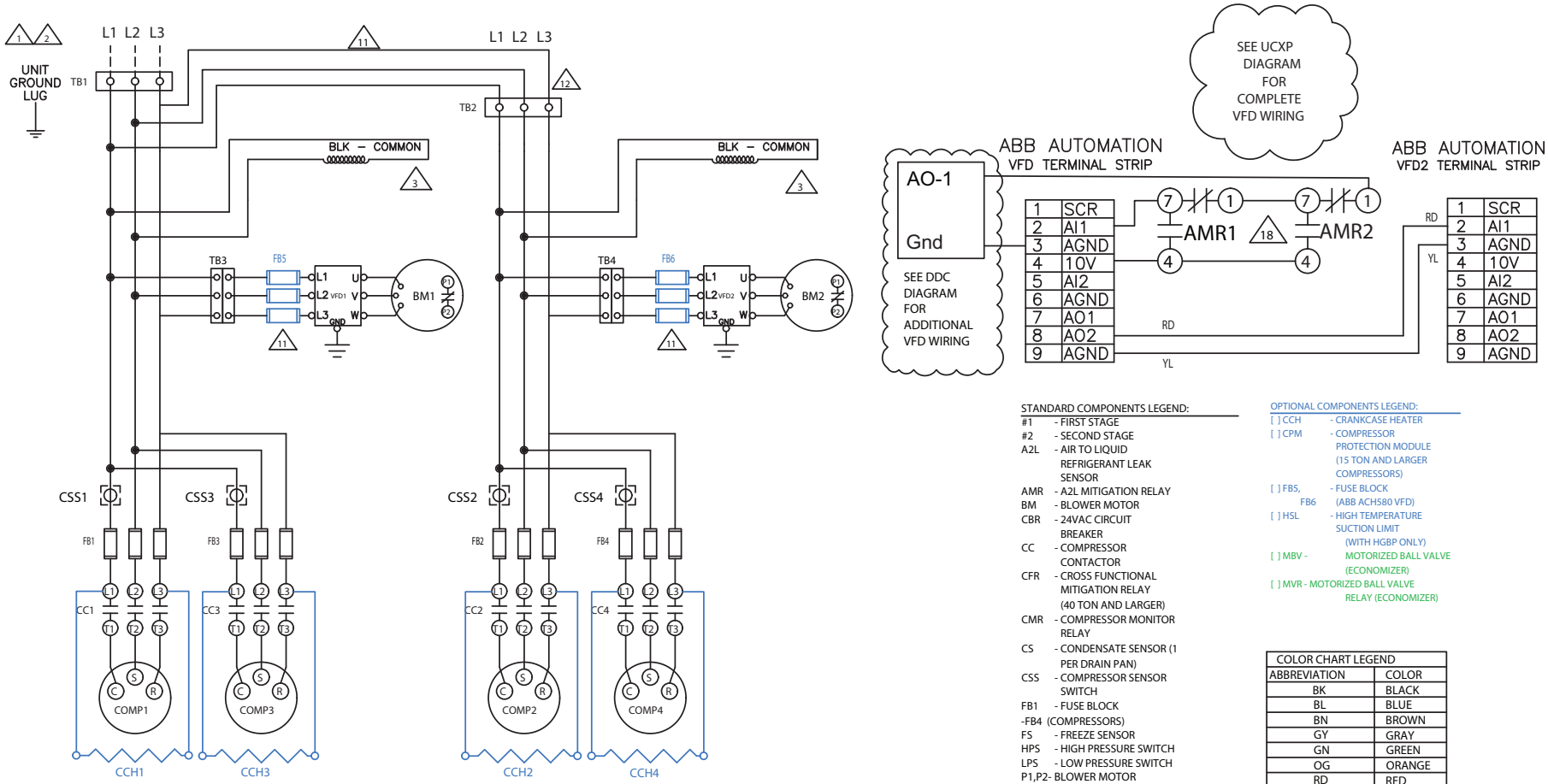

STANDARD COMPONENTS LEGEND:

- #1 - FIRST STAGE
- #2 - SECOND STAGE
- A2L - AIR TO LIQUID REFRIGERANT LEAK SENSOR
- AMR - A2L MITIGATION RELAY
- BM - BLOWER MOTOR
- CBR - 24VAC CIRCUIT BREAKER
- CC - COMPRESSOR CONTACTOR
- CFR - CROSS FUNCTIONAL MITIGATION RELAY (40 TON AND LARGER)
- CMR - COMPRESSOR MONITOR RELAY
- CS - CONDENSATE SENSOR (1 PER DRAIN PAN)
- CSS - COMPRESSOR SENSOR SWITCH
- FB1 - FUSE BLOCK
- -FB4 (COMPRESSORS)
- FS - FREEZE SENSOR
- HPS - HIGH PRESSURE SWITCH
- LPS - LOW PRESSURE SWITCH
- P1,P2- BLOWER MOTOR PROTECTION (INVERTER BLOWERS
- SSR - START/STOP RELAY
- TB1 - PRIMARY TERMINAL BLOCK (HIGH VOLTAGE)
- TB2 - SECONDARY TERMINAL BLOCK (HIGH VOLTAGE)
- TB3 - VFD1 TERMINAL BLOCK (HIGH VOLTAGE)
- TB4 - VFD2 TERMINAL BLOCK (HIGH VOLTAGE)
- VFD - VARIABLE FREQUENCY DRIVE

OPTIONAL COMPONENTS LEGEND:

- [ ] CCH - CRANKCASE HEATER
- [ ] CPM - COMPRESSOR PROTECTION MODULE (15 TON AND LARGER COMPRESSORS)
- [ ] FB5, FB6 - FUSE BLOCK (ABB ACH580 VFD)
- [ ] HSL - HIGH TEMPERATURE SUCTION LIMIT (WITH HGBP ONLY)
- [ ] MBV - MOTORIZED BALL VALVE (ECONOMIZER)
- [ ] MVR - MOTORIZED BALL VALVE RELAY (ECONOMIZER)

COLOR CHART LEGEND	
ABBREVIATION	COLOR
BK	BLACK
BL	BLUE
BN	BROWN
GY	GRAY
GN	GREEN
OG	ORANGE
RD	RED
VT	VIOLET
WT	WHITE
YL	YELLOW

FACTORY WIRE ————

FIELD WIRE — — —

8 733 838 239 REV 5

NOTES :

1. SEE UNIT NAME PLATE FOR ELECTRICAL RATING
2. ALL FIELD WIRING MUST BE IN ACCORDANCE WITH N.E.C.-N.F.P.A. #70, COPPER CONDUCTORS ONLY. CONDUCTEURS EN CUIVRE SEULEMENT.
3. 208/230V UNITS ARE FACTORY WIRED FOR 230V OPERATION. FOR 208V OPERATION, REMOVE 240V LEAD AND CONNECT IT TO 208V. CAP ALL UNUSED LEADS.
4. UPM-I INCLUDES BUILT IN:
   - 270-300 SECOND RANDOM START
   - 300 SECOND DELAY ON BREAK
   - 120 SECOND LOW PRESSURE BYPASS
   - 120 SECOND FREEZE PROTECTION BYPASS
5. "TEST" DIP SWITCH REDUCES DELAYS TO 10 SEC WHEN SET TO YES. MUST BE SET TO "NO" FOR NORMAL OPERATION.
6. "FREEZE SENSOR" ON CONDENSER WILL BE SET TO 25°F BY DEFAULT. IF 15°F OPERATION IS REQUIRED, MOVE DIP SWITCH SLIDER TO THE 15°F POSITION.
7. "ALARM OUTPUT" DIP SWITCH MUST BE SET TO "PULSE" IF BLINKING T-STAT SERVICE LIGHT IS DESIRED.
8. DEFAULT SETTINGS FOR UPM BOARD FROM FACTORY SHOWN. ALSO SEE INSTALLATION MANUAL.
9. OPTIONAL ECONOMIZER SIGNAL WILL BE PROVIDED BY BO-2 OF THE UCXPIO CONTROLLER.
10. FUSE PROTECTION IS REQUIRED ON ABB ACH580 MODELS PER UL-61800-5-1.
11. WIRE FOR LINE CONNECTION BETWEEN TB1 AND TB2 SUPPLIED BY FACTORY TO BE RECONNECTED IN THE FIELD.
12. WIRE FOR CLASS II VOLTAGE FACTORY SUPPLIED TO BE TERMINATED IN THE FIELD WIRES LABELED A, B, C, D AND E
13. TO CONTROL BOTH BLOWER MOTORS WITH SINGLE G CALL SIGNAL, CONNECT BOTH G CALL TERMINAL BLOCK POSITIONS TOGETHER.

Fig. 29 — 50BVW044-064 with SCU Open DDC

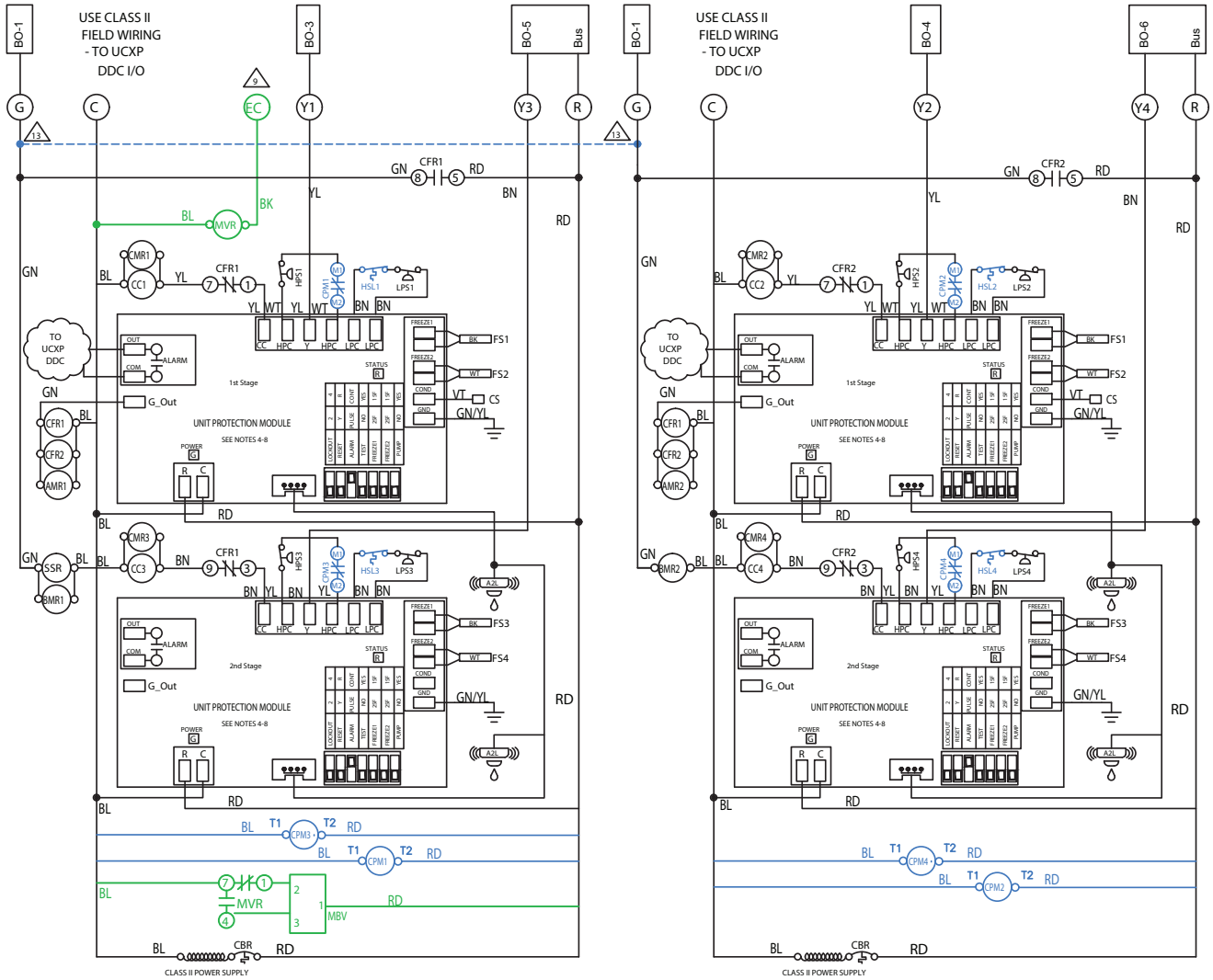

STANDARD COMPONENTS LEGEND:

- #1 - FIRST STAGE
- #2 - SECOND STAGE
- A2L - AIR TO LIQUID REFRIGERANT LEAK SENSOR
- AMR - A2L MITIGATION RELAY
- BM - BLOWER MOTOR
- CBR - 24VAC CIRCUIT BREAKER
- CC - COMPRESSOR CONTACTOR
- CFR - CROSS FUNCTIONAL MITIGATION RELAY (40 TON AND LARGER)
- CMR - COMPRESSOR MONITOR RELAY
- CS - CONDENSATE SENSOR (1 PER DRAIN PAN)
- CSS - COMPRESSOR SENSOR SWITCH
- FB - FUSE BLOCK (COMPRESSORS)
- FS - FREEZE SENSOR
- HPS - HIGH PRESSURE SWITCH
- LPS - LOW PRESSURE SWITCH
- P1,P2 - BLOWER MOTOR PROTECTION (INVERTER BLOWERS ONLY)
- SSR - START/STOP RELAY
- TB1 - PRIMARY TERMINAL BLOCK (HIGH VOLTAGE)
- TB2 - SECONDARY TERMINAL BLOCK (HIGH VOLTAGE)
- TB3 - VFD1 TERMINAL BLOCK (HIGH VOLTAGE)
- TB4 - VFD2 TERMINAL BLOCK (HIGH VOLTAGE)
- VFD - VARIABLE FREQUENCY DRIVE

OPTIONAL COMPONENTS LEGEND:

- [ ] CCH - CRANKCASE HEATER
- [ ] CPM - COMPRESSOR PROTECTION MODULE (15 TON AND LARGER COMPRESSORS)
- [ ] FBS, FB6 - FUSE BLOCK (ABB ACH580 VFD)
- [ ] HSL - HIGH TEMPERATURE SUCTION LIMIT (WITH HGBP ONLY)
- [ ] MBV - MOTORIZED BALL VALVE (ECONOMIZER)
- [ ] MVR - MOTORIZED BALL VALVE RELAY (ECONOMIZER)

NOTES :

1. SEE UNIT NAME PLATE FOR ELECTRICAL RATING
2. ALL FIELD WIRING MUST BE IN ACCORDANCE WITH N.E.C.-N.F.P.A. #70, COPPER CONDUCTORS ONLY. CONDUCTEURS EN CUIVRE SEULEMENT.
3. 208/230V UNITS ARE FACTORY WIRED FOR 230V OPERATION. FOR 208V OPERATION, REMOVE 240V LEAD AND CONNECT IT TO 208V. CAP ALL UNUSED LEADS.
4. UPM-I INCLUDES BUILT IN:
   - 270-300 SECOND RANDOM START
   - 300 SECOND DELAY ON BREAK
   - 120 SECOND LOW PRESSURE BYPASS
   - 120 SECOND FREEZE PROTECTION BYPASS
5. "TEST" DIP SWITCH REDUCES DELAYS TO 10 SEC WHEN SET TO YES. MUST BE SET TO "NO" FOR NORMAL OPERATION.
6. "FREEZE SENSOR" ON CONDENSER WILL BE SET TO 25°F BY DEFAULT. IF 15°F OPERATION IS REQUIRED, MOVE DIP SWITCH SLIDER TO THE 15°F POSITION.
7. "ALARM OUTPUT" DIP SWITCH MUST BE SET TO "PULSE" IF BLINKING T-STAT SERVICE LIGHT IS DESIRED.
8. DEFAULT SETTINGS FOR UPM BOARD FROM FACTORY SHOWN. ALSO SEE INSTALLATION MANUAL.
9. OPTIONAL ECONOMIZER SIGNAL WILL BE PROVIDED BY BO-2 OF THE UCXPIO CONTROLLER.
10. FUSE PROTECTION IS REQUIRED ON ABB ACH580 MODELS PER UL-61800-5-1.
11. WIRE FOR LINE CONNECTION BETWEEN TB1 AND TB2 SUPPLIED BY FACTORY TO BE RECONNECTED IN THE FIELD.
12. WIRE FOR CLASS II VOLTAGE FACTORY SUPPLIED TO BE TERMINATED IN THE FIELD WIRES LABELED A, B, C, D AND E
13. TO CONTROL BOTH BLOWER MOTORS WITH SINGLE G CALL SIGNAL, CONNECT BOTH G CALL TERMINAL BLOCK POSITIONS TOGETHER.

8 733 838 239 REV 5

COLOR CHART LEGEND

ABBREVIATION	COLOR
BK	BLACK
BL	BLUE
BN	BROWN
GY	GRAY
GN	GREEN
OG	ORANGE
RD	RED
VT	VIOLET
WT	WHITE
YL	YELLOW

STATUS LED/ALARM BLINK CODES

CODE	FAULT	CODE	FAULT
1	HIGH PRESSURE FAULT - CKT 1	7	BROWN OUT FAULT
2	LOW PRESSURE FAULT - CKT 1	8	FREEZE SENSOR 2 FAULT
3	HIGH PRESSURE FAULT - CKT 2	9	FREEZE SENSOR 3 FAULT
4	LOW PRESSURE FAULT - CKT 2	10	FREEZE SENSOR 4 FAULT
5	FREEZE SENSOR 1 FAULT	11	REFRIGERANT LEAK FAULT
6	CONDENSATE FAULT	12	2ND STAGE COMMUNICATION FAULT

FACTORY WIRE ————————

FIELD WIRE — — — —

Fig. 30 — 50BVW044-064 with SCU Open DDC (cont)

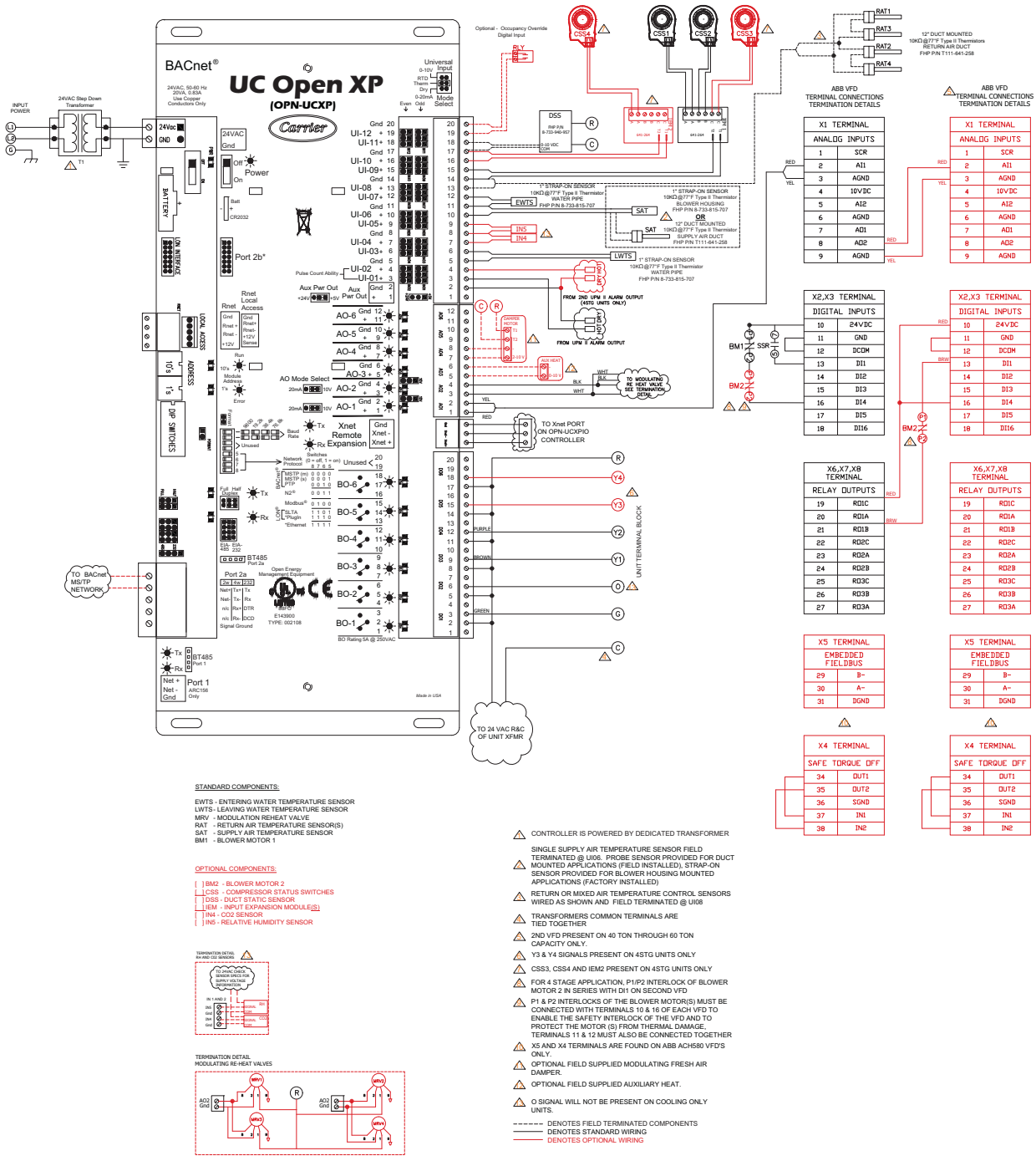

Fig. 31 — 50BVW SCU VAV Open DDC Wiring Diagram

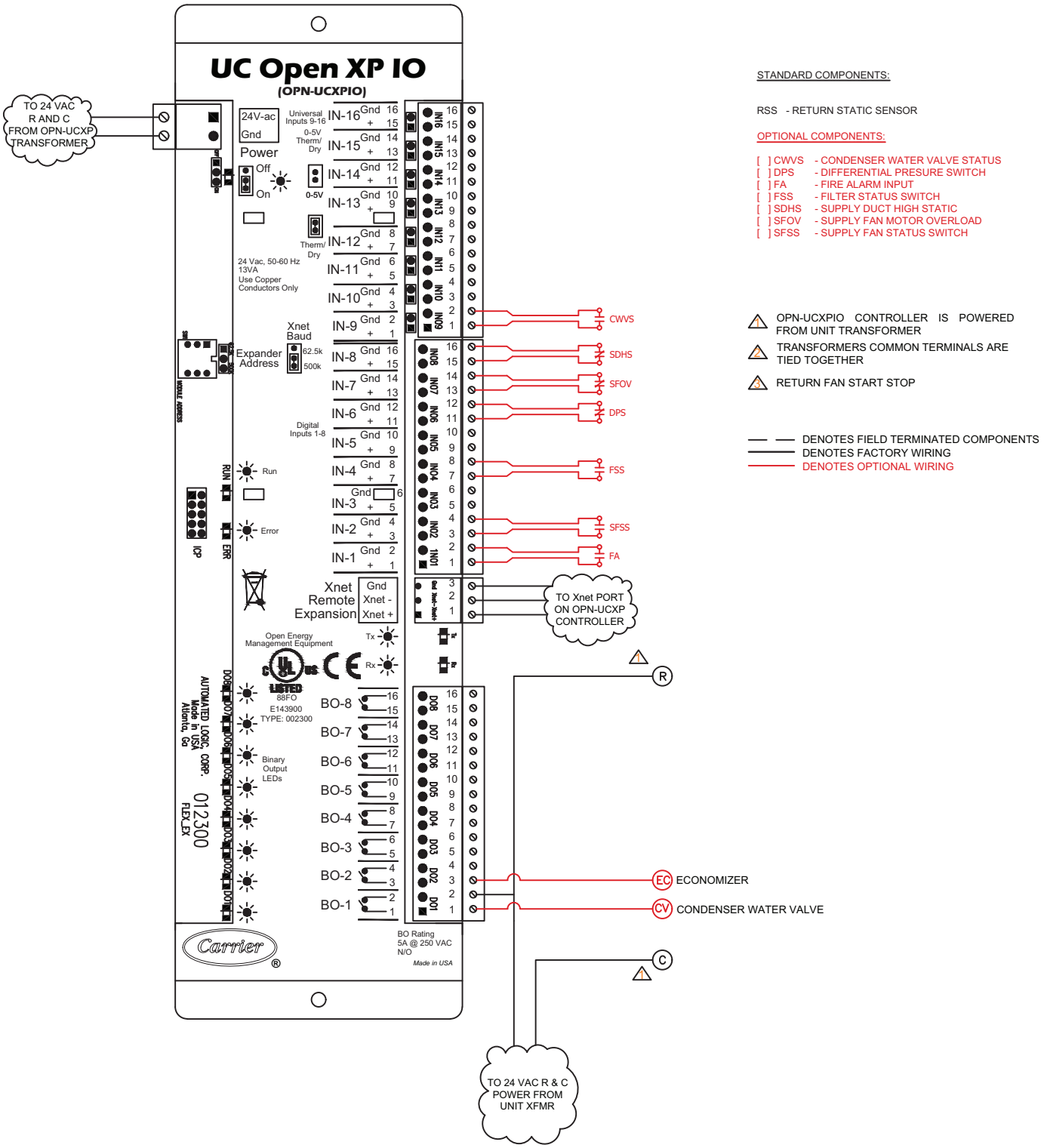

Fig. 32 — 50BVW SCU VAV Open DDC Expander Wiring Diagram

CONTROL WIRING (VAV ONLY)

See SCU VAV Open Controller manual for complete details regarding control wiring for VAV units. Refer to Table 9 for recommended cable use.

Table 9 — Recommended Cables

MANUFACTURER	PART NUMBER
Alpha	2413 or 5463
American	A22503
Belden	8772
Columbia	02525

Step 7 — Configure Unit Control Components

UNIT PROTECTION MODULE

The Unit Protection Module (UPM) as shown in Fig. 33 is a printed circuit board (PCB) included in all units, that interfaces with the thermostat or the digital direct controller.

The main purpose of this device is to protect the compressors by monitoring the different states of switches and sensors of each refrigerant circuit. This device provides time delays and protects the unit against freezing of the water and refrigerant heat exchangers as well as condensate overflow when the appropriate sensors are installed.

All 50BV034 units have 2 factory installed UPM boards, and 50BV044-064 have 4 factory installed UPM boards. One dedicated to each circuit of the unit.

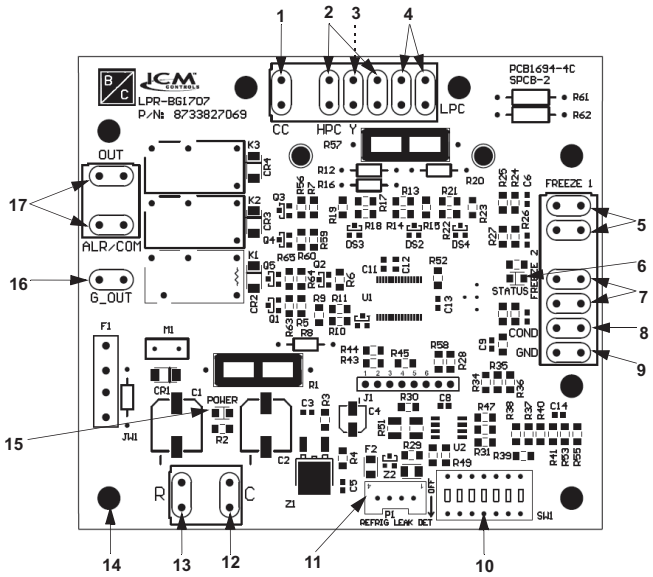

1	Compressor Contact Output
2	High Pressure Switch Connection
3	Call for Compressor (Y1)
4	Low-Pressure Switch Connection
5	Water Coil Freeze Connection (FREEZE 1)
6	UPM Status LED Indicator (fault status)
7	Air Coil Freeze Connection (FREEZE 2)
8	Condensate Overflow Sensor Connection
9	Ground
10	UPM Settings DIP Switch (SW1)
11	A2L Sensor
12	24 Vac Power Connection
13	24 Vac Power Input
14	UPM Standoff
15	Power LED
16	Fan
17	Dry Contact

Fig. 33 — Unit Protection Module (UPM)

UPM STANDARD SAFETIES AND ALARMS

Features of the unit protection module include:

High and Low Refrigerant Pressure Protection

- High-Pressure switch located in the refrigerant discharge line and wired across the HPC (High-Pressure Switch Connection) terminals on the UPM.
- Low-Pressure switch located in the unit refrigerant suction line and wired across the LPC (Low-Pressure Switch Connection) terminals (LPC1 and LPC2) on the UPM.

Water Coil Freeze Protection

Waterside freeze protection sensor, mounted close to condensing water coil (see Fig. 34), monitors refrigerant temperature between condensing water coil and thermal expansion valve.

If temperature drops below or remains at freeze limit trip for 120 seconds, the controller will shut down the compressor and enter into a soft-lockout condition. The default freeze limit trip is 25°F; however, this can be changed to 15°F by flipping DIP switch SW1. Refer to Fig. 33, Item 10, Fig. 36, and Table 10.

IMPORTANT: The freeze sensor will not guard against the loss of water. A flow switch is recommended to prevent the unit from running if water flow is lost or reduced.

IMPORTANT: If the unit is employing a fresh water system (no anti-freeze protection), it is extremely important to have the Freeze 1 set to 25°F (DIP Switch SW1 set to OFF) in order to shut down the unit at the appropriate leaving water temperature and protect your heat pump from freezing if a freeze sensor is included.

Table 10 — UPM DIP Switch Selectable Positions

TOGGLE	FUNCTION	ON	OFF	FACTORY DEFAULT
1	Lockout	4	2	2
2	Reset	R	Y	Y
3	Alarm	CONT	PULSE	PULSE
4	Test	YES	NO	NO
5	Freeze 1	15°F	25°F	25°F
6	Freeze 2	15°F	25°F	25°F
7	Pump	ON	OFF	OFF

Air Coil Freeze Protection

Air coil freeze protection sensor, mounted between the thermal expansion device and the evaporator (see Fig. 35), monitors refrigerant temperature between the evaporator coil and the thermal expansion valve. If temperature drops below or remains at the freeze limit trip for 30 seconds, the controller will shut down the compressor and enter into a soft-lockout condition. The default freeze limit trip is 25°F, this can be changed to 15°F by flipping DIP switch SW1. (See Fig. 33, Item 10, Fig. 36, and Table 10.)

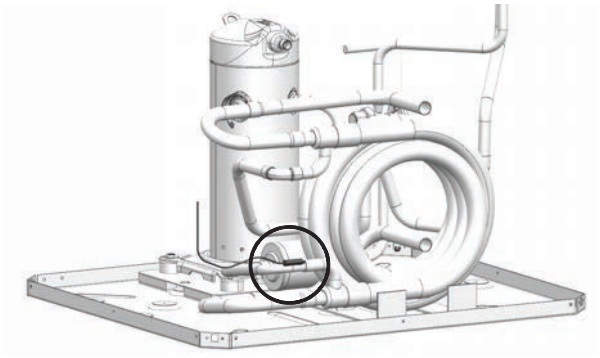

Fig. 34 — Waterside Freeze Protection Sensor

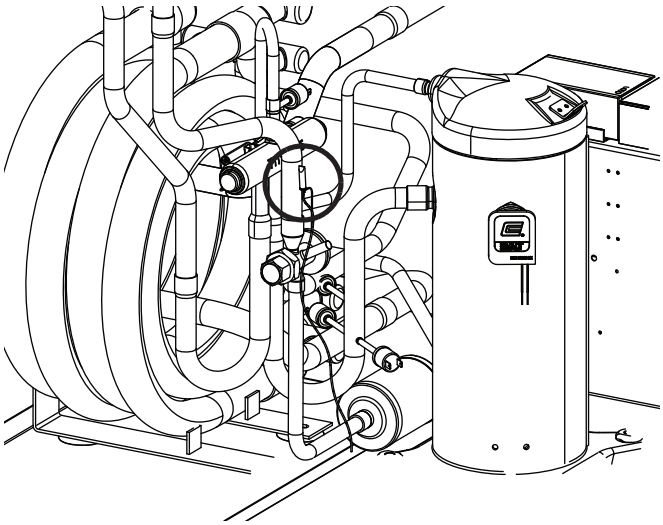

Fig. 35 — Air Coil Freeze Protection Sensor

High Condensate Level Shutdown

The condensate overflow protection sensor is located in the drain pan of the unit and connected to the "COND" terminal on the UPM board. (See Fig. 33, Item 8.)

Anti-Short Cycle Timer

Five-minute delay on break timer to prevent compressor short cycling.

Random Start Time Delay

Each controller has a unique random start delay ranging from 270 to 300 seconds on initial power up to reduce the chance of multiple units simultaneously starting at the same time after power up or after a power interruption, in order to avoid creating a large electrical spike.

Low Pressure Bypass Timer

If the compressor is running and the low-pressure switch opens, the controller will keep the compressor ON for 120 seconds. After 2 minutes, if the low-pressure switch remains open, the controllers will shut down the compressor and enter a soft lockout. The compressor will not be energized until the low-pressure switch closes and the anti-short cycle time delay expires. If the low-pressure switch opens two or four times in one hour, the unit will enter a hard lockout. In order to exit hard lockout, power to the unit must be reset. The reset signal is either a "Y" or "R" signal, depending on the position of the DIP Switch as shown in Table 10. If the reset is set to "R," the board must be manually powered off and powered back on to exit the hard lockout.

Brownout/Surge/Power Interruption Protection

The brownout protection in the UPM Board will shut down the compressor if the incoming power falls below 18vac. The compressor will remain OFF until the voltage is above 18vac and the Anti-Short Cycle Timer (300 seconds) times out. The unit will not go into a hard lockout.

Alarm Output

Alarm output is Normally Open (NO) dry contact. If pulse is selected the alarm output will be pulsed. The fault output will depend on the DIP Switch setting for "ALARM." If set to "CONST," a constant signal will be produced to indicate a fault has occurred and the unit requires inspection to determine the type of fault. If it is set to "PULSE," a pulse signal is produced and a fault code is detected by a remote device indicating the fault. For blink code explanation, see Table 11. The remote device must have an analog input with malfunction detection capability to interpret PULSE signal when the UPM Board is set to "PULSE."

IMPORTANT: If 24 VAC output is needed R must be wired to ALR-COM terminal; 24 VAC will be available to the ALR-OUT terminal when the unit is in the alarm condition.

Test DIP Switch

A test DIP Switch is provided to reduce all time delay settings to 10 seconds during troubleshooting or verification of unit operation.

IMPORTANT: Operation of the unit in test mode can lead to accelerated wear and premature failure of components. The "TEST" switch must be set back to "NO" after troubleshooting or servicing is complete.

Intelligent Alarm Reset

If fault condition is initiated, the five-minute delay on break time period is initiated and the unit will restart after these delays expire. During this period the fault LED will indicate the cause of the fault. If the fault condition still exists or occurs two or four times (depending on "2" or "4" setting for Lockout DIP Switch) before 60 minutes, the unit will go into a hard lockout and requires a manual lockout reset.

Hard Lockout Reset

A hard lockout can be reset by turning the unit thermostat off and then back on when the "RESET" DIP Switch is set to "Y" or by shutting off unit power at the circuit breaker when the "RESET" DIP Switch is set to "R."

NOTE: The blower motor will remain active during a lockout condition.

Table 11 — UPM Fault Blink Codes

BLINKS	FAULT	FAULT CRITERIA
0 (None-Solid)	None	None. Adequate 18-30 vac power is present.
1	High Pressure Sensor #1	Refrigerant discharge pressure has exceeded 600 psig.
2	Low Pressure Sensor #1	Refrigerant suction pressure has fallen below 40 psig.
3	High Pressure Sensor #2	Refrigerant discharge pressure has exceeded 600 psig.
4	Low Pressure Sensor #2	Refrigerant suction pressure has fallen below 40 psig.
5	Freeze Sensor #1 Water Coil Freeze Condition	Refrigerant temperature to the water coil has fallen below 25°F for 30 seconds.
6	Condensate Overflow	Condensate levels in the unit drain pan are too high.
7	Brownout	Control voltage has fallen below 18 vac.
8	Freeze Sensor #2 Air Coil Freeze Condition	Refrigerant temperature to the air coil has fallen below 25°F for 30 seconds.
9	Freeze Sensor #3 Water Coil Freeze Condition	Refrigerant temperature to the water coil has fallen below 25°F for 30 seconds.
10	Freeze Sensor #4 Water Coil Freeze Condition	Refrigerant temperature to the water coil has fallen below 25°F for 30 seconds.
11	Refrigerant Leak Fault	Refrigerant LFL% is more than 15%.
12	UPM Board Connection Loss	Lost communication with second stage UPM board.

NOTE: Each 50BV unit comes with two UPM boards dedicated to each refrigerant circuit. It is important to note that the blink codes on the UPM boards will not synchronize. Therefore, the blinks must be counted separately on each UPM board.

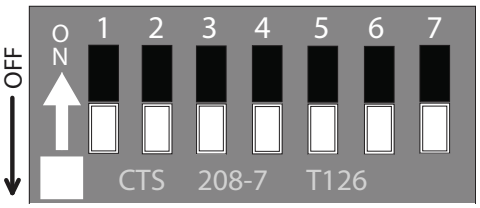

Fig. 36 — UPM Settings DIP Switch (SW1)

WATERSIDE ECONOMIZER (CV UNITS)

When the waterside economizer option is built on CV that do not include a factory controller, it will include an Aquastat for economizer control. The Aquastat can be adjusted between 20°F and 60°F. When the water loop temperature is below the Aquastat set point, the economizer is enabled. The recommended Aquastat set point is 55°F.

VARIABLE FREQUENCY DRIVE PARAMETERS (VAV UNITS)

Refer to Table 12 for parameter specifics.

Table 12 — Variable Frequency Drive Parameters (VAV Units)

ABB ACH 580 VFD — FACTORY DEFAULT SETTING			
Group Number	**Parameter Number**	**Description**	**Value**
10	10.24	RO1 Source	Damper control
	10.27	RO2 Source	Running
	10.30	RO3 Source	Fault (-1)
12	12.19	AI1 Scaled at AI1 Min	0.000
	12.20	AI1 Scaled at AI1 Max	60.000
	12.17	AI1 Min	0.000 -v
	12.18	AI1 Max	10.000 -v
	12.27	AI2 Min	4.000 mA
	12.28	AI2 Max	20.000 mA
	12.26	AI-2 Filter Time	0.100 s
	12.30	AI2 Scaled at Ai2 Max	50.000
13	13.22	AO2 Source	Motor currrent
	13.27	AO2 Source Min	0.0
	13.28	AO2 Source Max	30000.0
	13.29	AO2 Out at AO2 Src Min	4.000 mA
	13.30	AO2 Out at AO2 Src Max	20.000 mA
	13.26	AO2 Filter Time	0.100 s
20	20.01	Ext1 Commands	In1Start
	20.03	Ext1 in1 Source	DI1
	20.21	Direction	Forward
	20.40	Run Permissive	DI1
	20.41	Start Interlock 1	DI4
	20.42	Start Interlock 2	Not used
21	21.01	Start Mode	Automatic
	21.03	Stop Mode	Coast
28	28.11	Ext1 Frequency Ref1	AI1 scaled
	28.15	Ext2 Frequency Ref1	Zero
	28.22	Constant Frequency Sel1	DI3
	28.26	Constant Frequency 1	6.00 Hz
	28.72	Freq Acceleration Time 1	30.000 s
	28.73	Freq Deceleration Time1	30.000 s
30	30.11	Minimum Speed	0.00 rpm
	30.17	Maximum Current	0.00 A
	30.13	Minimum Frequency	0.00 Hz
	30.14	Maximum Frequency	60.00 Hz
31	31.24	Stall Function	No action
	31.27	Stall Frequency Limit	18.00 Hz
	31.28	Stall Time	20 s
	31.20	External Event (1 type)	Fault
	31.14	Number of Trials	0
	31.15	Total Trials Time	30.0 s
	31.16	Delay Time	0.0 s
	31.12	Autoreset Section (overcurrent)	Bit 0
	31.12	Autoreset Selection (overvoltage)	Bit 1
	31.12	Autoreset Selection (undervoltage)	But 2
	31.12	Autoreset Selection (AI supervision fault)	Bit 3
	31.12	Autoreset Selection (External fault 1)	Bit 11
35	35.55	Motor Thermal Time Constant	256 s
	35.51	Motor Load Curve	110%
	35.52	Zero Speed Load	70%
	35.53	Break Point	45.00 Hz
40	40.32	Set 1 Gain	1.00
	40.33	Set 1 Integration Time	10.0 s
	40.31	Set 1 Deviation Inversion	Not inverted (Ref —Fbk)
	40.79	Set 1 Units	User text
	40.16	Set 1 Setpoint 1 Source	Internal setpoint
	40.26	Set 1 Setpoint Min	0.0 PID unit 1
	40.27	Set1 Setpoint Max	200000.00 PID unit 1
	40.57	PID1 Set1/Set2 Selection	PID set1

Table 12 — Variable Frequency Drive Parameters (VAV Units) (cont)

ABB ACH 580 VFD — FACTORY DEFAULT SETTING			
Group Number	**Parameter Number**	**Description**	**Value**
97	97.20	U/F Ratio	Squared
	97.01	Switching Frequency Mode	4 kHz
	97.02	Minimum Switching Frequency	2 kHz
99	96.04	Macro Select	Done
	96.05	Macro Active	HVAC default
	99.04	Motor Control Mode	Scalar
	99.07	Motor Nominal Voltage	Refer to Motor Nameplate.
	99.06	Motor Nominal Current	Refer to Motor Nameplate.
	99.09	Motor Nominal Speed	Refer to Motor Nameplate.
	99.01	Motor Nominal Power	Refer to Motor Nameplate.

START-UP

General

Complete "START-UP CHECKLIST" on page CL-1 before attempting system start-up.

CRANKCASE HEATERS

The 50BVT,V,W, 034-064 units include crankcase heaters. Crankcase heaters are energized as long as there is power to the unit.

Wait 24 hours before starting the compressors to permit warming by the crankcase heaters.

AFTER 24 hours, continue with the procedures below.

CONFIRM THE INPUT POWER PHASE SEQUENCE

The input power phase rotation sequence must be L1-L2-L3= ABC (or forward or clockwise) as indicated with a phase rotation meter. Incorrect input phase rotation will cause the compressors to rotate in reverse, which results in no cooling capacity.

IMPORTANT: On VAV units, fan rotation direction CANNOT be used for the phase sequence check; fan rotation for VAV units with a variable speed drive is independent of the unit input wiring sequence.

If the compressor is rotating in the wrong direction, it may: emit increased noise; shut down due to internal overload protection; have only a small decrease in suction pressure when it starts; or have only a small increase in discharge pressure when it starts. Also, no cooling will be produced at the evaporator. If any of these conditions occurs, refer to the Service section to correct the compressor rotation before continuing.

INTERNAL WIRING

Check all electrical connections in unit control boxes; tighten as required.

RETURN-AIR FILTERS

Check that correct filters are installed in filter racks (see Table 3). Do not operate unit without return-air filters.

COMPRESSOR MOUNTING

Compressors are internally mounted on resilient rubber supports. Do not loosen or remove compressor hold down bolts.

REFRIGERANT SERVICE PORTS

Each refrigerant system has a total of 2 Schrader-type service gauge ports per circuit. One port is located on the suction line, and one on the compressor discharge line. Be sure that caps on the ports are tight.

WATER PIPING

Verify water piping is properly installed and water flow is present prior to operating unit. Check for water leaks and correct as needed.

CV Unit Start-Up

EVAPORATOR FAN

Fan belt and variable pitch motor pulleys are factory-installed. Be sure that fans rotate in the proper direction.

COOLING

Set the space thermostat to OFF position. Turn on unit power. Set space thermostat to COOL and the fan to AUTO. Adjust the thermostat temperature setting below room temperature. Compressor 1 starts on closure of contactor (compressors 1 and 2 on 4-circuit units with 2-stage thermostat).

Adjust the thermostat to an even lower setting until the thermostat energizes Y2 (the second cooling stage). Compressor 2 starts on closure of contactor (compressors 3 and 4 on 4-circuit units with 2-stage thermostat).

Adjust the thermostat temperature to a setting just below room temperature. The second stage of cooling should turn off.

Set the thermostat temperature above room temperature. All compressors and the unit fan should now be off.

Set the thermostat below room temperature and confirm that the compressors and fan turn off.

Sequence of Operation, CV Units — 50BVT,V

IMPORTANT: To exit the hard lockout the controller must be reset from the Y or R terminal by removing the power from the selected terminal. The user can choose which will be the reset point via the DIP switch SW1.

The following sequence of operation applies to constant volume units.

Cooling is initiated when the set point in the remote thermostat is not met (space temperature is higher than set point). The unit sequence of operation is as follows:

Contact closure at the 'G' terminal will provide power to the supply fan contactor energizing the supply fan. The supply fan will be off during unoccupied schedule, depending upon the features of the thermostat used.

The 'O' terminal energizes the reversing valve (heat pump units only). Typically 'Y1' will also be energized at this time for cooling operation. The second stage of cooling 'Y2' will be initialized after a minimum run time and there is a differential from set point plus a deadband or a proportional plus integral calculation based upon demand and length of time space temperature is greater than set point.

Additional assurance is provided by a delay on make timer in the second-stage compressor contactor circuit to avoid dual compressor in-rush starting current.

Heating mode (heat pump models only) follows the same sequence as above except that the reversing valve is not energized.

The UPM sequence of operation illustrated in Fig. 37 applies for both refrigerant circuits. The second compressor is energized 10 seconds after the first if both Y1 and Y2 signals are applied simultaneously.

WATER ECONOMIZER COOLING

The unit diverts condenser inlet waterflow through an optional economizer coil to pre-cool evaporator entering airflow. If the entering water temperature is colder than the setting on the Aquastat and the return-air temperature is warmer than the setting on the return air thermostat, the two-position diverting valve will direct water to the economizer coil.
Economizer water flow is in series with the condensers allowing compressor operation while the economizer is operating.

HOT GAS REHEAT (OPTIONAL)

Terminal H is active in dehumidification mode with hot gas reheat. After a call for H, the reversing valve (O), compressor (Y), and fan (G) are also enabled.

NOTE: Any call for cooling (Y), heating (Y or W), or reversing valve (O) will override dehumidification mode (H).

Y CALL (COOLING OR HEATING)

The UPM will energize the compressor's output (CC) in an event of a "Y" Call from a thermostat or controller (after the random start-up and/or the anti-short cycle delays have elapsed). The Y input terminal must be energized with a 24 vac signal.

REFRIGERANT LEAK DETECTION SYSTEM

The A2L sensor continually samples the air and if the concentration of refrigerant detected is higher than the preset threshold (15% LFL), it sends a signal to the UPM which then switches off the compressor and turns on the blower. The compressor will remain off until saturation level is below 15% LFL. The A2L sensor is connected to the UPM, it must always remain connected. If communication is lost, the UPM will enter refrigerant leak hard lockout fault and energize the alarm contact. To test that the communication between the sensor and board is active, the sensor can be disconnected from the UPM, which should simulate a fault. The A2L sensor for the refrigerant leak detection system shall only be replaced with the part specified on the spare parts list.

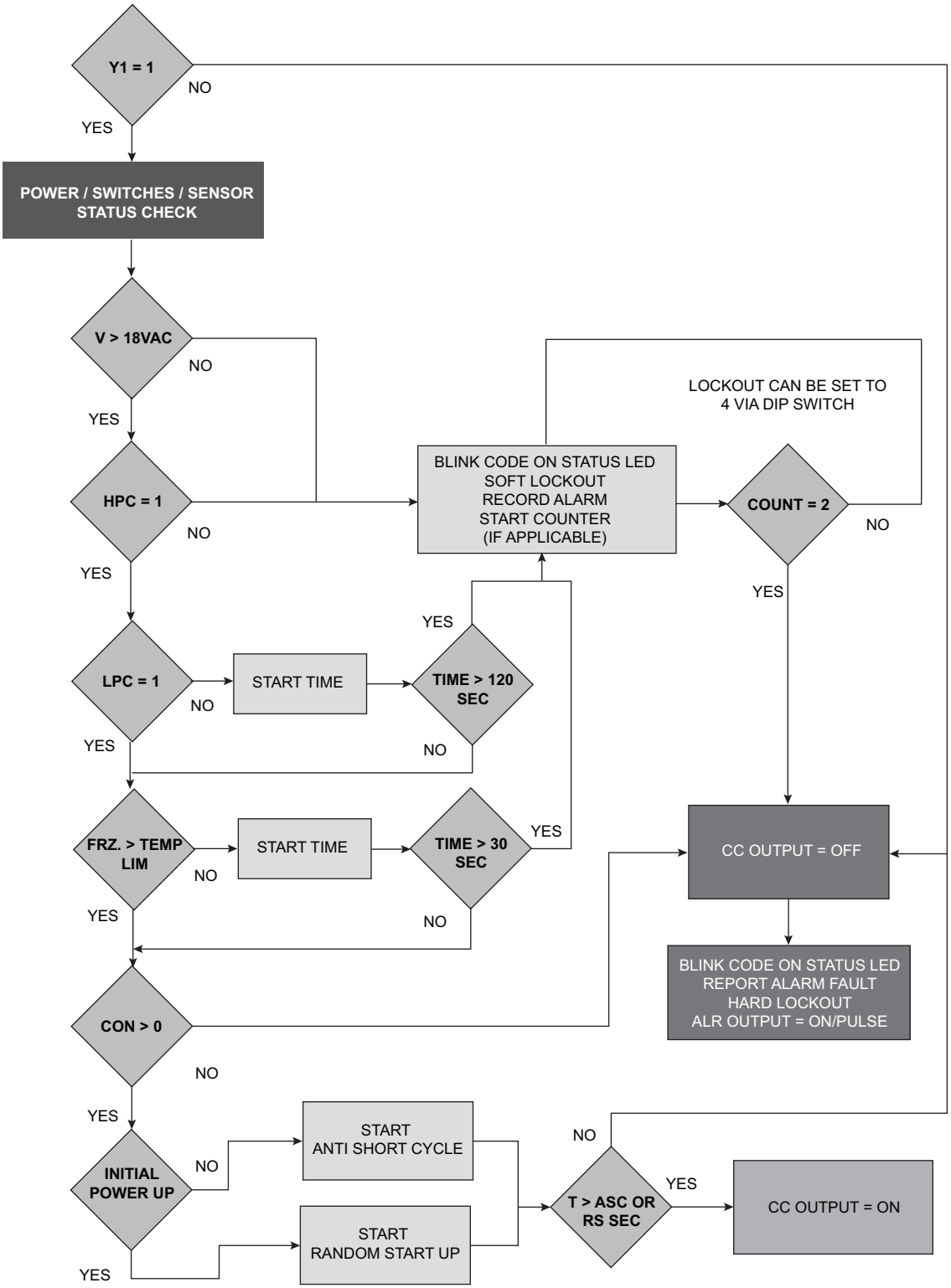

Fig. 37 — UPM Sequence of Operation (SOO) Flow Chart

Sequence of operation for units with SCU Open Controller (VAV Units ONLY)

The SCU Open controller is an integrated component of the Carrier Indoor self-contained unit. The controller utilizes the Carrier UC Open XP and UC Open XP IO expander hardware. Its internal application programming can be configured to operate the indoor self-contained unit as a single-zone unit for space temperature control or as a multi-zone variable air volume unit air source (MZ-VAV). The SCU Open controller allows the unit to operate within the Carrier i-Vu Open network, enabling air and water side linkage or as a standalone unit with monitoring/control from a third-party BACnet building automation system (BAS). Carrier's i-Vu user interface Equipment Touch™ or System Touch™ and the Field Assistant technician tool can be used with the SCU Open controller. Access is available via the local access port or the Rnet communication network. All 50BV units include a unit protection module (UPM) which implements all the unit primary safeties. The SCU Open interfaces with the UPM. For details on the UPM sequence of operation see the UPM section of the installation manual. For complete details on Carrier SCU Open controller please refer to the latest SCU Open Controls, Start-Up, Operation, and Troubleshooting manual.

NOTE: 50BV units utilize face split air coils and should not be operated below 50% of the rated air flow to prevent coil freezing.

SERVICE

⚠ CAUTION

Improper phase sequence will cause scroll compressor failure due to reverse rotation.

Compressor Rotation

To determine whether or not the compressor is rotating in the proper direction:

1. Connect service gauges to suction and discharge pressure fittings.
2. Energize the compressor.
   The suction pressure should drop and the discharge pressure should rise, as is normal on any start-up. If the suction pressure does not drop and the discharge pressure does not rise to normal levels:
3. Turn off power to the unit and tag disconnect.
4. Reverse any 2 of the unit power leads.
   Reapply power to the unit. The suction and discharge pressure levels should now move to their normal start-up levels. Also, check that the fan is rotating in the proper direction.

Incorrect wiring can lead to improper phase sequence resulting in scroll compressor failure due to reverse rotation. Signs of reverse rotation include:

- excessive noise
- reverse rotation of 3 phase indoor fan
- rapid temperature rise on suction tube
- no pressure differential
- no cooling

Correct immediately. Shut off power at disconnect and switch any 2 power leads at unit terminal block or pigtails.

Fan Motor Replacement

If required, replace the fan motor with an equal or better type and efficiency motor with equal horsepower. The motor must be rated for a VFD or inverter application. Do not change the horsepower unless there is a system design requirement change and VFD size analysis.

CHECK/CHANGE VFD OUTPUT CURRENT LIMIT

The VFD provides additional fan motor protection by limiting the output current to a programmed value. This value has been factory set according to the factory-installed motor and VFD sizing options.

If the VFD and/or motor is replaced, the VFD setup mode parameter "tHr1" should be reprogrammed to the following calculated values for optimum motor protection and operating range:

For VFD size about equal to motor:

tHr1 = 100*motor nameplate Amps / VFD rated output Amps

MAINTENANCE

Cleaning Unit Exterior

Unit exterior panels should be wiped down using a damp soft cloth or sponge with a mixture of warm water and a mild detergent.

Coil Cleaning

Hot water, steam, and direct expansion coils must be cleaned at least once a year to maintain peak performance. Dirty coils can contribute to decreased heating or cooling capacity and efficiency, increased operating costs, and compressor problems on direct expansion systems. Dirt, grease, and other oils can also reduce the wettability of the coil surfaces, which can result in moisture blow-off from cooling coils and resulting water leakage problems. If the grime on the surface of the coils becomes wet, which commonly occurs with cooling coils, microbial growth (mold) can result, causing foul odors and health-related indoor air quality problems.

Coils can become dirty over a period of time, especially if air filter maintenance is neglected. Coils should be inspected regularly and cleaned when necessary. Clean coils with a vacuum cleaner, fresh water, compressed air, or a bristle brush (not wire). Do **not** use high-pressure water or air (damage to fins may result). Backflush coil to remove debris. Commercial coil cleaners may also be used to help remove grease and dirt. Steam cleaning is NOT recommended. After cleaning, use a fin comb of the correct fin spacing when straightening mashed or bent coil fins.

Units installed in corrosive environments should be cleaned as part of a planned maintenance schedule. In this type of application, all accumulations of dirt should be cleaned off the coil.

Inspection

Check coil baffles for tight fit to prevent air from bypassing the coil. Check panels for air leakage, particularly those sealing the fan and coil compartments. Check for loose electrical connections, compressor oil levels, proper refrigerant charge, and refrigerant piping leaks. Before start-up, be sure all optional service valves are open.

Air Filters

Inspect air filters every 30 days and replace filters as necessary.

Replacement filters should have a minimum efficiency rating of MERV 6 per ASHRAE rating procedures and be rated for up to 625 fpm velocity. Job requirements or local codes may specify higher minimum ratings.

Condensate Drains

Clean the drain line and unit drain pan at the start of each cooling season. Check flow by pouring water into the drain.

Water-Cooled Condensers

Water-cooled condensers may require cleaning of scale (water deposits) due to improperly maintained closed-loop water systems. Sludge build-up may need to be cleaned in an open tower system due to inducted contaminants.

Local water conditions may cause excessive fouling or pitting of tubes. Condenser tubes should be cleaned at least once a year, or more often if the water is contaminated.

Proper water treatment can minimize tube fouling and pitting. If such conditions are anticipated, water treatment analysis is recommended.

⚠CAUTION

Follow all safety codes. Wear safety glasses and rubber gloves when using inhibited hydrochloric acid solution. Observe and follow acid manufacturer's instructions.

Isolate the supply and return water connections when removing piping to the condenser.

Clean condensers with an inhibited hydrochloric acid solution. The acid can stain hands and clothing and attack concrete, and, without inhibitor, can attack steel. Cover surroundings to guard against splashing. Vapors from vent pipe are not harmful, but take care to prevent liquid from being carried over by gases.

Warm solution acts faster, but cold solution is just as effective if applied for a longer period.

GRAVITY FLOW METHOD

Do not add solution faster than the vent can exhaust the generated gases.

When condenser is full, allow the solution to remain overnight; then drain the condenser and flush with clean water. Follow acid manufacturer's instructions. Refer to Fig. 38.

FORCED CIRCULATION METHOD

Fully open the vent pipe when filling the condenser. The vent may be closed when the condenser is full and the pump is operating.

Regulate the flow to the condenser with a supply line valve. If the pump is the non-overloading type, the valve may be fully closed while the pump is running.

For average scale deposit, allow the solution to remain in the condenser overnight. For heavy scale deposit, allow a full 24 hours. Drain the condenser and flush with clean water. Follow acid manufacturer's instructions. Refer to Fig. 39.

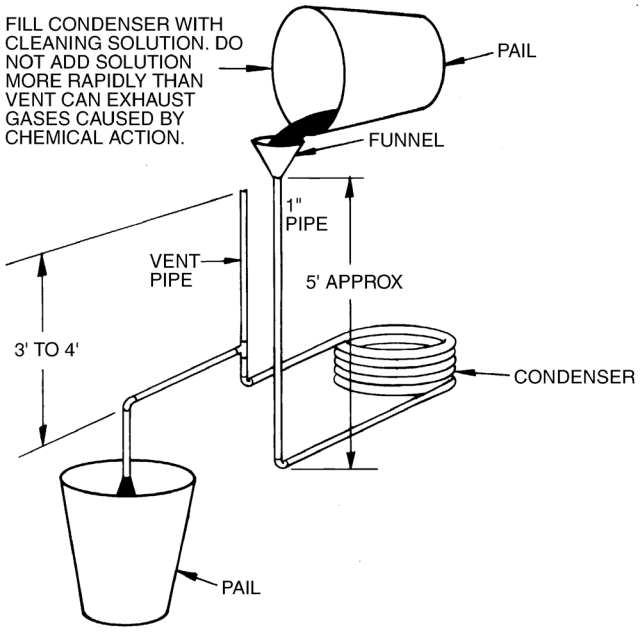

Fig. 38 — Gravity Flow Method

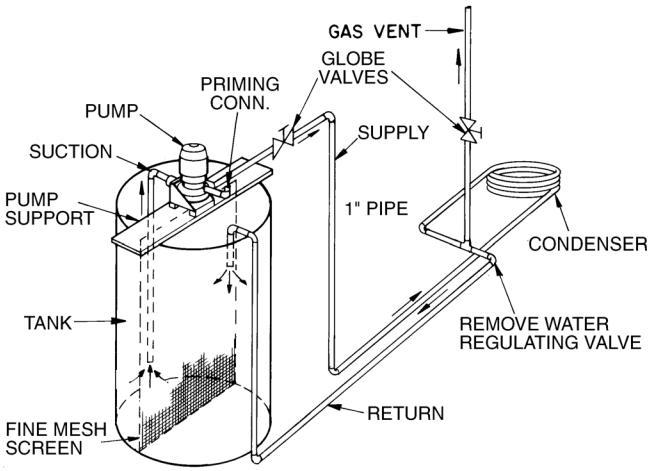

Fig. 39 — Forced Circulation Method

Fan Motor Lubrication

The fan motor was properly lubricated at the time of manufacture. Lubricate the fan motor(s) with SAE-20 (Society of Automotive Engineers) non-detergent electric oil.

IMPORTANT: PILLOW BLOCK STYLE FAN BEARINGS: Bearings have been prelubricated with high quality grease. Bearings must be relubricated once every 6 months or every 2500 hours of operation, whichever comes first.

Fan Bearing Lubrication

Inspect the fan bearings for proper lubrication every 6 month or 2500 hours of operation, whichever comes first. Standard units have grease fittings on the fan shaft bearings, located on each side of the blower wheel. Lubricate bearings with a lithium-based grease (NLGI Grade 2).

Fan Sheaves

Factory-supplied drives are pre-aligned and tensioned; however, it is recommended that the belt tension and alignment be checked before starting the unit. Always check the drive alignment after adjusting belt tension.

To install sheaves on the fan or motor shaft:

1. Isolate power to the unit.
2. Remove side unit access panel(s).
3. Remove any rust-preventive coating on the fan shaft.
4. Make sure the shaft is clean and free of burrs. Add grease or lubricant to bore of sheave before installing.
5. Mount sheave on the shaft; to prevent bearing damage, do not use excessive force.

Each factory-assembled fan, shaft, and drive sheave assembly is precision aligned and balanced. If excessive unit vibration occurs after field replacement of sheaves, the unit should be rebalanced. To change the drive ratio, follow the steps in the Evaporator Fan Performance Adjustment section (page 52).

After 1 to 3 minutes of operation, check the belt tension. Also check tension frequently during the first 24 hours of operation and adjust if necessary. Periodically check belt tension throughout the run-in period, which is normally the initial 72 hours of operation.

ALIGNMENT

Make sure that fan shafts and motor shafts are parallel and level. The most common causes of misalignment are nonparallel shafts and improperly located sheaves. Where shafts are not parallel, belts on one side are drawn tighter and pull more than their share of the load. As a result, these belts wear out faster, requiring the entire set to be replaced before it has given maximum service. If misalignment is in the sheave, belts enter and leave the grooves at an angle, causing excessive belt and sheave wear.

Shaft Alignment

Check shaft alignment by measuring the distance between the shafts at 3 or more locations. If the distances are equal, then the shafts are parallel.

Sheave Alignment

1. To check the location of the fixed sheaves on the shafts, use a straightedge or a piece of string. If the sheaves are properly aligned, the string will touch them at the points indicated by the arrows in Fig. 40. Rotate each sheave a half revolution to determine whether the sheave is wobbly or the drive shaft is bent. Correct any misalignment.
2. With sheaves aligned, tighten cap screws evenly and progressively.
   NOTE: There should be a 1/8 in. to 1/4 in. gap between the mating part hub and the bushing flange. If the gap is closed, the bushing is probably the wrong size.
3. With taper-lock bushed hubs, be sure the bushing bolts are tightened evenly to prevent side-to-side pulley wobble. Check by rotating sheaves and rechecking sheave alignment. When substituting field-supplied sheaves for factory-supplied sheaves, only the motor sheave should be changed.

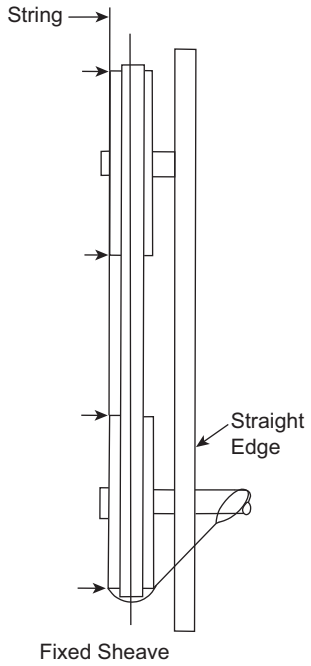

Fig. 40 — Sheave Alignment

Evaporator Fan Performance Adjustment

To change fan speeds from factory settings:

1. Shut off unit power supply.
2. Loosen nuts on the 4 carriage bolts in the mounting base. Using adjusting bolts and plate, slide the motor and remove the belt.
3. Loosen movable-pulley flange setscrew.
4. Screw the movable flange toward the fixed flange to increase speed, and away from the fixed flange to decrease speed. Increasing the fan speed increases the load on the motor. Do not exceed the maximum speed specified in Table 13.
5. Set the movable flange at nearest keyway of the pulley hub and tighten the setscrew. (See Table 13 for speed change for each full turn of pulley flange.)
6. Replace and tighten the belts (see Belt Tension Adjustment section).
7. Restore power to the unit.

To align fan and motor pulleys:

1. Loosen fan pulley setscrews.
2. Slide fan pulley along fan shaft.
3. Make angular alignment by loosening motor from mounting plate.
4. Restore power to unit.

Table 13 — Fan Performance Adjustment[a]

MOTOR HP	MOTOR PULLEY	BLOWER PULLEY	DRIVE PACKAGE (RPM)	MODEL NO. DIGIT 10	208-230-v / 460-v (3 PH 60 Hz)			575-v (3 PH 60 Hz)		
					Motor (rpm)	Blower (min rpm)	Blower (max rpm)	Motor (rpm)	Blower (min rpm)	Blower (max rpm)
7.5	2VP62	2B110	918	F	1766	843	1003	1750	835	994
7.5	2VP75	2B110	1047	R	1766	987	1180	1750	978	1169
7.5	2VP75	2B94	1226	5	1766	1155	1381	1750	1145	1368
10.0	2VP65	2B110	884	G	1768	828	1021	1755	822	1013
10.0	2VP75	2B110	1047	S	1768	988	1181	1755	981	1173
10.0	2VP75	2B94	1226	6	1768	1157	1382	1755	1148	1372
15.0	2VP65	2B110	884	H	1774	831	1024	1770	829	1022
15.0	2VP75	2B110	1047	T	1774	992	1185	1770	990	1183
15.0	2VP75	2B94	1226	7	1774	1161	1387	1770	1158	1384
20.0	2VP65	2B110	884	J	1770	829	1022	1770	829	1022
20.0	2VP75	2B110	1047	U	1770	990	1183	1770	990	1183
20.0	2VP75	2B94	1226	8	1770	1158	1384	1770	1158	1384

NOTE(S):

a. Each full turn of pulley adjustment will change the fan speed by 27-32 rpm.

BELT TENSION ADJUSTMENT

Using a gauge, apply 4 lb of force to the center of the belt and adjust the tension until a deflection of 1/64 in. is achieved for every inch of shaft center distance. See Fig. 41.

Ideal belt tension is the lowest value under which belt slip will not occur at peak load conditions.

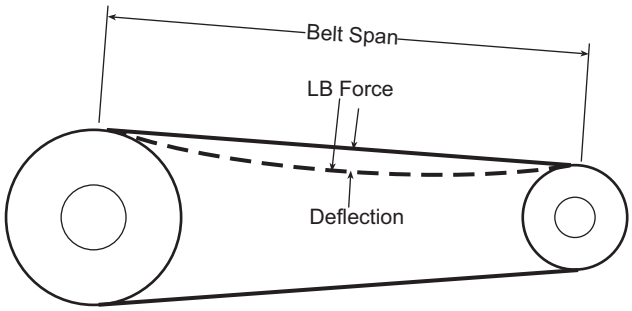

Fig. 41 — Fan Belt Tension

TROUBLESHOOTING

Unit Protection Module (UPM)

All 50BV are equipped with a 24-v low voltage control circuit. Units are selectable to be provided with no controls for control via a field installed thermostat, or third party DDC, or to be provided with a factory installed Carrier i-Vu DDC for advanced equipment control and monitoring. Regardless of the selection all units will be equipped with a unit protection module. The UPM board should be one of the first areas to start with troubleshooting an equipment issue. See Fig. 33. Refer to Step 7 — "Configure Unit Control Components" on page 42 for UPM configuration and Alarms.

See Table 14 for unit troubleshooting.

Table 14 — Unit Troubleshooting

PROBLEM	POSSIBLE CAUSE	CORRECTION PROCEDURE
Unit Will Not Start.	Loss of unit power.	Check power source. Check fuses, circuit breakers, disconnect switch. Check electrical contacts.
	Unit voltage not correct	Check and correct.
	Open fuse	Check for short circuit in unit.
	Open protection device	Check relays (phase monitor option), contacts, pressure switches.
	Unit or motor contactor out of order	Test and replace if necessary.
Fan Does Not Operate.	Contactor or relay overload or out of order	Test and replace if necessary.
	VFD not running	Confirm VFD parameters set.
	Motor defective	Test and replace if necessary.
	Broken belt	Replace belt.
	Loose electrical contact	Tighten contact.
Compressor is Noisy, But Will Not Start.	Under voltage	Check and correct.
	Defect in compressor motor	Replace compressor.
	Missing phase	Check and correct.
	Compressor seized	Check and replace if necessary.
Compressor Starts, But Does Not Continue to Run.	Compressor or contact defect	Test and replace if necessary.
	Unit is under charged	Check and correct any leaks. Add refrigerant.
	Unit is too big	Check load calculation.
	Compressor is overloaded	Check protection device and replace. Check for missing phase. Check TXV. Check temperature in suction discharge line.
Unit is Noisy.	Compressor noise	Check TXV and replace if necessary. Compressor rotation incorrect; check and correct. Check internal noise.
	Tube vibration or condenser water problem	Check and correct.
	Unit panel or part vibrating	Check and tighten appropriate part.
Unit Runs Continuously, But Has Low Capacity.	Unit is too small	Check load calculation.
	Low refrigerant or non-condensing gas present	Check for leaks and add refrigerant or gas as necessary.
	Compressor defect	Check pressure and amps. Replace if necessary.
	Insufficient flow of refrigerant in evaporator	Check filter drier and replace if necessary. Check TXV and adjust or replace if necessary. Check position of TXV bulb and equalizer.
	Oil in evaporator	Drain evaporator.
	Low airflow	Check filters, and clean or replace as necessary. Check coils, and clean as necessary. Check for restrictions in ductwork. Check fan rotation and adjust. Check fan motor. Check belts for wear.
High Discharge Pressure.	Low waterflow in condenser	Purge air.
	Dirty condenser tubes.	Clean condenser.
	High temperature in condenser water	Check water tower fans and pumps.
	Overcharged	Check and reclaim excess charge. Adjust subcooling.
	Non-condensing gas present	Verify and correct.

LEGEND
TXV — Thermostatic Expansion Valve
VFD — Variable Frequency Drive

© 2025 Carrier

START-UP CHECKLIST

(Fill out this form on Start-Up and file in job folder)

NOTE: To avoid injury to personnel and damage to equipment or property when completing the procedures listed in this start-up checklist, use good judgment, follow safe practices, and adhere to the safety considerations/information as outlined in preceding sections of this Installation, Start-Up, Service and Controls Operation and Troubleshooting document.

I. PRELIMINARY INFORMATION:

50BV UNIT: MODEL NO. _____ SERIAL NO. _____

START-UP DATE: _____

II. PRE-START-UP:

VERIFY ALL SHIPPING MATERIALS HAVE BEEN REMOVED FROM THE UNIT

IS THERE ANY DAMAGE? _____ IF SO, WHERE _____

_____

WILL THIS DAMAGE PREVENT UNIT START-UP? (Y/N) _____

CHECK POWER SUPPLY. DOES IT AGREE WITH UNIT? (Y/N) _____

HAS THE GROUND WIRE BEEN CONNECTED? (Y/N) _____

HAS THE CIRCUIT BREAKER AND DISCONNECT BEEN SIZED AND INSTALLED PROPERLY? (Y/N) _____

ARE THE POWER WIRES TO THE UNIT SIZED AND INSTALLED PROPERLY? (Y/N) _____

HAS THE CORRECT INPUT POWER PHASE SEQUENCE BEEN CONFIRMED WITH A METER? (Y/N) _____

HAS THE FAN AND MOTOR PULLEY BEEN CHECKED FOR PROPER ALIGNMENT AND DOES THE FAN BELT HAVE PROPER TENSION? (Y/N) _____

HAS WATER BEEN PLACED IN DRAIN PAN TO CONFIRM PROPER DRAINAGE? (Y/N) _____

ARE PROPER AIR FILTERS IN PLACE AND CLEAN? (Y/N) _____

VERIFY THAT THE UNIT IS INSTALLED WITHIN LEVELING TOLERANCES (Y/N) _____

CONTROLS

(CV ONLY) HAS THE THERMOSTAT BEEN INSTALLED AND VERIFIED TO BE OPERATIONAL? (Y/N) _____

(VAV ONLY) HAS THE DUCT STATIC PRESSURE PROBE BEEN INSTALLED? (Y/N) _____

HAVE CONTROL CONNECTIONS BEEN MADE AND CHECKED? (Y/N) _____

ARE ALL WIRING TERMINALS (including main power supply) TIGHT? (Y/N) _____

(VAV ONLY) HAS THE SUPPLY AIR TEMPERATURE AND RETURN AIR TEMPERATURE SENSORS BEEN INSTALLED? (Y/N) _____

HAS THE UNIT CONTROL SYSTEM INTERFACE BEEN PROVIDED (VIRTUAL BACVIEW)? (Y/N) _____

PIPING

HAVE LEAK CHECKS BEEN MADE AT COMPRESSOR, CONDENSER, EVAPORATOR, TXVs (Thermostatic Expansion Valves), SOLENOID VALVES, FILTER DRIERS, AND FUSIBLE PLUGS WITH A LEAK DETECTOR? (Y/N) _____

HAVE WATER AND STEAM VALVES BEEN OPENED (to fill piping and heat exchangers)? (Y/N) _____

HAS AIR PURGE BEEN PERFORMED? (Y/N) _____

HAS THE WATER PIPING BEEN CHECKED FOR LEAKS AND VALVE OPERATION VERIFIED (Y/N) _____

HAS THE CONDENSER FLUID BEEN CHECKED FOR PROPER FLOW AND CONCENTRATION (Y/N) _____

DUCTWORK

HAS THE DUCTWORK BEEN PROPERLY INSTALLED WITH A PAIR OF PANTS (DUAL FAN UNITS) (Y/N) _____

(VAV ONLY) ARE ALL ZONE DAMPERS INSTALLED AND VERIFIED TO BE OPERATIONAL (Y/N) _____

ELECTRICAL

CHECK VOLTAGE IMBALANCE

LINE-TO-LINE VOLTS: AB _____ V AC _____ V BC _____ V

(AB + AC + BC)/3 = AVERAGE VOLTAGE = _____ V

MAXIMUM DEVIATION FROM AVERAGE VOLTAGE = _____ V

VOLTAGE IMBALANCE = 100 X (MAX DEVIATION)/(AVERAGE VOLTAGE) = _____ % (IF OVER 2% VOLTAGE IMBALANCE, DO NOT ATTEMPT TO START SYSTEM; CALL LOCAL POWER COMPANY FOR ASSISTANCE.)

III. START-UP:

CHECK FAN SPEED AND RECORD. _____

AFTER AT LEAST 15 MINUTES RUNNING TIME, RECORD THE FOLLOWING MEASUREMENTS:

	CIRCUIT 1	CIRCUIT 2	CIRCUIT 3	CIRCUIT 4
SUCTION PRESSURE				
SATURATED SUCTION TEMP				
SUCTION LINE TEMP				
SUPERHEAT DEGREES				
DISCHARGE PRESSURE				
SATURATED CONDENSING				
LIQUID LINE TEMP				
SUBCOOLING DEGREES				
LIQUID SIGHT GLASS (CLEAR/BUBBLES)				
ENTERING CONDENSER-WATER TEMP				
LEAVING CONDENSER-WATER TEMP				
EVAP ENTERING-AIR DB (dry bulb) TEMP				
EVAP ENTERING-AIR WB (wet bulb) TEMP				
EVAP LEAVING-AIR DB TEMP				
EVAP LEAVING-AIR WB TEMP				
HOT GAS BYPASS SETTING				

COMPRESSOR AMPS:

L1				
L2				
L3				

SUPPLY FAN AMPS:

L1		
L2		
L3		

NOTES: _____

_____

CUT ALONG DOTTED LINE

CUT ALONG DOTTED LINE

© 2025 Carrier