Installation Instructions

Part Nos. 30GX900071, 30GX900072, 30GX900073, 30GX900074, 30GX900075 and 30GX900076

CONTENTS

Page
SAFETY CONSIDERATIONS 1
GENERAL 1,2
Check Package Contents 1
APPLICATION NOTES 2, 3
Winter Start 3
INSTALLATION 3-21
Step 1 — Install Wind Baffles 3
- WIND BAFFLE REQUIREMENTS
- COOLER AND OIL SEPARATOR SIDE ASSEMBLY

Step 2 — Configure Motormaster V Control 12
Step 3 — Mount Motormaster V Control(s) 12
Step 4 — Make Electrical Connections 12
- 30GXN,R080-150, 160 (and Associated Modular Units)
- 30GXN,R153, 163-205, 225, 249, 264 (and Associated Modular Units)
- 30GXN,R208, 228, 253, 268, 281-350 (and Associated Modular Units)

Step 5 — Configure Unit for Motormaster V Operation 18
Step 6 — Test the Motormaster V Control Output 18
TROUBLESHOOTING 22,23

SAFETY CONSIDERATIONS

Installation, start-up, and service of this equipment can be hazardous due to system pressures, electrical components, and equipment location (roofs, elevated structures, etc.).

Only trained, qualified installers and service technicians should install, start up, and service this equipment.

When working on this equipment, observe precautions in the literature and on tags, stickers, and labels attached to the equipment and any other safety precautions that may apply.

⚠ WARNING

Open and lockout all remote disconnects before servicing this equipment. Electrical shock could result in personal injury.

GENERAL

This book contains instructions for the installation and start-up of the Motormaster V control on chiller models 30GXN,R080-528. This control cannot be used on units that have the high-static fan option.

The Motormaster V control is a motor speed control device which adjusts condenser fan motor speed in response to declining saturated condensing temperatures. A properly applied Motormaster V control extends the operating range of air-conditioning systems and permits operation at lower outdoor ambient temperatures.

The ambient temperature at which the 30GXN,R080-150, 160 and associated modular units operate without modification is 0° F (–18 C). The minimum ambient temperature at which the 30GXN,R153,163-350 and associated modular units operate without modification is 15 F (–9 C). To operate these units below the ambient temperatures listed, Motormaster V controls (Fig. 1) must be added. Field-installed wind baffles are also required on all units for operation below 32 F (0° C). See Step 1. The Motormaster V control permits operation of the unit to an ambient temperature of –20 F (–29 C). The control regulates the speed of 3-phase fan motors that are compatible with the control.

See Tables 1 and 2 for the Motormaster V control accessory package contents and applicable voltages. Because the control is compatible with the factory-installed fan motors on all units, replacement of the motor is not necessary. It is not necessary to replace the fan blades for any of the units. The Motormaster V control must be field wired.

Check Package Contents — Inspect the contents of this accessory package before installing. File a claim with the shipper if you find shipping damage or if a part is missing.

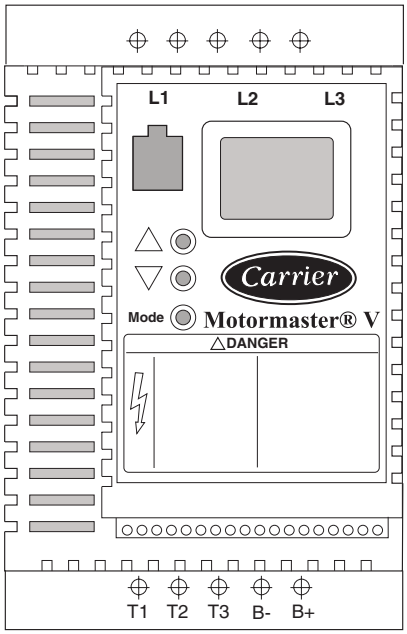

Fig. 1 — Motormaster V Control

Table 1 — Motormaster® V Control Package Contents

30GXN,R UNIT SIZE*	MOTORMASTER V PART NO.	APPLICATION VOLTAGE	ITEM QTY	ITEM DESCRIPTION	ITEM PART NO.
080-150,160	30GX-900---071	575-3-60	1	Speed Controller, 5 HP	HR46TN006
			1	Fuse Block MM-F	HY11UT035
			3	Fuse (Class CC, 15 amp)	HY10KB151
			6	16 AWG, 24″ long wires	—
			2	16 AWG, 43″ long wires	—
			2	16 AWG, 50″ long wires	—
			3	16 AWG, 30″ long wires	—
			2	Auxiliary Contacts	3RH19212DE11
	30GX-900---072	208/230-3-60 230-3-50	1	Speed Controller, 5 HP	HR46TN004
			1	Fuse Block MM-F	HY11UT035
			3	Fuse (Class CC, 30 amp)	HY10KB300
			6	14 AWG, 24″ long wires	—
			2	16 AWG, 43″ long wires	—
			2	16 AWG, 50″ long wires	—
			3	14 AWG, 30″ long wires	—
			2	Auxiliary Contacts	3RH19212DE11
	30GX-900---073	460-3-60, 380-3-60, 380/415-3-50	1	Speed Controller, 5 HP	HR46TN005
			1	Fuse Block MM-F	HY11UT035
			3	Fuse (Class CC, 20 amp)	HY10KB200
			6	16 AWG, 24″ long wires	—
			2	16 AWG, 43″ long wires	—
			2	16 AWG, 50″ long wires	—
			3	16 AWG, 30″ long wires	—
			2	Auxiliary Contacts	3RH19212DE11
153,163-350	30GX-900---074	575-3-60	2	Speed Controller, 5 HP	HR46TN006
			2	Fuse Block MM-F	HY11UT035
			6	Fuse (Class CC, 15 amp)	HY10KB151
			3	16 AWG, 65″ long wires	—
			8	16 AWG, 50″ long wires	—
			3	16 AWG, 35″ long wires	—
			6	16 AWG, 30″ long wires	—
			4	16 AWG, 43″ long wires	—
			2	16 AWG, 70″ long wires	—
			4	Auxiliary Contacts	3RH19212DE11
			1	Mounting bracket	30GX505254
	30GX-900---075	208/230-3-60 230-3-50	2	Speed Controller, 5 HP	HR46TN004
			2	Fuse Block MM-F	HY11UT035
			6	Fuse (Class CC, 30 amp)	HY10KB300
			3	14 AWG, 65″ long wires	—
			6	14 AWG, 50″ long wires	—
			3	14 AWG, 35″ long wires	—
			6	14 AWG, 30″ long wires	—
			2	16 AWG, 43″ long wires	—
			2	16 AWG, 50″ long wires	—
			2	16 AWG, 70″ long wires	—
			3	Auxiliary Contacts	3RH19212DE11
			1	Mounting bracket	30GX505254
	30GX-900---076	460-3-60, 380-3-60, 380/415-3-50	2	Speed Controller, 5 HP	HR46TN005
			2	Fuse Block MM-F	HY11UT035
			6	Fuse (Class CC, 20 amp)	HY10KB200
			3	16 AWG, 65″ long wires	—
			8	16 AWG, 50″ long wires	—
			3	16 AWG, 35″ long wires	—
			6	16 AWG, 30″ long wires	—
			4	16 AWG, 43″ long wires	—
			2	16 AWG, 70″ long wires	—
			4	Auxiliary Contacts	3RH19212DE11
			1	Mounting bracket	30GX505254

LEGEND
AWG — American Wire Gage

*And associated modular sizes.

Table 2 — Approved Motors

UNIT 30GXN,R*	VOLTAGE	MOTORMASTER V MOTOR (Qty)
080-150, 160	575-60 Hz	HD56AK576 (2)
	208/230-50/60 Hz	HD56AK653 (2)
	380-60 Hz	HD56AK380 (2)
	460-60 Hz, 400-50 Hz	HD56AK653 (2)
153, 163-350	575-60 Hz	HD56AK576 (4)
	208/230-50/60 Hz	HD56AK653 (4)
	380-60 Hz	HD56AK380 (4)
	460-60 Hz, 400-50 Hz	HD56AK653 (4)

*And associated modular sizes.

APPLICATION NOTES

Corrosion-inhibited antifreeze solution approved for 30GXN,R chiller use must be added to the cooler fluid loop to protect it to temperatures 15° F (8.3° C) below the lowest expected outdoor temperature.

Widely varying cooling loads are often encountered during low ambient temperature operation of the 30GXN,R chiller. To minimize compressor cycling as a result of these conditions, provide sufficient volume in the chiller fluid loop, adding a properly baffled storage tank to the system if necessary. At least 6 gal per ton (6.5 L per kW) of refrigeration are recommended for a moderate system load. Installation of the minimum load valve accessory is required for use with the Motormaster V control.

⚠ CAUTION

Operation at low ambient temperature is not recommended if the minimum load on the 30GXN,R chiller is below its minimum step of capacity. Unstable operation may result. See Table 3.

Table 3 — Minimum Capacity Step (%) — 30GXN,R — 50/60 Hz

UNIT 30GXN,R	STANDARD UNIT	STANDARD UNIT WITH ACCESSORY MINIMUM LOAD CONTROL
080-178	20%	10%
204-268	15%	10%
281-353	10%	5%
370,373,393,415,418,475,478	8%	4%
390	7%	3.5%
410,440,450,453,470,495,500, 503,520,525,528	7.5%	3%

Winter Start — All 30GXN,R chillers have winter start features included in their microprocessor control logic. No additional provisions are necessary.

INSTALLATION

⚠ CAUTION

To avoid the possibility of electrical shock, open and lock out all disconnects before installing or servicing this accessory.

Step 1 — Install Wind Baffles — Wind baffles must be installed on all units to ensure proper cooling cycle operation at low-ambient temperatures with Motormaster V controls. Wind baffles are not included with the accessory package and must be ordered separately or field-fabricated.

WIND BAFFLE REQUIREMENTS — If field fabricating baffles, use 16-gage galvanized sheet metal or similar corrosion-resistant sheet metal for the panels and supports. Installing wind baffles on a unit requires hoods on both sides of the unit, but not on the end. See Table 4 for the part number required for each size unit if ordering the accessory package. See Table 5 for wind baffle requirements if field fabrication is desired. See Fig. 2 (Top Panel), Fig. 3 (Side Panel), and Fig. 4 (Support Bracket) for field fabrication drawings. See Fig. 5A-5H for unit assembly information. See Table 6 for unit duplex size combinations.

Table 4 — Wind Baffle Part Numbers

30GXN,R UNIT SIZE*	SIDE OF UNIT	QTY	PART NO.
080, 090	Both Sides	2	30GX900016
083, 093-115, 125,135	Both Sides	2	30GX900017
118, 128, 138, 150, 160	Both Sides	2	30GX900018
153, 174, 175, 204, 205, 225	Both Sides	2	30GX900019
163, 178, 249, 250, 264	Both Sides	2	30GX900020
208, 228	Both Sides	2	30GX900030
253, 268-350	Both Sides	2	30GX900039

*And associated modular sizes.

NOTE: The unit has the necessary holes pre-drilled to accept the screws that come in the accessory package. The exception is the attachment location for the top of the support bracket. Holes must be drilled on the top edge of the unit to accept the top of the support bracket. The support bracket must be vertical for the panels to fit properly. When installing this accessory, use the screws supplied with the accessory kit. Refer to Fig. 6 and 7 for support mounting details.

NOTE: When the accessory kit is properly installed, the insulated side of each panel faces the unit.

⚠ CAUTION

To avoid damaging the condenser coil and releasing refrigerant to the atmosphere, use care when drilling holes in unit support members.

Table 5 — Wind Baffle Part Requirements

30GXN,R UNIT SIZE*	DESCRIPTION†	QTY
080, 090	Top Panel (45.09 in.)	12
	Side Panel	24
	Support Bracket	2
083, 093-115, 125, 135	Top Panel (54.09 in.)	12
	Side Panel	24
	Support Bracket	2
118, 128, 138, 150, 160	Top Panel (54.09 in.)	12
	Top Panel (31.24 in.)	6
	Side Panel	36
	Support Bracket	4
153, 174, 175, 204, 205, 225	Top Panel (54.09 in.)	12
	Top Panel (45.09 in.)	12
	Side Panel	48
	Support Bracket	6
163, 178, 249, 250, 264	Top Panel (54.09 in.)	6
	Top Panel (45.09 in.)	18
	Top Panel (40.20 in.)	6
	Side Panel	48
	Support Bracket	6
208, 228	Top Panel (57.12 in.)	24
	Top Panel (37.1 in.)	6
	Side Panel	60
	Support Bracket	8
253, 268-350	Top Panel (57.12 in.)	12
	Top Panel (73.62 in.)	12
	Top Panel (40.20 in.)	6
	Side Panel	60
	Support Bracket	8

*And associated modular sizes. Refer to Table 6 for modular size combinations.
†The dimension shown in parentheses is the "X" length dimension shown in Fig. 2.

Table 6 — 30GXN,R Modular Combination Sizes

SIZE 30GXN,GXR	MODULE A	MODULE B
283 (60 Hz & 50 Hz)	153	138
303 (60 Hz & 50 Hz)	163	138
328 (60 Hz & 50 Hz)	178	153
353 (60 Hz & 50 Hz)	178	178
370 (60 Hz only)	225	150
373 (60 Hz & 50 Hz)	253	138
390 (60 Hz only)	264	135
393 (60 Hz & 50 Hz)	253	153
410 (50 Hz only)	225	205
415 (60 Hz only)	264	160
418 (60 Hz & 50 Hz)	268	153
440 (50 Hz only)	225	225
450 (60 Hz only)	225	225
453 (60 Hz & 50 Hz)	228	228
470 (50 Hz only)	250	225
475 (60 Hz only)	249	225
478 (60 Hz & 50 Hz)	253	228
495 (50 Hz only)	250	250
500 (60 Hz only)	249	249
503 (60 Hz & 50 Hz)	253	253
520 (50 Hz only)	264	264
525 (60 Hz only)	264	264
528 (60 Hz & 50 Hz)	268	268

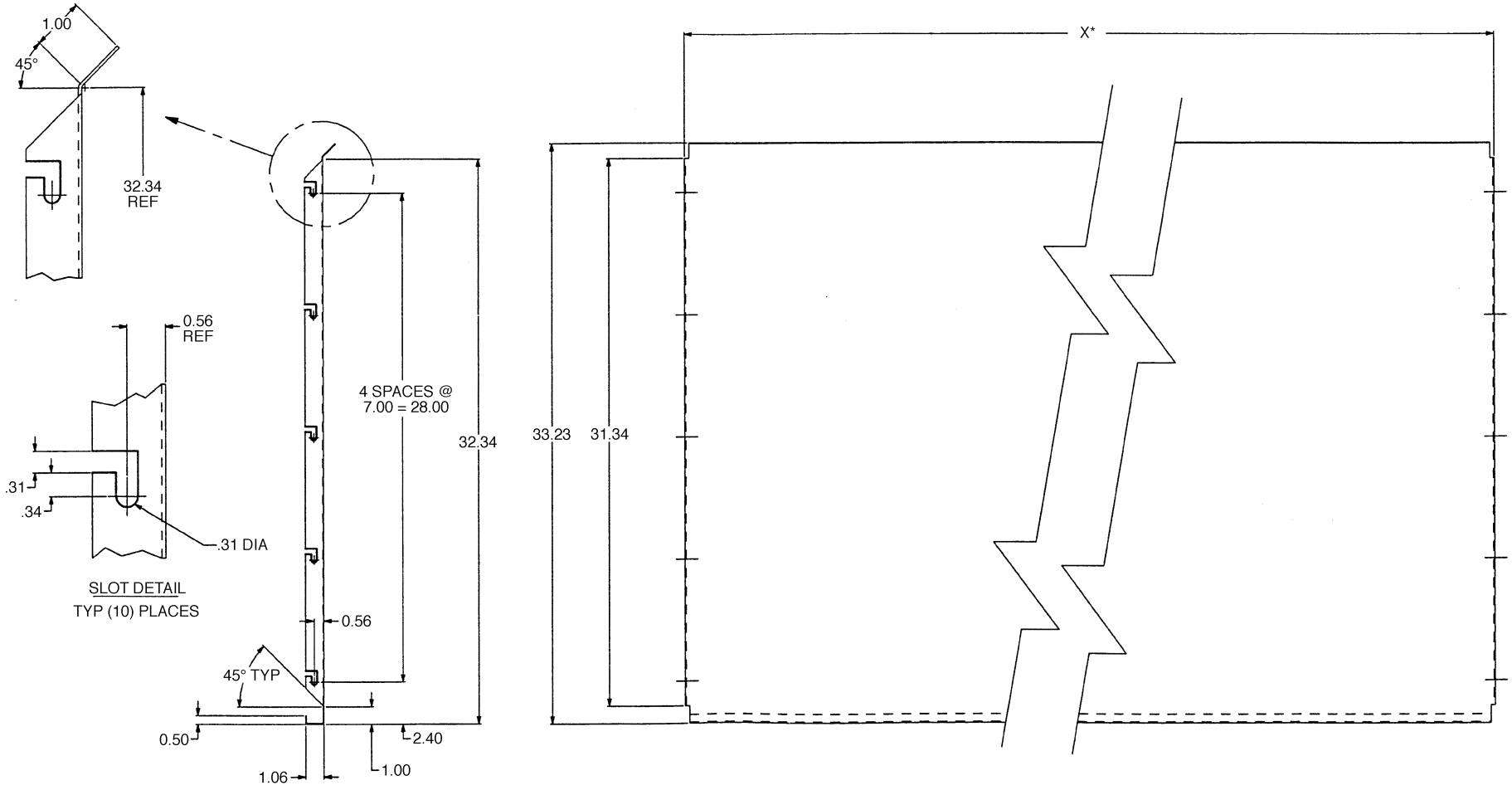

*See Table 5.
NOTE: All dimensions are in inches.

Fig. 2 — Top Panel

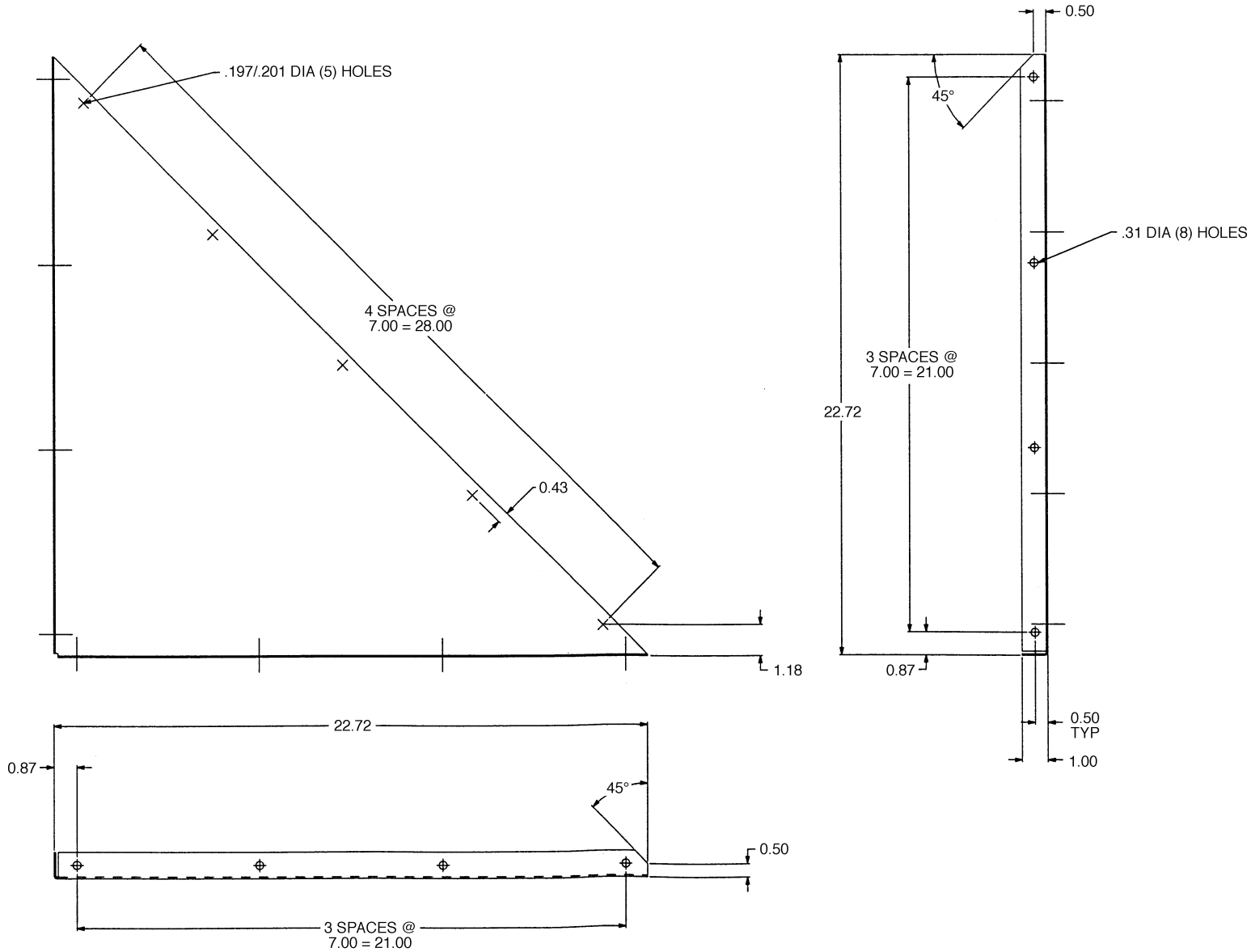

NOTE: All dimensions are in inches.

Fig. 3 — Side Panel

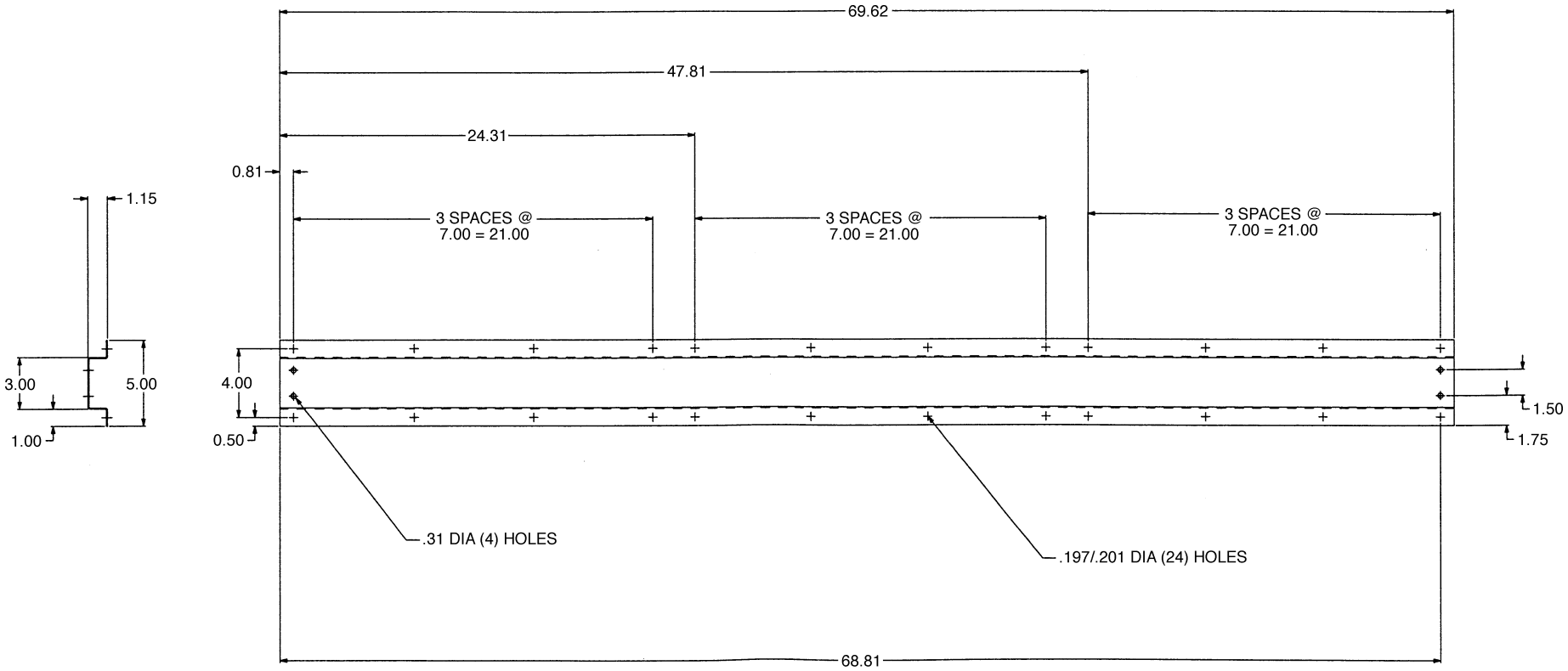

NOTE: All dimensions are in inches.

Fig. 4 — Support Bracket

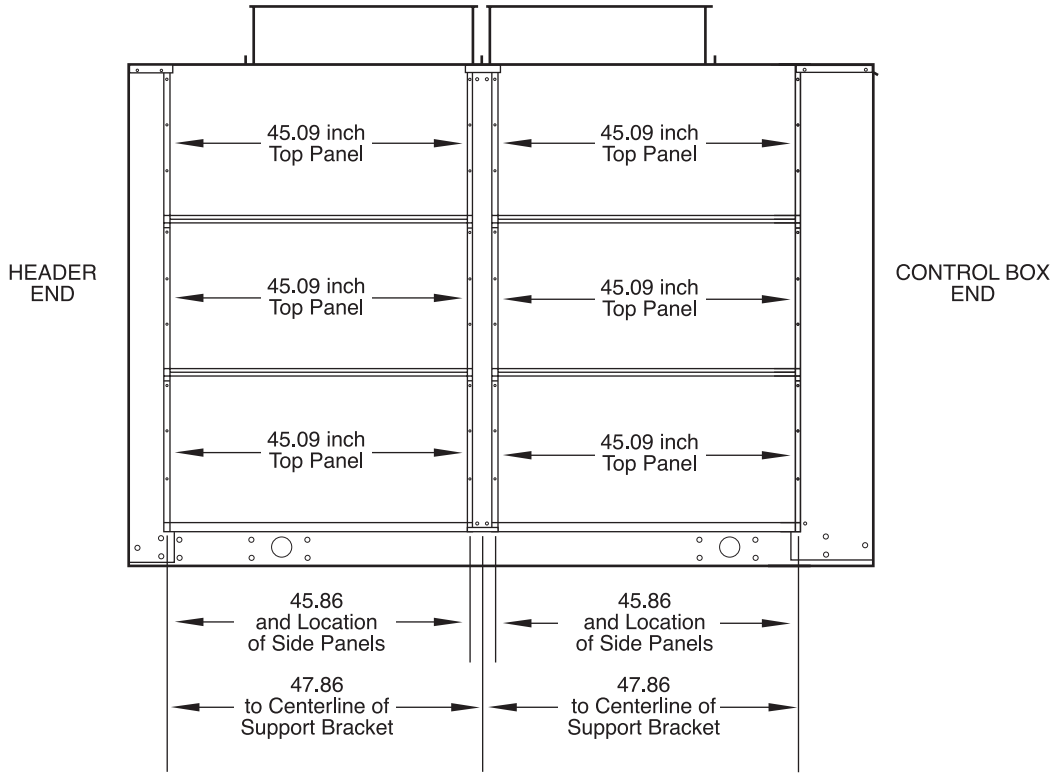

NOTE: All dimensions are in inches.

Fig. 5A — Unit Assembly, 30GXN,R080,090 — Both Sides

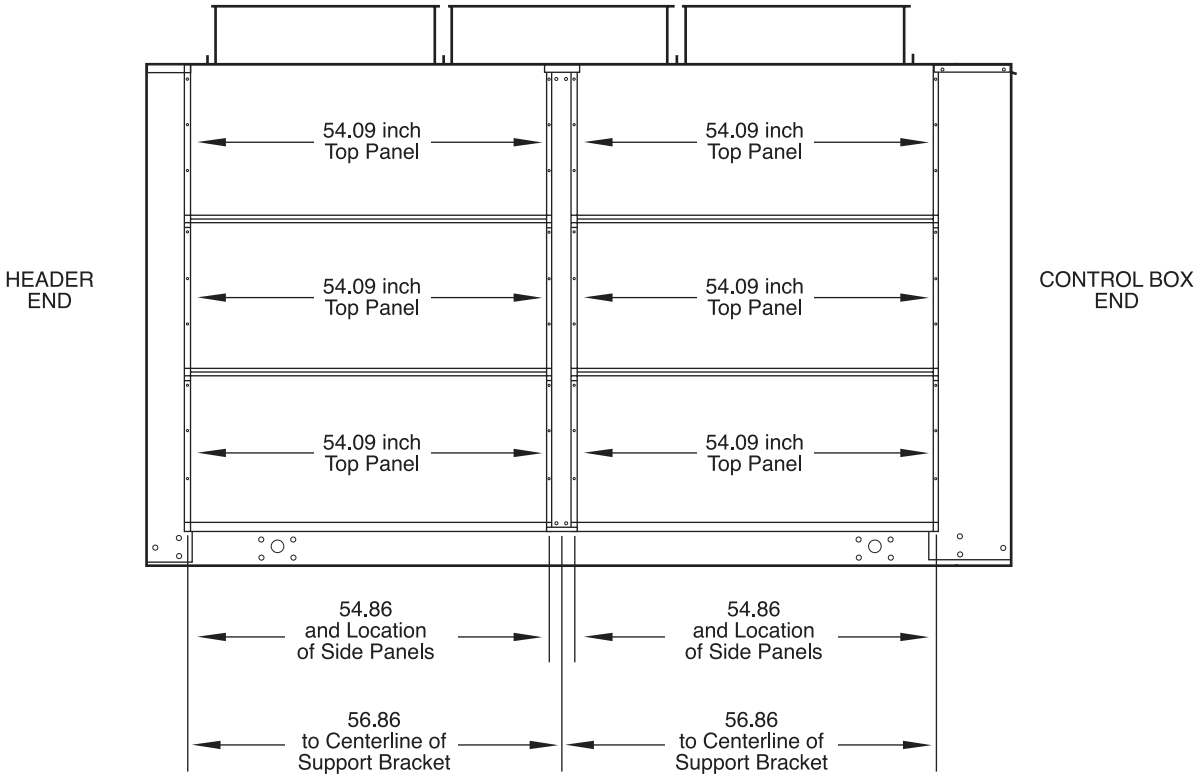

NOTES:
1. All dimensions are in inches.
2. Refer to Table 6 for modular size combinations.

Fig. 5B — Unit Assembly, 30GXN,R083,093-115,125,135 and Associated Modular Units — Both Sides

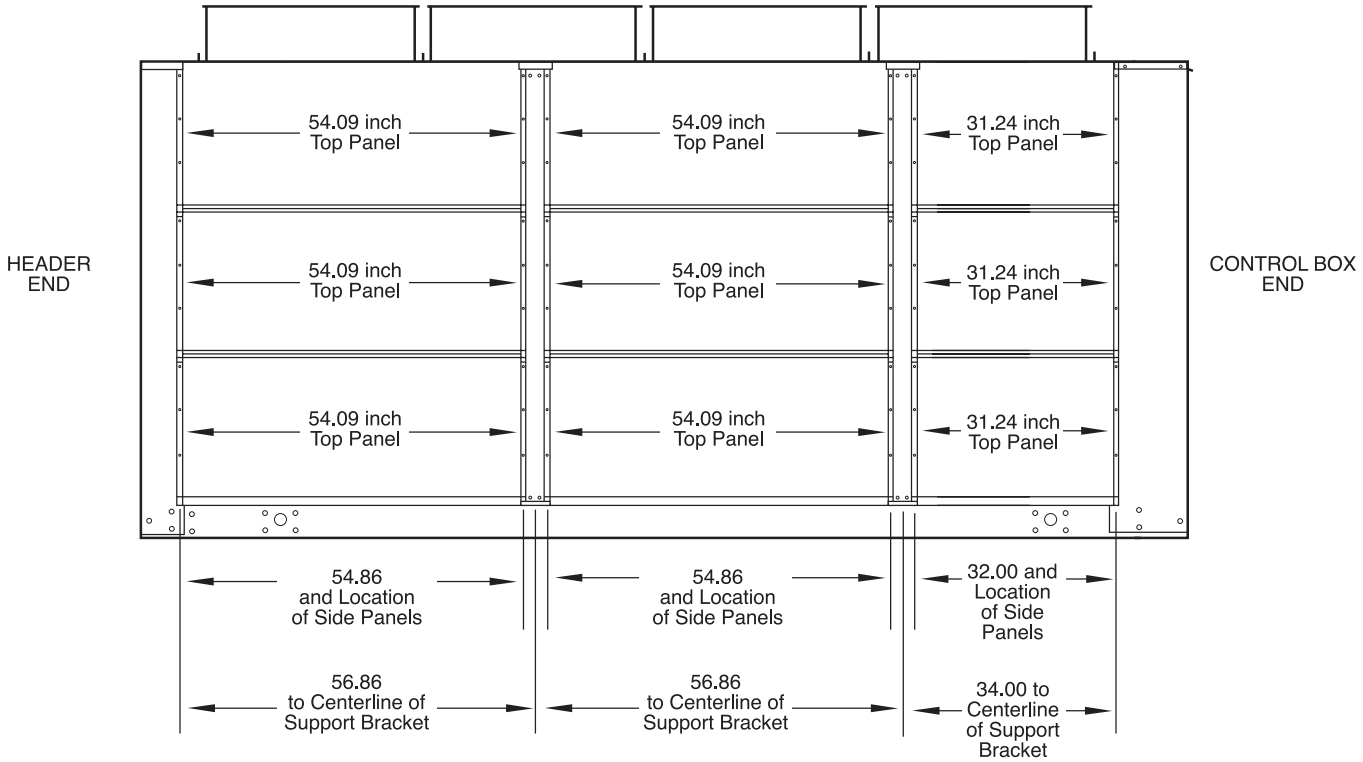

NOTES:
1. All dimensions are in inches.
2. Refer to Table 6 for modular size combinations.

Fig. 5C — Unit Assembly, 30GXN,R118,128,138,150,160 and Associated Modular Units — Both Sides

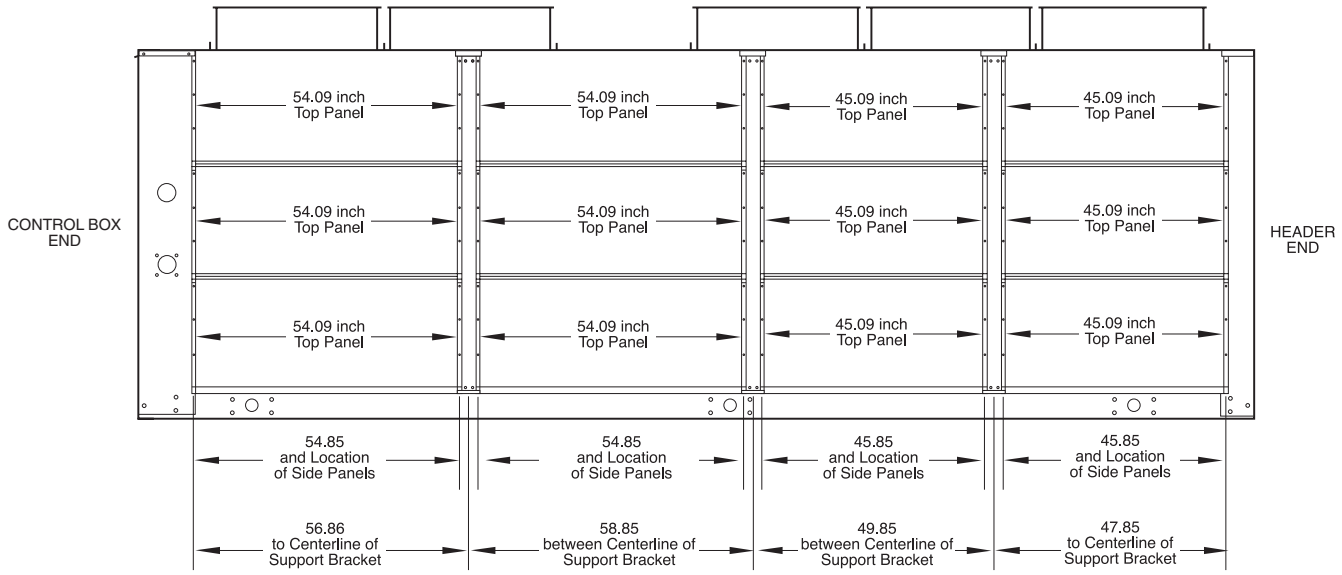

NOTES:
1. All dimensions are in inches.
2. Refer to Table 6 for modular size combinations.

Fig. 5D — Unit Assembly, 30GXN,R153,174,175,204,205,225 and Associated Modular Units — Both Sides

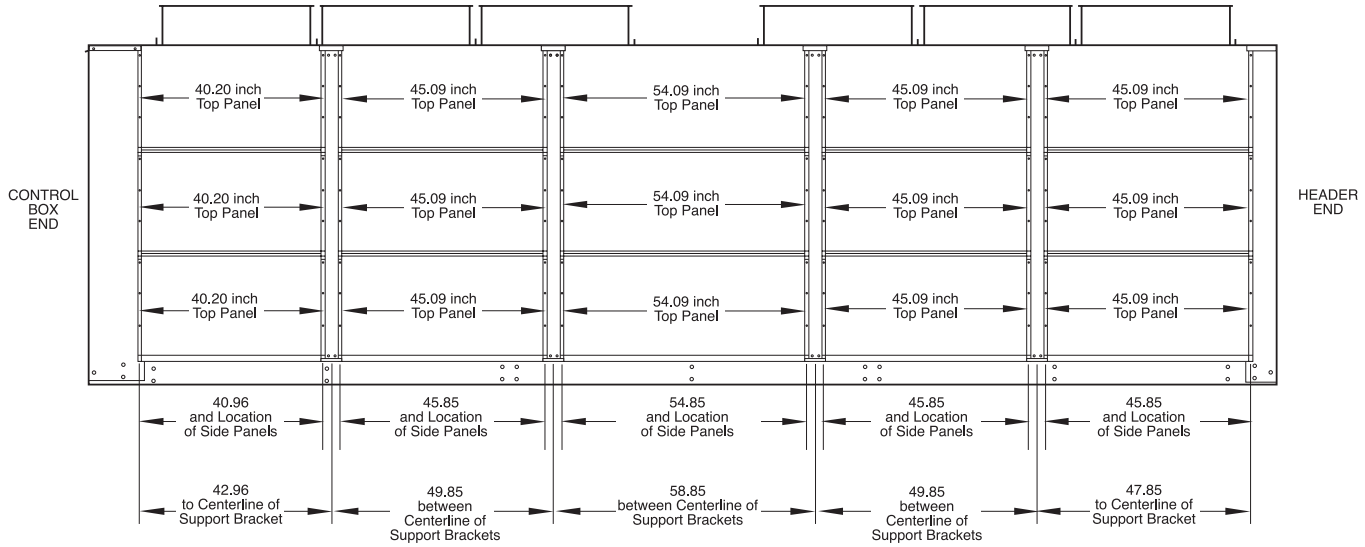

NOTES:
1. All dimensions are in inches.
2. Refer to Table 6 for modular size combinations.

Fig. 5E — Unit Assembly, 30GXN,R163,178 and Associated Modular Units — Both Sides

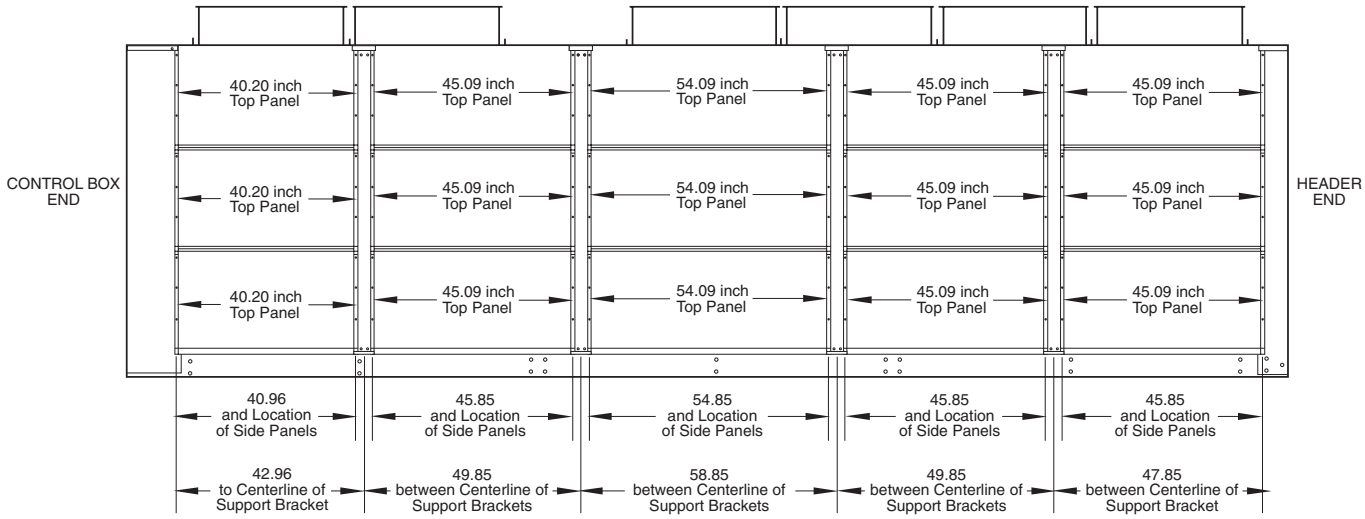

NOTES:
1. All dimensions are in inches.
2. Refer to Table 6 for modular size combinations.

Fig. 5F — Unit Assembly, 30GXN,R249,250,264 and Associated Modular Units — Both Sides

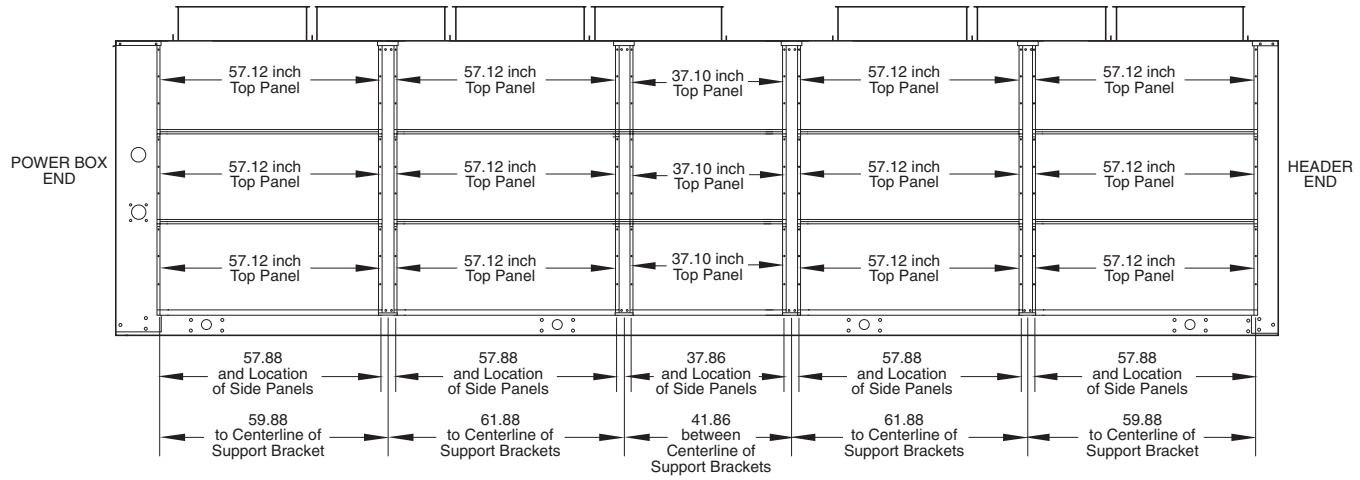

NOTES:
1. All dimensions are in inches.
2. Refer to Table 6 for modular size combinations.

Fig. 5G — Unit Assembly, 30GXN,R208,228 and Associated Modular Units — Both Sides

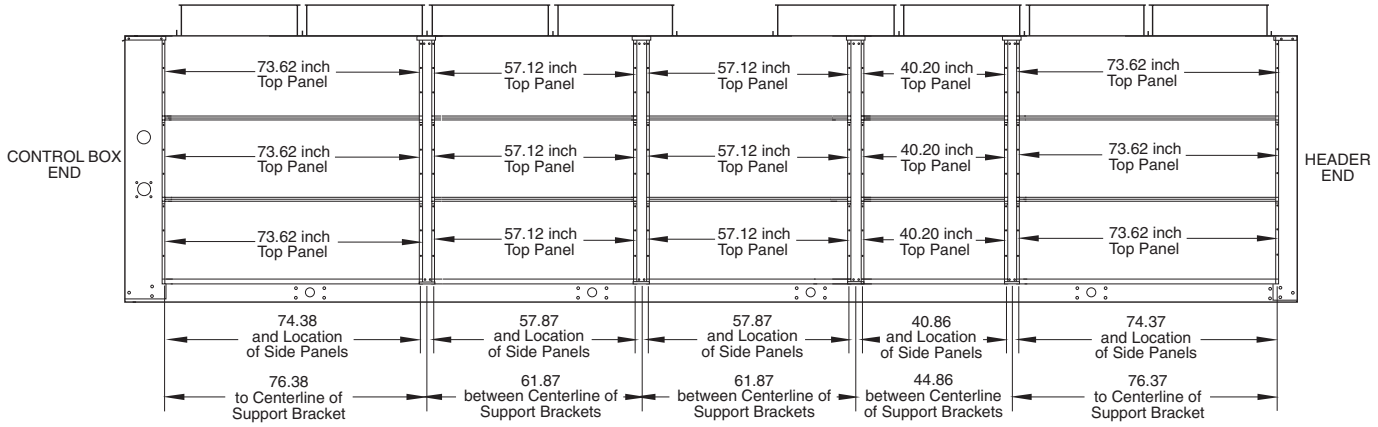

NOTES:
1. All dimensions are in inches.
2. Refer to Table 6 for modular size combinations.

Fig. 5H — Unit Assembly, 30GXN,R253,268-350 and Associated Modular Units — Both Sides

COOLER AND OIL SEPARATOR SIDE ASSEMBLY

1. Join 3 side panels to the corner posts on the control/power box end of the unit using the screws supplied in the accessory package. See Fig. 8. The insulated sides of the panels should face inward. Repeat this procedure for the header end of the unit.
2. Install the support bracket(s) to the middle section(s) of the unit using the screws supplied in the accessory package. Holes have been pre-drilled in the base rail of the unit to accept screws where needed. However, holes must be drilled in the necessary unit location(s) for the top of the support bracket. To ensure proper fit, be sure that the support bracket is vertical. Repeat this procedure when additional support brackets are needed. See Fig. 6 and 7.
3. Join 6 side panels to each support bracket using the screws supplied in the accessory package. The insulation should face away from the center of the support bracket.
4. After all the side panels have been secured to the unit, partially drive 5 screws into the outside of each side panel along its longest edge. Be sure not to fully tighten these screws until the top panels have been properly secured into place.
5. Attach the seal strip to the top flange of each top panel that will be used along the top edge of the unit as shown in Fig. 9. Install the seal strip to the flange facing the unit. This seal strip will protect the insulation in the panels from moisture.
6. Locate the keyways along each top panel. Install the top panels onto the side panels by sliding the keyways over the partially installed screws described in step 4 above. Slide the top panels toward the unit to lock the top panel into place and tighten the screws. These keyways allow for easy removal when maintenance becomes necessary.

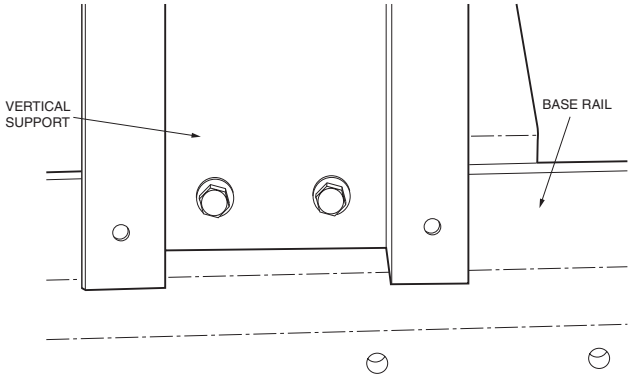

Fig. 6 — Typical Mounting of Vertical Support to Unit Base Rail

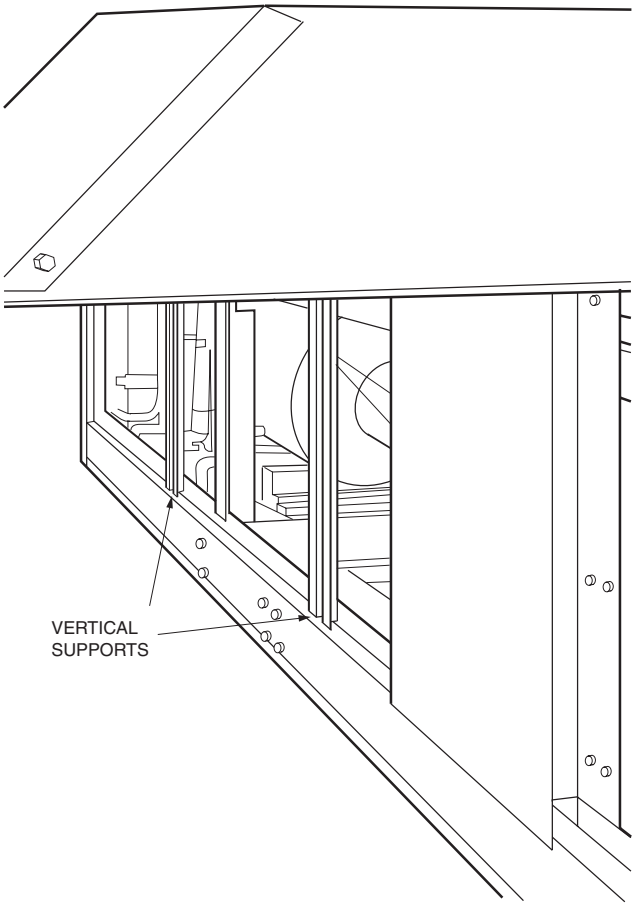

Fig. 7 — Vertical Supports Mounted to Unit

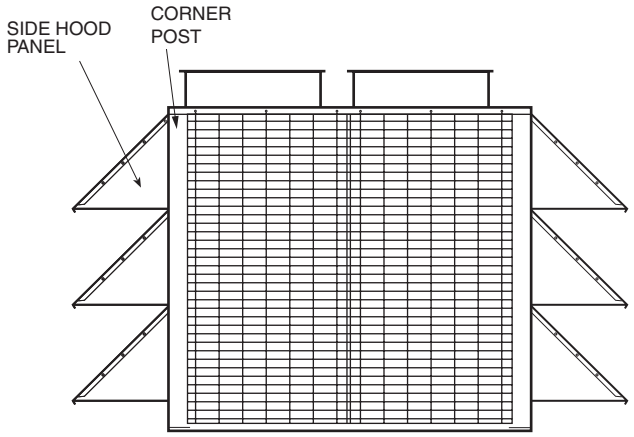

Fig. 8 — Typical 30GXN,R End View with Wind Baffles

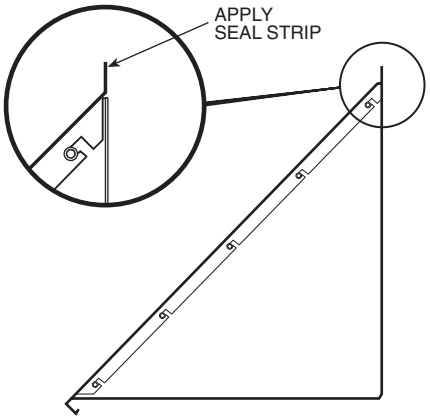

Fig. 9 — Side and Top Panel Configuration

Step 2 — Configure Motormaster® V Control — The Motormaster V control is configured for 1 of 12 operating modes based on the inputs to the control terminal block. The 30GXN,R units use operating modes 5 through 8. In these configurations, the control follows a 4 to 20 mA speed reference signal supplied to terminals 25 (+) and 2 (-). See Table 7 for details. Once power is applied during start-up, the control will configure itself to the mode selected. No additional programming is required. The 4 to 20 mA signal must be present at pins 25 and 2 for proper configuration.

Table 7 — Motormaster V Configuration Table

NOMINAL VOLTAGE-PHASE-Hz	MODE	CONTROL INPUT (Pins 25,2)	START CONTACT CONNECTION
230-3-60 460-3-60 575-3-60	5	External Control by 4 to 20 mA	TB2-TB1
208-3-60 380-3-60	6	External Control by 4 to 20 mA	TB2-TB13A
230-3-50	7	External Control by 4 to 20 mA	TB2-TB13B
380-3-50 415-3-50	8	External Control by 4 to 20 mA	TB2-TB13C

An auxiliary contact on the compressor is used to start the drive. The contact is wired to the small terminal block on the drive. The location of this connection will determine the drive voltage and frequency.

Step 3 — Mount Motormaster V Control(s)

IMPORTANT: The auxiliary contact is intended for use with the Siemens contactor only. If other contacts are used, a field-supplied pilot duty relay must be used.

30GXN,R080-150,160 (Units Require One Motormaster Control)

1. Using the screws provided in the package, mount the control as shown on the fan contactor bracket in Fig. 10.
2. Mount the fuse block (MM-F1).
3. Secure the fuses in the fuse block.
   NOTE: These fuses are rejection type and can be installed one way only.
4. Remove existing auxiliary contact from right side of compressor contactor assembly, CA-1, CB-1, CA1-1M, CB1-1M. Insert auxiliary contact supplied with kit.

30GXN,R153 AND 163-178 (Units Require Two Motormaster Controls)

1. Using the screws provided in the package, mount the controls as shown on the fan contactor bracket in Fig. 10.
2. Mount the fuse blocks (MM-F1 and MM-F2).
3. Secure the fuses in each fuse block.
   NOTE: These fuses are rejection type and can be installed one way only.
4. Remove existing auxiliary contact from right side of compressor contactor assembly, CA-1, CB-1, CA1-1M, CB1-1M. Insert auxiliary contact supplied with kit.

30GXN,R204-350 (Units Require Two Motormaster Controls)

1. Using the screws provided in the package, mount the bracket supplied as shown in Fig. 11.
2. Mount the two controls (MM-A and MM-B) as shown on the bracket. Next, mount the fuse blocks (MM-F1 and MM-F2).
3. Secure the fuses in each fuse block.
   NOTE: These fuses are rejection type and can be installed one way only.
4. Remove existing auxiliary contact from right side of compressor contactor assembly, CA-1, CA-2, CB-1, CB-2, CA1-1M, CA2-1M, CB1-1M, CB2-1M. Insert auxiliary contact supplied with kit.

Step 4 — Make Electrical Connections

⚠ WARNING

To avoid the possibility of electrical shock and personal injury, turn off all power to the 30GXN,R unit before making electrical connections. Tag all disconnects to alert others not to turn power on until the work is complete.

⚠ CAUTION

DO NOT connect incoming AC power to the output terminal T1, T2, and T3! Severe damage to the drive will result.

⚠ WARNING

Hazard of electrical shock! Wait three minutes after disconnecting incoming power before servicing drive. Capacitors retain charge after power is removed.

⚠ CAUTION

To avoid damage to the small terminals on the Motormaster V control, use care when tightening the compression terminals.

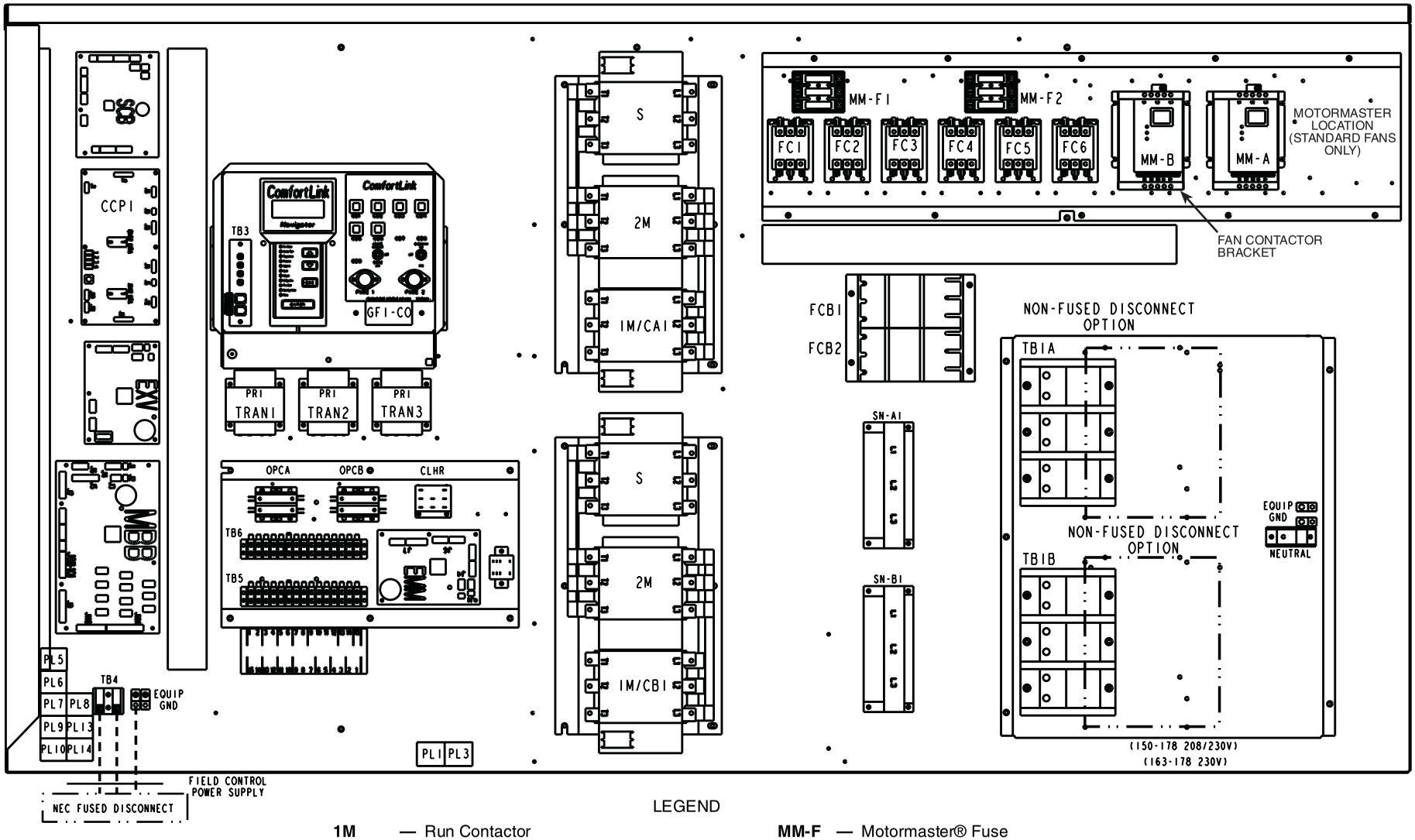

LEGEND

1M	— Run Contactor	**MM-F**	— Motormaster® Fuse
2M	— Delta Contactor	**NEC**	— National Electrical Code
CCP	— *Comfort*Link™ Compressor Protection	**OPC**	— Oil Pump Contactor
CLHR	— *Cooler Heater Relay*	**PL**	— Plug Assembly
EMM	— Energy Management Module	**PRI**	— Primary
EXV	— Electronic Expansion Valve	**S**	— Shorting Contactor
FC	— Fan Contactor	**SCB**	— Screw Compressor Board
FCB	— Fan Circuit Breaker	**SN**	— Sensor (Toroid)
GFI-CO	— Ground Fault Interrupter-Convenience Outlet	**TB**	— Terminal Block
GND	— Ground	**TRAN**	— Transformer
MBB	— Main Base Board		

Fig. 10 — 30GXN,R080-178 and Associated Modular Units Component Arrangement

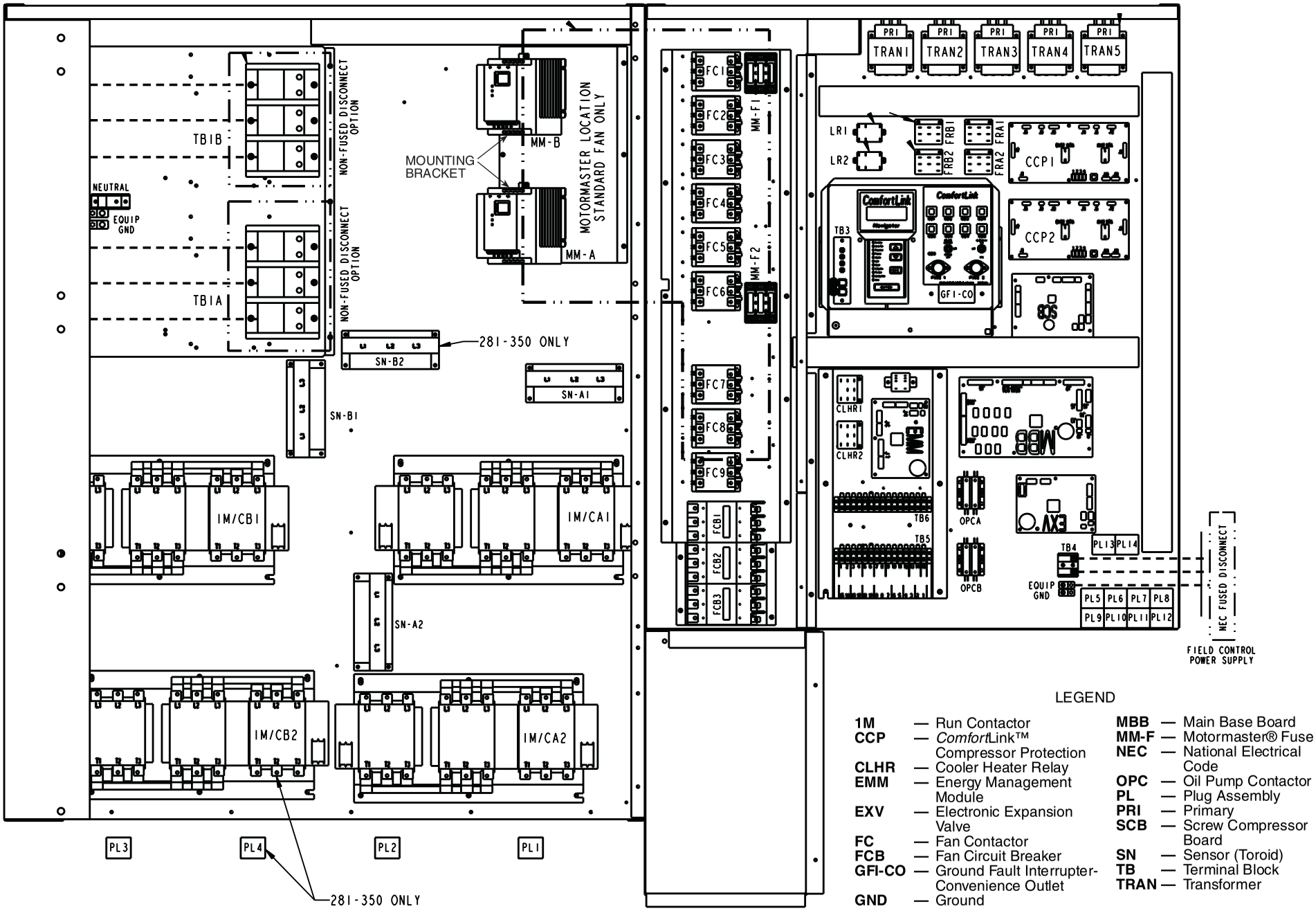

LEGEND

1M	— Run Contactor	**MBB**	— Main Base Board
CCP	— *Comfort*Link™ Compressor Protection	**MM-F**	— Motormaster® Fuse
CLHR	— Cooler Heater Relay	**NEC**	— National Electrical Code
EMM	— Energy Management Module	**OPC**	— Oil Pump Contactor
EXV	— Electronic Expansion Valve	**PL**	— Plug Assembly
FC	— Fan Contactor	**PRI**	— Primary
FCB	— Fan Circuit Breaker	**SCB**	— Screw Compressor Board
GFI-CO	— Ground Fault Interrupter-Convenience Outlet	**SN**	— Sensor (Toroid)
GND	— Ground	**TB**	— Terminal Block
		TRAN	— Transformer

Fig. 11 — 30GXN,R204-350 and Associated Modular Units Component Arrangement

Additional wires required for wiring the Motormaster V control(s) into the 30GXN,R unit are included in the accessory package. See Table 1. Use field-supplied wire nuts to make all stripped wire connections.

30GXN,R 080-150, 160 (and Associated Modular Units)

1. Remove the shielded power (FM-1 and FM-2) cables from the fan contactor (FC-1). Cut off the ring terminals and strip the wires $^1/_2$-in. from the ends.
2. Use the crimp connectors supplied to splice the black wire (marked no. 1) from each cable along with one of the 30-in. black wires in the kit. Connect the other end of the 30-in. black wire to lug T1 on the bottom of the control. Make similar connections for black wires marked no. 2 and no. 3 and connect them to lugs T2 and T3 of the control. See Fig. 12.
3. Using 24-in. long black, yellow and blue wires supplied, make wiring connections from FCB1 terminals 21,22 and 23 to MM-F1 terminals 11,12 and 13.
4. Using 24-in. long black, yellow and blue wires supplied, make wiring connections from MM-F1 terminals 21,22 and 23 to terminals L1, L2 and L3 on the top of the Motormaster® V control.
5. Locate the red harness wire labeled 'MM-A-25' and the black harness wire labeled 'MM-A-2'. Attach these wires to the terminal block of the control to pins 25 and 2.
6. Connect 43-in. violet wires from CA1-43,44 to CB1-43,44. Connect 50-in. red wires from CA1-43,44 to MM-A-2 and other MM-A terminal according to voltage/frequency. See Table 7.

30GXN,R153, 163-205, 225, 249, 250, 264 (and Associated Modular Units)

Circuit A:

1. Remove the shielded power (FM-7 and FM-8) cables from the fan contactor (FC-4). Cut off the ring terminals and strip the wires $^1/_2$-in. from the ends.
2. Use the crimp connectors supplied to splice the black wire (marked no. 1), from each cable along with one of the 30-in. black wires in the kit. Connect the other end of the 30-in. black wire to lug T1 on the bottom of the control MM-A. Make similar connections for black wires marked no. 2 and no. 3 and connect them to lugs T2 and T3 of the control. See Fig. 13.
3. Use 1 each of the 50-in. long black, yellow and blue wires supplied to make wiring connections from FCB1 (or FCB2 if used) terminals 21,22 and 23 to MM-F2 terminals 11,12 and 13.
4. Make wiring connections from MM-F2 terminals 21,22 and 23 to terminals L1, L2 and L3 on the top of the MM-A control using the 35-in. long black, yellow and blue wires supplied.
5. Locate the red harness wire labeled 'MM-A-25' and the black harness wire labeled 'MM-A-2'. Attach these wires to the terminal block of the control to pins 25 and 2.
6. Connect 50-in. red wires from CA1-43,44 to MM-A-2 and other terminal according to voltage/frequency. See Table 7.
7. For 30GXN,R204, 205, 225, 249, 250, 264 connect 43-in. violet wires from CA1-43, 44 to CA2-43, 44.

Circuit B:

1. Remove the shielded power (FM-1 and FM-2) cables from the fan contactor (FC-1). Cut off the ring terminals and strip the wires $^1/_2$-in. from the ends.
2. Use the crimp connectors supplied to splice the black wire (marked no. 1) from each cable along with one of the 30-in. black wires in the kit. Connect the other end of the 30-in. black wire to lug T1 on the bottom of the control MM-B. Make similar connections for black wires marked no. 2 and no. 3 and connect them to lugs T2 and T3 of the control. See Fig. 13.
3. Use 1 each of the 50-in. long black, yellow and blue wires supplied to make wiring connections from FCB1 terminals 21,22 and 23 to MM-F1 terminals 11,12 and 13.
4. Make wiring connections from MM-F1 terminals 21,22 and 23 to terminals L1, L2 and L3 on the top of the MM-B control using the 65-in. long black, yellow and blue wires supplied.
5. Locate the red harness wire labeled 'MM-B-25' and the black harness wire labeled 'MM-B-2'. Attach these wires to the terminal block of the control to pins 25 and 2.
6. Connect 70-in. red wires from CA1-43,44 to MM-A-2 and other terminal according to voltage/frequency. See Table 7.

30GXN,R208, 228, 253, 268, 281-350 (and Associated Modular Units)

Circuit A:

1. Remove the shielded power (FM-9 and FM-10 for 208-268 sizes, FM-11 and FM-12 for 281-350 sizes) cables from the fan contactor (FC-6). Cut off the ring terminals and strip the wires $^1/_2$-in. from the ends.
2. Use the crimp connectors supplied to splice the black wire (marked no. 1) from each cable along with one of the 30-in. black wires in the kit. Connect the other end of the 30-in. black wire to lug T1 on the bottom of the control MM-A. Make similar connections for black wires marked no. 2 and no. 3 and connect them to lugs T2 and T3 of the control. See Fig. 14.
3. Use 1 each of the 50-in. long black, yellow and blue wires supplied to make wiring connections from FCB1 (or FCB2 if used) terminals 21,22 and 23 to MM-F1 terminals 11,12 and 13.
4. Make wiring connections from MM-F2 terminals 21,22 and 23 to terminals L1, L2 and L3 on the top of the MM-A control using the 35-in. long black, yellow and blue wires supplied.
5. Locate the red harness wire labeled 'MM-A-25' and the black harness wire labeled 'MM-A-2'. Attach these wires to the terminal block of the control to pins 25 and 2.
6. Connect 43-in. violet wires from CA1-43,44 to CA2-43,44.
7. Connect 50-in. red wires from CA1-43,44 to MM-2 and other terminal according to voltage/frequency. See Table 7.

Circuit B:

1. Remove the shielded power (FM-1 for all sizes and FM-2 also for 281-350 sizes only) cables from the fan contactor (FC-1). Cut off the ring terminals and strip the wires $^1/_2$-in. from the ends.
2. Use the crimp connectors supplied to splice the black wire (marked no. 1) from each cable along with one of the 30-in. black wires in the kit. Connect the other end of the 30-in. black wire to lug T1 on the bottom of the control MM-B. Make similar connections for black wires marked no. 2 and no. 3 and connect them to lugs T2 and T3 of the control. See Fig. 14.
3. Use 1 each of the 50-in. long black, yellow and blue wires supplied to make wiring connections from FCB1 terminals 21,22 and 23 to MM-F2 terminals 11,12 and 13.
4. Make wiring connections from MM-F1 terminals 21,22 and 23 to terminals L1, L2 and L3 on the top of the MM-B control using the 65-in. long black, yellow and blue wires supplied.

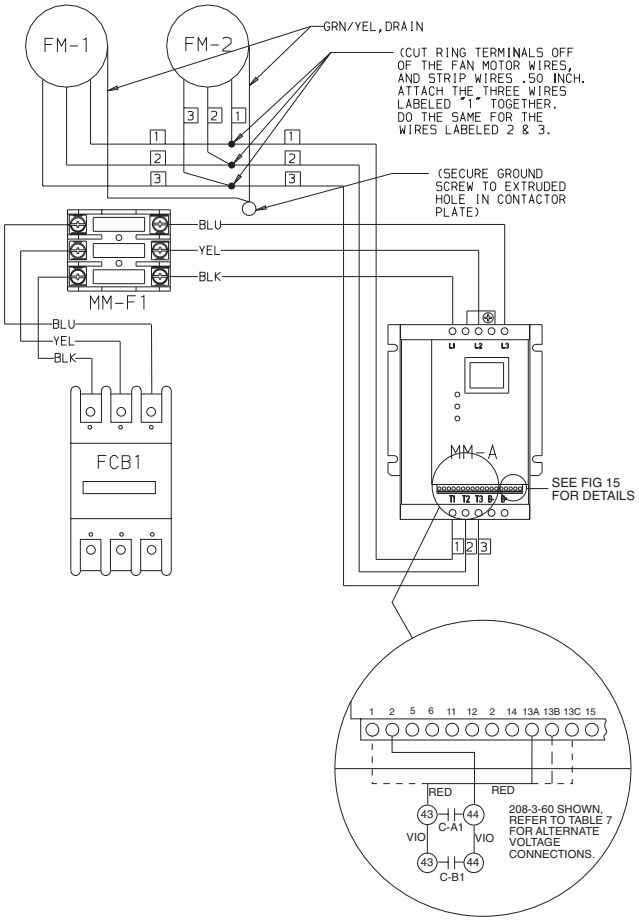

Fig. 12 — 30GXN,R080-150, 160 Motormaster® V Wiring Details

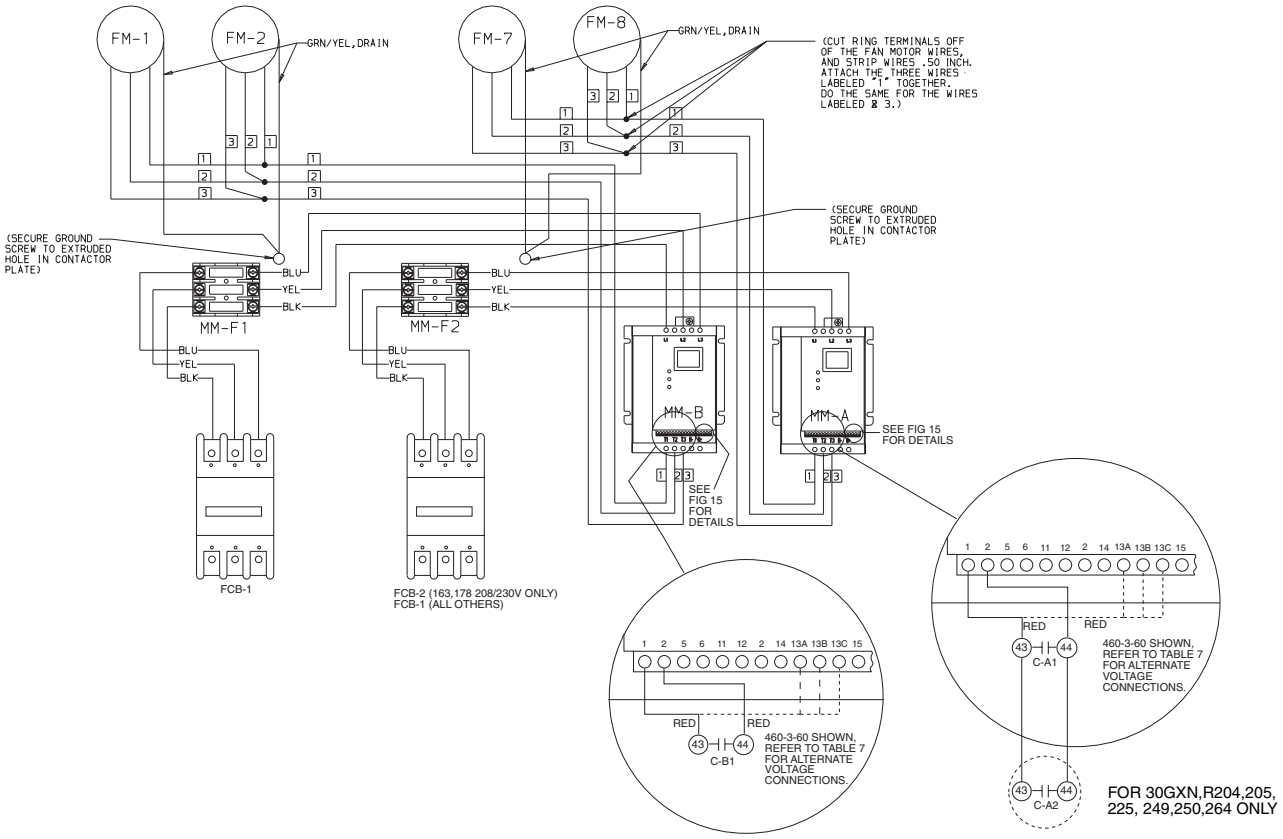

Fig. 13 — 30GXN,R153, 163-205, 225, 249-264 Motormaster V Wiring Details

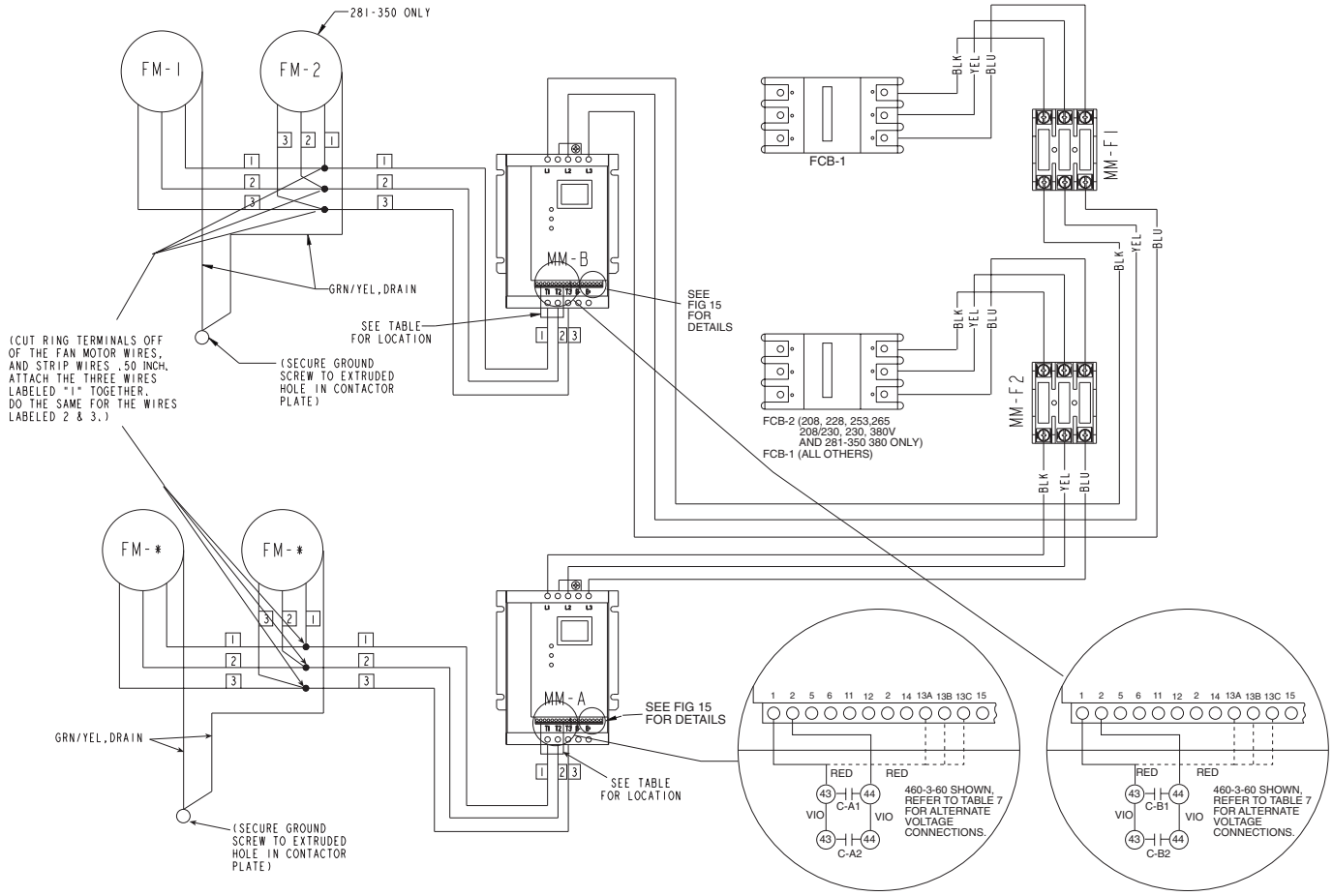

*30GXN,R208, 228, 253, 268 connect MMV to fan motors 9 and 10. 30GXN,R281-350 connect MMV to fan motors 11 and 12.

Fig. 14 — 30GXN,R208, 228, 253, 268, 281-350 Motormaster® V Wiring Details

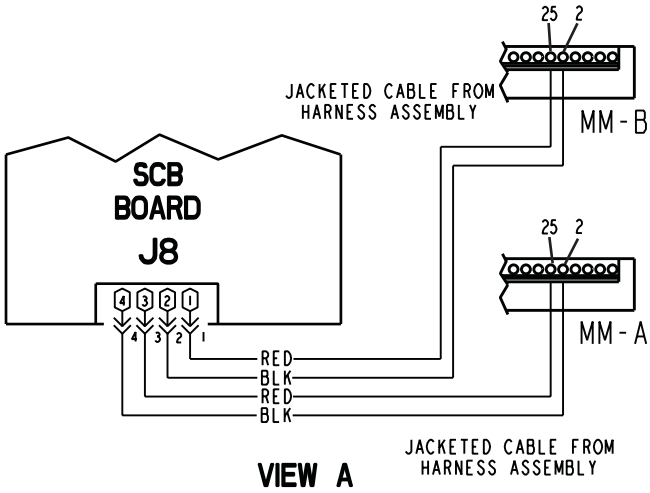

NOTE: Terminals B+ and B– are not used.

Fig. 15 — 4 to 20 mA Control Wiring

5. Locate the red harness wire labeled 'MM-B-25' and the black harness wire labeled 'MM-B-2'. Attach these wires to the terminal block of the control to pins 25 and 2.
6. For 30GX281-350, 4 compressor units, connect 43-in. violet wires from CB1-43,44 to CB2-43,44.
7. Connect 70-in. red wires from CB1-43,44 to MM-B-2 and other terminal according to voltage/frequency. See Table 7.

NOTE: See Figures 16A-16E for the location of condenser fan motors controlled by the Motormaster® V controller(s).

Step 5 — Configure Unit for Motormaster V Operation — The *Comfort*Link™ control must be configured for Motormaster V operation. Use the Navigator display to configure the system as follows:

1. Set the Enable/Off/Remote switch to OFF position.
2. Press the ESCAPE key until the screen displays 'SELECT A MENU ITEM' and use the arrow key to select the Configuration mode LED.
3. Press ENTER key, then the down arrow key to select the sub-mode 'OPT1'. Press the ENTER key.
4. Press the down arrow key until 'VHPT' is indicated.
5. Press the ENTER key and 'ENTER PASSWORD' will be displayed.
6. Press the ENTER key four times for the default '1111' password or enter the appropriate password as required.
7. Use arrow keys to change 'NONE' to '4-20 MA' and press the ENTER key.
8. Return the Enable/Off/Remote switch to the proper position.

Step 6 — Test the Motormaster V Control Output

⚠ WARNING

Electrical shock hazard! Wait three minutes after disconnecting incoming power before servicing drive. Capacitors retain charge after power is removed.

⚠ WARNING

Before attempting to operate the drive, motor and driven equipment, be sure all procedures pertaining to installation and wiring have been properly followed. These drives start automatically when line power is received. Ensure that all personnel are clear of fans and that the guards are installed before applying power.

IMPORTANT: If input power has not been applied to the drive for a period of time exceeding three years (due to storage, etc.), the electrolytic DC bus capacitors within the drive can change internally, resulting in excessive leakage current. This can result in premature failure of the capacitors if the drive is operated after such a long period of inactivity or storage. In order to reform the capacitors and prepare the drive for operation after a long dormant period, apply input power to the drive for 8 hours prior to actually operating the motor.

Set the Enable/Off/Remote switch in the Off position. Follow the instructions in the Controls Start-Up, Operation Service and Troubleshooting manual and put the chiller in Service Test mode.

For 30GXN,R080-150,160 models, start either compressor A1 or B1. For all other models, start a compressor from each circuit separately in order to test both controls. When the compressor starts, the appropriate MMV controller will be energized and power will be applied to the Motormaster V control. The LED will display the speed of the motor in the range of 8 to 50 Hz or 60 Hz depending on unit power supply.

Once energized, the control will start the fan(s) connected to its output and will control fan speed to maintain approximately 113 F condensing temperature. Above this temperature, the fan(s) should be operating at full speed. The 4 to 20 mA signal comes from the screw compressor board (SCB) located in the *Comfort*Link control panel.

Ensure proper fan rotation. Fans should operate counterclockwise when viewed from above. To change fan rotation, swap any two wires at the output of the control (T1, T2, T3).

NOTE: The control is NOT sensitive with regard to incoming power phasing. Do NOT change incoming line power to reverse fan rotation.

PROGRAMMING NOTES — As detailed in Step 2, no additional programming is required for this control since it is completely configured by the inputs.

IMPORTANT: Carrier strongly discourages altering unit programming without consulting Carrier service personnel.

Unit damage may occur from improper programming.

The drive displays the program parameters as seen in Table 8. Parameters 50-60 and 69-71 are monitor functions and cannot be changed. The remainder of the parameters can be changed after entering the password.

To enter password and change program values:

1. Press MODE.
2. Upper right decimal point blinks.
3. Display reads "00". To enter the PROGRAM mode to access the parameters, press the MODE button. This will activate the PASSWORD prompt (if the password has not been disabled). The display will read "00" and the upper right-hand decimal point will be blinking.
4. Use the up and down buttons to scroll to the password value (the factory default password is "111") and press the MODE button. Once the correct password value is entered, the display will read "P01", which indicates that the PROGRAM mode has been accessed at the beginning of the parameter menu (P01 is the first parameter).

NOTE: If the display flashes "Er", the password was incorrect and the process to enter the password must be repeated.

5. Press MODE to display present parameter setting. When the upper right decimal point blinks, use the up and down buttons to scroll to the desired parameter number.

Once the desired parameter number is found, press the MODE button to display the present parameter setting. The upper right-hand decimal point will begin blinking, indicating that the present parameter setting is being displayed, and that it can be changed by using the up and down buttons. Use up and down buttons to change setting. Press MODE to store new setting.

Pressing the MODE button will store the new setting and also exit the PROGRAM mode. To change another parameter, press the MODE key again to re-enter the PROGRAM mode (the parameter menu will be accessed at the parameter that was last viewed or changed before exiting). If the MODE key is pressed within two minutes of exiting the PROGRAM mode, the password is not required to access the parameters. After two minutes, the password must be entered in order to access the parameters again.

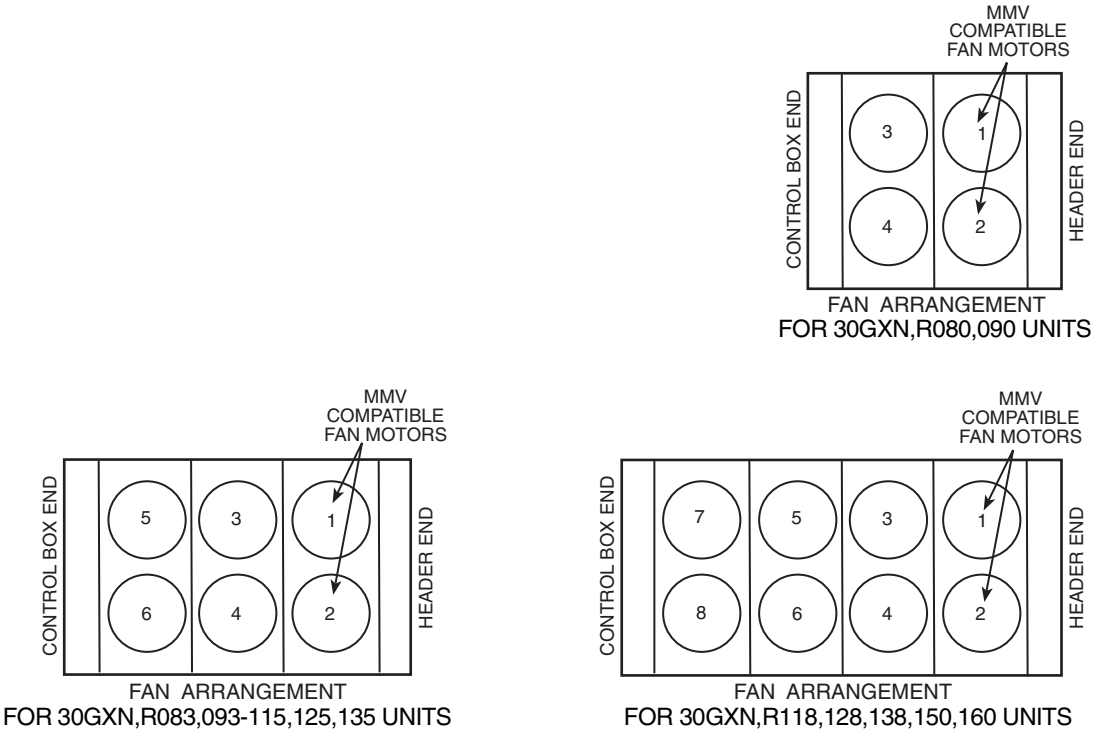

Fig. 16A — Typical Motormaster® V Motor Location for 30GXN,R080-150,160 and Associated Modular Units

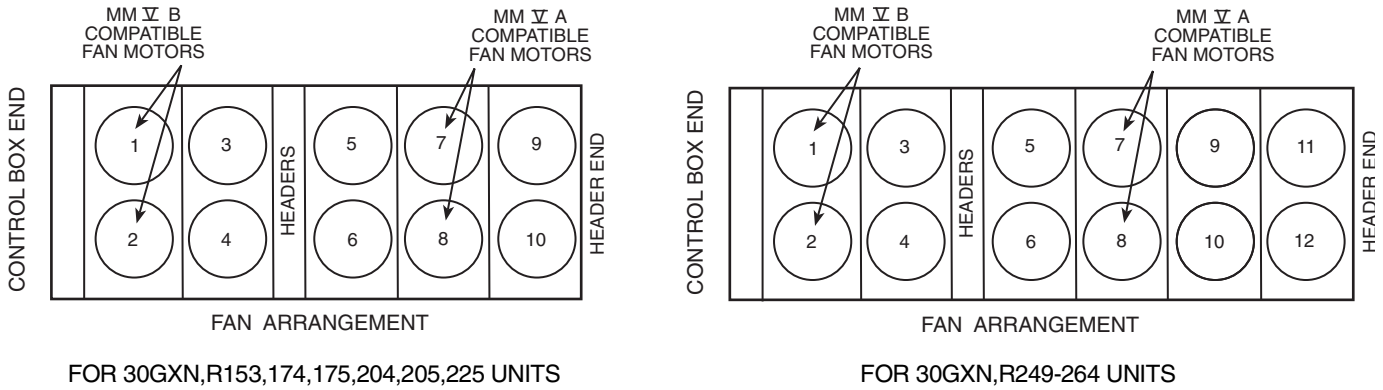

Fig. 16B — Typical Motormaster V Motor Location for 30GXN,R153,174,204,205,225,249-264 and Associated Modular Units

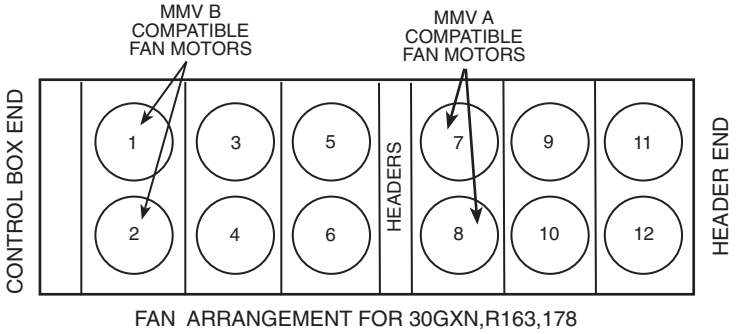

Fig. 16C — Typical Motormaster® V Motor Location for 30GXN,R163,178 and Associated Modular Units

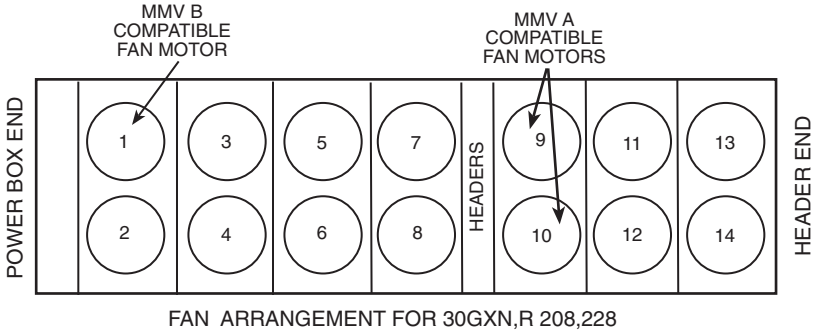

Fig. 16D — Typical Motormaster V Motor Location for 30GXN,R208,228 and Associated Modular Units

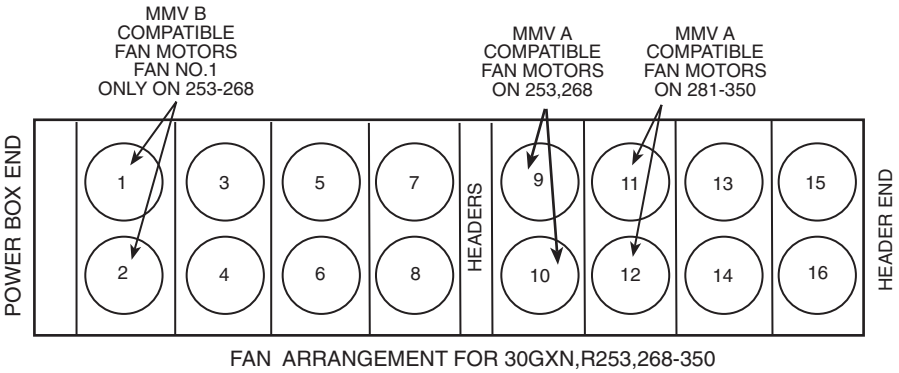

Fig. 16E — Typical Motormaster V Motor Location for 30GXN,R253,268-350 and Associated Modular Units

TO CHANGE PASSWORD — Enter the current password, then change parameter P44 to the desired password.

TO RESET FACTORY DEFAULTS — Change P48 to one of the 4 operating modes (5-8) and then cycle power.

EPM CHIP — The drive uses an Electronic Programming Module (EPM) chip to store the program parameters. This is an EEPROM memory chip and is accessible from the front of the VFD (variable frequency drive). It should not be removed with power applied to the VFD.

Table 8 — Program Parameters for the 4 Operating Modes

PARAMETER	DESCRIPTION	MODE 5	MODE 6	MODE 7	MODE 8
P01	Line Voltage: 01 = low line, 02 = high line	01	02	01	02
P02	Carrier Freq: 01 = 4 kHz, 02 = 6 kHz, 03=8 kHz	01	01	01	01
P03	Start-up mode: flying restart	06	06	06	06
P04	Stop mode: coast to stop	01	01	01	01
P05	Standard Speed source: 04=4-20 mA, 05=R22, 06=R134a	04	04	04	04
P06	TB-14 output: 01 = none	01	01	01	01
P08	TB-30 output: 01 = none	01	01	01	01
P09	TB-31 Output: 01 = none	01	01	01	01
P10	TB-13A function sel: 01 = none	01	01	01	01
P11	TB-13B function sel: 01 = none	01	01	01	01
P12	TB-13C function sel: 01 = none	01	01	01	01
P13	TB-15 output: 01 = none	01	01	01	01
P14	Control: 01 = Terminal strip	01	01	01	01
P15	Serial link: 02 = enabled 9600,8,N,2 with timer	02	02	02	02
P16	Units editing: 02 = whole units	02	02	02	02
P17	Rotation: 01 = forward only, 03 = reverse only	01	01	01	01
P19	Acceleration time: 10 sec	10	10	10	10
P20	Deceleration time: 10 sec	10	10	10	10
P21	DC brake time: 0	0	0	0	0
P22	DC BRAKE VOLTAGE 0%	0	0	0	0
P23	Min freq = 8 Hz ~ 100 - 160 rpm	8	8	8	8
P24	Max freq	60	60	50	50
P25	Current limit:	125	125	110	110
P26	Motor overload: 100	100	100	100	100
P27	Base freq: 60 or 50 Hz	60	60	50	50
P28	Fixed boost: 0.5% at low frequencies	0.5	0.5	0.5	0.5
P29	Accel boost: 0%	0	0	0	0
P30	Slip compensation: 0%	0	0	0	0
P31	Preset spd #1: 0	57	57	47	47
P32	Preset spd #2: 0	0	0	0	0
P33	Preset spd #3: 0	0	0	0	0
P34	Preset spd 4 default – R22 setpoint. TB12-2 open	18.0	18.0	18.0	18.0
P35	Preset spd 5 default – R134a setpoint. TB12-2 closed	12.6	12.6	12.6	12.6
P36	Preset spd 6 default	0	0	0	0
P37	Preset spd 7 default	0	0	0	0
P38	Skip bandwidth	0	0	0	0
P39	Speed scaling	0	0	0	0
P40	Frequency scaling 50 or 60 Hz	60	60	50	50
P41	Load scaling: default (not used so NA)	200	200	200	200
P42	Accel/decel #2: default (not used so NA)	60	60	60	60
P43	Serial address	1	1	1	1
P44	Password:111	111	111	111	111
P45	Speed at min signal: 8 Hz used when PID disabled and 4-20 mA input	8	8	8	8
P46	Speed at max feedback: 60 or 50 Hz. Used when PID disabled and 4-20 mA input	60	60	50	50
P47	Clear history? 01 = maintain. (set to 00 to clear)	01	01	01	01
P48	Program selection: Mode 1 – 12	05	06	07	08
P61	PI Mode: 05= reverse, 0-5V, 01 = no PID	01	01	01	01
P62	Min feedback = 0 (0V *10)	0	0	0	0
P63	Max feedback = 50 (5V * 10)	50	50	50	50
P64	Proportional gain = 4%	4	4	4	4
P65	Integral gain = .2	.2	.2	.2	.2
P66	PI accel/decel (setpoint change filter) = 5	5	5	5	5
P67	Min alarm	0	0	0	0
P68	Max alarm	0	0	0	0

LEGEND

PID — Proportional Integral Derivative

TROUBLESHOOTING

Troubleshooting the Motormaster® V control requires a combination of observing system operation and VFD display information. Motormaster V control should follow the 4 to 20 mA signal from the *Comfort*Link™ controls.

The speed command from the *Comfort*Link controls can be monitored in 2 ways:

1. Variables VH.PA, VH.PB in the CIR.A or CIR.B submode of the *Comfort*Link Outputs mode are given as a percentage of 4 to 20 mA range.
2. P56 in Motormaster V parameter menu shows 4 to 20 mA input in percent of maximum input.

Due to the variable definitions of each controller, Table 9 provides a cross reference.

Table 9 — Controller Cross Reference

CONTROL SIGNAL	VH.PA, VH.PB (*Comfort*Link™)	4-20mA INPUT (P56, Motormaster V)	VFD SPEED (P71, Motormaster V)
4 mA	0%	20%	8 Hz
12 mA	50%	60%	26 Hz
20 mA	100%	100%	60 Hz

The Motormaster V control also provides real time monitoring of key inputs and outputs. The collective group is displayed through parameters 50-56 and all values are read only.

Parameters 50-56 are as follows:

- P50: FAULT HISTORY - Last 8 faults
- P51: SOFTWARE version
- P52: DC BUS VOLTAGE — in percent of nominal. Usually rated input voltage x 1.4
- P53: MOTOR VOLTAGE — in percent of rated output voltage
- P54: LOAD — in percent of drives rated output current rating
- P55: VDC INPUT — in percent of maximum input: 50 will indicate full scale which is 5 v
- P56: 4-20 mA INPUT — in percent of maximum input. 20% = 4 mA, 100% = 20 mA

Fault Codes — The drive is programmed to automatically restart after a fault and will attempt to restart three times after a fault (the drive will not restart after CF, cF, GF, F1, F2-F9, or Fo faults). If all three restart attempts are unsuccessful, the drive will trip into FAULT LOCKOUT (LC), which requires a manual reset. See Tables 10 and 11.

To disable external control mode (5-8) and enter manual speed control mode:

1. Change P05 to '01- key pad.
2. Push ▼ and ENTER arrow key to set manual speed.

TO PROVIDE MANUAL START/STOP CONTROL — Remove start command jumper and install a switch between the appropriate start terminals.

Loss of CCN Communications — CCN communications with external control systems can be affected by high frequency electrical noise generated by Motormaster V control. Ensure unit is well grounded to eliminate ground currents along communication lines.

If communications are lost only while Motormaster V control is in operation, install a repeater (CEAS420876-2) and power supplies (CEAS221045-01, two required) for the CCN communication bus. This will provide signal isolation.

Table 10 — Fault Codes

FAULT CODE	DESCRIPTION	SOLUTION
AF	High Temperature Fault: Ambient temperature is too high; Cooling fan has failed (if equipped).	Check cooling fan operation
CF	Control Fault: A blank EPM, or an EPM with corrupted data has been installed.	Perform a factory reset using Parameter 48 — PROGRAM SELECTION. See Programming Notes (Step 6).
cF	Incompatibility Fault: An EPM with an incompatible parameter version has been installed.	Either remove the EPM or perform a factory reset (Parameter 48) to change the parameter version of the EPM to match the parameter version of the drive.
GF	Data Fault: User data and OEM defaults in the EPM are corrupted.	Restore factory defaults by toggling P48 to another mode. Then set P48 to desired mode to restore all defaults for that mode. See configuration section (Step 2). If that does not work, replace EPM.
HF	High DC Bus Voltage Fault: Line voltage is too high; Deceleration rate is too fast; Overhauling load.	Check line voltage — set P01 appropriately
JF	Serial Fault: The watchdog timer has timed out, indicating that the serial link has been lost.	Check serial connection (computer) Check settings for P15 Check settings in communication software to match P15
LF	Low DC Bus Voltage Fault: Line voltage is too low.	Check line voltage — set P01 appropriately
OF	Output Transistor Fault: Phase to phase or phase to ground short circuit on the output; Failed output transistor; Boost settings are too high; Acceleration rate is too fast.	Reduce boost or increase acceleration values. If unsuccessful, replace drive.
PF	Current Overload Fault: VFD is undersized for the application; Mechanical problem with the driven equipment.	Check line voltage — set P01 appropriately Check for dirty coils Check for motor bearing failure
SF	Single-phase Fault: Single-phase input power has been applied to a three-phase drive.	Check input power phasing
F1	EPM Fault: The EPM is missing or damaged.	
F2-F9, Fo	Internal Faults: The control board has sensed a problem.	Consult factory.
Drive display = '---' even though drive should be running	Start contact is not closed.	Check auxiliary contact for proper operation and configuration. See configuration section (Step 5).
Drive display = 8.0 Hz even though fan should be running faster	Control signal is at 4 mA	Saturated condensing temperature is below setpoint in *Comfort*Link controls.
VFD flashes 57 (or 47) and LCS	Speed signal lost. Drive will operate at 57 (or 47) Hz until reset or loss of start command. Resetting requires cycling start command (or power).	In stand-alone mode: In external control mode (30GXN,R) check wiring from unit controls J8 for 4-20 mA signal. Drive runs at 57 Hz in modes 5,6 and 47 Hz in modes 7,8.
VFD flashes "LCS and - - -"	Start contact is not closed.	Check auxiliary contact for proper operation and configuration. See configuration section (Step 5).
LC	Fault lockout — 3 or more unsuccessful starts	View PSD: Fault History to determine.

Table 11 — Status Indication

FAULT CODE	FAULT NAME	DESCRIPTION
CL	CURRENT LIMIT	The output has exceeded the CURRENT LIMIT setting (Parameter 25) and the drive is reducing the output frequency to reduce the output current. If the drive remains in CURRENT LIMIT for too long, it can trip into a CURRENT OVERLOAD fault (PF).
Er	ERROR	Invalid data has been entered.
GE	GE	“GE” will be displayed if an attempt is made to change the OEM default settings when the drive is operating in the OEM mode (see Parameter 48).
LC	FAULT LOCKOUT	Failed three restart attempts. Requires a manual reset.
SP	START PENDING	This is displayed during the first 15 second interval between restart attempts.

Copyright 2003 Carrier Corporation