Carrier
United Technologies

# Product Data

## AquaSnap® 30RAP010-150 Air-Cooled Chillers and 30RAP011-060 Air-Cooled Chillers with Greenspeed® Intelligence with Puron® Refrigerant (R-410A) 50/60 Hz

10 to 150 Nominal Tons
(35 to 528 Nominal kW)

greenspeed AQUASNAP®

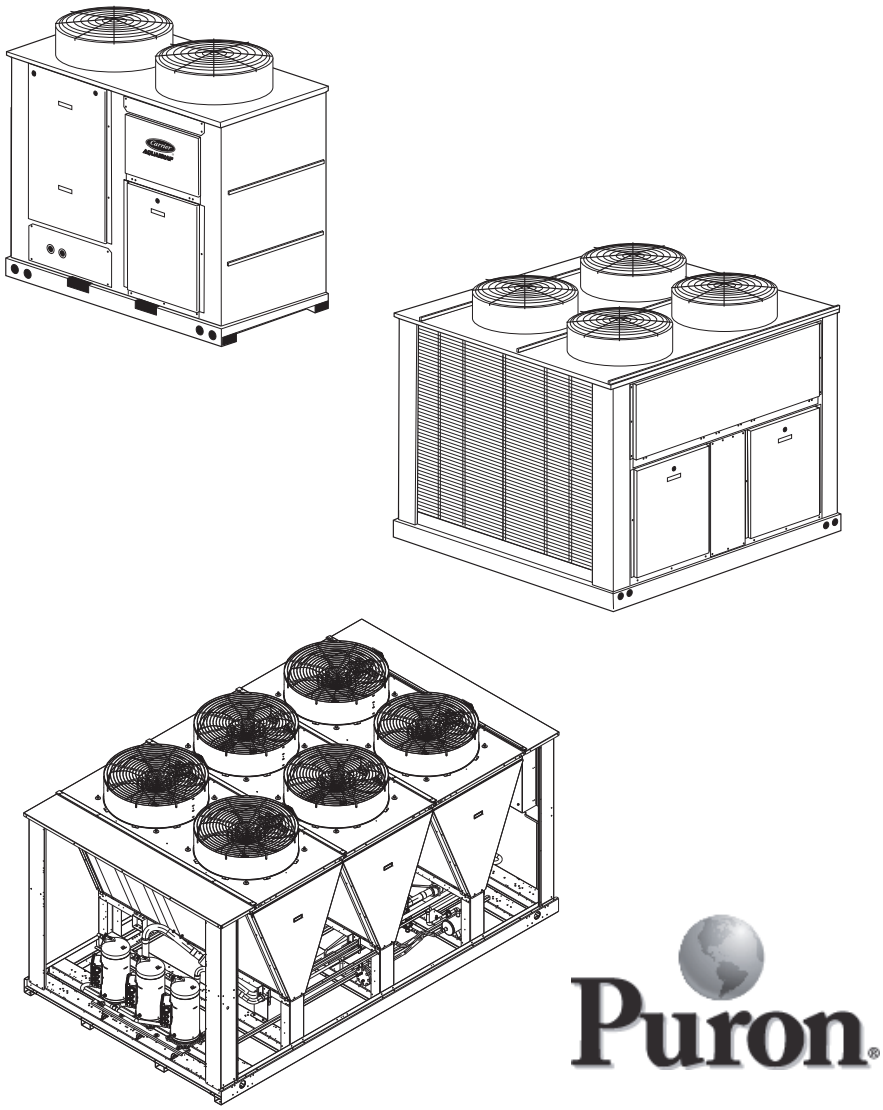

Puron®

SEISMICOMPLIANT*

* Meets IBC 2006, ASCE-7-05, CBC 2007, and OSHPD seismic requirements.

The AquaSnap chiller is an effective all-in-one package that is easy to install and easy to own. AquaSnap chillers operate quietly and efficiently. Value-added features include:

- Rotary scroll compression
- HFC Puron® refrigerant (R-410A)
- Low-sound AeroAcoustic™ fan system
- Easy to use *Comfort*Link controls
- Optional integrated hydronic pump package (60 Hz only) with VFD (variable frequency drive) compatible motors, with optional VFD on size 070-150 models
- Coil design flexibility—Microchannel coil technology available on all units, and RTPF coil technology available on sizes 070-150
- Accessory fluid storage tank on size 010-060 models
- Optional digital scroll compressors on size 010, 015, and 018-090 models
- Optional high-efficiency, variable-speed condenser fans (30RAP011-060 with Greenspeed® intelligence)

# Features/Benefits

## Carrier's superior chiller design provides savings at initial purchase, at installation, and for years afterward.

### Costs less right from the start

Carrier's AquaSnap chillers feature a compact, all-in-one package design that installs quickly and easily on the ground or the rooftop. The optional pump and hydronic components (60 Hz only) are already built in; this costs less than buying and installing the components individually. The chiller's fully integrated and pre-assembled hydronic system (60 Hz only) installs in minutes. Among chillers in its class, the AquaSnap chiller is one of the easiest and least expensive to install.

© Carrier Corporation 2016

# Features/Benefits (cont)

The preassembled and integrated hydronic module uses top-quality components and pumps to ensure years of reliable operation.

Use of the optional fluid storage tank, available on size 010-060 models, reduces installation costs and ensures that sufficient fluid volume is available for close-coupled and process cooling applications. The AquaSnap unit's high efficiency keeps energy costs down.

### AquaSnap® chillers make noise in the marketplace, not the workplace.

The AquaSnap chiller's low-sound AeroAcoustic™ fan produces up to half the sound level of propeller fans. Much of the noise reduction is in frequencies where noise is most annoying, which makes AquaSnap chillers ideal for sound-sensitive environments. When lower ambient temperatures allow part load operation or during scheduled nighttime operation, the units operate with fewer fans and become even quieter. AquaSnap chillers are quiet during the day and even quieter at night.

### The savings will continue to mount

Besides costing less to buy and install, AquaSnap chillers are also more affordable to operate. Carrier's Aqua Series chillers are our most efficient air-cooled models. The AquaSnap chiller provides full load EER (Energy Efficiency Ratio) up to 10.5 for 60 Hz applications and up to 11.0 for 50 Hz applications. The AquaSnap chiller provides IPLV (integrated part load value) up to 15.8 for 60 Hz applications, and up to 16.6 for 50 Hz applications. When Greenspeed® intelligence is employed, the IPLV values rise to as high as 16.8 for 60 Hz applications and up to 17.4 for 50 Hz applications. AquaSnap chillers use ultra-quiet, high-efficiency rotary scroll compressors, operated in single (sizes 010 and 015), tandem (sizes 011, 016-060), and tandem or trio (sizes 070-150) per independent circuit for greater efficiency at partial loads.

**30RAP chillers with Greenspeed intelligence** feature a high-efficiency, variable-speed condenser fan option along with fine-tuned *Comfort*Link controls, which together provide premium part load efficiency to facilitate reduced utility costs over the lifespan of the chiller. Additionally, the lower sound levels achieved at part load conditions can be very beneficial for sensitive acoustic applications. NOTE: Unit sizes 011 and 016 are only available with Greenspeed intelligence.

**Standard DC link reactor for 30RAP units with Greenspeed intelligence** is included in all drives for the fans. The use of this component mitigates customer concern over electrical system harmonics, and therefore AC line reactors should not be required for applications employing 30RAP chillers with Greenspeed intelligence.

**Electronic expansion valve (EXV)** allows for precise control through all operating ranges, resulting in higher efficiency and improved reliability.

### Proven reliability that's built in

Thousands of AquaSnap chillers are already in service around the world. This field-proven design is backed by a 12-month warranty that includes the hydronic system. The compressors are maintenance-free and protected by an auto-adaptive control that minimizes compressor wear. Unit sizes 035 and up have two independent refrigerant circuits. Year-round operation is standard, from –20 F (–29 C) (with optional cooler heater, low ambient control [on units with fixed speed fans], and wind baffles) to 120 F (50 C).

**Rotary scroll compressors** provide smooth, quiet, and reliable operation.

### All-in-one package

AquaSnap chillers provide one of the most comprehensive chilled water circuits available for air-cooled chillers. Included is a brazed plate direct expansion cooler that may be remote-mounted. The cooler is also completely drainable with factory-installed vents and drains.

### Strainer included

A 40-mesh strainer is provided with every 30RAP unit, making the chiller installation easier, lower in cost, and eliminating customer concern. Other manufacturers also require the strainer but may not include it with their chillers, giving the impression that they offer a lower pressure drop chiller. It is important to note that the strainer is required for all brazed plate heat exchangers; therefore, not considering it from the beginning may lead to the selection of the incorrect pump for the system and an incorrect evaluation of the overall installation cost.

**Electronic thermal-dispersion flow switch** is included with the cooler. The switch is factory installed and tested and contains no moving parts for high reliability.

**Optional integrated hydronic package** (60 Hz chillers only) is more than just a pump; it is an entire chilled-water system, including:

- Single/dual pumps up to 15 hp and 160 ft head
- Strainer
- Flow regulator
- Freeze protection to –20 F (–29 C) (with freeze protection option)
- Heaters
- Required piping
- Pressure/temperature taps
- Isolation valves for dual pump systems
- VFD available on sizes 070-150, and VFD compatibility on all models

# Table of contents


| | Page |
|---|---|
| Features/Benefits | 1-4 |
| Model Number Nomenclature | 5, 6 |
| AHRI Capacity Ratings | 7, 8 |
| Physical Data | 9-18 |
| Options and Accessories | 19-21 |
| Base Unit Dimensions | 22-30 |
| Accessory Dimensions | 31-33 |
| Selection Procedure | 34 |
| Performance Data | 35-63 |
| Typical Piping and Wiring | 64-67 |
| Electrical Data | 68-89 |
| Controls | 90-92 |
| Typical Control Wiring Schematic | 93 |
| Application Data | 94-101 |
| Guide Specifications | 102-108 |

The factory-installed and tested hydronic package provides faster, simpler and less expensive installation.

**Digital scroll compressors** are available as a factory-installed option on sizes 010, 015, and 018-090. These allow for incremental unloading with capacity modulation to better match building load when compared to standard scroll compressors.

## Environmentally balanced

Carrier's Puron® refrigerant (R-410A) is a responsible choice for protecting the earth's ozone layer. Puron refrigerant is an HFC refrigerant that does not contain chlorine that is damaging to the ozone layer. Puron refrigerant is unaffected by the Montreal Protocol. Puron refrigerant is a safe, non-toxic*, efficient, and environmentally balanced refrigerant for the future.

## Durable construction

The 30RAP chillers have a structurally sound base that can be point-loaded; therefore, no perimeter base rail is required. All 30RAP units have weatherized cabinets constructed of heavy-duty galvanized steel with exterior panels painted with corrosion-resistant baked enamel. Inside and outside surfaces are protected to ensure long life and good appearance. The durable, galvanized steel, painted components exceed the requirements of the 500-hour salt spray test per ASTM (American Society for Testing and Materials) B117.

## *Comfort*Link controls speak your language

The *Comfort*Link controls communicate in plain English, making it as easy as possible to monitor and control each AquaSnap chiller while accurately maintaining fluid temperatures. The large scrolling marquee display acts as a window into the unit's operation, providing easy-to-read information about chiller performance and over 15 diagnostic functions. Carrier's 30 Series chillers' *Comfort*Link controls provide features such as chilled water temperature reset, demand limiting, compressor wear minimization and protection, temperature and pressure displays, and diagnostic functions. These controls result in higher chiller reliability, simplified training, and more productive service calls with correspondingly lower operational and maintenance costs.

Carrier's exclusive accessory handheld Navigator™ display provides convenience and powerful information in the palm of your hand. The Navigator display helps technicians to quickly diagnose problems and even prevent them from occurring.

All AquaSnap units are ready to be used with the Carrier Comfort Network® (CCN) system.

A BACnet† communication option is also available for the i-Vu® Open control system or a third-party BACnet building automation system.

## AquaSnap units minimize the impact on your footprint, as well as your bottom line

The integrated hydronics and the chilled fluid storage tank's placement under the chiller minimize the footprint, allowing easy installation almost anywhere.

## Seismic certification

A seismic kit is available which will result in a unit SDS (seismic design acceleration parameter) level of 2.5 for 30RAP010-060 units, or a unit SDS level of 2.1 for 30RAP070-150 units.

## Novation® heat exchanger technology

The Novation heat exchanger design with microchannel (MCHX) condenser coil is a robust, cost effective alternative to traditional coil design. These coils are offered coated or uncoated to match coil protection to site conditions. The e-coated version of this coil can withstand an 8,000-hour salt spray test in accordance with ASTM B-117 Standard. The Carrier Electronic Catalog (E-Cat) can be used to determine whether or not corrosion protection is recommended for particular applications in coastal/marine environments. Following the input of the requested data, the E-Cat program output will recommend the appropriate coil to be used. Other factors described in "Selection Guide: Environmental Corrosion Protection" catalog number 04-581061-01 must also be considered to determine if corrosion protection is required.

Microchannel coils are more robust than other coil types, making them easier to clean without causing damage to the coil.

Due to the compact, all-aluminum design, microchannel coils will reduce average unit operating weight by 25% compared to the previous 30RA units. The streamlined MCHX coil design also reduces refrigerant charge by an average of 60% compared to previous 30RA units.

* Under ASHRAE Standard 34-1992, R-410A is classified as an A1 refrigerant.
† Sponsored by ASHRAE (American Society of Heating, Refrigerating, and Air-Conditioning Engineers).

# Features/Benefits (cont)

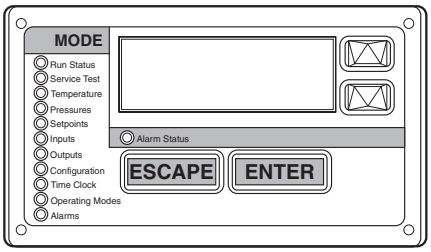


**SCROLLING MARQUEE DISPLAY**

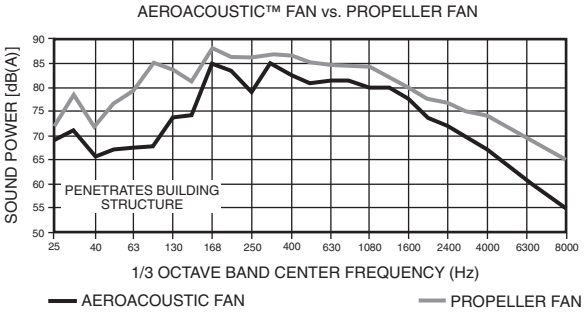


**AEROACOUSTIC FAN VS PROPELLER FAN**

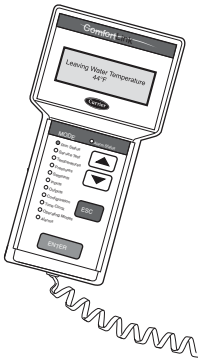


**NAVIGATOR™ DISPLAY MODULE**

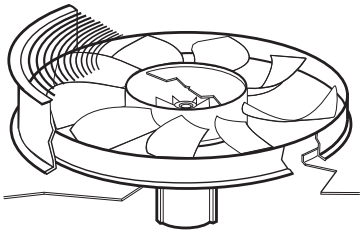

**LOW-SOUND AEROACOUSTIC FAN WITH NIGHTTIME LOW SOUND**

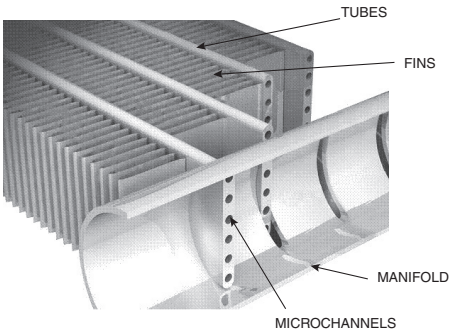


**NOVATION® HEAT EXCHANGER TECHNOLOGY WITH MICROCHANNEL CONDENSER COILS**

# Model number nomenclature

## AQUASNAP® CHILLER MODEL NUMBER DESIGNATION, 30RAP010-060

**30RA P 010 6 D C 0 6 0 0 0**

**30RA** – Air-Cooled AquaSnap Chiller

**Refrigerant Type**
**P** – Puron®

**Unit Sizes**
010 020 045
011 025 050
015 030 055
016 035 060
018 040

**Voltage**
**1** – 575-3-60
**2** – 380-3-60
**5** – 208/230-3-60
**6** – 460-3-60
**9** – 380/415-3-50

**Condenser Coil and Low Sound Options**
**5** – MCHX, Value Sound Fan
**6** – MCHX, E-Coat, Value Sound Fan
**D** – MCHX, AeroAcoustic Fan
**F** – MCHX, E-Coat, AeroAcoustic Fan
**J** – MCHX, AeroAcoustic Fan, Compressor Blanket(s)
**K** – MCHX, E-Coat, AeroAcoustic Fan, Compressor Blanket(s)

**Revision Level**
**C** – Current Revision Level

**Hydronic System**
**0** – No Pump
**2** – Single Pump, 1.5 Hp
**3** – Single Pump, 3 Hp
**4** – Single Pump, 3 Hp High Head
**5** – Single Pump, 5 Hp
**6** – Single Pump, 5 Hp High Head
**7** – Single Pump, 7.5 Hp
**Z** – Single Pump, 10 Hp
**9** – Dual Pump, 1.5 Hp
**B** – Dual Pump, 3 Hp
**C** – Dual Pump, 3 Hp High Head
**D** – Dual Pump, 5 Hp
**F** – Dual Pump, 5 Hp High Head
**G** – Dual Pump, 7.5 Hp
**H** – Dual Pump, 10 Hp

**Packaging/Security Options**
**0** – Std Packaging
**4** – Security Grilles/Hail Guards Only
**8** – Skid Only
**D** – Skid, Security Grilles/Hail Guards
**J** – Skid, Top Crate, Bag
**N** – Skid, Top Crate, Bag, Security Grilles/Hail Guards

**Controls/Communications Options**
**0** – Std
**1** – Std, BACnet Communication
**5** – EMM
**6** – EMM, BACnet Communication
**B** – EMM, GFI
**C** – EMM, GFI, BACnet Communication
**H** – GFI
**J** – GFI, BACnet Communication

**Electrical Options**
**0** – No Disconnect, No Cooler Heater
**1** – No Disconnect, Cooler Heater
**D** – Non-Fused Disconnect, No Cooler Heater
**F** – Non-Fused Disconnect, Cooler Heater

**Ambient/Capacity Control/High SCCR Options*†**
**0** – Std Comp
**1** – Hot Gas Bypass
**2** – Digital Comp
**3** – Std Comp, High SCCR
**4** – Hot Gas Bypass, High SCCR
**5** – Digital Comp, High SCCR
**6** – Low Ambient, Std Comp
**7** – Low Ambient, Hot Gas Bypass
**8** – Low Ambient, Digital Comp
**9** – Low Ambient, Std Comp, High SCCR
**B** – Low Ambient, Hot Gas Bypass, High SCCR
**C** – Low Ambient, Digital Comp, High SCCR
**D** – Std Comp, High-Efficiency Variable Condenser Fans
**F** – Hot Gas Bypass, High-Efficiency Variable Condenser Fans
**G** – Digital Comp, High-Efficiency Variable Condenser Fans
**H** – Std Comp, High SCCR, High-Efficiency Variable Condenser Fans
**J** – Hot Gas Bypass, High SCCR, High-Efficiency Variable Condenser Fans
**K** – Digital Comp, High SCCR, High-Efficiency Variable Condenser Fans

LEGEND
**EMM** — Energy Management Module
**GFI** — Ground Fault Interrupting
**MCHX** — Microchannel Heat Exchanger
**SCCR** — Short Circuit Current Rating

*High-efficiency variable condenser fans (codes D, F, G, H, J, and K) are not available on unit sizes 010 and 015, and are the only choices for sizes 011 and 016.
†Digital compressors (codes 2, 5, 8, C, G, and K) are not available on unit sizes 011 and 016.

### *Quality Assurance*

Certified to ISO 9001

# Model number nomenclature (cont)

## AQUASNAP® CHILLER MODEL NUMBER DESIGNATION, 30RAP070-150

**30RA P 070 6 D B 0 6 0 0 0**

**30RA** – Air-Cooled AquaSnap Chiller

**Refrigerant Type**
**P** – Puron®

**Unit Sizes**
070 115
080 130
090 150
100

**Voltage**
**1** – 575-3-60
**2** – 380-3-60
**5** – 208/230-3-60
**6** – 460-3-60
**9** – 380/415-3-50

**Condenser Coil and Low Sound Options**
**0** – Aluminum/Copper, Value Sound Fan
**1** – Copper/Copper, Value Sound Fan
**2** – Aluminum/Copper, Pre-Coat, Value Sound Fan
**3** – Aluminum/Copper, E-Coat, Value Sound Fan
**4** – Copper/Copper, E-Coat, Value Sound Fan
**5** – MCHX, Value Sound Fan
**6** – MCHX, E-Coat, Value Sound Fan
**7** – Aluminum/Copper, AeroAcoustic™ Fan
**8** – Copper/Copper, AeroAcoustic Fan
**9** – Copper/Aluminum, Pre-Coat, AeroAcoustic Fan
**B** – Copper/Aluminum, E-Coat, AeroAcoustic Fan
**C** – Copper/Copper, E-Coat, AeroAcoustic Fan
**D** – MCHX, AeroAcoustic Fan
**F** – MCHX, E-Coat, AeroAcoustic Fan
**J** – MCHX, AeroAcoustic Fan, Compressor Blanket(s)
**K** – MCHX, E-Coat, AeroAcoustic Fan, Compressor Blanket(s)
**L** – Aluminum/Copper, AeroAcoustic Fan, Compressor Blanket(s)
**M** – Copper/Copper, AeroAcoustic Fan, Compressor Blanket(s)
**N** – Aluminum/Copper, Pre-Coat, AeroAcoustic Fan, Compressor Blanket(s)
**P** – Aluminum/Copper, E-Coat, AeroAcoustic Fan, Compressor Blanket(s)
**Q** – Copper/Copper, E-Coat, AeroAcoustic Fan, Compressor Blanket(s)

**Revision Level**
**B** – Current Revision Level

**Hydronic System**
**0** – No Pump
**1** – Single Pump, 3 Hp
**2** – Single Pump, 5 Hp
**3** – Single Pump, 7.5 Hp
**4** – Single Pump, 10 Hp
**5** – Single Pump, 15 Hp
**6** – Dual Pump, 3 Hp
**7** – Dual Pump, 5 Hp
**8** – Dual Pump, 7.5 Hp
**9** – Dual Pump, 10 Hp
**B** – Dual Pump, 15 Hp
**D** – Single Pump, 5 Hp with VFD
**F** – Single Pump, 7.5 Hp with VFD
**G** – Single Pump, 10 Hp with VFD
**H** – Single Pump, 15 Hp with VFD
**J** – Dual Pump, 3 Hp with VFD
**K** – Dual Pump, 5 Hp with VFD
**L** – Dual Pump, 7.5 Hp with VFD
**M** – Dual Pump, 10 Hp with VFD
**N** – Dual Pump, 15 Hp with VFD

**Ambient/Capacity Control/High SCCR Options**
**0** – Std Comp
**1** – Hot Gas Bypass
**2** – Digital Comp
**3** – Std Comp, High SCCR
**4** – Hot Gas Bypass, High SCCR
**5** – Digital Comp, High SCCR
**6** – Low Ambient, Std Comp
**7** – Low Ambient, Hot Gas Bypass
**8** – Low Ambient, Digital Comp
**9** – Low Ambient, Std Comp, High SCCR
**B** – Low Ambient, Hot Gas Bypass, High SCCR
**C** – Low Ambient, Digital Comp, High SCCR
**D** – Std Comp, Suction Service Valve
**F** – Hot Gas Bypass, Suction Service Valve
**G** – Digital Comp, Suction Service Valve
**H** – Std Comp, High SCCR, Suction Service Valve
**J** – Hot Gas Bypass, High SCCR, Suction Service Valve
**K** – Digital Comp, High SCCR, Suction Service Valve
**L** – Low Ambient, Std Comp, Suction Service Valves
**M** – Low Ambient, Hot Gas Bypass, Suction Service Valves
**N** – Low Ambient, Digital Comp, Suction Service Valves
**P** – Low Ambient, Std Comp, High SCCR, Suction Service Valves
**Q** – Low Ambient, Hot Gas Bypass, High SCCR, Suction Service Valves
**R** – Low Ambient, Digital Comp, High SCCR, Suction Service Valves

**Controls/Communications Options**
**0** – Std
**1** – Std, BACnet Communication
**5** – EMM
**6** – EMM, BACnet Communication
**B** – EMM, GFI
**C** – EMM, GFI, BACnet Communication
**H** – GFI
**J** – GFI, BACnet Communication

**Electrical Options**
**0** – Single Point, No Disconnect, No Cooler Heater
**1** – Single Point, No Disconnect, Cooler Heater
**2** – Single Point, Non-Fused Disconnect, No Cooler Heater
**3** – Single Point, Non-Fused Disconnect, Cooler Heater
**4** – Dual Point, No Disconnect, No Cooler Heater
**5** – Dual Point, No Disconnect, Cooler Heater

**Packaging/Security Options**
**0** – Std Packaging
**4** – Security Grilles/Hail Guards Only
**8** – Skid Only
**D** – Skid, Security Grilles/Hail Guards
**J** – Skid, Top Crate, Bag
**N** – Skid, Top Crate, Bag, Security Grilles/Hail Guards

LEGEND

**EMM** — Energy Management Module
**GFI** — Ground Fault Interrupting
**MCHX** — Microchannel Heat Exchanger
**SCCR** — Short Circuit Current Rating
**VFD** — Variable Frequency Drive

***Quality Assurance***

Certified to ISO 9001

# AHRI* capacity ratings

### 30RAP010-150 UNITS WITH FIXED SPEED FANS

| UNIT 30RAP 60 Hz | CAPACITY | | COMPRESSOR POWER INPUT (kW) | FAN POWER (kW) | TOTAL POWER (kW) | FULL LOAD | | IPLV | | COOLER FLOW RATE | | CHILLER WATER PRESSURE DROP | |
|---|---|---|---|---|---|---|---|---|---|---|---|---|---|
| | Tons | kW | | | | EER | COP | EER | COP | GPM | L/s | Ft wg | kPa |
| **010** | 10.5 | 36.8 | 10.7 | 1.2 | 12.0 | 10.5 | 3.1 | 14.2 | 4.2 | 25.1 | 1.6 | 14.8 | 44.2 |
| **015** | 14.0 | 49.2 | 15.6 | 1.3 | 16.8 | 10.0 | 2.9 | 13.2 | 3.9 | 33.5 | 2.1 | 16.8 | 50.2 |
| **018** | 16.1 | 56.6 | 15.6 | 3.0 | 18.6 | 10.4 | 3.0 | 14.6 | 4.3 | 38.5 | 2.4 | 16.7 | 49.9 |
| **020** | 18.8 | 66.1 | 18.9 | 2.9 | 21.7 | 10.4 | 3.0 | 14.6 | 4.2 | 45.2 | 2.9 | 15.2 | 45.4 |
| **025** | 23.4 | 82.3 | 24.5 | 2.8 | 27.0 | 10.4 | 3.0 | 15.4 | 4.5 | 56.3 | 3.6 | 19.1 | 57.0 |
| **030** | 28.3 | 99.5 | 30.7 | 2.7 | 33.4 | 10.2 | 3.0 | 15.2 | 4.5 | 68.0 | 4.3 | 28.4 | 84.9 |
| **035** | 34.4 | 121.0 | 35.9 | 3.8 | 39.7 | 10.4 | 3.0 | 14.9 | 4.4 | 82.5 | 5.2 | 19.1 | 57.0 |
| **040** | 38.9 | 136.8 | 42.3 | 3.8 | 46.1 | 10.1 | 3.0 | 15.4 | 4.5 | 93.4 | 5.9 | 20.0 | 59.7 |
| **045** | 43.4 | 152.6 | 48.1 | 3.4 | 51.5 | 10.1 | 3.0 | 15.4 | 4.5 | 104.1 | 6.6 | 22.5 | 67.2 |
| **050** | 48.0 | 168.8 | 52.6 | 3.8 | 56.4 | 10.2 | 3.0 | 15.3 | 4.5 | 115.1 | 7.3 | 19.6 | 58.5 |
| **055** | 51.8 | 182.2 | 56.4 | 5.3 | 61.7 | 10.1 | 3.0 | 14.6 | 4.3 | 124.2 | 7.8 | 17.6 | 52.5 |
| **060** | 56.0 | 196.9 | 60.8 | 5.3 | 66.2 | 10.2 | 3.0 | 14.5 | 4.2 | 134.4 | 8.5 | 20.5 | 61.2 |
| **070** | 68.9 | 242.3 | 75.0 | 6.4 | 81.4 | 10.2 | 3.0 | 15.2 | 4.5 | 165.4 | 10.4 | 19.6 | 58.6 |
| **080** | 77.4 | 272.2 | 82.3 | 7.6 | 89.9 | 10.3 | 3.0 | 15.5 | 4.5 | 185.7 | 11.7 | 21.2 | 63.4 |
| **090** | 84.0 | 295.4 | 90.2 | 7.6 | 97.8 | 10.3 | 3.0 | 15.8 | 4.6 | 201.6 | 12.7 | 22.7 | 67.9 |
| **100** | 98.0 | 344.7 | 106.8 | 8.9 | 115.7 | 10.2 | 3.0 | 15.5 | 4.5 | 235.2 | 14.8 | 22.0 | 65.8 |
| **115** | 111.8 | 392.2 | 120.0 | 10.2 | 130.2 | 10.3 | 3.0 | 15.6 | 4.6 | 268.4 | 16.9 | 23.6 | 70.5 |
| **130** | 125.1 | 440.0 | 136.8 | 11.4 | 148.2 | 10.1 | 3.0 | 15.5 | 4.5 | 300.2 | 18.9 | 23.6 | 70.5 |
| **150** | 136.9 | 481.5 | 149.3 | 12.7 | 162.0 | 10.1 | 3.0 | 15.2 | 4.5 | 328.7 | 20.7 | 24.3 | 72.6 |

| UNIT 30RAP 50 Hz | CAPACITY | | COMPRESSOR POWER INPUT (kW) | FAN POWER (kW) | TOTAL POWER (kW) | FULL LOAD | | IPLV | | COOLER FLOW RATE | | CHILLER WATER PRESSURE DROP | |
|---|---|---|---|---|---|---|---|---|---|---|---|---|---|
| | Tons | kW | | | | EER | COP | EER | COP | GPM | L/s | Ft wg | kPa |
| **010** | 8.8 | 31.0 | 8.8 | 0.9 | 9.7 | 11.0 | 3.2 | 15.2 | 4.5 | 21.2 | 1.3 | 10.6 | 31.7 |
| **015** | 11.5 | 40.3 | 12.2 | 0.9 | 13.1 | 10.5 | 3.1 | 14.2 | 4.2 | 27.5 | 1.7 | 11.5 | 34.3 |
| **018** | 13.5 | 47.6 | 12.8 | 2.1 | 14.9 | 10.9 | 3.2 | 15.5 | 4.5 | 32.5 | 2.0 | 12.0 | 35.8 |
| **020** | 15.9 | 55.8 | 15.4 | 2.2 | 17.6 | 10.8 | 3.2 | 15.6 | 4.6 | 38.1 | 2.4 | 10.9 | 32.5 |
| **025** | 19.8 | 69.5 | 19.8 | 2.2 | 21.9 | 10.8 | 3.2 | 16.4 | 4.8 | 47.4 | 3.0 | 13.7 | 40.9 |
| **030** | 23.6 | 83.0 | 25.0 | 2.3 | 27.3 | 10.4 | 3.1 | 16.1 | 4.7 | 56.6 | 3.6 | 19.9 | 59.4 |
| **035** | 28.6 | 100.7 | 28.8 | 2.8 | 31.6 | 10.9 | 3.2 | 15.8 | 4.6 | 68.7 | 4.3 | 13.4 | 40.0 |
| **040** | 32.1 | 112.8 | 34.0 | 2.8 | 36.8 | 10.5 | 3.1 | 16.1 | 4.7 | 77.0 | 4.9 | 14.1 | 42.1 |
| **045** | 35.7 | 125.6 | 38.5 | 2.7 | 41.2 | 10.4 | 3.0 | 16.0 | 4.7 | 85.7 | 5.4 | 15.6 | 46.6 |
| **050** | 39.8 | 140.0 | 42.1 | 2.7 | 44.8 | 10.7 | 3.1 | 15.9 | 4.7 | 95.4 | 6.0 | 13.7 | 40.9 |
| **055** | 43.1 | 151.6 | 45.4 | 3.7 | 49.1 | 10.5 | 3.1 | 15.4 | 4.5 | 103.5 | 6.5 | 12.4 | 37.0 |
| **060** | 45.5 | 160.2 | 48.1 | 4.0 | 52.1 | 10.5 | 3.1 | 15.4 | 4.5 | 109.3 | 6.9 | 13.8 | 41.1 |
| **070** | 59.2 | 208.2 | 61.9 | 4.8 | 66.7 | 10.6 | 3.1 | 15.8 | 4.6 | 143.1 | 9.0 | 14.6 | 43.6 |
| **080** | 65.8 | 231.4 | 68.0 | 5.5 | 73.5 | 10.7 | 3.1 | 16.6 | 4.9 | 157.9 | 10.0 | 15.0 | 44.8 |
| **090** | 71.3 | 250.8 | 75.0 | 5.5 | 80.4 | 10.6 | 3.1 | 16.5 | 4.8 | 171.2 | 10.8 | 16.9 | 50.5 |
| **100** | 81.6 | 287.0 | 85.7 | 6.4 | 92.1 | 10.6 | 3.1 | 16.3 | 4.8 | 195.8 | 12.4 | 16.4 | 49.0 |
| **115** | 93.2 | 327.8 | 98.8 | 7.3 | 106.2 | 10.5 | 3.1 | 16.3 | 4.8 | 223.8 | 14.1 | 17.7 | 52.9 |
| **130** | 103.9 | 365.4 | 110.7 | 8.2 | 119.0 | 10.5 | 3.1 | 16.0 | 4.7 | 249.3 | 15.7 | 16.7 | 49.9 |
| **150** | 114.6 | 403.0 | 122.6 | 9.1 | 131.8 | 10.4 | 3.0 | 15.8 | 4.6 | 275.0 | 17.3 | 17.4 | 52.0 |

LEGEND

**COP** — Coefficient of Performance
**EER** — Energy Efficiency Ratio
**IPLV** — Integrated Part Load Value

* Air-Conditioning, Heating, and Refrigeration Institute.

NOTE: Based on AHRI-550/590 standard rating conditions. All ratings in the above table were generated in Packaged Chiller Builder version 3.49q, using uncoated condenser coils and no additional chiller options. Refer to the most current version of the Packaged Chiller Builder to obtain the most up-to-date data.

AHRI CERTIFIED®
www.ahridirectory.org
Air-Cooled Chillers
AHRI Standards 550/590 and 551/591

# AHRI* capacity ratings (cont)

### 30RAP011-060 WITH GREENSPEED INTELLIGENCE

| UNIT 30RAP 60 Hz | CAPACITY | | COMPRESSOR POWER INPUT (kW) | FAN POWER (kW) | TOTAL POWER (kW) | FULL LOAD | | IPLV | | COOLER FLOW RATE | | CHILLER WATER PRESSURE DROP | |
|---|---|---|---|---|---|---|---|---|---|---|---|---|---|
| | Tons | kW | | | | EER | COP | EER | COP | GPM | L/s | Ft wg | kPa |
| **011** | 9.7 | 34.1 | 9.8 | 1.2 | 11.0 | 10.6 | 3.1 | 16.8 | 4.9 | 23.4 | 1.5 | 12.9 | 38.5 |
| **016** | 13.6 | 47.8 | 14.9 | 1.3 | 16.1 | 10.1 | 3.0 | 16.2 | 4.7 | 32.6 | 2.1 | 12.1 | 36.1 |
| **018** | 16.1 | 56.6 | 15.6 | 3.0 | 18.6 | 10.4 | 3.0 | 16.0 | 4.7 | 38.5 | 2.4 | 16.7 | 49.9 |
| **020** | 18.8 | 66.1 | 18.9 | 2.9 | 21.7 | 10.4 | 3.0 | 15.9 | 4.7 | 45.2 | 2.9 | 15.2 | 45.4 |
| **025** | 23.4 | 82.3 | 24.2 | 2.8 | 27.0 | 10.4 | 3.0 | 16.4 | 4.8 | 56.3 | 3.6 | 19.1 | 57.0 |
| **030** | 28.3 | 99.5 | 30.7 | 2.7 | 33.4 | 10.2 | 3.0 | 16.3 | 4.8 | 68.0 | 4.3 | 28.4 | 84.9 |
| **035** | 34.4 | 121.0 | 35.9 | 3.8 | 39.7 | 10.4 | 3.0 | 16.2 | 4.7 | 82.5 | 5.2 | 19.1 | 57.0 |
| **040** | 38.9 | 136.8 | 42.3 | 3.8 | 46.1 | 10.1 | 3.0 | 16.3 | 4.8 | 93.4 | 5.9 | 20.0 | 59.7 |
| **045** | 43.4 | 152.6 | 48.1 | 3.4 | 51.5 | 10.1 | 3.0 | 16.5 | 4.8 | 104.1 | 6.6 | 22.5 | 67.2 |
| **050** | 48.0 | 168.8 | 52.6 | 3.8 | 56.4 | 10.2 | 3.0 | 16.3 | 4.8 | 115.1 | 7.3 | 19.6 | 58.5 |
| **055** | 51.8 | 182.2 | 56.4 | 5.3 | 61.7 | 10.1 | 3.0 | 16.0 | 4.7 | 124.2 | 7.8 | 17.6 | 52.5 |
| **060** | 56.0 | 196.9 | 60.8 | 5.3 | 66.2 | 10.2 | 3.0 | 16.0 | 4.7 | 134.4 | 8.5 | 20.5 | 61.2 |

| UNIT 30RAP 50 Hz | CAPACITY | | COMPRESSOR POWER INPUT (kW) | FAN POWER (kW) | TOTAL POWER (kW) | FULL LOAD | | IPLV | | COOLER FLOW RATE | | CHILLER WATER PRESSURE DROP | |
|---|---|---|---|---|---|---|---|---|---|---|---|---|---|
| | Tons | kW | | | | EER | COP | EER | COP | GPM | L/s | Ft wg | kPa |
| **011** | 8.0 | 28.1 | 7.9 | 0.9 | 8.8 | 10.9 | 3.2 | 17.4 | 5.1 | 19.2 | 1.2 | 8.8 | 26.3 |
| **016** | 11.2 | 39.4 | 11.9 | 0.9 | 12.8 | 10.5 | 3.1 | 16.8 | 4.9 | 26.8 | 1.7 | 8.4 | 25.1 |
| **018** | 13.5 | 47.6 | 12.8 | 2.1 | 14.9 | 10.9 | 3.2 | 16.5 | 4.8 | 32.5 | 2.0 | 12.0 | 35.8 |
| **020** | 15.9 | 55.8 | 15.4 | 2.2 | 17.6 | 10.8 | 3.2 | 16.5 | 4.8 | 38.1 | 2.4 | 10.9 | 32.5 |
| **025** | 19.8 | 69.5 | 19.8 | 2.2 | 21.9 | 10.8 | 3.2 | 17.0 | 5.0 | 47.4 | 3.0 | 13.7 | 40.9 |
| **030** | 23.6 | 83.0 | 25.0 | 2.3 | 27.3 | 10.4 | 3.1 | 16.9 | 5.0 | 56.6 | 3.6 | 19.9 | 59.4 |
| **035** | 28.6 | 100.7 | 28.8 | 2.8 | 31.6 | 10.9 | 3.2 | 16.8 | 4.9 | 68.7 | 4.3 | 13.4 | 40.0 |
| **040** | 32.1 | 112.8 | 34.0 | 2.8 | 36.8 | 10.5 | 3.1 | 16.8 | 4.9 | 77.0 | 4.9 | 14.1 | 42.1 |
| **045** | 35.7 | 125.6 | 38.5 | 2.7 | 41.2 | 10.4 | 3.0 | 16.7 | 4.9 | 85.7 | 5.4 | 15.6 | 46.6 |
| **050** | 39.8 | 140.0 | 42.1 | 2.7 | 44.8 | 10.7 | 3.1 | 17.0 | 5.0 | 95.4 | 6.0 | 13.7 | 40.9 |
| **055** | 43.1 | 151.6 | 45.4 | 3.7 | 49.1 | 10.5 | 3.1 | 16.5 | 4.8 | 103.5 | 6.5 | 12.4 | 37.0 |
| **060** | 45.5 | 160.2 | 48.1 | 4.0 | 52.1 | 10.5 | 3.1 | 16.5 | 4.8 | 109.3 | 6.9 | 13.8 | 41.1 |

LEGEND

**COP** — Coefficient of Performance
**EER** — Energy Efficiency Ratio
**IPLV** — Integrated Part Load Value

* Air-Conditioning, Heating, and Refrigeration Institute.

NOTE: Based on AHRI-550/590 standard rating conditions. All ratings in the above table were generated in Packaged Chiller Builder version 3.49q, using uncoated condenser coils and no additional chiller options. Refer to the most current version of the Packaged Chiller Builder to obtain the most up-to-date data.

AHRI CERTIFIED®
www.ahridirectory.org
Air-Cooled Chillers
AHRI Standards 550/590 and 551/591

# Physical data

## ENGLISH

| UNIT 30RAP | 010 | 011 | 015 | 016 | 018 | 020 | 025 |
|---|---|---|---|---|---|---|---|
| **OPERATING WEIGHT (lb)** | | | | | | | |
| **MCHX Condenser Coil, No Pump** | 704 | 762 | 718 | 800 | 1125 | 1133 | 1242 |
| **MCHX Condenser Coil, Single Pump (60 Hz only)** | 866 | 924 | 880 | 962 | 1288 | 1296 | 1405 |
| **MCHX Condenser Coil, Dual Pump (60 Hz only)** | 1029 | 1087 | 1043 | 1125 | 1450 | 1458 | 1567 |
| **Al-Cu Condenser Coil, No Pump** | — | — | — | — | — | — | — |
| **Al-Cu Condenser Coil, Single Pump (60 Hz only)** | — | — | — | — | — | — | — |
| **Al-Cu Condenser Coil, Dual Pump (60 Hz only)** | — | — | — | — | — | — | — |
| **Cu-Cu Condenser Coil, No Pump** | — | — | — | — | — | — | — |
| **Cu-Cu Condenser Coil, Single Pump (60 Hz only)** | — | — | — | — | — | — | — |
| **Cu-Cu Condenser Coil, Dual Pump (60 Hz only)** | — | — | — | — | — | — | — |
| **REFRIGERANT TYPE** | R-410A, EXV Controlled System | | | | | | |
| **Total Refrigerant Charge (lb)** | 8.6 | 8.3 | 9.6 | 10.0 | 14.6 | 15.2 | 16.7 |
| **Refrigerant Charge (lb) Ckt A/Ckt B** | 8.6/— | 8.3/— | 9.6/— | 10.0/— | 14.6/— | 15.2/— | 16.7/— |
| **Total Refrigerant Charge RTPF (lb)** | — | | — | | — | — | — |
| **Refrigerant Charge RTPF (lb) Ckt A/Ckt B** | — | | — | | — | — | — |
| **COMPRESSORS** | Scroll, Hermetic | | | | | | |
| **Quantity** | 1 | 2 | 1 | 2 | 2 | 2 | 2 |
| **Speed (Rpm)** | 3500 (60 Hz)/2900 (50 Hz) | | | | | | |
| **(Qty) Tons, Ckt A** | (1) 11 | (2) 9.7 | (1) 15 | (2) 13.6 | (2) 9 | (2) 10 | (2) 13 |
| **(Qty) Tons, Ckt B** | — | — | — | — | — | — | — |
| **Oil Charge (Pt) Ckt A/Ckt B** | 6.9/— | 6.4 | 6.9/— | 9.1 | 13.8/— | 13.8/— | 13.8/— |
| **No. Capacity Steps** | | | | | | | |
| **Standard** | 1 | 2 | 1 | 2 | 2 | 2 | 2 |
| **With Hot Gas Bypass** | — | — | — | — | 3 | 3 | 3 |
| **Digital Compressor Option** | 13 | — | 13 | — | 22 | 22 | 22 |
| **Minimum Capacity Step (%)** | | | | | | | |
| **Standard** | 100 | 40 | 100 | 40 | 50 | 50 | 50 |
| **With Hot Gas Bypass** | — | — | — | — | 20 | 24 | 29 |
| **Digital Compressor Option** | 20 | — | 20 | — | 17 | 17 | 17 |
| **Capacity (%)** | | | | | | | |
| **Circuit A** | 100 | 100 | 100 | 100 | 100 | 100 | 100 |
| **Circuit B** | — | — | — | — | — | — | — |
| **COOLER** | Brazed, Direct-Expansion Plate Heat Exchanger | | | | | | |
| **Weight (lb) (empty)** | 22.4 | 22.4 | 27.5 | 31.8 | 31.8 | 40.3 | 46.3 |
| **Net Fluid Volume (gal)** | 0.6 | 0.6 | 0.8 | 0.9 | 0.9 | 1.2 | 1.4 |
| **Maximum Refrigerant Pressure (psig)** | 505 | 505 | 505 | 505 | 505 | 505 | 505 |
| **Maximum Water-Side Pressure Without Pump(s) (psig)** | 300 | 300 | 300 | 300 | 300 | 300 | 300 |
| **Maximum Water-Side Pressure With Pump(s) (psig)** | 150 | 150 | 150 | 150 | 150 | 150 | 150 |
| **CHILLER WATER CONNECTIONS (in.)** | | | | | | | |
| **Inlet and Outlet, Victaulic (IPS Carbon Steel)*** | 2 | 2 | 2 | 2 | 2 | 2 | 2 |
| **Drain (NPT)** | 1/4 | 1/4 | 1/4 | 1/4 | 1/4 | 1/4 | 1/4 |
| **CONDENSER FANS** | | | | | | | |
| **Standard Low-Sound AeroAcoustic™ Type** | Plastic Type, Axial, Vertical Discharge | | | | | | |
| **Fan Speed (Rpm)** | 850 (60 Hz)/710 (50 Hz) | | | | | | |
| **No. Blades...Diameter (in.)** | 9...30 | 9...30 | 9...30 | 9...30 | 9...30 | 9...30 | 9...30 |
| **No. Fans** | 1 | 1 | 1 | 1 | 2 | 2 | 2 |
| **Total Airflow 60 Hz (Cfm)** | 9400 | 9400 | 9400 | 9400 | 17,500 | 17,500 | 19,400 |
| **Total Airflow 50 Hz (Cfm)** | 7849 | 7849 | 7849 | 7849 | 14,613 | 14,613 | 16,199 |
| **Optional Value Sound Type** | Propeller Type, Axial, Vertical Discharge | | | | | | |
| **Fan Speed (Rpm)** | 1140 (60 Hz)/950 (50 Hz) | | | | | | |
| **No. Blades...Diameter (in.)** | 4...30 | 4...30 | 4...30 | 4...30 | 4...30 | 4...30 | 4...30 |
| **No. Fans** | 1 | 1 | 1 | 1 | 2 | 2 | 2 |
| **Total Airflow 60 Hz (Cfm)** | 10,100 | 10,100 | 10,100 | 10,100 | 18,500 | 18,500 | 20,900 |
| **Total Airflow 50 Hz (Cfm)** | 8434 | 8434 | 8434 | 8434 | 15,448 | 15,448 | 17,452 |
| **CONDENSER COILS** | Novation® MCHX Aluminum Tube, Aluminum Fin | | | | | | |
| **Quantity (Ckt A/Ckt B)** | 1/— | 1/— | 1/— | 1/— | 1/— | 1/— | 1/— |
| **Total Face Area (sq ft)** | 17 | 19 | 17 | 19 | 26 | 26 | 33 |
| **Maximum Refrigerant Pressure (psig)** | 656 | 656 | 656 | 656 | 656 | 656 | 656 |
| **HYDRONIC MODULE (Optional, 60 Hz only)†** | Pump(s), Strainer with Blowdown Valve, Expansion Tank, Pressure Taps, Drain and Vent Plugs, Flow Switch, and Balance Valve | | | | | | |
| **Pump** | Single or Dual, Centrifugal Monocell Pump(s), 3500 Rpm. Dual pumps with check valves and isolation valves. | | | | | | |
| **Expansion Tank Volume (gal) Total/Acceptance** | 4.4/3.2 | | | | | | |
| **CHASSIS DIMENSIONS (ft - in.)** | | | | | | | |
| **Length** | 5-7 | 5-7 | 5-7 | 5-7 | 7-5 | 7-5 | 7-5 |
| **Width** | 3-5 | 3-5 | 3-5 | 3-5 | 3-5 | 3-5 | 3-5 |
| **Height** | 5-6 | 5-6 | 5-6 | 5-6 | 5-6 | 5-6 | 6-6 |

LEGEND

**EXV** — Electronic Expansion Valve
**MCHX** — Microchannel Heat Exchanger
**RTPF** — Round Tube, Plate Fin (Condenser Coil)

*Unit connection is IPS Carbon Steel piping.
†Flow switch and strainer are standard on all units, with or without hydronic package.
NOTE: 30RAP chillers with Greenspeed intelligence are not available on unit sizes 010, 015, and 070-150.

# Physical data (cont)

## ENGLISH (cont)

| UNIT 30RAP | 030 | 035 | 040 | 045 | 050 | 055 | 060 |
|---|---|---|---|---|---|---|---|
| **OPERATING WEIGHT (lb)** | | | | | | | |
| **MCHX Condenser Coil, No Pump** | 1283 | 2163 | 2185 | 2238 | 2263 | 2369 | 2375 |
| **MCHX Condenser Coil, Single Pump (60 Hz only)** | 1446 | 2507 | 2529 | 2582 | 2606 | 2713 | 2719 |
| **MCHX Condenser Coil, Dual Pump (60 Hz only)** | 1608 | 2850 | 2872 | 2925 | 2950 | 3056 | 3062 |
| **Al-Cu Condenser Coil, No Pump** | — | — | — | — | — | — | — |
| **Al-Cu Condenser Coil, Single Pump (60 Hz only)** | — | — | — | — | — | — | — |
| **Al-Cu Condenser Coil, Dual Pump (60 Hz only)** | — | — | — | — | — | — | — |
| **Cu-Cu Condenser Coil, No Pump** | — | — | — | — | — | — | — |
| **Cu-Cu Condenser Coil, Single Pump (60 Hz only)** | — | — | — | — | — | — | — |
| **Cu-Cu Condenser Coil, Dual Pump (60 Hz only)** | — | — | — | — | — | — | — |
| **REFRIGERANT TYPE** | R-410A, EXV Controlled System | | | | | | |
| **Total Refrigerant Charge (lb)** | 19.6 | 29.2 | 29.9 | 33.5 | 33.7 | 34.3 | 34.5 |
| **Refrigerant Charge (lb) Ckt A/Ckt B** | 19.6/— | 14.3/14.9 | 14.9/15.0 | 16.5/17.0 | 16.7/17.0 | 16.9/17.4 | 17.1/17.4 |
| **Total Refrigerant Charge RTPF (lb)** | — | — | — | — | — | — | — |
| **Refrigerant Charge RTPF (lb) Ckt A/Ckt B** | — | — | — | — | — | — | — |
| **COMPRESSORS** | Scroll, Hermetic | | | | | | |
| **Quantity** | 2 | 4 | 4 | 4 | 4 | 4 | 4 |
| **Speed (Rpm)** | 3500 (60 Hz)/2900 (50 Hz) | | | | | | |
| **(Qty) Tons, Ckt A** | (2) 15 | (2) 10 | (2) 10 | (2) 11 | (2) 13 | (2) 13 | (2) 15 |
| **(Qty) Tons, Ckt B** | — | (2) 9 | (2) 11 | (2) 13 | (2) 13 | (2) 15 | (2) 15 |
| **Oil Charge (Pt) Ckt A/Ckt B** | 13.8/— | 13.8/13.8 | 13.8/13.8 | 13.8/13.8 | 13.8/13.8 | 13.8/13.8 | 13.8/13.8 |
| **No. Capacity Steps** | | | | | | | |
| **Standard** | 2 | 4 | 4 | 4 | 4 | 4 | 4 |
| **With Hot Gas Bypass** | 3 | 5 | 5 | 5 | 5 | 5 | 5 |
| **Digital Compressor Option** | 22 | 44 | 44 | 44 | 44 | 44 | 44 |
| **Minimum Capacity Step (%)** | | | | | | | |
| **Standard** | 50 | 23 | 23 | 24 | 25 | 23 | 25 |
| **With Hot Gas Bypass** | 32 | 9 | 11 | 12 | 14 | 13 | 16 |
| **Digital Compressor Option** | 17 | 9 | 8 | 8 | 8 | 8 | 8 |
| **Capacity (%)** | | | | | | | |
| **Circuit A** | 100 | 54 | 47 | 47 | 50 | 46 | 50 |
| **Circuit B** | — | 46 | 53 | 53 | 50 | 54 | 50 |
| **COOLER** | Brazed, Direct-Expansion Plate Heat Exchanger | | | | | | |
| **Weight (lb) (empty)** | 99.3 | 99.4 | 117.9 | 125.3 | 137.5 | 160.4 | 160.4 |
| **Net Fluid Volume (gal)** | 2.62 | 2.6 | 3.3 | 3.5 | 4.1 | 5.0 | 5.0 |
| **Maximum Refrigerant Pressure (psig)** | 565 | 565 | 565 | 565 | 565 | 565 | 565 |
| **Maximum Water-Side Pressure Without Pump(s) (psig)** | 300 | 300 | 300 | 300 | 300 | 300 | 300 |
| **Maximum Water-Side Pressure With Pump(s) (psig)** | 150 | 150 | 150 | 150 | 150 | 150 | 150 |
| **CHILLER WATER CONNECTIONS (in.)** | | | | | | | |
| **Inlet and Outlet, Victaulic (IPS Carbon Steel)*** | 2 | 2 1/2 | 2 1/2 | 2 1/2 | 2 1/2 | 2 1/2 | 2 1/2 |
| **Drain (NPT)** | 1/4 | 1/4 | 1/4 | 1/4 | 1/4 | 1/2 | 1/2 |
| **CONDENSER FANS** | | | | | | | |
| **Standard Low-Sound AeroAcoustic™ Type** | Plastic Type, Axial, Vertical Discharge | | | | | | |
| **Fan Speed (Rpm)** | 850 (60 Hz)/710 (50 Hz) | | | | | | |
| **No. Blades...Diameter (in.)** | 9...30 | 9...30 | 9...30 | 9...30 | 9...30 | 9...30 | 9...30 |
| **No. Fans** | 2 | 3 | 3 | 3 | 3 | 4 | 4 |
| **Total Airflow 60 Hz (Cfm)** | 19,400 | 29,600 | 29,600 | 30,500 | 30,500 | 38,800 | 38,800 |
| **Total Airflow 50 Hz (Cfm)** | 16,199 | 24,716 | 24,716 | 25,468 | 25,468 | 32,398 | 32,398 |
| **Optional Value Sound Type** | Propeller Type, Axial, Vertical Discharge | | | | | | |
| **Fan Speed (Rpm)** | 1140 (60 Hz)/950 (50 Hz) | | | | | | |
| **No. Blades...Diameter (in.)** | 4...30 | 4...30 | 4...30 | 4...30 | 4...30 | 4...30 | 4...30 |
| **No. Fans** | 2 | 3 | 3 | 3 | 3 | 4 | 4 |
| **Total Airflow 60 Hz (Cfm)** | 20,900 | 32,000 | 32,000 | 33,300 | 33,300 | 41,800 | 41,800 |
| **Total Airflow 50 Hz (Cfm)** | 17,452 | 26,720 | 26,720 | 27,805 | 27,805 | 34,903 | 34,903 |
| **CONDENSER COILS** | Novation® MCHX Aluminum Tube, Aluminum Fin | | | | | | |
| **Quantity (Ckt A/Ckt B)** | 1/— | 1/1 | 1/1 | 1/1 | 1/1 | 1/1 | 1/1 |
| **Total Face Area (sq ft)** | 33 | 53 | 53 | 66 | 66 | 66 | 66 |
| **Maximum Refrigerant Pressure (psig)** | 656 | 656 | 656 | 656 | 656 | 656 | 656 |
| **HYDRONIC MODULE (Optional, 60 Hz only)†** | Pump(s), Strainer with Blowdown Valve, Expansion Tank, Pressure Taps, Drain and Vent Plugs, Flow Switch, and Balance Valve | | | | | | |
| **Pump** | Single or Dual, Centrifugal Monocell Pump(s), 3500 Rpm. Dual pumps with check valves and isolation valves. | | | | | | |
| **Expansion Tank Volume (gal) Total/Acceptance** | 4.4/3.2 | 10.3/10.3 | | | | | |
| **CHASSIS DIMENSIONS (ft - in.)** | | | | | | | |
| **Length** | 7-5 | 7-5 | 7-5 | 7-5 | 7-5 | 7-5 | 7-5 |
| **Width** | 3-5 | 7-9 | 7-9 | 7-9 | 7-9 | 7-9 | 7-9 |
| **Height** | 6-6 | 5-6 | 5-6 | 6-6 | 6-6 | 6-6 | 6-6 |

LEGEND

**EXV** — Electronic Expansion Valve
**MCHX** — Microchannel Heat Exchanger
**RTPF** — Round Tube, Plate Fin (Condenser Coil)

*Unit connection is IPS Carbon Steel piping.
†Flow switch and strainer are standard on all units, with or without hydronic package.
NOTE: 30RAP chillers with Greenspeed intelligence are not available on unit sizes 010, 015, and 070-150.

## ENGLISH (cont)

| UNIT 30RAP | 070 | 080 | 090 | 100 | 115 | 130 | 150 |
|---|---|---|---|---|---|---|---|
| **OPERATING WEIGHT (lb)** | | | | | | | |
| **MCHX Condenser Coil, No Pump** | 3410 | 3641 | 3697 | 4690 | 5008 | 6451 | 6938 |
| **MCHX Condenser Coil, Single Pump (60 Hz only)** | 3812 | 4035 | 4061 | 5089 | 5407 | 6850 | 7337 |
| **MCHX Condenser Coil, Dual Pump (60 Hz only)** | 4092 | 4390 | 4411 | 5374 | 5692 | 7135 | 7622 |
| **Al-Cu Condenser Coil, No Pump** | 3759 | 4064 | 4119 | 5548 | 5939 | 7113 | 7673 |
| **Al-Cu Condenser Coil, Single Pump (60 Hz only)** | 4161 | 4457 | 4483 | 5947 | 6338 | 7512 | 8072 |
| **Al-Cu Condenser Coil, Dual Pump (60 Hz only)** | 4441 | 4737 | 4763 | 6232 | 6623 | 7797 | 8357 |
| **Cu-Cu Condenser Coil, No Pump** | 4359 | 4784 | 4839 | 6388 | 6899 | 8193 | 8873 |
| **Cu-Cu Condenser Coil, Single Pump (60 Hz only)** | 4761 | 5177 | 5203 | 6787 | 7298 | 8592 | 9272 |
| **Cu-Cu Condenser Coil, Dual Pump (60 Hz only)** | 5041 | 5457 | 5483 | 7072 | 7583 | 8877 | 9557 |
| **REFRIGERANT TYPE** | R-410A, EXV Controlled System | | | | | | |
| **Total Refrigerant Charge MCHX (lb)** | 60.5 | 70.2 | 71.0 | 88.3 | 100.9 | 110.4 | 119.5 |
| **Refrigerant Charge MCHX (lb) Ckt A/Ckt B** | 25.5/35 | 35.1/35.1 | 35.5/35.5 | 39.3/49.0 | 50.6/50.3 | 51.2/59.2 | 60.0/59.5 |
| **Total Refrigerant Charge RTPF (lb)** | 150.0 | 169.2 | 170.0 | 192.0 | 213.0 | 239.2 | 264.0 |
| **Refrigerant Charge RTPF (lb) Ckt A/Ckt B** | 65.5/84.5 | 84.6/84.6 | 85.0/85.0 | 87.0/105.0 | 106.5/106.5 | 107.5/131.7 | 132.0/132.0 |
| **COMPRESSORS** | Scroll, Hermetic | | | | | | |
| **Quantity** | 5 | 6 | 6 | 5 | 6 | 6 | 6 |
| **Speed (Rpm)** | 3500 (60 Hz)/ 2900 (50Hz) | | | | | | |
| **(Qty, Tons) Ckt A** | (2) 15 | (3) 13 | (3) 15 | (1) 20 (1) 25 | (3) 20 | (3) 20 | (3) 25 |
| **(Qty, Tons) Ckt B** | (3) 15 | (3) 15 | (3) 15 | (3) 20 | (3) 20 | (3) 25 | (3) 25 |
| **Oil Charge (Pt) Ckt A/Ckt B** | 13.8/20.6 | 20.6/20.6 | 20.6/20.6 | 28.4/42.6 | 42.6/42.6 | 42.6/42.6 | 42.6/42.6 |
| **No. Capacity Steps** | | | | | | | |
| **Standard** | 5 | 6 | 6 | 5 | 6 | 6 | 6 |
| **With Hot Gas Bypass** | 6 | 7 | 7 | 6 | 7 | 7 | 7 |
| **Digital Compressor Option** | 55 | 66 | 66 | — | — | — | — |
| **Minimum Capacity Step (%)** | | | | | | | |
| **Standard** | 20 | 15 | 17 | 19 | 17 | 15 | 17 |
| **With Hot Gas Bypass** | 13 | 9 | 11 | 13 | 11 | 9 | 11 |
| **Digital Compressor Option** | 7 | 5 | 6 | — | — | — | — |
| **Capacity (%)** | | | | | | | |
| **Circuit A** | 40 | 46 | 50 | 43 | 50 | 44 | 50 |
| **Circuit B** | 60 | 54 | 50 | 57 | 50 | 56 | 50 |
| **COOLER** | Brazed, Direct-Expansion Plate Heat Exchanger | | | | | | |
| **Weight (lb) (empty)** | 197 | 228 | 245 | 267 | 304 | 334 | 378 |
| **Net Fluid Volume (gal)** | 4.3 | 5.0 | 6.8 | 7.4 | 8.6 | 9.5 | 10.9 |
| **Maximum Refrigerant Pressure (psig)** | 450 | 450 | 450 | 450 | 450 | 450 | 450 |
| **Maximum Water-Side Pressure Without Pump(s) (psig)** | 300 | 300 | 300 | 300 | 300 | 300 | 300 |
| **Maximum Water-Side Pressure With Pump(s) (psig)** | 150 | 150 | 150 | 150 | 150 | 150 | 150 |
| **CHILLER WATER CONNECTIONS (in.)** | | | | | | | |
| **Inlet and Outlet, Victaulic (IPS Carbon Steel)*** | 3 | 3 | 3 | 4 | 4 | 4 | 4 |
| **Drain (NPT)** | 1/2 | 1/2 | 1/2 | 1/2 | 1/2 | 1/2 | 1/2 |
| **CONDENSER FANS** | | | | | | | |
| **Standard Low-Sound AeroAcoustic™ Type** | Plastic Type, Axial, Vertical Discharge | | | | | | |
| **Fan Speed (Rpm)** | 850 (60 Hz)/710 (50 Hz) | | | | | | |
| **No. Blades...Diameter (in.)** | 9...30 | 9...30 | 9...30 | 9...30 | 9...30 | 9...30 | 9...30 |
| **No. Fans** | 5 | 6 | 6 | 7 | 8 | 9 | 10 |
| **Total Airflow, 60 Hz (Cfm)** | 48,500 | 58,200 | 58,200 | 67,900 | 77,600 | 87,300 | 97,000 |
| **Total Airflow, 50 Hz (Cfm)** | 40,512 | 48,614 | 48,614 | 56,716 | 64,819 | 72,921 | 81,024 |
| **Optional Value Sound Type** | Propeller Type, Axial, Vertical Discharge | | | | | | |
| **Fan Speed (Rpm)** | 1140 (60 Hz)/950 (50 Hz) | | | | | | |
| **No. Blades...Diameter (in.)** | 4...30 | 4...30 | 4...30 | 4...30 | 4...30 | 4...30 | 4...30 |
| **No. Fans** | 5 | 6 | 6 | 7 | 8 | 9 | 10 |
| **Total Airflow, 60 Hz (Cfm)** | 51,250 | 61,500 | 61,500 | 71,750 | 82,000 | 92,250 | 102,500 |
| **Total Airflow, 50 Hz (Cfm)** | 42,809 | 51,371 | 51,371 | 59,932 | 68,494 | 77,056 | 85,618 |
| **CONDENSER COILS** | Novation® MCHX Aluminum Tube, Aluminum Fin or RTPF | | | | | | |
| **Quantity (Ckt A/Ckt B)** | 2/3 | 3/3 | 3/3 | 3/4 | 4/4 | 4/5 | 5/5 |
| **Total Face Area (sq ft)** | 124.7 | 149.6 | 149.6 | 174.5 | 199.4 | 224.4 | 249.3 |
| **Maximum Refrigerant Pressure (psig)** | 656 | 656 | 656 | 656 | 656 | 656 | 656 |
| **HYDRONIC MODULE (Optional, 60 Hz Only)†** | Pump(s), Strainer with Blowdown Valve, Expansion Tank, Pressure Taps, Drain and Vent Plugs, Flow Switch, and Balance Valve | | | | | | |
| **Pump** | Single or Dual, Centrifugal Monocell Pump(s), 3500 Rpm. Dual pumps with check valves and isolation valves. | | | | | | |
| **Expansion Tank Volume (gal) Total/Acceptance** | — | — | — | — | — | — | — |
| **CHASSIS DIMENSIONS (ft - in.)** | | | | | | | |
| **Length** | 12-7 | 12-7 | 12-7 | 15-11 | 15-11 | 19-4 | 19-4 |
| **Width** | 7-4 | 7-4 | 7-4 | 7-4 | 7-4 | 7-4 | 7-4 |
| **Height** | 6-6 | 6-6 | 6-6 | 6-6 | 6-6 | 6-6 | 6-6 |

LEGEND

**EXV** — Electronic Expansion Valve
**MCHX** — Microchannel Heat Exchanger
**RTPF** — Round Tube, Plate Fin (Condenser Coil)

*Unit connection is IPS Carbon Steel piping.
†Flow switch and strainer are standard on all units, with or without hydronic package.
NOTE: 30RAP chillers with Greenspeed intelligence are not available on unit sizes 010, 015, and 070-150.

# Physical data (cont)

**SI**

| UNIT 30RAP | 010 | 011 | 015 | 016 | 018 | 020 | 025 |
|---|---|---|---|---|---|---|---|
| **OPERATING WEIGHT (kg)** | | | | | | | |
| **MCHX Condenser Coil, No Pump** | 319 | 346 | 326 | 363 | 510 | 514 | 564 |
| **MCHX Condenser Coil, Single Pump (60 Hz only)** | 393 | 419 | 399 | 436 | 584 | 588 | 637 |
| **MCHX Condenser Coil, Dual Pump (60 Hz only)** | 467 | 493 | 473 | 510 | 658 | 661 | 711 |
| **Al-Cu Condenser Coil, No Pump** | — | — | — | — | — | — | — |
| **Al-Cu Condenser Coil, Single Pump (60 Hz only)** | — | — | — | — | — | — | — |
| **Al-Cu Condenser Coil, Dual Pump (60 Hz only)** | — | — | — | — | — | — | — |
| **Cu-Cu Condenser Coil, No Pump** | — | — | — | — | — | — | — |
| **Cu-Cu Condenser Coil, Single Pump (60 Hz only)** | — | — | — | — | — | — | — |
| **Cu-Cu Condenser Coil, Dual Pump (60 Hz only)** | — | — | — | — | — | — | — |
| **REFRIGERANT TYPE** | R-410A, EXV Controlled System | | | | | | |
| **Total Refrigerant Charge (kg)** | 3.9 | 3.8 | 4.4 | 4.5 | 6.6 | 7.1 | 7.6 |
| **Refrigerant Charge (kg) Ckt A/Ckt B** | 3.9/— | 3.8/— | 4.4/— | 4.5/— | 6.6/— | 7.1/— | 7.6/— |
| **Total Refrigerant Charge RTPF (kg)** | — | — | — | — | — | — | — |
| **Refrigerant Charge RTPF (kg) Ckt A/Ckt B** | — | — | — | — | — | — | — |
| **COMPRESSORS** | Scroll, Hermetic | | | | | | |
| **Quantity** | 1 | 2 | 1 | 2 | 2 | 2 | 2 |
| **Speed (R/s)** | 58.3 (60 Hz)/48.3 (50 Hz) | | | | | | |
| **(Qty) kW, Ckt A** | (1) 38 | (2) 34.1 | (1) 53 | (2) 47.8 | (2) 32 | (2) 35 | (2) 46 |
| **(Qty) kW, Ckt B** | — | — | — | — | — | — | — |
| **Oil Charge (L) Ckt A/Ckt B** | 3.3/— | 3/— | 3.3/— | 4.3/— | 6.5/— | 6.5/— | 6.5/— |
| **No. Capacity Steps** | | | | | | | |
| **Standard** | 1 | 2 | 1 | 2 | 2 | 2 | 2 |
| **With Hot Gas Bypass** | — | — | — | — | 3 | 3 | 3 |
| **Digital Compressor Option** | 13 | — | 13 | — | 22 | 22 | 22 |
| **Minimum Capacity Step (%)** | | | | | | | |
| **Standard** | 100 | 40 | 100 | 40 | 50 | 50 | 50 |
| **With Hot Gas Bypass** | — | — | — | — | 20 | 24 | 29 |
| **Digital Compressor Option** | 20 | — | 20 | — | 17 | 17 | 17 |
| **Capacity (%)** | | | | | | | |
| **Circuit A** | 100 | 100 | 100 | 100 | 100 | 100 | 100 |
| **Circuit B** | — | — | — | — | — | — | — |
| **COOLER** | Brazed, Direct-Expansion Plate Heat Exchanger | | | | | | |
| **Weight (kg) (empty)** | 10.1 | 10.1 | 12.5 | 14.4 | 14.4 | 18.3 | 21.0 |
| **Net Fluid Volume (L)** | 2.3 | 2.3 | 3.0 | 3 | 3.4 | 4.5 | 5.3 |
| **Maximum Refrigerant Pressure (kPa)** | 3482 | 3482 | 3482 | 3482 | 3482 | 3482 | 3482 |
| **Maximum Water-Side Pressure Without Pump(s) (kPa)** | 2068 | 2068 | 2068 | 2068 | 2068 | 2068 | 2068 |
| **Maximum Water-Side Pressure With Pump(s) (kPa)** | 1034 | 1034 | 1034 | 1034 | 1034 | 1034 | 1034 |
| **CHILLER WATER CONNECTIONS (in.)** | | | | | | | |
| **Inlet and Outlet, Victaulic (IPS Carbon Steel)*** | 2 | 2 | 2 | 2 | 2 | 2 | 2 |
| **Drain (NPT)** | 1/4 | 1/4 | 1/4 | 1/4 | 1/4 | 1/4 | 1/4 |
| **CONDENSER FANS** | | | | | | | |
| **Standard Low-Sound AeroAcoustic™ Type** | Plastic Type, Axial, Vertical Discharge | | | | | | |
| **Fan Speed (R/s)** | 14.2 (60 Hz)/11.8 (50 Hz) | | | | | | |
| **No. Blades...Diameter (mm)** | 9...762 | 9...762 | 9...762 | 9...762 | 9...762 | 9...762 | 9...762 |
| **No. Fans** | 1 | 1 | 1 | 1 | 2 | 2 | 2 |
| **Total Airflow 60 Hz (L/s)** | 4437 | 4437 | 4437 | 4437 | 8260 | 8260 | 9157 |
| **Total Airflow 50 Hz (L/s)** | 3705 | 3705 | 3705 | 3705 | 6897 | 6897 | 7646 |
| **Optional Value Sound Type** | Propeller Type, Axial, Vertical Discharge | | | | | | |
| **Fan Speed (R/s)** | 19.0 (60 Hz)/15.8 (50 Hz) | | | | | | |
| **No. Blades...Diameter (mm)** | 4...762 | 4...762 | 4...762 | 4...762 | 4...762 | 4...762 | 4...762 |
| **No. Fans** | 1 | 1 | 1 | 1 | 2 | 2 | 2 |
| **Total Airflow 60 Hz (L/s)** | 4767 | 4800 | 4767 | 4800 | 8732 | 8732 | 9865 |
| **Total Airflow 50 Hz (L/s)** | 3981 | 3981 | 3981 | 3981 | 7291 | 7291 | 8237 |
| **CONDENSER COILS** | Novation® MCHX Aluminum Tube, Aluminum Fin | | | | | | |
| **Quantity (Ckt A/Ckt B)** | 1/— | 1/— | 1/— | 1/— | 1/— | 1/— | 1/— |
| **Total Face Area (sq m)** | 1.6 | 1.8 | 1.6 | 1.8 | 2.4 | 2.4 | 3.1 |
| **Maximum Refrigerant Pressure (kPa)** | 4523 | 4523 | 4523 | 4523 | 4523 | 4523 | 4523 |
| **HYDRONIC MODULE (Optional, 60 Hz Only)†** | Pump(s), Strainer with Blowdown Valve, Expansion Tank, Pressure Taps, Drain and Vent Plugs, Flow Switch, and Balance Valve | | | | | | |
| **Pump** | Single or Dual, Centrifugal Monocell Pump(s), 3500 Rpm. Dual pumps with check valves and isolation valves. | | | | | | |
| **Expansion Tank Volume (L) Total/Acceptance** | 17.4/12.3 | | | | | | |
| **CHASSIS DIMENSIONS (mm)** | | | | | | | |
| **Length** | 1689 | 1689 | 1689 | 1689 | 2242 | 2242 | 2242 |
| **Width** | 1029 | 1029 | 1029 | 1029 | 1025 | 1025 | 1025 |
| **Height** | 1689 | 1689 | 1689 | 1689 | 1689 | 1689 | 1994 |

LEGEND

**EXV** — Electronic Expansion Valve
**MCHX** — Microchannel Heat Exchanger
**RTPF** — Round Tube, Plate Fin (Condenser Coil)

*Unit connection is IPS Carbon Steel piping.

†Flow switch and strainer are standard on all units, with or without hydronic package.

NOTE: 30RAP chillers with Greenspeed intelligence are not available on unit sizes 010, 015, and 070-150.

## SI (cont)

| UNIT 30RAP | 030 | 035 | 040 | 045 | 050 | 055 | 060 |
|---|---|---|---|---|---|---|---|
| **OPERATING WEIGHT (kg)** | | | | | | | |
| **MCHX Condenser Coil, No Pump** | 582 | 981 | 991 | 1015 | 1026 | 1075 | 1077 |
| **MCHX Condenser Coil, Single Pump (60 Hz only)** | 656 | 1137 | 1147 | 1171 | 1182 | 1231 | 1233 |
| **MCHX Condenser Coil, Dual Pump (60 Hz only)** | 729 | 1293 | 1303 | 1327 | 1338 | 1386 | 1389 |
| **Al-Cu Condenser Coil, No Pump** | — | — | — | — | — | — | — |
| **Al-Cu Condenser Coil, Single Pump (60 Hz only)** | — | — | — | — | — | — | — |
| **Al-Cu Condenser Coil, Dual Pump (60 Hz only)** | — | — | — | — | — | — | — |
| **Cu-Cu Condenser Coil, No Pump** | — | — | — | — | — | — | — |
| **Cu-Cu Condenser Coil, Single Pump (60 Hz only)** | — | — | — | — | — | — | — |
| **Cu-Cu Condenser Coil, Dual Pump (60 Hz only)** | — | — | — | — | — | — | — |
| **REFRIGERANT TYPE** | R-410A, EXV Controlled System | | | | | | |
| **Total Refrigerant Charge (kg)** | 8.9 | 13.4 | 13.6 | 15.6 | 15.7 | 15.6 | 15.7 |
| **Refrigerant Charge (kg) Ckt A/Ckt B** | 8.9/— | 6.8/6.7 | 6.8/6.8 | 7.8/7.8 | 7.8/7.8 | 7.7/7.9 | 7.8/7.9 |
| **Total Refrigerant Charge RTPF (kg)** | — | — | — | — | — | — | — |
| **Refrigerant Charge RTPF (kg) Ckt A/Ckt B** | — | — | — | — | — | — | — |
| **COMPRESSORS** | Scroll, Hermetic | | | | | | |
| **Quantity** | 2 | 4 | 4 | 4 | 4 | 4 | 4 |
| **Speed (R/s)** | 58.3 (60 Hz)/48.3 (50 Hz) | | | | | | |
| **(Qty) kW, Ckt A** | (2) 53 | (2) 35 | (2) 35 | (2) 38 | (2) 46 | (2) 46 | (2) 53 |
| **(Qty) kW, Ckt B** | — | (2) 32 | (2) 38 | (2) 46 | (2) 46 | (2) 53 | (2) 53 |
| **Oil Charge (L) Ckt A/Ckt B** | 6.5/— | 6.5/6.5 | 6.5/6.5 | 6.5/6.5 | 6.5/6.5 | 6.5/6.5 | 6.5/6.5 |
| **No. Capacity Steps** | | | | | | | |
| **Standard** | 2 | 4 | 4 | 4 | 4 | 4 | 4 |
| **With Hot Gas Bypass** | 3 | 5 | 5 | 5 | 5 | 5 | 5 |
| **Digital Compressor Option** | 22 | 44 | 44 | 44 | 44 | 44 | 44 |
| **Minimum Capacity Step (%)** | | | | | | | |
| **Standard** | 50 | 23 | 23 | 24 | 25 | 23 | 25 |
| **With Hot Gas Bypass** | 32 | 9 | 11 | 12 | 14 | 13 | 16 |
| **Digital Compressor Option** | 17 | 9 | 8 | 8 | 8 | 8 | 8 |
| **Capacity (%)** | | | | | | | |
| **Circuit A** | 100 | 54 | 47 | 47 | 50 | 46 | 50 |
| **Circuit B** | — | 46 | 53 | 53 | 50 | 54 | 50 |
| **COOLER** | Brazed, Direct-Expansion Plate Heat Exchanger | | | | | | |
| **Weight (kg) (empty)** | 45 | 45.1 | 53.5 | 56.8 | 62.4 | 72.8 | 72.8 |
| **Net Fluid Volume (L)** | 9.9 | 9.8 | 12.5 | 13.2 | 15.5 | 18.9 | 18.9 |
| **Maximum Refrigerant Pressure (kPa)** | 3896 | 3896 | 3896 | 3896 | 3896 | 3896 | 3896 |
| **Maximum Water-Side Pressure Without Pump(s) (kPa)** | 2068 | 2068 | 2068 | 2068 | 2068 | 2068 | 2068 |
| **Maximum Water-Side Pressure With Pump(s) (kPa)** | 1034 | 1034 | 1034 | 1034 | 1034 | 1034 | 1034 |
| **CHILLER WATER CONNECTIONS (in.)** | | | | | | | |
| **Inlet and Outlet, Victaulic (IPS Carbon Steel)*** | 2 | 2 1/2 | 2 1/2 | 2 1/2 | 2 1/2 | 2 1/2 | 2 1/2 |
| **Drain (NPT)** | 1/4 | 1/4 | 1/4 | 1/4 | 1/4 | 1/2 | 1/2 |
| **CONDENSER FANS** | | | | | | | |
| **Standard Low-Sound AeroAcoustic™ Type** | Plastic Type, Axial, Vertical Discharge | | | | | | |
| **Fan Speed (R/s)** | 14.2 (60 Hz)/11.8 (50 Hz) | | | | | | |
| **No. Blades...Diameter (mm)** | 9...762 | 9...762 | 9...762 | 9...762 | 9...762 | 9...762 | 9...762 |
| **No. Fans** | 2 | 3 | 3 | 3 | 3 | 4 | 4 |
| **Total Airflow 60 Hz (L/s)** | 9157 | 13 971 | 13 971 | 14 396 | 14 396 | 18 314 | 18 314 |
| **Total Airflow 50 Hz (L/s)** | 7646 | 11 666 | 11 666 | 12 021 | 12 021 | 15 292 | 15 292 |
| **Optional Value Sound Type** | Propeller Type, Axial, Vertical Discharge | | | | | | |
| **Fan Speed (R/s)** | 19.0 (60 Hz)/15.8 (50 Hz) | | | | | | |
| **No. Blades...Diameter (mm)** | 4...762 | 4...762 | 4...762 | 4...762 | 4...762 | 4...762 | 4...762 |
| **No. Fans** | 2 | 3 | 3 | 3 | 3 | 4 | 4 |
| **Total Airflow 60 Hz (L/s)** | 9865 | 15 104 | 15 104 | 15 718 | 15 718 | 19 730 | 19 730 |
| **Total Airflow 50 Hz (L/s)** | 8237 | 12 612 | 12 612 | 13 124 | 13 124 | 16 474 | 16 474 |
| **CONDENSER COILS** | Novation® MCHX Aluminum Tube, Aluminum Fin | | | | | | |
| **Quantity (Ckt A/Ckt B)** | 1/— | 1/1 | 1/1 | 1/1 | 1/1 | 1/1 | 1/1 |
| **Total Face Area (sq m)** | 3.1 | 4.9 | 4.9 | 6.1 | 6.1 | 6.1 | 6.1 |
| **Maximum Refrigerant Pressure (kPa)** | 4523 | 4523 | 4523 | 4523 | 4523 | 4523 | 4523 |
| **HYDRONIC MODULE (Optional, 60 Hz Only)†** | Pump(s), Strainer with Blowdown Valve, Expansion Tank, Pressure Taps, Drain and Vent Plugs, Flow Switch, and Balance Valve | | | | | | |
| **Pump** | Single or Dual, Centrifugal Monocell Pump(s), 3500 Rpm. Dual pumps with check valves and isolation valves. | | | | | | |
| **Expansion Tank Volume (L) Total/Acceptance** | 17.4/12.3 | 39.0/39.0 | | | | | |
| **CHASSIS DIMENSIONS (mm)** | | | | | | | |
| **Length** | 2242 | 2248 | 2248 | 2248 | 2248 | 2248 | 2248 |
| **Width** | 1025 | 2350 | 2350 | 2350 | 2350 | 2350 | 2350 |
| **Height** | 1994 | 1689 | 1689 | 1994 | 1994 | 1994 | 1994 |

LEGEND

**EXV** — Electronic Expansion Valve
**MCHX** — Microchannel Heat Exchanger
**RTPF** — Round Tube, Plate Fin (Condenser Coil)

*Unit connection is IPS Carbon Steel piping.

†Flow switch and strainer are standard on all units, with or without hydronic package.

NOTE: 30RAP chillers with Greenspeed intelligence are not available on unit sizes 010, 015, and 070-150.

# Physical data (cont)

## SI (cont)

| UNIT 30RAP | 070 | 080 | 090 | 100 | 115 | 130 | 150 |
|---|---|---|---|---|---|---|---|
| **OPERATING WEIGHT (kg)** | | | | | | | |
| **MCHX Condenser Coil, No Pump** | 1547 | 1652 | 1677 | 2127 | 2272 | 2926 | 3147 |
| **MCHX Condenser Coil, Single Pump (60 Hz only)** | 1729 | 1830 | 1842 | 2308 | 2453 | 3107 | 3328 |
| **MCHX Condenser Coil, Dual Pump (60 Hz only)** | 1856 | 1991 | 2001 | 2438 | 2582 | 3236 | 3457 |
| **Al-Cu Condenser Coil, No Pump** | 1705 | 1843 | 1868 | 2517 | 2694 | 3226 | 3480 |
| **Al-Cu Condenser Coil, Single Pump (60 Hz only)** | 1887 | 2022 | 2033 | 2698 | 2875 | 3407 | 3661 |
| **Al-Cu Condenser Coil, Dual Pump (60 Hz only)** | 2014 | 2149 | 2160 | 2827 | 3004 | 3537 | 3791 |
| **Cu-Cu Condenser Coil, No Pump** | 1977 | 2170 | 2195 | 2898 | 3129 | 3716 | 4025 |
| **Cu-Cu Condenser Coil, Single Pump (60 Hz only)** | 2160 | 2348 | 2360 | 3079 | 3310 | 3897 | 4206 |
| **Cu-Cu Condenser Coil, Dual Pump (60 Hz only)** | 2287 | 2475 | 2487 | 3208 | 3440 | 4027 | 4335 |
| **REFRIGERANT TYPE** | R-410A, EXV Controlled System | | | | | | |
| **Total Refrigerant Charge MCHX (kg)** | 27.5 | 31.8 | 32.2 | 40.1 | 45.8 | 50.1 | 54.2 |
| **Refrigerant Charge MCHX (kg) Ckt A/Ckt B** | 11.6/15.9 | 15.9/15.9 | 16.1/16.1 | 17.8/22.3 | 23.0/22.8 | 23.2/26.9 | 27.2/27.0 |
| **Total Refrigerant Charge RTPF (kg)** | 68.0 | 76.8 | 77.2 | 87.1 | 96.6 | 108.5 | 119.8 |
| **Refrigerant Charge RTPF (kg) Ckt A/Ckt B** | 29.7/38.3 | 38.4/38.4 | 38.6/38.6 | 39.5/47.6 | 48.3/48.3 | 48.8/59.7 | 59.9/59.9 |
| **COMPRESSORS** | Scroll, Hermetic | | | | | | |
| **Quantity** | 5 | 6 | 6 | 5 | 6 | 6 | 6 |
| **Speed (R/s)** | 58.3 (60 Hz)/48.3 (50 Hz) | | | | | | |
| **(Qty, kW) Ckt A** | (2) 53 | (3) 46 | (3) 53 | (1) 70 (1) 87.9 | (3) 70 | (3) 70 | (3) 87.9 |
| **(Qty, kW) Ckt B** | (3) 53 | (3) 53 | (3) 53 | (3) 70 | (3) 70 | (3) 87.9 | (3) 87.9 |
| **Oil Charge (L) Ckt A/Ckt B** | 6.5/9.7 | 9.7/9.7 | 9.7/9.7 | 13.4/20.1 | 20.1/20.1 | 20.1/20.1 | 20.1/20.1 |
| **No. Capacity Steps** | | | | | | | |
| **Standard** | 5 | 6 | 6 | 5 | 6 | 6 | 6 |
| **With Hot Gas Bypass** | 6 | 7 | 7 | 6 | 7 | 7 | 7 |
| **Digital Compressor Option** | 55 | 66 | 66 | — | — | — | — |
| **Minimum Capacity Step (%)** | | | | | | | |
| **Standard** | 20 | 15 | 17 | 19 | 17 | 15 | 17 |
| **With Hot Gas Bypass** | 13 | 9 | 11 | 13 | 11 | 9 | 11 |
| **Digital Compressor Option** | 7 | 5 | 6 | — | — | — | — |
| **Capacity (%)** | | | | | | | |
| **Circuit A** | 40 | 46 | 50 | 43 | 50 | 44 | 50 |
| **Circuit B** | 60 | 54 | 50 | 57 | 50 | 56 | 50 |
| **COOLER** | Brazed, Direct-Expansion Plate Heat Exchanger | | | | | | |
| **Weight (kg) (empty)** | 89.4 | 103.4 | 111.1 | 121.0 | 137.7 | 151.3 | 171.2 |
| **Net Fluid Volume (L)** | 16.3 | 18.9 | 25.7 | 28.0 | 32.5 | 35.9 | 41.2 |
| **Maximum Refrigerant Pressure (kPa)** | 3103 | 3103 | 3103 | 3103 | 3103 | 3103 | 3103 |
| **Maximum Water-Side Pressure Without Pump(s) (kPa)** | 2068 | 2068 | 2068 | 2068 | 2068 | 2068 | 2068 |
| **Maximum Water-Side Pressure With Pump(s) (kPa)** | 1034 | 1034 | 1034 | 1034 | 1034 | 1034 | 1034 |
| **CHILLER WATER CONNECTIONS (in.)** | | | | | | | |
| **Inlet and Outlet, Victaulic (IPS Carbon Steel)*** | 3 | 3 | 3 | 4 | 4 | 4 | 4 |
| **Drain (NPT)** | 1/2 | 1/2 | 1/2 | 1/2 | 1/2 | 1/2 | 1/2 |
| **CONDENSER FANS** | | | | | | | |
| **Standard Low-Sound AeroAcoustic™ Type** | Plastic Type, Axial, Vertical Discharge | | | | | | |
| **Fan Speed (R/s)** | 14.2 (60 Hz)/11.8 (50 Hz) | | | | | | |
| **No. Blades...Diameter (mm)** | 9...762 | 9...762 | 9...762 | 9...762 | 9...762 | 9...762 | 9...762 |
| **No. Fans** | 5 | 6 | 6 | 7 | 8 | 9 | 10 |
| **Total Airflow, 60 Hz (L/s)** | 22 890 | 27 467 | 27 467 | 32 045 | 36 623 | 41 201 | 45 779 |
| **Total Airflow, 50 Hz (L/s)** | 19 120 | 22 943 | 22 943 | 26 767 | 30 591 | 34 415 | 38 239 |
| **Optional Value Sound Type** | Propeller Type, Axial, Vertical Discharge | | | | | | |
| **Fan Speed (R/s)** | 19.0 (60 Hz)/15.8 (50 Hz) | | | | | | |
| **No. Blades...Diameter (mm)** | 4...762 | 4...762 | 4...762 | 4...762 | 4...762 | 4...762 | 4...762 |
| **No. Fans** | 5 | 6 | 6 | 7 | 8 | 9 | 10 |
| **Total Airflow, 60 Hz (L/s)** | 24 187 | 29 025 | 29 025 | 33 862 | 38 700 | 43 537 | 48 375 |
| **Total Airflow, 50 Hz (L/s)** | 20 204 | 24 245 | 24 245 | 28 285 | 32 326 | 36 367 | 40 407 |
| **CONDENSER COILS** | Novation® MCHX Aluminum Tube, Aluminum Fin or RTPF | | | | | | |
| **Quantity (Ckt A/Ckt B)** | 2/3 | 3/3 | 3/3 | 3/4 | 4/4 | 4/5 | 5/5 |
| **Total Face Area (sq m)** | 11.6 | 13.9 | 13.9 | 16.2 | 18.5 | 20.8 | 23.2 |
| **Maximum Refrigerant Pressure (kPa)** | 4523 | 4523 | 4523 | 4523 | 4523 | 4523 | 4523 |
| **HYDRONIC MODULE (Optional, 60 Hz Only)†** | Pump(s), Strainer with Blowdown Valve, Expansion Tank, Pressure Taps, Drain and Vent Plugs, Flow Switch, and Balance Valve | | | | | | |
| **Pump** | Single or Dual, Centrifugal Monocell Pump(s), 3500 Rpm. Dual pumps with check valves and isolation valves. | | | | | | |
| **Expansion Tank Volume (L) Total/Acceptance** | — | — | — | — | — | — | — |
| **CHASSIS DIMENSIONS (mm)** | | | | | | | |
| **Length** | 3826 | 3826 | 3826 | 4864 | 4864 | 5893 | 5893 |
| **Width** | 2241 | 2241 | 2241 | 2241 | 2241 | 2241 | 2241 |
| **Height** | 1976 | 1976 | 1976 | 1976 | 1976 | 1976 | 1976 |

LEGEND

**EXV** — Electronic Expansion Valve
**MCHX** — Microchannel Heat Exchanger
**RTPF** — Round Tube, Plate Fin (Condenser Coil)

*Unit connection is IPS Carbon Steel piping.
†Flow switch and strainer are standard on all units, with or without hydronic package.
NOTE: 30RAP chillers with Greenspeed intelligence are not available on unit sizes 010, 015, and 070-150.

## UNIT WEIGHTS

### MCHX COIL, NO PUMP UNITS

| 30RAP SIZE | POUNDS | | | | | | |
|---|---|---|---|---|---|---|---|
| | A | B | C | D | E | F | Total Weight |
| **010** | 188 | 209 | 161 | 146 | — | — | 704 |
| **011** | 216 | 209 | 161 | 176 | — | — | 762 |
| **015** | 193 | 213 | 163 | 149 | — | — | 718 |
| **016** | 245 | 213 | 163 | 179 | — | — | 800 |
| **018** | 363 | 264 | 209 | 288 | — | — | 1125 |
| **020** | 365 | 266 | 211 | 290 | — | — | 1133 |
| **025** | 393 | 290 | 237 | 321 | — | — | 1242 |
| **030** | 405 | 301 | 246 | 331 | — | — | 1283 |
| **035** | 652 | 730 | 413 | 369 | — | — | 2163 |
| **040** | 704 | 697 | 390 | 394 | — | — | 2185 |
| **045** | 675 | 758 | 425 | 379 | — | — | 2238 |
| **050** | 732 | 724 | 401 | 405 | — | — | 2263 |
| **055** | 744 | 762 | 437 | 427 | — | — | 2369 |
| **060** | 746 | 762 | 438 | 429 | — | — | 2375 |
| **070** | 930 | 984 | 727 | 770 | — | — | 3410 |
| **080** | 936 | 1038 | 791 | 877 | — | — | 3641 |
| **090** | 952 | 1057 | 800 | 888 | — | — | 3697 |
| **100** | 779 | 805 | 963 | 617 | 595 | 931 | 4690 |
| **115** | 796 | 824 | 1027 | 697 | 672 | 991 | 5008 |
| **130** | 1100 | 1179 | 1430 | 680 | 682 | 1380 | 6451 |
| **150** | 1120 | 1205 | 1554 | 779 | 781 | 1499 | 6938 |

| 30RAP SIZE | KILOGRAMS | | | | | | |
|---|---|---|---|---|---|---|---|
| | A | B | C | D | E | F | Total Weight |
| **010** | 86 | 95 | 73 | 66 | — | — | 319 |
| **011** | 98 | 95 | 73 | 80 | — | — | 346 |
| **015** | 88 | 97 | 74 | 67 | — | — | 326 |
| **016** | 111 | 97 | 74 | 81 | — | — | 363 |
| **018** | 165 | 120 | 95 | 131 | — | — | 510 |
| **020** | 166 | 121 | 96 | 132 | — | — | 514 |
| **025** | 178 | 132 | 108 | 146 | — | — | 564 |
| **030** | 184 | 136 | 112 | 150 | — | — | 582 |
| **035** | 296 | 331 | 187 | 167 | — | — | 981 |
| **040** | 319 | 316 | 177 | 179 | — | — | 991 |
| **045** | 306 | 344 | 193 | 172 | — | — | 1015 |
| **050** | 332 | 328 | 182 | 184 | — | — | 1026 |
| **055** | 337 | 346 | 198 | 194 | — | — | 1075 |
| **060** | 338 | 346 | 199 | 195 | — | — | 1077 |
| **070** | 422 | 446 | 330 | 349 | — | — | 1547 |
| **080** | 425 | 471 | 359 | 398 | — | — | 1652 |
| **090** | 432 | 479 | 363 | 403 | — | — | 1677 |
| **100** | 353 | 365 | 437 | 280 | 270 | 422 | 2127 |
| **115** | 361 | 374 | 466 | 316 | 305 | 450 | 2272 |
| **130** | 499 | 535 | 649 | 309 | 309 | 626 | 2926 |
| **150** | 508 | 546 | 705 | 353 | 354 | 680 | 3147 |

### MCHX COIL, SINGLE PUMP UNITS

| 30RAP SIZE | POUNDS | | | | | | |
|---|---|---|---|---|---|---|---|
| | A | B | C | D | E | F | Total Weight |
| **010** | 215 | 264 | 213 | 174 | — | — | 866 |
| **011** | 243 | 264 | 213 | 204 | — | — | 924 |
| **015** | 220 | 268 | 215 | 177 | — | — | 880 |
| **016** | 272 | 268 | 215 | 207 | — | — | 962 |
| **018** | 404 | 306 | 249 | 329 | — | — | 1288 |
| **020** | 406 | 308 | 251 | 331 | — | — | 1296 |
| **025** | 434 | 332 | 277 | 362 | — | — | 1405 |
| **030** | 446 | 342 | 286 | 372 | — | — | 1446 |
| **035** | 677 | 877 | 537 | 415 | — | — | 2507 |
| **040** | 728 | 846 | 513 | 441 | — | — | 2529 |
| **045** | 701 | 906 | 550 | 425 | — | — | 2582 |
| **050** | 756 | 873 | 524 | 453 | — | — | 2606 |
| **055** | 768 | 910 | 561 | 474 | — | — | 2713 |
| **060** | 771 | 910 | 562 | 476 | — | — | 2719 |
| **070** | 1036 | 1032 | 871 | 874 | — | — | 3812 |
| **080** | 1054 | 1070 | 963 | 948 | — | — | 4035 |
| **090** | 1063 | 1082 | 967 | 950 | — | — | 4061 |
| **100** | 1105 | 871 | 886 | 823 | 554 | 850 | 5089 |
| **115** | 1121 | 892 | 948 | 904 | 631 | 912 | 5407 |
| **130** | 1418 | 1252 | 1415 | 817 | 615 | 1333 | 6850 |
| **150** | 1437 | 1280 | 1537 | 916 | 714 | 1453 | 7337 |

| 30RAP SIZE | KILOGRAMS | | | | | | |
|---|---|---|---|---|---|---|---|
| | A | B | C | D | E | F | Total Weight |
| **010** | 98 | 120 | 97 | 79 | — | — | 393 |
| **011** | 110 | 120 | 97 | 93 | — | — | 419 |
| **015** | 100 | 122 | 98 | 80 | — | — | 399 |
| **016** | 123 | 122 | 98 | 94 | — | — | 436 |
| **018** | 183 | 139 | 113 | 149 | — | — | 584 |
| **020** | 184 | 140 | 114 | 150 | — | — | 588 |
| **025** | 197 | 151 | 126 | 164 | — | — | 637 |
| **030** | 202 | 155 | 130 | 169 | — | — | 656 |
| **035** | 307 | 398 | 244 | 188 | — | — | 1137 |
| **040** | 330 | 384 | 233 | 200 | — | — | 1147 |
| **045** | 318 | 411 | 249 | 193 | — | — | 1171 |
| **050** | 343 | 396 | 238 | 206 | — | — | 1182 |
| **055** | 349 | 413 | 254 | 215 | — | — | 1231 |
| **060** | 350 | 413 | 255 | 216 | — | — | 1233 |
| **070** | 470 | 468 | 395 | 396 | — | — | 1729 |
| **080** | 478 | 485 | 437 | 430 | — | — | 1830 |
| **090** | 482 | 491 | 438 | 431 | — | — | 1842 |
| **100** | 501 | 395 | 402 | 373 | 252 | 385 | 2308 |
| **115** | 508 | 405 | 430 | 410 | 286 | 414 | 2453 |
| **130** | 643 | 568 | 642 | 370 | 279 | 605 | 3107 |
| **150** | 652 | 581 | 697 | 415 | 324 | 659 | 3328 |

### MCHX COIL, DUAL PUMP UNITS

| 30RAP SIZE | POUNDS | | | | | | |
|---|---|---|---|---|---|---|---|
| | A | B | C | D | E | F | Total Weight |
| **010** | 242 | 319 | 266 | 202 | — | — | 1029 |
| **011** | 270 | 319 | 266 | 232 | — | — | 1087 |
| **015** | 247 | 323 | 268 | 205 | — | — | 1043 |
| **016** | 299 | 323 | 268 | 235 | — | — | 1125 |
| **018** | 445 | 347 | 288 | 370 | — | — | 1450 |
| **020** | 447 | 349 | 290 | 372 | — | — | 1458 |
| **025** | 475 | 373 | 316 | 403 | — | — | 1567 |
| **030** | 487 | 383 | 325 | 413 | — | — | 1608 |
| **035** | 705 | 1022 | 664 | 459 | — | — | 2850 |
| **040** | 755 | 992 | 639 | 486 | — | — | 2872 |
| **045** | 729 | 1051 | 677 | 469 | — | — | 2925 |
| **050** | 783 | 1019 | 649 | 499 | — | — | 2950 |
| **055** | 796 | 1055 | 687 | 518 | — | — | 3056 |
| **060** | 798 | 1056 | 688 | 520 | — | — | 3062 |
| **070** | 1123 | 1036 | 928 | 1005 | — | — | 4092 |
| **080** | 1159 | 1094 | 1038 | 1099 | — | — | 4390 |
| **090** | 1167 | 1104 | 1041 | 1099 | — | — | 4411 |
| **100** | 1353 | 908 | 820 | 990 | 506 | 797 | 5374 |
| **115** | 1367 | 931 | 881 | 1070 | 583 | 860 | 5692 |
| **130** | 1658 | 1297 | 1404 | 922 | 559 | 1295 | 7135 |
| **150** | 1676 | 1326 | 1526 | 1020 | 659 | 1415 | 7622 |

| 30RAP SIZE | KILOGRAMS | | | | | | |
|---|---|---|---|---|---|---|---|
| | A | B | C | D | E | F | Total Weight |
| **010** | 110 | 145 | 121 | 92 | — | — | 467 |
| **011** | 123 | 145 | 121 | 105 | — | — | 493 |
| **015** | 112 | 147 | 121 | 93 | — | — | 473 |
| **016** | 136 | 147 | 121 | 107 | — | — | 510 |
| **018** | 202 | 157 | 131 | 168 | — | — | 658 |
| **020** | 203 | 158 | 132 | 169 | — | — | 661 |
| **025** | 216 | 169 | 144 | 183 | — | — | 711 |
| **030** | 221 | 174 | 147 | 187 | — | — | 729 |
| **035** | 320 | 463 | 301 | 208 | — | — | 1293 |
| **040** | 343 | 450 | 290 | 221 | — | — | 1303 |
| **045** | 331 | 477 | 307 | 213 | — | — | 1327 |
| **050** | 355 | 462 | 295 | 226 | — | — | 1338 |
| **055** | 361 | 479 | 312 | 235 | — | — | 1386 |
| **060** | 362 | 479 | 312 | 236 | — | — | 1389 |
| **070** | 509 | 470 | 421 | 456 | — | — | 1856 |
| **080** | 526 | 496 | 471 | 499 | — | — | 1991 |
| **090** | 529 | 501 | 472 | 499 | — | — | 2001 |
| **100** | 614 | 412 | 372 | 449 | 229 | 361 | 2438 |
| **115** | 620 | 422 | 400 | 485 | 264 | 360 | 2582 |
| **130** | 752 | 588 | 637 | 418 | 254 | 587 | 3236 |
| **150** | 760 | 601 | 692 | 463 | 299 | 642 | 3457 |

NOTES:
1. Mounting points are shown on page 18.
2. 30RAP chillers with Greenspeed intelligence are not available on unit sizes 010, 015, and 070-150.

## UNIT WEIGHTS (cont)

### RTPF AL/CU COIL, NO PUMP UNITS

| 30RAP SIZE | WEIGHT AT MOUNTING POINTS (POUNDS) | | | | | | |
|---|---|---|---|---|---|---|---|
| | A | B | C | D | E | F | Total Weight |
| 070 | 1017 | 1030 | 862 | 851 | — | — | 3759 |
| 080 | 1062 | 1100 | 968 | 935 | — | — | 4064 |
| 090 | 1035 | 1153 | 1018 | 914 | — | — | 4119 |
| 100 | 887 | 911 | 1179 | 724 | 702 | 1145 | 5548 |
| 115 | 913 | 940 | 1261 | 813 | 789 | 1223 | 5939 |
| 130 | 1183 | 1261 | 1596 | 763 | 765 | 1545 | 7113 |
| 150 | 1213 | 1296 | 1739 | 871 | 873 | 1682 | 7673 |

| 30RAP SIZE | WEIGHT AT MOUNTING POINTS (KILOGRAMS) | | | | | | |
|---|---|---|---|---|---|---|---|
| | A | B | C | D | E | F | Total Weight |
| 070 | 461 | 467 | 391 | 386 | — | — | 1705 |
| 080 | 482 | 499 | 439 | 424 | — | — | 1843 |
| 090 | 469 | 523 | 462 | 414 | — | — | 1868 |
| 100 | 402 | 413 | 535 | 328 | 319 | 519 | 2517 |
| 115 | 414 | 427 | 572 | 369 | 358 | 555 | 2694 |
| 130 | 537 | 572 | 724 | 346 | 347 | 701 | 3226 |
| 150 | 550 | 588 | 789 | 395 | 396 | 763 | 3480 |

### RTPF AL/CU COIL, SINGLE PUMP UNITS

| 30RAP SIZE | WEIGHT AT MOUNTING POINTS (POUNDS) | | | | | | |
|---|---|---|---|---|---|---|---|
| | A | B | C | D | E | F | Total Weight |
| 070 | 1126 | 1140 | 954 | 942 | — | — | 4161 |
| 080 | 1164 | 1206 | 1062 | 1025 | — | — | 4457 |
| 090 | 1126 | 1255 | 1108 | 994 | — | — | 4483 |
| 100 | 1215 | 982 | 1098 | 929 | 664 | 1059 | 5947 |
| 115 | 1240 | 1012 | 1178 | 1019 | 750 | 1140 | 6338 |
| 130 | 1506 | 1337 | 1577 | 901 | 696 | 1495 | 7512 |
| 150 | 1534 | 1373 | 1718 | 1009 | 804 | 1634 | 8072 |

| 30RAP SIZE | WEIGHT AT MOUNTING POINTS (KILOGRAMS) | | | | | | |
|---|---|---|---|---|---|---|---|
| | A | B | C | D | E | F | Total Weight |
| 070 | 511 | 517 | 433 | 427 | — | — | 1887 |
| 080 | 528 | 547 | 482 | 465 | — | — | 2022 |
| 090 | 511 | 569 | 502 | 451 | — | — | 2033 |
| 100 | 551 | 445 | 498 | 421 | 301 | 480 | 2697 |
| 115 | 562 | 459 | 534 | 462 | 340 | 517 | 2875 |
| 130 | 683 | 606 | 715 | 409 | 316 | 678 | 3407 |
| 150 | 696 | 623 | 779 | 458 | 365 | 741 | 3661 |

### RTPF AL/CU COIL, DUAL PUMP UNITS

| 30RAP SIZE | WEIGHT AT MOUNTING POINTS (POUNDS) | | | | | | |
|---|---|---|---|---|---|---|---|
| | A | B | C | D | E | F | Total Weight |
| 070 | 1201 | 1216 | 1018 | 1005 | — | — | 4441 |
| 080 | 1237 | 1282 | 1128 | 1089 | — | — | 4737 |
| 090 | 1197 | 1333 | 1177 | 1057 | — | — | 4763 |
| 100 | 1459 | 1023 | 1034 | 109 | 622 | 1004 | 6232 |
| 115 | 1483 | 1055 | 1113 | 1180 | 708 | 1085 | 6623 |
| 130 | 1744 | 1383 | 1565 | 1005 | 641 | 1458 | 7797 |
| 150 | 1771 | 1421 | 1706 | 1112 | 750 | 1597 | 8357 |

| 30RAP SIZE | WEIGHT AT MOUNTING POINTS (KILOGRAMS) | | | | | | |
|---|---|---|---|---|---|---|---|
| | A | B | C | D | E | F | Total Weight |
| 070 | 545 | 552 | 462 | 456 | — | — | 2014 |
| 080 | 561 | 581 | 512 | 494 | — | — | 2149 |
| 090 | 543 | 605 | 534 | 479 | — | — | 2160 |
| 100 | 662 | 464 | 469 | 495 | 282 | 455 | 2827 |
| 115 | 673 | 478 | 505 | 535 | 321 | 492 | 3004 |
| 130 | 791 | 627 | 710 | 456 | 291 | 661 | 3536 |
| 150 | 803 | 645 | 774 | 504 | 340 | 724 | 3790 |

NOTES:
1. RTPF AL/CU coils are available for unit sizes 070-150 only.
2. Mounting points are shown on page 18.
3. 30RAP chillers with Greenspeed intelligence are not available on unit sizes 010, 015, and 070-150.

## UNIT WEIGHTS (cont)

### RTPF CU/CU COIL, NO PUMP UNITS

| 30RAP SIZE | WEIGHT AT MOUNTING POINTS (POUNDS) | | | | | | |
|---|---|---|---|---|---|---|---|
| | A | B | C | D | E | F | Total Weight |
| 070 | 1179 | 1194 | 999 | 987 | — | — | 4359 |
| 080 | 1250 | 1294 | 1140 | 1100 | — | — | 4784 |
| 090 | 1216 | 1354 | 1196 | 1073 | — | — | 4839 |
| 100 | 992 | 1016 | 1389 | 829 | 808 | 1354 | 6388 |
| 115 | 1033 | 1060 | 1501 | 933 | 909 | 1463 | 6899 |
| 130 | 1319 | 1395 | 1867 | 898 | 900 | 1814 | 8193 |
| 150 | 1363 | 1445 | 2039 | 1021 | 1023 | 1981 | 8873 |

| 30RAP SIZE | WEIGHT AT MOUNTING POINTS (KILOGRAMS) | | | | | | |
|---|---|---|---|---|---|---|---|
| | A | B | C | D | E | F | Total Weight |
| 070 | 535 | 542 | 453 | 448 | — | — | 1977 |
| 080 | 567 | 587 | 517 | 499 | — | — | 2170 |
| 090 | 552 | 614 | 542 | 487 | — | — | 2195 |
| 100 | 450 | 461 | 630 | 376 | 366 | 614 | 2898 |
| 115 | 469 | 481 | 681 | 423 | 412 | 664 | 3129 |
| 130 | 598 | 633 | 847 | 407 | 408 | 823 | 3716 |
| 150 | 618 | 655 | 925 | 463 | 464 | 899 | 4025 |

### RTPF CU/CU COIL, SINGLE PUMP UNITS

| 30RAP SIZE | WEIGHT AT MOUNTING POINTS (POUNDS) | | | | | | |
|---|---|---|---|---|---|---|---|
| | A | B | C | D | E | F | Total Weight |
| 070 | 1288 | 1304 | 1091 | 1078 | — | — | 4761 |
| 080 | 1352 | 1401 | 1233 | 1191 | — | — | 5177 |
| 090 | 1307 | 1456 | 1285 | 1154 | — | — | 5203 |
| 100 | 1317 | 1090 | 1308 | 1030 | 773 | 1268 | 6787 |
| 115 | 1357 | 1135 | 1418 | 1135 | 873 | 1379 | 7298 |
| 130 | 1639 | 1474 | 1846 | 1035 | 832 | 1766 | 8592 |
| 150 | 1682 | 1525 | 2017 | 1158 | 955 | 1935 | 9272 |

| 30RAP SIZE | WEIGHT AT MOUNTING POINTS (KILOGRAMS) | | | | | | |
|---|---|---|---|---|---|---|---|
| | A | B | C | D | E | F | Total Weight |
| 070 | 584 | 591 | 495 | 489 | — | — | 2160 |
| 080 | 613 | 635 | 559 | 540 | — | — | 2348 |
| 090 | 593 | 660 | 583 | 524 | — | — | 2360 |
| 100 | 597 | 494 | 593 | 467 | 351 | 575 | 3078 |
| 115 | 615 | 515 | 643 | 515 | 396 | 626 | 3310 |
| 130 | 743 | 668 | 837 | 469 | 377 | 801 | 3897 |
| 150 | 763 | 692 | 915 | 525 | 433 | 878 | 4206 |

### RTPF CU/CU COIL, DUAL PUMP UNITS

| 30RAP SIZE | WEIGHT AT MOUNTING POINTS (POUNDS) | | | | | | |
|---|---|---|---|---|---|---|---|
| | A | B | C | D | E | F | Total Weight |
| 070 | 1364 | 1381 | 1156 | 1141 | — | — | 5041 |
| 080 | 1425 | 1476 | 1300 | 1255 | — | — | 5457 |
| 090 | 1378 | 1534 | 1355 | 1216 | — | — | 5483 |
| 100 | 1558 | 1134 | 1246 | 1187 | 735 | 1211 | 7072 |
| 115 | 1597 | 1181 | 1356 | 1291 | 836 | 1323 | 7583 |
| 130 | 1875 | 1523 | 1834 | 1137 | 778 | 1730 | 8877 |
| 150 | 1917 | 1575 | 2004 | 1260 | 902 | 1899 | 9557 |

| 30RAP SIZE | WEIGHT AT MOUNTING POINTS (KILOGRAMS) | | | | | | |
|---|---|---|---|---|---|---|---|
| | A | B | C | D | E | F | Total Weight |
| 070 | 618 | 626 | 524 | 518 | — | — | 2287 |
| 080 | 647 | 670 | 590 | 569 | — | — | 2475 |
| 090 | 625 | 696 | 614 | 552 | — | — | 2487 |
| 100 | 707 | 514 | 565 | 539 | 333 | 549 | 3208 |
| 115 | 724 | 536 | 615 | 586 | 379 | 600 | 3440 |
| 130 | 851 | 691 | 832 | 516 | 353 | 785 | 4026 |
| 150 | 870 | 715 | 909 | 571 | 406 | 861 | 4335 |

NOTES:
1. RTPF CU/CU coils are available for unit sizes 070-150 only.
2. Mounting points are shown on page 18.
3. 30RAP chillers with Greenspeed intelligence are not available on unit sizes 010, 015, and 070-150.

## MOUNTING POINTS

### 30RAP010-030 UNITS*

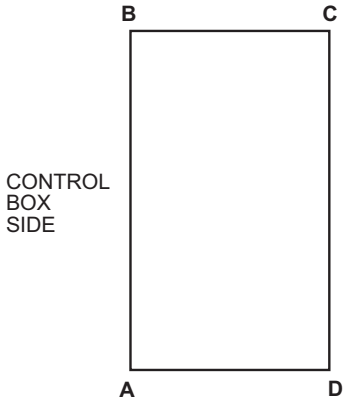


### 30RAP035-090 UNITS*

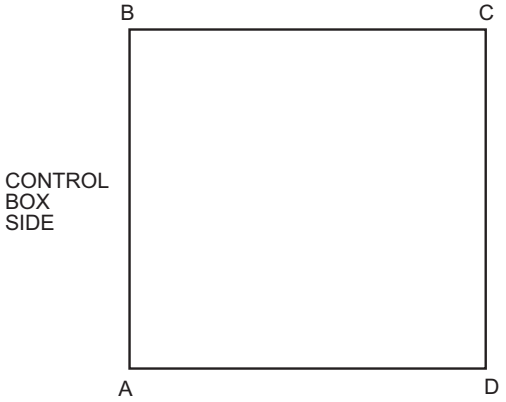


*30RAP chillers with Greenspeed intelligence are not available on unit sizes 010, 015, and 070-150.

NOTE: When the accessory storage tank is employed (sizes 010-060 only), the value for total weight increases (to be added to the weights shown in the mounting weight tables) by 1673 lb (759 kg) on 30RAP010-016, by 2193 lb (995 kg) on 30RAP018-030, and by 4361 lb (1978 kg) on 30RAP035-060. Even with the storage tank, all 30RAP010-060 chillers require only 4-point support.

### 30RAP100-150 UNITS*

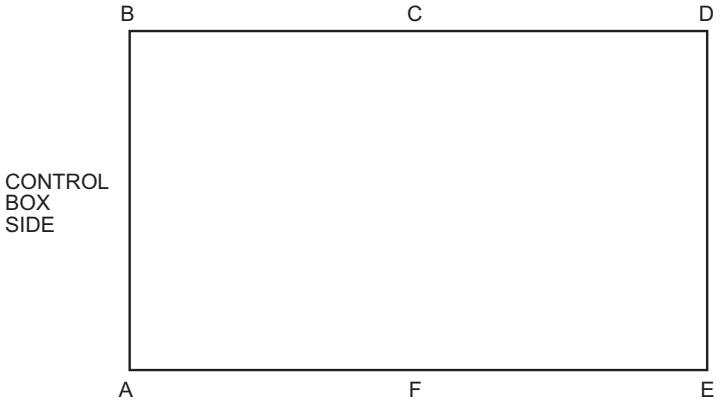

# Options and accessories

| ITEM | FACTORY-INSTALLED OPTION | FIELD-INSTALLED ACCESSORY |
|---|---|---|
| **Condenser Coil and Sound Options** | | |
| MCHX, E-Coated | X | |
| Aluminum Fins/Copper Tube (available on sizes 070-150) | X | |
| Aluminum Fins/Copper Tube, Pre-Coated (available on sizes 070-150) | X | |
| Aluminum Fins/Copper Tube, E-Coat (available on sizes 070-150) | X | |
| Copper Fins/Copper Tube (available on sizes 070-150) | X | |
| Copper Fins/Copper Tube, E-Coat (available on sizes 070-150) | X | |
| Low Sound Compressor Blankets | | X |
| Value Sound Fans | X | |
| Ultra-Low Sound | X | |
| **Controls/Communication Options** | | |
| BACnet Communication | X | |
| BACnet/Modbus Translator Control | | X |
| Chillervisor System Manager III Multi-Unit Control | | X |
| Energy Management Module (EMM) | X | X |
| LON (Local Operating Network) Translator Control | | X |
| Navigator™ Display | | X |
| Remote Enhanced Display | | X |
| Touch Pilot™ Display | | X |
| **Cooler Options** | | |
| Freeze Protection — Cooler Heaters | X | |
| Remote Cooler Kit | | X |
| **Electrical Options** | | |
| Unit-Mounted Main Disconnect, Non-Fused (not available with dual point power or 208/230 volt sizes 100-150) | X | |
| GFI Convenience Outlet (115 v) (60 Hz only) | X | X |
| High SCCR (Short Circuit Current Rating) (not available with dual point power or 208/230 volt sizes 100-150) | X | |
| **Hydronics Option (60 Hz only)** | | |
| Hydronic Pump Package | X | |
| Chilled Water Storage Tank (available on sizes 010-060) | | X |
| Variable Frequency Drive (VFD) Pump (available on sizes 070-150) | X | |
| **Refrigeration Circuit Options** | | |
| High-Efficiency Variable Condenser Fans (not available on unit sizes 010, 015, and 070-150) | X | |
| Compressor Suction Service Valves (available on sizes 070-150) | X | |
| Low Ambient Temperature Head Pressure Control (not available with high-efficiency variable condenser fans) | X | X |
| Hot Gas Bypass (not available as a factory option on sizes 010-016) | X | X |
| Digital Compressor (available on sizes 010, 015, and 018-090) | X | |
| **Security/Packaging Options** | | |
| Security Grilles/Hail Guards | X | X |
| Vibration Isolation | | X |
| Wind Baffles | | X |

LEGEND

**E-Coated** — Epoxy Coating Applied to Entire Coil Assembly
**EMM** — Energy Management Module
**LON** — Local Operating Network
**MCHX** — Microchannel Heat Exchanger

NOTES:
1. Std SCCR (short circuit current rating) (5 kA).
2. High SCCR 460-v, 380-v, 380/415-v, and 208/230-v (65 kA) or 575-v (25 kA).

## Factory-installed options

**Condenser coil** options are available to match coil construction to the site conditions for the best durability. Refer to the Condenser Coil Corrosion Protection Options table on page 21 or the appropriate selection guide for more information. Machine sizes 070-150 have all coil options available, with or without coil coatings. Machine sizes 010-060 are available in MCHX or e-coated MCHX only.

**Value sound fans** provide a metal, propeller-type fan system which is cost-effective when compared to the low-sound AeroAcoustic™ fan system. This factory-installed fan option is compatible with the low ambient head pressure control option.

**Ultra-low sound** provides a combination of low sound AeroAcoustic™ fans with sound blankets.

**Digital compressor control** allows incremental unloading for a closer match to building load. This option is not available on sizes 011, 016, and 100-150, or on any application with a leaving fluid temperature below 35 F (2 C).

**High-efficiency variable condenser fans** control the speed of all fans for improvement in part load efficiency and sound levels. Additionally, high-efficiency variable condenser fans maintain head pressure control down to –20 F (–29 C) ambient temperature with the use of glycol and wind baffles. Varying the speed of all fans on a circuit to a prescribed speed provides accurate head pressure control to the most efficient point while achieving optimum usage of the coils to accomplish excellent part load efficiency. These fans are the key component of the 30RAP chiller

with Greenspeed® intelligence. This option is not available on unit sizes 010, 015, and 070-150.

**High short circuit current rating (SCCR)** provides a short circuit current rating protection for the unit up to 65 kA on 460-v, 380-v, 380/415-v, and 208/230-v units or 25 kA on 575-v units. The high SCCR option is available with either a terminal block or a non-fused disconnect for unit sizes 30RAP010-060 at 460-v or 575-v. Other unit sizes and voltages require the selection of the non-fused disconnect in order to obtain the high SCCR option. The high SCCR option is not available with dual point power at any size or with 208/230-v units in the size range of 30RAP100-150. See the High SCCR Availability chart, on page 21, for further clarification. The standard SCCR rating, regardless of voltage, is 5 kA.

**Low ambient temperature head pressure control** permits the operation of 30RAP018-150 units to –20 F (–29 C outdoor ambient temperature). This option requires field-installed wind baffles, and is also available as a field-installed accessory. This option is not available on unit sizes 010-016 because units in this size range are automatically provided with low-ambient capability. This option is not available on any unit that employs high-efficiency variable condenser fans, because units with such fans already have low-ambient capability.

**Non-fused disconnect** includes factory-installed non-fused disconnect capability for power and control located at the unit. This is not available on dual point power at any size, or on any 208/230-volt chiller in the 100-150 size range.

**Energy management module (EMM)** provides energy management capabilities to minimize chiller energy consumption. Several features are provided with this module including leaving fluid temperature reset, cooling set point reset or demand limit control from a 4 to 20 mA signal, 2-point demand limit control (from 0 to 100%) activated by a remote contact closure, and discrete input for "Ice Done" indication for ice storage system interface. The EMM is also available as an accessory.

**Freeze protection** with cooler heaters provides protection from cooler freeze-up to –20 F (–29 C) on 60 Hz units and down to –15 F (–26 C) on 50 Hz units.

**GFI convenience outlet** is a factory-installed convenience outlet that includes 4-amp GFI (ground fault interrupter) receptacle with independent fuse protection. Convenience outlet is 115-v female receptacle, and is only available for 60 Hz applications. This option is also available as an accessory.

**Compressor suction service valve** provides additional isolation of the compressor from the cooler vessel for service. This option is only available on sizes 070-150.

**Hydronic pump package (60 Hz only)** option adds circulating pumps, complete with controls, contactor, VFD compatible motors, and insulated expansion tank (expansion tank available on sizes 010-060 only). Available in single or dual (lead/lag controlled) cooler pump versions, with total dynamic head external to the chiller from approximately 15 to 160 ft (4.6 to 48.8 m). A VFD option is available on sizes 070-150.

**Hot gas bypass** option allows additional capacity reduction for unit operation down below the minimum standard step of capacity. This option is not available on units with the digital compressor option, on sizes 010-016 units, or on any application with a leaving fluid temperature below 35 F (2 C). This option is also available as an accessory on all 30RAP units without digital compressors.

**Security grilles/hail guards** consist of louvered, sheet metal panels which securely fasten to the chiller and provide condenser coil protection against hail and physical damage. This option directly covers the coil(s) on sizes 010-060. On sizes 070 and larger, the louvered panels are only on the ends of the chiller, with a wire guard entirely covering the sides of the chiller. This option is also available as an accessory.

**BACnet communication option —** Provides pre-programmed factory-installed communication capability with a BACnet MS/TP network. Allows integration with i-Vu® Open control system or a third-party BACnet building automation system. No field programming is required.

## Field-installed accessories

**BACnet/Modbus* translator control** provides an interface between the unit and a BACnet Local Area Network (LAN, i.e., MS/TP EIA-485). Field programming is required.

**Chillervisor System Manager III multi-unit control** accessory allows sequencing of between two and eight chillers in parallel. Pump control is also provided.

**Energy management module** provides energy management capabilities to minimize chiller energy consumption. Several features are provided with this module including leaving fluid temperature reset, cooling set point reset or demand limit control from a 4 to 20 mA signal, 2-point demand limit control (from 0 to 100%) activated by a remote contact closure, and discrete input for "Ice Done" indication for ice storage system interface. The EMM is also available as a factory-installed option.

**LON (local operating network) translator control** provides an interface between the unit and a local operating network (i.e., LonWorks† FT-10A ANSI/EIA-709.1). Field programming is required.

**Navigator™ display module** provides a portable, hand held display module for convenient access to unit status, operation, configuration and troubleshooting diagnostics capability. The 4-line, 80-character LCD (liquid crystal display) display provides clear language information in English, French, Spanish or Portuguese. The weatherproof enclosure and industrial grade extension cord make the Navigator module ideally suited for outdoor applications. Magnets located on the back of the module allow attachment of any sheet metal component for hands-free operation.

**Remote enhanced display** accessory kit contains a remotely mounted 40-character per line, 16-line display panel for unit diagnostics.

**Touch Pilot™ display** is a cost-effective, touch-screen, remote-mount device that can be used in lieu of the remote enhanced display.

**Low ambient temperature head pressure control** permits the operation of 30RAP018-150 units to –20 F ( – 29 C) outdoor ambient temperature. This accessory requires field-installed wind baffles, and is also available as a factory-installed option. This accessory is not available on sizes 010-016 because units in this size range are automatically provided with low-ambient capability. This accessory

*Registered trademark of Schneider Electric.
†Registered trademark of Echelon Corporation.

is not available on any unit that employs high-efficiency variable condenser fans, because units with such fans already have low-ambient capability.

**Chilled water storage tank** provides a minimum of 4 gallons per ton loop storage capacity. Includes insulated steel shell tank, Victaulic pipe connections, electric tank heaters (with thermostat to prevent overheating), electric cables, vent, drain, and enclosure to allow tank to be installed under the chiller to protect to –20 F (–29 C). The power supply for the storage tank is obtained from the chiller, so no separate power source is required for this accessory. This is available with sizes 010-060 only.

**Vibration isolation** consists of field-installed 1/4-in. (0.64 cm) neoprene isolator pads (24-in. x 3-in.) (61.0 cm x 7.6 cm) that reduce vibration transmission from the compressor through the floor and into the conditioned space.

**Low sound compressor blankets** reduce unit sound levels by providing an acoustic blanket on each compressor.

**Hot gas bypass** accessory allows additional capacity reduction for unit operation below the minimum standard step of capacity. This accessory is not available on units that have the digital compressor option or any application with a leaving fluid temperature below 35 F (2 C). This field-installed accessory is also available as a factory-installed option, but the factory option is not available with digital compressors or unit sizes 010-016.

**Remote cooler kit** provides the additional hardware required to remotely mount the cooler from the unit. There are limits to total separation of the unit to the cooler as well as vertical separation limits, and these are delineated in the accessory installation instructions. Never bury refrigerant piping on these or any other applications.

**GFI convenience outlet** is a field-installed convenience outlet that includes a 4-amp GFI (ground fault interrupter) receptacle with independent fuse protection. The convenience outlet is a 115-v female receptacle, and is only available for 60 Hz applications. The GFI convenience outlet is also available as a factory-installed option.

**Security grilles/hail guards** consist of louvered, sheet metal panels which securely fasten to the chiller and provide condenser coil protection against hail and physical damage. This accessory directly covers the coil(s) on sizes 010-060. On sizes 070 and larger, the louvered panels are only on the ends of the chiller, with a wire guard entirely covering the sides of the chiller. Security grilles/hail guards are also available as a factory-installed option.

**Wind baffles** facilitate operation down to –20 F (–29 C) when used in conjunction with either low ambient temperature head pressure control or high-efficiency variable condenser fans.

## CONDENSER COIL CORROSION PROTECTION OPTIONS

| *ENVIRO-SHIELD*™ OPTION* | ENVIRONMENT | | | | |
|---|---|---|---|---|---|
| | Standard | Mild Coastal | Severe Coastal | Industrial | Combined Industrial/Coastal |
| Novation® Heat Exchanger (Standard) | See NACO Packaged Chiller Builder | | | | |
| Novation Heat Exchanger, E-coat | See NACO Packaged Chiller Builder | | | | |
| AL Fins† | X | | | | |
| CU Fins† | | X | | | |
| AL Fins, E-coat† | | | X | X | X |
| CU Fins, E-coat† | | | X | | |
| AL Fins, Pre-coated† | | X | | | |

LEGEND
**AL** — Aluminum
**CU** — Copper
**NACO** — North American Commercial Operations

* See NACO Packaged Chiller Builder for details. Additional corrosion protection is available. For Novation or round tube/plate fin (RTPF) heat exchangers, see selection guide "Environmental Corrosion Protection" (Publication 04-581061-01).
† Available on 30RAP070-150 only.

## HIGH SCCR AVAILABILITY*

| UNIT VOLTAGE | 30RAP UNIT SIZE | | | | | |
|---|---|---|---|---|---|---|
| | 010 - 060 | | 070 - 090 | | 100 - 150 | |
| | NON-FUSED DISCONNECT | TERMINAL BLOCK | NON-FUSED DISCONNECT | TERMINAL BLOCK | NON-FUSED DISCONNECT | TERMINAL BLOCK |
| 208/230-3-60 | X | — | X | — | N/A | N/A |
| 380-3-60 | X | — | X | — | X | — |
| 380/415-3-50 | X | — | X | — | X | — |
| 460-3-60 | X | X | X | — | X | — |
| 575-3-60 | X | X | X | — | X | — |

LEGEND
**—** — High SCCR not available for terminal block
**N/A** — High SCCR not offered for 30RAP100-150 208/230-3-60 units

* The high SCCR option is not available with dual point power.

# Base unit dimensions — 30RAP010, 015

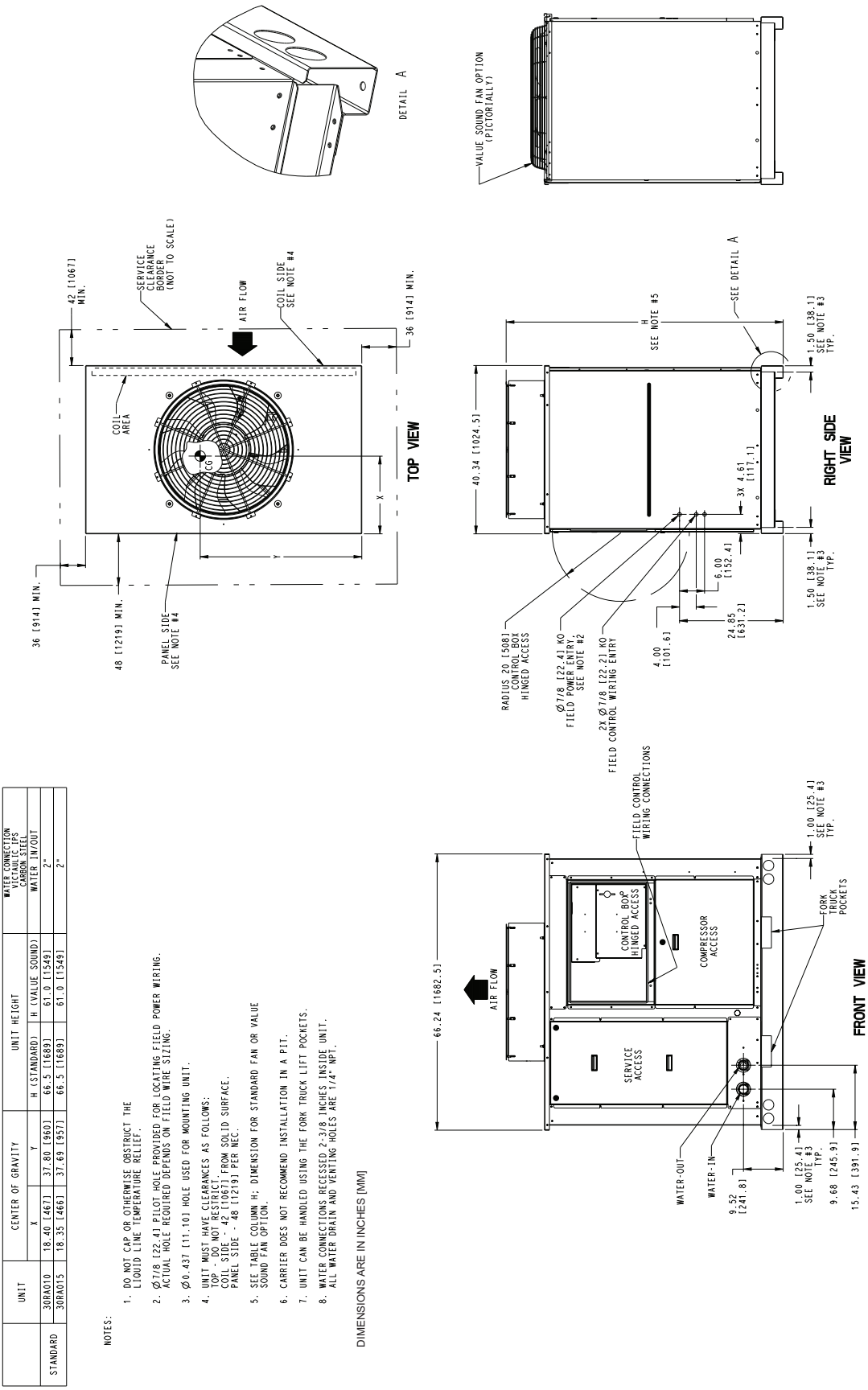


| | UNIT | CENTER OF GRAVITY | | UNIT HEIGHT | | WATER CONNECTION VICTAULIC, IPS (CARBON STEEL) |
|---|---|---|---|---|---|---|
| | | X | Y | H (STANDARD) | H (VALUE SOUND) | WATER IN/OUT |
| STANDARD | 30RAO10 | 18.40 [467] | 37.80 [960] | 66.5 [1689] | 61.0 [1549] | 2" |
| | 30RAO15 | 18.35 [466] | 37.69 [957] | 66.5 [1689] | 61.0 [1549] | 2" |

NOTES:

1. DO NOT CAP OR OTHERWISE OBSTRUCT THE LIQUID LINE TEMPERATURE RELIEF.
2. Ø7/8 [22.4] PILOT HOLE PROVIDED FOR LOCATING FIELD POWER WIRING. ACTUAL HOLE REQUIRED DEPENDS ON FIELD WIRE SIZING.
3. Ø0.437 [11.10] HOLE USED FOR MOUNTING UNIT.
4. UNIT MUST HAVE CLEARANCES AS FOLLOWS:
   TOP - NOT RESTRICTED
   COIL SIDE - 42 [1067] FROM SOLID SURFACE.
   PANEL SIDE - 48 [1219] PER NEC.
5. SEE TABLE COLUMN H; DIMENSION FOR STANDARD FAN OR VALUE SOUND FAN OPTION.
6. CARRIER DOES NOT RECOMMEND INSTALLATION IN A PIT.
7. UNIT CAN BE HANDLED USING THE FORK TRUCK LIFT POCKETS.
8. WATER CONNECTIONS RECESSED 2-3/8 INCHES INSIDE UNIT. ALL WATER DRAIN AND VENTING HOLES ARE 1/4" NPT.

DIMENSIONS ARE IN INCHES [MM]

# Base unit dimensions — 30RAP011, 016

| | UNIT | CENTER OF GRAVITY | | UNIT HEIGHT | | WATER CONNECTION VICTAULIC IPS CARBON STEEL |
|---|---|---|---|---|---|---|
| | | X | Y | H (STANDARD) | H (VALUE SOUND) | WATER IN/OUT |
| STANDARD | 30RA011 | 18.40 [467] | 37.80 [960] | 66.5 [1689] | 61.0 [1549] | 2" |
| | 30RA016 | 18.35 [466] | 37.69 [957] | 66.5 [1689] | 61.0 [1549] | 2" |

NOTES:

1. DO NOT CAP OR OTHERWISE OBSTRUCT THE LIQUID LINE TEMPERATURE RELIEF.
2. Ø7/8 [22.4] PILOT HOLE PROVIDED FOR LOCATING FIELD POWER WIRING. ACTUAL HOLE REQUIRED DEPENDS ON FIELD WIRE SIZING.
3. Ø0.437 [11.10] HOLE USED FOR MOUNTING UNIT.
4. UNIT MUST HAVE CLEARANCES AS FOLLOWS:
   TOP - DO NOT RESTRICT.
   COIL SIDE - 42 [1067] FROM SOLID SURFACE.
   PANEL SIDE - 48 [1219] PER NEC.
5. SEE TABLE COLUMN H; DIMENSION FOR STANDARD FAN OR VALUE SOUND FAN OPTION.
6. CARRIER DOES NOT RECOMMEND INSTALLATION IN A PIT.
7. UNIT CAN BE HANDLED USING THE FORK TRUCK LIFT POCKETS.
8. WATER CONNECTIONS RECESSED 2-3/8 INCHES INSIDE UNIT. ALL WATER DRAIN AND VENTING HOLES ARE 1/4" NPT.

DIMENSIONS ARE IN INCHES [MM]

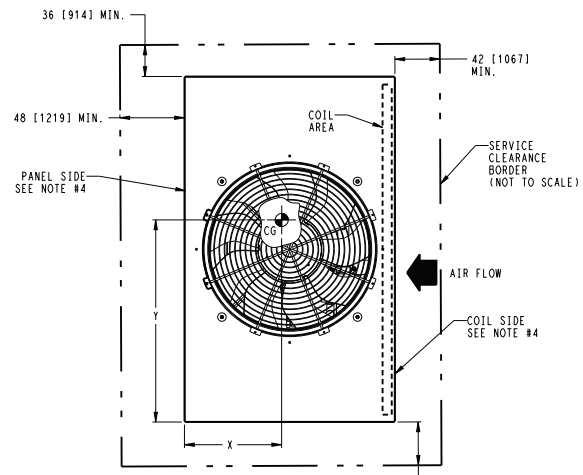


TOP VIEW

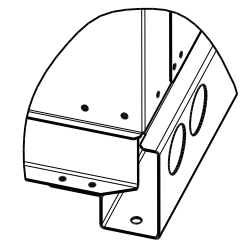

DETAIL A

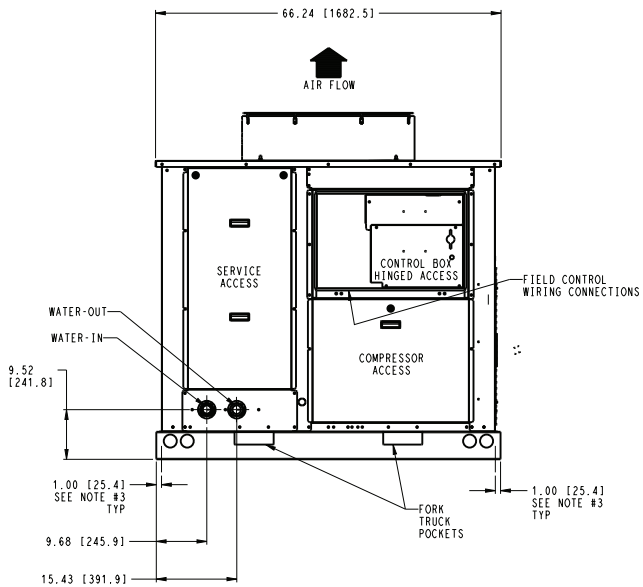


FRONT VIEW

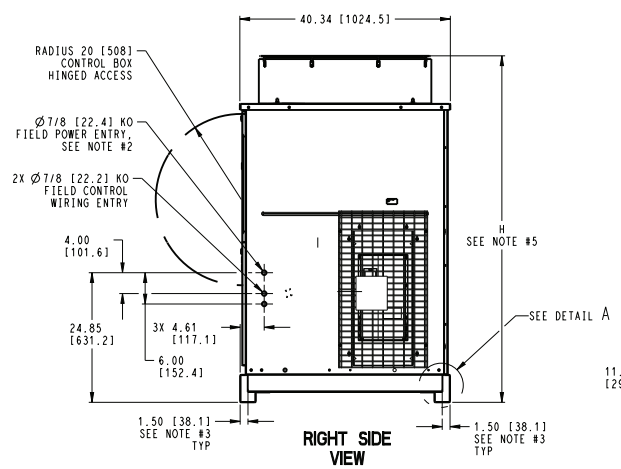


RIGHT SIDE VIEW

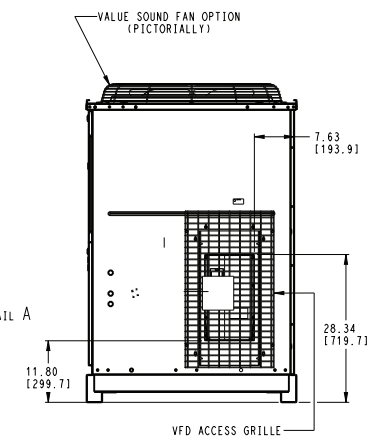

# Base unit dimensions — 30RAP018-030

## 30RAP018-030 WITH FIXED SPEED FANS

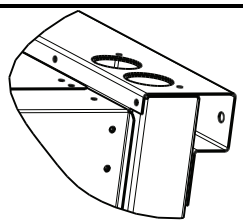


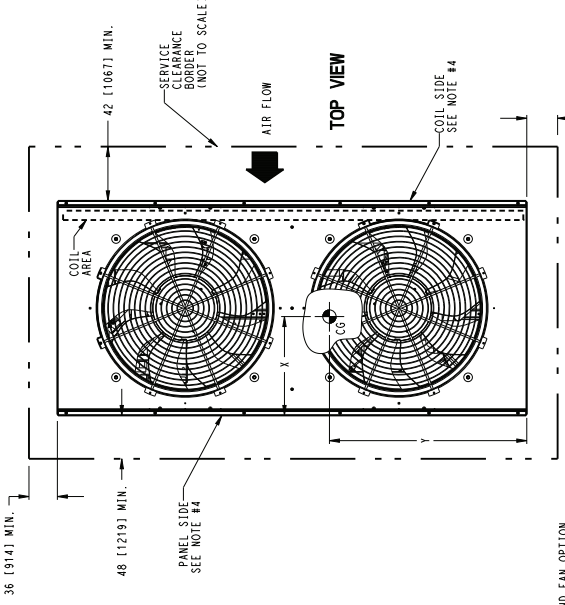


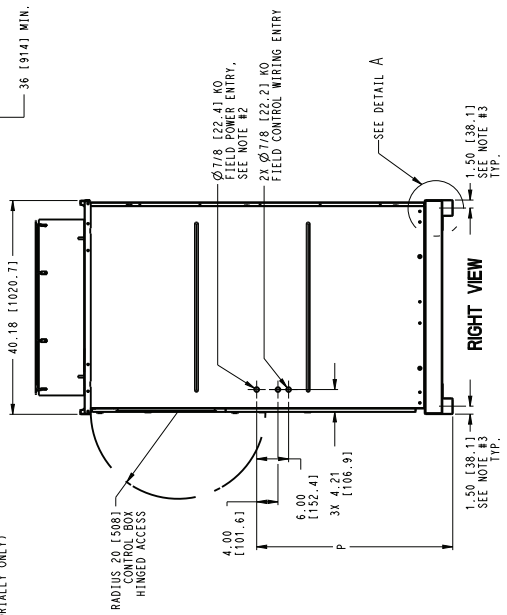


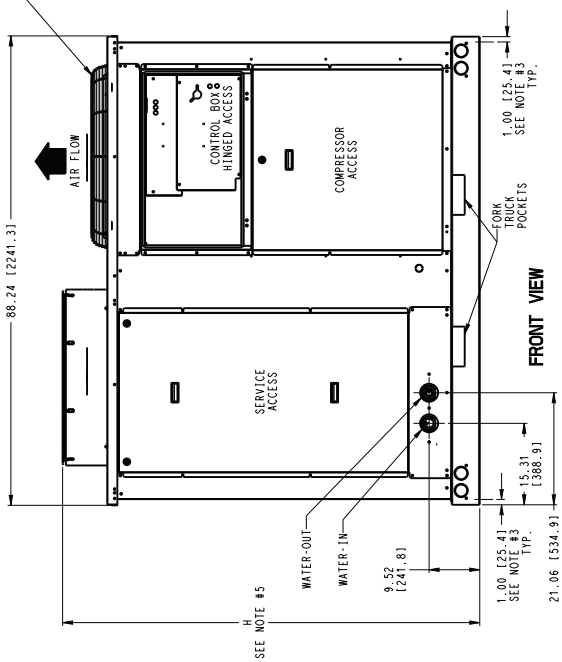


| UNIT | CENTER OF GRAVITY | | UNIT HEIGHT | | POWER ENTRY | WATER CONNECTION VICTAULIC IPS CARBON STEEL |
|---|---|---|---|---|---|---|
| | X | Y | H (STANDARD) | H (VALUE SOUND) | P | WATER IN/OUT |
| 30RA018 | 18.37 [467] | 38.77 [985] | 66.5 [1689] | 61.0 [1549] | 24.9 [631] | 2" |
| 30RA020 | 18.38 [467] | 38.79 [985] | 66.5 [1689] | 61.0 [1549] | 24.9 [631] | 2" |
| 30RA025 | 18.58 [472] | 38.93 [989] | 78.5 [1994] | 73.0 [1854] | 36.9 [936] | 2" |
| 30RA030 | 18.59 [472] | 38.98 [990] | 78.5 [1994] | 73.0 [1854] | 36.9 [936] | 2" |

NOTES:

1. DO NOT CAP OR OTHERWISE OBSTRUCT THE LIQUID LINE TEMPERATURE RELIEF.
2. Ø7/8 [22.4] PILOT HOLE PROVIDED FOR LOCATING FIELD POWER WIRING. ACTUAL HOLE REQUIRED DEPENDS ON FIELD WIRE SIZING.
3. Ø0.437 [11.10] HOLE USED FOR MOUNTING UNIT.
4. UNIT MUST HAVE CLEARANCES AS FOLLOWS:
   TOP - DO NOT RESTRICT.
   COIL SIDE - 42 [1067] FROM SOLID SURFACE.
   PANEL SIDE - 48 [1219] PER NEC.
5. SEE TABLE COLUMN H; DIMENSION FOR STANDARD FAN OR VALUE SOUND FAN OPTION.
6. CARRIER DOES NOT RECOMMEND INSTALLATION IN A PIT.
7. UNIT CAN BE HANDLED USING THE FORK TRUCK LIFT POCKETS.
8. WATER CONNECTIONS RECESSED 2 INCHES INSIDE UNIT. ALL WATER DRAIN AND VENTING HOLES ARE 1/4" NPT.

DIMENSIONS ARE IN INCHES [MM]

# 30RAP018-030 WITH GREENSPEED INTELLIGENCE

| UNIT | CENTER OF GRAVITY | | UNIT HEIGHT | | POWER ENTRY | WATER CONNECTION VICTAULIC IPS CARBON STEEL |
|---|---|---|---|---|---|---|
| | X | Y | H (STANDARD) | H (VALUE SOUND) | P | WATER IN/OUT |
| 30RA018 | 18.37 [467] | 38.77 [985] | 66.5 [1689] | 61.0 [1549] | 24.9 [631] | 2" |
| 30RA020 | 18.38 [467] | 38.79 [985] | 66.5 [1689] | 61.0 [1549] | 24.9 [631] | 2" |
| 30RA025 | 18.58 [472] | 38.93 [989] | 78.5 [1994] | 73.0 [1854] | 36.9 [936] | 2" |
| 30RA030 | 18.59 [472] | 38.98 [990] | 78.5 [1994] | 73.0 [1854] | 36.9 [936] | 2" |

NOTES:

1. DO NOT CAP OR OTHERWISE OBSTRUCT THE LIQUID LINE TEMPERATURE RELIEF.
2. Ø7/8 [22.4] PILOT HOLE PROVIDED FOR LOCATING FIELD POWER WIRING. ACTUAL HOLE REQUIRED DEPENDS ON FIELD WIRE SIZING.
3. Ø0.437 [11.10] HOLE USED FOR MOUNTING UNIT.
4. UNIT MUST HAVE CLEARANCES AS FOLLOWS:
   TOP - DO NOT RESTRICT.
   COIL SIDE - 42 [1067] FROM SOLID SURFACE.
   PANEL SIDE - 48 [1219] PER NEC.
5. SEE TABLE COLUMN H; DIMENSION FOR STANDARD FAN OR VALUE SOUND FAN OPTION.
6. CARRIER DOES NOT RECOMMEND INSTALLATION IN A PIT.
7. UNIT CAN BE HANDLED USING THE FORK TRUCK LIFT POCKETS.
8. WATER CONNECTIONS RECESSED 2 INCHES INSIDE UNIT. ALL WATER DRAIN AND VENTING HOLES ARE 1/4" NPT.

DIMENSIONS ARE IN INCHES [MM]

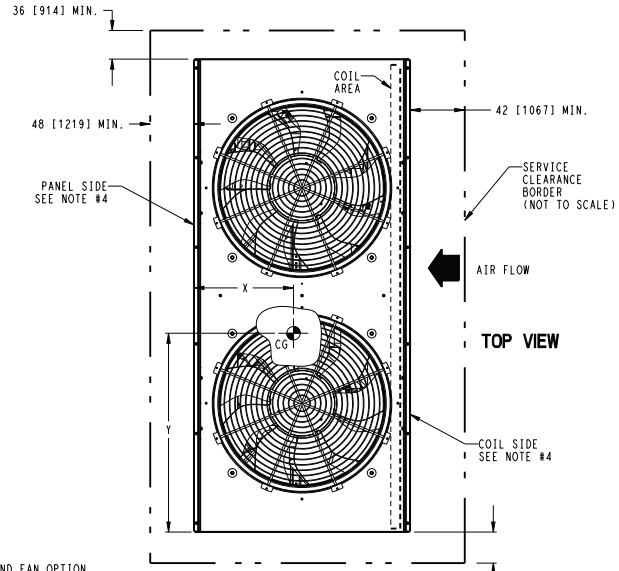


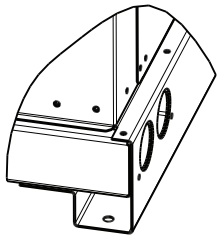

DETAIL A

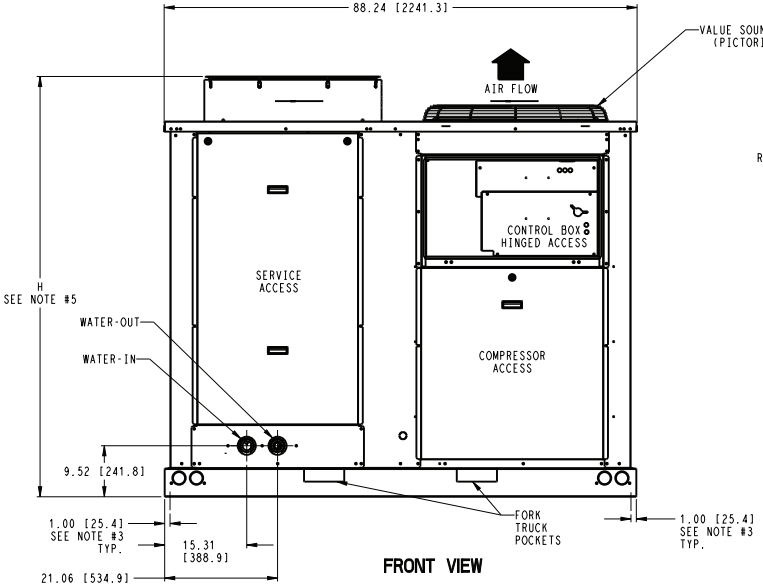


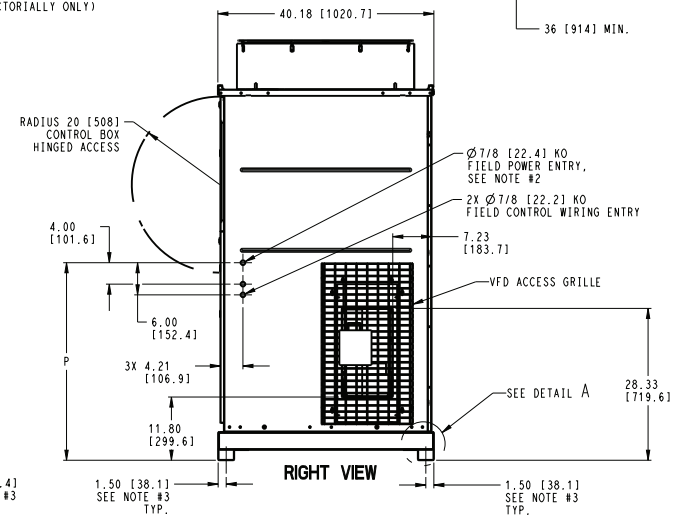

# Base unit dimensions — 30RAP035-060

## 30RAP035-060 WITH FIXED SPEED FANS

| UNIT | CENTER OF GRAVITY X | CENTER OF GRAVITY Y | UNIT HEIGHT H (STANDARD) | UNIT HEIGHT H (VALUE SOUND) | WATER CONNECTION VICTAULIC IPS CARBON STEEL WATER IN/OUT |
|---|---|---|---|---|---|
| 30RA035 | 36.45 [926] | 46.08 [1170] | 66.5 [1689] | 61.0 [1549] | 2-1/2" |
| 30RA040 | 36.24 [921] | 44.03 [1118] | 66.5 [1689] | 61.0 [1549] | 2-1/2" |
| 30RA045 | 36.24 [921] | 46.15 [1172] | 78.5 [1994] | 73.0 [1854] | 2-1/2" |
| 30RA050 | 36.00 [914] | 44.00 [1118] | 78.5 [1994] | 73.0 [1854] | 2-1/2" |
| 30RA055 | 36.48 [927] | 44.60 [1133] | 78.5 [1994] | 73.0 [1854] | 2-1/2" |
| 30RA060 | 36.50 [927] | 44.56 [1132] | 78.5 [1994] | 73.0 [1854] | 2-1/2" |

NOTES:

1. DO NOT CAP OR OTHERWISE OBSTRUCT THE LIQUID LINE TEMPERATURE RELIEF.
2. Ø7/8 [22.4] PILOT HOLE PROVIDED FOR LOCATING FIELD POWER WIRING. ACTUAL HOLE REQUIRED DEPENDS ON FIELD WIRE SIZING.
3. Ø0.437 [11.10] HOLE USED FOR MOUNTING UNIT.
4. UNIT MUST HAVE CLEARANCES AS FOLLOWS:
   TOP - DO NOT RESTRICT.
   COIL SIDE - 42 [1067] FROM SOLID SURFACE.
   PANEL SIDE - 48 [1219] PER NEC.
5. SEE TABLE COLUMN H; DIMENSION FOR STANDARD FAN OR VALUE SOUND FAN OPTION.
6. CARRIER DOES NOT RECOMMEND INSTALLATION IN A PIT.
7. UNIT CAN BE HANDLED USING THE FORK TRUCK LIFT POCKETS (MINIMUM OF 60" FORK LENGTH).
8. WATER CONNECTIONS RECESSED 2-5/8 INCHES INSIDE UNIT. ALL WATER DRAIN AND VENTING HOLES ARE 1/4" NPT.

DIMENSIONS ARE IN INCHES [MM]

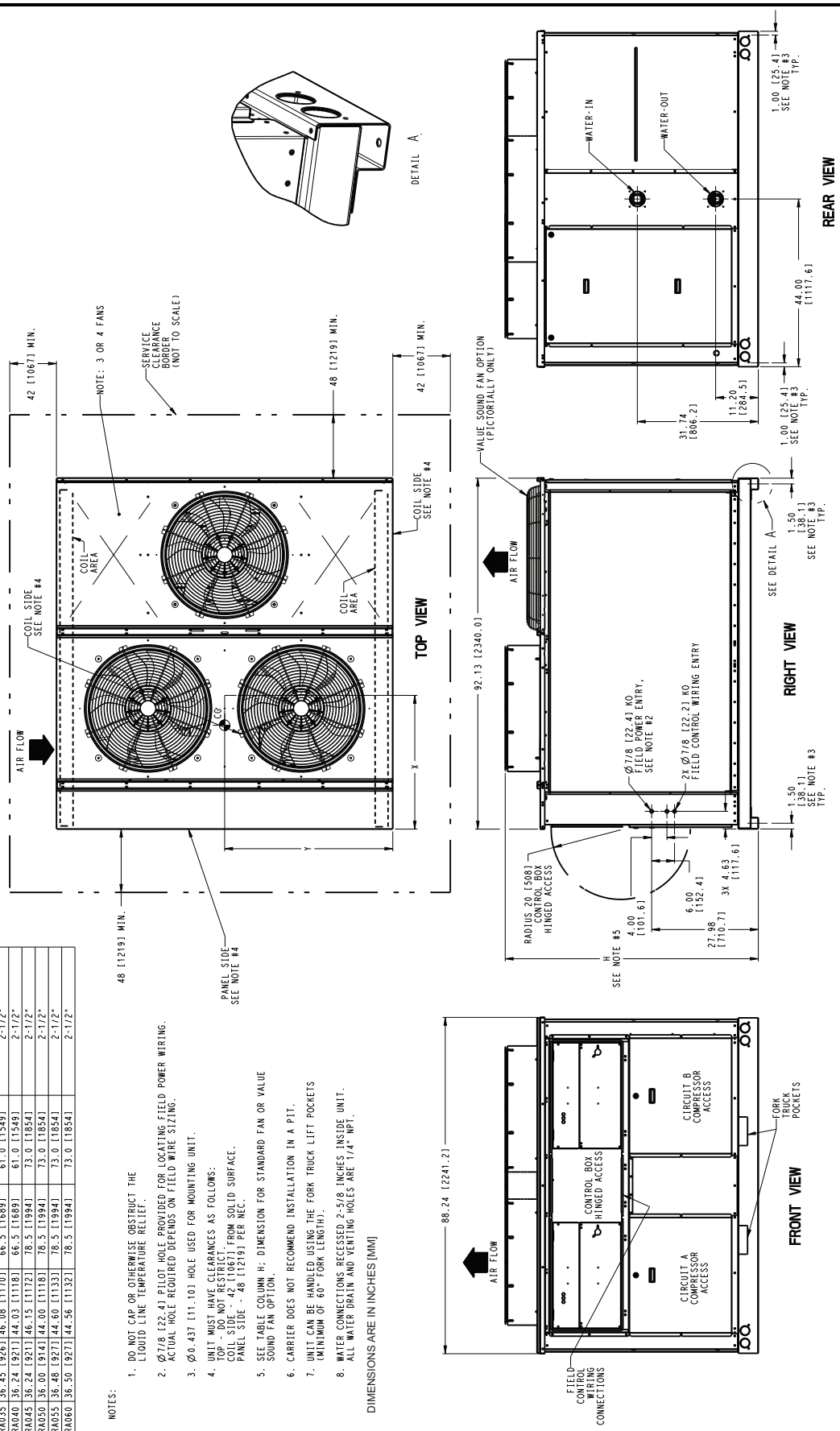

# 30RAP035-060 WITH GREENSPEED INTELLIGENCE

| UNIT | CENTER OF GRAVITY | | UNIT HEIGHT | | WATER CONNECTION VICTAULIC IPS CARBON STEEL |
|---|---|---|---|---|---|
| | X | Y | H (STANDARD) | H (VALUE SOUND) | WATER IN/OUT |
| 30RA035 | 36.45 [926] | 46.08 [1170] | 66.5 [1689] | 61.0 [1549] | 2-1/2" |
| 30RA040 | 36.24 [921] | 44.03 [1118] | 66.5 [1689] | 61.0 [1549] | 2-1/2" |
| 30RA045 | 36.24 [921] | 46.15 [1172] | 78.5 [1994] | 73.0 [1854] | 2-1/2" |
| 30RA050 | 36.00 [914] | 44.00 [1118] | 78.5 [1994] | 73.0 [1854] | 2-1/2" |
| 30RA055 | 36.48 [927] | 44.60 [1133] | 78.5 [1994] | 73.0 [1854] | 2-1/2" |
| 30RA060 | 36.50 [927] | 44.56 [1132] | 78.5 [1994] | 73.0 [1854] | 2-1/2" |

NOTES:

1. DO NOT CAP OR OTHERWISE OBSTRUCT THE LIQUID LINE TEMPERATURE RELIEF.
2. Ø7/8 [22.4] PILOT HOLE PROVIDED FOR LOCATING FIELD POWER WIRING. ACTUAL HOLE REQUIRED DEPENDS ON FIELD WIRE SIZING.
3. Ø0.437 [11.10] HOLE USED FOR MOUNTING UNIT.
4. UNIT MUST HAVE CLEARANCES AS FOLLOWS:
   TOP - DO NOT RESTRICT.
   COIL SIDE - 42 [1067] FROM SOLID SURFACE.
   PANEL SIDE - 48 [1219] PER NEC.
5. SEE TABLE COLUMN H; DIMENSION FOR STANDARD FAN OR VALUE SOUND FAN OPTION.
6. CARRIER DOES NOT RECOMMEND INSTALLATION IN A PIT.
7. UNIT CAN BE HANDLED USING THE FORK TRUCK LIFT POCKETS (MINIMUM OF 60" FORK LENGTH).
8. WATER CONNECTIONS RECESSED 2-5/8 INCHES INSIDE UNIT. ALL WATER DRAIN AND VENTING HOLES ARE 1/4" NPT.

DIMENSIONS ARE IN INCHES [MM]

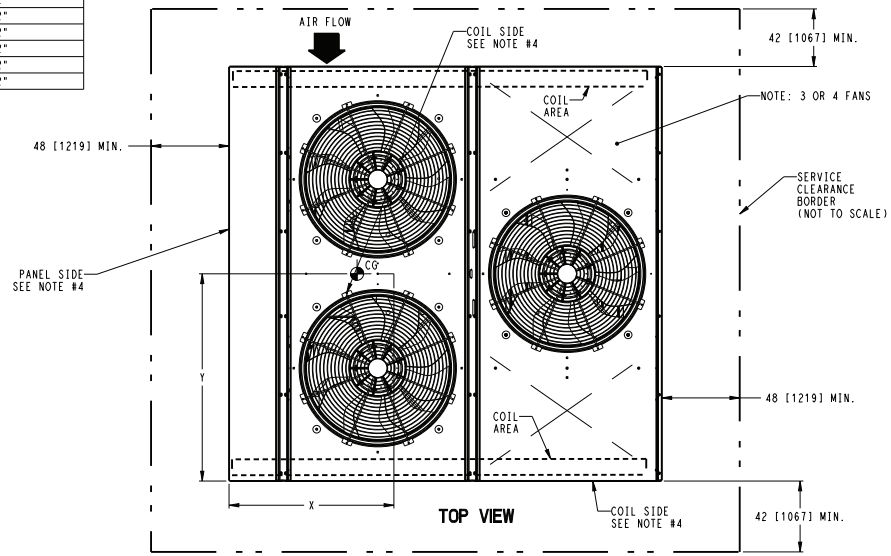


TOP VIEW

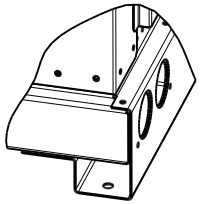

DETAIL A

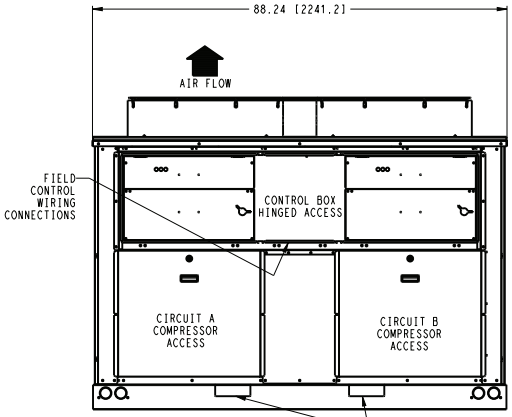


FRONT VIEW

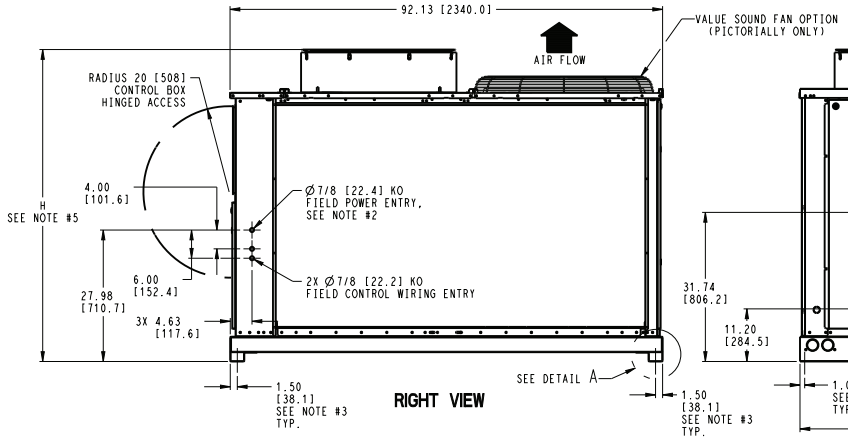


RIGHT VIEW

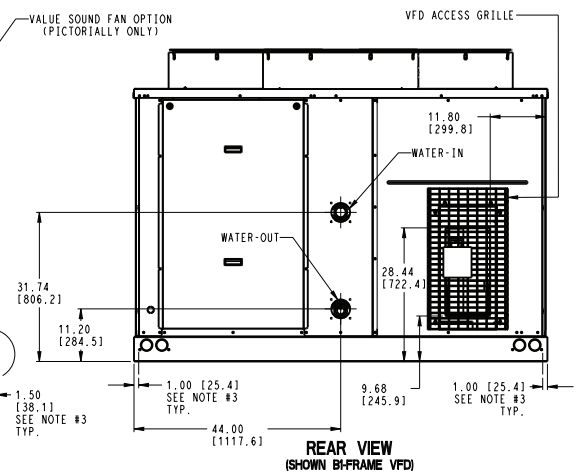


REAR VIEW
(SHOWN B1-FRAME VFD)

# Base unit dimensions — 30RAP070-090

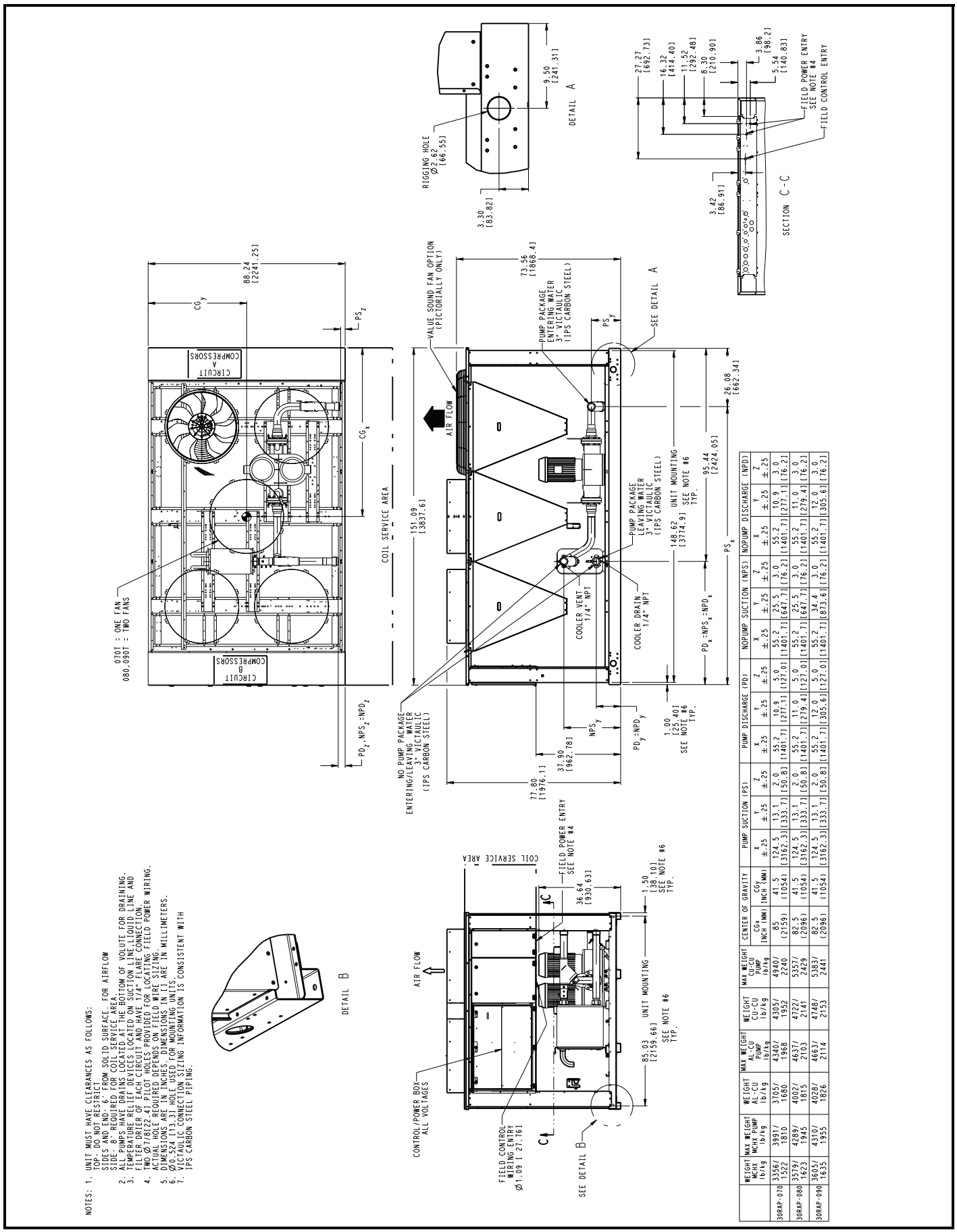


| | WEIGHT NCHX NCHX PUMP lb/kg | MAX WEIGHT NCHX NCHX PUMP lb/kg | WEIGHT AL-CU PUMP lb/kg | MAX WEIGHT AL-CU PUMP lb/kg | WEIGHT CU-CU PUMP lb/kg | MAX WEIGHT CU-CU PUMP lb/kg | CENTER OF GRAVITY Cg INCH [MM] | CGy INCH [MM] | PUMP SUCTION (PS) X ±.25 | Y ±.25 | Z ±.25 | PUMP DISCHARGE (PD) X ±.25 | Y ±.25 | Z ±.25 | NOPUMP SUCTION (NPS) X ±.25 | Y ±.25 | Z ±.25 | NOPUMP DISCHARGE (NPD) X ±.25 | Y ±.25 | Z ±.25 |
|---|---|---|---|---|---|---|---|---|---|---|---|---|---|---|---|---|---|---|---|---|
| 30RAP-070 | 3356/ 1522 | 3991/ 1810 | 3705/ 1680 | 4340/ 1968 | 4305/ 1952 | 4940/ 2240 | 85 (2159) | 41.5 (1054) | 124.5 [3162.3] | 13.1 [333.7] | 2.0 [50.8] | 55.2 [1401.7] | 10.9 [277.1] | 5.0 [127.0] | 55.2 [1401.7] | 25.5 [647.7] | 3.0 [76.2] | 55.2 [1401.7] | 10.9 [277.1] | 3.0 [76.2] |
| 30RAP-080 | 3579/ 1623 | 4289/ 1945 | 4002/ 1815 | 4637/ 2103 | 4722/ 2141 | 5357/ 2429 | 82.5 (2096) | 41.5 (1054) | 124.5 [3162.3] | 13.1 [333.7] | 2.0 [50.8] | 55.2 [1401.7] | 11.0 [279.4] | 5.0 [127.0] | 55.2 [1401.7] | 25.5 [647.7] | 3.0 [76.2] | 55.2 [1401.7] | 11.0 [279.4] | 3.0 [76.2] |
| 30RAP-090 | 3605/ 1635 | 4310/ 1955 | 4028/ 1826 | 4663/ 2114 | 4748/ 2153 | 5383/ 2441 | 82.5 (2096) | 41.5 (1054) | 124.5 [3162.3] | 13.1 [333.7] | 2.0 [50.8] | 55.2 [1401.7] | 12.0 [305.6] | 5.0 [127.0] | 55.2 [1401.7] | 34.4 [873.6] | 3.0 [76.2] | 55.2 [1401.7] | 12.0 [305.6] | 3.0 [76.2] |

# Base unit dimensions — 30RAP100, 115

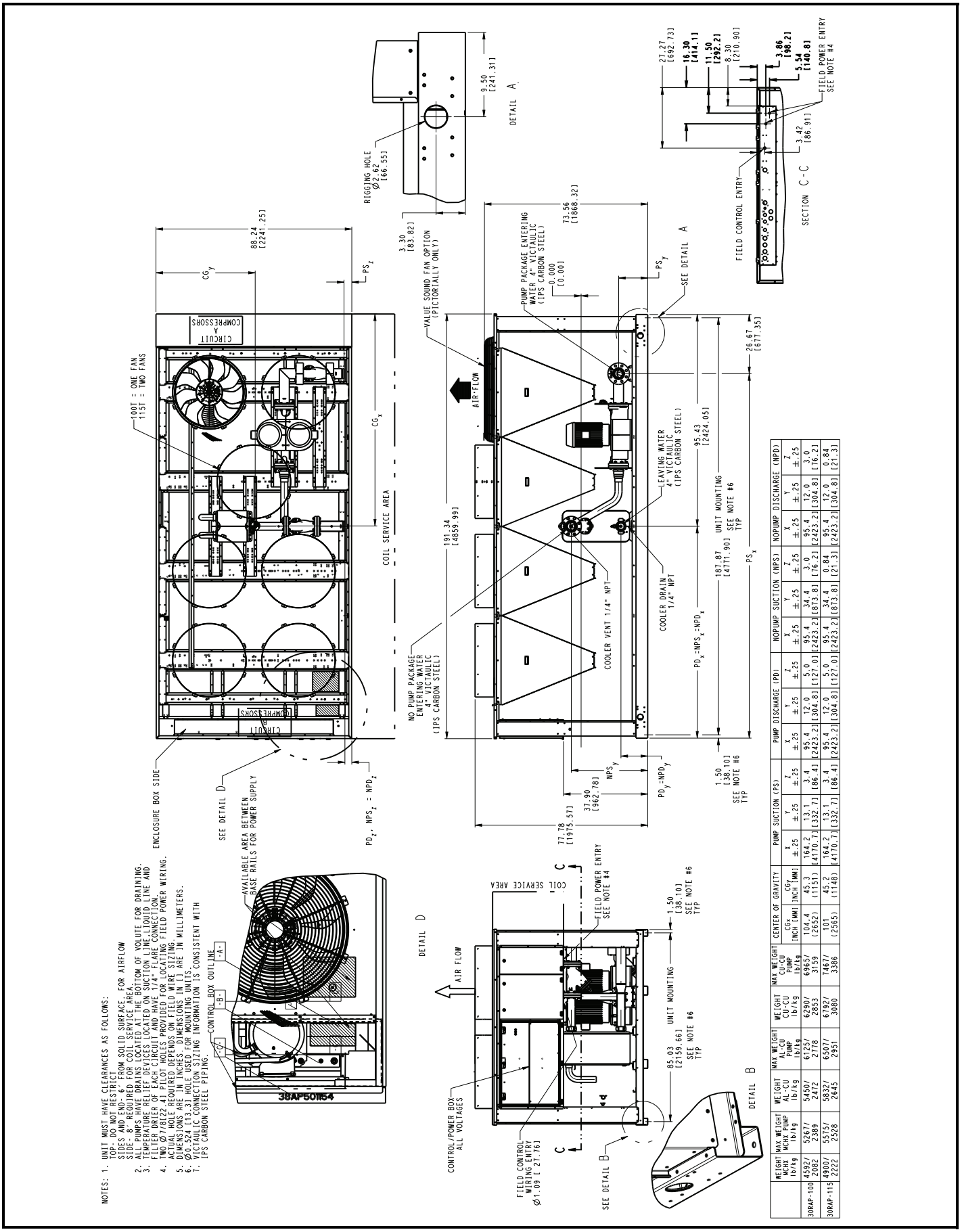


| | WEIGHT MCHX lb/kg | MAX WEIGHT MCHX PUMP lb/kg | WEIGHT AL-CU lb/kg | MAX WEIGHT AL-CU PUMP lb/kg | WEIGHT CU-CU lb/kg | MAX WEIGHT CU-CU PUMP lb/kg | CENTER OF GRAVITY CGx INCH [MM] | CGy INCH [MM] | PUMP SUCTION (PS) X ±.25 | Y ±.25 | Z ±.25 | PUMP DISCHARGE (PD) X ±.25 | Y ±.25 | Z ±.25 | NOPUMP SUCTION (NPS) X ±.25 | Y ±.25 | Z ±.25 | NOPUMP DISCHARGE (NPD) X ±.25 | Y ±.25 | Z ±.25 |
|---|---|---|---|---|---|---|---|---|---|---|---|---|---|---|---|---|---|---|---|---|
| 30RAP-100 | 4592/ 2082 | 5267/ 2389 | 5450/ 2472 | 6125/ 2778 | 6290/ 2853 | 6965/ 3159 | 104.4 (2652) | 45.3 (1151) | 164.2 [4170.7] | 13.1 [332.7] | 3.4 [86.4] | 95.4 [2423.2] | 12.0 [304.8] | 5.0 [127.0] | 95.4 [2423.2] | 34.4 [873.8] | 3.0 [76.2] | 95.4 [2423.2] | 12.0 [304.8] | 3.0 [76.2] |
| 30RAP-115 | 4900/ 2222 | 5575/ 2528 | 5832/ 2645 | 6507/ 2951 | 6792/ 3080 | 7467/ 3386 | 101 (2565) | 45.2 (1148) | 164.2 [4170.7] | 13.1 [332.7] | 3.4 [86.4] | 95.4 [2423.2] | 12.0 [304.8] | 5.0 [127.0] | 95.4 [2423.2] | 34.4 [873.8] | 0.84 [21.3] | 95.4 [2423.2] | 12.0 [304.8] | 0.84 [21.3] |

# Base unit dimensions — 30RAP130, 150

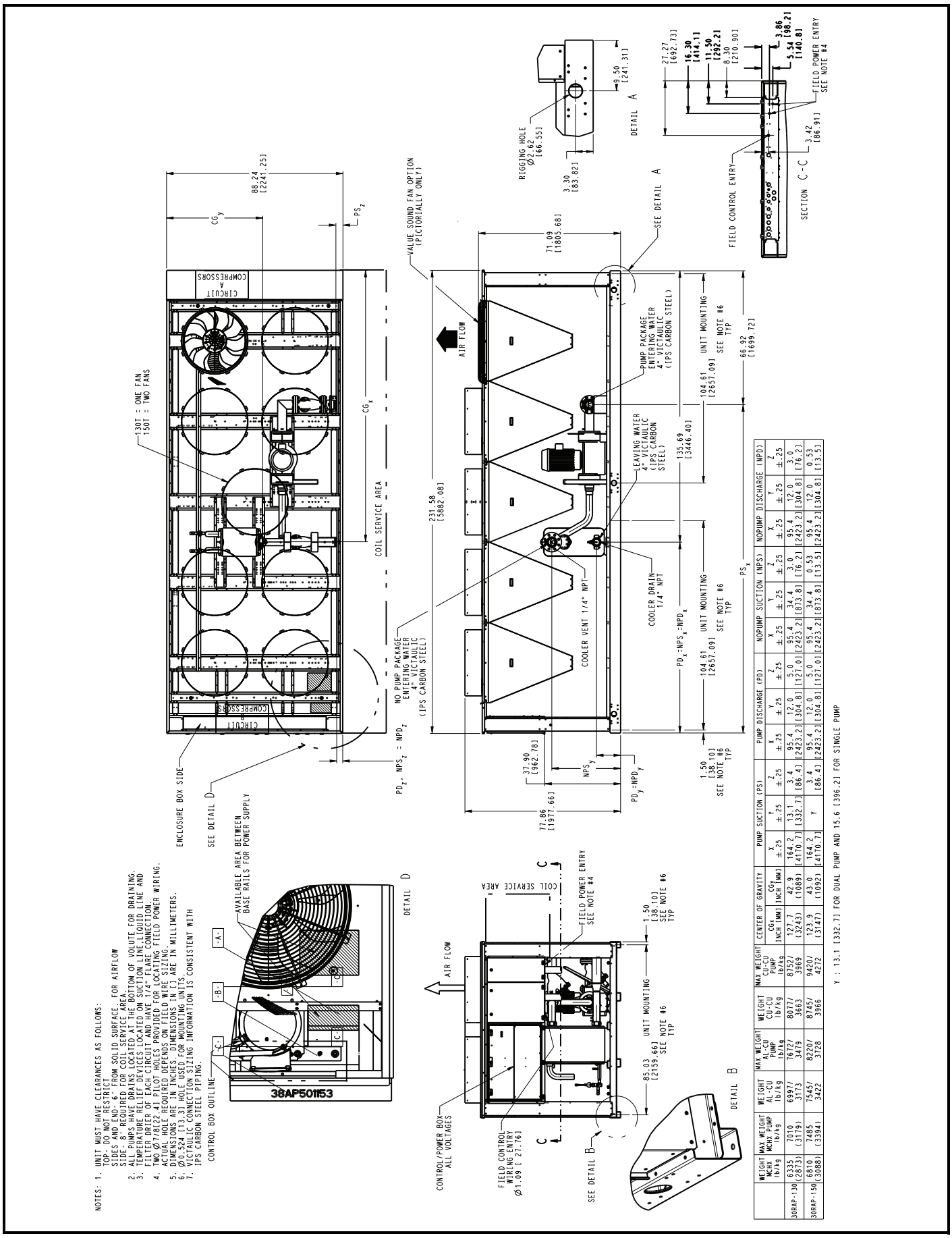


| | WEIGHT MCHX lb/kg | MAX WEIGHT MCHX PUMP lb/kg | WEIGHT AL-CU lb/kg | MAX WEIGHT AL-CU PUMP lb/kg | WEIGHT CU-CU lb/kg | MAX WEIGHT CU-CU PUMP lb/kg | CENTER OF GRAVITY Cgx INCH [MM] | CENTER OF GRAVITY Cgy INCH [MM] | PUMP SUCTION (PS) X ±.25 | PUMP SUCTION (PS) Y ±.25 | PUMP SUCTION (PS) Z ±.25 | PUMP DISCHARGE (PD) X ±.25 | PUMP DISCHARGE (PD) Y ±.25 | PUMP DISCHARGE (PD) Z ±.25 | NOPUMP SUCTION (NPS) X ±.25 | NOPUMP SUCTION (NPS) Y ±.25 | NOPUMP SUCTION (NPS) Z ±.25 | NOPUMP DISCHARGE (NPD) X ±.25 | NOPUMP DISCHARGE (NPD) Y ±.25 | NOPUMP DISCHARGE (NPD) Z ±.25 |
|---|---|---|---|---|---|---|---|---|---|---|---|---|---|---|---|---|---|---|---|---|
| 30RAP-130 | 6335 (2873) | 7010 (3179) | 6997/ 3173 | 7612/ 3479 | 8077/ 3663 | 8752/ 3969 | 127.7 (3243) | 42.9 (1089) | 164.2 [4170.7] | 13.1 [332.7] | 3.4 [86.4] | 95.4 [2423.2] | 12.0 [304.8] | 5.0 [127.0] | 95.4 [2423.2] | 34.4 [873.8] | 3.0 [76.2] | 95.4 [2423.2] | 12.0 [304.8] | 3.0 [76.2] |
| 30RAP-150 | 6810 (3088) | 7485 (3394) | 7545/ 3422 | 8220/ 3728 | 8745/ 3966 | 9420/ 4272 | 123.9 (3147) | 43.0 (1092) | 164.2 [4170.7] | Y | 3.4 [86.4] | 95.4 [2423.2] | 12.0 [304.8] | 5.0 [127.0] | 95.4 [2423.2] | 34.4 [873.8] | 0.53 [13.5] | 95.4 [2423.2] | 12.0 [304.8] | 0.53 [13.5] |

# Accessory dimensions

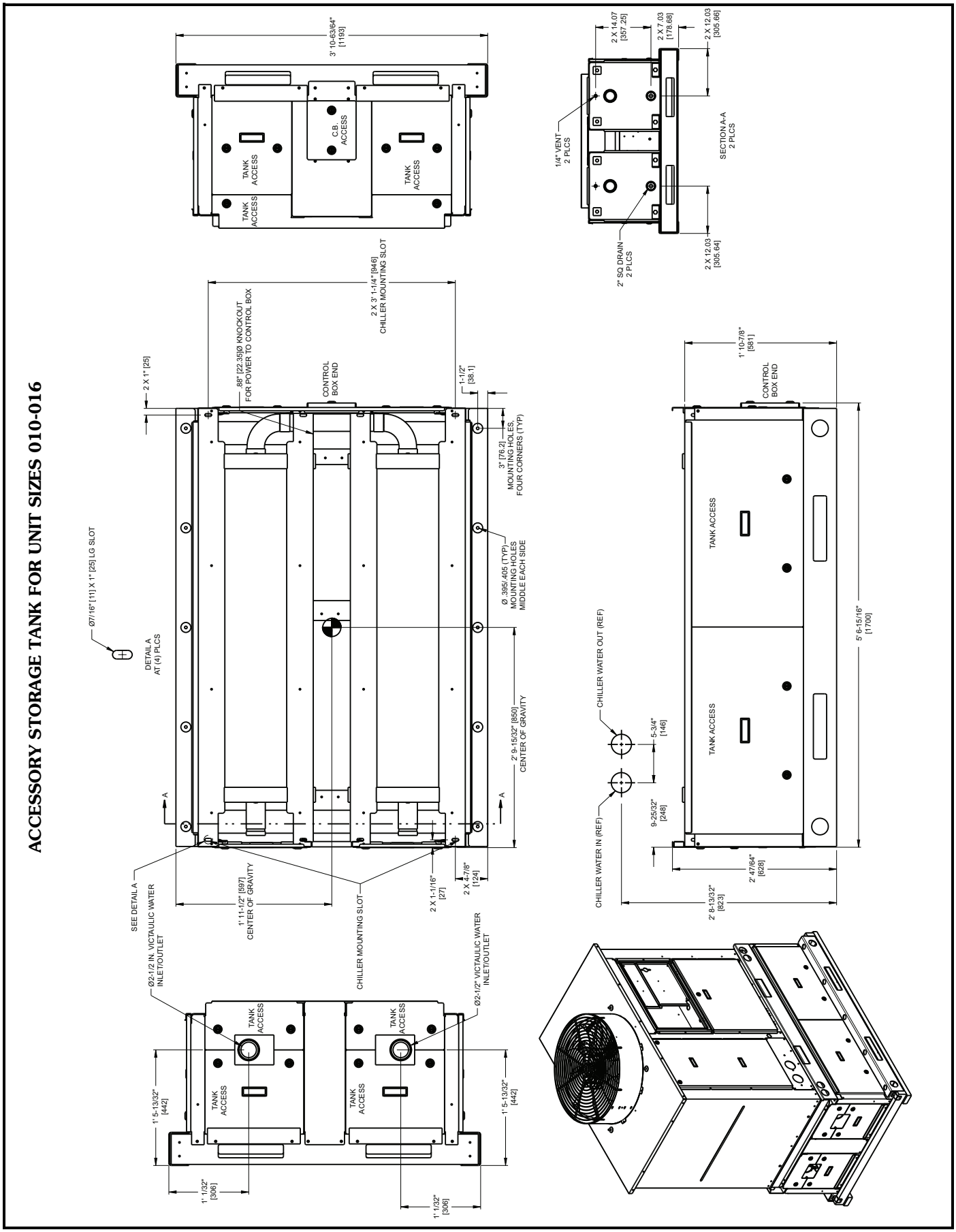

## ACCESSORY STORAGE TANK FOR UNIT SIZES 018-030

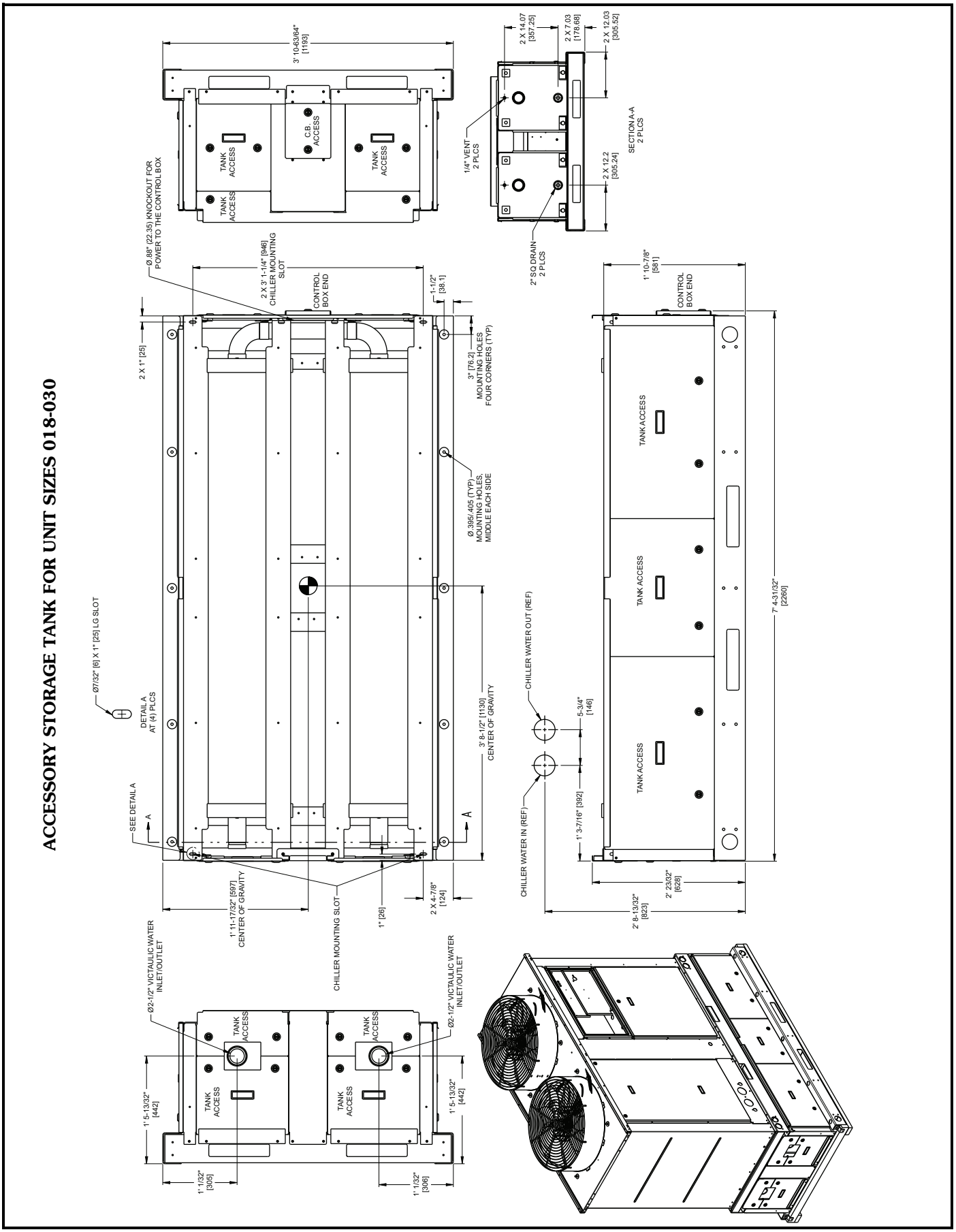

## ACCESSORY STORAGE TANK FOR UNIT SIZES 035-060

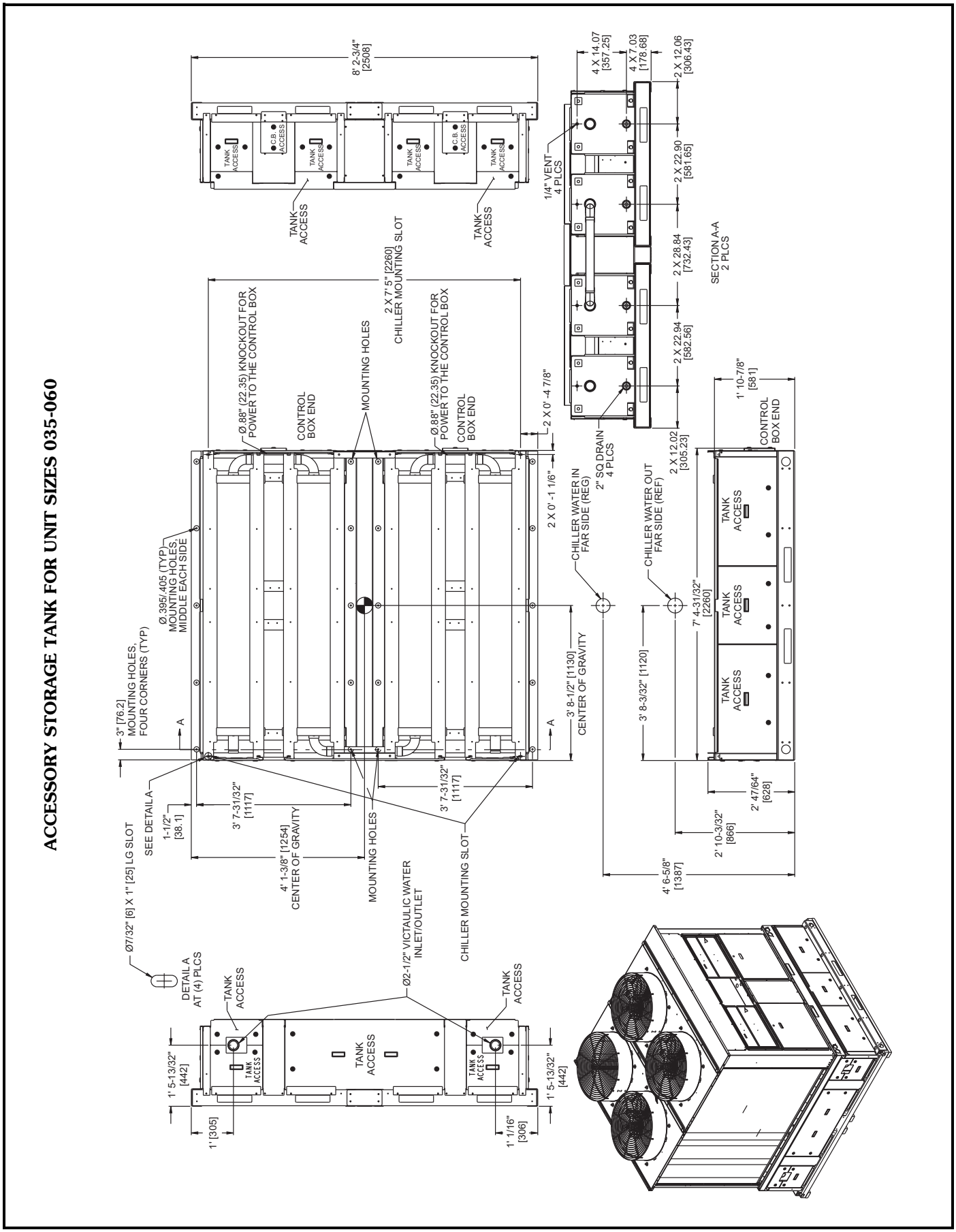

# Selection procedure

Carrier's electronic catalog chiller selection program provides quick, easy selection of Carrier chillers. The program considers specific temperature, fluid, flow requirements, system pressure drop (for proper pump selection, when required), as well as other factors, such as fouling and altitude correction.

To select a 30RAP chiller, including optional pump package when required (60 Hz only), use the NACO (North American Commercial Operation) Packaged Chiller Builder Program.

**PUMP IMPELLER SIZES (60 Hz CHILLERS ONLY)**

| UNIT 30RAP | PUMP Hp | SINGLE PUMP | | | | | DUAL PUMP | | | | |
|---|---|---|---|---|---|---|---|---|---|---|---|
| | | Option Code* | | Rpm | Impeller Dia. (in.) | Pump Curve | Option Code* | | Rpm | Impeller Dia. (in.) | Pump Curve |
| | | non-VFD | VFD | | | | non-VFD | VFD | | | |
| 010-030 | 1.5 | 2 | N/A | 3500 | 4.25 | I | 9 | N/A | 3500 | 4.25 | I |
| | 3 | 3 | N/A | 3500 | 4.75 | I | B | N/A | 3500 | 4.75 | I |
| | 3 (high head) | 4 | N/A | 3500 | 5.00 | I | C | N/A | 3500 | 5.00 | I |
| | 5 | 5 | N/A | 3500 | 5.50 | II | D | N/A | 3500 | 5.50 | II |
| 035-045 | 3 | 3 | N/A | 3500 | 4.75 | I | B | N/A | 3500 | 4.75 | I |
| | 3 (high head) | 4 | N/A | 3500 | 5.25 | I | C | N/A | 3500 | 5.25 | I |
| | 5 | 5 | N/A | 3500 | 4.50 | III | D | N/A | 3500 | 4.50 | III |
| | 5 (high head) | 6 | N/A | 3500 | 4.88 | III | F | N/A | 3500 | 4.88 | III |
| | 7.5 | 7 | N/A | 3500 | 5.50 | IV | G | N/A | 3500 | 5.50 | IV |
| 050-060 | 3 (high head) | 4 | N/A | 3500 | 5.25 | I | C | N/A | 3500 | 5.25 | I |
| | 5 | 5 | N/A | 3500 | 4.50 | III | D | N/A | 3500 | 4.50 | III |
| | 5 (high head) | 6 | N/A | 3500 | 4.88 | III | F | N/A | 3500 | 4.88 | III |
| | 7.5 | 7 | N/A | 3500 | 5.50 | IV | G | N/A | 3500 | 5.50 | IV |
| | 10 | Z | N/A | 3500 | 6.00 | IV | H | N/A | 3500 | 6.00 | IV |
| 070 | 7.5 | 3 | F | 3500 | 5.25 | VI | 8 | L | 3500 | 5.25 | IX |
| | 10 | 4 | G | 3500 | 5.75 | VI | 9 | M | 3500 | 5.90 | IX |
| 080-100 | 7.5 | 3 | F | 3500 | 5.25 | VI | 8 | L | 3500 | 5.00 | VIII |
| | 10 | 4 | G | 3500 | 5.75 | VI | 9 | M | 3500 | 5.40 | VIII |
| | 15 | 5 | H | 3500 | 6.50 | VI | B | N | 3500 | 6.10 | VIII |
| 115,130 | 5 | 2 | D | 3500 | 4.50 | X | 7 | K | 3500 | 4.50 | VIII |
| | 7.5 | 3 | F | 3500 | 5.00 | X | 8 | L | 3500 | 5.00 | VIII |
| | 10 | 4 | G | 3500 | 5.40 | X | 9 | M | 3500 | 5.40 | VIII |
| | 15 | 5 | H | 3500 | 6.10 | X | B | N | 3500 | 6.00 | VIII |
| 150 | 5 | 2 | D | 1750 | 6.50 | XI | — | — | — | — | — |
| | 7.5 | 3 | F | 1750 | 7.40 | XI | 8 | L | 3500 | 5.00 | VIII |
| | 10 | 4 | G | 3500 | 4.60 | XII | 9 | M | 3500 | 5.40 | VIII |
| | 15 | 5 | H | 3500 | 5.20 | XII | B | N | 3500 | 6.00 | VIII |

*Option Code refers to the Hydronics Option (position 12) in the model number. See the 30RAP nomenclature on pages 5 and 6 for option identification.

NOTES:
1. Pump selections are chiller size dependent. For example, option code 5 on a 30RAP010-030 chiller is not the same as option code 5 on a 30RAP035-045 chiller.
2. 30RAP chillers with Greenspeed intelligence are not available on unit sizes 010, 015, and 070-150.

**HEAT EXCHANGER PRESSURE DROP — 30RAP010-030 (ENGLISH)**

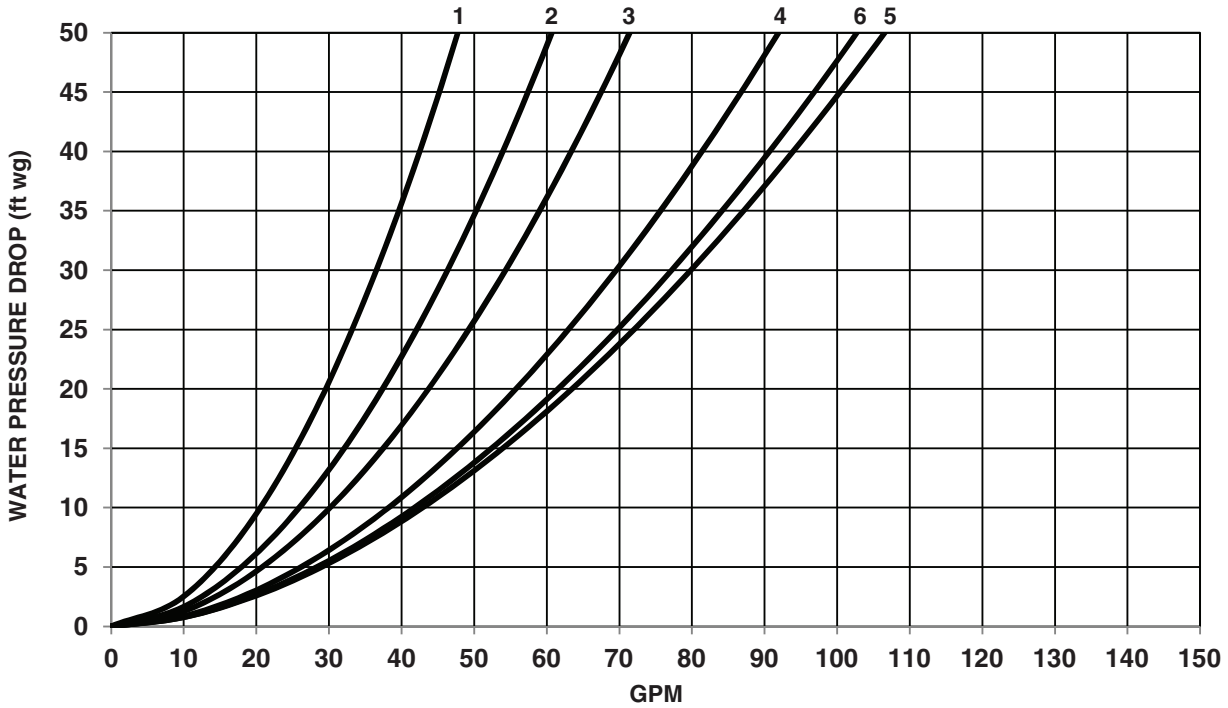


LEGEND

**1** — 30RAP010,011 **4** — 30RAP020
**2** — 30RAP015 **5** — 30RAP025
**3** — 30RAP016,018 **6** — 30RAP030

**HEAT EXCHANGER PRESSURE DROP — 30RAP035-060 (ENGLISH)**

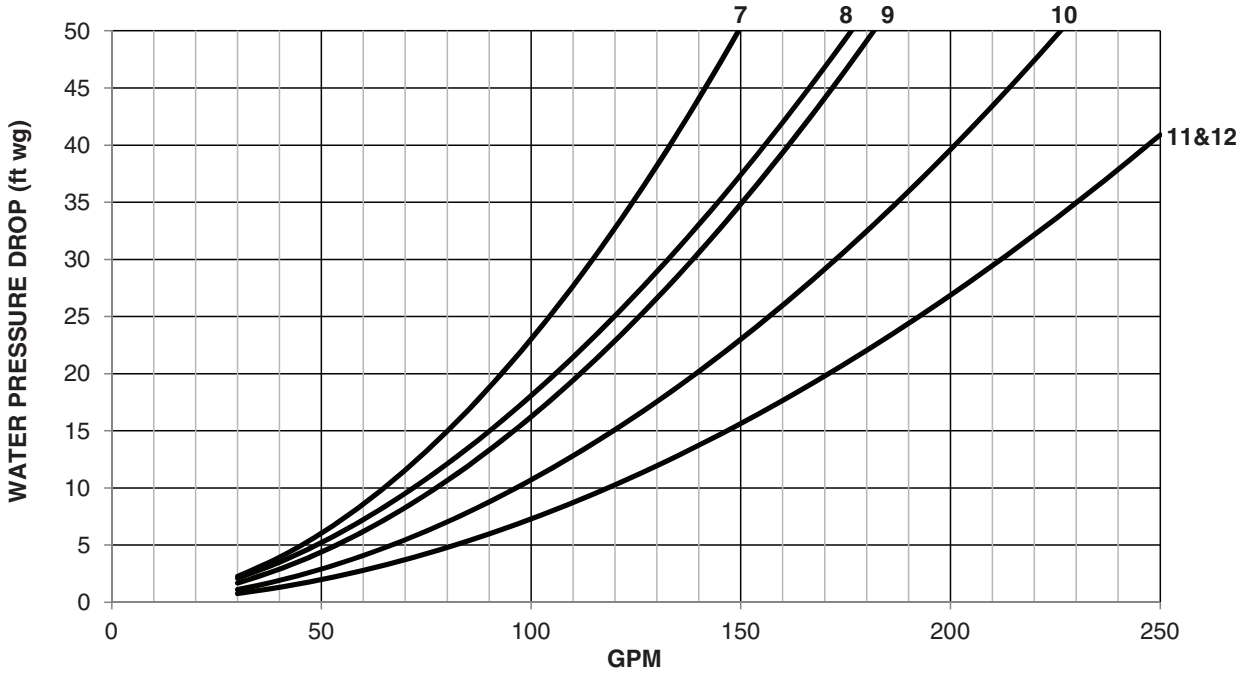


LEGEND

**7** — 30RAP035 **10** — 30RAP050
**8** — 30RAP040 **11** — 30RAP055
**9** — 30RAP045 **12** — 30RAP060

**HEAT EXCHANGER PRESSURE DROP — 30RAP070-090 (ENGLISH)**

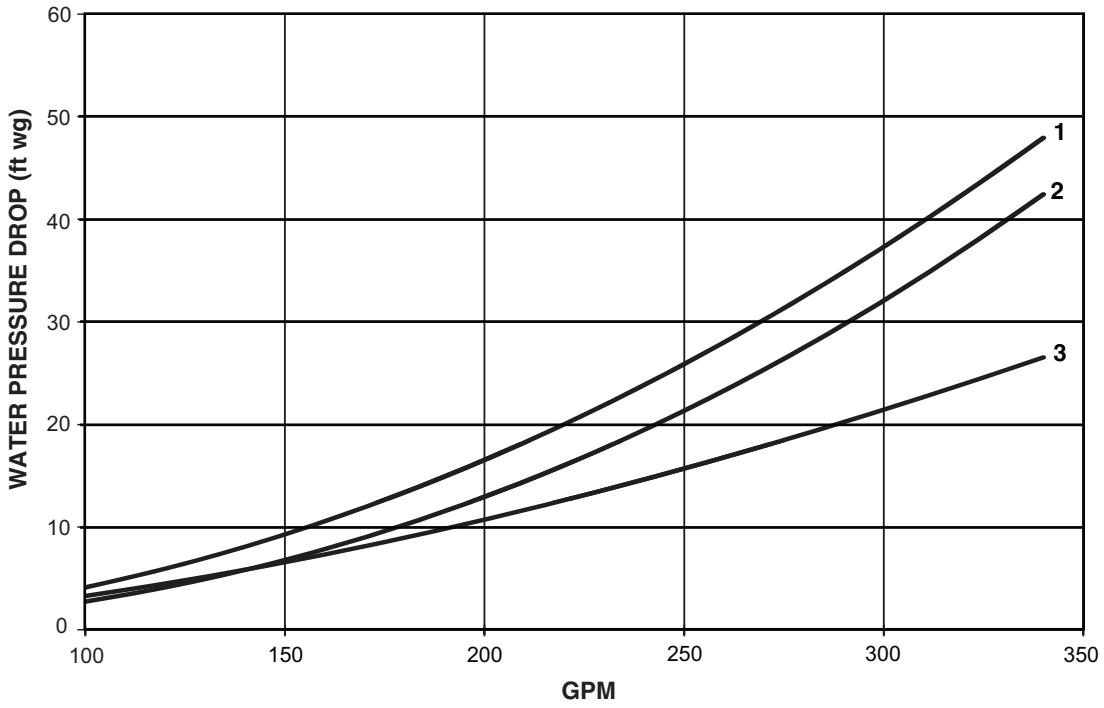


LEGEND
**1** — 30RAP070
**2** — 30RAP080
**3** — 30RAP090

**HEAT EXCHANGER PRESSURE DROP — 30RAP100-150 (ENGLISH)**

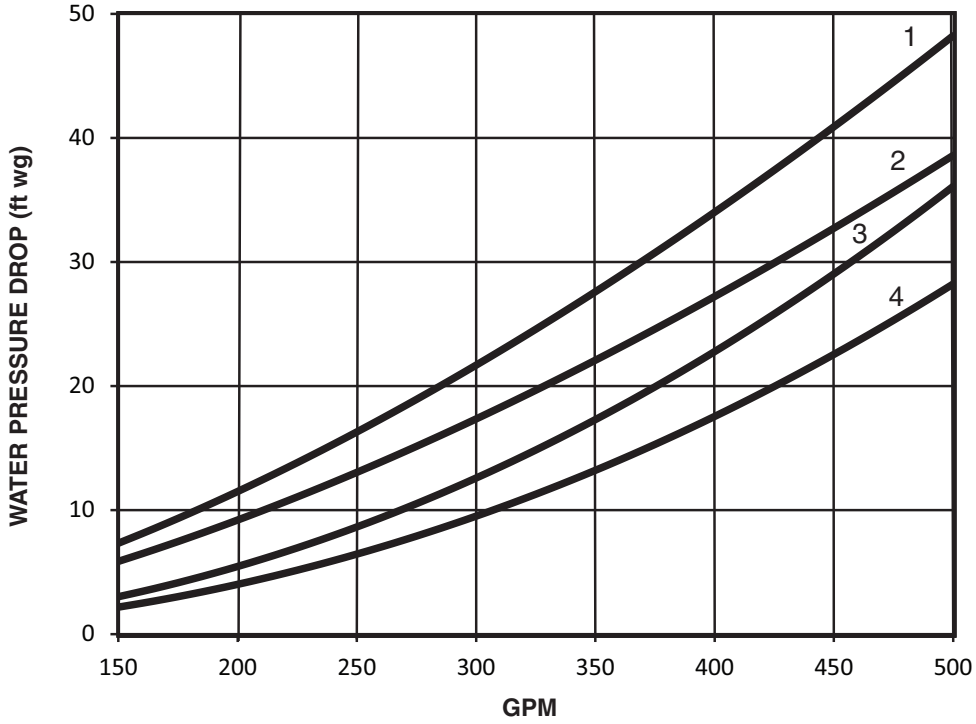


LEGEND
**1** — 30RAP100
**2** — 30RAP115
**3** — 30RAP130
**4** — 30RAP150

## HEAT EXCHANGER PRESSURE DROP — 30RAP010-030 (SI)

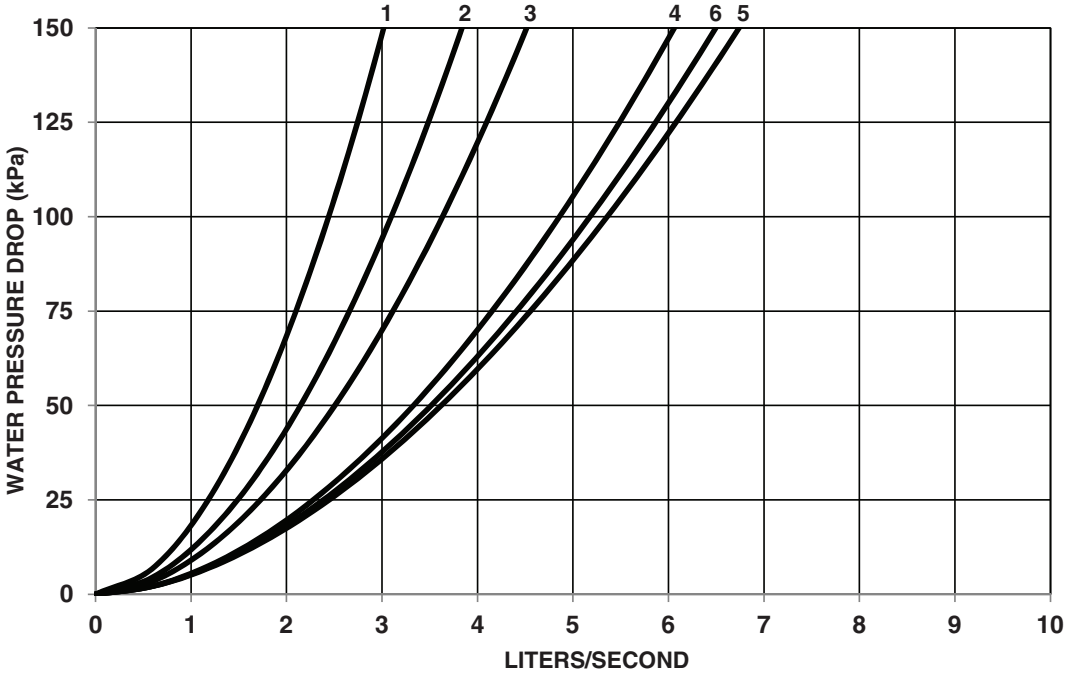


LEGEND

**1** — 30RAP010,011 **4** — 30RAP020
**2** — 30RAP015 **5** — 30RAP025
**3** — 30RAP016,018 **6** — 30RAP030

## HEAT EXCHANGER PRESSURE DROP — 30RAP035-060 (SI)

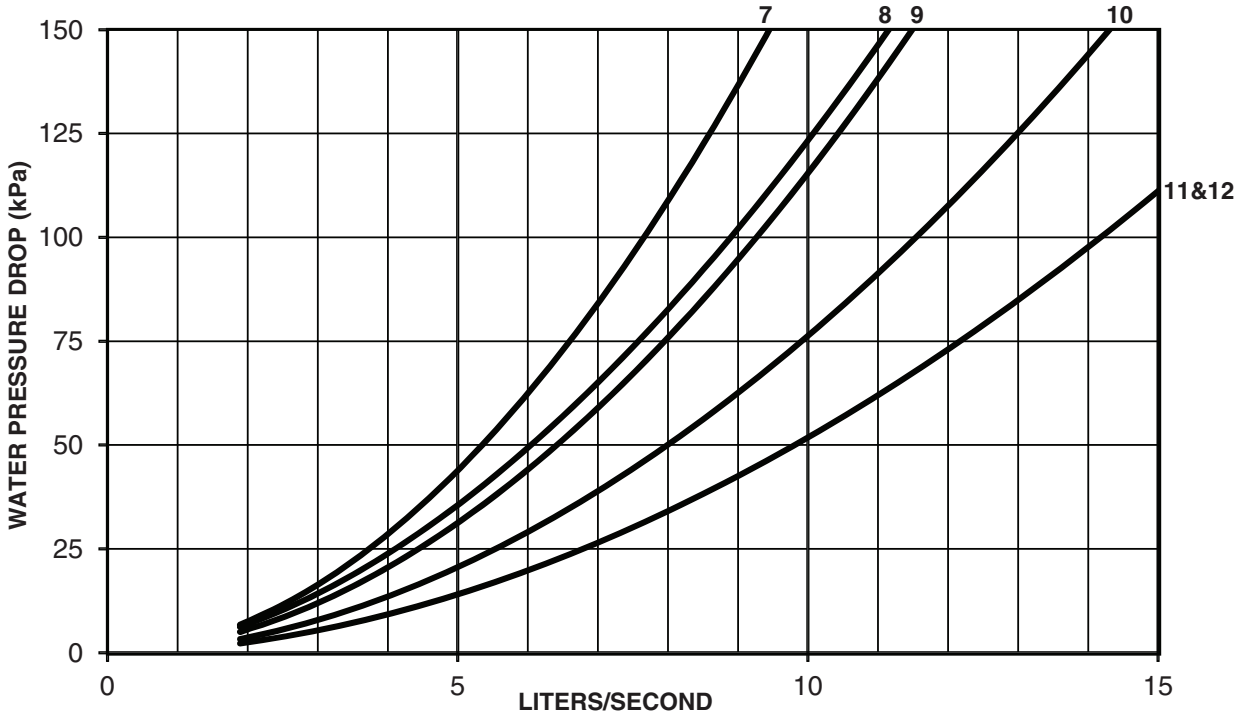


LEGEND

**7** — 30RAP035 **10** — 30RAP050
**8** — 30RAP040 **11** — 30RAP055
**9** — 30RAP045 **12** — 30RAP060

**HEAT EXCHANGER PRESSURE DROP — 30RAP070-090 (SI)**

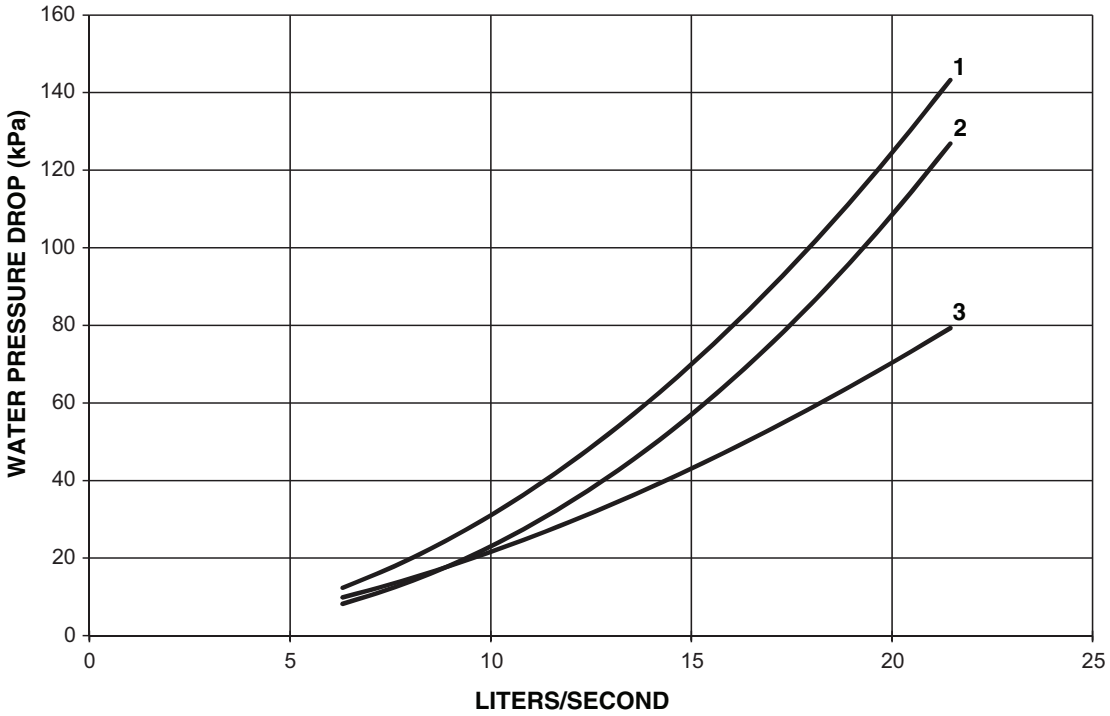


LEGEND
**1** — 30RAP070
**2** — 30RAP080
**3** — 30RAP090

**HEAT EXCHANGER PRESSURE DROP — 30RAP100-150 (SI)**

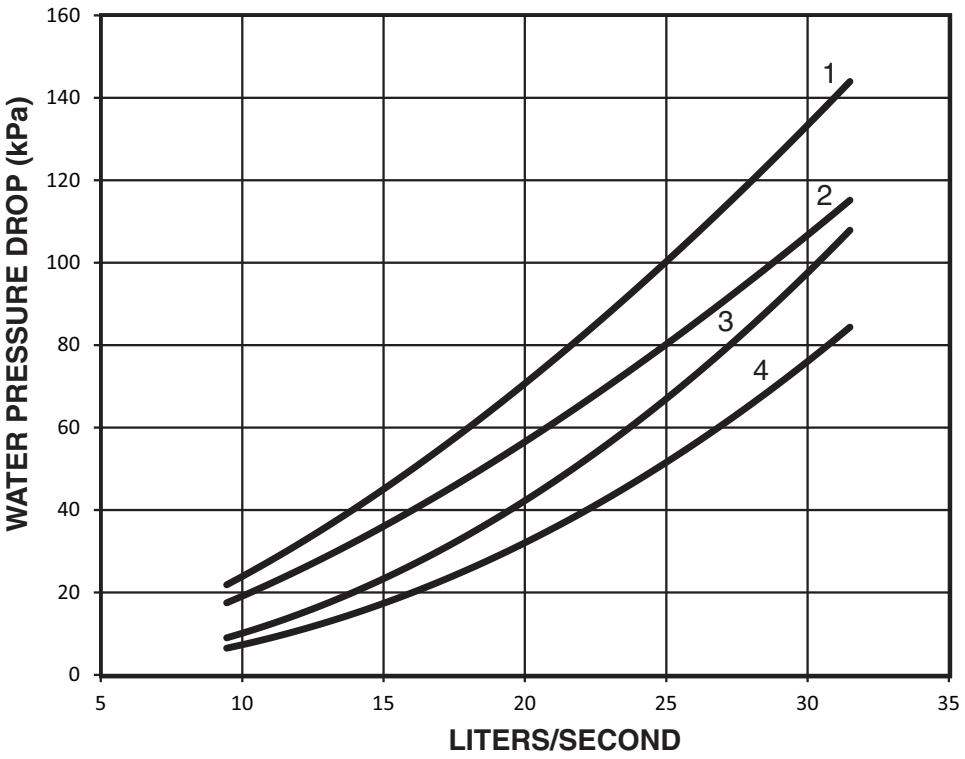


LEGEND
**1** — 30RAP100
**2** — 30RAP115
**3** — 30RAP130
**4** — 30RAP150

**UNIT PRESSURE DROP — NO HYDRONIC PACKAGE — 30RAP010-030 (ENGLISH)**

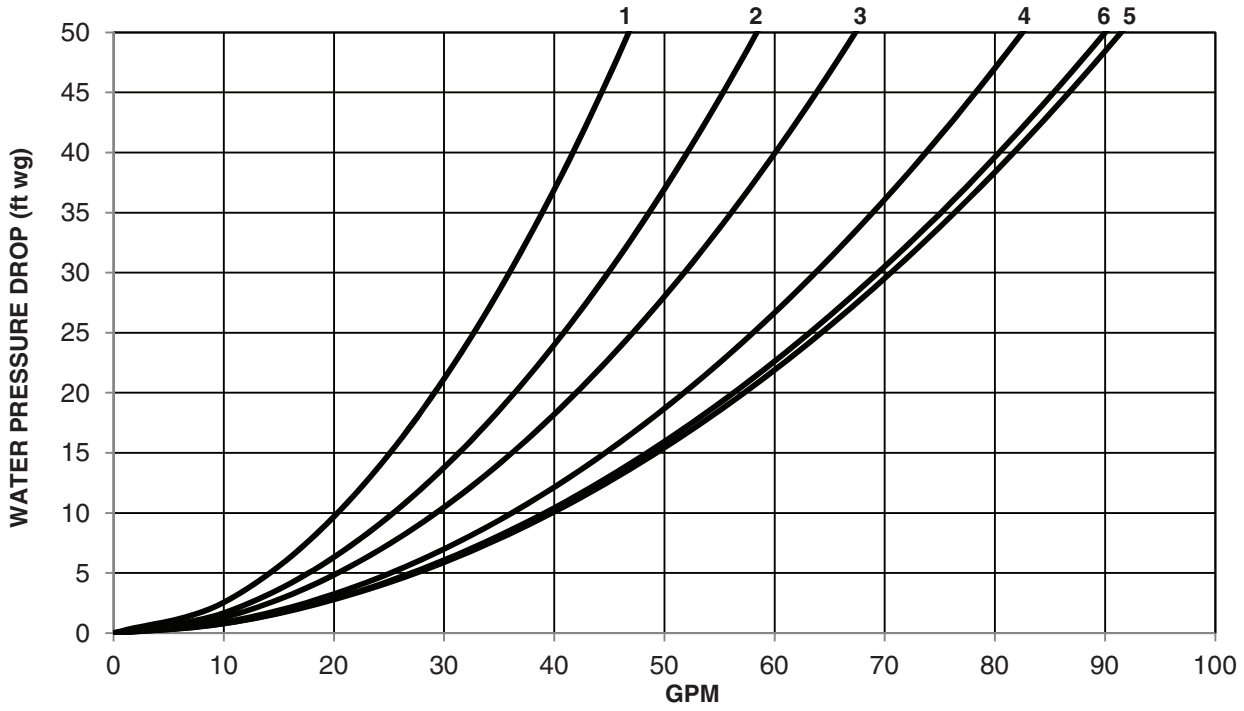


LEGEND

**1** — 30RAP010,011 **4** — 30RAP020
**2** — 30RAP015 **5** — 30RAP025
**3** — 30RAP016,018 **6** — 30RAP030

**UNIT PRESSURE DROP — NO HYDRONIC PACKAGE — 30RAP035-060 (ENGLISH)**

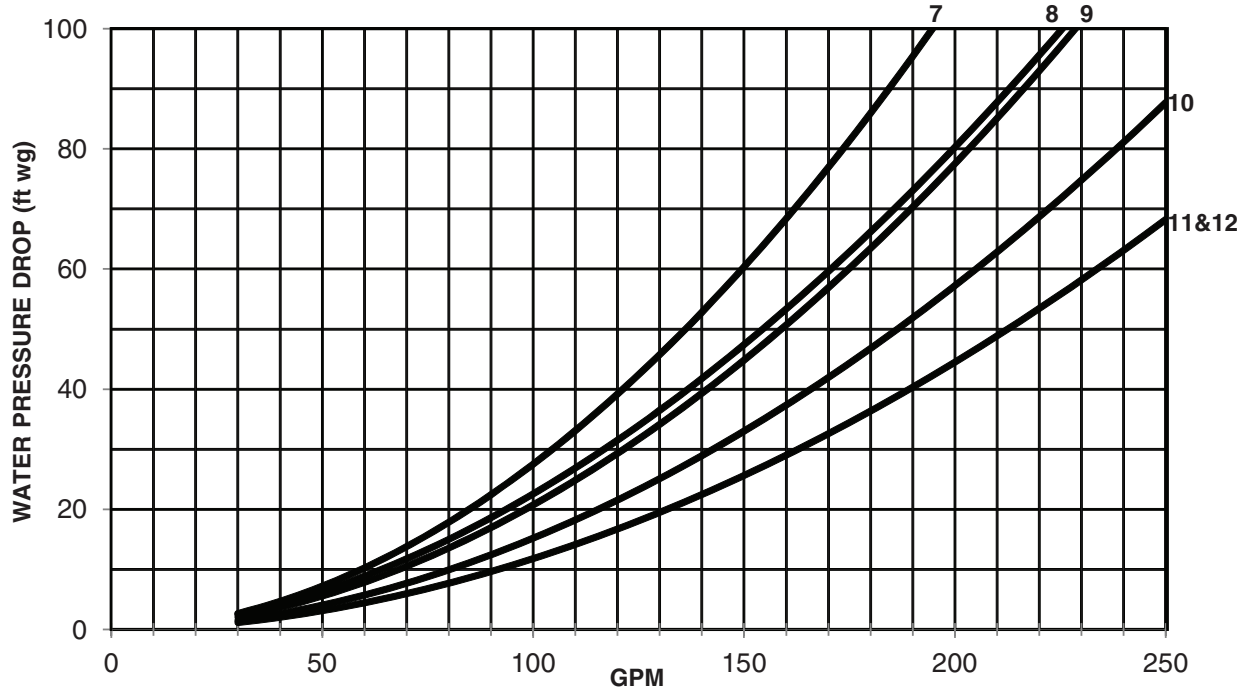


LEGEND

**7** — 30RAP035 **10** — 30RAP050
**8** — 30RAP040 **11** — 30RAP055
**9** — 30RAP045 **12** — 30RAP060

UNIT PRESSURE DROP — NO HYDRONIC PACKAGE — 30RAP070-090 (ENGLISH)

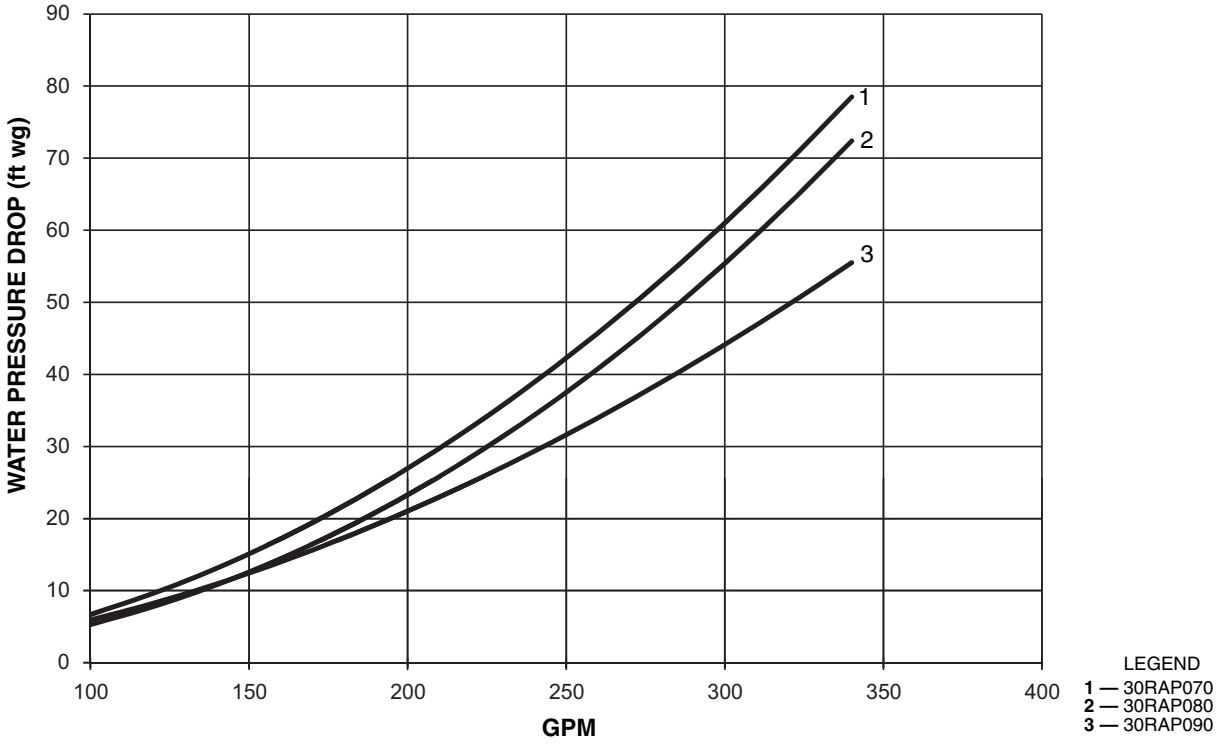


UNIT PRESSURE DROP — NO HYDRONIC PACKAGE — 30RAP100-150 (ENGLISH)

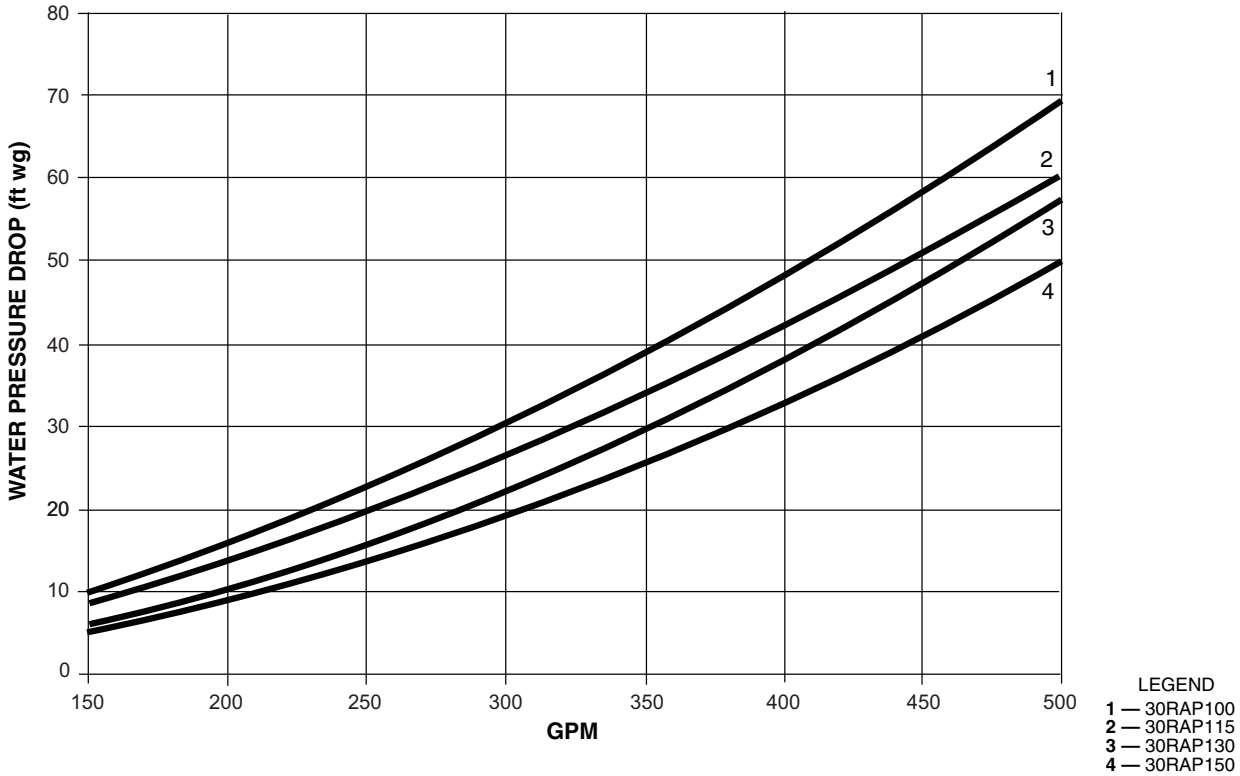

## UNIT PRESSURE DROP — NO HYDRONIC PACKAGE — 30RAP010-030 (SI)

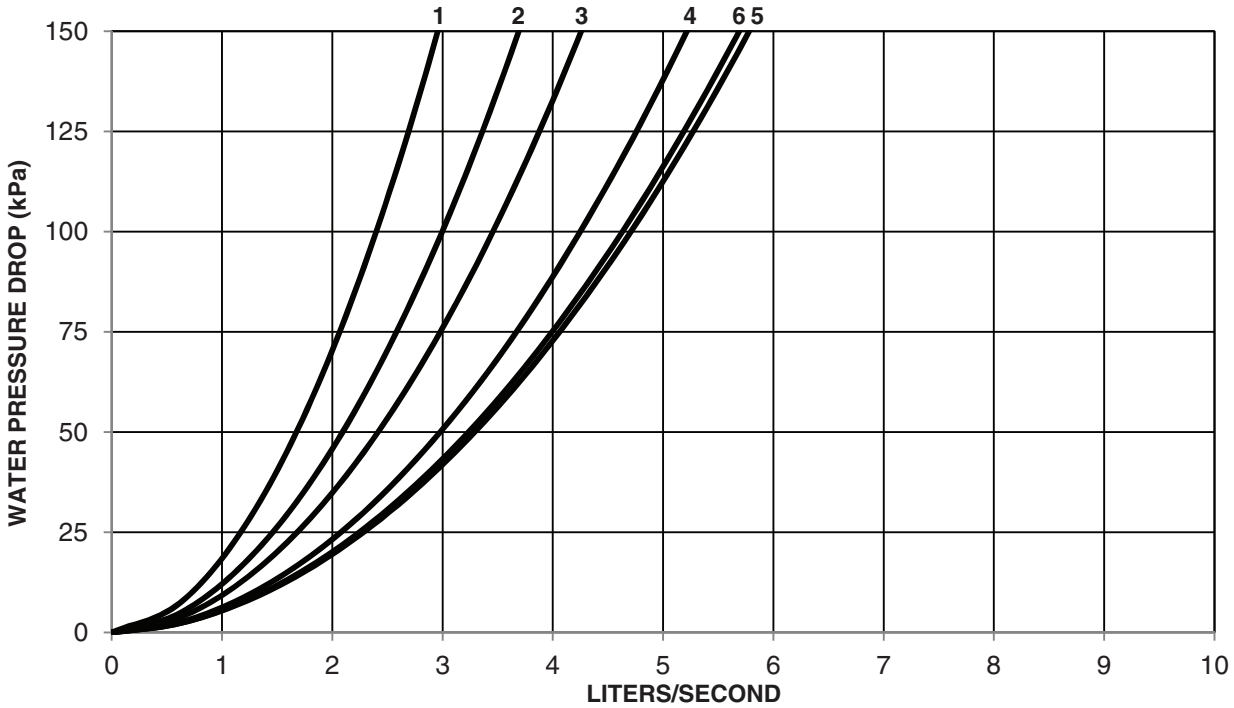


LEGEND

**1** — 30RAP010,011
**2** — 30RAP015
**3** — 30RAP016,018
**4** — 30RAP020
**5** — 30RAP025
**6** — 30RAP030

## UNIT PRESSURE DROP — NO HYDRONIC PACKAGE — 30RAP035-060 (SI)

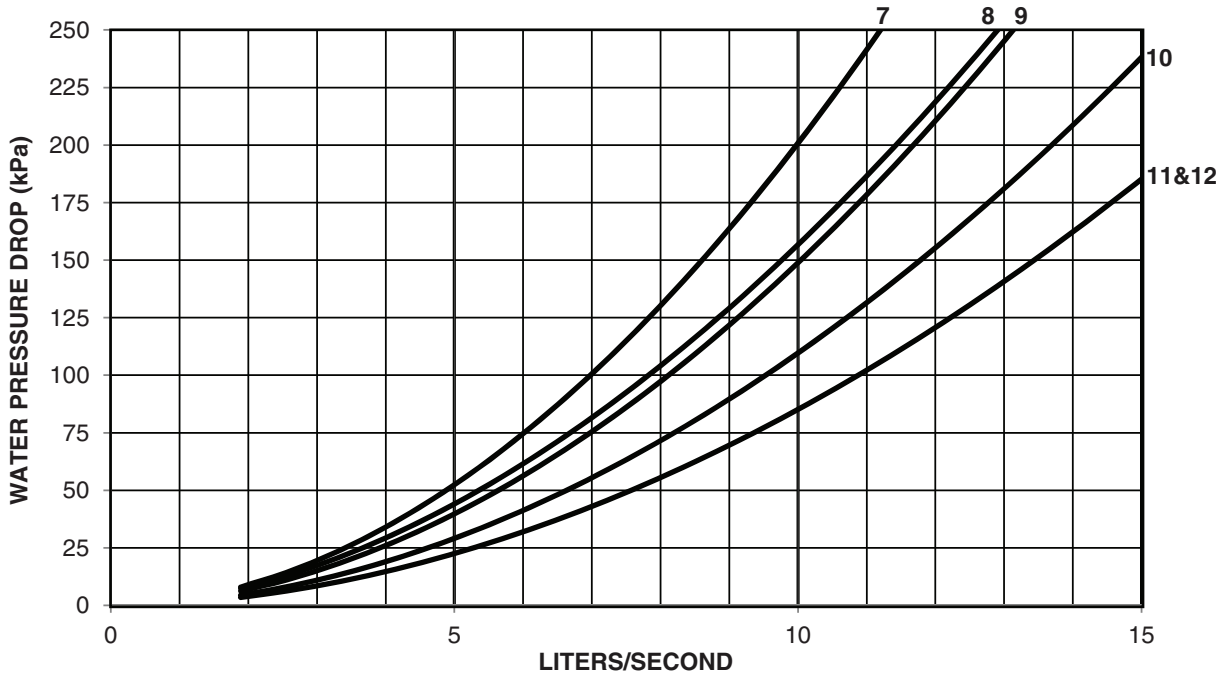


LEGEND

**7** — 30RAP035
**8** — 30RAP040
**9** — 30RAP045
**10** — 30RAP050
**11** — 30RAP055
**12** — 30RAP060

**UNIT PRESSURE DROP — NO HYDRONIC PACKAGE — 30RAP070-090 (SI)**

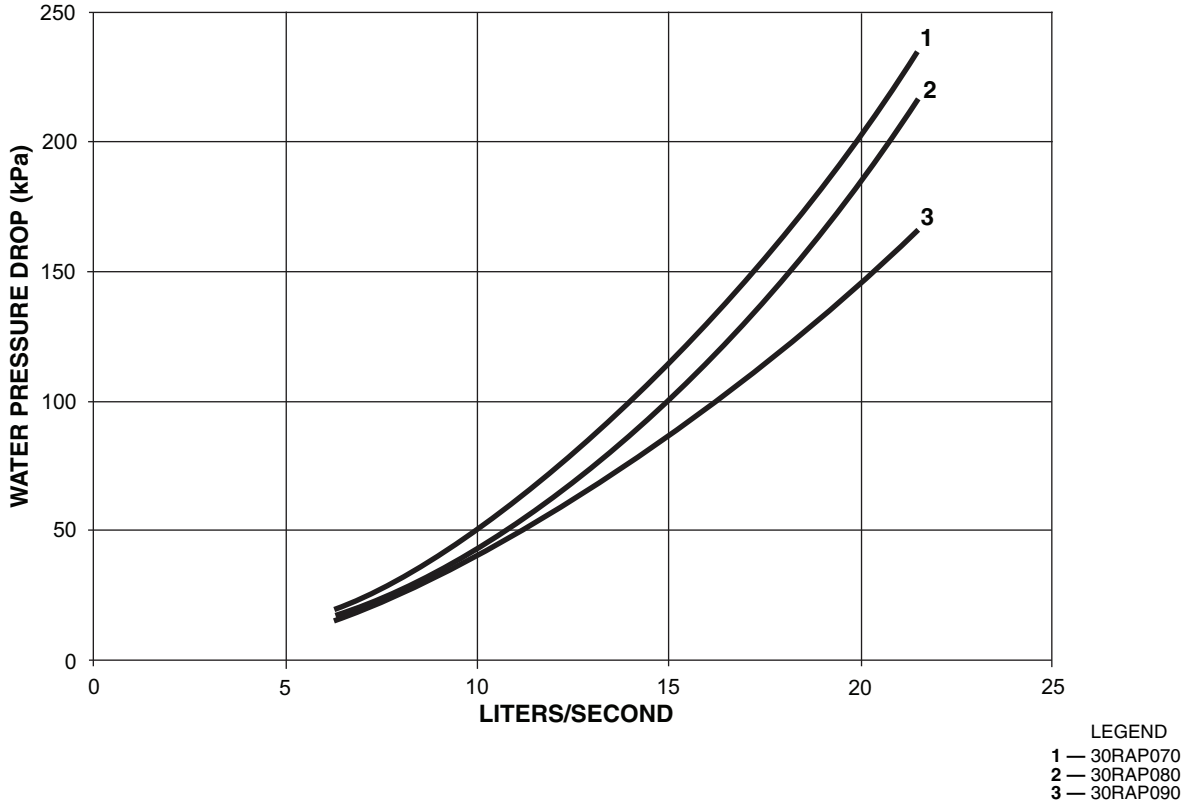


**UNIT PRESSURE DROP — NO HYDRONIC PACKAGE — 30RAP100-150 (SI)**

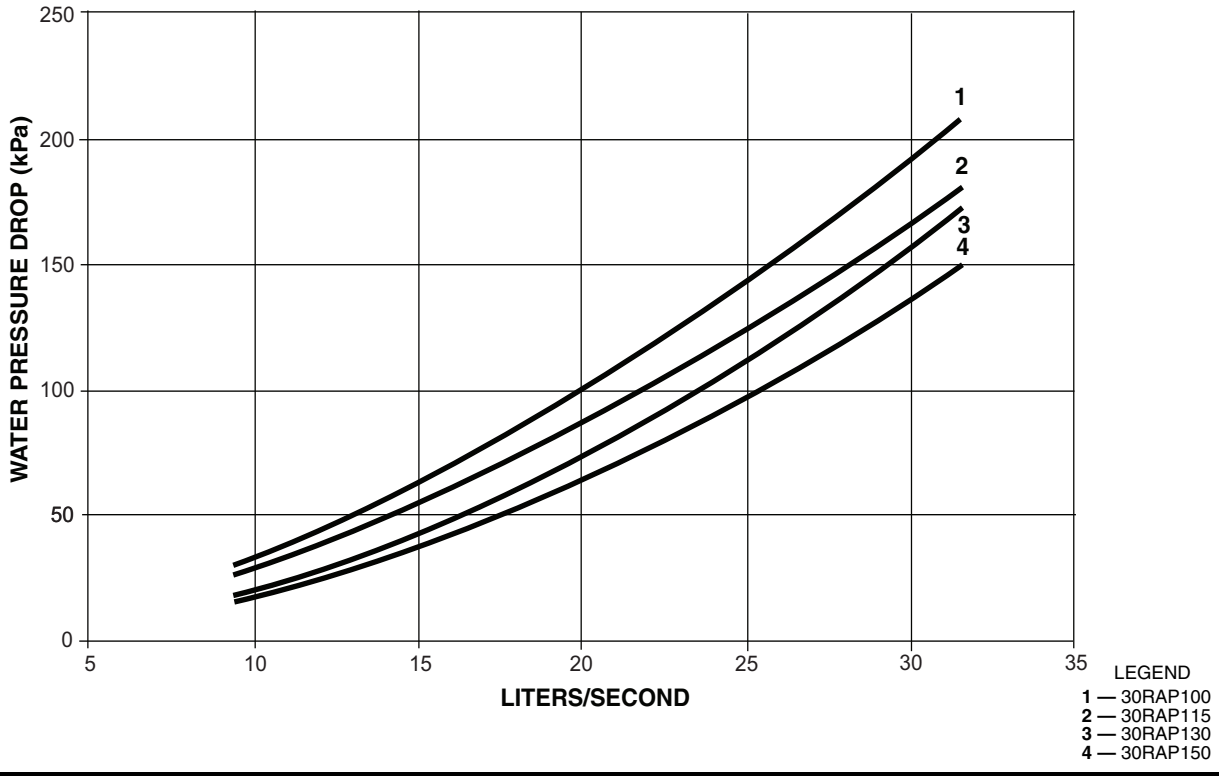

## UNIT PRESSURE DROP — SINGLE PUMP HYDRONIC PACKAGE, 60 Hz ONLY — 30RAP010-030 (ENGLISH)

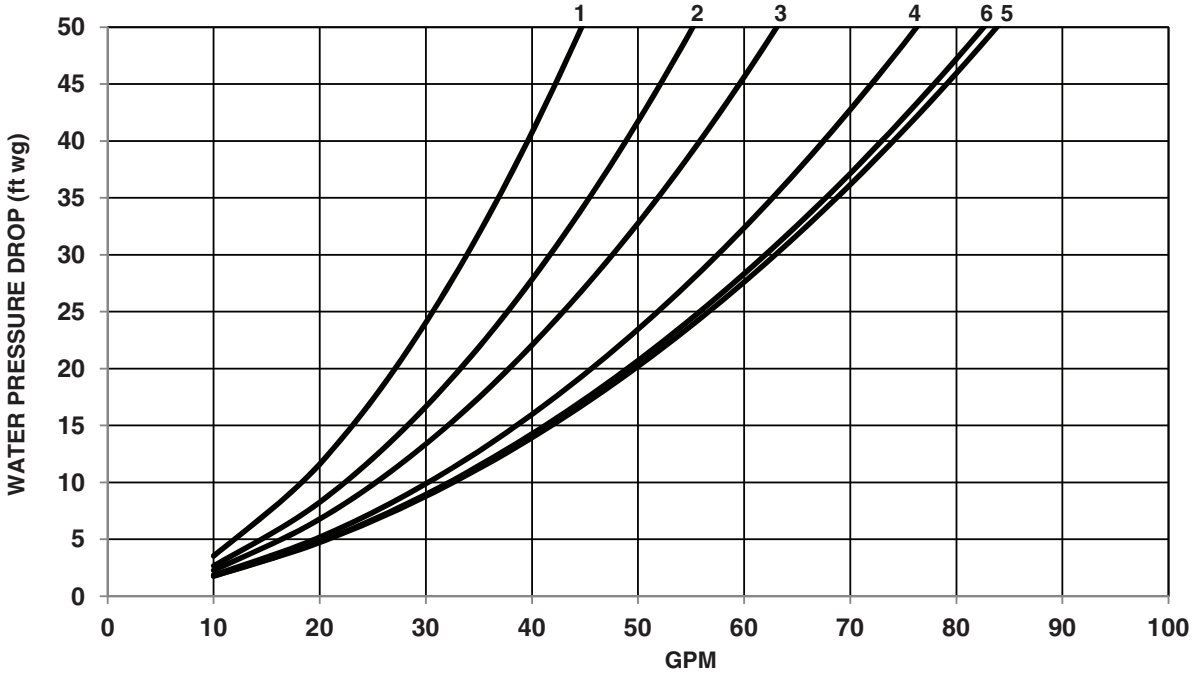


LEGEND

**1** — 30RAP010,011 **4** — 30RAP020
**2** — 30RAP015 **5** — 30RAP025
**3** — 30RAP016,018 **6** — 30RAP030

## UNIT PRESSURE DROP — SINGLE PUMP HYDRONIC PACKAGE, 60 Hz ONLY — 30RAP035-060 (ENGLISH)

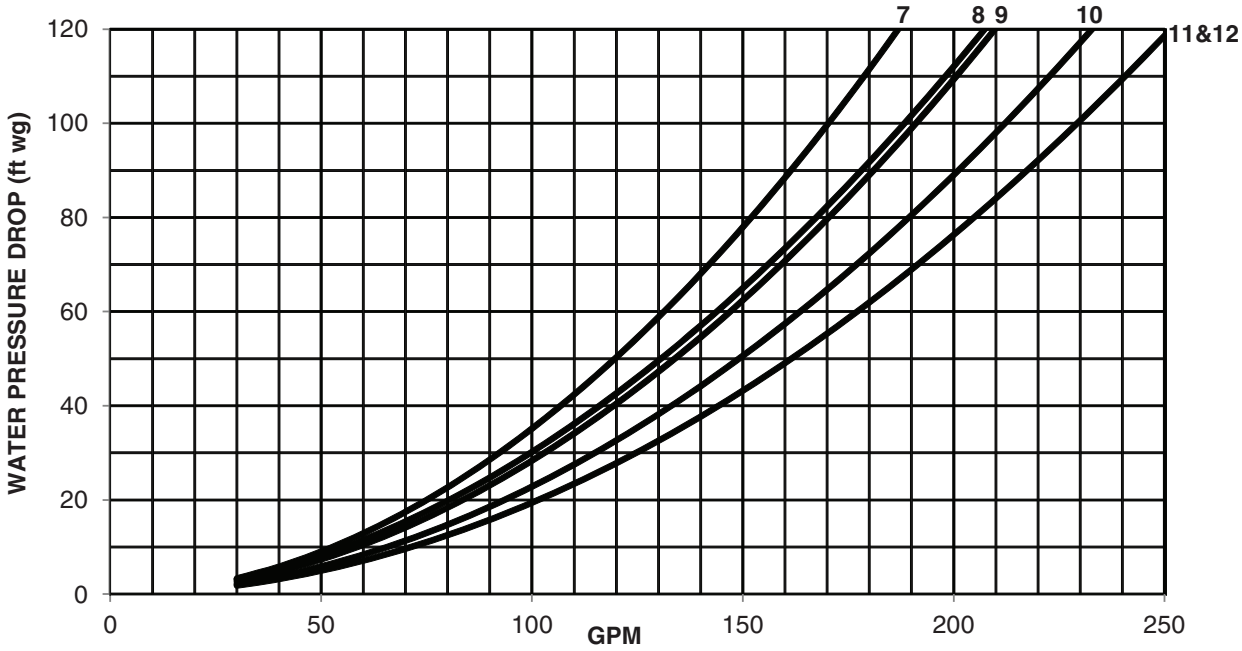


LEGEND

**7** — 30RAP035 **10** — 30RAP050
**8** — 30RAP040 **11** — 30RAP055
**9** — 30RAP045 **12** — 30RAP060

**UNIT PRESSURE DROP — SINGLE PUMP HYDRONIC PACKAGE, 60 Hz ONLY — 30RAP070-090 (ENGLISH)**

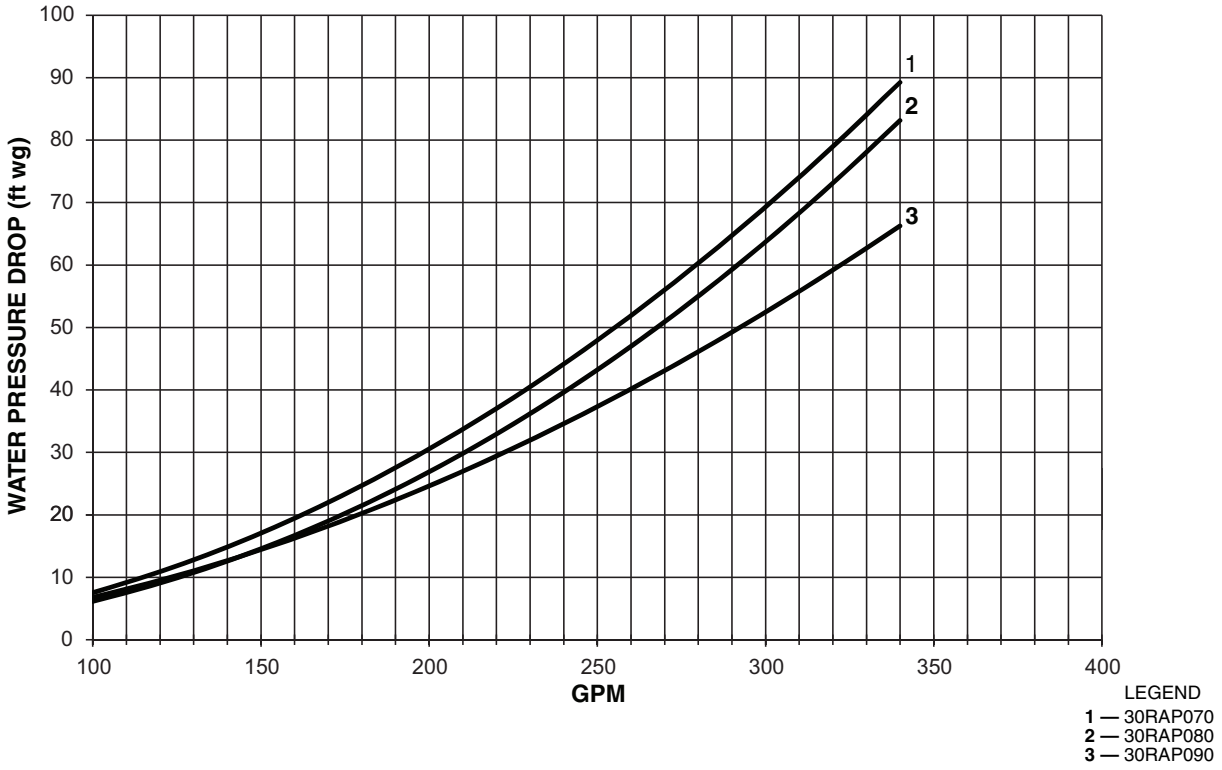


**UNIT PRESSURE DROP — SINGLE PUMP HYDRONIC PACKAGE, 60 Hz ONLY — 30RAP100-150 (ENGLISH)**

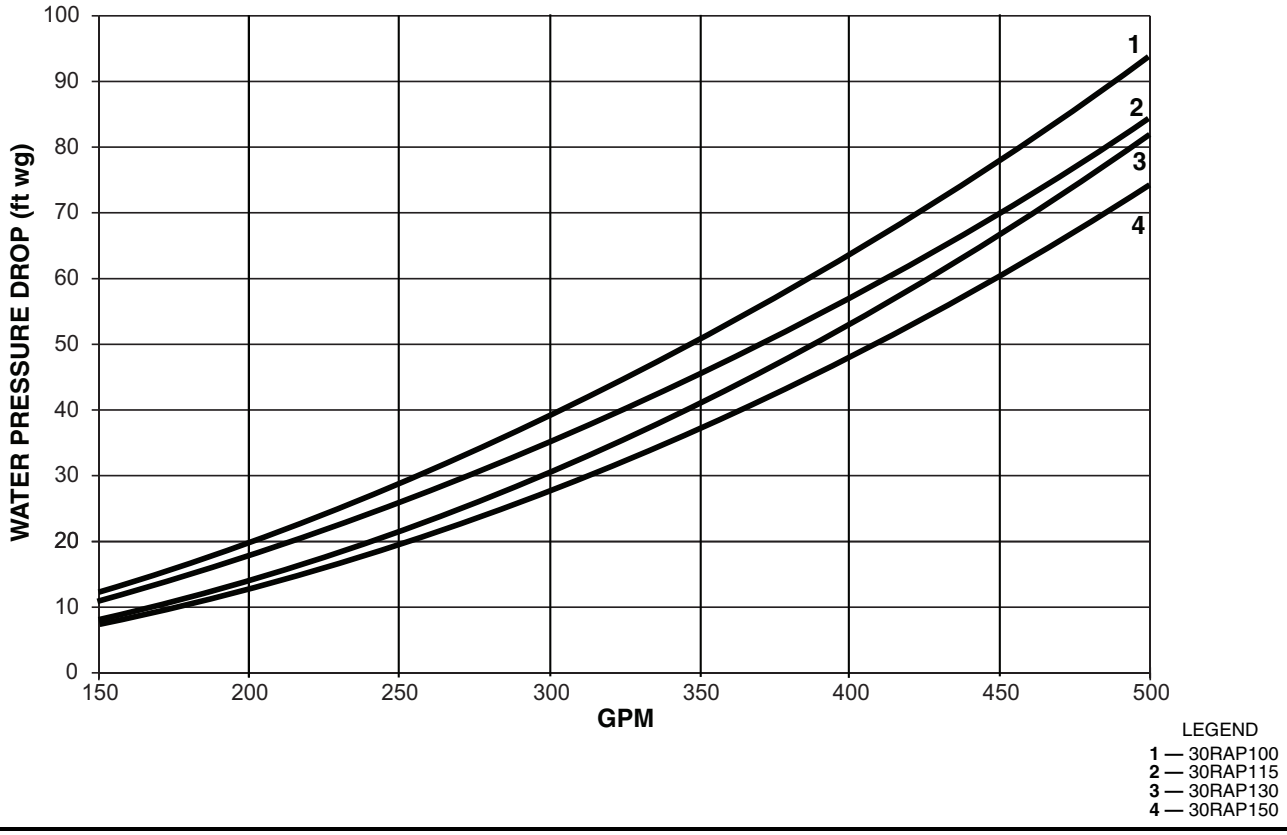

## UNIT PRESSURE DROP — SINGLE PUMP HYDRONIC PACKAGE, 60 Hz ONLY — 30RAP010-030 (SI)

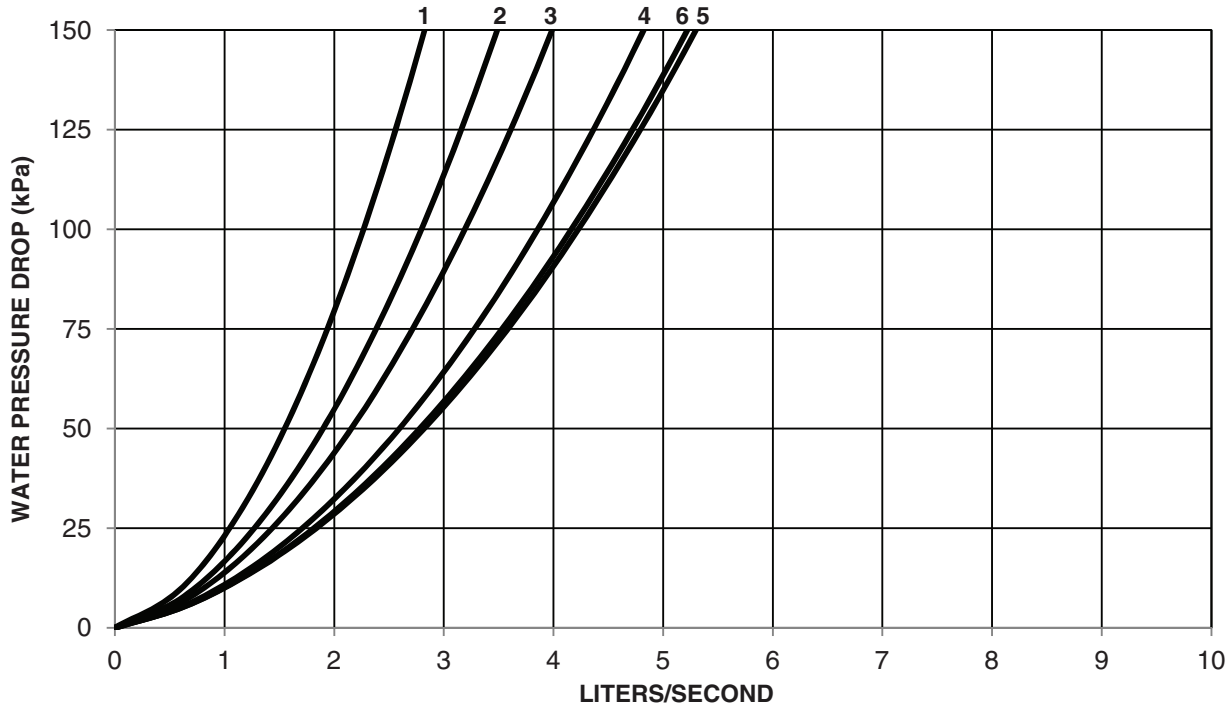


LEGEND

**1** — 30RAP010,011 **4** — 30RAP020
**2** — 30RAP015 **5** — 30RAP025
**3** — 30RAP016,018 **6** — 30RAP030

## UNIT PRESSURE DROP — SINGLE PUMP HYDRONIC PACKAGE, 60 Hz ONLY — 30RAP035-060 (SI)

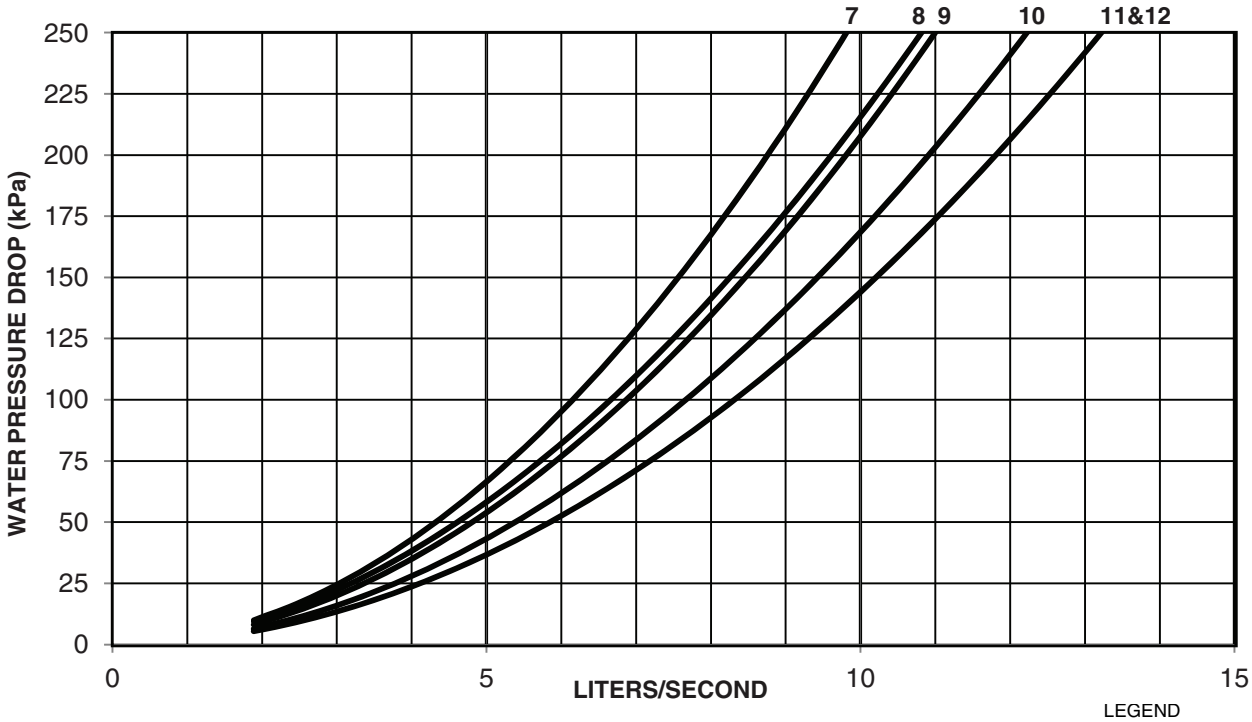


LEGEND

**7** — 30RAP035 **10** — 30RAP050
**8** — 30RAP040 **11** — 30RAP055
**9** — 30RAP045 **12** — 30RAP060

**UNIT PRESSURE DROP — SINGLE PUMP HYDRONIC PACKAGE, 60 Hz ONLY — 30RAP070-090 (SI)**

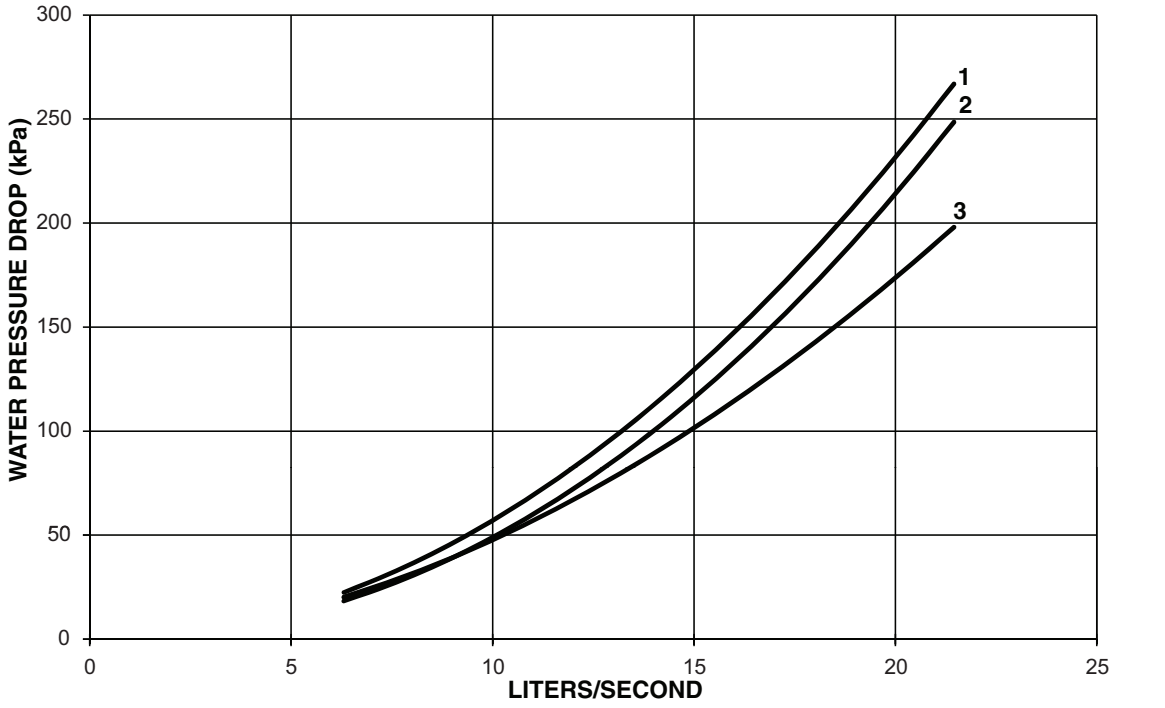


LEGEND
**1** — 30RAP070
**2** — 30RAP080
**3** — 30RAP090

**UNIT PRESSURE DROP — SINGLE PUMP HYDRONIC PACKAGE, 60 Hz ONLY — 30RAP100-150 (SI)**

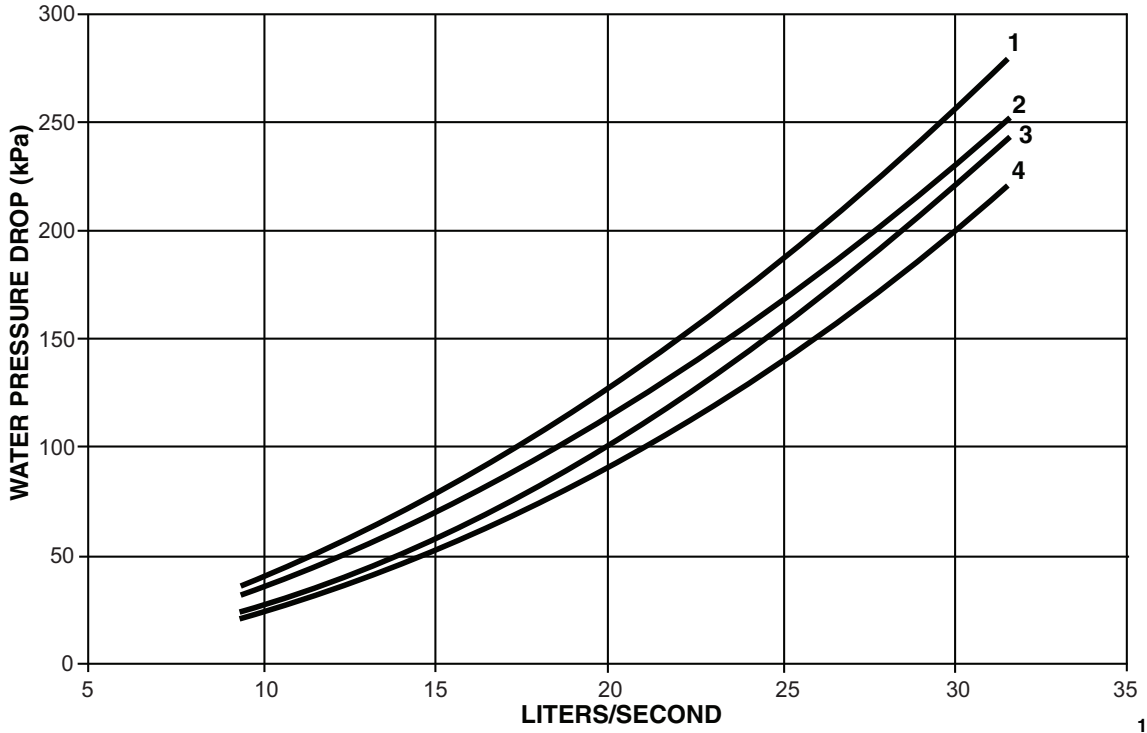


LEGEND
**1** — 30RAP100
**2** — 30RAP115
**3** — 30RAP130
**4** — 30RAP150

## UNIT PRESSURE DROP — DUAL PUMP HYDRONIC PACKAGE, 60 Hz ONLY — 30RAP010-030 (ENGLISH)

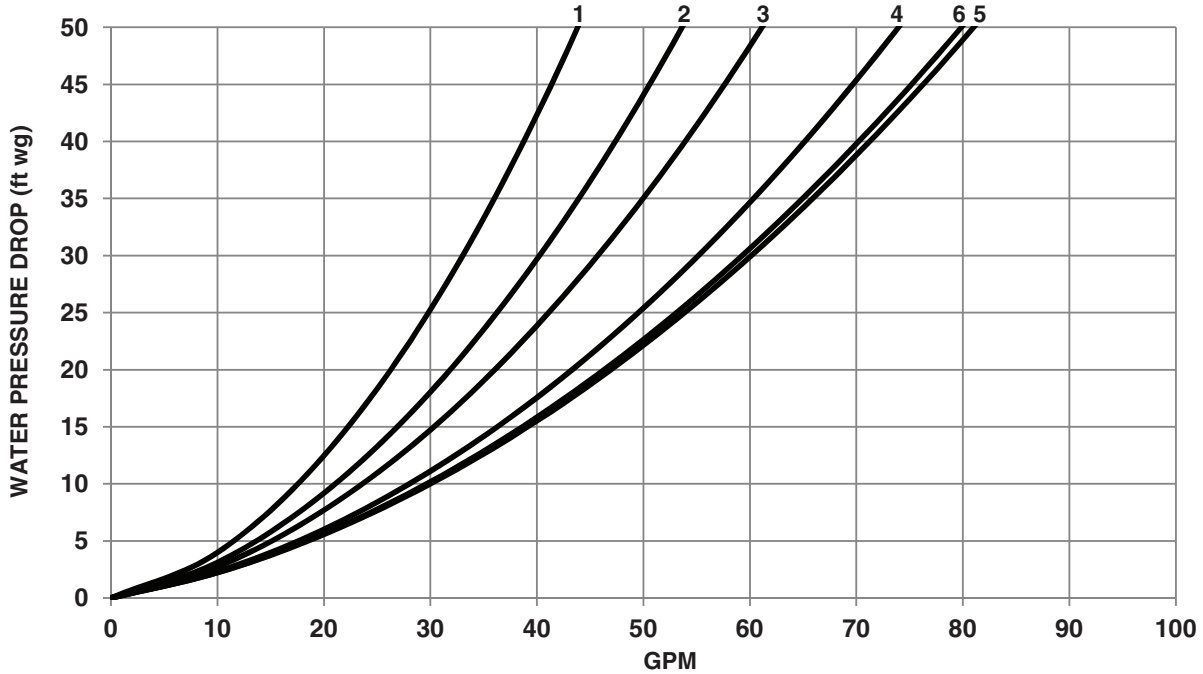


LEGEND

**1** — 30RAP010,011 **4** — 30RAP020
**2** — 30RAP015 **5** — 30RAP025
**3** — 30RAP016,018 **6** — 30RAP030

## UNIT PRESSURE DROP — DUAL PUMP HYDRONIC PACKAGE, 60 Hz ONLY — 30RAP035-060 (ENGLISH)

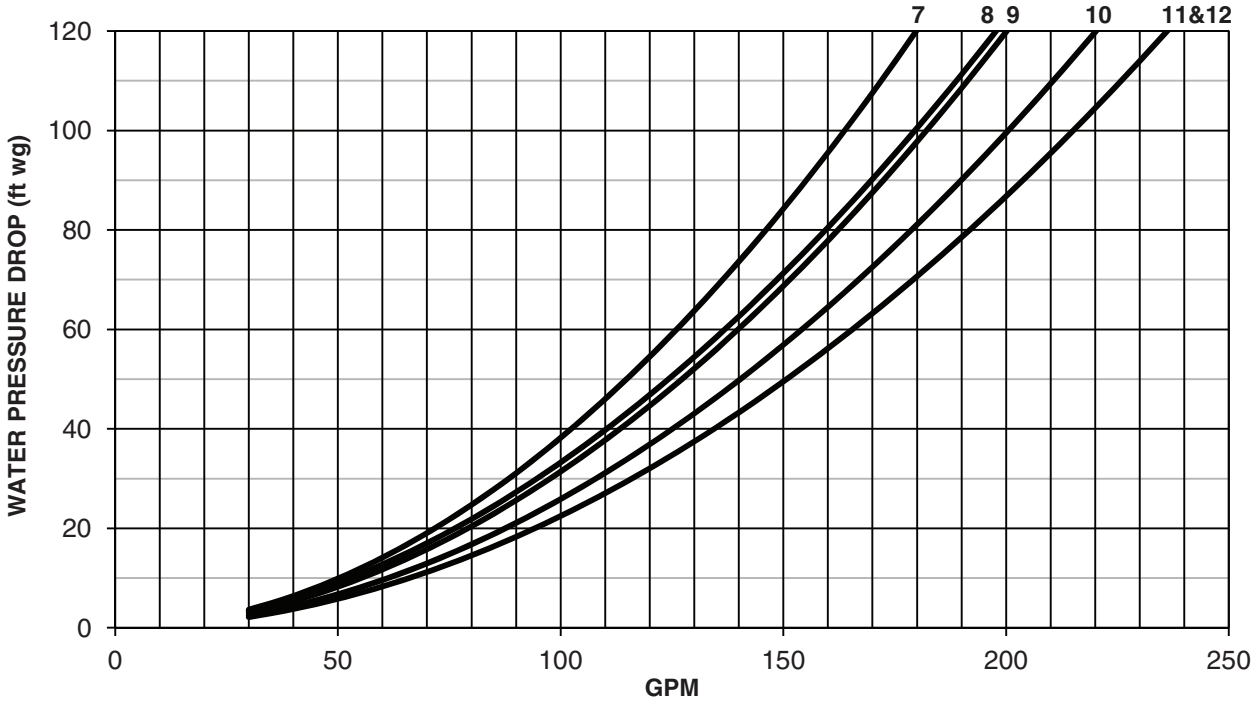


LEGEND

**7** — 30RAP035 **10** — 30RAP050
**8** — 30RAP040 **11** — 30RAP055
**9** — 30RAP045 **12** — 30RAP060

**UNIT PRESSURE DROP — DUAL PUMP HYDRONIC PACKAGE, 60 Hz ONLY — 30RAP070-090 (ENGLISH)**

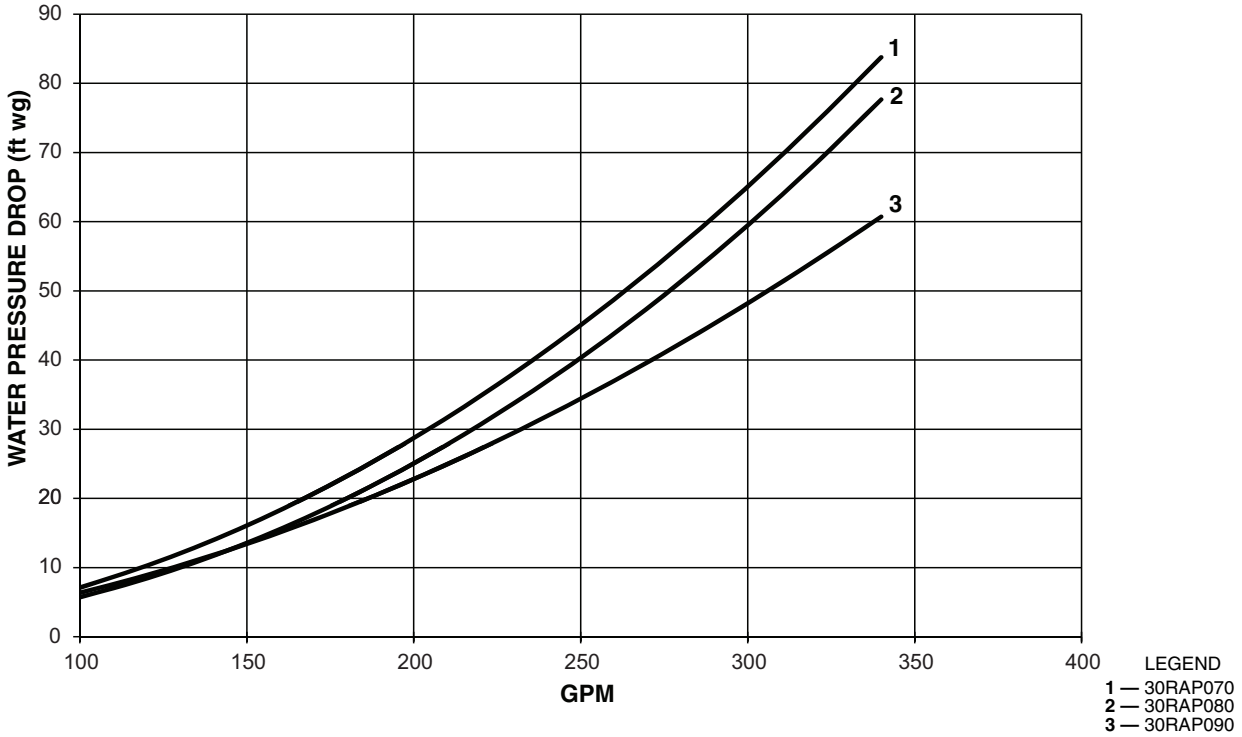


**UNIT PRESSURE DROP — DUAL PUMP HYDRONIC PACKAGE, 60 Hz ONLY — 30RAP100-150 (ENGLISH)**

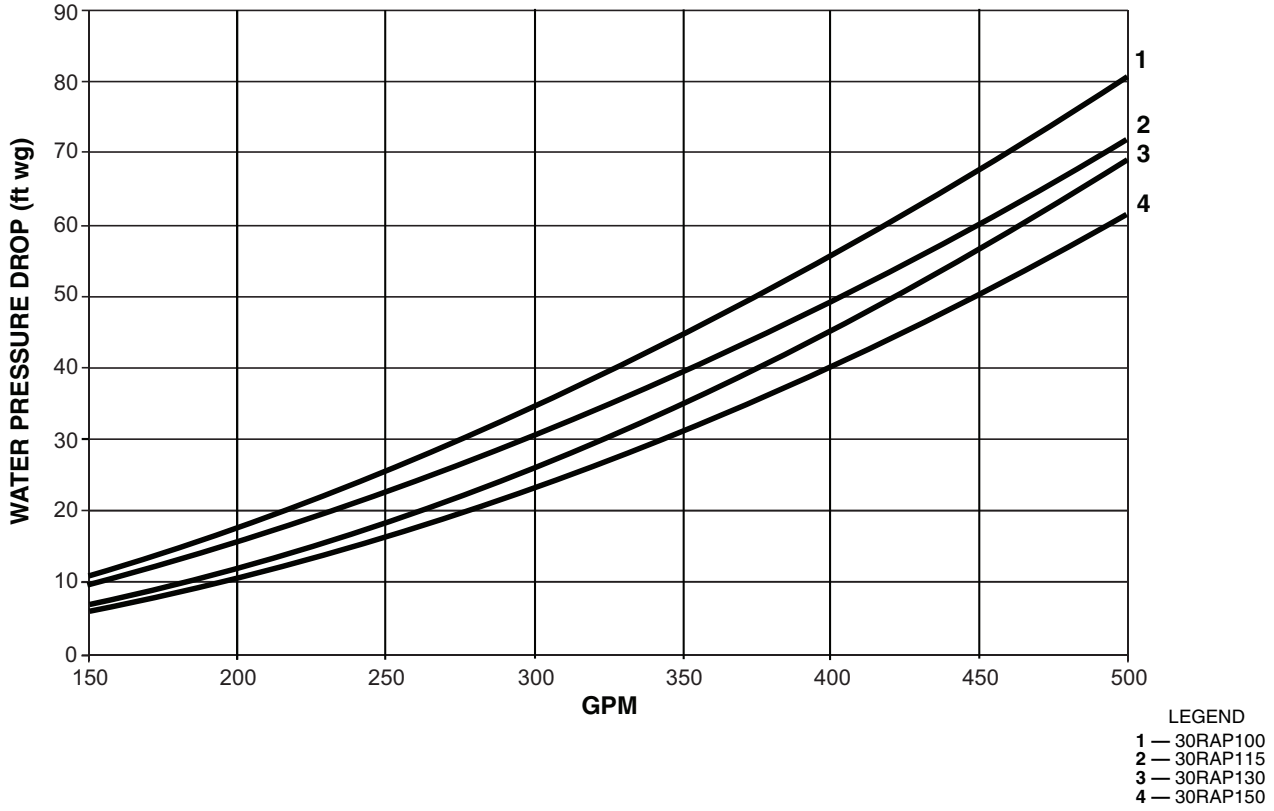

## UNIT PRESSURE DROP — DUAL PUMP HYDRONIC PACKAGE, 60 Hz ONLY — 30RAP010-030 (SI)

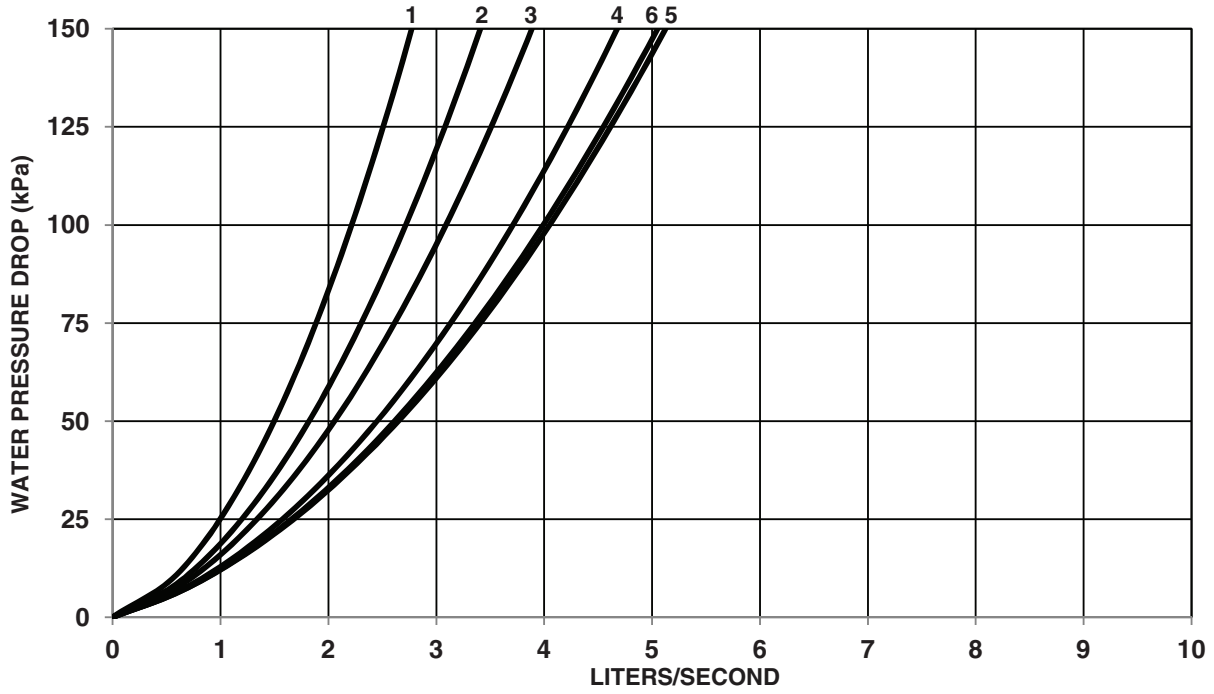


LEGEND

**1** — 30RAP010,011 **4** — 30RAP020
**2** — 30RAP015 **5** — 30RAP025
**3** — 30RAP016,018 **6** — 30RAP030

## UNIT PRESSURE DROP — DUAL PUMP HYDRONIC PACKAGE, 60 Hz ONLY — 30RAP035-060 (SI)

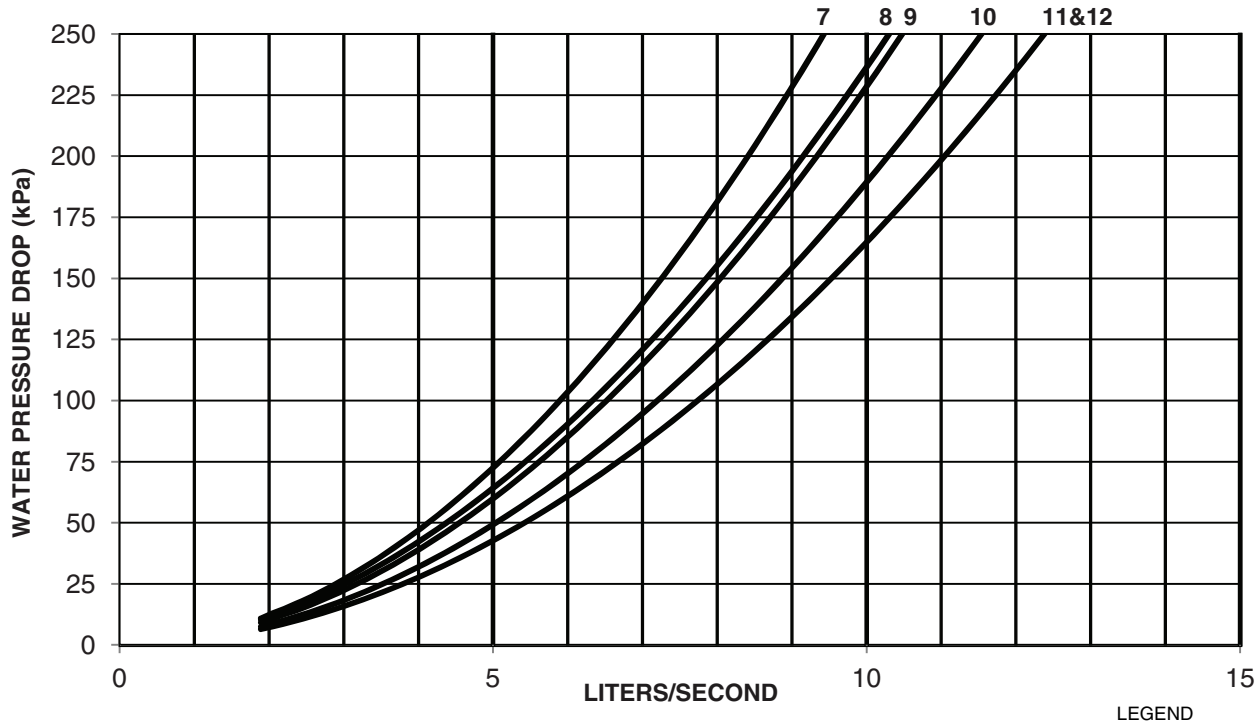


LEGEND

**7** — 30RAP035 **10** — 30RAP050
**8** — 30RAP040 **11** — 30RAP055
**9** — 30RAP045 **12** — 30RAP060

**UNIT PRESSURE DROP — DUAL PUMP HYDRONIC PACKAGE, 60 Hz ONLY — 30RAP070-090 (SI)**

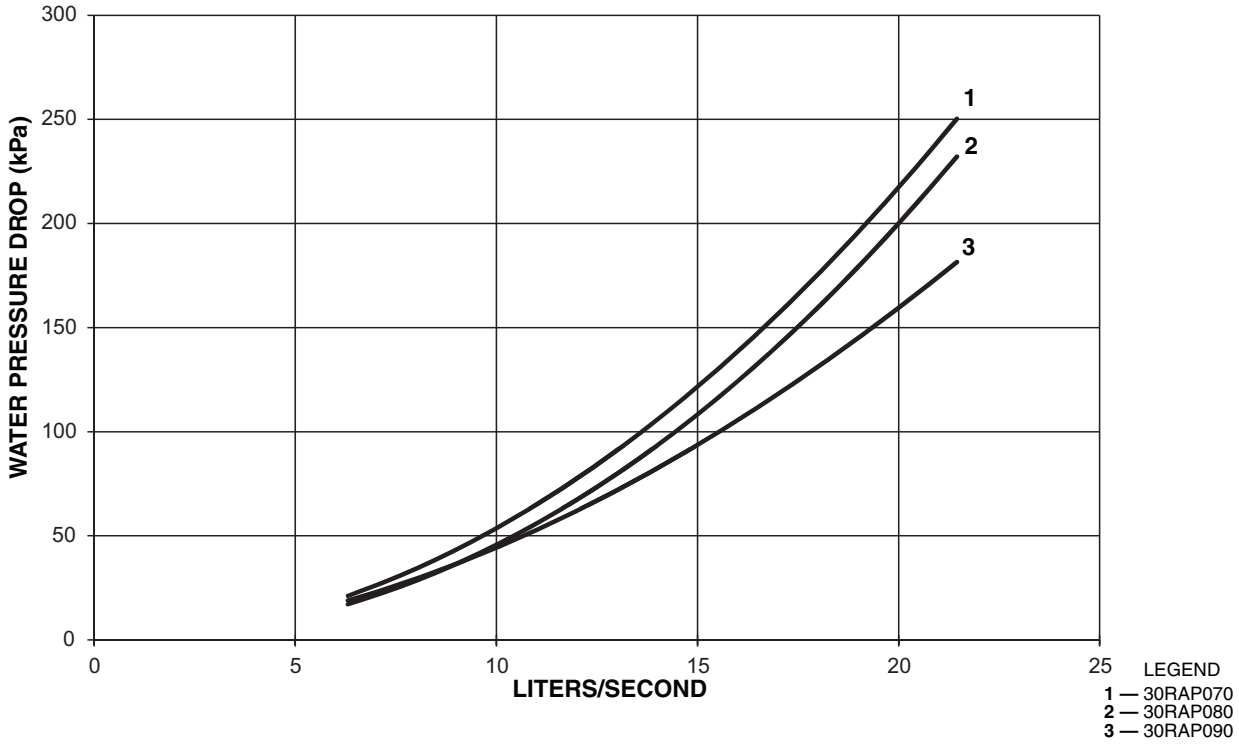


**UNIT PRESSURE DROP — DUAL PUMP HYDRONIC PACKAGE, 60 Hz ONLY — 30RAP100-150 (SI)**

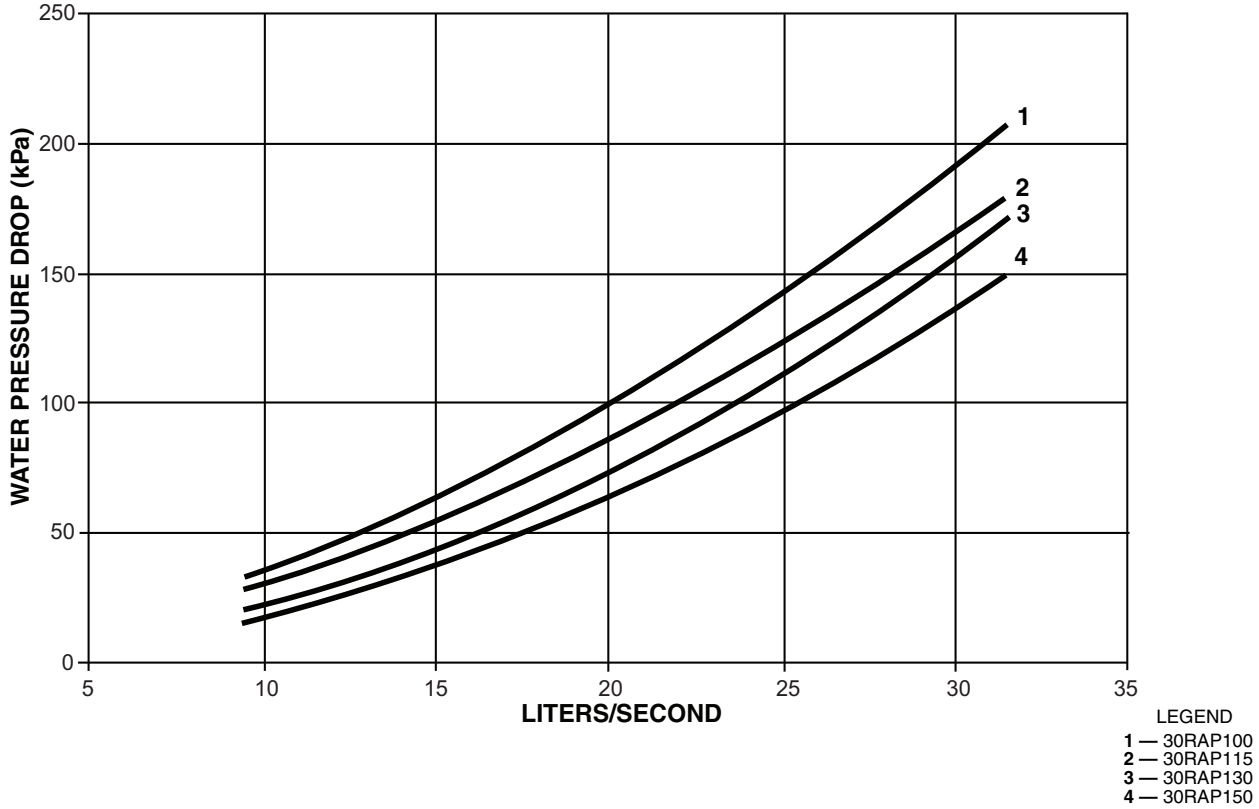

**PUMP CURVE I FOR HYDRONIC PACKAGE, 60 Hz ONLY — SINGLE PUMP 1.5 Hp, DUAL PUMP 1.5 Hp, SINGLE PUMP 3.0 Hp, DUAL PUMP 3.0 Hp, SINGLE PUMP HIGH HEAD 3.0 Hp, DUAL PUMP HIGH HEAD 3.0 Hp — 30RAP010-060 UNITS**

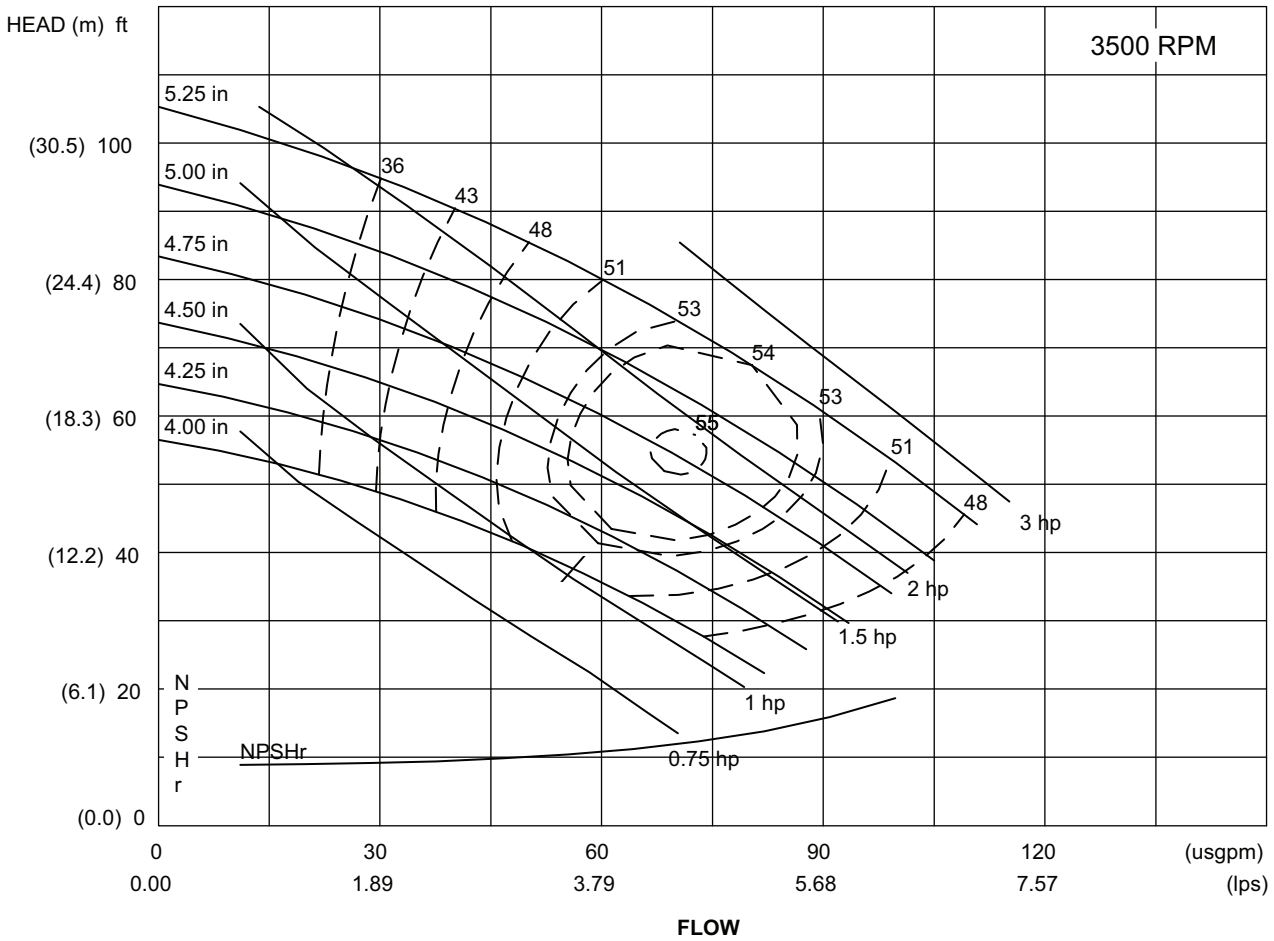


water, specific gravity = 1.00

LEGEND

**NPSHr —** Net Pump Suction Head Required

NOTE: Refer to the Pump Impeller Sizes chart on page 34 for proper unit size matching as well as the determination of the impeller diameter.

**PUMP CURVE II FOR HYDRONIC PACKAGE, 60 Hz ONLY — SINGLE PUMP 5.0 Hp, DUAL PUMP 5.0 Hp — 30RAP010-030 UNITS**

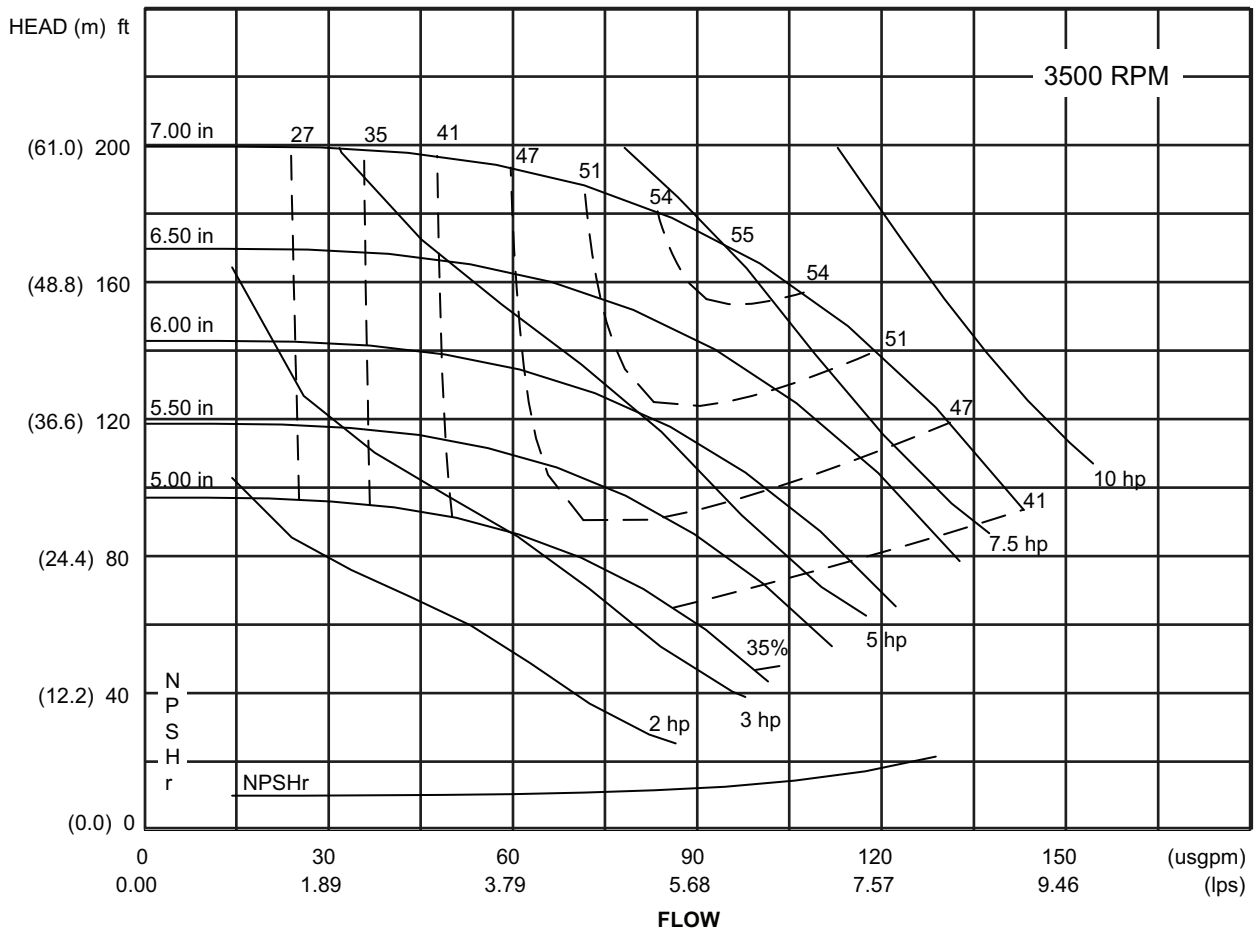


water, specific gravity = 1.00

LEGEND

**NPSHr —** Net Pump Suction Head Required

NOTE: Refer to the Pump Impeller Sizes chart on page 34 for proper unit size matching as well as the determination of the impeller diameter.

**PUMP CURVE III FOR HYDRONIC PACKAGE, 60 Hz ONLY — SINGLE PUMP 5.0 Hp, DUAL PUMP 5.0 Hp, SINGLE PUMP HIGH HEAD 5.0 Hp, DUAL PUMP HIGH HEAD 5.0 Hp — 30RAP035-060 UNITS**

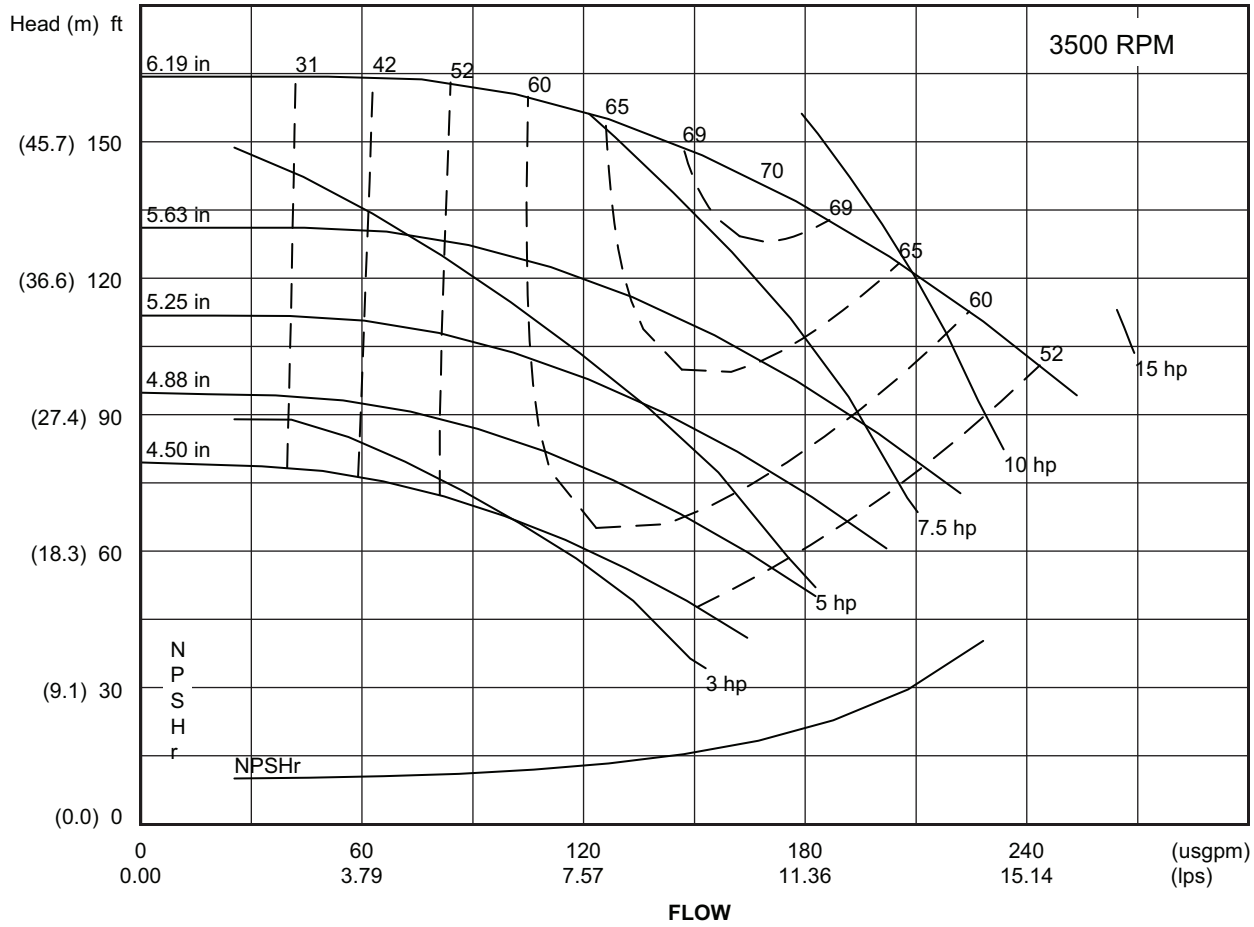


water, specific gravity = 1.00

LEGEND

**NPSHr —** Net Pump Suction Head Required

NOTE: Refer to the Pump Impeller Sizes chart on page 34 for proper unit size matching as well as the determination of the impeller diameter.

**PUMP CURVE IV FOR HYDRONIC PACKAGE, 60 Hz ONLY — SINGLE PUMP 7.5 Hp, DUAL PUMP 7.5 Hp, SINGLE PUMP 10.0 Hp, DUAL PUMP 10.0 Hp — 30RAP035-060 UNITS**

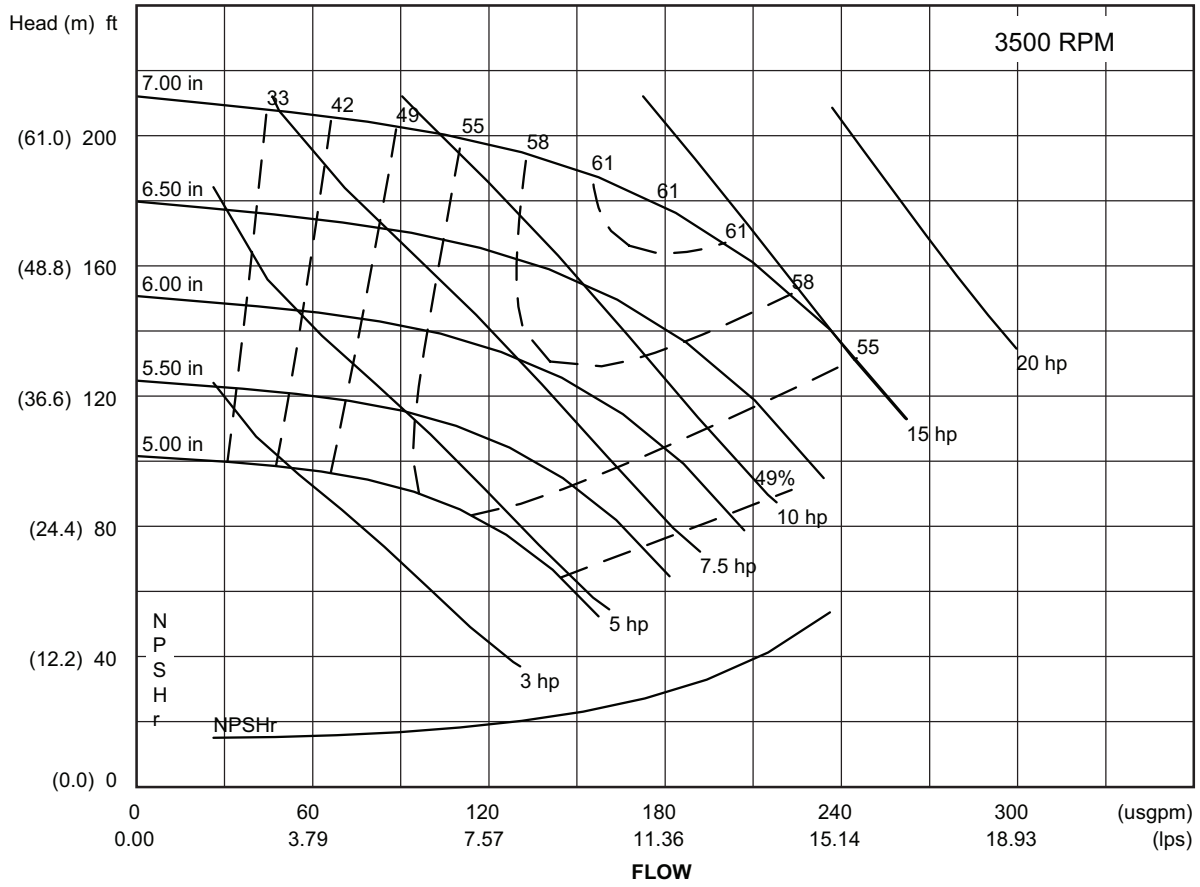


water, specific gravity = 1.00

LEGEND

**NPSHr —** Net Pump Suction Head Required

NOTE: Refer to the Pump Impeller Sizes chart on page 34 for proper unit size matching as well as the determination of the impeller diameter.

**PUMP CURVE V FOR HYDRONIC PACKAGE, 60 Hz ONLY — SINGLE PUMP 3 Hp, SINGLE PUMP 5 Hp — 30RAP070-100 UNITS**

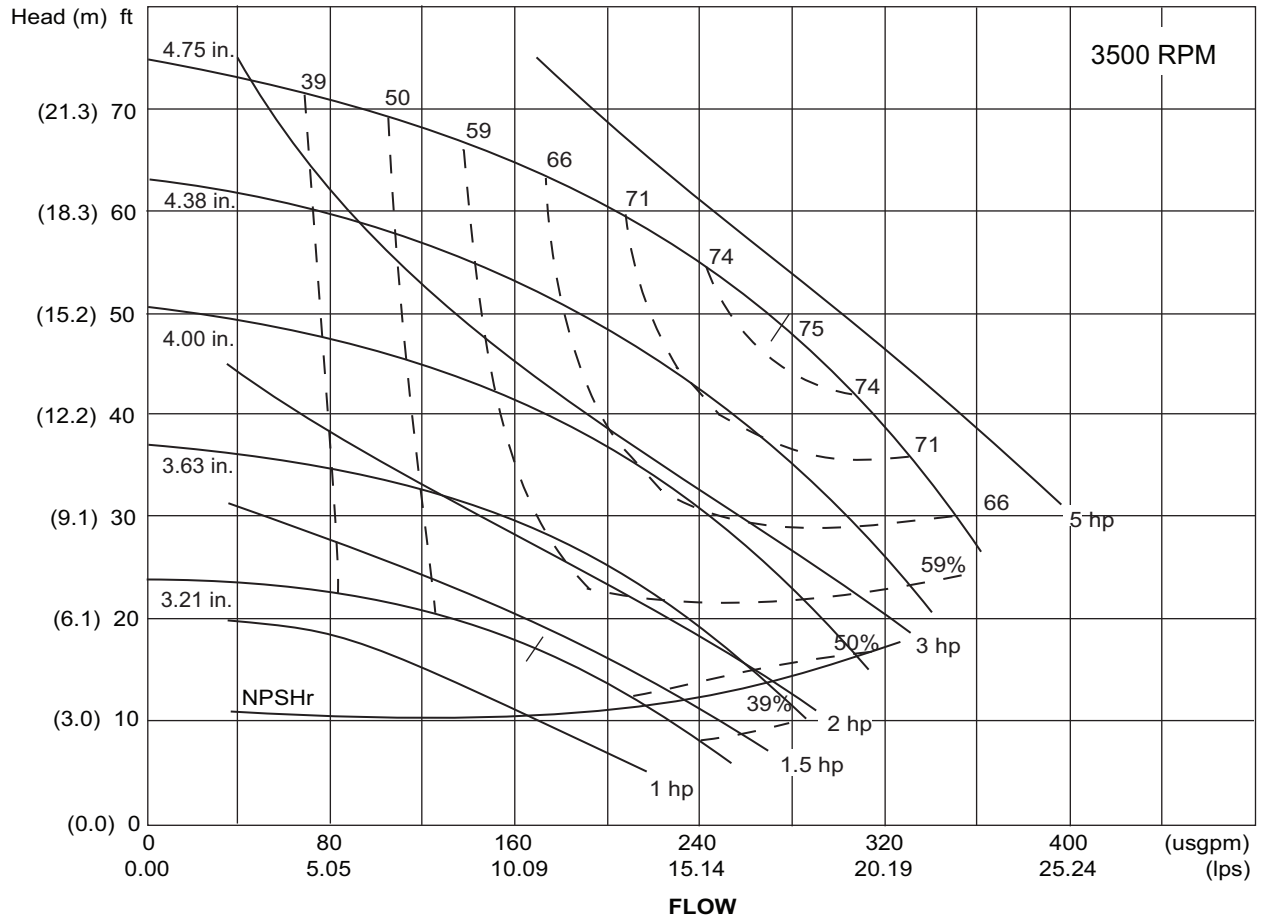


water, specific gravity = 1.00

LEGEND

**NPSHr —** Net Pump Suction Head Required

NOTE: Refer to the Pump Impeller Sizes chart on page 34 for proper unit size matching as well as the determination of the impeller diameter.

**PUMP CURVE VI FOR HYDRONIC PACKAGE, 60 Hz ONLY — SINGLE PUMP 7.5 Hp, SINGLE PUMP 10 Hp, SINGLE PUMP 15 Hp — 30RAP070-100 UNITS**

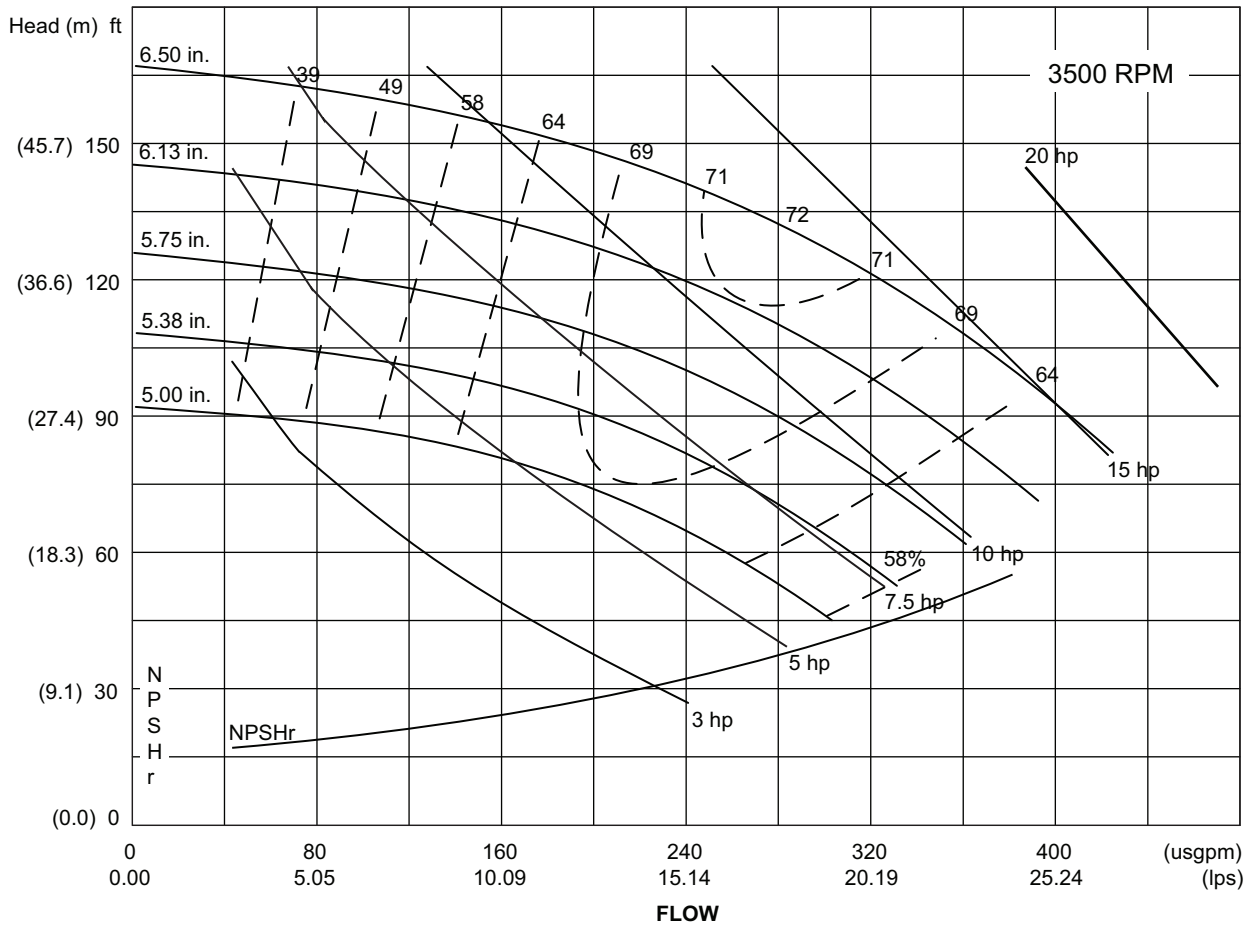


water, specific gravity = 1.00

LEGEND

**NPSHr —** Net Pump Suction Head Required

NOTE: Refer to the Pump Impeller Sizes chart on page 34 for proper unit size matching as well as the determination of the impeller diameter.

## PUMP CURVE VII FOR HYDRONIC PACKAGE, 60 Hz ONLY — DUAL PUMP 3 Hp — 30RAP070 UNITS

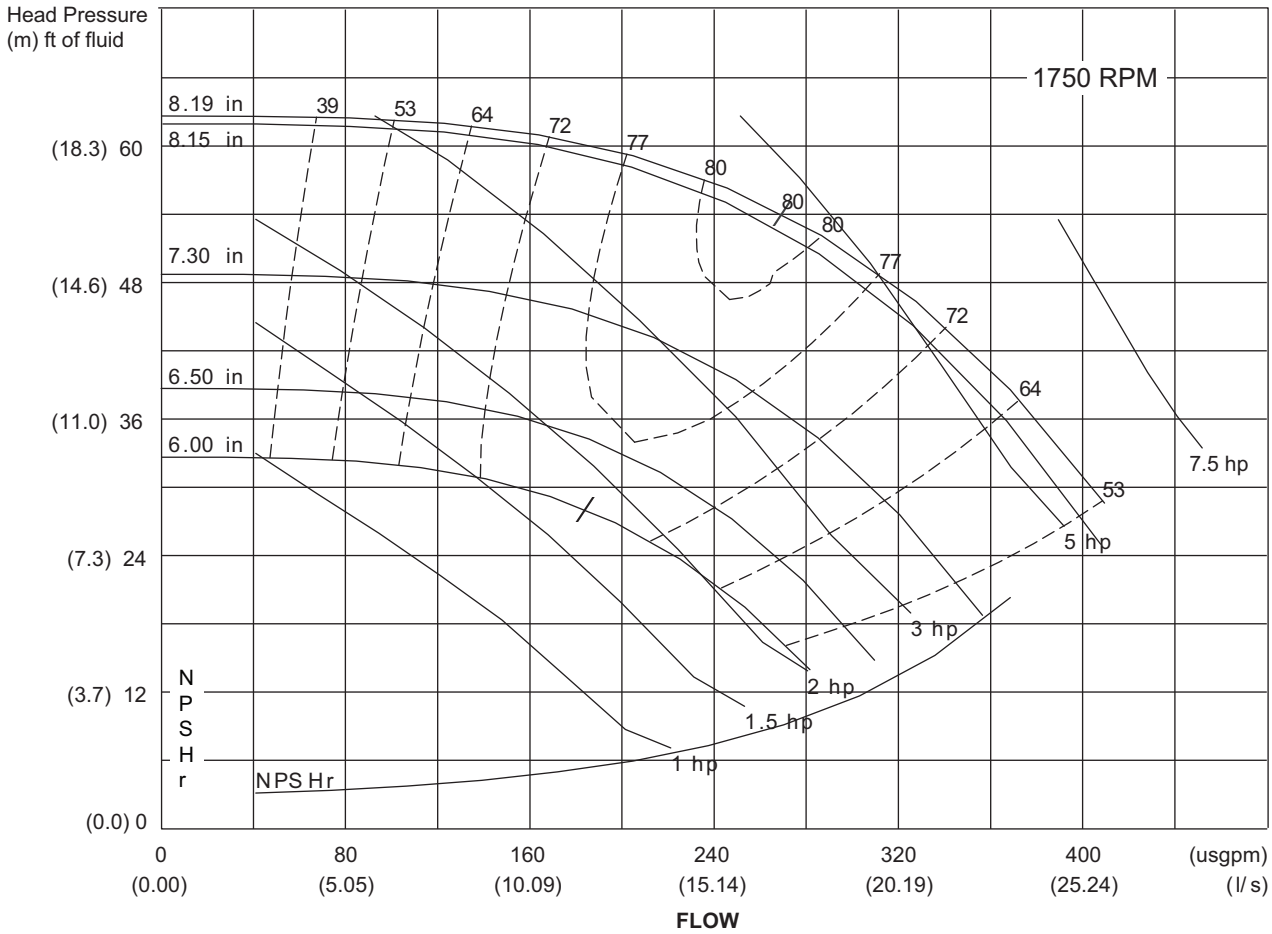


water, specific gravity = 1.00

LEGEND

**NPSHr —** Net Pump Suction Head Required

NOTE: Refer to the Pump Impeller Sizes chart on page 34 for proper unit size matching as well as the determination of the impeller diameter.

**PUMP CURVE VIII FOR HYDRONIC PACKAGE, 60 Hz ONLY — DUAL PUMP 5 Hp, DUAL PUMP 7.5 Hp, DUAL PUMP 10 Hp, DUAL PUMP 15 Hp — 30RAP070-150 UNITS**

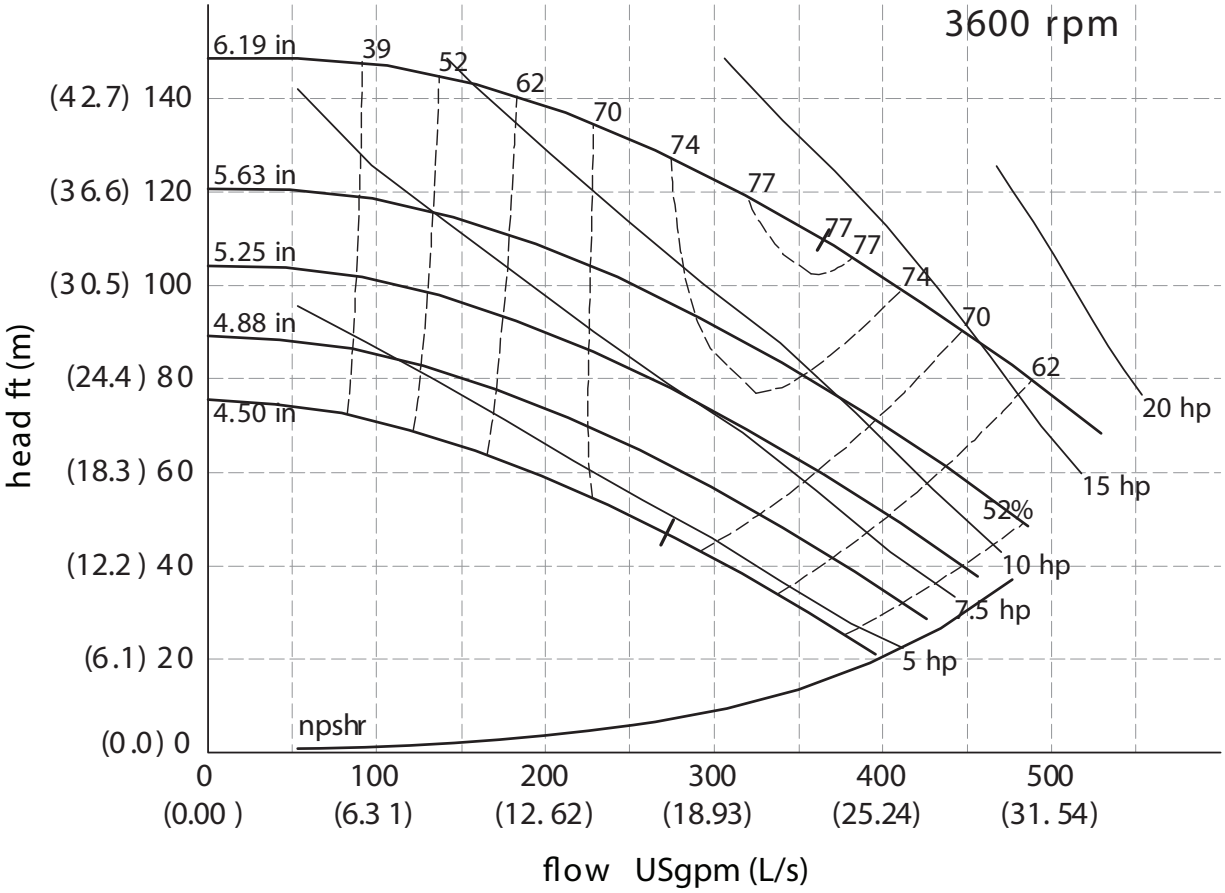


water, specific gravity = 1.00

LEGEND

**NPSHr —** Net Pump Suction Head Required

NOTE: Refer to the Pump Impeller Sizes chart on page 34 for proper unit size matching as well as the determination of the impeller diameter.

## PUMP CURVE IX FOR HYDRONIC PACKAGE, 60 Hz ONLY — DUAL PUMP 7.5 Hp, DUAL PUMP 10 Hp — 30RAP070 UNITS

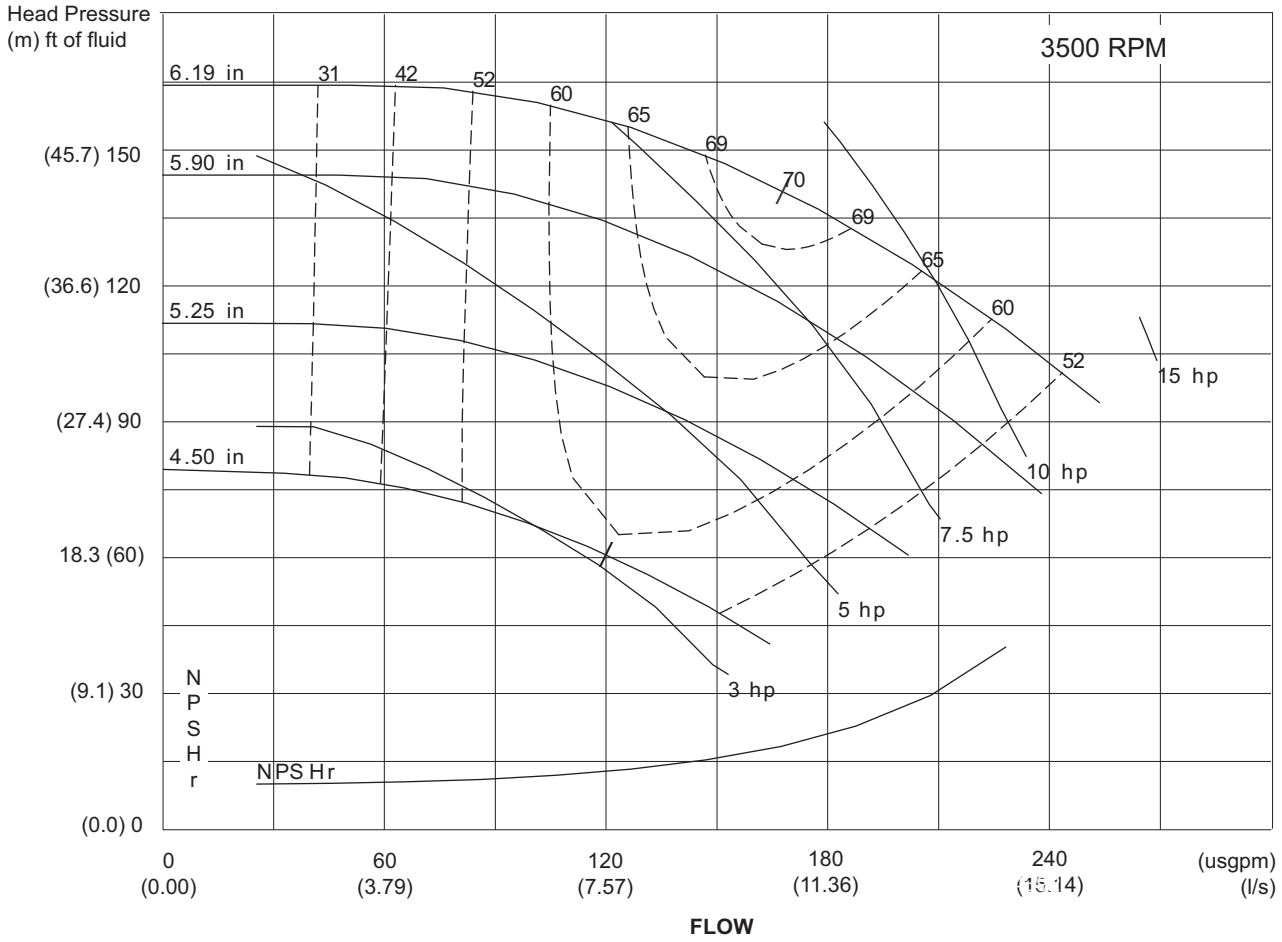


water, specific gravity = 1.00

LEGEND

**NPSHr —** Net Pump Suction Head Required

NOTE: Refer to the Pump Impeller Sizes chart on page 34 for proper unit size matching as well as the determination of the impeller diameter.

**PUMP CURVE X FOR HYDRONIC PACKAGE, 60 Hz ONLY — SINGLE PUMP 5 HP, SINGLE PUMP 7.5 HP, SINGLE PUMP 10 HP, SINGLE PUMP 15 HP — 30RAP115,130 UNITS**

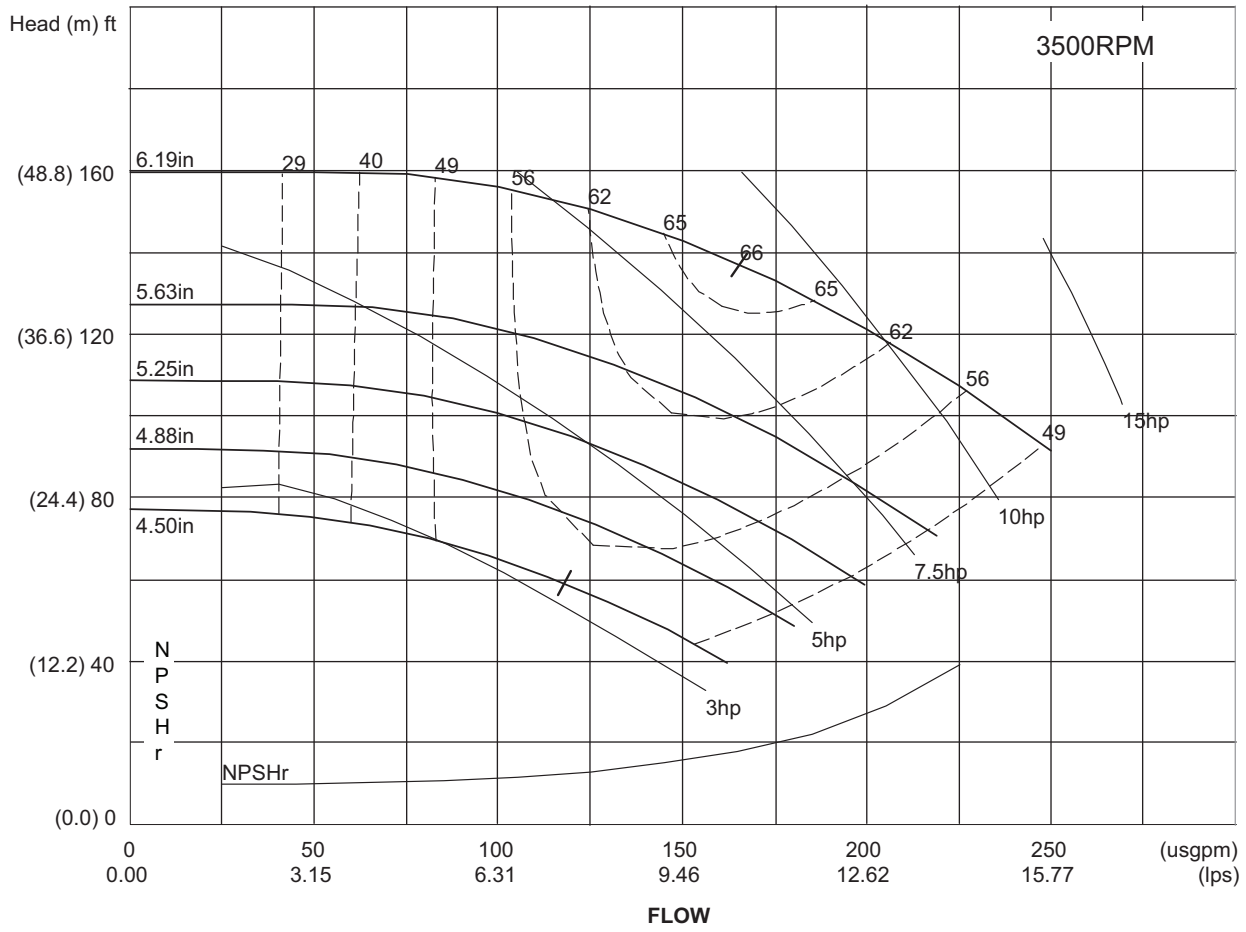


water, specific gravity = 1.00

LEGEND

**NPSHr —** Net Pump Suction Head Required

NOTE: Refer to the Pump Impeller Sizes chart on page 34 for proper unit size matching as well as the determination of the impeller diameter.

## PUMP CURVE XI FOR HYDRONIC PACKAGE, 60 Hz ONLY — SINGLE PUMP 5 HP, SINGLE PUMP 7.5 HP — 30RAP150 UNIT

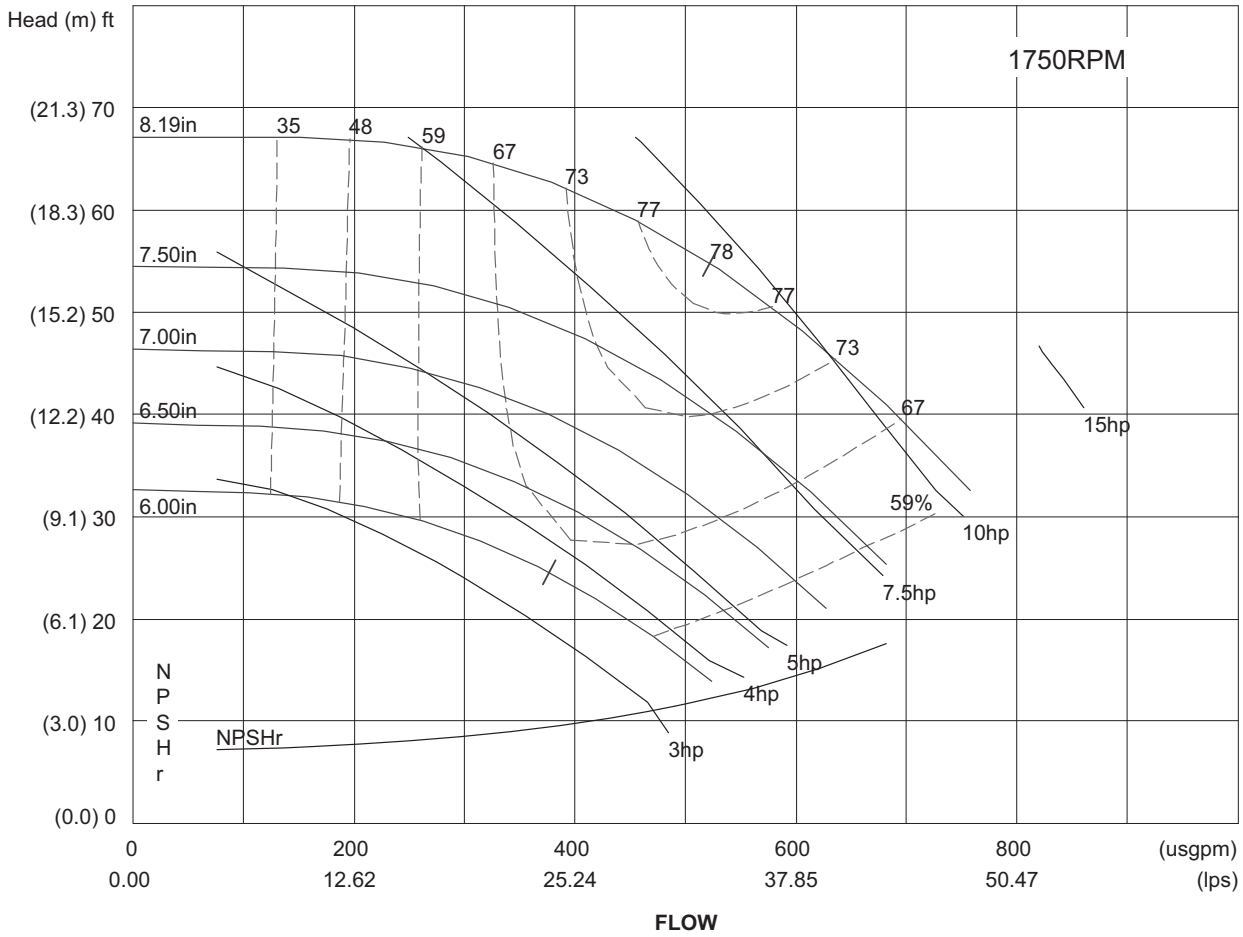


water, specific gravity = 1.00

LEGEND

**NPSHr —** Net Pump Suction Head Required

NOTE: Refer to the Pump Impeller Sizes chart on page 34 for proper unit size matching as well as the determination of the impeller diameter.

**PUMP CURVE XII FOR HYDRONIC PACKAGE, 60 Hz ONLY — SINGLE PUMP 10 HP, SINGLE PUMP 15 HP — 30RAP150 UNIT**

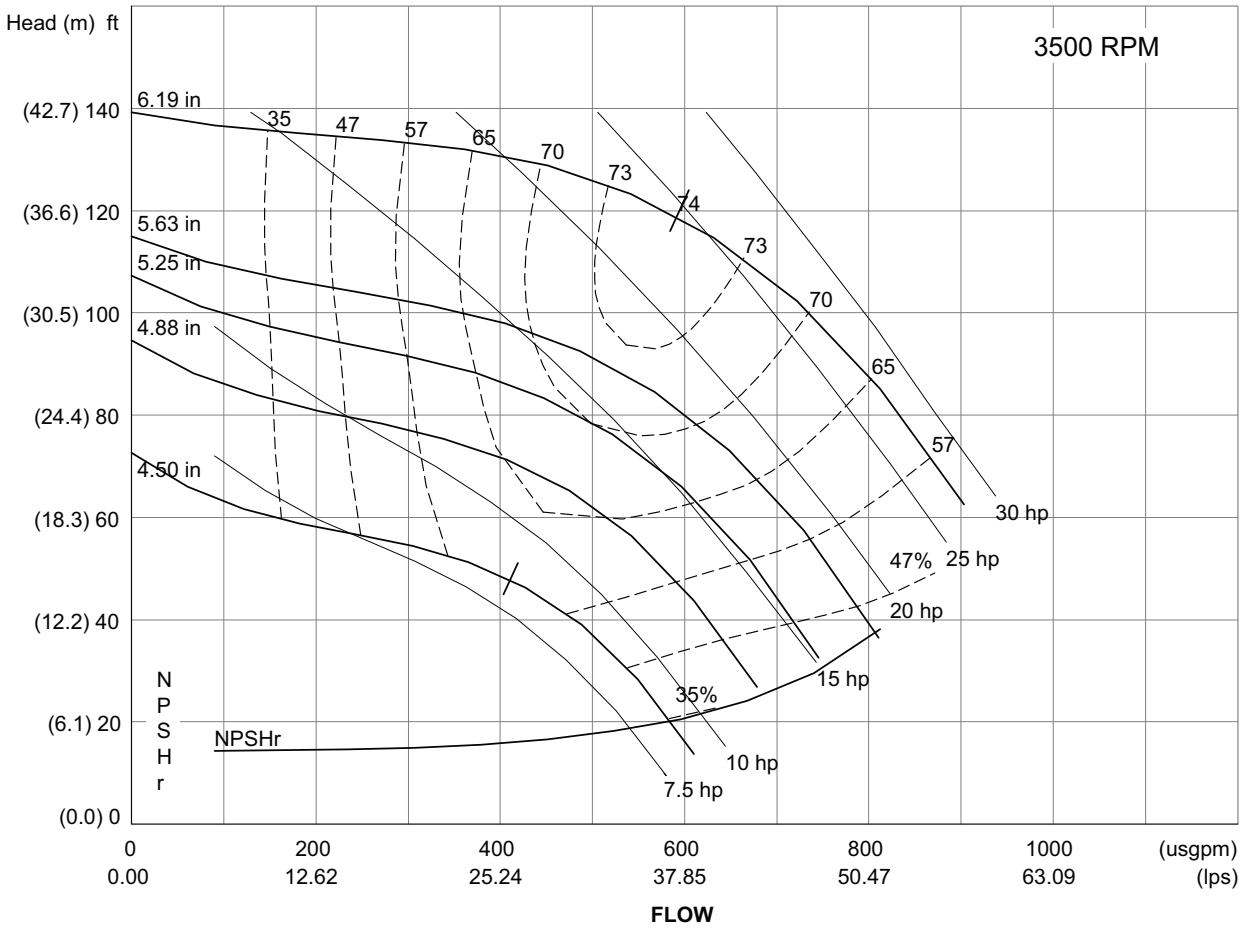


water, specific gravity = 1.00

LEGEND

**NPSHr —** Net Pump Suction Head Required

NOTE: Refer to the Pump Impeller Sizes chart on page 34 for proper unit size matching as well as the determination of the impeller diameter.

## STORAGE TANK PRESSURE DROP CURVES

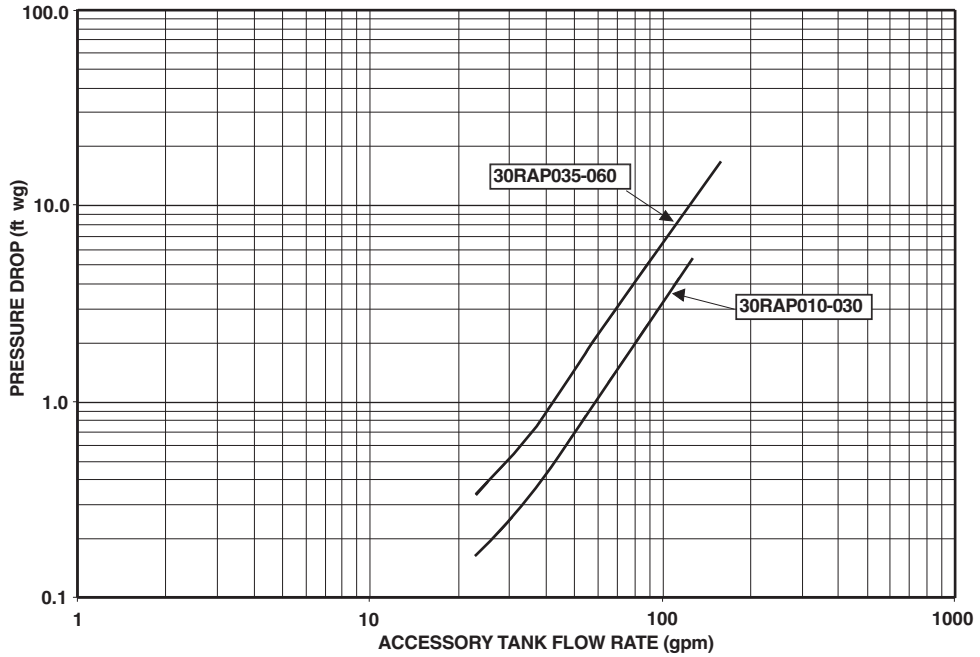


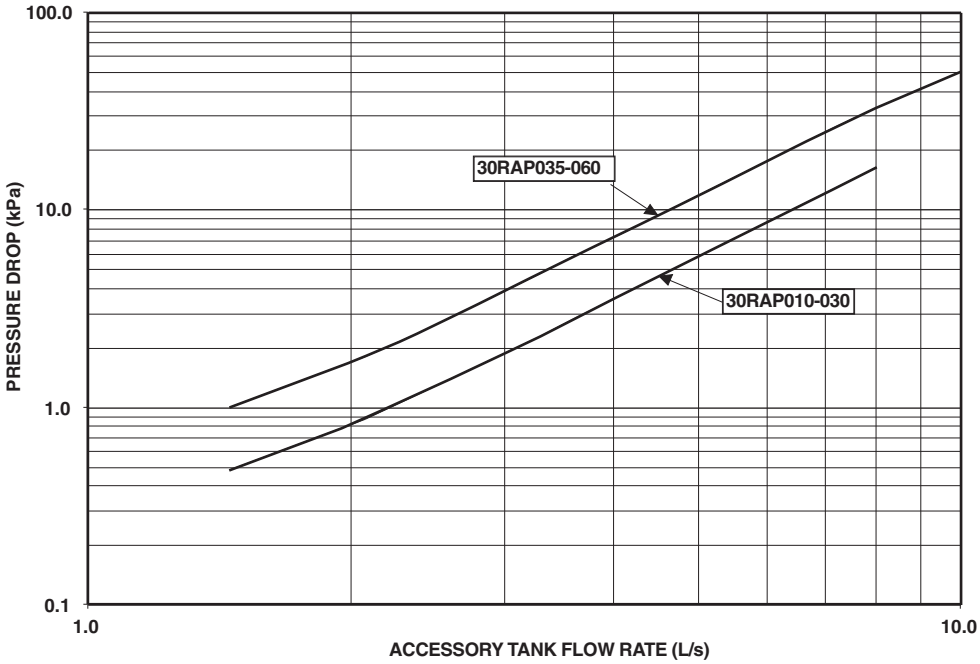

# Typical piping and wiring

## 30RAP UNITS WITHOUT HYDRONIC PACKAGE (SIZE 030 SHOWN)

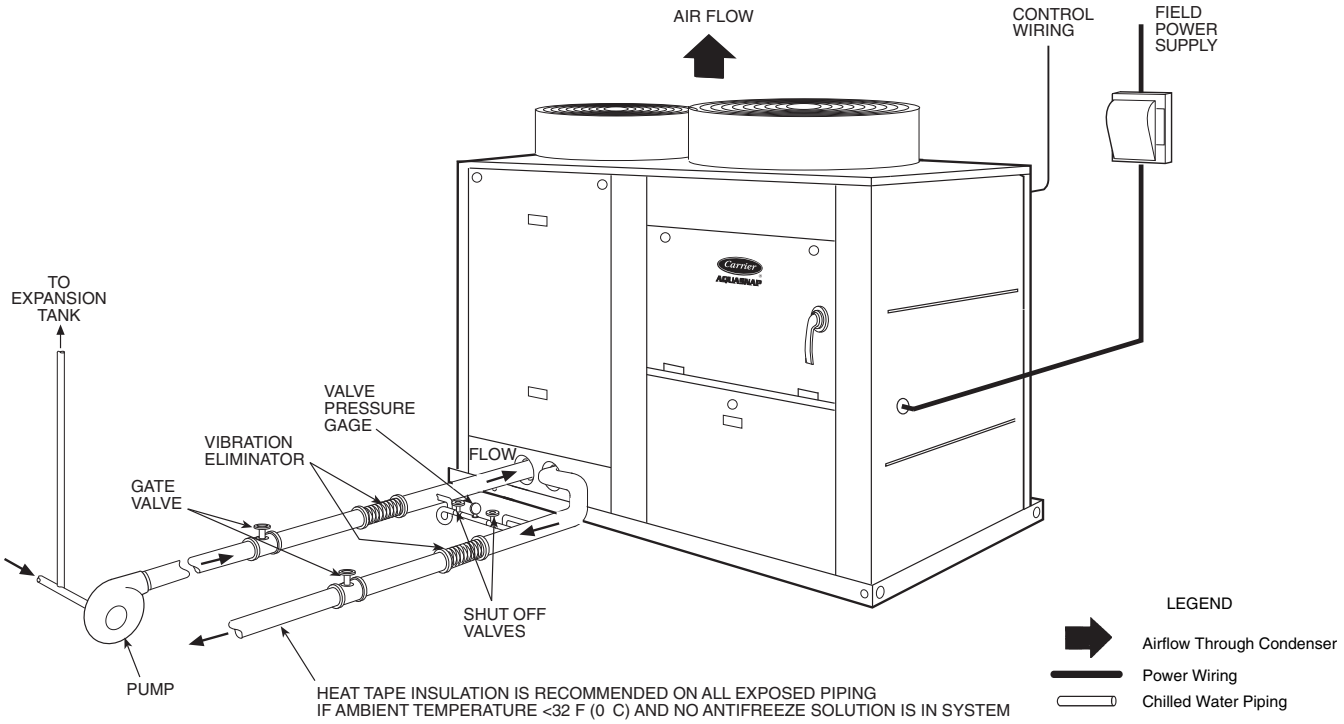


NOTES:
1. Chiller must be installed level to within 1/8 in. per foot (10.4 mm per meter) to maintain proper compressor oil return and hydraulics.
2. Wiring and piping shown are general points-of-connection guides only and are not intended for a specific installation. Wiring and piping shown are for a quick overview of system and are not in accordance with recognized standards.
3. All wiring must comply with applicable local and national codes.
4. All piping must follow standard piping techniques. Refer to Carrier System Design Manual or appropriate ASHRAE (American Society of Heating, Refrigerating, and Air-Conditioning Engineers) handbook for details.

## 30RAP UNITS WITH HYDRONIC PACKAGE (SIZE 030 SHOWN)

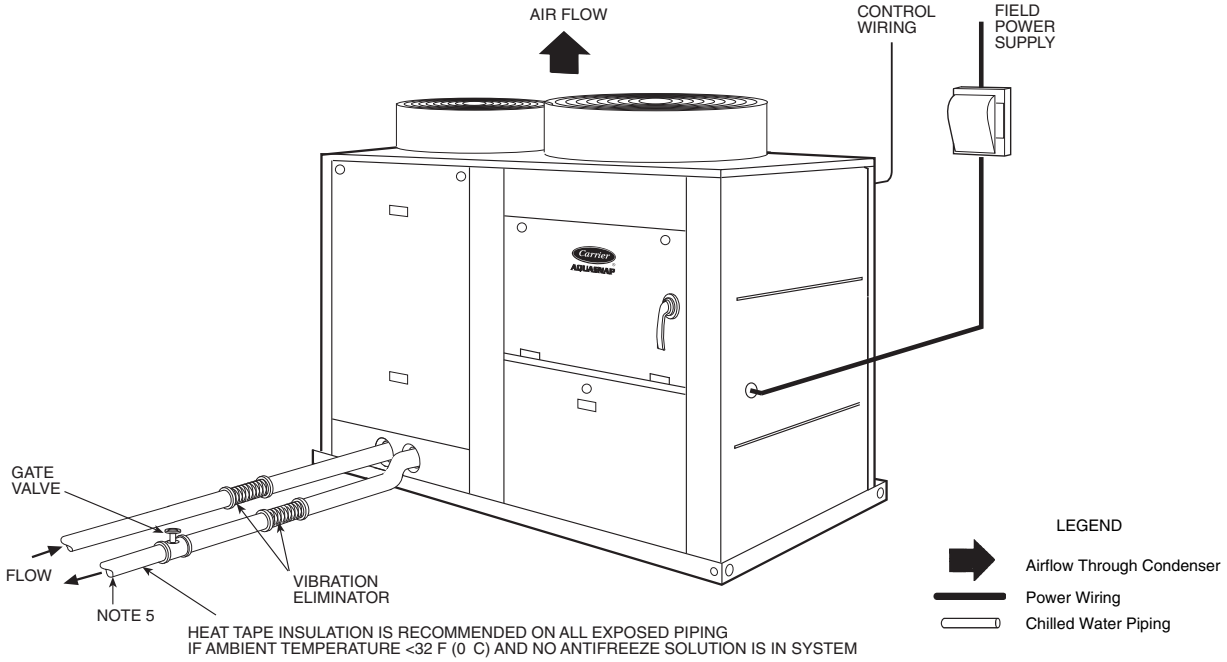


NOTES:
1. Chiller must be installed level to within 1/8 in. per foot (10.4 mm per meter) to maintain proper compressor oil return and hydraulics.
2. Wiring and piping shown are general points-of-connection guides only and are not intended for a specific installation. Wiring and piping shown are for a quick overview of system and are not in accordance with recognized standards.
3. All wiring must comply with applicable local and national codes.
4. All piping must follow standard piping techniques. Refer to Carrier System Design Manual or appropriate ASHRAE (American Society of Heating, Refrigerating, and Air-Conditioning Engineers) handbook for details.
5. Air separator required as close to chiller as possible (except primary/secondary systems).

## 30RAP UNITS WITHOUT HYDRONIC PACKAGE (SIZE 060 SHOWN)

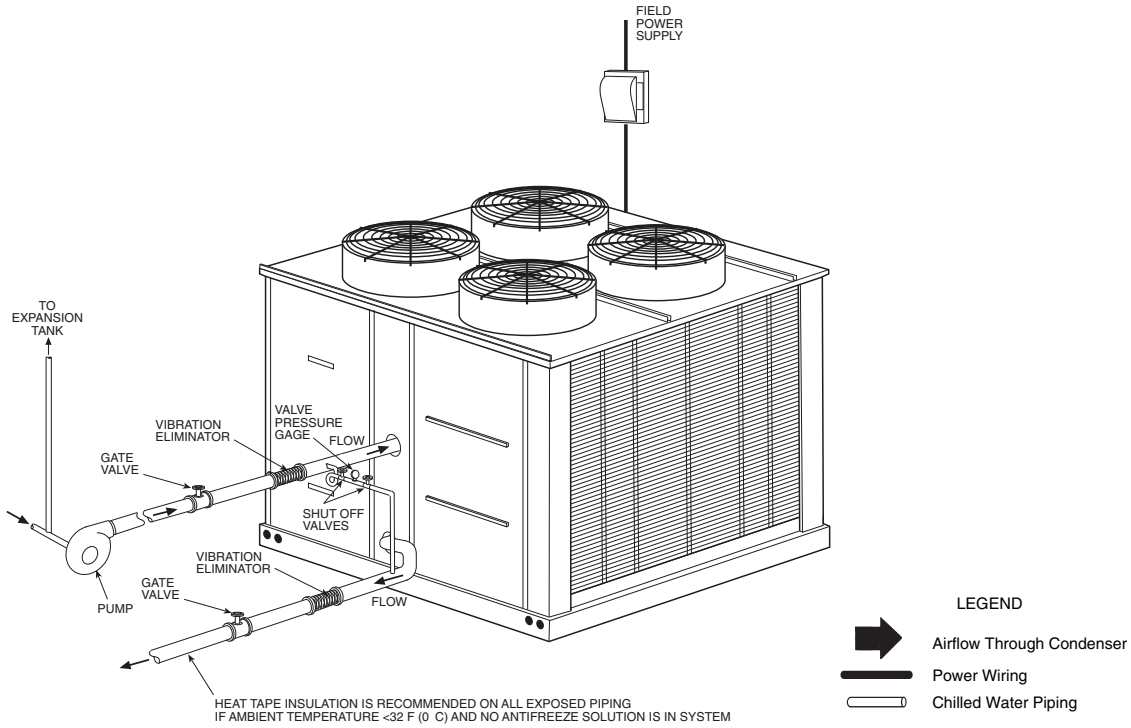


NOTES:
1. Chiller must be installed level to within 1/8 in. per foot (10.4 mm per meter) to maintain proper compressor oil return and hydraulics.
2. Wiring and piping shown are general points-of-connection guides only and are not intended for a specific installation. Wiring and piping shown are for a quick overview of system and are not in accordance with recognized standards.
3. All wiring must comply with applicable local and national codes.
4. All piping must follow standard piping techniques. Refer to Carrier System Design Manual or appropriate ASHRAE (American Society of Heating, Refrigerating, and Air-Conditioning Engineers) handbook for details.

## 30RAP UNITS WITH HYDRONIC PACKAGE (SIZE 060 SHOWN)

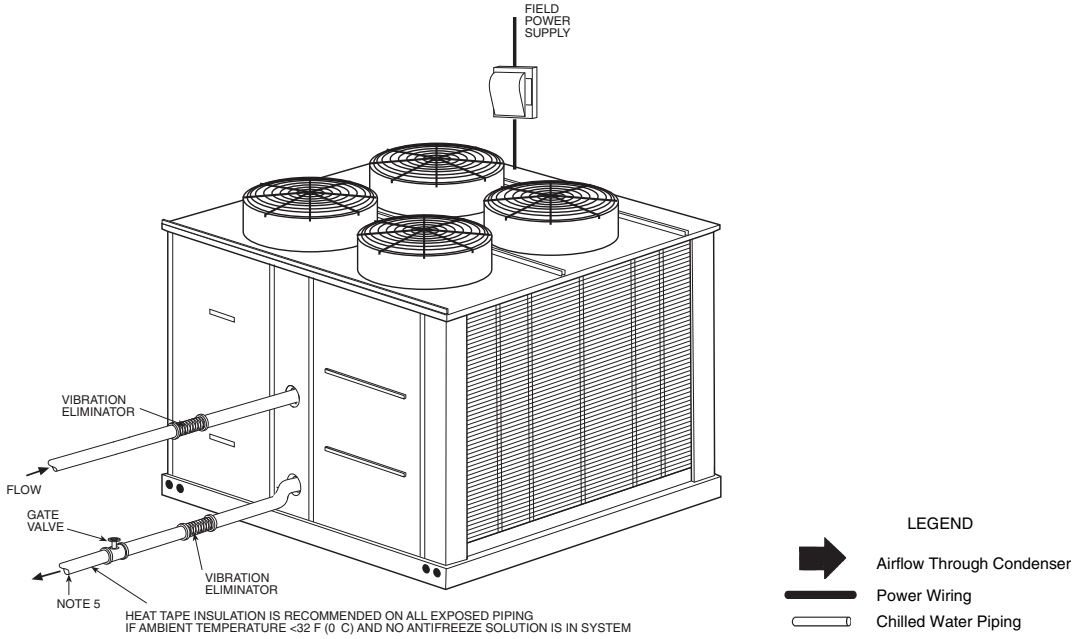


NOTES:
1. Chiller must be installed level to within 1/8 in. per foot (10.4 mm per meter) to maintain proper compressor oil return and hydraulics.
2. Wiring and piping shown are general points-of-connection guides only and are not intended for a specific installation. Wiring and piping shown are for a quick overview of system and are not in accordance with recognized standards.
3. All wiring must comply with applicable local and national codes.
4. All piping must follow standard piping techniques. Refer to Carrier System Design Manual or appropriate ASHRAE (American Society of Heating, Refrigerating, and Air-Conditioning Engineers) handbook for details.
5. Air separator required as close to chiller as possible (except primary/secondary systems).

## 30RAP UNITS WITHOUT HYDRONIC PACKAGE FOR SIZES 070 AND LARGER (SIZE 070-090 SHOWN)

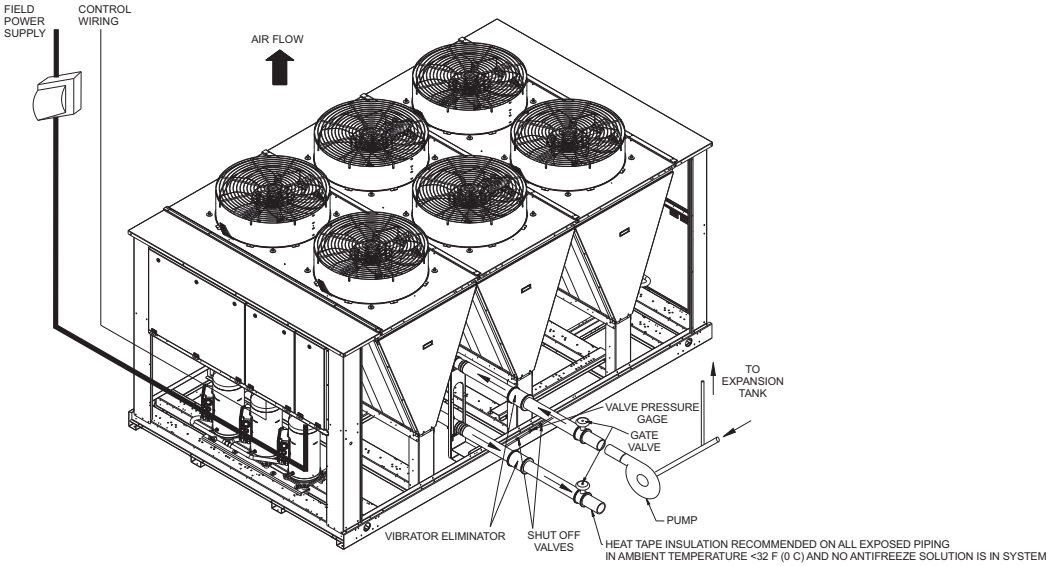


NOTES:
1. Chiller must be installed level to within 1/8 in. per foot (10.4 mm per meter) to maintain proper compressor oil return and hydraulics.
2. Wiring and piping shown are general points-of-connection guides only and are not intended for a specific installation. Wiring and piping shown are for a quick overview of system and are not in accordance with recognized standards.
3. All wiring must comply with applicable local and national codes.
4. All piping must follow standard piping techniques. Refer to Carrier System Design Manual or appropriate ASHRAE (American Society of Heating, Refrigerating, and Air-Conditioning Engineers) handbook for details.
5. Air separator required as close to chiller as possible (except primary/secondary systems).

LEGEND
- Airflow Through Condenser
- Power Wiring
- Chilled Water Piping

## 30RAP UNITS WITH HYDRONIC PACKAGE FOR SIZES 070 AND LARGER (SIZE 070-090 SHOWN)

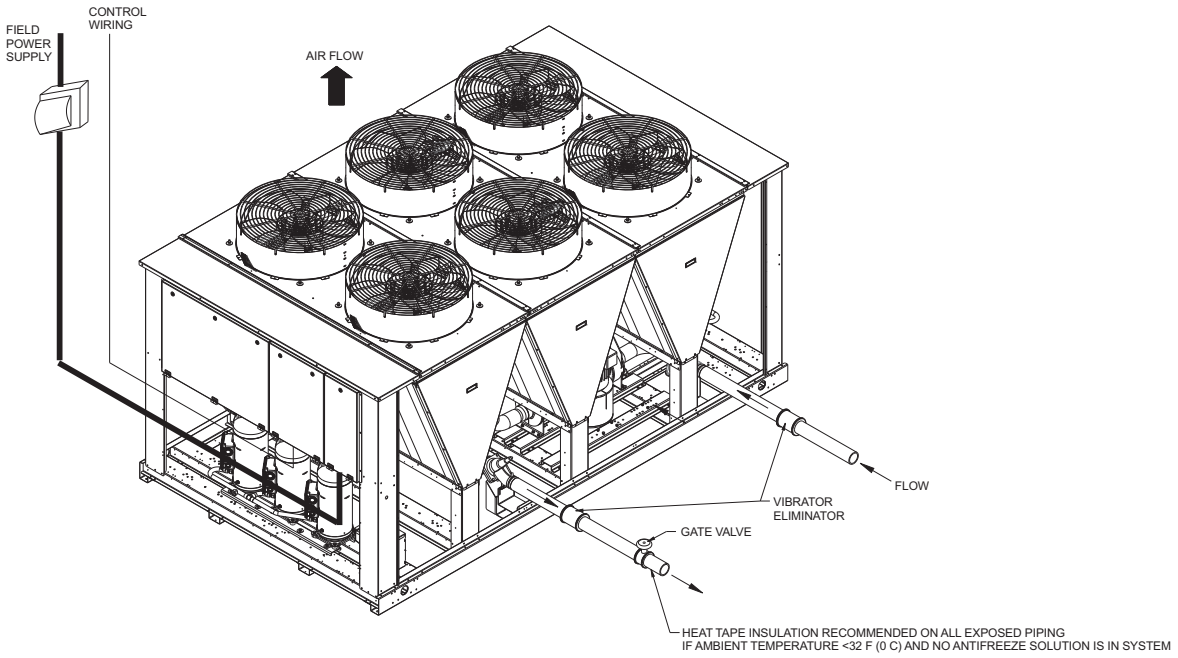


NOTES:
1. Chiller must be installed level to within 1/8 in. per foot (10.4 mm per meter) to maintain proper compressor oil return and hydraulics.
2. Wiring and piping shown are general points-of-connection guides only and are not intended for a specific installation. Wiring and piping shown are for a quick overview of system and are not in accordance with recognized standards.
3. All wiring must comply with applicable local and national codes.
4. All piping must follow standard piping techniques. Refer to Carrier System Design Manual or appropriate ASHRAE (American Society of Heating, Refrigerating, and Air-Conditioning Engineers) handbook for details.

LEGEND
- Airflow Through Condenser
- Power Wiring
- Chilled Water Piping

## TYPICAL PIPING DIAGRAM ON 30RAP UNITS WITH HYDRONIC PACKAGE

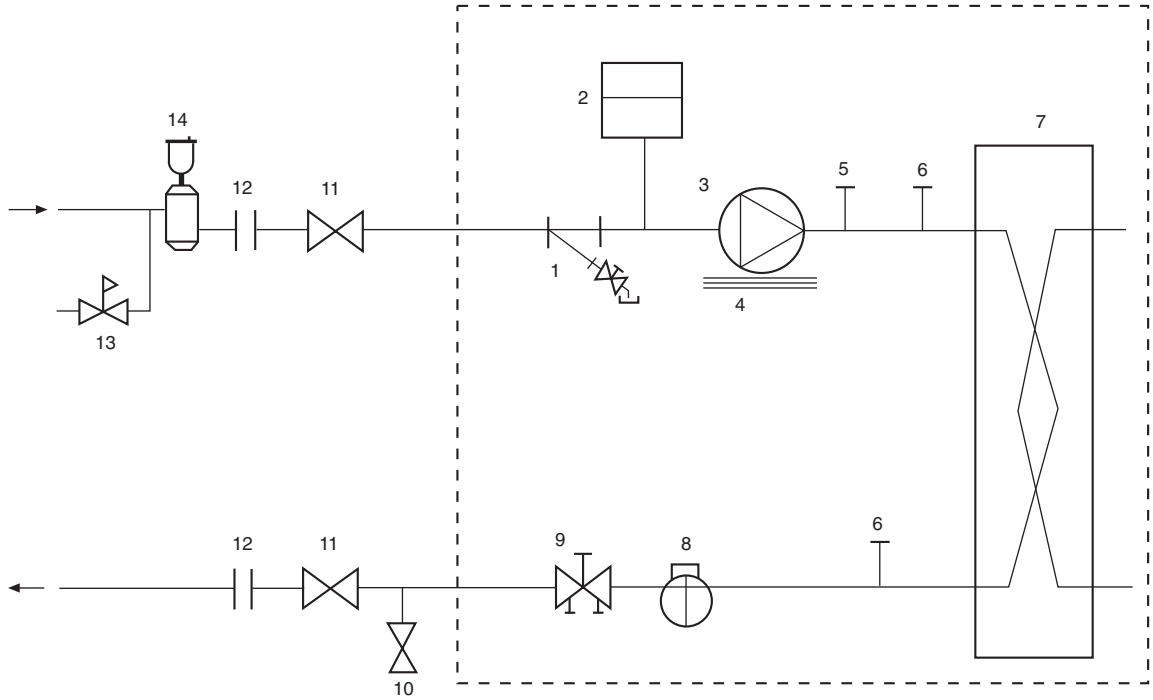


LEGEND

**1** — Strainer (40 Mesh)/Blow-Down Valve
**2** — Expansion Tank (sizes 010 - 060 only)
**3** — Pump
**4** — Electric Heater
**5** — Air Vent Connection Port
**6** — Pressure/Temperature Access Port
**7** — Heat Exchanger
**8** — Flow Switch
**9** — Balance Valve/Drain Plug
**10** — Pressure Relief
**11** — Isolation Valves
**12** — Flex Connections
**13** — Pressure Reducing/Fill Valve
**14** — Air Separator and Vent
**---** Factory Supplied

NOTE: Hydronic packages are not available for 50 Hz applications.

## 30RAP ELECTRICAL DATA
### SINGLE POINT, NO HYDRONIC PACKAGE, UNIT SIZES 010-060

| UNIT 30RAP | UNIT VOLTAGE | | | POWER SUPPLY QTY REQD. | NO HYDRONIC PACKAGE STANDARD LOW-SOUND AEROACOUSTIC™ FAN | | | | NO HYDRONIC PACKAGE OPTIONAL VALUE SOUND FANS | | | |
|---|---|---|---|---|---|---|---|---|---|---|---|---|
| | V-Hz (3 Ph) | Supplied Min | Supplied Max | | MCA | MOCP | ICF | Rec Fuse Size | MCA | MOCP | ICF | Rec Fuse Size |
| 010 | 208/230-60 | 187 | 253 | 1 | 66.1 | 110 | 251.0 | 80 | 66.7 | 110 | 251.6 | 80 |
| | 380-60 | 342 | 418 | 1 | 33.5 | 50 | 148.9 | 40 | 33.5 | 50 | 148.9 | 40 |
| | 380/415-50 | 342 | 440 | 1 | 26.2 | 40 | 127.9 | 35 | 26.6 | 45 | 128.3 | 35 |
| | 460-60 | 414 | 506 | 1 | 26.2 | 40 | 127.9 | 35 | 26.6 | 45 | 128.3 | 35 |
| | 575-60 | 518 | 633 | 1 | 20.8 | 35 | 102.4 | 25 | 21.0 | 35 | 102.6 | 25 |
| 011 | 208/230-60 | 187 | 253 | 1 | 51.0 | 70 | 186.0 | 60 | 51.6 | 70 | 186.6 | 60 |
| | 380-60 | 342 | 418 | 1 | 27.7 | 35 | 85.4 | 35 | 27.7 | 35 | 85.4 | 35 |
| | 380/415-50 | 342 | 440 | 1 | 24.7 | 35 | 85.7 | 30 | 25.1 | 35 | 86.1 | 30 |
| | 460-60 | 414 | 506 | 1 | 24.7 | 35 | 85.7 | 30 | 25.1 | 35 | 86.1 | 30 |
| | 575-60 | 518 | 633 | 1 | 18.0 | 25 | 62.1 | 20 | 18.2 | 25 | 62.3 | 20 |
| 015 | 208/230-60 | 187 | 253 | 1 | 75.8 | 125 | 346.0 | 90 | 76.4 | 125 | 346.6 | 100 |
| | 380-60 | 342 | 418 | 1 | 46.4 | 80 | 199.9 | 60 | 46.4 | 80 | 199.9 | 60 |
| | 380/415-50 | 342 | 440 | 1 | 36.5 | 60 | 181.9 | 45 | 36.9 | 60 | 182.3 | 45 |
| | 460-60 | 414 | 506 | 1 | 36.5 | 60 | 181.9 | 45 | 36.9 | 60 | 182.3 | 45 |
| | 575-60 | 518 | 633 | 1 | 32.0 | 50 | 134.4 | 40 | 32.2 | 50 | 134.6 | 40 |
| 016 | 208/230-60 | 187 | 253 | 1 | 64.5 | 90 | 269.2 | 80 | 65.1 | 90 | 269.8 | 80 |
| | 380-60 | 342 | 418 | 1 | 36.1 | 50 | 151.1 | 40 | 36.1 | 50 | 151.1 | 40 |
| | 380/415-50 | 342 | 440 | 1 | 32.5 | 45 | 144.1 | 40 | 32.9 | 45 | 144.5 | 40 |
| | 460-60 | 414 | 506 | 1 | 32.5 | 45 | 144.1 | 40 | 32.9 | 45 | 144.5 | 40 |
| | 575-60 | 518 | 633 | 1 | 24.4 | 35 | 104.0 | 30 | 24.6 | 35 | 104.2 | 30 |
| 018 | 208/230-60 | 187 | 253 | 1 | 87.2 | 110 | 270.4 | 100 | 88.4 | 110 | 271.6 | 100 |
| | 380-60 | 342 | 418 | 1 | 51.1 | 70 | 167.0 | 60 | 51.1 | 70 | 167.0 | 60 |
| | 380/415-50 | 342 | 440 | 1 | 43.4 | 60 | 136.5 | 50 | 44.2 | 60 | 137.3 | 50 |
| | 460-60 | 414 | 506 | 1 | 43.4 | 60 | 136.5 | 50 | 44.2 | 60 | 137.3 | 50 |
| | 575-60 | 518 | 633 | 1 | 34.9 | 45 | 98.2 | 40 | 35.3 | 45 | 98.6 | 40 |
| 020 | 208/230-60 | 187 | 253 | 1 | 92.6 | 125 | 286.8 | 110 | 93.8 | 125 | 288.0 | 110 |
| | 380-60 | 342 | 418 | 1 | 61.2 | 80 | 176.5 | 70 | 61.2 | 80 | 176.5 | 70 |
| | 380/415-50 | 342 | 440 | 1 | 46.1 | 60 | 148.7 | 60 | 46.9 | 60 | 149.5 | 60 |
| | 460-60 | 414 | 506 | 1 | 46.1 | 60 | 148.7 | 60 | 46.9 | 60 | 149.5 | 60 |
| | 575-60 | 518 | 633 | 1 | 37.0 | 50 | 99.1 | 45 | 37.4 | 50 | 99.5 | 45 |
| 025 | 208/230-60 | 187 | 253 | 1 | 127.4 | 175 | 363.3 | 150 | 128.6 | 175 | 364.5 | 150 |
| | 380-60 | 342 | 418 | 1 | 68.3 | 90 | 173.7 | 80 | 68.3 | 90 | 173.7 | 80 |
| | 380/415-50 | 342 | 440 | 1 | 57.8 | 80 | 178.9 | 70 | 58.6 | 80 | 179.7 | 70 |
| | 460-60 | 414 | 506 | 1 | 57.8 | 80 | 178.9 | 70 | 58.6 | 80 | 179.7 | 70 |
| | 575-60 | 518 | 633 | 1 | 49.6 | 60 | 133.7 | 60 | 50.0 | 60 | 134.1 | 60 |
| 030 | 208/230-60 | 187 | 253 | 1 | 137.6 | 175 | 407.8 | 175 | 138.8 | 175 | 409.0 | 175 |
| | 380-60 | 342 | 418 | 1 | 84.3 | 110 | 237.8 | 100 | 84.3 | 110 | 237.8 | 100 |
| | 380/415-50 | 342 | 440 | 1 | 66.3 | 90 | 211.7 | 80 | 67.1 | 90 | 212.5 | 80 |
| | 460-60 | 414 | 506 | 1 | 66.3 | 90 | 211.7 | 80 | 67.1 | 90 | 212.5 | 80 |
| | 575-60 | 518 | 633 | 1 | 58.1 | 80 | 160.5 | 70 | 58.5 | 80 | 160.9 | 70 |
| 035 | 208/230-60 | 187 | 253 | 1 | 165.4 | 200 | 359.6 | 175 | 167.2 | 200 | 361.4 | 200 |
| | 380-60 | 342 | 418 | 1 | 103.5 | 125 | 218.9 | 110 | 103.5 | 125 | 218.9 | 110 |
| | 380/415-50 | 342 | 440 | 1 | 82.4 | 100 | 185.0 | 90 | 83.6 | 100 | 186.2 | 90 |
| | 460-60 | 414 | 506 | 1 | 82.4 | 100 | 185.0 | 90 | 83.6 | 100 | 186.2 | 90 |
| | 575-60 | 518 | 633 | 1 | 66.1 | 80 | 128.2 | 70 | 66.7 | 80 | 128.8 | 80 |
| 040 | 208/230-60 | 187 | 253 | 1 | 197.8 | 225 | 395.0 | 225 | 199.6 | 225 | 396.8 | 225 |
| | 380-60 | 342 | 418 | 1 | 112.5 | 125 | 227.8 | 125 | 112.5 | 125 | 227.8 | 125 |
| | 380/415-50 | 342 | 440 | 1 | 86.4 | 100 | 188.8 | 100 | 87.6 | 100 | 190.0 | 100 |
| | 460-60 | 414 | 506 | 1 | 86.4 | 100 | 188.8 | 100 | 87.6 | 100 | 190.0 | 100 |
| | 575-60 | 518 | 633 | 1 | 68.9 | 80 | 150.9 | 80 | 69.5 | 80 | 151.5 | 80 |
| 045 | 208/230-60 | 187 | 253 | 1 | 229.6 | 250 | 468.7 | 250 | 231.4 | 250 | 470.5 | 250 |
| | 380-60 | 342 | 418 | 1 | 119.6 | 125 | 228.2 | 125 | 119.6 | 125 | 228.8 | 125 |
| | 380/415-50 | 342 | 440 | 1 | 97.9 | 110 | 223.5 | 110 | 99.1 | 110 | 224.7 | 110 |
| | 460-60 | 414 | 506 | 1 | 97.9 | 110 | 223.5 | 110 | 99.1 | 110 | 224.7 | 110 |
| | 575-60 | 518 | 633 | 1 | 81.4 | 100 | 170.7 | 90 | 82.0 | 100 | 171.3 | 90 |
| 050 | 208/230-60 | 187 | 253 | 1 | 236.0 | 250 | 471.9 | 250 | 237.8 | 250 | 473.7 | 250 |
| | 380-60 | 342 | 418 | 1 | 126.0 | 150 | 231.4 | 150 | 126.0 | 150 | 231.4 | 150 |
| | 380/415-50 | 342 | 440 | 1 | 106.9 | 125 | 228.0 | 125 | 108.1 | 125 | 229.2 | 125 |
| | 460-60 | 414 | 506 | 1 | 106.9 | 125 | 228.0 | 125 | 108.1 | 125 | 229.2 | 125 |
| | 575-60 | 518 | 633 | 1 | 91.8 | 110 | 175.9 | 100 | 92.4 | 110 | 176.5 | 100 |
| 055 | 208/230-60 | 187 | 253 | 1 | 252.2 | 300 | 526.9 | 300 | 254.6 | 300 | 529.3 | 300 |
| | 380-60 | 342 | 418 | 1 | 145.9 | 175 | 306.5 | 175 | 145.9 | 175 | 306.5 | 175 |
| | 380/415-50 | 342 | 440 | 1 | 118.3 | 125 | 267.5 | 125 | 119.9 | 125 | 269.1 | 125 |
| | 460-60 | 414 | 506 | 1 | 118.3 | 125 | 267.5 | 125 | 119.9 | 125 | 269.1 | 125 |
| | 575-60 | 518 | 633 | 1 | 102.7 | 125 | 208.9 | 110 | 103.5 | 125 | 209.7 | 110 |
| 060 | 208/230-60 | 187 | 253 | 1 | 261.2 | 300 | 531.4 | 300 | 263.6 | 300 | 533.8 | 300 |
| | 380-60 | 342 | 418 | 1 | 160.1 | 175 | 313.6 | 175 | 160.1 | 175 | 313.6 | 175 |
| | 380/415-50 | 342 | 440 | 1 | 125.9 | 150 | 271.3 | 150 | 127.5 | 150 | 272.9 | 150 |
| | 460-60 | 414 | 506 | 1 | 125.9 | 150 | 271.3 | 150 | 127.5 | 150 | 272.9 | 150 |
| | 575-60 | 518 | 633 | 1 | 110.3 | 125 | 212.7 | 125 | 111.1 | 125 | 213.5 | 125 |

LEGEND

**ICF** — Instantaneous Current Flow
**MCA** — Minimum Circuit Amps
**MOCP** — Maximum Overcurrent Protection

NOTES:
1. Units are suitable for use on electrical systems where voltage supplied to the unit terminals is not below or above the listed minimum and maximum limits. Maximum allowable phase imbalance is: voltage 2%; amps 10%.
2. All units/modules have single point primary power connection. (Each unit/module requires its own power supply.) Main power must be supplied from a field-supplied disconnect.
3. Cooler heater is wired into the control circuit so it is always operable as long as the power supply disconnect and heater safety device are on.
4. Power draw control circuits include both crankcase heaters and cooler heaters (where used). Each compressor on sizes 070-090 has a crankcase heater which draws 90 watts of power at 60 Hz or 68 watts of power at 50 Hz, while each compressor on sizes 100-150 has a crankcase heater which draws 56 watts of power at 60 Hz or 42 watts of power at 50 Hz.
5. 30RAP chillers with Greenspeed® intelligence are not available on unit sizes 010, 015, and 070-150.

## 30RAP ELECTRICAL DATA (cont)

### SINGLE POINT, NO HYDRONIC PACKAGE, UNIT SIZES 070-150

| UNIT 30RAP | UNIT VOLTAGE | | | POWER SUPPLY QTY REQD. | NO HYDRONIC PACKAGE STANDARD LOW-SOUND AEROACOUSTIC™ FAN | | | | NO HYDRONIC PACKAGE OPTIONAL VALUE SOUND FANS | | | |
|---|---|---|---|---|---|---|---|---|---|---|---|---|
| | V-Hz (3 Ph) | Supplied Min | Supplied Max | | MCA | MOCP | ICF | Rec Fuse Size | MCA | MOCP | ICF | Rec Fuse Size |
| 070 | 208/230-60 | 187 | 254 | 1 | 323.0 | 350 | 593.2 | 350 | 326.0 | 350 | 596.2 | 350 |
| | 380-60 | 342 | 418 | 1 | 198.0 | 225 | 351.5 | 225 | 198.0 | 225 | 351.5 | 225 |
| | 380/415-50 | 342 | 440 | 1 | 155.7 | 175 | 301.1 | 175 | 157.7 | 175 | 303.1 | 175 |
| | 460-60 | 414 | 506 | 1 | 155.7 | 175 | 301.1 | 175 | 157.7 | 175 | 303.1 | 175 |
| | 575-60 | 518 | 633 | 1 | 136.4 | 150 | 238.8 | 150 | 137.4 | 150 | 239.8 | 150 |
| 080 | 208/230-60 | 187 | 254 | 1 | 371.3 | 400 | 641.5 | 400 | 374.9 | 400 | 645.1 | 400 |
| | 380-60 | 342 | 418 | 1 | 214.6 | 225 | 368.1 | 225 | 214.6 | 225 | 368.1 | 225 |
| | 380/415-50 | 342 | 440 | 1 | 174.1 | 200 | 319.5 | 200 | 176.5 | 200 | 321.9 | 200 |
| | 460-60 | 414 | 506 | 1 | 174.1 | 200 | 319.5 | 200 | 176.5 | 200 | 321.9 | 200 |
| | 575-60 | 518 | 633 | 1 | 151.1 | 175 | 253.5 | 175 | 152.3 | 175 | 254.7 | 175 |
| 090 | 208/230-60 | 187 | 254 | 1 | 384.8 | 400 | 655.0 | 400 | 388.4 | 400 | 658.6 | 400 |
| | 380-60 | 342 | 418 | 1 | 235.9 | 250 | 389.4 | 250 | 235.9 | 250 | 389.4 | 250 |
| | 380/415-50 | 342 | 440 | 1 | 185.5 | 200 | 330.9 | 200 | 187.9 | 200 | 333.3 | 200 |
| | 460-60 | 414 | 506 | 1 | 185.5 | 200 | 330.9 | 200 | 187.9 | 200 | 333.3 | 200 |
| | 575-60 | 518 | 633 | 1 | 162.5 | 175 | 264.9 | 175 | 163.7 | 175 | 266.1 | 175 |
| 100 | 208/230-60 | 187 | 254 | 1 | 459.8 | 500 | 902.0 | 500 | 464.0 | 500 | 906.2 | 500 |
| | 380-60 | 342 | 418 | 1 | 242.5 | 250 | 495.9 | 250 | 242.5 | 250 | 495.9 | 250 |
| | 380/415-50 | 342 | 440 | 1 | 203.1 | 225 | 411.1 | 225 | 205.9 | 225 | 413.9 | 225 |
| | 460-60 | 414 | 506 | 1 | 203.1 | 225 | 411.1 | 225 | 205.9 | 225 | 413.9 | 225 |
| | 575-60 | 518 | 633 | 1 | 164.0 | 175 | 331.6 | 175 | 165.4 | 175 | 333.0 | 175 |
| 115 | 208/230-60 | 187 | 254 | 1 | 516.8 | 600 | 908.0 | 600 | 521.6 | 600 | 912.8 | 600 |
| | 380-60 | 342 | 418 | 1 | 271.2 | 300 | 483.2 | 300 | 271.2 | 300 | 483.2 | 300 |
| | 380/415-50 | 342 | 440 | 1 | 227.6 | 250 | 401.7 | 250 | 230.8 | 250 | 404.9 | 250 |
| | 460-60 | 414 | 506 | 1 | 227.6 | 250 | 401.7 | 250 | 230.8 | 250 | 404.9 | 250 |
| | 575-60 | 518 | 633 | 1 | 183.0 | 200 | 325.2 | 200 | 184.6 | 200 | 326.8 | 200 |
| 130 | 208/230-60 | 187 | 254 | 1 | 585.2 | 600 | 1027.4 | 600 | 590.6 | 600 | 1032.8 | 600 |
| | 380-60 | 342 | 418 | 1 | 310.5 | 350 | 563.9 | 350 | 310.5 | 350 | 563.9 | 350 |
| | 380/415-50 | 342 | 440 | 1 | 259.4 | 300 | 467.4 | 300 | 263.0 | 300 | 471.0 | 300 |
| | 460-60 | 414 | 506 | 1 | 259.4 | 300 | 467.4 | 300 | 263.0 | 300 | 471.0 | 300 |
| | 575-60 | 518 | 633 | 1 | 210.4 | 225 | 378.0 | 225 | 212.2 | 225 | 379.8 | 225 |
| 150 | 208/230-60 | 187 | 254 | 1 | 648.8 | 700 | 1091.0 | 700 | 654.8 | 700 | 1097.0 | 700 |
| | 380-60 | 342 | 418 | 1 | 347.1 | 350 | 600.5 | 350 | 347.1 | 350 | 600.5 | 350 |
| | 380/415-50 | 342 | 440 | 1 | 289.0 | 300 | 497.0 | 300 | 293.0 | 300 | 501.0 | 300 |
| | 460-60 | 414 | 506 | 1 | 289.0 | 300 | 497.0 | 300 | 293.0 | 300 | 501.0 | 300 |
| | 575-60 | 518 | 633 | 1 | 235.9 | 250 | 403.5 | 250 | 237.9 | 250 | 405.5 | 250 |

LEGEND

**ICF** — Instantaneous Current Flow
**MCA** — Minimum Circuit Amps
**MOCP** — Maximum Overcurrent Protection

NOTES:

1. Units are suitable for use on electrical systems where voltage supplied to the unit terminals is not below or above the listed minimum and maximum limits. Maximum allowable phase imbalance is: voltage 2%; amps 10%.
2. All units/modules have single point primary power connection. (Each unit/module requires its own power supply.) Main power must be supplied from a field-supplied disconnect.
3. Cooler heater is wired into the control circuit so it is always operable as long as the power supply disconnect and heater safety device are on.
4. Power draw control circuits include both crankcase heaters and cooler heaters (where used). Each compressor on sizes 070-090 has a crankcase heater which draws 90 watts of power at 60 Hz or 68 watts of power at 50 Hz, while each compressor on sizes 100-150 has a crankcase heater which draws 56 watts of power at 60 Hz or 42 watts of power at 50 Hz.
5. 30RAP chillers with Greenspeed® intelligence are not available on unit sizes 010, 015, and 070-150.

## 30RAP ELECTRICAL DATA (cont)

### DUAL POINT, LOW-SOUND AEROACOUSTIC™ FAN, NO HYDRONIC PACKAGE

| UNIT 30RAP | UNIT VOLTAGE | | | CIRCUIT 1 | | | | CIRCUIT 2 | | | |
|---|---|---|---|---|---|---|---|---|---|---|---|
| | V-Ph-Hz | Supplied | | MCA | MOCP | ICF | Rec Fuse Size | MCA | MOCP | ICF | Rec Fuse Size |
| | | Min | Max | | | | | | | | |
| 070 | 208/230-3-60 | 187 | 254 | 155.6 | 200 | 425.8 | 175 | 181.4 | 225 | 451.6 | 200 |
| | 380-3-60 | 342 | 418 | 96.0 | 125 | 249.5 | 110 | 110.5 | 125 | 264.0 | 125 |
| | 380/415-3-50 | 342 | 440 | 75.0 | 100 | 220.4 | 90 | 87.4 | 110 | 232.8 | 100 |
| | 460-3-60 | 414 | 506 | 75.0 | 100 | 220.4 | 90 | 87.4 | 110 | 232.8 | 100 |
| | 575-3-60 | 518 | 632 | 65.3 | 80 | 167.7 | 80 | 77.0 | 100 | 179.4 | 90 |
| 080 | 208/230-3-60 | 187 | 254 | 202.7 | 250 | 438.6 | 225 | 181.4 | 225 | 451.6 | 200 |
| | 380-3-60 | 342 | 418 | 110.8 | 125 | 216.2 | 125 | 110.5 | 125 | 264.0 | 125 |
| | 380/415-3-50 | 342 | 440 | 92.5 | 110 | 213.6 | 100 | 87.4 | 110 | 232.8 | 100 |
| | 460-3-60 | 414 | 506 | 92.5 | 110 | 213.6 | 100 | 87.4 | 110 | 232.8 | 100 |
| | 575-3-60 | 518 | 632 | 79.1 | 90 | 163.2 | 90 | 77.0 | 100 | 179.4 | 90 |
| 090 | 208/230-3-60 | 187 | 254 | 217.4 | 250 | 487.6 | 250 | 181.4 | 225 | 451.6 | 200 |
| | 380-3-60 | 342 | 418 | 133.9 | 150 | 287.4 | 150 | 110.5 | 125 | 264.0 | 125 |
| | 380/415-3-50 | 342 | 440 | 104.8 | 125 | 250.2 | 125 | 87.4 | 110 | 232.8 | 100 |
| | 460-3-60 | 414 | 506 | 104.8 | 125 | 250.2 | 125 | 87.4 | 110 | 232.8 | 100 |
| | 575-3-60 | 518 | 632 | 91.4 | 110 | 193.8 | 100 | 77.0 | 100 | 179.4 | 90 |
| 100 | 208/230-3-60 | 187 | 254 | 234.8 | 300 | 677.0 | 300 | 243.8 | 300 | 635.0 | 300 |
| | 380-3-60 | 342 | 418 | 127.3 | 175 | 380.7 | 150 | 124.8 | 150 | 336.8 | 150 |
| | 380/415-3-50 | 342 | 440 | 105.0 | 150 | 313.0 | 125 | 106.3 | 125 | 280.4 | 125 |
| | 460-3-60 | 414 | 506 | 105.0 | 150 | 313.0 | 125 | 106.3 | 125 | 280.4 | 125 |
| | 575-3-60 | 518 | 632 | 85.4 | 125 | 253.0 | 100 | 85.2 | 110 | 227.4 | 100 |
| 115 | 208/230-3-60 | 187 | 254 | 291.8 | 350 | 683.0 | 350 | 243.8 | 300 | 635.0 | 300 |
| | 380-3-60 | 342 | 418 | 156.0 | 175 | 368.0 | 175 | 124.8 | 150 | 336.8 | 150 |
| | 380/415-3-50 | 342 | 440 | 129.5 | 150 | 303.6 | 150 | 106.3 | 125 | 280.4 | 125 |
| | 460-3-60 | 414 | 506 | 129.5 | 150 | 303.6 | 150 | 106.3 | 125 | 280.4 | 125 |
| | 575-3-60 | 518 | 632 | 104.4 | 125 | 246.6 | 125 | 85.2 | 110 | 227.4 | 100 |
| 130 | 208/230-3-60 | 187 | 254 | 297.8 | 350 | 689.0 | 350 | 306.2 | 400 | 748.4 | 350 |
| | 380-3-60 | 342 | 418 | 159.9 | 175 | 371.9 | 175 | 160.2 | 200 | 413.6 | 175 |
| | 380/415-3-50 | 342 | 440 | 132.4 | 150 | 306.5 | 150 | 135.2 | 175 | 343.2 | 150 |
| | 460-3-60 | 414 | 506 | 132.4 | 150 | 306.5 | 150 | 135.2 | 175 | 343.2 | 150 |
| | 575-3-60 | 518 | 632 | 106.8 | 125 | 249.0 | 125 | 110.2 | 125 | 277.8 | 125 |
| 150 | 208/230-3-60 | 187 | 254 | 366.2 | 450 | 808.4 | 400 | 306.2 | 400 | 748.4 | 350 |
| | 380-3-60 | 342 | 418 | 199.2 | 225 | 452.6 | 225 | 160.2 | 200 | 413.6 | 175 |
| | 380/415-3-50 | 342 | 440 | 164.2 | 200 | 372.2 | 175 | 135.2 | 175 | 343.2 | 150 |
| | 460-3-60 | 414 | 506 | 164.2 | 200 | 372.2 | 175 | 135.2 | 175 | 343.2 | 150 |
| | 575-3-60 | 518 | 632 | 134.2 | 150 | 301.8 | 150 | 110.2 | 125 | 277.8 | 125 |

LEGEND

**ICF** — Instantaneous Current Flow
**MCA** — Minimum Circuit Amps
**MOCP** — Maximum Overcurrent Protection

NOTES:

1. Units are suitable for use on electrical systems where voltage supplied to the unit terminals is not below or above the listed minimum and maximum limits. Maximum allowable phase imbalance is: voltage 2%; amps 10%.
2. All units/modules have dual point primary power connection. (Each unit/module requires its own power supply.) Main power must be supplied from a field-supplied disconnect.
3. Cooler heater is wired into the control circuit so it is always operable as long as the power supply disconnect and heater safety device are on.
4. Power draw control circuits include both crankcase heaters and cooler heaters (where used). Each compressor on sizes 070-090 has a crankcase heater which draws 90 watts of power at 60 Hz or 68 watts of power at 50 Hz, while each compressor on sizes 100-150 has a crankcase heater which draws 56 watts of power at 60 Hz or 42 watts of power at 50 Hz.
5. 30RAP chillers with Greenspeed® intelligence are not available on unit sizes 010, 015, and 070-150.

## 30RAP ELECTRICAL DATA (cont)

### DUAL POINT, OPTIONAL VALUE SOUND FAN, NO HYDRONIC PACKAGE

| UNIT 30RAP | UNIT VOLTAGE | | | CIRCUIT 1 | | | | CIRCUIT 2 | | | |
|---|---|---|---|---|---|---|---|---|---|---|---|
| | V-Ph-Hz | Supplied | | MCA | MOCP | ICF | Rec Fuse Size | MCA | MOCP | ICF | Rec Fuse Size |
| | | Min | Max | | | | | | | | |
| 070 | 208/230-3-60 | 187 | 254 | 158.6 | 200 | 428.8 | 175 | 181.4 | 225 | 451.6 | 200 |
| | 380-3-60 | 342 | 418 | 96.0 | 125 | 249.5 | 110 | 110.5 | 125 | 264.0 | 125 |
| | 380/415-3-50 | 342 | 440 | 77.0 | 100 | 222.4 | 90 | 87.4 | 110 | 232.8 | 100 |
| | 460-3-60 | 414 | 506 | 77.0 | 100 | 222.4 | 90 | 87.4 | 110 | 232.8 | 100 |
| | 575-3-60 | 518 | 632 | 66.3 | 90 | 168.7 | 80 | 77.0 | 100 | 179.4 | 90 |
| 080 | 208/230-3-60 | 187 | 254 | 206.3 | 250 | 442.2 | 225 | 181.4 | 225 | 451.6 | 200 |
| | 380-3-60 | 342 | 418 | 110.8 | 125 | 216.2 | 125 | 110.5 | 125 | 264.0 | 125 |
| | 380/415-3-50 | 342 | 440 | 94.9 | 110 | 216.0 | 110 | 87.4 | 110 | 232.8 | 100 |
| | 460-3-60 | 414 | 506 | 94.9 | 110 | 216.0 | 110 | 87.4 | 110 | 232.8 | 100 |
| | 575-3-60 | 518 | 632 | 80.3 | 100 | 164.4 | 90 | 77.0 | 100 | 179.4 | 90 |
| 090 | 208/230-3-60 | 187 | 254 | 221.0 | 250 | 491.2 | 250 | 181.4 | 225 | 451.6 | 200 |
| | 380-3-60 | 342 | 418 | 133.9 | 150 | 287.4 | 150 | 110.5 | 125 | 264.0 | 125 |
| | 380/415-3-50 | 342 | 440 | 107.2 | 125 | 252.6 | 125 | 87.4 | 110 | 232.8 | 100 |
| | 460-3-60 | 414 | 506 | 107.2 | 125 | 252.6 | 125 | 87.4 | 110 | 232.8 | 100 |
| | 575-3-60 | 518 | 632 | 92.6 | 110 | 195.0 | 100 | 77.0 | 100 | 179.4 | 90 |
| 100 | 208/230-3-60 | 187 | 254 | 239.0 | 300 | 681.2 | 300 | 243.8 | 300 | 635.0 | 300 |
| | 380-3-60 | 342 | 418 | 127.3 | 175 | 380.7 | 150 | 124.8 | 150 | 336.8 | 150 |
| | 380/415-3-50 | 342 | 440 | 107.8 | 125 | 315.8 | 125 | 106.3 | 125 | 280.4 | 125 |
| | 460-3-60 | 414 | 506 | 107.8 | 125 | 315.8 | 125 | 106.3 | 125 | 280.4 | 125 |
| | 575-3-60 | 518 | 632 | 86.8 | 110 | 254.4 | 100 | 85.2 | 110 | 227.4 | 100 |
| 115 | 208/230-3-60 | 187 | 254 | 296.6 | 350 | 687.8 | 350 | 243.8 | 300 | 635.0 | 300 |
| | 380-3-60 | 342 | 418 | 156.0 | 175 | 368.0 | 175 | 124.8 | 150 | 336.8 | 150 |
| | 380/415-3-50 | 342 | 440 | 132.7 | 150 | 306.8 | 150 | 106.3 | 125 | 280.4 | 125 |
| | 460-3-60 | 414 | 506 | 132.7 | 150 | 306.8 | 150 | 106.3 | 125 | 280.4 | 125 |
| | 575-3-60 | 518 | 632 | 106.0 | 125 | 248.2 | 125 | 85.2 | 110 | 227.4 | 100 |
| 130 | 208/230-3-60 | 187 | 254 | 303.2 | 350 | 694.4 | 350 | 306.2 | 400 | 748.4 | 350 |
| | 380-3-60 | 342 | 418 | 159.9 | 175 | 371.9 | 175 | 160.2 | 200 | 413.6 | 175 |
| | 380/415-3-50 | 342 | 440 | 136.0 | 150 | 310.1 | 150 | 135.2 | 175 | 343.2 | 150 |
| | 460-3-60 | 414 | 506 | 136.0 | 150 | 310.1 | 150 | 135.2 | 175 | 343.2 | 150 |
| | 575-3-60 | 518 | 632 | 108.6 | 125 | 250.8 | 125 | 110.2 | 125 | 277.8 | 125 |
| 150 | 208/230-3-60 | 187 | 254 | 372.2 | 450 | 814.4 | 400 | 306.2 | 400 | 748.4 | 350 |
| | 380-3-60 | 342 | 418 | 199.2 | 225 | 452.6 | 225 | 160.2 | 200 | 413.6 | 175 |
| | 380/415-3-50 | 342 | 440 | 168.2 | 200 | 376.2 | 200 | 135.2 | 175 | 343.2 | 150 |
| | 460-3-60 | 414 | 506 | 168.2 | 200 | 376.2 | 200 | 135.2 | 175 | 343.2 | 150 |
| | 575-3-60 | 518 | 632 | 136.2 | 150 | 303.8 | 150 | 110.2 | 125 | 277.8 | 125 |

LEGEND

**ICF** — Instantaneous Current Flow
**MCA** — Minimum Circuit Amps
**MOCP** — Maximum Overcurrent Protection

NOTES:

1. Units are suitable for use on electrical systems where voltage supplied to the unit terminals is not below or above the listed minimum and maximum limits. Maximum allowable phase imbalance is: voltage 2%; amps 10%.
2. All units/modules have dual point primary power connection. (Each unit/module requires its own power supply.) Main power must be supplied from a field-supplied disconnect.
3. Cooler heater is wired into the control circuit so it is always operable as long as the power supply disconnect and heater safety device are on.
4. Power draw control circuits include both crankcase heaters and cooler heaters (where used). Each compressor on sizes 070-090 has a crankcase heater which draws 90 watts of power at 60 Hz or 68 watts of power at 50 Hz, while each compressor on sizes 100-150 has a crankcase heater which draws 56 watts of power at 60 Hz or 42 watts of power at 50 Hz.
5. 30RAP chillers with Greenspeed® intelligence are not available on unit sizes 010, 015, and 070-150.

## 30RAP ELECTRICAL DATA (cont)

### SINGLE POINT, HYDRONIC PACKAGE WITH STANDARD LOW-SOUND AEROACOUSTIC™ FAN (60 Hz ONLY), UNIT SIZES 010-060

| 30RAP UNIT SIZE | VOLTAGE V-Hz (3 Ph) | PUMP SIZE 1.5 hp | | | | PUMP SIZE 3.0 hp | | | | PUMP SIZE 5.0 hp | | | |
|---|---|---|---|---|---|---|---|---|---|---|---|---|---|
| | | MCA | MOCP | ICF | REC FUSE | MCA | MOCP | ICF | REC FUSE | MCA | MOCP | ICF | REC FUSE |
| 010 | 208/230-60 | 70.4 | 110 | 255.3 | 90 | 74.0 | 110 | 258.9 | 90 | 78.7 | 125 | 263.6 | 100 |
| | 380-60 | 35.9 | 50 | 151.3 | 45 | 37.9 | 60 | 153.3 | 45 | 40.5 | 60 | 155.9 | 50 |
| | 460-60 | 28.3 | 45 | 130.0 | 35 | 29.9 | 45 | 131.6 | 35 | 32.0 | 50 | 133.7 | 40 |
| | 575-60 | 22.4 | 35 | 104.0 | 30 | 23.8 | 35 | 105.4 | 30 | 25.4 | 40 | 107.0 | 30 |
| 011 | 208/230-60 | 55.3 | 70 | 190.3 | 70 | 58.9 | 80 | 193.9 | 70 | 63.6 | 80 | 198.6 | 70 |
| | 380-60 | 30.1 | 40 | 87.8 | 35 | 32.1 | 40 | 89.8 | 35 | 34.7 | 45 | 92.4 | 40 |
| | 460-60 | 26.8 | 35 | 87.8 | 30 | 28.4 | 35 | 89.4 | 35 | 30.5 | 40 | 91.5 | 35 |
| | 575-60 | 19.6 | 25 | 63.7 | 25 | 21.0 | 25 | 65.1 | 25 | 22.6 | 30 | 66.7 | 25 |
| 015 | 208/230-60 | 80.1 | 125 | 350.3 | 100 | 83.7 | 125 | 353.9 | 100 | 88.4 | 125 | 358.6 | 110 |
| | 380-60 | 48.8 | 80 | 202.3 | 60 | 50.8 | 80 | 204.3 | 60 | 53.4 | 80 | 206.9 | 70 |
| | 460-60 | 38.6 | 60 | 184.0 | 50 | 40.2 | 60 | 185.6 | 50 | 42.3 | 60 | 187.7 | 50 |
| | 575-60 | 33.6 | 50 | 136.0 | 40 | 35.0 | 50 | 137.4 | 45 | 36.6 | 60 | 139.0 | 45 |
| 016 | 208/230-60 | 68.8 | 90 | 273.5 | 80 | 72.4 | 100 | 277.1 | 80 | 77.1 | 100 | 281.8 | 90 |
| | 380-60 | 38.5 | 50 | 153.5 | 45 | 40.5 | 50 | 155.5 | 45 | 43.1 | 50 | 158.0 | 50 |
| | 460-60 | 34.6 | 45 | 146.2 | 40 | 36.2 | 50 | 147.8 | 40 | 38.3 | 50 | 149.9 | 45 |
| | 575-60 | 26.0 | 35 | 105.6 | 30 | 27.4 | 35 | 107.0 | 30 | 29.0 | 40 | 108.6 | 35 |
| 018 | 208/230-60 | 91.5 | 110 | 274.7 | 100 | 95.1 | 125 | 278.3 | 110 | 99.8 | 125 | 283.0 | 110 |
| | 380-60 | 53.5 | 70 | 169.4 | 60 | 55.5 | 70 | 171.4 | 70 | 58.1 | 70 | 174.0 | 70 |
| | 460-60 | 45.5 | 60 | 138.6 | 50 | 47.1 | 60 | 140.2 | 60 | 49.2 | 60 | 142.3 | 60 |
| | 575-60 | 36.5 | 45 | 99.8 | 40 | 37.9 | 50 | 101.2 | 45 | 39.5 | 50 | 102.8 | 45 |
| 020 | 208/230-60 | 96.9 | 125 | 291.1 | 110 | 100.5 | 125 | 294.7 | 110 | 105.2 | 125 | 299.4 | 125 |
| | 380-60 | 63.6 | 80 | 178.9 | 70 | 65.6 | 80 | 180.9 | 80 | 68.2 | 90 | 183.5 | 80 |
| | 460-60 | 48.2 | 60 | 150.8 | 60 | 49.8 | 60 | 152.4 | 60 | 51.9 | 60 | 154.5 | 60 |
| | 575-60 | 38.6 | 50 | 100.7 | 45 | 40.0 | 50 | 102.1 | 45 | 41.6 | 50 | 103.7 | 50 |
| 025 | 208/230-60 | 131.7 | 175 | 367.6 | 150 | 135.3 | 175 | 371.2 | 150 | 140.0 | 175 | 375.9 | 175 |
| | 380-60 | 70.7 | 90 | 176.1 | 80 | 72.7 | 90 | 178.1 | 80 | 75.3 | 100 | 180.7 | 90 |
| | 460-60 | 59.9 | 80 | 181.0 | 70 | 61.5 | 80 | 182.6 | 70 | 63.6 | 80 | 184.7 | 70 |
| | 575-60 | 51.2 | 70 | 135.3 | 60 | 52.6 | 70 | 136.7 | 60 | 54.2 | 70 | 138.3 | 60 |
| 030 | 208/230-60 | 141.9 | 175 | 412.1 | 175 | 145.5 | 200 | 415.7 | 175 | 150.2 | 200 | 420.4 | 175 |
| | 380-60 | 86.7 | 110 | 240.2 | 100 | 88.7 | 110 | 242.2 | 100 | 91.3 | 125 | 244.8 | 100 |
| | 460-60 | 68.4 | 90 | 213.8 | 80 | 70.0 | 90 | 215.4 | 80 | 72.1 | 90 | 217.5 | 80 |
| | 575-60 | 59.7 | 80 | 162.1 | 70 | 61.1 | 80 | 163.5 | 70 | 62.7 | 80 | 165.1 | 70 |
| 035 | 208/230-60 | — | — | — | — | 173.3 | 200 | 367.5 | 200 | 178.0 | 200 | 372.2 | 200 |
| | 380-60 | — | — | — | — | 107.9 | 125 | 223.3 | 125 | 110.5 | 125 | 225.9 | 125 |
| | 460-60 | — | — | — | — | 86.1 | 100 | 188.7 | 100 | 88.2 | 100 | 190.8 | 100 |
| | 575-60 | — | — | — | — | 69.1 | 80 | 131.2 | 80 | 70.7 | 80 | 132.8 | 80 |
| 040 | 208/230-60 | — | — | — | — | 205.7 | 250 | 402.9 | 225 | 210.4 | 250 | 407.6 | 225 |
| | 380-60 | — | — | — | — | 116.9 | 125 | 232.2 | 125 | 119.5 | 125 | 234.8 | 125 |
| | 460-60 | — | — | — | — | 90.1 | 100 | 192.5 | 100 | 92.2 | 110 | 194.6 | 100 |
| | 575-60 | — | — | — | — | 71.9 | 80 | 153.9 | 80 | 73.5 | 80 | 155.5 | 80 |
| 045 | 208/230-60 | — | — | — | — | 237.5 | 250 | 476.6 | 250 | 242.2 | 250 | 481.3 | 250 |
| | 380-60 | — | — | — | — | 124.0 | 150 | 232.6 | 150 | 126.6 | 150 | 235.2 | 150 |
| | 460-60 | — | — | — | — | 101.6 | 110 | 227.2 | 110 | 103.7 | 125 | 229.3 | 110 |
| | 575-60 | — | — | — | — | 84.4 | 100 | 173.7 | 90 | 86.0 | 100 | 175.3 | 100 |
| 050 | 208/230-60 | — | — | — | — | 243.9 | 250 | 479.8 | 250 | 248.6 | 250 | 484.5 | 250 |
| | 380-60 | — | — | — | — | 130.4 | 150 | 235.8 | 150 | 133.0 | 150 | 238.4 | 150 |
| | 460-60 | — | — | — | — | 110.6 | 125 | 231.7 | 125 | 112.7 | 125 | 233.8 | 125 |
| | 575-60 | — | — | — | — | 94.8 | 110 | 178.9 | 100 | 96.4 | 110 | 180.5 | 110 |
| 055 | 208/230-60 | — | — | — | — | 260.1 | 300 | 534.8 | 300 | 264.8 | 300 | 539.5 | 300 |
| | 380-60 | — | — | — | — | 150.3 | 175 | 310.9 | 175 | 152.9 | 175 | 313.5 | 175 |
| | 460-60 | — | — | — | — | 122.0 | 125 | 271.2 | 125 | 124.1 | 150 | 273.3 | 150 |
| | 575-60 | — | — | — | — | 105.7 | 125 | 211.9 | 125 | 107.3 | 125 | 213.5 | 125 |
| 060 | 208/230-60 | — | — | — | — | 269.1 | 300 | 539.3 | 300 | 273.8 | 300 | 544.0 | 300 |
| | 380-60 | — | — | — | — | 164.5 | 175 | 318.0 | 175 | 167.1 | 200 | 320.6 | 200 |
| | 460-60 | — | — | — | — | 129.6 | 150 | 275.0 | 150 | 131.7 | 150 | 277.1 | 150 |
| | 575-60 | — | — | — | — | 113.3 | 125 | 215.7 | 125 | 114.9 | 125 | 217.3 | 125 |

LEGEND

**ICF** — Instantaneous Current Flow
**MCA** — Minimum Circuit Amps
**MOCP** — Maximum Overcurrent Protection

NOTES:
1. Units are suitable for use on electrical systems where voltage supplied to the unit terminals is not below or above the listed minimum and maximum limits. Maximum allowable phase imbalance is: voltage 2%; amps 10%.
2. All units/modules have single point primary power connection. (Each unit/module requires its own power supply.) Main power must be supplied from a field-supplied disconnect.
3. Cooler heater is wired into the control circuit so it is always operable as long as the power supply disconnect and heater safety device are on.
4. Power draw control circuits include both crankcase heaters (sizes 070-150 only) and cooler heaters (where used). Each compressor on sizes 070-090 has a crankcase heater which draws 90 watts of power, while each compressor on sizes 100-150 has a crankcase heater which draws 56 watts of power.
5. 30RAP chillers with Greenspeed® intelligence are not available on unit sizes 010, 015, and 070-150.

## 30RAP ELECTRICAL DATA (cont)

### SINGLE POINT, HYDRONIC PACKAGE WITH STANDARD LOW-SOUND AEROACOUSTIC™ FAN (60 Hz ONLY), UNIT SIZES 010-060 (cont)

| 30RAP UNIT SIZE | VOLTAGE V-Hz (3 Ph) | PUMP SIZE 7.5 hp | | | | PUMP SIZE 10.0 hp | | | | PUMP SIZE 15.0 hp | | | |
|---|---|---|---|---|---|---|---|---|---|---|---|---|---|
| | | MCA | MOCP | ICF | REC FUSE | MCA | MOCP | ICF | REC FUSE | MCA | MOCP | ICF | REC FUSE |
| 010 | 208/230-60 | — | — | — | — | — | — | — | — | — | — | — | — |
| | 380-60 | — | — | — | — | — | — | — | — | — | — | — | — |
| | 460-60 | — | — | — | — | — | — | — | — | — | — | — | — |
| | 575-60 | — | — | — | — | — | — | — | — | — | — | — | — |
| 011 | 208/230-60 | — | — | — | — | — | — | — | — | — | — | — | — |
| | 380-60 | — | — | — | — | — | — | — | — | — | — | — | — |
| | 460-60 | — | — | — | — | — | — | — | — | — | — | — | — |
| | 575-60 | — | — | — | — | — | — | — | — | — | — | — | — |
| 015 | 208/230-60 | — | — | — | — | — | — | — | — | — | — | — | — |
| | 380-60 | — | — | — | — | — | — | — | — | — | — | — | — |
| | 460-60 | — | — | — | — | — | — | — | — | — | — | — | — |
| | 575-60 | — | — | — | — | — | — | — | — | — | — | — | — |
| 016 | 208/230-60 | — | — | — | — | — | — | — | — | — | — | — | — |
| | 380-60 | — | — | — | — | — | — | — | — | — | — | — | — |
| | 460-60 | — | — | — | — | — | — | — | — | — | — | — | — |
| | 575-60 | — | — | — | — | — | — | — | — | — | — | — | — |
| 018 | 208/230-60 | — | — | — | — | — | — | — | — | — | — | — | — |
| | 380-60 | — | — | — | — | — | — | — | — | — | — | — | — |
| | 460-60 | — | — | — | — | — | — | — | — | — | — | — | — |
| | 575-60 | — | — | — | — | — | — | — | — | — | — | — | — |
| 020 | 208/230-60 | — | — | — | — | — | — | — | — | — | — | — | — |
| | 380-60 | — | — | — | — | — | — | — | — | — | — | — | — |
| | 460-60 | — | — | — | — | — | — | — | — | — | — | — | — |
| | 575-60 | — | — | — | — | — | — | — | — | — | — | — | — |
| 025 | 208/230-60 | — | — | — | — | — | — | — | — | — | — | — | — |
| | 380-60 | — | — | — | — | — | — | — | — | — | — | — | — |
| | 460-60 | — | — | — | — | — | — | — | — | — | — | — | — |
| | 575-60 | — | — | — | — | — | — | — | — | — | — | — | — |
| 030 | 208/230-60 | — | — | — | — | — | — | — | — | — | — | — | — |
| | 380-60 | — | — | — | — | — | — | — | — | — | — | — | — |
| | 460-60 | — | — | — | — | — | — | — | — | — | — | — | — |
| | 575-60 | — | — | — | — | — | — | — | — | — | — | — | — |
| 035 | 208/230-60 | 183.9 | 200 | 378.1 | 200 | — | — | — | — | — | — | — | — |
| | 380-60 | 113.9 | 125 | 229.3 | 125 | — | — | — | — | — | — | — | — |
| | 460-60 | 91.1 | 100 | 193.7 | 100 | — | — | — | — | — | — | — | — |
| | 575-60 | 73.1 | 80 | 135.2 | 80 | — | — | — | — | — | — | — | — |
| 040 | 208/230-60 | 216.3 | 250 | 413.5 | 250 | — | — | — | — | — | — | — | — |
| | 380-60 | 122.9 | 125 | 238.2 | 125 | — | — | — | — | — | — | — | — |
| | 460-60 | 95.1 | 110 | 197.5 | 100 | — | — | — | — | — | — | — | — |
| | 575-60 | 75.9 | 90 | 157.9 | 80 | — | — | — | — | — | — | — | — |
| 045 | 208/230-60 | 248.1 | 250 | 487.2 | 250 | — | — | — | — | — | — | — | — |
| | 380-60 | 130.0 | 150 | 238.6 | 150 | — | — | — | — | — | — | — | — |
| | 460-60 | 106.6 | 125 | 232.2 | 125 | — | — | — | — | — | — | — | — |
| | 575-60 | 88.4 | 100 | 177.7 | 100 | — | — | — | — | — | — | — | — |
| 050 | 208/230-60 | 254.5 | 300 | 490.4 | 300 | 261.0 | 300 | 496.9 | 300 | — | — | — | — |
| | 380-60 | 136.4 | 150 | 241.8 | 150 | 140.0 | 150 | 245.4 | 150 | — | — | — | — |
| | 460-60 | 115.6 | 125 | 236.7 | 125 | 118.4 | 125 | 239.5 | 125 | — | — | — | — |
| | 575-60 | 98.8 | 110 | 182.9 | 110 | 101.0 | 110 | 185.1 | 110 | — | — | — | — |
| 055 | 208/230-60 | 270.7 | 300 | 545.4 | 300 | 277.2 | 300 | 551.9 | 300 | — | — | — | — |
| | 380-60 | 156.3 | 175 | 316.9 | 175 | 159.9 | 175 | 320.5 | 175 | — | — | — | — |
| | 460-60 | 127.0 | 150 | 276.2 | 150 | 129.8 | 150 | 279.0 | 150 | — | — | — | — |
| | 575-60 | 109.7 | 125 | 215.9 | 125 | 111.9 | 125 | 218.1 | 125 | — | — | — | — |
| 060 | 208/230-60 | 279.7 | 300 | 549.9 | 300 | 286.2 | 300 | 556.4 | 300 | — | — | — | — |
| | 380-60 | 170.5 | 200 | 324.0 | 200 | 174.1 | 200 | 327.6 | 200 | — | — | — | — |
| | 460-60 | 134.6 | 150 | 280.0 | 150 | 137.4 | 150 | 282.8 | 150 | — | — | — | — |
| | 575-60 | 117.3 | 125 | 219.7 | 125 | 119.5 | 125 | 221.9 | 125 | — | — | — | — |

LEGEND

**ICF** — Instantaneous Current Flow
**MCA** — Minimum Circuit Amps
**MOCP** — Maximum Overcurrent Protection

NOTES:
1. Units are suitable for use on electrical systems where voltage supplied to the unit terminals is not below or above the listed minimum and maximum limits. Maximum allowable phase imbalance is: voltage 2%; amps 10%.
2. All units/modules have single point primary power connection. (Each unit/module requires its own power supply.) Main power must be supplied from a field-supplied disconnect.
3. Cooler heater is wired into the control circuit so it is always operable as long as the power supply disconnect and heater safety device are on.
4. Power draw control circuits include both crankcase heaters (sizes 070-150 only) and cooler heaters (where used). Each compressor on sizes 070-090 has a crankcase heater which draws 90 watts of power, while each compressor on sizes 100-150 has a crankcase heater which draws 56 watts of power.
5. 30RAP chillers with Greenspeed® intelligence are not available on unit sizes 010, 015, and 070-150.

## 30RAP ELECTRICAL DATA (cont)

### SINGLE POINT ,HYDRONIC PACKAGE WITH STANDARD LOW-SOUND AEROACOUSTIC™ FAN (60 Hz ONLY), UNIT SIZES 070-150

| 30RAP UNIT SIZE | VOLTAGE V-Hz (3 Ph) | PUMP SIZE 1.5 hp | | | | PUMP SIZE 3.0 hp | | | | PUMP SIZE 5.0 hp | | | |
|---|---|---|---|---|---|---|---|---|---|---|---|---|---|
| | | MCA | MOCP | ICF | REC FUSE | MCA | MOCP | ICF | REC FUSE | MCA | MOCP | ICF | REC FUSE |
| 070 | 208/230-60 | — | — | — | — | 332.1 | 350 | 602.3 | 350 | 338.4 | 350 | 608.6 | 350 |
| | 380-60 | — | — | — | — | 203.1 | 225 | 356.6 | 225 | 206.1 | 225 | 359.6 | 225 |
| | 460-60 | — | — | — | — | 159.9 | 175 | 305.3 | 175 | 162.8 | 175 | 308.2 | 175 |
| | 575-60 | — | — | — | — | 139.7 | 150 | 242.1 | 150 | 141.8 | 150 | 244.2 | 150 |
| 080 | 208/230-60 | — | — | — | — | — | — | — | — | 386.7 | 400 | 656.9 | 400 |
| | 380-60 | — | — | — | — | — | — | — | — | 222.7 | 250 | 376.2 | 250 |
| | 460-60 | — | — | — | — | — | — | — | — | 181.2 | 200 | 326.6 | 200 |
| | 575-60 | — | — | — | — | — | — | — | — | 156.5 | 175 | 258.9 | 175 |
| 090 | 208/230-60 | — | — | — | — | — | — | — | — | 400.2 | 450 | 670.4 | 450 |
| | 380-60 | — | — | — | — | — | — | — | — | 244.0 | 250 | 397.5 | 250 |
| | 460-60 | — | — | — | — | — | — | — | — | 192.6 | 200 | 338.0 | 200 |
| | 575-60 | — | — | — | — | — | — | — | — | 167.9 | 175 | 270.3 | 175 |
| 100 | 208/230-60 | — | — | — | — | — | — | — | — | 475.2 | 500 | 917.4 | 500 |
| | 380-60 | — | — | — | — | — | — | — | — | 250.6 | 300 | 504.0 | 300 |
| | 460-60 | — | — | — | — | — | — | — | — | 210.2 | 250 | 418.2 | 225 |
| | 575-60 | — | — | — | — | — | — | — | — | 169.4 | 200 | 337.0 | 200 |
| 115 | 208/230-60 | — | — | — | — | — | — | — | — | 532.2 | 600 | 923.4 | 600 |
| | 380-60 | — | — | — | — | — | — | — | — | 279.3 | 300 | 491.3 | 300 |
| | 460-60 | — | — | — | — | — | — | — | — | 234.7 | 250 | 408.8 | 250 |
| | 575-60 | — | — | — | — | — | — | — | — | 188.4 | 200 | 330.6 | 200 |
| 130 | 208/230-60 | — | — | — | — | — | — | — | — | 600.6 | 700 | 1042.8 | 700 |
| | 380-60 | — | — | — | — | — | — | — | — | 318.6 | 350 | 572.0 | 350 |
| | 460-60 | — | — | — | — | — | — | — | — | 266.5 | 300 | 474.5 | 300 |
| | 575-60 | — | — | — | — | — | — | — | — | 215.8 | 225 | 383.4 | 225 |
| 150 | 208/230-60 | — | — | — | — | — | — | — | — | 664.2 | 700 | 1106.4 | 700 |
| | 380-60 | — | — | — | — | — | — | — | — | 355.2 | 400 | 608.6 | 400 |
| | 460-60 | — | — | — | — | — | — | — | — | 296.1 | 300 | 504.1 | 300 |
| | 575-60 | — | — | — | — | — | — | — | — | 241.3 | 250 | 408.9 | 250 |

| 30RAP UNIT SIZE | VOLTAGE V-Hz (3 Ph) | PUMP SIZE 7.5 hp | | | |
|---|---|---|---|---|---|
| | | MCA | MOCP | ICF | REC FUSE |
| 070 | 208/230-60 | 341.5 | 350 | 611.7 | 350 |
| | 380-60 | 208.4 | 225 | 361.9 | 225 |
| | 460-60 | 164.4 | 175 | 309.8 | 175 |
| | 575-60 | 143.4 | 150 | 245.8 | 150 |
| 080 | 208/230-60 | 389.8 | 400 | 660.0 | 400 |
| | 380-60 | 225.0 | 250 | 378.5 | 250 |
| | 460-60 | 182.8 | 200 | 328.2 | 200 |
| | 575-60 | 158.1 | 175 | 260.5 | 175 |
| 090 | 208/230-60 | 403.3 | 450 | 673.5 | 450 |
| | 380-60 | 246.3 | 250 | 399.8 | 250 |
| | 460-60 | 194.2 | 200 | 339.6 | 200 |
| | 575-60 | 169.5 | 175 | 271.9 | 175 |
| 100 | 208/230-60 | 478.3 | 500 | 920.5 | 500 |
| | 380-60 | 252.9 | 300 | 506.3 | 300 |
| | 460-60 | 211.8 | 250 | 419.8 | 225 |
| | 575-60 | 171.0 | 200 | 338.6 | 200 |
| 115 | 208/230-60 | 535.3 | 600 | 926.5 | 600 |
| | 380-60 | 281.6 | 300 | 493.6 | 300 |
| | 460-60 | 236.3 | 250 | 410.4 | 250 |
| | 575-60 | 190.0 | 200 | 332.2 | 200 |
| 130 | 208/230-60 | 603.7 | 700 | 1045.9 | 700 |
| | 380-60 | 320.9 | 350 | 574.3 | 350 |
| | 460-60 | 268.1 | 300 | 476.1 | 300 |
| | 575-60 | 217.4 | 250 | 385.0 | 250 |
| 150 Dual Pump | 208/230-60 | 667.3 | 700 | 1109.5 | 700 |
| | 380-60 | 357.5 | 400 | 610.9 | 400 |
| | 460-60 | 297.7 | 300 | 505.7 | 300 |
| | 575-60 | 242.9 | 250 | 410.5 | 250 |
| 150 Single Pump | 208/230-60 | 670.8 | 700 | 1113.0 | 700 |
| | 380-60 | 359.4 | 400 | 612.8 | 400 |
| | 460-60 | 299.1 | 300 | 507.1 | 300 |
| | 575-60 | 244.0 | 250 | 411.6 | 250 |

LEGEND

**ICF** — Instantaneous Current Flow
**MCA** — Minimum Circuit Amps
**MOCP** — Maximum Overcurrent Protection

NOTES:
1. Units are suitable for use on electrical systems where voltage supplied to the unit terminals is not below or above the listed minimum and maximum limits. Maximum allowable phase imbalance is: voltage 2%; amps 10%.
2. All units/modules have single point primary power connection. (Each unit/module requires its own power supply.) Main power must be supplied from a field-supplied disconnect.
3. Cooler heater is wired into the control circuit so it is always operable as long as the power supply disconnect and heater safety device are on.
4. Power draw control circuits include both crankcase heaters (sizes 070-150 only) and cooler heaters (where used). Each compressor on sizes 070-090 has a crankcase heater which draws 90 watts of power, while each compressor on sizes 100-150 has a crankcase heater which draws 56 watts of power.
5. 30RAP chillers with Greenspeed® intelligence are not available on unit sizes 010, 015, and 070-150.
6. All data is the same for single pump or dual pump except for size 150 with 7.5 hp pump.

| 30RAP UNIT SIZE | VOLTAGE V-Hz (3 Ph) | PUMP SIZE 10.0 hp | | | | PUMP SIZE 15.0 hp | | | |
|---|---|---|---|---|---|---|---|---|---|
| | | MCA | MOCP | ICF | REC FUSE | MCA | MOCP | ICF | REC FUSE |
| 070 | 208/230-60 | 348.0 | 400 | 618.2 | 400 | — | — | — | — |
| | 380-60 | 212.0 | 225 | 365.5 | 225 | — | — | — | — |
| | 460-60 | 167.2 | 175 | 312.6 | 175 | — | — | — | — |
| | 575-60 | 145.6 | 150 | 248.0 | 150 | — | — | — | — |
| 080 | 208/230-60 | 396.3 | 450 | 666.5 | 450 | 408.0 | 450 | 678.2 | 450 |
| | 380-60 | 228.6 | 250 | 382.1 | 250 | 235.6 | 250 | 389.1 | 250 |
| | 460-60 | 185.6 | 200 | 331.0 | 200 | 191.1 | 200 | 336.5 | 200 |
| | 575-60 | 160.3 | 175 | 262.7 | 175 | 165.1 | 175 | 267.5 | 175 |
| 090 | 208/230-60 | 409.8 | 450 | 680.0 | 450 | 421.5 | 450 | 691.7 | 450 |
| | 380-60 | 249.9 | 250 | 403.4 | 250 | 256.9 | 300 | 410.4 | 300 |
| | 460-60 | 197.0 | 200 | 342.4 | 200 | 202.5 | 225 | 347.9 | 225 |
| | 575-60 | 171.7 | 175 | 274.1 | 175 | 176.5 | 200 | 278.9 | 200 |
| 100 | 208/230-60 | 484.8 | 500 | 927.0 | 500 | 496.5 | 500 | 938.7 | 500 |
| | 380-60 | 256.5 | 300 | 509.9 | 300 | 263.5 | 300 | 516.9 | 300 |
| | 460-60 | 214.6 | 250 | 422.0 | 250 | 220.1 | 250 | 428.1 | 250 |
| | 575-60 | 173.2 | 200 | 340.8 | 200 | 178.0 | 200 | 345.6 | 200 |
| 115 | 208/230-60 | 541.8 | 600 | 933.0 | 600 | 553.5 | 600 | 944.7 | 600 |
| | 380-60 | 285.2 | 300 | 497.2 | 300 | 292.2 | 300 | 504.2 | 300 |
| | 460-60 | 239.1 | 250 | 413.2 | 250 | 244.6 | 250 | 418.7 | 250 |
| | 575-60 | 192.2 | 200 | 334.4 | 200 | 197.0 | 200 | 339.2 | 200 |
| 130 | 208/230-60 | 610.2 | 700 | 1052.4 | 700 | 621.9 | 700 | 1064.1 | 700 |
| | 380-60 | 324.5 | 350 | 577.9 | 350 | 331.5 | 350 | 584.9 | 350 |
| | 460-60 | 270.9 | 300 | 478.9 | 300 | 276.4 | 300 | 484.4 | 300 |
| | 575-60 | 219.6 | 250 | 387.2 | 250 | 224.4 | 250 | 392.0 | 250 |
| 150 | 208/230-60 | 673.8 | 700 | 1116.0 | 700 | 685.5 | 700 | 1127.7 | 700 |
| | 380-60 | 361.1 | 400 | 614.5 | 400 | 368.1 | 400 | 621.5 | 400 |
| | 460-60 | 300.5 | 350 | 508.5 | 350 | 306.0 | 350 | 514.0 | 350 |
| | 575-60 | 245.1 | 250 | 412.7 | 250 | 249.9 | 250 | 417.5 | 250 |

## 30RAP ELECTRICAL DATA (cont)

### DUAL POINT, HYDRONIC PACKAGE WITH STANDARD LOW-SOUND AEROACOUSTIC™ FAN (60 Hz ONLY)

| 30RAP UNIT SIZE | VOLTAGE V-Ph-Hz | PUMP SIZE 3.0 hp CIRCUIT 1 | | | | PUMP SIZE 3.0 hp CIRCUIT 2 | | | |
|---|---|---|---|---|---|---|---|---|---|
| | | MCA | MOCP | ICF | REC FUSE | MCA | MOCP | ICF | REC FUSE |
| 070 | 208/230-3-60 | 155.6 | 200 | 425.8 | 175 | 190.5 | 225 | 460.7 | 225 |
| | 380-3-60 | 96.0 | 125 | 249.5 | 110 | 115.6 | 125 | 269.1 | 125 |
| | 460-3-60 | 75.0 | 100 | 220.4 | 90 | 91.6 | 110 | 237.0 | 100 |
| | 575-3-60 | 65.3 | 80 | 167.7 | 80 | 80.3 | 100 | 182.7 | 90 |
| 080 | 208/230-3-60 | — | — | — | — | — | — | — | — |
| | 380-3-60 | — | — | — | — | — | — | — | — |
| | 460-3-60 | — | — | — | — | — | — | — | — |
| | 575-3-60 | — | — | — | — | — | — | — | — |
| 090 | 208/230-3-60 | — | — | — | — | — | — | — | — |
| | 380-3-60 | — | — | — | — | — | — | — | — |
| | 460-3-60 | — | — | — | — | — | — | — | — |
| | 575-3-60 | — | — | — | — | — | — | — | — |
| 100 | 208/230-3-60 | — | — | — | — | — | — | — | — |
| | 380-3-60 | — | — | — | — | — | — | — | — |
| | 460-3-60 | — | — | — | — | — | — | — | — |
| | 575-3-60 | — | — | — | — | — | — | — | — |
| 115 | 208/230-3-60 | — | — | — | — | — | — | — | — |
| | 380-3-60 | — | — | — | — | — | — | — | — |
| | 460-3-60 | — | — | — | — | — | — | — | — |
| | 575-3-60 | — | — | — | — | — | — | — | — |
| 130 | 208/230-3-60 | — | — | — | — | — | — | — | — |
| | 380-3-60 | — | — | — | — | — | — | — | — |
| | 460-3-60 | — | — | — | — | — | — | — | — |
| | 575-3-60 | — | — | — | — | — | — | — | — |
| 150 | 208/230-3-60 | — | — | — | — | — | — | — | — |
| | 380-3-60 | — | — | — | — | — | — | — | — |
| | 460-3-60 | — | — | — | — | — | — | — | — |
| | 575-3-60 | — | — | — | — | — | — | — | — |

| 30RAP UNIT SIZE | VOLTAGE V-Ph-Hz | PUMP SIZE 5.0 hp CIRCUIT 1 | | | | PUMP SIZE 5.0 hp CIRCUIT 2 | | | |
|---|---|---|---|---|---|---|---|---|---|
| | | MCA | MOCP | ICF | REC FUSE | MCA | MOCP | ICF | REC FUSE |
| 070 | 208/230-3-60 | 155.6 | 200 | 425.8 | 175 | 196.8 | 250 | 467.0 | 225 |
| | 380-3-60 | 96.0 | 125 | 249.5 | 110 | 118.6 | 150 | 272.1 | 150 |
| | 460-3-60 | 75.0 | 100 | 220.4 | 90 | 94.5 | 110 | 241.5 | 110 |
| | 575-3-60 | 65.3 | 80 | 167.7 | 80 | 82.4 | 100 | 184.8 | 90 |
| 080 | 208/230-3-60 | 202.7 | 250 | 438.6 | 225 | 196.8 | 250 | 467.0 | 225 |
| | 380-3-60 | 110.8 | 125 | 216.2 | 125 | 118.6 | 150 | 272.1 | 150 |
| | 460-3-60 | 92.5 | 110 | 213.6 | 100 | 94.5 | 110 | 239.9 | 110 |
| | 575-3-60 | 79.1 | 90 | 163.2 | 90 | 82.4 | 100 | 184.8 | 90 |
| 090 | 208/230-3-60 | 217.4 | 250 | 487.6 | 250 | 196.8 | 250 | 467.0 | 225 |
| | 380-3-60 | 133.9 | 150 | 287.4 | 150 | 118.6 | 150 | 272.1 | 150 |
| | 460-3-60 | 104.8 | 125 | 250.2 | 125 | 94.5 | 110 | 239.9 | 110 |
| | 575-3-60 | 91.4 | 110 | 193.8 | 100 | 82.4 | 100 | 184.8 | 90 |
| 100 | 208/230-3-60 | 234.8 | 300 | 677.0 | 300 | 259.2 | 300 | 650.4 | 300 |
| | 380-3-60 | 127.3 | 175 | 380.7 | 150 | 132.9 | 150 | 344.9 | 150 |
| | 460-3-60 | 105.0 | 125 | 313.0 | 125 | 113.4 | 125 | 287.5 | 125 |
| | 575-3-60 | 85.4 | 110 | 253.0 | 100 | 90.6 | 110 | 232.8 | 100 |
| 115 | 208/230-3-60 | 291.8 | 350 | 683.0 | 350 | 259.2 | 300 | 650.4 | 300 |
| | 380-3-60 | 156.0 | 175 | 368.0 | 175 | 132.9 | 150 | 344.9 | 150 |
| | 460-3-60 | 129.5 | 150 | 303.6 | 150 | 113.4 | 125 | 287.5 | 125 |
| | 575-3-60 | 104.4 | 125 | 246.6 | 125 | 90.6 | 110 | 232.8 | 100 |
| 130 | 208/230-3-60 | 297.8 | 350 | 689.0 | 350 | 321.6 | 400 | 763.8 | 350 |
| | 380-3-60 | 159.9 | 175 | 371.9 | 175 | 168.3 | 200 | 421.7 | 200 |
| | 460-3-60 | 132.4 | 150 | 306.5 | 150 | 142.3 | 175 | 350.3 | 175 |
| | 575-3-60 | 106.8 | 125 | 249.0 | 125 | 115.6 | 125 | 283.2 | 125 |
| 150 | 208/230-3-60 | 366.2 | 450 | 808.4 | 400 | 321.6 | 400 | 763.8 | 350 |
| | 380-3-60 | 199.2 | 225 | 452.6 | 225 | 168.3 | 200 | 421.7 | 200 |
| | 460-3-60 | 164.2 | 200 | 372.2 | 175 | 142.3 | 175 | 350.3 | 175 |
| | 575-3-60 | 134.2 | 150 | 301.8 | 150 | 115.6 | 125 | 283.2 | 125 |

LEGEND

**ICF** — Instantaneous Current Flow
**MCA** — Minimum Circuit Amps
**MOCP** — Maximum Overcurrent Protection

NOTES:

1. Units are suitable for use on electrical systems where voltage supplied to the unit terminals is not below or above the listed minimum and maximum limits. Maximum allowable phase imbalance is: voltage 2%; amps 10%.
2. All units/modules have single point primary power connection. (Each unit/module requires its own power supply.) Main power must be supplied from a field-supplied disconnect.
3. Cooler heater is wired into the control circuit so it is always operable as long as the power supply disconnect and heater safety device are on.
4. Power draw control circuits include both crankcase heaters (sizes 070-150 only) and cooler heaters (where used). Each compressor on sizes 070-090 has a crankcase heater which draws 90 watts of power, while each compressor on sizes 100-150 has a crankcase heater which draws 56 watts of power.
5. 30RAP chillers with Greenspeed® intelligence are not available on unit sizes 010, 015, and 070-150.

## 30RAP ELECTRICAL DATA (cont)
### DUAL POINT, HYDRONIC PACKAGE WITH STANDARD LOW-SOUND AEROACOUSTIC™ FAN (60 Hz ONLY) (cont)

| 30RAP UNIT SIZE | VOLTAGE V-Ph-Hz | PUMP SIZE 7.5 hp CIRCUIT 1 | | | | PUMP SIZE 7.5 hp CIRCUIT 2 | | | |
|---|---|---|---|---|---|---|---|---|---|
| | | MCA | MOCP | ICF | REC FUSE | MCA | MOCP | ICF | REC FUSE |
| 070 | 208/230-3-60 | 155.6 | 200 | 425.8 | 175 | 199.9 | 250 | 470.1 | 225 |
| | 380-3-60 | 96.0 | 125 | 249.5 | 110 | 120.9 | 150 | 274.4 | 150 |
| | 460-3-60 | 75.0 | 100 | 220.4 | 90 | 96.1 | 110 | 241.5 | 110 |
| | 575-3-60 | 65.3 | 80 | 167.7 | 80 | 84.0 | 100 | 186.4 | 90 |
| 080 | 208/230-3-60 | 202.7 | 250 | 438.6 | 225 | 199.9 | 250 | 470.1 | 225 |
| | 380-3-60 | 110.8 | 125 | 216.2 | 125 | 120.9 | 150 | 274.4 | 150 |
| | 460-3-60 | 92.5 | 110 | 213.6 | 100 | 96.1 | 110 | 241.5 | 110 |
| | 575-3-60 | 79.1 | 90 | 163.2 | 90 | 84.0 | 100 | 186.4 | 90 |
| 090 | 208/230-3-60 | 217.4 | 250 | 487.6 | 250 | 199.9 | 250 | 470.1 | 225 |
| | 380-3-60 | 133.9 | 150 | 287.4 | 150 | 120.9 | 150 | 274.4 | 150 |
| | 460-3-60 | 104.8 | 125 | 250.2 | 125 | 96.1 | 110 | 241.5 | 110 |
| | 575-3-60 | 91.4 | 110 | 193.8 | 100 | 84.0 | 100 | 186.4 | 90 |
| 100 | 208/230-3-60 | 234.8 | 300 | 677.0 | 300 | 262.3 | 300 | 653.5 | 300 |
| | 380-3-60 | 127.3 | 175 | 380.7 | 150 | 135.2 | 150 | 347.2 | 150 |
| | 460-3-60 | 105.0 | 125 | 313.0 | 125 | 115.0 | 125 | 289.1 | 125 |
| | 575-3-60 | 85.4 | 110 | 253.0 | 100 | 92.2 | 110 | 234.4 | 100 |
| 115 | 208/230-3-60 | 291.8 | 350 | 683.0 | 350 | 262.3 | 300 | 653.5 | 300 |
| | 380-3-60 | 156.0 | 175 | 368.0 | 175 | 135.2 | 150 | 347.2 | 150 |
| | 460-3-60 | 129.5 | 150 | 303.6 | 150 | 115.0 | 125 | 289.1 | 125 |
| | 575-3-60 | 104.4 | 125 | 246.6 | 125 | 92.2 | 110 | 234.4 | 100 |
| 130 | 208/230-3-60 | 297.8 | 350 | 689.0 | 350 | 324.7 | 400 | 766.9 | 350 |
| | 380-3-60 | 159.9 | 175 | 371.9 | 175 | 170.6 | 200 | 424.0 | 200 |
| | 460-3-60 | 132.4 | 150 | 306.5 | 150 | 143.9 | 175 | 351.9 | 175 |
| | 575-3-60 | 106.8 | 125 | 249.0 | 125 | 117.2 | 150 | 284.8 | 150 |
| 150 Dual Pump | 208/230-3-60 | 366.2 | 450 | 808.4 | 400 | 324.7 | 400 | 766.9 | 350 |
| | 380-3-60 | 199.2 | 225 | 452.6 | 225 | 170.6 | 200 | 424.0 | 200 |
| | 460-3-60 | 164.2 | 200 | 372.2 | 175 | 143.9 | 175 | 351.9 | 175 |
| | 575-3-60 | 134.2 | 150 | 301.8 | 150 | 117.2 | 150 | 284.8 | 150 |
| 150 Single Pump | 208/230-3-60 | 366.2 | 450 | 808.4 | 400 | 328.2 | 400 | 770.4 | 350 |
| | 380-3-60 | 199.2 | 225 | 452.6 | 225 | 172.5 | 200 | 425.9 | 200 |
| | 460-3-60 | 164.2 | 200 | 372.2 | 175 | 145.3 | 175 | 353.3 | 175 |
| | 575-3-60 | 134.2 | 150 | 301.8 | 150 | 118.3 | 150 | 285.9 | 150 |

| 30RAP UNIT SIZE | VOLTAGE V-Ph-Hz | PUMP SIZE 10.0 hp CIRCUIT 1 | | | | PUMP SIZE 10.0 hp CIRCUIT 2 | | | |
|---|---|---|---|---|---|---|---|---|---|
| | | MCA | MOCP | ICF | REC FUSE | MCA | MOCP | ICF | REC FUSE |
| 070 | 208/230-3-60 | 155.6 | 200 | 425.8 | 175 | 206.4 | 250 | 476.6 | 225 |
| | 380-3-60 | 96.0 | 125 | 249.5 | 110 | 124.5 | 150 | 278.0 | 150 |
| | 460-3-60 | 75.0 | 100 | 220.4 | 90 | 98.9 | 125 | 244.3 | 110 |
| | 575-3-60 | 65.3 | 80 | 167.7 | 80 | 86.2 | 100 | 188.6 | 100 |
| 080 | 208/230-3-60 | 202.7 | 250 | 438.6 | 225 | 206.4 | 250 | 476.6 | 225 |
| | 380-3-60 | 110.8 | 125 | 216.2 | 125 | 124.5 | 150 | 278.0 | 150 |
| | 460-3-60 | 92.5 | 110 | 213.6 | 100 | 98.9 | 125 | 244.3 | 110 |
| | 575-3-60 | 79.1 | 90 | 163.2 | 90 | 86.2 | 100 | 188.6 | 100 |
| 090 | 208/230-3-60 | 217.4 | 250 | 487.6 | 250 | 206.4 | 250 | 476.6 | 225 |
| | 380-3-60 | 133.9 | 150 | 287.4 | 150 | 124.5 | 150 | 278.0 | 150 |
| | 460-3-60 | 104.8 | 125 | 250.2 | 125 | 98.9 | 125 | 244.3 | 110 |
| | 575-3-60 | 91.4 | 110 | 193.8 | 100 | 86.2 | 100 | 188.6 | 100 |
| 100 | 208/230-3-60 | 234.8 | 300 | 677.0 | 300 | 268.8 | 300 | 660.0 | 300 |
| | 380-3-60 | 127.3 | 175 | 380.7 | 150 | 138.8 | 175 | 350.8 | 150 |
| | 460-3-60 | 105.0 | 125 | 313.0 | 125 | 117.8 | 150 | 291.9 | 150 |
| | 575-3-60 | 85.4 | 110 | 253.0 | 100 | 94.4 | 110 | 236.6 | 110 |
| 115 | 208/230-3-60 | 291.8 | 350 | 683.0 | 350 | 268.8 | 300 | 660.0 | 300 |
| | 380-3-60 | 156.0 | 175 | 368.0 | 175 | 138.8 | 175 | 350.8 | 150 |
| | 460-3-60 | 129.5 | 150 | 303.6 | 150 | 117.8 | 150 | 291.9 | 150 |
| | 575-3-60 | 104.4 | 125 | 246.6 | 125 | 94.4 | 110 | 236.6 | 110 |
| 130 | 208/230-3-60 | 297.8 | 350 | 689.0 | 350 | 331.2 | 400 | 773.4 | 400 |
| | 380-3-60 | 159.9 | 175 | 371.9 | 175 | 174.2 | 225 | 427.6 | 200 |
| | 460-3-60 | 132.4 | 150 | 306.5 | 150 | 146.7 | 175 | 354.7 | 150 |
| | 575-3-60 | 106.8 | 125 | 249.0 | 125 | 119.4 | 150 | 287.0 | 150 |
| 150 | 208/230-3-60 | 366.2 | 450 | 808.4 | 400 | 331.2 | 400 | 773.4 | 400 |
| | 380-3-60 | 199.2 | 225 | 452.6 | 225 | 174.2 | 225 | 427.6 | 200 |
| | 460-3-60 | 164.2 | 200 | 372.2 | 175 | 146.7 | 175 | 354.7 | 150 |
| | 575-3-60 | 134.2 | 150 | 301.8 | 150 | 119.4 | 150 | 287.0 | 150 |

LEGEND

**ICF** — Instantaneous Current Flow
**MCA** — Minimum Circuit Amps
**MOCP** — Maximum Overcurrent Protection

NOTES:
1. Units are suitable for use on electrical systems where voltage supplied to the unit terminals is not below or above the listed minimum and maximum limits. Maximum allowable phase imbalance is: voltage 2%; amps 10%.
2. All units/modules have single point primary power connection. (Each unit/module requires its own power supply.) Main power must be supplied from a field-supplied disconnect.
3. Cooler heater is wired into the control circuit so it is always operable as long as the power supply disconnect and heater safety device are on.
4. Power draw control circuits include both crankcase heaters (sizes 070-150 only) and cooler heaters (where used). Each compressor on sizes 070-090 has a crankcase heater which draws 90 watts of power, while each compressor on sizes 100-150 has a crankcase heater which draws 56 watts of power.
5. 30RAP chillers with Greenspeed® intelligence are not available on unit sizes 010, 015, and 070-150.

## 30RAP ELECTRICAL DATA (cont)

### DUAL POINT, HYDRONIC PACKAGE WITH STANDARD LOW-SOUND AEROACOUSTIC™ FAN (60 Hz ONLY) (cont)

| 30RAP UNIT SIZE | VOLTAGE V-Ph-Hz | PUMP SIZE 15.0 hp CIRCUIT 1 | | | | PUMP SIZE 15.0 hp CIRCUIT 2 | | | |
|---|---|---|---|---|---|---|---|---|---|
| | | MCA | MOCP | ICF | REC FUSE | MCA | MOCP | ICF | REC FUSE |
| 070 | 208/230-3-60 | — | — | — | — | — | — | — | — |
| | 380-3-60 | — | — | — | — | — | — | — | — |
| | 460-3-60 | — | — | — | — | — | — | — | — |
| | 575-3-60 | — | — | — | — | — | — | — | — |
| 080 | 208/230-3-60 | 202.7 | 250 | 438.6 | 225 | 218.1 | 250 | 488.3 | 250 |
| | 380-3-60 | 110.8 | 125 | 216.2 | 125 | 131.5 | 150 | 285.0 | 150 |
| | 460-3-60 | 92.5 | 110 | 213.6 | 100 | 104.4 | 125 | 249.8 | 125 |
| | 575-3-60 | 79.1 | 90 | 163.2 | 90 | 91.0 | 110 | 193.4 | 100 |
| 090 | 208/230-3-60 | 217.4 | 250 | 487.6 | 250 | 218.1 | 250 | 488.3 | 250 |
| | 380-3-60 | 133.9 | 150 | 287.4 | 150 | 131.5 | 150 | 285.0 | 150 |
| | 460-3-60 | 104.8 | 125 | 250.2 | 125 | 104.4 | 125 | 249.8 | 125 |
| | 575-3-60 | 91.4 | 110 | 193.8 | 100 | 91.0 | 110 | 193.4 | 100 |
| 100 | 208/230-3-60 | 234.8 | 300 | 677.0 | 300 | 280.5 | 350 | 671.7 | 300 |
| | 380-3-60 | 127.3 | 175 | 380.7 | 150 | 145.8 | 175 | 357.8 | 175 |
| | 460-3-60 | 105.0 | 125 | 313.0 | 125 | 123.3 | 150 | 297.4 | 150 |
| | 575-3-60 | 85.4 | 110 | 253.0 | 100 | 99.2 | 125 | 241.4 | 110 |
| 115 | 208/230-3-60 | 291.8 | 350 | 683.0 | 350 | 280.5 | 350 | 671.7 | 300 |
| | 380-3-60 | 156.0 | 175 | 368.0 | 175 | 145.8 | 175 | 357.8 | 175 |
| | 460-3-60 | 129.5 | 150 | 303.6 | 150 | 123.3 | 150 | 297.4 | 150 |
| | 575-3-60 | 104.4 | 125 | 246.6 | 125 | 99.2 | 125 | 241.4 | 110 |
| 130 | 208/230-3-60 | 297.8 | 350 | 689.0 | 350 | 342.9 | 400 | 785.1 | 400 |
| | 380-3-60 | 159.9 | 175 | 371.9 | 175 | 181.2 | 225 | 434.6 | 200 |
| | 460-3-60 | 132.4 | 150 | 306.5 | 150 | 152.2 | 175 | 360.2 | 175 |
| | 575-3-60 | 106.8 | 125 | 249.0 | 125 | 124.2 | 150 | 291.8 | 150 |
| 150 | 208/230-3-60 | 366.2 | 450 | 808.4 | 400 | 342.9 | 400 | 785.1 | 400 |
| | 380-3-60 | 199.2 | 225 | 452.6 | 225 | 181.2 | 225 | 434.6 | 200 |
| | 460-3-60 | 164.2 | 200 | 372.2 | 175 | 152.2 | 175 | 360.2 | 175 |
| | 575-3-60 | 134.2 | 150 | 301.8 | 150 | 124.2 | 150 | 291.8 | 150 |

LEGEND

**ICF** — Instantaneous Current Flow
**MCA** — Minimum Circuit Amps
**MOCP** — Maximum Overcurrent Protection

NOTES:

1. Units are suitable for use on electrical systems where voltage supplied to the unit terminals is not below or above the listed minimum and maximum limits. Maximum allowable phase imbalance is: voltage 2%; amps 10%.
2. All units/modules have dual point primary power connection. (Each unit / module requires its own power supply.) Main power must be supplied from a field-supplied disconnect.
3. Cooler heater is wired into the control circuit so it is always operable as long as the power supply disconnect and heater safety device are on.
4. Power draw control circuits include both crankcase heaters (sizes 070-150 only) and cooler heaters (where used). Each compressor on sizes 070-090 has a crankcase heater which draws 90 watts of power, while each compressor on sizes 100-150 has a crankcase heater which draws 56 watts of power.
5. 30RAP chillers with Greenspeed® intelligence are not available on unit sizes 010, 015, and 070-150.

## 30RAP ELECTRICAL DATA (cont)

### SINGLE POINT, HYDRONIC PACKAGE WITH OPTIONAL VALUE SOUND FANS (60 Hz ONLY), UNIT SIZES 010-060

| 30RAP UNIT SIZE | VOLTAGE V-Hz (3 Ph) | PUMP SIZE 1.5 hp | | | | PUMP SIZE 3.0 hp | | | | PUMP SIZE 5.0 hp | | | |
|---|---|---|---|---|---|---|---|---|---|---|---|---|---|
| | | MCA | MOCP | ICF | REC FUSE | MCA | MOCP | ICF | REC FUSE | MCA | MOCP | ICF | REC FUSE |
| 010 | 208/230-60 | 71.0 | 110 | 255.9 | 90 | 74.6 | 110 | 259.5 | 90 | 79.3 | 125 | 264.2 | 100 |
| | 380-60 | 35.9 | 50 | 151.3 | 45 | 37.9 | 60 | 153.3 | 45 | 40.5 | 60 | 155.9 | 50 |
| | 460-60 | 28.7 | 45 | 130.4 | 35 | 30.3 | 45 | 132.0 | 35 | 32.4 | 50 | 134.1 | 40 |
| | 575-60 | 22.6 | 35 | 104.2 | 30 | 24.0 | 35 | 105.6 | 30 | 25.6 | 40 | 107.2 | 30 |
| 011 | 208/230-60 | 55.9 | 70 | 190.9 | 70 | 59.5 | 80 | 194.5 | 70 | 64.2 | 80 | 199.2 | 70 |
| | 380-60 | 30.1 | 40 | 87.8 | 35 | 32.1 | 40 | 89.8 | 35 | 34.7 | 45 | 92.4 | 40 |
| | 460-60 | 27.2 | 35 | 88.2 | 30 | 28.8 | 40 | 89.8 | 35 | 30.9 | 40 | 91.9 | 35 |
| | 575-60 | 19.8 | 25 | 63.9 | 25 | 21.2 | 25 | 65.3 | 25 | 22.8 | 30 | 66.9 | 25 |
| 015 | 208/230-60 | 80.7 | 125 | 350.9 | 100 | 84.3 | 125 | 354.5 | 100 | 89.0 | 125 | 359.2 | 110 |
| | 380-60 | 48.8 | 80 | 202.3 | 60 | 50.8 | 80 | 204.3 | 60 | 53.4 | 80 | 206.9 | 70 |
| | 460-60 | 39.0 | 60 | 184.4 | 50 | 40.6 | 60 | 186.0 | 50 | 42.7 | 60 | 188.1 | 50 |
| | 575-60 | 33.8 | 50 | 136.2 | 40 | 35.2 | 50 | 137.6 | 45 | 36.8 | 60 | 139.2 | 45 |
| 016 | 208/230-60 | 69.4 | 90 | 274.1 | 80 | 73.0 | 100 | 277.7 | 90 | 77.7 | 100 | 282.4 | 90 |
| | 380-60 | 38.5 | 50 | 153.5 | 45 | 40.5 | 50 | 155.5 | 45 | 43.1 | 50 | 158.1 | 50 |
| | 460-60 | 35.0 | 45 | 146.6 | 40 | 36.6 | 50 | 148.2 | 45 | 38.7 | 50 | 150.3 | 45 |
| | 575-60 | 26.2 | 35 | 105.8 | 30 | 27.6 | 35 | 107.2 | 35 | 29.2 | 40 | 108.8 | 35 |
| 018 | 208/230-60 | 92.7 | 125 | 275.9 | 110 | 96.3 | 125 | 279.5 | 110 | 101.0 | 125 | 284.2 | 110 |
| | 380-60 | 53.5 | 70 | 169.4 | 60 | 55.5 | 70 | 171.4 | 70 | 58.1 | 70 | 174.0 | 70 |
| | 460-60 | 46.3 | 60 | 139.4 | 60 | 47.9 | 60 | 141.0 | 60 | 50.0 | 60 | 143.1 | 60 |
| | 575-60 | 36.9 | 50 | 100.2 | 45 | 38.3 | 50 | 101.6 | 45 | 39.9 | 50 | 103.2 | 45 |
| 020 | 208/230-60 | 98.1 | 125 | 292.3 | 110 | 101.7 | 125 | 295.9 | 125 | 106.4 | 125 | 300.6 | 125 |
| | 380-60 | 63.6 | 80 | 178.9 | 70 | 65.6 | 80 | 180.9 | 80 | 68.2 | 90 | 183.5 | 80 |
| | 460-60 | 49.0 | 60 | 151.6 | 60 | 50.6 | 60 | 153.2 | 60 | 52.7 | 70 | 155.3 | 60 |
| | 575-60 | 39.0 | 50 | 101.1 | 45 | 40.4 | 50 | 102.5 | 45 | 42.0 | 50 | 104.1 | 50 |
| 025 | 208/230-60 | 132.9 | 175 | 368.8 | 150 | 136.5 | 175 | 372.4 | 150 | 141.2 | 175 | 377.1 | 175 |
| | 380-60 | 70.7 | 90 | 176.1 | 80 | 72.7 | 90 | 178.1 | 80 | 75.3 | 100 | 180.7 | 90 |
| | 460-60 | 60.7 | 80 | 181.8 | 70 | 62.3 | 80 | 183.4 | 70 | 64.4 | 80 | 185.5 | 80 |
| | 575-60 | 51.6 | 70 | 135.7 | 60 | 53.0 | 70 | 137.1 | 60 | 54.6 | 70 | 138.7 | 60 |
| 030 | 208/230-60 | 143.1 | 175 | 413.3 | 175 | 146.7 | 200 | 416.9 | 175 | 151.4 | 200 | 421.6 | 175 |
| | 380-60 | 86.7 | 110 | 240.2 | 100 | 88.7 | 110 | 242.2 | 100 | 91.3 | 125 | 244.8 | 100 |
| | 460-60 | 69.2 | 90 | 214.6 | 80 | 70.8 | 90 | 216.2 | 80 | 72.9 | 90 | 218.3 | 80 |
| | 575-60 | 60.1 | 80 | 162.5 | 70 | 61.5 | 80 | 163.9 | 70 | 63.1 | 80 | 165.5 | 70 |
| 035 | 208/230-60 | — | — | — | — | 175.1 | 200 | 369.3 | 200 | 179.8 | 200 | 374.0 | 200 |
| | 380-60 | — | — | — | — | 107.9 | 125 | 223.2 | 125 | 110.5 | 125 | 225.9 | 125 |
| | 460-60 | — | — | — | — | 87.3 | 100 | 189.9 | 100 | 89.4 | 100 | 192.0 | 100 |
| | 575-60 | — | — | — | — | 69.7 | 80 | 131.8 | 80 | 71.3 | 80 | 133.4 | 80 |
| 040 | 208/230-60 | — | — | — | — | 207.5 | 250 | 404.7 | 225 | 212.2 | 250 | 409.4 | 225 |
| | 380-60 | — | — | — | — | 116.9 | 125 | 232.2 | 125 | 119.5 | 125 | 234.8 | 125 |
| | 460-60 | — | — | — | — | 91.3 | 100 | 193.7 | 100 | 93.4 | 110 | 195.8 | 100 |
| | 575-60 | — | — | — | — | 72.5 | 80 | 154.5 | 80 | 74.1 | 80 | 156.1 | 80 |
| 045 | 208/230-60 | — | — | — | — | 239.3 | 250 | 478.4 | 250 | 244.0 | 250 | 483.1 | 250 |
| | 380-60 | — | — | — | — | 124.0 | 150 | 232.6 | 150 | 126.6 | 150 | 235.2 | 150 |
| | 460-60 | — | — | — | — | 102.8 | 125 | 228.4 | 110 | 104.9 | 125 | 230.5 | 125 |
| | 575-60 | — | — | — | — | 85.0 | 100 | 174.3 | 90 | 86.6 | 100 | 175.9 | 100 |
| 050 | 208/230-60 | — | — | — | — | 245.7 | 250 | 481.6 | 250 | 250.4 | 300 | 486.3 | 300 |
| | 380-60 | — | — | — | — | 130.4 | 150 | 235.8 | 150 | 133.0 | 150 | 238.4 | 150 |
| | 460-60 | — | — | — | — | 111.8 | 125 | 232.9 | 125 | 113.9 | 125 | 235.0 | 125 |
| | 575-60 | — | — | — | — | 95.4 | 110 | 179.5 | 110 | 97.0 | 110 | 181.1 | 110 |
| 055 | 208/230-60 | — | — | — | — | 262.5 | 300 | 537.2 | 300 | 267.2 | 300 | 541.9 | 300 |
| | 380-60 | — | — | — | — | 150.3 | 175 | 310.9 | 175 | 152.9 | 175 | 313.5 | 175 |
| | 460-60 | — | — | — | — | 123.6 | 150 | 272.8 | 150 | 125.7 | 150 | 274.9 | 150 |
| | 575-60 | — | — | — | — | 106.5 | 125 | 212.7 | 125 | 108.1 | 125 | 214.3 | 125 |
| 060 | 208/230-60 | — | — | — | — | 271.5 | 300 | 541.7 | 300 | 276.2 | 300 | 546.4 | 300 |
| | 380-60 | — | — | — | — | 164.5 | 175 | 318.0 | 175 | 167.1 | 200 | 320.6 | 200 |
| | 460-60 | — | — | — | — | 131.2 | 150 | 276.6 | 150 | 133.3 | 150 | 278.7 | 150 |
| | 575-60 | — | — | — | — | 114.1 | 125 | 216.5 | 125 | 115.7 | 125 | 218.1 | 125 |

LEGEND

**ICF** — Instantaneous Current Flow
**MCA** — Minimum Circuit Amps
**MOCP** — Maximum Overcurrent Protection

NOTES:

1. Units are suitable for use on electrical systems where voltage supplied to the unit terminals is not below or above the listed minimum and maximum limits. Maximum allowable phase imbalance is: voltage 2%; amps 10%.
2. All units/modules have single point primary power connection. (Each unit/module requires its own power supply.) Main power must be supplied from a field-supplied disconnect.
3. Cooler heater is wired into the control circuit so it is always operable as long as the power supply disconnect and heater safety device are on.
4. Power draw control circuits include both crankcase heaters (sizes 070-150 only) and cooler heaters (where used). Each compressor on sizes 070-090 has a crankcase heater which draws 90 watts of power, while each compressor on sizes 100-150 has a crankcase heater which draws 56 watts of power.
5. 30RAP chillers with Greenspeed® intelligence are not available on unit sizes 010, 015, and 070-150.

## 30RAP ELECTRICAL DATA (cont)

### SINGLE POINT, HYDRONIC PACKAGE WITH OPTIONAL VALUE SOUND FANS (60 Hz ONLY), UNIT SIZES 070-150

| 30RAP UNIT SIZE | VOLTAGE V-Hz (3 Ph) | PUMP SIZE 1.5 hp | | | | PUMP SIZE 3.0 hp | | | | PUMP SIZE 5.0 hp | | | |
|---|---|---|---|---|---|---|---|---|---|---|---|---|---|
| | | MCA | MOCP | ICF | REC FUSE | MCA | MOCP | ICF | REC FUSE | MCA | MOCP | ICF | REC FUSE |
| 070 | 208/230-60 | — | — | — | — | 335.1 | 350 | 605.3 | 350 | 341.4 | 350 | 611.6 | 350 |
| | 380-60 | — | — | — | — | 203.1 | 225 | 356.6 | 225 | 206.1 | 225 | 359.6 | 225 |
| | 460-60 | — | — | — | — | 161.9 | 175 | 307.3 | 175 | 164.8 | 175 | 310.2 | 175 |
| | 575-60 | — | — | — | — | 140.7 | 150 | 243.1 | 150 | 142.8 | 150 | 245.2 | 150 |
| 080 | 208/230-60 | — | — | — | — | — | — | — | — | 390.3 | 400 | 660.5 | 400 |
| | 380-60 | — | — | — | — | — | — | — | — | 222.7 | 250 | 376.2 | 250 |
| | 460-60 | — | — | — | — | — | — | — | — | 183.6 | 200 | 329.0 | 200 |
| | 575-60 | — | — | — | — | — | — | — | — | 157.7 | 175 | 260.1 | 175 |
| 090 | 208/230-60 | — | — | — | — | — | — | — | — | 403.8 | 450 | 674.0 | 450 |
| | 380-60 | — | — | — | — | — | — | — | — | 244.0 | 250 | 397.5 | 250 |
| | 460-60 | — | — | — | — | — | — | — | — | 195.0 | 200 | 340.4 | 200 |
| | 575-60 | — | — | — | — | — | — | — | — | 169.1 | 175 | 271.5 | 175 |
| 100 | 208/230-60 | — | — | — | — | — | — | — | — | 479.4 | 500 | 921.6 | 500 |
| | 380-60 | — | — | — | — | — | — | — | — | 250.6 | 300 | 504.0 | 300 |
| | 460-60 | — | — | — | — | — | — | — | — | 213.0 | 250 | 421.0 | 225 |
| | 575-60 | — | — | — | — | — | — | — | — | 170.8 | 200 | 338.4 | 200 |
| 115 | 208/230-60 | — | — | — | — | — | — | — | — | 537.0 | 600 | 928.2 | 600 |
| | 380-60 | — | — | — | — | — | — | — | — | 279.3 | 300 | 491.3 | 300 |
| | 460-60 | — | — | — | — | — | — | — | — | 237.9 | 250 | 412.0 | 250 |
| | 575-60 | — | — | — | — | — | — | — | — | 190.0 | 200 | 332.2 | 200 |
| 130 | 208/230-60 | — | — | — | — | — | — | — | — | 606.0 | 700 | 1048.2 | 700 |
| | 380-60 | — | — | — | — | — | — | — | — | 318.6 | 350 | 572.0 | 350 |
| | 460-60 | — | — | — | — | — | — | — | — | 270.1 | 300 | 478.1 | 300 |
| | 575-60 | — | — | — | — | — | — | — | — | 217.6 | 250 | 385.2 | 250 |
| 150 | 208/230-60 | — | — | — | — | — | — | — | — | 670.2 | 700 | 1112.4 | 700 |
| | 380-60 | — | — | — | — | — | — | — | — | 355.2 | 400 | 608.6 | 400 |
| | 460-60 | — | — | — | — | — | — | — | — | 300.1 | 350 | 508.1 | 350 |
| | 575-60 | — | — | — | — | — | — | — | — | 243.3 | 250 | 410.9 | 250 |

LEGEND

**ICF** — Instantaneous Current Flow
**MCA** — Minimum Circuit Amps
**MOCP** — Maximum Overcurrent Protection

NOTES:

1. Units are suitable for use on electrical systems where voltage supplied to the unit terminals is not below or above the listed minimum and maximum limits. Maximum allowable phase imbalance is: voltage 2%; amps 10%.
2. All units/modules have single point primary power connection. (Each unit/module requires its own power supply.) Main power must be supplied from a field-supplied disconnect.
3. Cooler heater is wired into the control circuit so it is always operable as long as the power supply disconnect and heater safety device are on.
4. Power draw control circuits include both crankcase heaters (sizes 070-150 only) and cooler heaters (where used). Each compressor on sizes 070-090 has a crankcase heater which draws 90 watts of power, while each compressor on sizes 100-150 has a crankcase heater which draws 56 watts of power.
5. 30RAP chillers with Greenspeed® intelligence are not available on unit sizes 010, 015, and 070-150.

## 30RAP ELECTRICAL DATA (cont)

### SINGLE POINT, HYDRONIC PACKAGE WITH OPTIONAL VALUE SOUND FANS (60 Hz ONLY) UNIT SIZES 010-060 (cont)

| 30RAP UNIT SIZE | VOLTAGE V-Hz (3 Ph) | PUMP SIZE 7.5 hp | | | | PUMP SIZE 10.0 hp | | | | PUMP SIZE 15.0 hp | | | |
|---|---|---|---|---|---|---|---|---|---|---|---|---|---|
| | | MCA | MOCP | ICF | REC FUSE | MCA | MOCP | ICF | REC FUSE | MCA | MOCP | ICF | REC FUSE |
| 010 | 208/230-60 | — | — | — | — | — | — | — | — | — | — | — | — |
| | 380-60 | — | — | — | — | — | — | — | — | — | — | — | — |
| | 460-60 | — | — | — | — | — | — | — | — | — | — | — | — |
| | 575-60 | — | — | — | — | — | — | — | — | — | — | — | — |
| 011 | 208/230-60 | — | — | — | — | — | — | — | — | — | — | — | — |
| | 380-60 | — | — | — | — | — | — | — | — | — | — | — | — |
| | 460-60 | — | — | — | — | — | — | — | — | — | — | — | — |
| | 575-60 | — | — | — | — | — | — | — | — | — | — | — | — |
| 015 | 208/230-60 | — | — | — | — | — | — | — | — | — | — | — | — |
| | 380-60 | — | — | — | — | — | — | — | — | — | — | — | — |
| | 460-60 | — | — | — | — | — | — | — | — | — | — | — | — |
| | 575-60 | — | — | — | — | — | — | — | — | — | — | — | — |
| 016 | 208/230-60 | — | — | — | — | — | — | — | — | — | — | — | — |
| | 380-60 | — | — | — | — | — | — | — | — | — | — | — | — |
| | 460-60 | — | — | — | — | — | — | — | — | — | — | — | — |
| | 575-60 | — | — | — | — | — | — | — | — | — | — | — | — |
| 018 | 208/230-60 | — | — | — | — | — | — | — | — | — | — | — | — |
| | 380-60 | — | — | — | — | — | — | — | — | — | — | — | — |
| | 460-60 | — | — | — | — | — | — | — | — | — | — | — | — |
| | 575-60 | — | — | — | — | — | — | — | — | — | — | — | — |
| 020 | 208/230-60 | — | — | — | — | — | — | — | — | — | — | — | — |
| | 380-60 | — | — | — | — | — | — | — | — | — | — | — | — |
| | 460-60 | — | — | — | — | — | — | — | — | — | — | — | — |
| | 575-60 | — | — | — | — | — | — | — | — | — | — | — | — |
| 025 | 208/230-60 | — | — | — | — | — | — | — | — | — | — | — | — |
| | 380-60 | — | — | — | — | — | — | — | — | — | — | — | — |
| | 460-60 | — | — | — | — | — | — | — | — | — | — | — | — |
| | 575-60 | — | — | — | — | — | — | — | — | — | — | — | — |
| 030 | 208/230-60 | — | — | — | — | — | — | — | — | — | — | — | — |
| | 380-60 | — | — | — | — | — | — | — | — | — | — | — | — |
| | 460-60 | — | — | — | — | — | — | — | — | — | — | — | — |
| | 575-60 | — | — | — | — | — | — | — | — | — | — | — | — |
| 035 | 208/230-60 | 185.7 | 200 | 379.9 | 200 | — | — | — | — | — | — | — | — |
| | 380-60 | 113.9 | 125 | 229.3 | 125 | — | — | — | — | — | — | — | — |
| | 460-60 | 92.3 | 110 | 194.9 | 100 | — | — | — | — | — | — | — | — |
| | 575-60 | 73.7 | 80 | 135.8 | 80 | — | — | — | — | — | — | — | — |
| 040 | 208/230-60 | 218.1 | 250 | 415.3 | 250 | — | — | — | — | — | — | — | — |
| | 380-60 | 122.9 | 125 | 238.2 | 125 | — | — | — | — | — | — | — | — |
| | 460-60 | 96.3 | 110 | 198.7 | 110 | — | — | — | — | — | — | — | — |
| | 575-60 | 76.5 | 90 | 158.5 | 90 | — | — | — | — | — | — | — | — |
| 045 | 208/230-60 | 249.9 | 300 | 489.0 | 300 | — | — | — | — | — | — | — | — |
| | 380-60 | 130.0 | 150 | 238.6 | 150 | — | — | — | — | — | — | — | — |
| | 460-60 | 107.8 | 125 | 233.4 | 125 | — | — | — | — | — | — | — | — |
| | 575-60 | 89.0 | 100 | 178.3 | 100 | — | — | — | — | — | — | — | — |
| 050 | 208/230-60 | 256.3 | 300 | 492.2 | 300 | 262.8 | 300 | 498.7 | 300 | — | — | — | — |
| | 380-60 | 136.4 | 150 | 241.8 | 150 | 140.0 | 150 | 245.4 | 150 | — | — | — | — |
| | 460-60 | 116.8 | 125 | 237.9 | 125 | 119.6 | 125 | 240.7 | 125 | — | — | — | — |
| | 575-60 | 99.4 | 110 | 183.5 | 110 | 101.6 | 110 | 185.7 | 110 | — | — | — | — |
| 055 | 208/230-60 | 273.1 | 300 | 547.8 | 300 | 279.6 | 300 | 554.3 | 300 | — | — | — | — |
| | 380-60 | 156.3 | 175 | 316.9 | 175 | 159.9 | 175 | 320.5 | 175 | — | — | — | — |
| | 460-60 | 128.6 | 150 | 277.8 | 150 | 131.4 | 150 | 280.6 | 150 | — | — | — | — |
| | 575-60 | 110.5 | 125 | 216.7 | 125 | 112.7 | 125 | 218.9 | 125 | — | — | — | — |
| 060 | 208/230-60 | 282.1 | 300 | 552.3 | 300 | 288.6 | 300 | 558.8 | 300 | — | — | — | — |
| | 380-60 | 170.5 | 200 | 324.0 | 200 | 174.1 | 200 | 327.6 | 200 | — | — | — | — |
| | 460-60 | 136.2 | 150 | 281.6 | 150 | 139.0 | 150 | 284.4 | 150 | — | — | — | — |
| | 575-60 | 118.1 | 125 | 220.5 | 125 | 120.3 | 125 | 222.7 | 125 | — | — | — | — |

LEGEND

**ICF** — Instantaneous Current Flow
**MCA** — Minimum Circuit Amps
**MOCP** — Maximum Overcurrent Protection

NOTES:
1. Units are suitable for use on electrical systems where voltage supplied to the unit terminals is not below or above the listed minimum and maximum limits. Maximum allowable phase imbalance is: voltage 2%; amps 10%.
2. All units/modules have single point primary power connection. (Each unit/module requires its own power supply.) Main power must be supplied from a field-supplied disconnect.
3. Cooler heater is wired into the control circuit so it is always operable as long as the power supply disconnect and heater safety device are on.
4. Power draw control circuits include both crankcase heaters (sizes 070-150 only) and cooler heaters (where used). Each compressor on sizes 070-090 has a crankcase heater which draws 90 watts of power, while each compressor on sizes 100-150 has a crankcase heater which draws 56 watts of power.
5. 30RAP chillers with Greenspeed® intelligence are not available on unit sizes 010, 015, and 070-150.

## 30RAP ELECTRICAL DATA (cont)

### SINGLE POINT, HYDRONIC PACKAGE WITH OPTIONAL VALUE SOUND FANS (60 Hz ONLY) UNIT SIZES 070-150 (cont)

| 30RAP UNIT SIZE | VOLTAGE V-Hz (3 Ph) | PUMP SIZE 7.5 hp | | | | PUMP SIZE 10.0 hp | | | | PUMP SIZE 15.0 hp | | | |
|---|---|---|---|---|---|---|---|---|---|---|---|---|---|
| | | MCA | MOCP | ICF | REC FUSE | MCA | MOCP | ICF | REC FUSE | MCA | MOCP | ICF | REC FUSE |
| 070 | 208/230-60 | 344.5 | 400 | 614.7 | 400 | 351.0 | 400 | 621.2 | 400 | — | — | — | — |
| | 380-60 | 208.4 | 225 | 361.9 | 225 | 212.0 | 225 | 365.5 | 225 | — | — | — | — |
| | 460-60 | 166.4 | 175 | 311.8 | 175 | 169.2 | 175 | 314.6 | 175 | — | — | — | — |
| | 575-60 | 144.4 | 150 | 246.8 | 150 | 146.6 | 150 | 249.0 | 150 | — | — | — | — |
| 080 | 208/230-60 | 393.4 | 400 | 663.6 | 400 | 399.9 | 450 | 670.1 | 450 | 411.6 | 450 | 681.8 | 450 |
| | 380-60 | 225.0 | 250 | 378.5 | 250 | 228.6 | 250 | 382.1 | 250 | 235.6 | 250 | 389.1 | 250 |
| | 460-60 | 185.2 | 200 | 330.6 | 200 | 188.0 | 200 | 333.4 | 200 | 193.5 | 200 | 338.9 | 200 |
| | 575-60 | 159.3 | 175 | 261.7 | 175 | 161.5 | 175 | 263.9 | 175 | 166.3 | 175 | 268.7 | 175 |
| 090 | 208/230-60 | 406.9 | 450 | 677.1 | 450 | 413.4 | 450 | 683.6 | 450 | 425.1 | 450 | 695.3 | 450 |
| | 380-60 | 246.3 | 250 | 399.8 | 250 | 249.9 | 250 | 403.4 | 250 | 256.9 | 300 | 410.4 | 300 |
| | 460-60 | 196.6 | 200 | 342.0 | 200 | 199.4 | 225 | 344.8 | 225 | 204.9 | 225 | 350.3 | 225 |
| | 575-60 | 170.7 | 175 | 273.1 | 175 | 172.9 | 175 | 275.3 | 175 | 177.7 | 200 | 280.1 | 200 |
| 100 | 208/230-60 | 482.5 | 500 | 924.7 | 500 | 489.0 | 500 | 931.2 | 500 | 500.7 | 600 | 942.9 | 600 |
| | 380-60 | 252.9 | 300 | 506.3 | 300 | 256.5 | 300 | 509.9 | 300 | 263.5 | 300 | 516.9 | 300 |
| | 460-60 | 214.6 | 250 | 422.6 | 250 | 217.4 | 250 | 425.4 | 250 | 222.9 | 250 | 430.9 | 250 |
| | 575-60 | 172.4 | 200 | 340.0 | 200 | 174.6 | 200 | 342.2 | 200 | 179.4 | 200 | 347.0 | 200 |
| 115 | 208/230-60 | 540.1 | 600 | 931.3 | 600 | 546.6 | 600 | 937.8 | 600 | 558.3 | 600 | 949.5 | 600 |
| | 380-60 | 281.6 | 300 | 493.6 | 300 | 285.2 | 300 | 497.2 | 300 | 292.2 | 300 | 504.2 | 300 |
| | 460-60 | 239.5 | 250 | 413.6 | 250 | 242.3 | 250 | 416.4 | 250 | 247.8 | 250 | 421.9 | 250 |
| | 575-60 | 191.6 | 200 | 333.8 | 200 | 193.8 | 200 | 336.0 | 200 | 198.6 | 200 | 340.8 | 200 |
| 130 | 208/230-60 | 609.1 | 700 | 1051.3 | 700 | 615.6 | 700 | 1057.8 | 700 | 627.3 | 700 | 1069.5 | 700 |
| | 380-60 | 320.9 | 350 | 574.3 | 350 | 324.5 | 350 | 577.9 | 350 | 331.5 | 350 | 584.9 | 350 |
| | 460-60 | 271.7 | 300 | 479.7 | 300 | 274.5 | 300 | 482.5 | 300 | 280.0 | 300 | 488.0 | 300 |
| | 575-60 | 219.2 | 250 | 386.8 | 250 | 221.4 | 250 | 389.0 | 250 | 226.2 | 250 | 393.8 | 250 |
| 150 Dual Pump | 208/230-60 | 673.3 | 700 | 1115.5 | 700 | 679.8 | 700 | 1122.0 | 700 | 691.5 | 700 | 1133.7 | 700 |
| | 380-60 | 357.5 | 400 | 610.9 | 400 | 361.1 | 400 | 614.5 | 400 | 368.1 | 400 | 621.5 | 400 |
| | 460-60 | 301.7 | 350 | 509.7 | 350 | 304.5 | 350 | 512.5 | 350 | 310.0 | 350 | 518.0 | 350 |
| | 575-60 | 244.9 | 250 | 412.5 | 250 | 247.1 | 250 | 414.7 | 250 | 251.9 | 300 | 419.5 | 300 |
| 150 Single Pump | 208/230-60 | 676.8 | 700 | 1119.0 | 700 | 679.8 | 700 | 1122.0 | 700 | 691.5 | 700 | 1133.7 | 700 |
| | 380-60 | 359.4 | 400 | 612.8 | 400 | 361.1 | 400 | 614.5 | 400 | 368.1 | 400 | 621.5 | 400 |
| | 460-60 | 303.1 | 300 | 511.1 | 350 | 304.5 | 350 | 512.5 | 350 | 310.0 | 350 | 518.0 | 350 |
| | 575-60 | 246.0 | 250 | 413.6 | 250 | 247.1 | 250 | 414.7 | 250 | 251.9 | 300 | 419.5 | 300 |

LEGEND

**ICF** — Instantaneous Current Flow
**MCA** — Minimum Circuit Amps
**MOCP** — Maximum Overcurrent Protection

NOTES:

1. Units are suitable for use on electrical systems where voltage supplied to the unit terminals is not below or above the listed minimum and maximum limits. Maximum allowable phase imbalance is: voltage 2%; amps 10%.
2. All units/modules have single point primary power connection. (Each unit/module requires its own power supply.) Main power must be supplied from a field-supplied disconnect.
3. Cooler heater is wired into the control circuit so it is always operable as long as the power supply disconnect and heater safety device are on.
4. Power draw control circuits include both crankcase heaters (sizes 070-150 only) and cooler heaters (where used). Each compressor on sizes 070-090 has a crankcase heater which draws 90 watts of power, while each compressor on sizes 100-150 has a crankcase heater which draws 56 watts of power.
5. 30RAP chillers with Greenspeed® intelligence are not available on unit sizes 010, 015, and 070-150.

## 30RAP ELECTRICAL DATA (cont)

### DUAL POINT, HYDRONIC PACKAGE WITH OPTIONAL VALUE SOUND FANS (60 Hz ONLY)

| 30RAP UNIT SIZE | VOLTAGE V-Ph-Hz | PUMP SIZE 3.0 hp CIRCUIT 1 | | | | PUMP SIZE 3.0 hp CIRCUIT 2 | | | |
|---|---|---|---|---|---|---|---|---|---|
| | | MCA | MOCP | ICF | REC FUSE | MCA | MOCP | ICF | REC FUSE |
| 070 | 208/230-3-60 | 158.6 | 200 | 428.8 | 175 | 190.5 | 225 | 460.7 | 225 |
| | 380-3-60 | 96.0 | 125 | 249.5 | 110 | 115.6 | 125 | 269.1 | 125 |
| | 460-3-60 | 77.0 | 100 | 222.4 | 90 | 91.6 | 110 | 237.0 | 100 |
| | 575-3-60 | 66.3 | 90 | 168.7 | 80 | 80.3 | 100 | 182.7 | 90 |
| 080 | 208/230-3-60 | — | — | — | — | — | — | — | — |
| | 380-3-60 | — | — | — | — | — | — | — | — |
| | 460-3-60 | — | — | — | — | — | — | — | — |
| | 575-3-60 | — | — | — | — | — | — | — | — |
| 090 | 208/230-3-60 | — | — | — | — | — | — | — | — |
| | 380-3-60 | — | — | — | — | — | — | — | — |
| | 460-3-60 | — | — | — | — | — | — | — | — |
| | 575-3-60 | — | — | — | — | — | — | — | — |
| 100 | 208/230-3-60 | — | — | — | — | — | — | — | — |
| | 380-3-60 | — | — | — | — | — | — | — | — |
| | 460-3-60 | — | — | — | — | — | — | — | — |
| | 575-3-60 | — | — | — | — | — | — | — | — |
| 115 | 208/230-3-60 | — | — | — | — | — | — | — | — |
| | 380-3-60 | — | — | — | — | — | — | — | — |
| | 460-3-60 | — | — | — | — | — | — | — | — |
| | 575-3-60 | — | — | — | — | — | — | — | — |
| 130 | 208/230-3-60 | — | — | — | — | — | — | — | — |
| | 380-3-60 | — | — | — | — | — | — | — | — |
| | 460-3-60 | — | — | — | — | — | — | — | — |
| | 575-3-60 | — | — | — | — | — | — | — | — |
| 150 | 208/230-3-60 | — | — | — | — | — | — | — | — |
| | 380-3-60 | — | — | — | — | — | — | — | — |
| | 460-3-60 | — | — | — | — | — | — | — | — |
| | 575-3-60 | — | — | — | — | — | — | — | — |

| 30RAP UNIT SIZE | VOLTAGE V-Ph-Hz | PUMP SIZE 5.0 hp CIRCUIT 1 | | | | PUMP SIZE 5.0 hp CIRCUIT 2 | | | |
|---|---|---|---|---|---|---|---|---|---|
| | | MCA | MOCP | ICF | REC FUSE | MCA | MOCP | ICF | REC FUSE |
| 070 | 208/230-3-60 | 158.6 | 200 | 428.8 | 175 | 196.8 | 250 | 467.0 | 225 |
| | 380-3-60 | 96.0 | 125 | 249.5 | 110 | 118.6 | 150 | 272.1 | 150 |
| | 460-3-60 | 77.0 | 100 | 222.4 | 90 | 94.5 | 110 | 239.9 | 110 |
| | 575-3-60 | 66.3 | 90 | 168.7 | 80 | 82.4 | 100 | 184.8 | 90 |
| 080 | 208/230-3-60 | 206.3 | 250 | 442.2 | 225 | 196.8 | 250 | 467.0 | 225 |
| | 380-3-60 | 110.8 | 125 | 216.2 | 125 | 118.6 | 150 | 272.1 | 150 |
| | 460-3-60 | 94.9 | 110 | 216.0 | 110 | 94.5 | 110 | 239.9 | 110 |
| | 575-3-60 | 80.3 | 100 | 164.4 | 90 | 82.4 | 100 | 184.8 | 90 |
| 090 | 208/230-3-60 | 221.0 | 250 | 491.2 | 250 | 196.8 | 250 | 467.0 | 225 |
| | 380-3-60 | 133.9 | 150 | 287.4 | 150 | 118.6 | 150 | 272.1 | 150 |
| | 460-3-60 | 107.2 | 125 | 252.6 | 125 | 94.5 | 110 | 239.9 | 110 |
| | 575-3-60 | 92.6 | 110 | 195.0 | 100 | 82.4 | 100 | 184.8 | 90 |
| 100 | 208/230-3-60 | 239.0 | 300 | 681.2 | 300 | 259.2 | 300 | 650.4 | 300 |
| | 380-3-60 | 127.3 | 175 | 380.7 | 150 | 132.9 | 150 | 344.9 | 150 |
| | 460-3-60 | 107.8 | 125 | 315.8 | 125 | 113.4 | 125 | 287.5 | 125 |
| | 575-3-60 | 86.8 | 110 | 254.4 | 100 | 90.6 | 110 | 232.8 | 100 |
| 115 | 208/230-3-60 | 296.6 | 350 | 687.8 | 350 | 259.2 | 300 | 650.4 | 300 |
| | 380-3-60 | 156.0 | 175 | 368.0 | 175 | 132.9 | 150 | 344.9 | 150 |
| | 460-3-60 | 132.7 | 150 | 306.8 | 150 | 113.4 | 125 | 287.5 | 125 |
| | 575-3-60 | 106.0 | 125 | 248.2 | 125 | 90.6 | 110 | 232.8 | 100 |
| 130 | 208/230-3-60 | 303.2 | 350 | 694.4 | 350 | 321.6 | 400 | 763.8 | 350 |
| | 380-3-60 | 159.9 | 175 | 371.9 | 175 | 168.3 | 200 | 421.7 | 200 |
| | 460-3-60 | 136.0 | 150 | 310.1 | 150 | 142.3 | 175 | 350.3 | 175 |
| | 575-3-60 | 108.6 | 125 | 250.8 | 125 | 115.6 | 125 | 283.2 | 125 |
| 150 | 208/230-3-60 | 372.2 | 450 | 814.4 | 400 | 321.6 | 400 | 763.8 | 350 |
| | 380-3-60 | 199.2 | 225 | 452.6 | 225 | 168.3 | 200 | 421.7 | 200 |
| | 460-3-60 | 168.2 | 200 | 376.2 | 200 | 142.3 | 175 | 350.3 | 175 |
| | 575-3-60 | 136.2 | 150 | 303.8 | 150 | 115.6 | 125 | 283.2 | 125 |

| 30RAP UNIT SIZE | VOLTAGE V-Ph-Hz | PUMP SIZE 7.5 hp CIRCUIT 1 | | | | PUMP SIZE 7.5 hp CIRCUIT 2 | | | |
|---|---|---|---|---|---|---|---|---|---|
| | | MCA | MOCP | ICF | REC FUSE | MCA | MOCP | ICF | REC FUSE |
| 070 | 208/230-3-60 | 158.6 | 200 | 428.8 | 175 | 199.9 | 250 | 470.1 | 225 |
| | 380-3-60 | 96.0 | 125 | 249.5 | 110 | 120.9 | 150 | 274.4 | 150 |
| | 460-3-60 | 77.0 | 100 | 222.4 | 90 | 96.1 | 110 | 241.5 | 110 |
| | 575-3-60 | 66.3 | 90 | 168.7 | 80 | 84.0 | 100 | 186.4 | 90 |
| 080 | 208/230-3-60 | 206.3 | 250 | 442.2 | 225 | 199.9 | 250 | 470.1 | 225 |
| | 380-3-60 | 110.8 | 125 | 216.2 | 125 | 120.9 | 150 | 274.4 | 150 |
| | 460-3-60 | 94.9 | 110 | 216.0 | 110 | 96.1 | 110 | 241.5 | 110 |
| | 575-3-60 | 80.3 | 100 | 164.4 | 90 | 84.0 | 100 | 186.4 | 90 |
| 090 | 208/230-3-60 | 221.0 | 250 | 491.2 | 250 | 199.9 | 250 | 470.1 | 225 |
| | 380-3-60 | 133.9 | 150 | 287.4 | 150 | 120.9 | 150 | 274.4 | 150 |
| | 460-3-60 | 107.2 | 125 | 252.6 | 125 | 96.1 | 110 | 241.5 | 110 |
| | 575-3-60 | 92.6 | 110 | 195.0 | 100 | 84.0 | 100 | 186.4 | 90 |
| 100 | 208/230-3-60 | 239.0 | 300 | 681.2 | 300 | 262.3 | 300 | 653.5 | 300 |
| | 380-3-60 | 127.3 | 175 | 380.7 | 150 | 135.2 | 150 | 347.2 | 150 |
| | 460-3-60 | 107.8 | 125 | 315.8 | 125 | 115.0 | 125 | 289.1 | 125 |
| | 575-3-60 | 86.8 | 110 | 254.4 | 100 | 92.2 | 110 | 234.4 | 100 |
| 115 | 208/230-3-60 | 296.6 | 350 | 687.8 | 350 | 262.3 | 300 | 653.5 | 300 |
| | 380-3-60 | 156.0 | 175 | 368.0 | 175 | 135.2 | 150 | 347.2 | 150 |
| | 460-3-60 | 132.7 | 150 | 306.8 | 150 | 115.0 | 125 | 289.1 | 125 |
| | 575-3-60 | 106.0 | 125 | 248.2 | 125 | 92.2 | 110 | 234.4 | 100 |
| 130 | 208/230-3-60 | 303.2 | 350 | 694.4 | 350 | 324.7 | 400 | 766.9 | 350 |
| | 380-3-60 | 159.9 | 175 | 371.9 | 175 | 170.6 | 200 | 424.0 | 200 |
| | 460-3-60 | 136.0 | 150 | 310.1 | 150 | 143.9 | 175 | 351.9 | 175 |
| | 575-3-60 | 108.6 | 125 | 250.8 | 125 | 117.2 | 150 | 284.8 | 150 |
| 150 Dual Pump | 208/230-3-60 | 372.2 | 450 | 814.4 | 400 | 324.7 | 400 | 766.9 | 350 |
| | 380-3-60 | 199.2 | 225 | 452.6 | 225 | 170.6 | 200 | 424.0 | 200 |
| | 460-3-60 | 168.2 | 200 | 376.2 | 200 | 143.9 | 175 | 351.9 | 175 |
| | 575-3-60 | 136.2 | 150 | 303.8 | 150 | 117.2 | 150 | 284.8 | 150 |
| 150 Single Pump | 208/230-3-60 | 372.2 | 450 | 814.4 | 400 | 328.2 | 400 | 770.4 | 400 |
| | 380-3-60 | 199.2 | 225 | 452.6 | 225 | 172.5 | 200 | 425.9 | 200 |
| | 460-3-60 | 168.2 | 200 | 376.2 | 200 | 145.3 | 175 | 353.3 | 175 |
| | 575-3-60 | 136.2 | 150 | 303.8 | 150 | 118.3 | 150 | 285.9 | 150 |

# 30RAP ELECTRICAL DATA (cont)

## DUAL POINT, HYDRONIC PACKAGE WITH OPTIONAL VALUE SOUND FANS (60 Hz ONLY) (cont)

| 30RAP UNIT SIZE | VOLTAGE V-Ph-Hz | PUMP SIZE 10.0 hp CIRCUIT 1 | | | | PUMP SIZE 10.0 hp CIRCUIT 2 | | | |
|---|---|---|---|---|---|---|---|---|---|
| | | MCA | MOCP | ICF | REC FUSE | MCA | MOCP | ICF | REC FUSE |
| 070 | 208/230-3-60 | 158.6 | 200 | 428.8 | 175 | 206.4 | 250 | 476.6 | 225 |
| | 380-3-60 | 96.0 | 125 | 249.5 | 110 | 124.5 | 150 | 278.0 | 150 |
| | 460-3-60 | 77.0 | 100 | 222.4 | 90 | 98.9 | 125 | 244.3 | 110 |
| | 575-3-60 | 66.3 | 90 | 168.7 | 80 | 86.2 | 100 | 188.6 | 100 |
| 080 | 208/230-3-60 | 206.3 | 250 | 442.2 | 225 | 206.4 | 250 | 476.6 | 225 |
| | 380-3-60 | 110.8 | 125 | 216.2 | 125 | 124.5 | 150 | 278.0 | 150 |
| | 460-3-60 | 94.9 | 110 | 216.0 | 110 | 98.9 | 125 | 244.3 | 110 |
| | 575-3-60 | 80.3 | 100 | 164.4 | 90 | 86.2 | 100 | 188.6 | 100 |
| 090 | 208/230-3-60 | 221.0 | 250 | 491.2 | 250 | 206.4 | 250 | 476.6 | 225 |
| | 380-3-60 | 133.9 | 150 | 287.4 | 150 | 124.5 | 150 | 278.0 | 150 |
| | 460-3-60 | 107.2 | 125 | 252.6 | 125 | 98.9 | 125 | 244.3 | 110 |
| | 575-3-60 | 92.6 | 110 | 195.0 | 100 | 86.2 | 100 | 188.6 | 100 |
| 100 | 208/230-3-60 | 239.0 | 300 | 681.2 | 300 | 268.8 | 300 | 660.0 | 300 |
| | 380-3-60 | 127.3 | 175 | 380.7 | 150 | 138.8 | 175 | 350.8 | 150 |
| | 460-3-60 | 107.8 | 125 | 315.8 | 125 | 117.8 | 150 | 291.9 | 150 |
| | 575-3-60 | 86.8 | 110 | 254.4 | 100 | 94.4 | 110 | 236.6 | 110 |
| 115 | 208/230-3-60 | 296.6 | 350 | 687.8 | 350 | 268.8 | 300 | 660.0 | 300 |
| | 380-3-60 | 156.0 | 175 | 368.0 | 175 | 138.8 | 175 | 350.8 | 150 |
| | 460-3-60 | 132.7 | 150 | 306.8 | 150 | 117.8 | 150 | 291.9 | 150 |
| | 575-3-60 | 106.0 | 125 | 248.2 | 125 | 94.4 | 110 | 236.6 | 110 |
| 130 | 208/230-3-60 | 303.2 | 350 | 694.4 | 350 | 331.2 | 400 | 773.4 | 400 |
| | 380-3-60 | 159.9 | 175 | 371.9 | 175 | 174.2 | 225 | 427.6 | 200 |
| | 460-3-60 | 136.0 | 150 | 310.1 | 150 | 146.7 | 175 | 354.7 | 175 |
| | 575-3-60 | 108.6 | 125 | 250.8 | 125 | 119.4 | 150 | 287.0 | 150 |
| 150 | 208/230-3-60 | 372.2 | 450 | 814.4 | 400 | 331.2 | 400 | 773.4 | 400 |
| | 380-3-60 | 199.2 | 225 | 452.6 | 225 | 174.2 | 225 | 427.6 | 200 |
| | 460-3-60 | 168.2 | 200 | 376.2 | 200 | 146.7 | 175 | 354.7 | 175 |
| | 575-3-60 | 136.2 | 150 | 303.8 | 150 | 119.4 | 150 | 287.0 | 150 |

| 30RAP UNIT SIZE | VOLTAGE V-Ph-Hz | PUMP SIZE 15.0 hp CIRCUIT 1 | | | | PUMP SIZE 15.0 hp CIRCUIT 2 | | | |
|---|---|---|---|---|---|---|---|---|---|
| | | MCA | MOCP | ICF | REC FUSE | MCA | MOCP | ICF | REC FUSE |
| 070 | 208/230-3-60 | — | — | — | — | — | — | — | — |
| | 380-3-60 | — | — | — | — | — | — | — | — |
| | 460-3-60 | — | — | — | — | — | — | — | — |
| | 575-3-60 | — | — | — | — | — | — | — | — |
| 080 | 208/230-3-60 | 206.3 | 250 | 442.2 | 225 | 218.1 | 250 | 488.3 | 250 |
| | 380-3-60 | 110.8 | 125 | 216.2 | 125 | 131.5 | 150 | 285.0 | 150 |
| | 460-3-60 | 94.9 | 110 | 216.0 | 110 | 104.4 | 125 | 249.8 | 125 |
| | 575-3-60 | 80.3 | 100 | 164.4 | 90 | 91.0 | 110 | 193.4 | 100 |
| 090 | 208/230-3-60 | 221.0 | 250 | 491.2 | 250 | 218.1 | 250 | 488.3 | 250 |
| | 380-3-60 | 133.9 | 150 | 287.4 | 150 | 131.5 | 150 | 285.0 | 150 |
| | 460-3-60 | 107.2 | 125 | 252.6 | 125 | 104.4 | 125 | 249.8 | 125 |
| | 575-3-60 | 92.6 | 110 | 195.0 | 100 | 91.0 | 110 | 193.4 | 100 |
| 100 | 208/230-3-60 | 239.0 | 300 | 681.2 | 300 | 280.5 | 350 | 671.7 | 300 |
| | 380-3-60 | 127.3 | 175 | 380.7 | 150 | 145.8 | 175 | 357.8 | 175 |
| | 460-3-60 | 107.8 | 125 | 315.8 | 125 | 123.3 | 150 | 297.4 | 150 |
| | 575-3-60 | 86.8 | 110 | 254.4 | 100 | 99.2 | 125 | 241.4 | 110 |
| 115 | 208/230-3-60 | 296.6 | 350 | 687.8 | 350 | 280.5 | 350 | 671.7 | 300 |
| | 380-3-60 | 156.0 | 175 | 368.0 | 175 | 145.8 | 175 | 357.8 | 175 |
| | 460-3-60 | 132.7 | 150 | 306.8 | 150 | 123.3 | 150 | 297.4 | 150 |
| | 575-3-60 | 106.0 | 125 | 248.2 | 125 | 99.2 | 125 | 241.4 | 110 |
| 130 | 208/230-3-60 | 303.2 | 350 | 694.4 | 350 | 342.9 | 400 | 785.1 | 400 |
| | 380-3-60 | 159.9 | 175 | 371.9 | 175 | 181.2 | 225 | 434.6 | 200 |
| | 460-3-60 | 136.0 | 150 | 310.1 | 150 | 152.2 | 175 | 360.2 | 175 |
| | 575-3-60 | 108.6 | 125 | 250.8 | 125 | 124.2 | 150 | 291.8 | 150 |
| 150 | 208/230-3-60 | 372.2 | 450 | 814.4 | 400 | 342.9 | 400 | 785.1 | 400 |
| | 380-3-60 | 199.2 | 225 | 452.6 | 225 | 181.2 | 225 | 434.6 | 200 |
| | 460-3-60 | 168.2 | 200 | 376.2 | 200 | 152.2 | 175 | 360.2 | 175 |
| | 575-3-60 | 136.2 | 150 | 303.8 | 150 | 124.2 | 150 | 291.8 | 150 |

LEGEND

**ICF** — Instantaneous Current Flow
**MCA** — Minimum Circuit Amps
**MOCP** — Maximum Overcurrent Protection

NOTES:

1. Units are suitable for use on electrical systems where voltage supplied to the unit terminals is not below or above the listed minimum and maximum limits. Maximum allowable phase imbalance is: voltage 2%; amps 10%.
2. All units/modules have dual point primary power connection. (Each unit/module requires its own power supply.) Main power must be supplied from a field-supplied disconnect.
3. Cooler heater is wired into the control circuit so it is always operable as long as the power supply disconnect is on, even if any safety device is open.
4. Power draw control circuits include both crankcase heaters (sizes 070-150 only) and cooler heaters (where used). Each compressor on sizes 070-090 has a crankcase heater which draws 90 watts of power, while each compressor on sizes 100-150 has a crankcase heater which draws 56 watts of power.
5. 30RAP chillers with Greenspeed® intelligence are not available on unit sizes 010, 015, and 070-150.

# Electrical data (cont)

## FAN ELECTRICAL DATA

### SINGLE POINT, STANDARD LOW-SOUND AEROACOUSTIC™ FANS UNIT SIZES 010-060

| UNIT 30RAP | UNIT VOLTAGE V-Hz (3 Ph) | STANDARD CONDENSER FANS | |
|---|---|---|---|
| | | Quantity | FLA (each) |
| 010,011 | 208/230-60 | 1 | 6.0 |
| | 380-60 | 1 | 3.9 |
| | 380/415-50 | 1 | 2.9 |
| | 460-60 | 1 | 2.9 |
| | 575-60 | 1 | 2.4 |
| 015,016 | 208/230-60 | 1 | 6.0 |
| | 380-60 | 1 | 3.9 |
| | 380/415-50 | 1 | 2.9 |
| | 460-60 | 1 | 2.9 |
| | 575-60 | 1 | 2.4 |
| 018 | 208/230-60 | 2 | 6.0 |
| | 380-60 | 2 | 3.9 |
| | 380/415-50 | 2 | 2.9 |
| | 460-60 | 2 | 2.9 |
| | 575-60 | 2 | 2.4 |
| 020 | 208/230-60 | 2 | 6.0 |
| | 380-60 | 2 | 3.9 |
| | 380/415-50 | 2 | 2.9 |
| | 460-60 | 2 | 2.9 |
| | 575-60 | 2 | 2.4 |
| 025 | 208/230-60 | 2 | 6.0 |
| | 380-60 | 2 | 3.9 |
| | 380/415-50 | 2 | 2.9 |
| | 460-60 | 2 | 2.9 |
| | 575-60 | 2 | 2.4 |
| 030 | 208/230-60 | 2 | 6.0 |
| | 380-60 | 2 | 3.9 |
| | 380/415-50 | 2 | 2.9 |
| | 460-60 | 2 | 2.9 |
| | 575-60 | 2 | 2.4 |
| 035 | 208/230-60 | 3 | 6.0 |
| | 380-60 | 3 | 3.9 |
| | 380/415-50 | 3 | 2.9 |
| | 460-60 | 3 | 2.9 |
| | 575-60 | 3 | 2.4 |
| 040 | 208/230-60 | 3 | 6.0 |
| | 380-60 | 3 | 3.9 |
| | 380/415-50 | 3 | 2.9 |
| | 460-60 | 3 | 2.9 |
| | 575-60 | 3 | 2.4 |
| 045 | 208/230-60 | 3 | 6.0 |
| | 380-60 | 3 | 3.9 |
| | 380/415-50 | 3 | 2.9 |
| | 460-60 | 3 | 2.9 |
| | 575-60 | 3 | 2.4 |
| 050 | 208/230-60 | 3 | 6.0 |
| | 380-60 | 3 | 3.9 |
| | 380/415-50 | 3 | 2.9 |
| | 460-60 | 3 | 2.9 |
| | 575-60 | 3 | 2.4 |
| 055 | 208/230-60 | 4 | 6.0 |
| | 380-60 | 4 | 3.9 |
| | 380/415-50 | 4 | 2.9 |
| | 460-60 | 4 | 2.9 |
| | 575-60 | 4 | 2.4 |
| 060 | 208/230-60 | 4 | 6.0 |
| | 380-60 | 4 | 3.9 |
| | 380/415-50 | 4 | 2.9 |
| | 460-60 | 4 | 2.9 |
| | 575-60 | 4 | 2.4 |

LEGEND

**FLA** — Full Load Amps

NOTES:
1. Units are suitable for use on electrical systems where voltage supplied to the unit terminals is not below or above the listed minimum and maximum limits. Maximum allowable phase imbalance is: voltage 2%; amps 10%.
2. All units/modules have single point primary power connection. (Each unit/module requires its own power supply.) Main power must be supplied from a field-supplied disconnect.
3. The unit control circuit power transformer (24 v, single-phase for all voltages) is factory supplied.
4. Cooler heater is wired into the control circuit so it is always operable as long as the power supply disconnect and heater safety device are on.
5. 30RAP chillers with Greenspeed® intelligence are not available on unit sizes 010, 015, and 070-150.

### SINGLE POINT, STANDARD LOW-SOUND AEROACOUSTIC™ FANS UNIT SIZES 070-150

| UNIT 30RAP | UNIT VOLTAGE V-Hz (3 Ph) | STANDARD CONDENSER FANS | |
|---|---|---|---|
| | | Quantity | FLA (each) |
| 070 | 208/230-60 | 5 | 6.0 |
| | 380-60 | 5 | 3.9 |
| | 380/415-50 | 5 | 2.9 |
| | 460-60 | 5 | 2.9 |
| | 575-60 | 5 | 2.4 |
| 080 | 208/230-60 | 6 | 6.0 |
| | 380-60 | 6 | 3.9 |
| | 380/415-50 | 6 | 2.9 |
| | 460-60 | 6 | 2.9 |
| | 575-60 | 6 | 2.4 |
| 090 | 208/230-60 | 6 | 6.0 |
| | 380-60 | 6 | 3.9 |
| | 380/415-50 | 6 | 2.9 |
| | 460-60 | 6 | 2.9 |
| | 575-60 | 6 | 2.4 |
| 100 | 208/230-60 | 7 | 6.0 |
| | 380-60 | 7 | 3.9 |
| | 380/415-50 | 7 | 2.9 |
| | 460-60 | 7 | 2.9 |
| | 575-60 | 7 | 2.4 |
| 115 | 208/230-60 | 8 | 6.0 |
| | 380-60 | 8 | 3.9 |
| | 380/415-50 | 8 | 2.9 |
| | 460-60 | 8 | 2.9 |
| | 575-60 | 8 | 2.4 |
| 130 | 208/230-60 | 9 | 6.0 |
| | 380-60 | 9 | 3.9 |
| | 380/415-50 | 9 | 2.9 |
| | 460-60 | 9 | 2.9 |
| | 575-60 | 9 | 2.4 |
| 150 | 208/230-60 | 10 | 6.0 |
| | 380-60 | 10 | 3.9 |
| | 380/415-50 | 10 | 2.9 |
| | 460-60 | 10 | 2.9 |
| | 575-60 | 10 | 2.4 |

## FAN ELECTRICAL DATA (cont)

### SINGLE POINT, OPTIONAL VALUE SOUND FANS UNIT SIZES 010-060

| UNIT 30RAP | UNIT VOLTAGE V-Hz (3 Ph) | OPTIONAL CONDENSER FANS | |
|---|---|---|---|
| | | Quantity | FLA (each) |
| 010,011 | 208/230-60 | 1 | 6.6 |
| | 380-60 | 1 | 3.9 |
| | 380/415-50 | 1 | 3.3 |
| | 460-60 | 1 | 3.3 |
| | 575-60 | 1 | 2.6 |
| 015,016 | 208/230-60 | 1 | 6.6 |
| | 380-60 | 1 | 3.9 |
| | 380/415-50 | 1 | 3.3 |
| | 460-60 | 1 | 3.3 |
| | 575-60 | 1 | 2.6 |
| 018 | 208/230-60 | 2 | 6.6 |
| | 380-60 | 2 | 3.9 |
| | 380/415-50 | 2 | 3.3 |
| | 460-60 | 2 | 3.3 |
| | 575-60 | 2 | 2.6 |
| 020 | 208/230-60 | 2 | 6.6 |
| | 380-60 | 2 | 3.9 |
| | 380/415-50 | 2 | 3.3 |
| | 460-60 | 2 | 3.3 |
| | 575-60 | 2 | 2.6 |
| 025 | 208/230-60 | 2 | 6.6 |
| | 380-60 | 2 | 3.9 |
| | 380/415-50 | 2 | 3.3 |
| | 460-60 | 2 | 3.3 |
| | 575-60 | 2 | 2.6 |
| 030 | 208/230-60 | 2 | 6.6 |
| | 380-60 | 2 | 3.9 |
| | 380/415-50 | 2 | 3.3 |
| | 460-60 | 2 | 3.3 |
| | 575-60 | 2 | 2.6 |
| 035 | 208/230-60 | 3 | 6.6 |
| | 380-60 | 3 | 3.9 |
| | 380/415-50 | 3 | 3.3 |
| | 460-60 | 3 | 3.3 |
| | 575-60 | 3 | 2.6 |
| 040 | 208/230-60 | 3 | 6.6 |
| | 380-60 | 3 | 3.9 |
| | 380/415-50 | 3 | 3.3 |
| | 460-60 | 3 | 3.3 |
| | 575-60 | 3 | 2.6 |
| 045 | 208/230-60 | 3 | 6.6 |
| | 380-60 | 3 | 3.9 |
| | 380/415-50 | 3 | 3.3 |
| | 460-60 | 3 | 3.3 |
| | 575-60 | 3 | 2.6 |
| 050 | 208/230-60 | 3 | 6.6 |
| | 380-60 | 3 | 3.9 |
| | 380/415-50 | 3 | 3.3 |
| | 460-60 | 3 | 3.3 |
| | 575-60 | 3 | 2.6 |
| 055 | 208/230-60 | 4 | 6.6 |
| | 380-60 | 4 | 3.9 |
| | 380/415-50 | 4 | 3.3 |
| | 460-60 | 4 | 3.3 |
| | 575-60 | 4 | 2.6 |
| 060 | 208/230-60 | 4 | 6.6 |
| | 380-60 | 4 | 3.9 |
| | 380/415-50 | 4 | 3.3 |
| | 460-60 | 4 | 3.3 |
| | 575-60 | 4 | 2.6 |

LEGEND

**FLA** — Full Load Amps

NOTES:
1. Units are suitable for use on electrical systems where voltage supplied to the unit terminals is not below or above the listed minimum and maximum limits. Maximum allowable phase imbalance is: voltage 2%; amps 10%.
2. All units/modules have single point primary power connection. (Each unit/module requires its own power supply.) Main power must be supplied from a field-supplied disconnect.
3. The unit control circuit power transformer (24 v, single-phase for all voltages) is factory supplied.
4. Cooler heater is wired into the control circuit so it is always operable as long as the power supply disconnect and heater safety device are on.
5. 30RAP chillers with Greenspeed® intelligence are not available on unit sizes 010, 015, and 070-150.

### SINGLE POINT, OPTIONAL VALUE SOUND FANS UNIT SIZES 070-150

| UNIT 30RAP | UNIT VOLTAGE V-Hz (3 Ph) | OPTIONAL CONDENSER FANS | |
|---|---|---|---|
| | | Quantity | FLA (each) |
| 070 | 208/230-60 | 5 | 6.6 |
| | 380-60 | 5 | 3.9 |
| | 380/415-50 | 5 | 3.3 |
| | 460-60 | 5 | 3.3 |
| | 575-60 | 5 | 2.6 |
| 080 | 208/230-60 | 6 | 6.6 |
| | 380-60 | 6 | 3.9 |
| | 380/415-50 | 6 | 3.3 |
| | 460-60 | 6 | 3.3 |
| | 575-60 | 6 | 2.6 |
| 090 | 208/230-60 | 6 | 6.6 |
| | 380-60 | 6 | 3.9 |
| | 380/415-50 | 6 | 3.3 |
| | 460-60 | 6 | 3.3 |
| | 575-60 | 6 | 2.6 |
| 100 | 208/230-60 | 7 | 6.6 |
| | 380-60 | 7 | 3.9 |
| | 380/415-50 | 7 | 3.3 |
| | 460-60 | 7 | 3.3 |
| | 575-60 | 7 | 2.6 |
| 115 | 208/230-60 | 8 | 6.6 |
| | 380-60 | 8 | 3.9 |
| | 380/415-50 | 8 | 3.3 |
| | 460-60 | 8 | 3.3 |
| | 575-60 | 8 | 2.6 |
| 130 | 208/230-60 | 9 | 6.6 |
| | 380-60 | 9 | 3.9 |
| | 380/415-50 | 9 | 3.3 |
| | 460-60 | 9 | 3.3 |
| | 575-60 | 9 | 2.6 |
| 150 | 208/230-60 | 10 | 6.6 |
| | 380-60 | 10 | 3.9 |
| | 380/415-50 | 10 | 3.3 |
| | 460-60 | 10 | 3.3 |
| | 575-60 | 10 | 2.6 |

# Electrical data (cont)

## PUMP ELECTRICAL DATA (60 Hz ONLY)

| 30RAP SIZE | PUMP OPTION | PUMP SIZE | PUMP RPM | UNIT VOLTAGE V-Hz (3 Ph) | FLA (each) |
|---|---|---|---|---|---|
| 010-060 | **2, 9** | 1.5 HP | 3500<br>3500<br>3500<br>3500 | 208/230-60<br>380-60<br>460-60<br>575-60 | 4.3<br>2.4<br>2.1<br>1.6 |
| | **3, 4, B, C** | 3.0 HP | 3500<br>3500<br>3500<br>3500 | 208/230-60<br>380-60<br>460-60<br>575-60 | 7.9<br>4.4<br>3.7<br>3.0 |
| | **5, 6, D, F** | 5.0 HP | 3500<br>3500<br>3500<br>3500 | 208/230-60<br>380-60<br>460-60<br>575-60 | 12.6<br>7.0<br>5.8<br>4.6 |
| | **7, G** | 7.5 HP | 3500<br>3500<br>3500<br>3500 | 208/230-60<br>380-60<br>460-60<br>575-60 | 18.5<br>10.4<br>8.7<br>7.0 |
| | **Z, H** | 10.0 HP | 3500<br>3500<br>3500<br>3500 | 208/230-60<br>380-60<br>460-60<br>575-60 | 25.0<br>14.0<br>11.5<br>9.2 |
| 070-150 | **1, 6, J** | 3.0 HP | 3500 - Single<br>1750 - Dual | 208/230-60<br>380-60<br>460-60<br>575-60 | 9.1<br>5.1<br>4.2<br>3.3 |
| | **2, 7, D, K** | 5.0 HP | 1750 - 150 ton single<br>3500 - All other | 208/230-60<br>380-60<br>460-60<br>575-60 | 15.4<br>8.1<br>7.1<br>5.4 |
| | **3, 8, F, L** | 7.5 HP | 1750 - 150 ton single | 208/230-60<br>380-60<br>460-60<br>575-60 | 22.0<br>12.3<br>10.1<br>8.1 |
| | | | 3500 - All other | 208/230-60<br>380-60<br>460-60<br>575-60 | 18.5<br>10.4<br>8.7<br>7.0 |
| | **4, 9, G, M** | 10.0 HP | 3500 | 208/230-60<br>380-60<br>460-60<br>575-60 | 25.0<br>14.0<br>11.5<br>9.2 |
| | **5, B, H, N** | 15.0 HP | 3500 | 208/230-60<br>380-60<br>460-60<br>575-60 | 36.7<br>21.0<br>17.0<br>14.0 |

LEGEND

**FLA** — Full Load Amps

NOTES:

1. Units are suitable for use on electrical systems where voltage supplied to the unit terminals is not below or above the listed minimum and maximum limits. Maximum allowable phase imbalance is: voltage 2%; amps 10%.
2. All units/modules have single point primary power connection. (Each unit/module requires its own power supply.) Main power must be supplied from a field-supplied disconnect.
3. The unit control circuit power transformer (24 v, single-phase for all voltages) is factory supplied.
4. Cooler heater is wired into the control circuit so it is always operable as long as the power supply disconnect and heater safety device are on.
5. 30RAP chillers with Greenspeed® intelligence are not available on unit sizes 010, 015, and 070-150.

## FIELD WIRING SIZES

| CONNECTION TYPE | 30RAP UNIT SIZES | MCA RANGE | WIRE SIZE RANGE | MAXIMUM NUMBER OF WIRES PER PHASE | HIGH SCCR FUSE TYPE |
|---|---|---|---|---|---|
| TERMINAL BLOCK | 010-060 | MCA up to 175 | 14 AWG to 2/0 AWG | 1 | J, T, RK1, RK5, G, CC |
| | | MCA 175.1 to 335 | 6 AWG to 400 kcmil | 1 | J, T, RK1, RK5, G, CC |
| | 070-150 | MCA up to 420 | 2 AWG to 600 kcmil | 1 | J, T, RK1, RK5, G, CC |
| | | MCA 420.1 to 760 | 6 AWG to 500 kcmil | 2 | J, T, RK1, RK5, G, CC |
| NON-FUSED DISCONNECT | ALL | MCA up to 100 | 14 AWG to 3/0 AWG | 1 | — |
| | | MCA 100.1 to 250 | 6 AWG to 350 kcmil | 1 | — |
| | | MCA 250.1 to 600 | 3/0 AWG to 500 kcmil | 2 | — |

LEGEND

**AWG** — American Wire Gage
**MCA** — Minimum Circuit Amps
**SCCR** — Short Circuit Current Rating

NOTES:

1. Wiring for main field supply must be rated 75 C. Use copper conductors only.
2. Units with high SCCR option and terminal block must use approved fuses to meet high SCCR rating.
3. High SCCR option not available on dual point power units or with 208/230-v units at sizes 30RAP100-150.
4. 30RAP chillers with Greenspeed® intelligence are not available on unit sizes 010, 015, and 070-150.

## ACCESSORY TANK ELECTRICAL DATA FOR 30RAP010-060 ONLY

| UNIT VOLTAGE (V-Hz) | ACCESSORY PART NO. 30RA-900--- | FLA |
|---|---|---|
| 208/230-60 | 050 | 11.3 |
| | 051 | 11.3 |
| | 052 | 22.6 |
| 460-60 | 050 | 5.7 |
| | 051 | 5.7 |
| | 052 | 11.3 |
| 575-60 | 050 | 7.1 |
| | 051 | 7.1 |
| | 052 | 14.1 |
| 380-60 | 050 | 4.7 |
| | 051 | 4.7 |
| | 052 | 9.3 |
| 380/415-50 | 050 | 4.9 |
| | 051 | 4.9 |
| | 052 | 9.8 |

LEGEND

**FLA** — Full Load Amps

NOTE: The storage tank obtains its power from the chiller. No separate power source is required.

## COMPRESSOR ELECTRICAL DATA SINGLE/DUAL POINT — UNIT SIZES 010-060

| UNIT 30RAP | NUMBER OF COMPRESSORS PER CIRCUIT | UNIT VOLTAGE V-Hz (3 Ph) | CIRCUIT* | | | |
|---|---|---|---|---|---|---|
| | | | CIRCUIT A | | CIRCUIT B | |
| | | | RLA | LRA | RLA | LRA |
| 010 | 1 | 208/230-60 | 48.1 | 245 | — | — |
| | | 380-60 | 23.7 | 145 | — | — |
| | | 380/415-50 | 18.6 | 125 | — | — |
| | | 460-60 | 18.6 | 125 | — | — |
| | | 575-60 | 14.7 | 100 | — | — |
| 011 | 2 | 208/230-60 | 23.2, 16.0 | 164, 110 | — | — |
| | | 380-60 | 12.2, 8.5 | 73, 66 | — | — |
| | | 380/415-50 | 11.2, 7.8 | 75, 52 | — | — |
| | | 460-60 | 11.2, 7.8 | 75, 52 | — | — |
| | | 575-60 | 7.9, 5.7 | 54, 39 | — | — |
| 015 | 1 | 208/230-60 | 55.8 | 340 | — | — |
| | | 380-60 | 34.0 | 196 | — | — |
| | | 380/415-50 | 26.9 | 179 | — | — |
| | | 460-60 | 26.9 | 179 | — | — |
| | | 575-60 | 23.7 | 132 | — | — |
| 016 | 2 | 208/230-60 | 28.2, 23.2 | 240, 164 | — | — |
| | | 380-60 | 16.0, 12.2 | 135, 73 | — | — |
| | | 380/415-50 | 14.7, 11.2 | 130, 75 | — | — |
| | | 460-60 | 14.7, 11.2 | 130, 75 | — | — |
| | | 575-60 | 11.3, 7.9 | 94, 54 | — | — |
| 018 | 2 | 208/230-60 | 33.4 | 225 | — | — |
| | | 380-60 | 19.2 | 140 | — | — |
| | | 380/415-50 | 16.7 | 114 | — | — |
| | | 460-60 | 16.7 | 114 | — | — |
| | | 575-60 | 13.4 | 80 | — | — |
| 020 | 2 | 208/230-60 | 35.8 | 239 | — | — |
| | | 380-60 | 23.7 | 145 | — | — |
| | | 380/415-50 | 17.9 | 125 | — | — |
| | | 460-60 | 17.9 | 125 | — | — |
| | | 575-60 | 14.3 | 80 | — | — |
| 025 | 2 | 208/230-60 | 51.3 | 300 | — | — |
| | | 380-60 | 26.9 | 139 | — | — |
| | | 380/415-50 | 23.1 | 150 | — | — |
| | | 460-60 | 23.1 | 150 | — | — |
| | | 575-60 | 19.9 | 109 | — | — |
| 030 | 2 | 208/230-60 | 55.8 | 340 | — | — |
| | | 380-60 | 34.0 | 196 | — | — |
| | | 380/415-50 | 26.9 | 179 | — | — |
| | | 460-60 | 26.9 | 179 | — | — |
| | | 575-60 | 23.7 | 132 | — | — |
| 035 | 2 | 208/230-60 | 35.8 | 239 | 33.4 | 225 |
| | | 380-60 | 23.7 | 145 | 19.2 | 140 |
| | | 380/415-50 | 17.9 | 125 | 16.7 | 114 |
| | | 460-60 | 17.9 | 125 | 16.7 | 114 |
| | | 575-60 | 14.3 | 80 | 13.4 | 80 |
| 040 | 2 | 208/230-60 | 35.8 | 239 | 48.1 | 245 |
| | | 380-60 | 23.7 | 145 | 23.7 | 145 |
| | | 380/415-50 | 17.9 | 125 | 18.6 | 125 |
| | | 460-60 | 17.9 | 125 | 18.6 | 125 |
| | | 575-60 | 14.3 | 80 | 14.7 | 100 |
| 045 | 2 | 208/230-60 | 48.1 | 245 | 51.3 | 300 |
| | | 380-60 | 23.7 | 145 | 23.7 | 145 |
| | | 380/415-50 | 18.6 | 125 | 23.1 | 150 |
| | | 460-60 | 18.6 | 125 | 23.1 | 150 |
| | | 575-60 | 14.7 | 100 | 19.9 | 109 |
| 050 | 2 | 208/230-60 | 51.3 | 300 | 51.3 | 300 |
| | | 380-60 | 26.9 | 139 | 26.9 | 139 |
| | | 380/415-50 | 23.1 | 150 | 23.1 | 150 |
| | | 460-60 | 23.1 | 150 | 23.1 | 150 |
| | | 575-60 | 19.9 | 109 | 19.9 | 109 |
| 055 | 2 | 208/230-60 | 51.3 | 300 | 55.8 | 340 |
| | | 380-60 | 26.9 | 139 | 34.0 | 196 |
| | | 380/415-50 | 23.1 | 150 | 26.9 | 179 |
| | | 460-60 | 23.1 | 150 | 26.9 | 179 |
| | | 575-60 | 19.9 | 109 | 23.7 | 132 |
| 060 | 2 | 208/230-60 | 55.8 | 340 | 55.8 | 340 |
| | | 380-60 | 34.0 | 196 | 34.0 | 196 |
| | | 380/415-50 | 26.9 | 179 | 26.9 | 179 |
| | | 460-60 | 26.9 | 179 | 26.9 | 179 |
| | | 575-60 | 23.7 | 132 | 23.7 | 132 |

LEGEND

**LRA** — Locked Rotor Amps
**RLA** — Rated Load Amps

* All data is per individual compressor. Where two values are shown for Circuit A (sizes 001, 016, and 100), first value is for compressor 1 and second value is for compressor 2.

NOTE: 30RAP chillers with Greenspeed intelligence are not available on unit sizes 010, 015, and 070-150.

## COMPRESSOR ELECTRICAL DATA SINGLE/DUAL POINT — UNIT SIZES 070-150

| UNIT 30RAP | NUMBER OF COMPRESSORS PER CIRCUIT | UNIT VOLTAGE V-Hz (3 Ph) | CIRCUIT* | | | |
|---|---|---|---|---|---|---|
| | | | CIRCUIT A | | CIRCUIT B | |
| | | | RLA | LRA | RLA | LRA |
| 070 | 2/3† | 208/230-60 | 55.8 | 340 | 55.8 | 340 |
| | | 380-60 | 34.0 | 196 | 34.0 | 196 |
| | | 380/415-50 | 26.9 | 179 | 26.9 | 179 |
| | | 460-60 | 26.9 | 179 | 26.9 | 179 |
| | | 575-60 | 23.7 | 132 | 23.7 | 132 |
| 080 | 3 | 208/230-60 | 51.3 | 300 | 55.8 | 340 |
| | | 380-60 | 26.9 | 139 | 34.0 | 196 |
| | | 380/415-50 | 23.1 | 150 | 26.9 | 179 |
| | | 460-60 | 23.1 | 150 | 26.9 | 179 |
| | | 575-60 | 19.9 | 109 | 23.7 | 132 |
| 090 | 3 | 208/230-60 | 55.8 | 340 | 55.8 | 340 |
| | | 380-60 | 34.0 | 196 | 34.0 | 196 |
| | | 380/415-50 | 26.9 | 179 | 26.9 | 179 |
| | | 460-60 | 26.9 | 179 | 26.9 | 179 |
| | | 575-60 | 23.7 | 132 | 23.7 | 132 |
| 100 | 2/3† | 208/230-60 | 94.2, 75.0 | 560, 485 | 75.0 | 485 |
| | | 380-60 | 49.3, 38.4 | 315, 260 | 38.4 | 260 |
| | | 380/415-50 | 41.6, 32.7 | 260, 215 | 32.7 | 215 |
| | | 460-60 | 41.6, 32.7 | 260, 215 | 32.7 | 215 |
| | | 575-60 | 33.9, 26.2 | 210, 175 | 26.2 | 175 |
| 115 | 3 | 208/230-60 | 75.0 | 485 | 75.0 | 485 |
| | | 380-60 | 38.4 | 260 | 38.4 | 260 |
| | | 380/415-50 | 32.7 | 215 | 32.7 | 215 |
| | | 460-60 | 32.7 | 215 | 32.7 | 215 |
| | | 575-60 | 26.2 | 175 | 26.2 | 175 |
| 130 | 3 | 208/230-60 | 75.0 | 485 | 94.2 | 560 |
| | | 380-60 | 38.4 | 260 | 49.3 | 315 |
| | | 380/415-50 | 32.7 | 215 | 41.6 | 260 |
| | | 460-60 | 32.7 | 215 | 41.6 | 260 |
| | | 575-60 | 26.2 | 175 | 33.9 | 210 |
| 150 | 3 | 208/230-60 | 94.2 | 560 | 94.2 | 560 |
| | | 380-60 | 49.3 | 315 | 49.3 | 315 |
| | | 380/415-50 | 32.7 | 260 | 41.6 | 260 |
| | | 460-60 | 41.6 | 260 | 41.6 | 260 |
| | | 575-60 | 33.9 | 210 | 33.9 | 210 |

LEGEND

**LRA** — Locked Rotor Amps
**RLA** — Rated Load Amps

* All data is per individual compressor.
† Circuit A has 2 compressors; Circuit B has 3 compressors.

NOTE: 30RAP chillers with Greenspeed intelligence are not available on unit sizes 010, 015, and 070-150.

**Microprocessor —** The *Comfort*Link microprocessor controls overall unit operation. Its central executive routine controls a number of processes simultaneously. These include internal timers, reading inputs, analog to digital conversions, fan control, display control, diagnostic control, output relay control, demand limit, capacity control, head pressure control, and temperature reset. Some processes are updated almost continuously, others every 2 to 3 seconds, and some every 30 seconds. The microprocessor routine is started by switching the Emergency ON-OFF switch to ON position. Pump control of external pumps (where so configured) or optional internal pump (60 Hz only), will energize the cooler pump to the internal (or CCN) time schedule (or input occupied signal from external system).

Where dual pumps are utilized, only one pump will be used at a time. The control will start the pump with the least number of operating hours. When the unit receives a call for cooling (based on a deviation from chilled water set point), the unit stages up in capacity to maintain the cooler fluid set point. The first compressor starts 1 to 3 minutes after the call for cooling. The *Comfort*Link microprocessor controls the capacity of the chiller by cycling compressors at a rate to satisfy actual dynamic load conditions. The control maintains leaving-fluid temperature set point shown on the scrolling marquee display board through intelligent cycling of compressors. Accuracy depends on loop volume, loop flow rate, load, outdoor-air temperature, number of stages, and particular stage being cycled off. No adjustment for cooling range or cooler flow rate is required, because the control automatically compensates for cooling range by measuring both return-fluid temperature and leaving-fluid temperature. This is referred to as leaving-fluid temperature control with return-fluid temperature compensation.

The basic logic for determining when to add or remove a stage is a time band integration of deviation from set point plus rate of change of leaving-fluid temperature. When leaving-fluid temperature is close to set point and slowly moving closer, logic prevents addition of another stage.

If 1° F per minute (0.6° C per minute) pulldown control has been selected (adjustable setting), no additional steps of capacity are added as long as difference between leaving-fluid temperature and set point is greater than 4° F (2.2° C) and rate of change in leaving-fluid temperature is greater than the selected pulldown control rate. If it has been less than 90 seconds since the last capacity change, compressors will continue to run unless a safety device trips. This prevents rapid cycling and also helps return oil during short on periods.

**Sensors —** Thermistors are used for temperature-sensing inputs to microprocessor. Additional thermistor sensors may be used as remote temperature sensors for optional LCWT (leaving chilled fluid temperature) reset.

- Cooler leaving chilled fluid temperature
- Cooler entering fluid (return) temperature
- Outside-air temperature
- Compressor suction temperature

Two refrigerant pressure transducers are used in each circuit for sensing suction and discharge pressure. The microprocessor uses these inputs to control capacity, the electronic expansion valve, and fan cycling.

- Saturated condensing temperature
- Cooler saturation temperature

## Control sequence

**Off cycle —** If ambient temperature is below 36 F (2 C), cooler heaters (if equipped) are also energized.

**Start-up —** After control circuit switches on, the prestart process takes place, then microprocessor checks itself, starts pump (if configured) and waits for temperature to stabilize. The controlled pulldown feature limits compressor loading on start-up to reduce demand on start-up and unnecessary compressor usage. The microprocessor limits supply-fluid temperature decrease (start-up only) to 1° F (0.6° C) per minute.

**Capacity control —** On first call for cooling, microprocessor starts initial compressor and fan stage on lead circuit.

As additional cooling is required, additional compressors are energized.

Speed at which capacity is added or reduced is controlled by temperature deviation from set point and rate of temperature change of chilled fluid.

The Main Base Board (MBB) responds to temperature of supply chilled water to cycle the compressor(s) and to control compressor unloading and loading to match cooling load requirements.

Hot gas bypass valve is energized by the MBB. Valve allows hot gas to pass directly into the cooler circuit on the final step of unloading, maintaining constant suction pressure and permitting the unit to operate at lower loads with less compressor cycling.

On units equipped with the digital compressor option (available on sizes 010, 015, and 018-090), the control will integrate the modulation of the digital compressor into the capacity routine to match cooling load requirements. The digital compressor option will modulate in 13 steps for sizes 010 and 015, 22 steps for sizes 018-030, 44 steps for sizes 035-60, 55 steps for size 070 and 66 steps for sizes 080 and 090.

The digital scroll option provides better capacity control by incrementally modulating capacity effectively, increasing the number of compression stages compared to chillers that are not equipped with this option. The digital scroll compressor is not a variable speed device, it modulates the capacity output by allowing the scroll sets to separate during operation, alternating between full capacity and zero capacity. Utilizing a fixed timeframe ratio, the percentage of time that the scroll set is engaged is the percentage capacity of that compressor.

There are 2 major advantages of this type of capacity control. First, there is closer capacity control operation with all the available capacity steps compared to the on/off cycling control of conventional scrolls. Second, there is much less wear factor on digital scrolls compared to standard scroll compressors because the digital scrolls are not subject to as many of the shutdown/restart cycles as conventional scrolls. Digital scrolls, rather than shutting off,

tend to remain on as they vary to deliver the correct capacity step.

**STANDARD CAPACITY CONTROL STEPS**

| UNIT 30RAP | STANDARD CAPACITY STEPS (%) |
|---|---|
| 010 | 0, 100 |
| 011 | 0, 40, 60, 100 |
| 015 | 0, 100 |
| 016 | 0, 40, 60, 100 |
| 018 | 0, 50, 100 |
| 020 | 0, 50, 100 |
| 025 | 0, 50, 100 |
| 030 | 0, 50, 100 |
| 035 | 0, 23, 46, 73, 100 |
| 040 | 0, 23, 46, 73, 100 |
| 045 | 0, 24, 48, 74, 100 |
| 050 | 0, 25, 50, 75, 100 |
| 055 | 0, 23, 46, 73, 100 |
| 060 | 0, 25, 50, 75, 100 |
| 070 | 0, 20, 40, 60, 80, 100 |
| 080 | 0, 15, 31, 46, 64, 82, 100 |
| 090 | 0, 17, 33, 50, 67, 83, 100 |
| 100 | 0, 19, 38, 57, 76, 100 |
| 115 | 0, 17, 33, 50, 67, 83, 100 |
| 130 | 0, 15, 30, 44, 63, 81, 100 |
| 150 | 0, 17, 33, 50, 67, 83, 100 |

**Additional information —** Detailed information on controls and operation is available in the Controls, Operation, and Troubleshooting literature included with each unit. Packaged service training programs are also available. Contact your Carrier representative for more information.

**High-efficiency variable condenser fans (30RAP chillers with Greenspeed® intelligence only) —** All fans on a circuit run at the same speed and are controlled by a VFD with special CCN software to maintain SCT (saturated condensing temperature) set point. The set point is calculated from operating conditions and adjusted to the most efficient operating point. The high-efficiency variable condenser fan option uses Danfoss VLT 102 variable frequency drives, each with a display. Drives are connected to the LEN communication bus. Fan speed is determined by the chiller controller and communicated to the drive to provide excellent part load efficiency and reduced sound level operation over the life of the chiller.

**Dual chiller control —** The *Comfort*Link controller allows 2 chillers (piped in parallel) to operate as a single chilled water plant with standard control functions coordinated through the master chiller controller. This standard *Comfort*Link feature requires a communication link between the 2 chillers and an additional thermistor and well in the common supply line.

**Dynamic *Comfort*Link controls —** Dynamic *Comfort*Link controls keep the chiller on line during periods of extreme operating conditions. If the entering fluid temperature is 85 F (29 C) or higher and the saturated suction temperature is 60 F (16 C) or higher the maximum operating pressure (MOP) feature limits the suction to keep the chiller online. The control automatically starts the chiller in the unloaded state to eliminate the potential of compressor overload due to high head pressure or low suction pressure. The controller will equalize run time on each circuit through the lead/lag feature. If a circuit becomes disabled, the control will automatically set the active circuit to lead, keeping the chiller online at a reduced capacity.

**Standard *Comfort*Link controls with scrolling marquee display module —** A four-digit alphanumeric display shows all of the *Comfort*Link control codes (with 60-character expandable clear language), plus set points, time of day, temperatures, pressures, and superheat. Additional information can be displayed all at once with the accessory Navigator™ display.

**Navigator display module —** An optional 4-line, 20-character per line display is also available as a field-installed accessory.

**Low-temperature override —** This feature prevents LCWT (leaving chilled fluid temperature) from overshooting the set point and possibly causing a nuisance trip-out by the freeze protection.

**High-temperature override —** This feature allows chiller to add capacity quickly during rapid load variations.

**Abnormal conditions —** All control safeties in chiller operate through compressor sensor board and the microprocessor.

Loss of feedback signal to the MBB will cause the compressor(s) to shut down. For other safeties, microprocessor makes appropriate decision to shut down a compressor due to a safety trip or bad sensor reading and displays appropriate failure code on the display. Chiller holds in safety mode until reset. It then reverts to normal control when unit is reset.

**Low-pressure safety —** Safety cuts out if system pressure drops below minimum.

**High-pressure cutout —** Switch shuts down compressors if compressor discharge pressure increases to 650 psig (4482 kPa).

**Compressor anti-cycling —** This feature limits compressor cycling.

**Loss of flow protection —** Proof of flow switches are standard and installed on all 30RAP chillers.

**Sensor failures —** Failures are detected by the microprocessor.

**Temperature reset —** The energy management module (EMM) is required for 4 to 20 mA reset of LCWT in constant fluid systems. Reset by return fluid, outdoor-air temperature, or space temperature does not require this option. Reset reduces compressor power usage at part load when design LCWT is not necessary. Humidity control should be considered since higher coil temperatures resulting from reset will reduce latent heat capacity. Three reset options are offered, based on the following:

Return-fluid temperature — Increases LCWT set point as return (or entering) fluid temperature decreases (indicating load decrease). Option may be used in any application where return fluid provides accurate load indication. Limitation of return fluid reset is that LCWT may only be reset to value of design return fluid temperature.

Outdoor-air temperature — Increases LCWT as outdoor ambient temperature decreases (indicating load decrease). This reset should be applied only where outdoor ambient temperature is an accurate indication of load.

Space temperature — Increases LCWT as space temperature decreases (indicating load decrease). This reset should be applied only where space temperature is an accurate indication of load. An accessory thermistor and the energy management module accessory is required.

For details on applying a reset option, refer to unit Controls, Operation, and Troubleshooting literature. Obtain ordering part numbers for reset option from the Packaged Chiller Builder program or contact your local Carrier representative.

**Accessory controls —** Demand can be limited by controlling the chiller capacity through the demand limit control (the energy management module is required for this function). This FIOP (factory-installed option)/accessory interfaces with microprocessor to control unit so that chiller's kW demand does not exceed its setting. It is activated from an external switch or a 4 to 20 mA signal.

The standard *Comfort*Link controller is programmed to accept various accessory temperature reset options (based on outdoor-air temperature [standard], return-fluid temperature, or space temperature), that reset the LCWT. An accessory thermistor for space temperature reset is required. The energy management module (EMM) is only required for temperature reset that is initiated by a 4 to 20 mA signal.

**Demand limit —** If applied, the demand limit function limits the total power draw of unit to selected point by controlling number of operational compressors during periods of peak electrical demand.

The energy management module is required for either 2-stage or 4 to 20 mA demand limit.

**Electronic expansion valve (EXV) —** The EXV controls refrigerant flow to the cooler for different operating conditions by moving an orifice to increase or decrease the flow area through the valve based on microprocessor input. The orifice is positioned by a stepper motor and is monitored every 3 seconds. The EXV maintains approximately 9° F (5° C) refrigerant superheat entering the compressor.

**Diagnostics —** The microprocessor may be put through a service test (see Controls, Operation, and Troubleshooting literature). Service test confirms microprocessor is functional, informs observer through display the condition of each sensor and switch in chiller, and allows observer to check for proper operation of fans and compressors.

**Default settings —** To facilitate quick start-ups, 30RAP chillers with *Comfort*Link controls are pre-configured with a default setting that assumes stand-alone operation supplying 44 F (6.7 C) chilled water.

Configuration settings will be based on any options or accessories included with the unit at the time of manufacturing.

Date and time are set to U.S.A. Eastern Time zone and will need reconfiguring based on location and local time zone. If operation based on occupancy scheduling is desired, this will also need to be set during installation.

**Ice duty —** *Comfort*Link controls have the capability of reduced leaving fluid temperature operation for thermal storage, or ice duty. The optional energy management module includes input contacts for the "ice done" signal generated by the thermal storage control system. The ice duty feature may be configured to start on an external input command or by the *Comfort*Link standard internal scheduling function. Ice duty may be used in combination with any other standard features offered by the energy management module and *Comfort*Link controls.

The production of ice, which is stored for peak cooling demands, can significantly decrease energy costs. The unit produces ice (normally at night) by supplying ice storage tanks with low temperature cooling fluid. The chiller takes advantage of reduced ambient conditions at night for ice-making mode, so the capacity suffers a lower penalty for the low leaving fluid temperatures.

At peak cooling demands the chiller and the stored ice may share the cooling load to reduce operating costs. The thermal storage system may potentially reduce the size of the chiller plant required to meet demand loads.

# Typical control wiring schematic

NOTES:

1. FACTORY WIRING IS IN ACCORDANCE WITH UL 1995 STANDARDS. FIELD MODIFICATIONS OR ADDITIONS MUST BE IN COMPLIANCE WITH ALL APPLICABLE CODES.

2. ALL UNITS OR MODULES HAVE SINGLE POINT PRIMARY POWER CONNECTION. MAIN POWER MUST BE SUPPLIED FROM A FIELD OR FACTORY SUPPLIED DISCONNECT.

3. WIRING FOR MAIN FIELD SUPPLY MUST BE RATED 75C. USE COPPER CONDUCTORS ONLY.
   a. INCOMING WIRE SIZE RANGE FOR TERMINAL BLOCK WITH MCA UPTO 175 AMPS IS 14 AWG TO 2/0 FOR 10-60 TON CHILLERS .
   b. INCOMING WIRE SIZE RANGE FOR TERMINAL BLOCK WITH MCA FROM 175.1 AMPS TO 335 AMPS IS 6 AWG TO 400 KCMIL FOR 10-60 TON CHILLERS.
   c. INCOMING WIRE SIZE RANGE FOR TERMINAL BLOCK WITH MCA UPTO 420 AMPS IS 2 AWG TO 600KCMIL FOR 70-150 TON CHILLER.
   d. INCOMING WIRE SIZE RANGE FOR TERMINAL BLOCK WITH MCA FROM 420.1 AMPS TO 760 AMPS IS 6 AWG TO 500 KCMIL(TWO OPENINGS PER POLE) FOR 70-150 TON CHILLERS.
   e. INCOMING WIRE SIZE RANGE FOR NON FUSED DISCONNECT WITH MCA UPTO 100 AMPS IS 14AWG TO 3/0.
   f. INCOMING WIRE SIZE RANGE FOR NON-FUSED DISCONNECT WITH MCA FROM 100.1 AMPS TO 250 AMPS IS 6AWG TO 350 KCMIL.
   g. INCOMING WIRE SIZE RANGE FOR NON FUSED DISCONNECT WITH MCA FROM 250.1 TO 600 AMPS IS 3/0 AWG TO 500KCMIL (TWO OPENINGS PER POLE)

4. REFER TO CERTIFIED DIMENSIONAL DRAWINGS FOR EXACT LOCATIONS OF THE MAIN POWER AND CONTROL POWER ENTRANCE LOCATIONS.

5. TERMINALS 21 AND 25 OF THE LVT ARE FOR CONTROL OF CHILLED WATER PUMP1 (CWP1) STARTER. TERMINALS 21 AND 24 OF THE LVT ARE FOR CONTROL OF CHILLED WATER PUMP2 (CWP2) STARTER. THE MAXIMUM LOAD ALLOWED FOR THE CHILLED WATER PUMP RELAY IS 5 VA SEALED, 10 VA INRUSH AT 24 V. FIELD POWER SUPPLY IS NOT REQUIRED.

6. TERMINALS 18 AND 21 OF LVT ARE FOR AN ALARM RELAY. THE MAXIMUM LOAD ALLOWED FOR THE ALARM RELAY IS 5 VA SEALED, 10 VA INRUSH AT 24V. FIELD POWER SUPPLY IS NOT REQUIRED.

7. MAKE APPROPRIATE CONNECTIONS TO LVT AS SHOWN FOR ENERGY MANAGEMENT BOARD OPTIONS. THE CONTACTS FOR DEMAND LIMIT AND ICE DONE OPTIONS MUST BE RATED FOR DRY CIRCUIT APPLICATION CAPABLE OF HANDLING A 24VAC LOAD UP TO 50 MA. INSTALLATION OF OPTIONAL ENERGY MANAGEMENT BOARD REQUIRED.

8. REMOVE JUMPER BETWEEN TERMINALS 11 AND 17 WHEN FIELD CWPI IS INSTALLED.

9. TERMINALS 13 & 14 OF TB5 ARE FOR FIELD EXTERNAL CONNECTIONS FOR REMOTE ON-OFF. THE CONTACTS MUST BE RATED FOR DRY CIRCUIT APPLICATION CAPABLE OF HANDLING A 24VAC LOAD UP TO 50MA.

LEGEND:

ALM R - ALARM RELAY (24V) 5 VA MAX
AWG - AMERICAN WIRE GAUGE
CWP - CHILLED WATER PUMP
CWPI - CHILLED WATER PUMP INTERLOCK
EMM - ENERGY MANAGEMENT MODULE
LVT - LOW VOLTAGE TERMINAL STRIP
SPT - SPACE TEMPERATURE

FIELD POWER WIRING
FIELD CONTROL WIRING
FACTORY INSTALLED WIRING
FACTORY INSTALLED OPTION

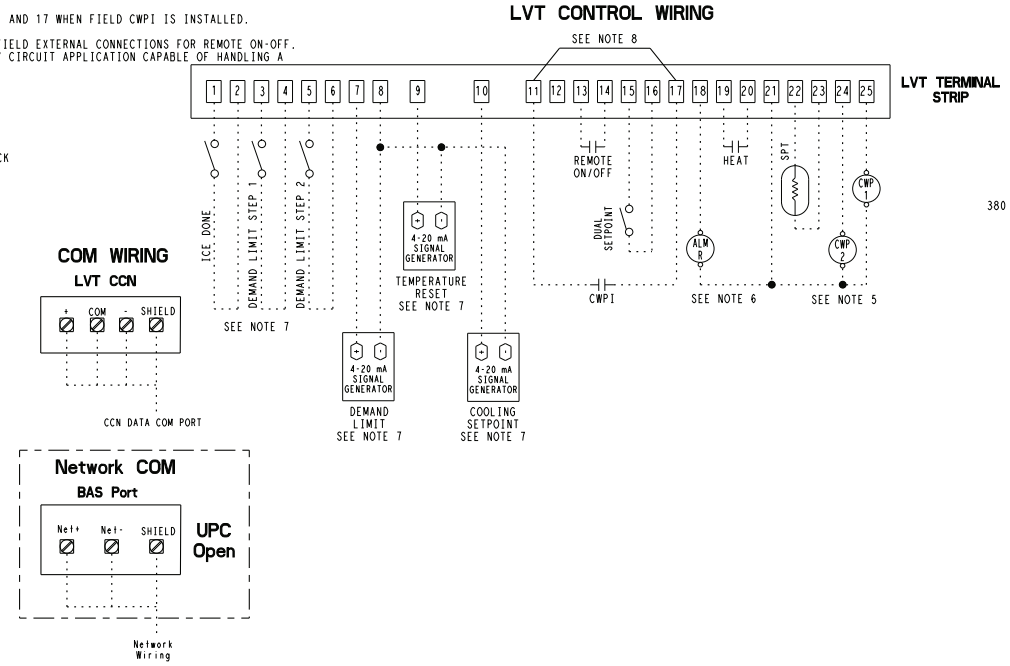


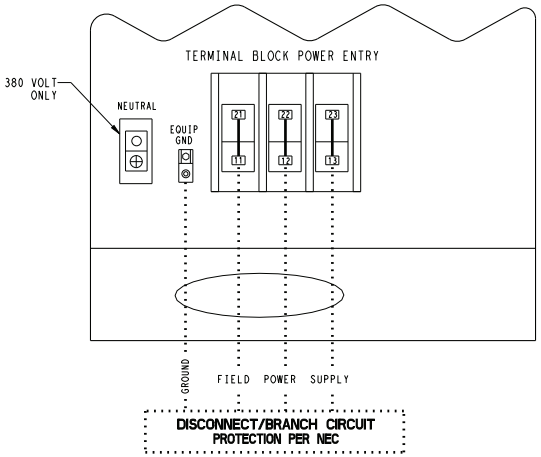


TERMINAL BLOCK

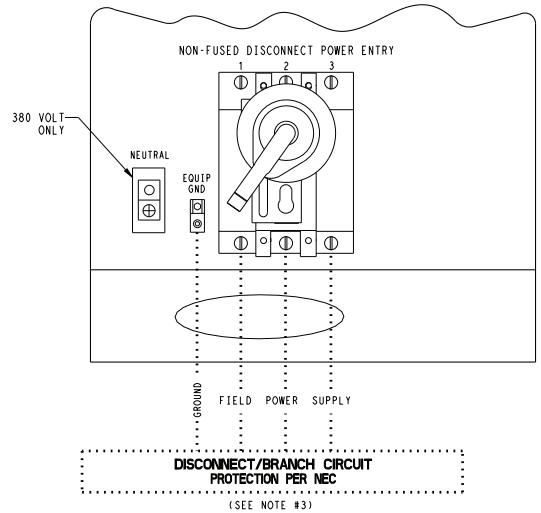


NON-FUSED DISCONNECT

## Chiller location and clearances

***The 30RAP unit must be installed outdoors.***

Do not locate near sound sensitive areas without proper acoustic consideration. For applications requiring mounting a chiller on a building rooftop, consideration should be given to using rubber-in-shear or spring isolators to minimize structure-borne transmission. Unit must be level when installed to ensure proper oil return to the compressors. Clearances must be provided around chillers for airflow, service and local code requirements. See dimensional drawings for specific unit clearance requirements. Ensure adequate clearance between adjacent chillers is maintained.

For 30RAP010-060: When parallel chillers are aligned such that coils face each other, a minimum of 6 ft (1829 mm) is recommended. When the parallel arrangement has only one coil drawing air from the space between chillers, a minimum of 3.5 ft (1067 mm) is recommended. When parallel chillers have no coils facing each other (a back-to-back arrangement), be sure to maintain the larger of the recommended service clearances associated with each chiller (see the certified drawings). Due to NEC (National Electric Code, U.S.A.) regulations, a minimum clearance of 4 ft (1219 mm) must be maintained on the side of the chiller that has an electrical box. Chiller fan discharge must be at least as high as adjacent solid walls. Installation in pits is not recommended.

**30RAP010-060 MULTIPLE UNIT SEPARATION**

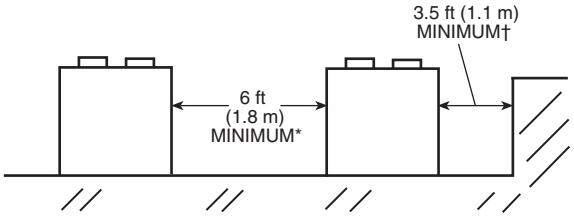


* Minimum for when coils face each other. Less clearance is required in other configurations.
† Clearance of 3.5 ft is required when a coil faces the wall. When there is no coil facing the wall, see the certified drawing for the required service clearance.

**30RAP070-150 MULTIPLE UNIT SEPARATION**

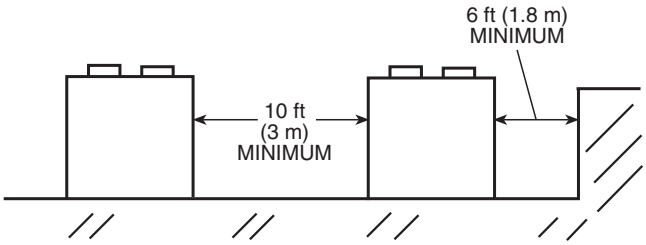


For 30RAP070-150: When chillers are arranged in parallel, a minimum of 10 ft (3048 mm) between chillers is recommended. Acceptable clearance on the cooler connection side or end opposite the control box of the unit can be reduced to 3 ft (1 m) without sacrificing performance as long as the remaining three sides are unrestricted. Acceptable clearance on the side with a control box can be reduced to 4 ft (1.3 m) due to NEC (National Electric Code, U.S.A.) regulations, without sacrificing performance as long as the remaining three sides are unrestricted. Clearances between chillers in dual chiller applications may be reduced to 6 ft (1.8 m) without sacrificing performance provided the remaining sides are unrestricted. For acceptable clearance with layout involving more than 2 chillers, contact application engineering.

## Oversizing chillers

Oversizing chillers by more than 15% at design conditions must be avoided as the system operating efficiency is adversely affected (resulting in greater or excessive electrical demand). When future expansion of equipment is anticipated, install a single chiller to meet present load requirements and add a second chiller to meet the additional load demand. It is also recommended that 2 smaller chillers be installed where operation at minimum load is critical. The operation of a smaller chiller loaded to a greater percentage over minimum is preferred to operating a single chiller at or near its minimum recommended value. Hot gas bypass should not be used as a means to allow oversizing chillers. Hot gas bypass should be given consideration where substantial operating time is anticipated below the minimum unloading step.

## Multiple chillers

Where chiller capacities greater than can be supplied by a single 30RAP chiller are required, or where standby capability is desired, chillers may be installed in parallel. Units may be of the same or different sizes with this piping arrangement. However, cooler flow rates must be balanced to ensure proper flow to each chiller.

When multiple 30RAP chillers are applied in parallel, and the chillers include the optional hydronic package (60 Hz applications only) which contains expansion tanks (sizes 010-060), the individual chiller expansion tanks must be disconnected and a single field-supplied expansion tank must be installed in the common header.

Unit software is capable of controlling two parallel units as a single plant by making use of the dual chiller control feature. Refer to the Controls, Start-up, Operation, Service and Troubleshooting guide for further details. The accessory Chillervisor System Manager can be used to ensure proper staging sequence of up to 8 chillers arranged in a parallel configuration. Refer to the accessory Chillervisor System Manager installation instructions for further details.

If the dual chiller algorithm is used, and the machines are installed in parallel, one chiller must be configured as the master chiller and the other as the slave. With this configuration, an additional leaving fluid temperature thermistor must be installed as shown in the figure on page 95.

Parallel chiller control with dedicated pumps is recommended. The chiller must start and stop its own water pump located in its own piping. Check valves are required at the discharge of each pump (*when the factory hydronic package option is chosen [60 Hz only], and* ***dual pumps*** *are selected, the check valves are automatically*

*supplied*). If pumps are not dedicated for each chiller, then isolation valves are required. Each chiller must open and close its own isolation valve through the unit control (the valve must be connected to the pump outputs).

If a series application is required, the master/slave control feature cannot be used. Hydronic pump packages may not be applied in series applications.

**PARALLEL CHILLER INSTALLATION**

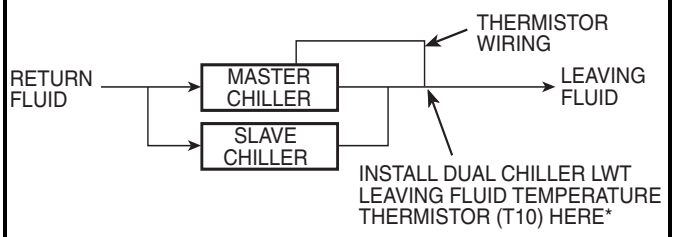


*Depending on piping sizes, use either:
- HH79NZ014 sensor/10HB50106801 well (3-in. sensor/well)
- HH79NZ029 sensor/10HB50106802 well (4-in. sensor/well)

## Series chillers

Where a large temperature drop (greater than 20° F [11.1° C]) is desired, or where chiller capacities greater than what can be supplied by a single 30RAP chiller are required, or where standby capability is required, chillers may be installed in series. The leaving fluid temperature sensors need not be relocated. However, the cooler minimum entering fluid temperature limitations should be considered for the chillers located downstream of other chillers.

## Cooler water temperature

1. Maximum leaving chilled water (fluid) temperature (LCWT) for the unit is 60 F (15.6 C). Unit can start and pull down with up to 95 F (35 C) entering-fluid temperature. It is recommended that entering-fluid temperature not exceed 70 F (21.1 C).
2. Minimum LCWT for fresh water applications is 40 F (4.4 C). For leaving-fluid temperatures between 14 and 39.9 F (–10.0 C and 4.4 C) an inhibited antifreeze solution in the fluid loop is required, but no modification to the 30RAP chiller (accessory medium temperature brine, for example) is required.

NOTE: For leaving-fluid temperatures below 35 F (2 C), neither hot gas bypass nor the digital compressor option are to be employed.

NOTE: Water flowing through cooler should not exceed 100 F (38 C).

NOTE: The 30RAP010-060 chillers do not require a medium temperature brine modification at any temperature within the chiller application range which is as low as 14 F (–10 C) leaving-fluid temperature. For 30RAP070-150, the appropriate field charge adjustment is required. See Controls, Start Up, Operation, Service, and Troubleshooting Guide for details.

## Strainers

A 40 mesh strainer is installed in the cooler fluid inlet line, just ahead of the cooler.

**STRAINER REQUIREMENTS**

| APPLICATION | 30RAP WITH BRAZED PLATE HEAT EXCHANGER | |
|---|---|---|
| | With Hydronic Package* | Without Hydronic Package |
| | Type of Strainer | |
| Closed Loop | 40 Mesh (Factory Supplied) | 40 Mesh (Factory Supplied) |
| Open Loop | See Note | See Note |

* Unlike other air-cooled models, 30RAP units with a hydronic package are not shipped with (and do not require) a fine mesh start-up strainer.

NOTE: Refer to the Water Quality Characteristics and Limitations table on page 99 for water requirements. Open-loop systems do not typically meet these requirements. Water treatment must be considered to satisfy this criterion.

## Cooler flow/range

Ratings and performance data in this publication are for a cooling temperature rise of 10° F (6° C). The 30RAP chillers may be operated at a different temperature rise, providing flow limits are not exceeded and corrections to system guidelines are made. For minimum and maximum cooler flow rates, see the Minimum and Maximum Cooler Flow Rates table. A high flow rate is generally limited by the maximum pressure drop that can be tolerated by the unit. The 30RAP chillers are designed for a full load temperature rise of 3° to 20° F (1.7° to 11.1° C). Use the Packaged Chiller Builder Program to obtain the rating if a temperature rise other than 10° F (6° C) is used.

**Minimum cooler flow (maximum cooler temperature rise) —** The minimum cooler flow for standard units is shown in Minimum and Maximum Cooler Fluid Flow Rates table. When system design conditions require a lower flow (or higher rise) than the minimum allowable cooler flow, follow the recommendations below.

- Multiple smaller chillers may be applied in series, each providing a portion of the design temperature rise.
- Cooler fluid may be recirculated to raise the flow rate to the chiller. The mixed temperature entering the cooler must be maintained to a minimum of at least 3° F (1.7° C) above the LCWT and to a maximum of no more than 20° F (11.1° C) above the LCWT.

NOTE: Recirculation flow is shown below.

**RECIRCULATION FLOW**

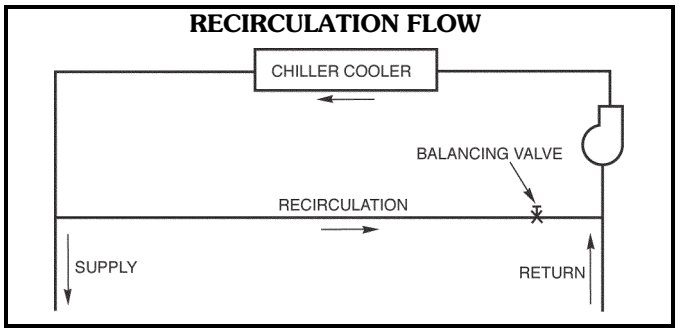


**Maximum cooler flow —** The maximum cooler flow (approximately 3° F [1.7° C] rise) results in a practical maximum pressure drop through cooler.

Return fluid may bypass the cooler to keep the pressure drop through the cooler within acceptable limits. This permits a higher delta T with lower fluid flow through cooler

and mixing after the cooler. The mixed temperature entering the cooler must be maintained to a minimum of at least 3° F (1.7° C) above the LCWT and to a maximum of no more than 20° F (11.1° C) above the LCWT.

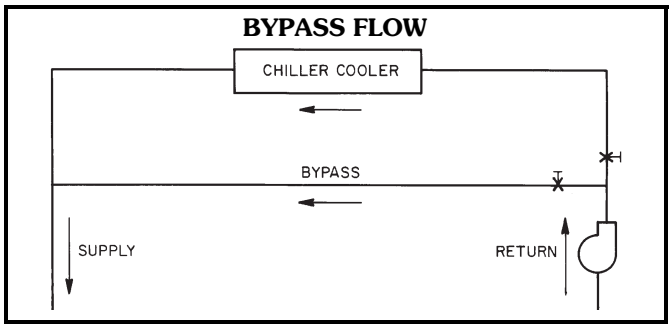


## Variable cooler flow rates

Variable flow rates may be applied to a standard chiller. The unit will, however, attempt to maintain a constant leaving chilled water temperature. In such cases, minimum flow must be in excess of minimum flow given in the Minimum and Maximum Cooler Fluid Flow Rates table on page 98, and minimum fluid volume in circulation must be in excess of those values shown for normal air-conditioning applications in the Minimum Fluid Volume in Circulation table. Flow rate must change in steps of less than 10% per minute. Apply 6 gal. or more per ton (6.5 L per kW) water loop volume minimum if flow rate changes more rapidly.

All 30RAP chillers are available without a hydronic pumping package. For 60 Hz applications, a constant-speed pumping package is available on all sizes, or a pumping package with a variable-speed drive is available on sizes 070-150. Traditional pumping systems incorporate constant-speed drives and waste energy by relying upon throttling valves as the only means to control flow. A more energy-efficient approach to this issue is use a variable-speed drive.

The major cost of a pump over its lifetime will be energy consumption and maintenance, and both of these factors will be reduced using variable-speed pumping. Energy is saved by the combination of lowering the pump speed in conjunction with the resulting lowering of pumping system resistance when conditions permit. Maintenance benefits from the sensorless pumping system include the lack of the need to maintain remote sensors as well as the beneficial effects of lower speed/pressure on the pump and pump bearings.

Another advantage associated with variable-speed pumping is reduced system noise in part load operation when the pump is running at lower speeds. The 60 Hz variable-speed pump package offered on the 30RAP is offered both in single and dual-pump designs. In the dual pump case, in which one pump is the back-up of the other, each pump connection is fitted with an isolation valve which allows one pump to be isolated for service with the other pump still operating.

As already mentioned, the 30RAP variable-speed hydronic package employs sensorless technology. The term "sensorless" means that no remote sensors are required for pump operation. The sensorless pump control monitors system requirements for pump speed and power. The hydronic unit is provided with a pre-defined control curve to automatically adjust speed at all operating conditions. Pump performance and characteristic curves for multiple speeds are programmed into the speed-controller memory. The pre-programmed information includes power, pressure and flow throughout the entire range of the pump. During chiller operation, the power and speed of the pump are monitored. This enables the controller to establish the hydraulic performance, and to position the pump's head-flow characteristic. Although this curve is pre-defined, it is also fully field adjustable. The pump has a graphical user interface, and the graphic keypad can also be used to allow manual pump speed control.

This variable-speed pumping system easily connects to BMS (Building Management System) systems (BACnet is standard, and LON can be obtained via special order). The pumps may be controlled directly by the BMS system. The sensorless feature can also be switched off to allow the use of either a 0 to 10 VDC signal or a 0 to 20 mA signal.

For multiple chiller applications employing the variable-speed pumping package, such as chillers operated in a parallel arrangement, the drives must be connected by control wiring and set up to run the same speed. This is to prevent surging or hunting of the speed set point. One drive will act as the master while the other slave drive will run at the same speed. The master drive may be controlled by a 0 to 10 VDC signal, a 0 to 20 mA signal, or a BMS. The drive must be configured to not use the sensorless function in this arrangement.

A typical example of a chiller operating with a variable-speed pumping system would be the case when the user requires the chiller to operate with a constant fluid temperature difference as the load is reduced. This can be accomplished with the 30RAP variable-speed pumping package (60 Hz only) with the understanding that the minimum allowable flow for the chiller must be respected. Once that limit is reached, the flow cannot be further reduced. To accomplish this purpose, the minimum speed of the drive is pre-set based upon the chiller size that is being employed.

As a specific example, let us say the schedule calls for a 90-ton, fresh-water chiller, and it is desired to have a constant 10-degree temperature difference in part load operation (say 54 to 44 F). The schedule calls for 216 gpm at full load based upon the desired capacity and the fluid temperature difference. A constant temperature difference in part load operation is essentially the same as providing flow in direct proportion to chiller load. In the present example, this means that 100% load will run at the scheduled 216 gpm, 90% load will be 194 gpm, etc. down to the minimum allowable flow for this unit size, which, in the case of a 30RAP090 unit, is 107 gpm. The chiller in this example will therefore be able to run down to just under 50% load while approximately maintaining a constant 10 degree fluid temperature difference, and then the flow will be held constant for all lower loads. Throughout the range in which flow is reduced (down to minimum allowable flow), the pump speed is proportionally reduced, resulting in pump energy savings.

## Fluid loop volume

The minimum volume of fluid required to be in circulation is a function of the number of compressors in the chiller, the type of application, and whether or not a device providing additional unloading steps is employed. The minimum fluid in circulation must equal or exceed the values in the following table. Note that in process cooling applications, or for operation at ambient temperatures below 32 F (0° C) with low loading conditions, there should be more volume than is required for normal air-conditioning applications.

**MINIMUM FLUID VOLUME IN CIRCULATION**

| 30RAP UNIT SIZE | NORMAL AIR CONDITIONING APPLICATION gal/ton (L per kW) | | | PROCESS COOLING OR LOW AMBIENT OPERATION APPLICATION gal/ton (L per kW) | | |
|---|---|---|---|---|---|---|
| | Std Unit | HGBP | Digital | Std Unit | HGBP | Digital |
| **010, 015** | 12 (13) | N/A | 3 (3.3) | 12 (13) | N/A | 6 (6.5) |
| **011, 016** | 12 (13) | N/A | N/A | 12 (13) | N/A | N/A |
| **018-030** | 6 (6.5) | 4 (4.3) | 3 (3.3) | 10 (10.8) | 10 (10.8) | 6 (6.5) |
| **035-150** | 3 (3.3) | 3 (3.3) | 3 (3.3) | 6 (6.5) | 6 (6.5) | 6 (6.5) |

LEGEND

**HGBP** — Hot Gas Bypass
**N/A** — Not Available

To achieve this fluid volume, it is often necessary to install a tank in the loop. The tank should be baffled to ensure there is no stratification and that water (or brine) entering the tank is adequately mixed with liquid in the tank. A fluid storage tank is available as an accessory.

The piping between the chiller and the accessory tank can be done to allow the tank to be on the return side of the chiller (tank piped to chiller inlet) or the supply side of the chiller (tank piped to the chiller outlet). However, it is recommended that the tank be piped to the return side of the chiller to buffer any changes in load to allow more stable chiller operation.

**TANK INSTALLATION**

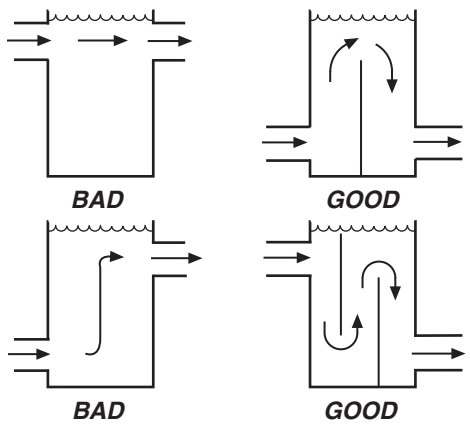


## Tank volume and weight

A properly baffled storage tank is available as an accessory on 30RAP010-060 units. These tanks are designed to physically fit beneath the corresponding 30RAP unit, taking up the same footprint. Available volume is as follows:

30RAP010-016 83 gallons (314 liters)
30RAP018-030 119 gallons (450 liters)
30RAP035-060 241 gallons (912 liters)

Storage tank weight (water weight included) is as follows:

30RAP010-016 1673 lb (759 kg)
30RAP018-030 2193 lb (995 kg)
30RAP035-060 4361 lb (1978 kg)

NOTE: This tank will obtain power from the main unit. No separate power source is required.

NOTE: Units with storage tanks weigh considerably more than units without tanks.

## Cooler fouling factor

The fouling factor used to calculate tabulated ratings is 0.00010 $ft^2 \cdot hr \cdot °F/Btu$ (0.000018 $m^2 \cdot °C/W$). As fouling factor is increased, unit capacity decreases and compressor power increases. Use the NACO (North American Commercial Operation) Packaged Chiller Builder for corrections to published ratings.

## Cooler and hydronic system freeze protection

Freeze protection for down to –20 F (–28.9 C) for 60 Hz applications and –15 F (–26 C) for 50 Hz applications for the cooler and hydronic package (when available, 60 Hz only) is available as a factory-installed option. Since power is sometimes lost for extended periods during winter storms, freeze protection provided by heater tapes will be effective only if a back-up power supply can be assured for the unit's control circuit, heater and cooler pump. If not protected with an antifreeze solution, draining the cooler and outdoor piping is recommended if the system will not be used during freezing weather conditions.

Two conditions that must be considered when determining antifreeze concentration are leaving water set point and ambient freeze conditions. Both of these parameters can help determine the recommended concentration level. Higher concentration must be used to adequately protect the machine.

NOTE: Use only antifreeze solutions approved for heat exchanger duty.

For applications in which the leaving water temperature set point is less than 40 F (4.4 C), a suitable inhibited antifreeze solution must be used. The solution concentration must be sufficient to protect the chilled water loop to a freeze protection (first crystals) concentration of at least 15° F (8.3° C) below the leaving water temperature set point.

If the chiller refrigerant or fluid lines are in an area where ambient conditions fall below 34 F (1° C), it is required that an antifreeze solution be added to protect the unit and fluid piping to a temperature of 15° F (8.3° C) below the lowest anticipated ambient temperature.

**MINIMUM AND MAXIMUM COOLER FLOW RATES**

| 30RAP SIZE | MINIMUM COOLER FLOW RATE (gpm)* | MAXIMUM COOLER FLOW RATE (gpm) | MINIMUM COOLER FLOW RATE (l/s)* | MAXIMUM COOLER FLOW RATE (l/s) |
|---|---|---|---|---|
| **010,011** | 13 | 50 | 0.8 | 3.2 |
| **015,016** | 17 | 66 | 1.1 | 4.2 |
| **018** | 20 | 78 | 1.3 | 4.9 |
| **020** | 23 | 91 | 1.5 | 5.7 |
| **025** | 28 | 112 | 1.8 | 7.1 |
| **030** | 33 | 133 | 2.1 | 8.4 |
| **035** | 41 | 164 | 2.6 | 10.3 |
| **040** | 47 | 186 | 3.0 | 11.7 |
| **045** | 53 | 209 | 3.3 | 13.2 |
| **050** | 57 | 228 | 3.6 | 14.4 |
| **055** | 63 | 251 | 4.0 | 15.8 |
| **060** | 68 | 270 | 4.3 | 17.0 |
| **070** | 87 | 310 | 5.5 | 19.6 |
| **080** | 98 | 350 | 6.2 | 22.1 |
| **090** | 107 | 382 | 6.8 | 24.1 |
| **100** | 123 | 444 | 7.8 | 28.0 |
| **115** | 140 | 503 | 8.8 | 31.7 |
| **130** | 159 | 574 | 10.0 | 36.1 |
| **150** | 175 | 629 | 11.0 | 39.6 |

* For minimum cooler flow rate with brine applications, refer to E-CAT software performance tables.

Select concentration based on either burst or freeze protection as dictated by the application. If the chiller does not operate during the winter, nor is a start-up expected, a burst protection concentration is recommended. This concentration may not be high enough to pump the fluid through the unit. Burst protection is typically a lower concentration that will provide better performance from the machine. If the chiller does operate during winter, a freeze protection concentration is recommended. This concentration will be high enough to keep the fluid in a condition that it can be pumped at low ambient conditions.

IMPORTANT: Glycol anti-freeze solutions are highly recommended since heater tapes provide no protection in the event of a power failure.

Consult glycol fluid manufacturers for burst protection recommendations and fluid specifications.

## High ambient temperature operation

High outdoor ambient chiller start-up and operation is possible for standard 30RAP chillers at ambient temperatures up to 120 F (50 C) at nominal voltage. The unit will additionally be able to stay running at reduced capacity up to 125 F (52 C).

## Low ambient temperature operation

Units will start and operate down to –20 F (–29 C) on size 010-016 units, 45 F (7 C) on size 018-030 units, and 32 F (0° C) on size 035-150 units as standard.

Start-up and operation down to as low as –20 F (–29 C) ambient temperature for sizes 018-150 require the inclusion of either low ambient head pressure control or high-efficiency variable condenser fans. (To achieve these low ambient temperatures, no additional option needs to be selected on unit sizes 010-016 since sizes 010 and 015 automatically include low ambient head pressure control and sizes 011 and 016 automatically include high-efficiency variable condenser fans.) Wind baffles are also required for such low-temperature applications. Inhibited propylene glycol or other suitable corrosion-resistant anti-freeze solution must be field supplied and installed in all units for unit operation below 32 F (0° C). Solution must be added to fluid loop to protect loop down to 15° F (8° C) below minimum operating ambient temperature. Concentration should be based on expected minimum temperature and either "Burst" or "Freeze" protection levels. At least 6 gal. per ton (6.5 L per kW) of fluid volume is the recommended minimum for a moderate system load.

NOTE: In order for a chiller to operate at –20 F (–29 C) ambient temperature, the minimum load on the chiller must be above the minimum step of unloading.

NOTE: As an alternative to requiring a glycol solution, the cooler may be remotely located. Burying refrigerant lines is never permitted.

## High-efficiency variable condenser fans

Highly efficient part load performance is available with variable speed condenser fan motors controlled by variable speed drives. In most applications, the chiller will run at part load conditions the vast majority of the time, and this is particularly the case if the application has a 24/7 duty cycle. This option will lower utility costs while producing a scroll compressor design that is best-in-class in part load efficiency. This is the essence of 30RAP chillers with Greenspeed® intelligence. (High-efficiency variable condenser fans are not available with sizes 010, 015, and 070-150.)

## Altitude correction factors

Correction factors must be applied to standard ratings at altitudes above 2000 ft ( 610 m). Use the NACO Packaged Chiller Builder to determine the altitude effect on performance.

## Water system overview (closed loop systems only)

The 30RAP chillers are designed for use with closed systems, meaning that there is no more than one water-air interface in the water loop. Cooling tower loops, for example, have two water-air interfaces (sump and nozzles) and would thus be classified as open, whereas a correctly designed chilled water loop with the only water-air interface being in the expansion tank is closed. Since closed and open water systems behave very differently, the following assumes that the chilled water loop is closed. A system installed incorrectly such that air is not handled properly — pipe leaks, vent leaks, air in pipes, etc. — may behave as an open system and thus have unsatisfactory operation. Pump seal wear can also cause leaks that cause poor system operation.

Proper closed system design and installation procedures should be followed closely. The system must be constructed with pressure tight components and thoroughly tested for installation leaks. Factory-supplied hydronic systems are available for 60 Hz applications with single or dual (for back-up) pumps. The factory-installed system includes all of the components within the dashed lines shown in the figure on page 67.

Installation of water systems should follow sound engineering practice as well as applicable local and industry standards. Improperly designed or installed systems may cause unsatisfactory operation and/or system failure. Consult a water treatment specialist or appropriate literature for information regarding filtration, water treatment, and control devices. A typical installation with components that might be installed with the hydronic package of the 30RAP unit is shown on pages 64-66.

It is recommended that isolation (shutoff) valves be placed exterior to the unit to allow removal and service of the entire pump assembly, if necessary. Also, if the unit is isolated with valves, a properly sized pressure relief valve should be installed in the piping between the unit and the valves, following all applicable state and local codes.

## Water system cleaning

Proper water system cleaning is of vital importance. Excessive particulates in the water system can cause excessive pump seal wear, reduce or stop flow, and cause damage of other components. Water quality should be maintained within the limits indicated in the Water Quality Characteristics and Limitations table.

1. Install a temporary bypass around the chiller to avoid circulating dirty water and particulates into the pump package and chiller during the flush. Use a temporary circulating pump during the cleaning process. Also, be sure that there is capability to drain the system fully after cleaning.
2. Be sure to use a cleaning agent that is compatible with all system materials. Be especially careful if the system contains any galvanized or aluminum components. Both detergent-dispersant and alkaline-dispersant cleaning agents are available.
3. It is a good idea to fill the system through a water meter. This provides a reference point for the future for loop volume readings, but it also establishes the correct quantity of cleaner needed in order to get the required concentration.
4. Use a feeder/transfer pump to mix the solution and fill the system. Circulate the cleaning system for the length of time recommended by the cleaning agent manufacturer.
   a. After cleaning, drain the cleaning fluid and flush the system with fresh water.
   b. A slight amount of cleaning residue in the system can help keep the desired, slightly alkaline, water pH of 8 to 9. Avoid a pH greater than 10, since this will adversely affect pump seal components.
   c. A side stream filter is recommended during the cleaning process. Filter side flow rate should be enough to filter the entire water volume every 3 to 4 hours. Change filters as often as necessary during the cleaning process.
   d. Remove temporary bypass when cleaning is complete.

A 40 mesh strainer with a blow-down valve is standard on all 30RAP units, both with and without hydronic packages. The blow-down valve allows removal of particulates caught in the strainer without complete removal of the screen. A female NPT connection is provided on the valve, allowing hose connection for drainage outside the unit.

The *Comfort*Link controls provided have a built-in feature to remind building owners or operators to clean the strainer by discharging the blow-down valve at a pre-set time interval. Properly installed and cleaned systems will rarely need the strainer cleaned after the initial fill. This time interval is user-configurable.

**WATER QUALITY CHARACTERISTICS AND LIMITATIONS**

| WATER CHARACTERISTIC | QUALITY LIMITATION |
|---|---|
| **Alkalinity ($HCO_3^-$)** | 70 – 300 ppm |
| **Sulfate ($SO_4^{2-}$)** | Less than 70 ppm |
| **$HCO_3^-/SO_4^{2-}$** | Greater than 1.0 |
| **Electrical Conductivity** | 10 – 500 µS/cm |
| **pH** | 7.5 – 9.0 |
| **Ammonium ($NH_3$)** | Less than 2 ppm |
| **Chorides ($Cl^-$)** | Less than 300 ppm |
| **Free chlorine ($Cl_2$)** | Less than 1 ppm |
| **Hydrogen Sulfide ($H_2S$)*** | Less than 0.05 ppm |
| **Free (aggressive) Carbon Dioxide ($CO_2$)†** | Less than 5 ppm |
| **Total Hardness (dH)** | 4.0 – 8.5 |
| **Nitrate ($NO_3$)** | Less than 100 ppm |
| **Iron (Fe)** | Less than 0.2 ppm |
| **Aluminum (Al)** | Less than 0.2 ppm |
| **Manganese (Mn)** | Less than 0.1 ppm |

*Sulfides in the water quickly oxidize when exposed to air, requiring that no agitation occur as the sample is taken. Unless tested immediately at the site, the sample will require stabilization with a few drops of one Molar zinc acetate solution, allowing accurate sulfide determination up to 24 hours after sampling. A low pH and high alkalinity cause system problems, even when both values are within the ranges shown. The term pH refers to the acidity, basicity, or neutrality of the water supply. Below 7.0, the water is considered to be acidic. Above 7.0, water is considered to be basic. Neutral water contains a pH of 7.0.

†Dissolved carbon dioxide can either be calculated from the pH and total alkalinity values, shown below, or measured on the site using a test kit. Dissolved Carbon Dioxide, PPM = TA x $2^{[(6.3-pH)/0.3]}$ where TA = Total Alkalinity, PPM as $CaCO_3$.

### Condenser coil protection (*Enviro-Shield*™)

Refer to the environmental selection guides for more information. If the standard Novation® (microchannel) coil does not meet the corrosion requirements for a given application, additional coil options are available. For specific geographical recommendations, please refer to the NACO (North American Commercial Operations) Packaged Chiller Builder program.

**Aluminum fin/copper tube coils** (sizes 070-150 only) are constructed of seamless copper tubes mechanically bonded to aluminum fins. The fins have wavy enhancements. These condenser coils are recommended with remote cooler applications. These coils are not recommended for corrosive environments.

**Pre-coated aluminum-fin coils** (sizes 070-150 only) have a durable epoxy-phenolic coating applied to the fin prior to the fin stamping process to provide protection in mildly corrosive coastal environments. Pre-coated coils have an inert barrier between the aluminum fin and copper tube. This barrier electrically disconnects the dissimilar metals to minimize the potential for galvanic corrosion. This economical option provides substantial corrosion protection beyond the standard uncoated coil construction.

**Copper-fin coils** (sizes 070-150 only) provide increased corrosion resistance compared to aluminum fin coils. All-copper coils eliminate bimetallic construction to eliminate the potential for galvanic corrosion. Application in industrial environments is not recommended due to potential attack from sulfur, sulfur oxide, nitrogen oxides, carbon and several other industrial airborne contaminants.

**E-coated Novation® coils** have an extremely flexible and durable epoxy coating uniformly applied to all coil surfaces. Unlike brittle phenolic dip and bake coatings, e-coat provides superior protection with unmatched flexibility, edge coverage, metal adhesion, thermal performance and most importantly, corrosion resistance. E-coated coils provide this protection since all coil surfaces are completely encapsulated from environmental contamination. This option provides the best protection for Novation coil technology. E-coated aluminum microchannel coils shall be capable of withstanding an 8,000-hour salt spray test in accordance with the ASTM (American Society for Testing and Materials) B-117 Standard.

**E-coated aluminum-fin coils** (sizes 070-150 only) have the same flexible and durable epoxy coating as e-coated Novation coils. This option provides better protection compared to standard or pre-coated aluminum-fin coils in many environments.

**E-coated copper-fin coils** (sizes 070-150 only) have the same flexible and durable epoxy coating as other e-coated coils. However, this option combines the natural salt and environmental resistance of all-copper construction with the highest level of corrosion protection within the round-tube, plate-fin type of coils.

### Electrical/utility interests

**Energy management —** Use of energy management practices can significantly reduce operating costs, especially during off-peak modes of operation. Demand limiting and temperature reset are 2 techniques for accomplishing efficient energy management. See Demand Limiting (also called load shedding) section on this page for further details.

**Demand limiting (load shedding) —** When a utility's demand for electricity exceeds a certain level, loads are shed to keep electricity demand below a prescribed maximum level. Typically, this happens on hot days when air conditioning is most needed. The energy management module (EMM) can be added to accomplish this reduction. Demand may be limited on unit by resetting the fluid temperature, or by unloading the chiller to a given predetermined percentage of the load. Demand limit may also be driven by an external 4 to 20 mA signal. These features require a signal from an intelligent central control. Do not cycle demand limiter for less than 10 minutes on and 5 minutes off. Duty cycling cycles electrical loads at regular intervals regardless of need. This reduces the electrical operating costs of building by "fooling" demand indicating devices. Duty cycling of compressors or fans is not recommended since motor winding and bearing life will suffer from constant cycling.

### Remote on-off control

Remote on-off control may be applied by hard-wired connection (see Controls and Troubleshooting literature) or by connection to a Carrier Comfort Network® (CCN) system.

### Optional hydronic system selection (60 Hz applications only)

Select pump gpm from resulting chiller selection and total pressure loss in the system plus the chiller internal pressure loss.

NOTE: Maximum gpm (L/s), pressure and pump hp must not exceed maximum on pump curve.

NOTE: Optional hydronic system is available in constant-speed configuration on all models. It is also available in VFD configuration on sizes 070-150, as described in Variable Cooler Flow Rates section.

Pump flow can be reduced by using the factory-supplied triple-duty valve up to 10%. Beyond that, impeller trimming is recommended to reduce energy consumption. Follow local codes or ASHRAE 90.1 recommendations. Contact your Carrier representative for specific amount of trim required.

Expansion tank supplied (sizes 010-060 only) will allow loop expansion due to ambient fluctuations for loop volumes of up to the values in the table below. If loop volume exceeds the maximum loop volume, a larger expansion tank must be field supplied.

The supplied expansion tanks have the following specifications: 30RAP010-030 — 4.4 total gal. (17.0 L) and 3.2 gal. (12.4 L) acceptance volume, 30RAP035-060 — 10.3 total gal. (39.0 L) and 10.3 gal. (39.0 L) acceptance volume.

Maximum loop volume is based on typical system pressure of 12 psig (83 kPa) and 30 psig (207 kPa) of minimum and maximum pressures, and 100 F (37.8 C) mean temperature.

**MAXIMUM LOOP VOLUME**

| CONCENTRATION | 30RAP010-030 | | 30RAP035-060 | |
|---|---|---|---|---|
| | GAL. | L | GAL. | L |
| PURE WATER | 412 | 1560 | 1356 | 5131 |
| 10% EG | 239 | 906 | 795 | 3009 |
| 20% EG | 233 | 880 | 767 | 2902 |
| 30% EG | 206 | 781 | 692 | 2620 |
| 40% EG | 200 | 755 | 655 | 2478 |
| 10% PG | 233 | 880 | 767 | 2902 |
| 20% PG | 200 | 755 | 655 | 2478 |
| 30% PG | 170 | 645 | 561 | 2124 |
| 40% PG | 157 | 595 | 514 | 1947 |

LEGEND

**EG** — Ethlyene Glycol
**PG** — Propylene Glycol

Parallel chillers with hydronic packages require that pump inlets be equalized to prevent pump cavitation. Pump expansion tanks must be removed and located together in the common pump suction header. All materials needed for expansion tank relocation are field supplied. Appropriate measures must be taken for freeze protection.

## Air separation

For proper system operation, it is essential that water loops be installed with proper means to manage air in the system. This is typically done by the installing contractor. Free air in the system can cause noise, reduce terminal output, stop flow, or even cause pump failure due to pump cavitation. For closed systems, equipment should be provided to eliminate all air from the system.

The amount of air that water can hold in solution depends on the pressure and temperature of the water/air mixture. Air is less soluble at higher temperatures and at lower pressures. Therefore, separation can best be done at the point of highest water temperature and lowest pressure. Typically, this point would be on the suction side of the pump as the water is returning from the system or terminals. Generally speaking, this is the best place to install an air separator, if possible.

1. Install automatic air vents at all high points in the system. (If the 30RAP unit is located at the high point of the system, a vent can be installed on the piping entering the heat exchanger on the ¼-in. NPT female port.)
2. Install an air separator in the water loop, at the place where the water is at higher temperatures and lower pressures — usually in the chilled water return piping. On a primary-secondary system, the highest temperature water is normally in the secondary loop, close to the decoupler. Preference should be given to that point on the system. In-line or centrifugal air separators are readily available in the field.

It may not be possible to install air separators at the place of lowest pressure and highest temperature. In such cases, preference should be given to the points of highest temperature. It is important that pipe be sized correctly so that free air can be moved to the point of separation. Generally, a water velocity of at least 2 ft per second (0.6 m per second) will keep free air entrained and prevent it from forming air pockets.

Automatic vents should be installed at all physically elevated points in the system so that air can be eliminated during system operation. Provision should also be made for manual venting during the water loop fill. It is important that the automatic vents be located in accessible locations for maintenance purposes, and that they be located where they can be prevented from freezing.

## Minimum time to power chiller before start-up

In order to ensure that the crankcase heaters are provided sufficient time to raise the crankcase temperature to the required operating point, power must be applied to the chiller and the compressor circuit breakers must be on a minimum of 24 hours before chiller start-up. This requirement applies to sizes 070-150. It is also applicable to all remote cooler applications (all sizes).

**TYPICAL MULTIPLE CHILLER CONFIGURATION WITH AIR ELIMINATOR AND EXPANSION TANK LOCATION**

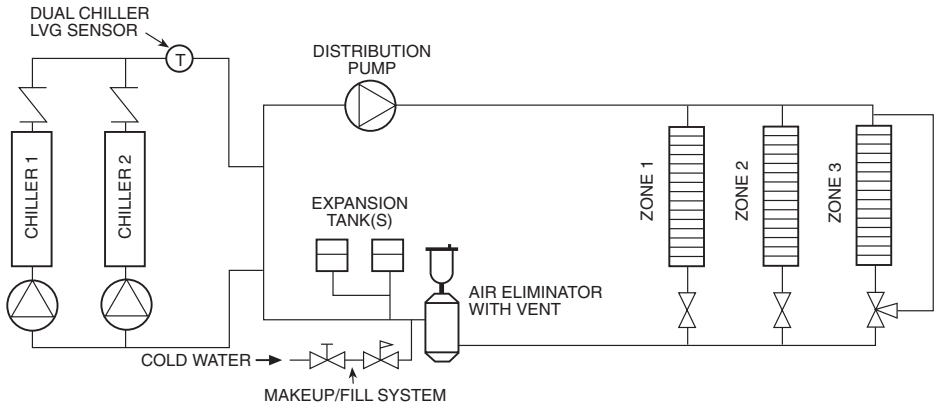

## Outdoor 50/60 Hz Air-Cooled Liquid Chiller

### HVAC Guide Specifications

Size Range: **10 to 150 Tons (35 to 528 kW) Nominal 10 to 60 Tons (35 to 211 kW) Nominal with Greenspeed® Intelligence**

Carrier Model Number: **30RAP**

**Part 1 — General**

1.01 SYSTEM DESCRIPTION

Microprocessor controlled, air-cooled liquid chiller for outdoor installation, utilizing scroll compressors, low sound fans, electronic expansion valve, optional hydronic pump system (60 Hz only), and fluid storage tank (storage tank on models 010-060 only).

For units that incorporate Greenspeed intelligence, all fans are controlled with variable speed fan drive motors. Chiller software shall be specifically developed to coordinate optimal fan speed for application conditions and provide refrigerant circuit optimization, resulting in higher part load efficiency and reduced acoustic levels.

1.02 QUALITY ASSURANCE

A. Unit shall be rated in accordance with AHRI (Air-Conditioning, Heating and Refrigeration Institute) Standard 550/590, latest edition (U.S.A.) and all units shall be ASHRAE (American Society of Heating, Refrigerating and Air-Conditioning Engineers) 90.1 compliant.

B. Unit construction shall comply with ASHRAE 15 Safety Code, UL (Underwriters Laboratories) latest edition, and ASME (American Society of Mechanical Engineers) applicable codes (U.S.A. codes).

C. Unit shall be manufactured in a facility registered to ISO (International Organization for Standardization) 9001 Manufacturing Quality Standard.

D. Unit shall be full load run tested at the factory.

1.03 DELIVERY, STORAGE AND HANDLING

A. Unit controls shall be capable of withstanding 150 F (66 C) storage temperatures in the control compartment.

B. Unit shall be stored and handled per unit manufacturer's recommendations.

**Part 2 — Products**

2.01 EQUIPMENT

A. General:

Factory assembled, single-piece chassis, air-cooled liquid chiller. Contained within the unit cabinet shall be all factory wiring, piping, controls, refrigerant charge (R-410A), and special features required prior to field start-up.

B. Materials of Construction:

1. Frame shall be of heavy-gage, galvanized steel.
2. Exterior panels shall be galvanized steel with a baked enamel powder or pre-painted finish.
3. Cabinet shall be capable of withstanding 500-hour salt spray test in accordance with the ASTM (American Society for Testing and Materials, U.S.A.) B-117 standard.

C. Fans:

1. Standard condenser fans shall be direct-driven (VFD [variable frequency drive] controlled on units with Greenspeed intelligence), 9-blade airfoil cross-section, reinforced polymer construction, shrouded-axial type, and shall be statically and dynamically balanced with inherent corrosion resistance.
2. The variable speed drives for the condenser fans on 30RAP units with Greenspeed intelligence shall include a DC link reactor.
3. Fan operation shall allow reduced sound levels during scheduled unoccupied operating periods. Manufacturers without unoccupied reduced sound capability shall submit $^1/_3$ octave band data and sound power data as measured according to AHRI 370 as confirmation of unit sound characteristics.
4. Air shall be discharged vertically upward.
5. Fans shall be protected by coated steel wire safety guards.

D. Compressor/Compressor Assembly:

1. Fully hermetic, direct-drive, scroll type compressors.
2. Compressor motors shall be cooled by refrigerant gas passing through motor windings and shall have either internal line break thermal and current overload protection or external current overload modules with compressor temperature sensors.
3. Compressors shall be mounted on rubber in shear vibration isolators.
4. Staging of compressors shall provide unloading capability. Digital compressor unloading control shall be available as an option (sizes 010, 015, and 018-090 only).
5. Each compressor (sizes 070-150 only) shall be equipped with crankcase heaters to minimize oil dilution. Crankcase heaters are not required on sizes 010-060 due to very low refrigerant charge.

E. Cooler:

1. Cooler shall be rated for a refrigerant working-side pressure of 505 psig (3482 kPa) on sizes 011-025, 565 psig (3896 kPa) on sizes 030-060, and 450 psig (3103 kPa) on sizes 070-150 and shall be tested for a maximum water-side pressure of 300 psig (2068 kPa) or 150 psig (1034 kPa) when optional hydronic package is installed.
2. Shall be single-pass, ANSI (American National Standards Institute) type 316 stainless steel, brazed plate construction.

3. Shell shall be insulated with $^3/_4$-in. (19 mm) closed-cell, polyvinyl-chloride foam with a maximum K factor of 0.28.
4. Shall incorporate 2 independent refrigerant circuits on sizes 035 to 150; sizes 010 to 030 shall have one independent refrigerant circuit.
5. Cooler shall have optional factory-installed heater, to protect cooler from ambient temperature freeze down to –20 F (–29 C) for 60 Hz applications and –15 F (–26 C) for 50 Hz applications.
6. Unit shall be provided with a factory-installed flow switch.
7. All connections shall use standard Victaulic-type fittings.
8. Cooler fluid inlet line shall have a 40 mesh strainer just ahead of the cooler.

F. Condenser:
1. Coil shall be air-cooled Novation® heat exchanger technology with microchannel (MCHX) coils and shall have a series of flat tubes containing a series of multiple, parallel flow microchannels layered between the refrigerant manifolds.
2. Coils shall consist of a two-pass arrangement. Coil construction shall consist of aluminum alloys for fins, tubes, and manifolds in combination with a corrosion-resistant coating.
3. Tubes shall be cleaned, dehydrated, and sealed.
4. Assembled condenser coils shall be leak tested and pressure tested at 656 psig (4522 kPa).

G. Refrigeration Components:

Refrigerant circuit components shall include filter drier, moisture indicating sight glass, electronic expansion device, discharge and liquid service valves (sizes 070-150 only) and complete operating charge of both refrigerant R-410A and compressor oil.

H. Controls, Safeties, and Diagnostics:
1. Unit controls shall include the following minimum components:
   a. Microprocessor with non-volatile memory. Battery backup system shall not be accepted.
   b. Separate terminal block for power and controls.
   c. Control transformer to serve all controllers, relays, and control components.
   d. ON/OFF control switch.
   e. Replaceable solid-state controllers.
   f. Pressure sensors shall be installed to measure suction and discharge pressure for each circuit. Thermistors shall be installed to measure cooler entering and leaving fluid temperatures, outdoor ambient temperature, and suction temperature. Provision for field installation of accessory sensor to measure compressor return gas temperature.
2. Unit controls shall include the following functions:
   a. Automatic circuit lead/lag for dual circuit chillers.
   b. Hermetic scroll compressors are maintenance free and protected by an auto-adaptive control that minimizes compressor wear.
   c. Capacity control based on leaving chilled fluid temperature and compensated by rate of change of return-fluid temperature with temperature set point accuracy to 0.1° F (0.06° C).
   d. Limiting the chilled fluid temperature pull-down rate at start-up to an adjustable range of 0.2° F to 2° F (0.11° C to 1.1° C) per minute to prevent excessive demand spikes at start-up.
   e. Seven-day time schedule.
   f. Leaving chilled fluid temperature reset from return fluid and outside air temperature.
   g. Chilled water pump start/stop control and primary/standby sequencing to ensure equal pump run time.
   h. Dual chiller control for parallel chiller applications without addition of hardware modules and control panels (additional thermistors and wells are required).
   i. Timed maintenance scheduling to signal maintenance activities for pumps, condenser coil cleanings, strainer maintenance and user-defined maintenance activities.
   j. Boiler enable signal to initiate system heating mode.
   k. Low ambient protection to energize cooler and hydronic system heaters.
   l. Periodic pump start to ensure pump seals are properly maintained during off-season periods.
   m. Single step demand limit control activated by remote contact closure.
   n. Nighttime sound mode to reduce the sound of the machine by a user-defined schedule.
3. Diagnostics:
   a. The control panel shall include, as standard, a scrolling marquee display capable of indicating the safety lockout condition by displaying a code for which an explanation may be scrolled at the display.
   b. Information included for display shall be:
      1) Compressor lockout.
      2) Loss of charge.
      3) Low fluid flow.
      4) Cooler freeze protection.
      5) Cooler set point.
      6) Chilled water reset parameters.
      7) Thermistor and transducer malfunction.
      8) Entering and leaving-fluid temperature.

9) Compressor suction temperature.
10) Evaporator and condenser pressure.
11) System refrigerant temperatures.
12) Chiller run hours.
13) Compressor run hours.
14) Compressor number of starts.
15) Low superheat.
16) Time of day:
    a) Display module, in conjunction with the microprocessor, must also be capable of displaying the output (results) of a service test. Service test shall verify operation of every switch, thermistor, fan, and compressor before chiller is started.
    b) Diagnostics shall include the ability to review a list of the 20 most recent alarms with clear language descriptions of the alarm event. Display of alarm codes without the ability for clear language descriptions shall be prohibited.
    c) An alarm history buffer shall allow the user to store no less than 20 alarm events with clear language descriptions, time and date stamp event entry.
    d) The chiller controller shall include multiple connection ports for communicating with the local equipment network, the Carrier Comfort Network® (CCN) system and access to chiller control functions from any point on the chiller.
    e) The control system shall allow software upgrade without the need for new hardware modules.

4. Safeties:
   a. Unit shall be equipped with thermistors and all necessary components in conjunction with the control system to provide the unit with the following protections:
      1) Loss of refrigerant charge.
      2) Reverse rotation.
      3) Low chilled fluid temperature.
      4) Thermal overload.
      5) High pressure.
      6) Electrical overload.
   b. Factory pump motors (available in 60 Hz only) shall have external overcurrent protection.

I. Operating Characteristics:
1. Unit shall be capable of starting and operating down to –20 F (–29 C) on size 010-016 units, 45 F (7 C) on size 018-030 units, and 32 F (0° C) on size 035-150 units as standard.
2. Unit shall be capable of starting and running at outdoor ambient temperatures up to 120 F (50 C) for all sizes. Unit shall additionally be able to stay online when running with a 125 F (52 C) ambient temperature.
3. Unit shall be capable of starting up with 95 F (35 C) entering fluid temperature to the cooler.

J. Fan Motors:
1. Condenser fans shall be direct-drive Aero-Acoustic™ type, discharging air vertically upward.
2. All condenser fan motors shall be totally enclosed 3-phase type with permanently lubricated ball bearings, Class F insulation and internal, automatic reset thermal overload protection or manual reset calibrated circuit breakers.
3. Shafts shall have inherent corrosion resistance.
4. Fan blades shall be statically and dynamically balanced.
5. Condenser fan openings shall be equipped with PVC coated steel wire safety guards.

K. Electrical Requirements:
1. Unit/module primary electrical power supply shall enter the unit at a single electrical box (includes option for dual point connection on sizes 070-150).
2. Unit shall operate on 3-phase power at the voltage shown in the equipment schedule.
3. Control points shall be accessed through terminal block.
4. Unit shall be shipped with factory control and power wiring installed.

L. Chilled Water Circuit:
1. Chilled water circuit shall be rated for 300 psig (2068 kPa). Units with optional pump package (60 Hz only) are rated for 150 psig (1034 kPa) working pressure.
2. Solid-state flow monitor with integral relay shall be factory installed and wired.
3. Brass body strainer with 40 mesh screen and ball type blow down.
4. Optional hydronic package (60 Hz only, applies to all unit sizes except as noted, with or without the use of a VFD [variable frequency drive]):
   a. Field pipe connections shall be carbon steel Victaulic type.
   b. Optional single or primary/stand-by operation pump systems. Dual pump systems shall have a pump discharge check valve.
   c. For dual-pump packages, the equipment shall have one pump operating, and a simple transition to the back-up pump shall be accomplished by means of a valve which shall be supplied with this configuration.
   d. For dual-pump packages, when servicing is required, the pump removal/installation process shall require neither the chiller to be drained nor the installation of a blank flange

to replace the pump being removed/ installed.

e. Pumps shall be single stage design, capable of being serviced without disturbing piping connections.
   1) Pump casing shall be of class 30 cast iron.
   2) The impeller shall be of cast bronze, closed type, dynamically balanced, keyed to the shaft and secured by locking cap screw.
   3) The hydronic kit will be provided with a flush line connection to ensure lubrication at the seal face and allow for positive venting of the seal chamber.
   4) Pump shall be rated for 150 psig (1034 kPa) working pressure.
   5) The pump case shall have gage tappings at the suction and discharge nozzles and include drain ports.
   6) Motors shall totally enclosed 3-phase type with grease lubricated ball bearings.
   7) Each pump shall be factory tested per Hydraulic Institute Standards.
   8) Pump motors shall be VFD compatible.

f. Fluid expansion tank (sizes 010-060) shall be factory installed within the chiller cabinet insulates, pre-charged and rated for a maximum working pressure of 150 psig (1034 kPa).

g. Water pressure taps (2) shall be factory installed across the cooler and rated for 150 psig (1034 kPa).

h. Balancing valve shall be factory installed to set flow gage ports shall be factory-installed and rated for 300 psig (2068 kPa).

i. Hydronic assembly shall have factory-supplied electric freeze protection to –20 F (–29 C) when optional heaters are used.

j. Piping shall be type-L seamless copper tubing.

5. With VFD (60 Hz only) (these comments are applicable in addition to the comments in section L.4 when the VFD hydronic package is employed [30RAP070-150 only]):

   a. The drive shall be of the VVC-PWM (voltage vector control - pulse with modulation) type, providing near unity displacement power factor without the need for external power factor correction capacitors at all loads and speeds.

   b. The drive and motor protection shall include; motor phase to ground fault, loss of supply phase, over voltage, under voltage, motor overtemperature, inverter overload, and overcurrent. Overcurrent is not allowed, ensuring hydronic units will not overload the motor at any point in the operating range of the unit.

   c. Sensorless control software shall be available in the hydronic unit to provide automatic speed control without the need for pump mounted (internal/external) or remotely mounted differential pressure system feedback sensors. Control mode setting and minimum/maximum head set points shall be set at the factory and be user adjustable via the programming interface.

   d. The integrated control shall incorporate an integrated graphical user interface that shall provide running and diagnostic information and identify faults and status in clear English language. Faults shall be logged and/or recorded for review at a later date. It shall be possible to upload parameters from one drive into the non-volatile memory of a computer and download the parameters into other drives requiring the same settings. The keypad shall incorporate Hand-Off-Auto pushbuttons to enable switching between BMS (Building Management System) and manual control. The drive shall incorporate a USB port for direct connection to a PC and an RS485 connection with Modbus RTU protocol. Optional protocols available should include BACnet and LonWorks.

   e. The control shall have the following additional features: Sensorless override for BMS, manual pump control or closed loop PID (proportional/integral/derivative) control; programmable skip frequencies and adjustable switching frequency for noise/vibration control; auto alarm reset; motor pre-heat function; six programmable digital inputs; two analog inputs; one programmable analog/digital output; two volt-free contacts.

   f. The hydronic unit shall be capable of operating in any of the following control modes:
      1) Duty pump and standby pumps with sensorless control.
      2) Duty pump and standby pumps with remote sensor or building automation system (BAS) control.

M. Special Features:

Certain standard features are not applicable when the features designated by * are specified. For assistance in amending the specifications, contact your Carrier representative.

1. High-efficiency variable condenser fans:

   All fans on the unit shall have variable speed fan motors to provide higher part load efficiency and reduced acoustic levels. Each fan circuit shall have a factory-installed, independent variable speed drive with display. Variable speed drives are rated IP-55 enclosures and UL Listed. The use of this option, with the addition of antifreeze in the cooler circuit and wind baffles, shall allow running with outdoor ambient

temperatures down to –20 F (–28.9 C). This option is a standard feature on sizes 011 and 016, is not available on sizes 010, 015, and 070-150, and is not available in combination with low ambient head pressure control.

* 2. Low-Ambient Operation:

Unit shall be capable of starting and operating down to –20 F (–29 C) with the addition of either the field or factory-installed solid-state low ambient head pressure control or high-efficiency variable condenser fans. In addition, adequate field-supplied antifreeze with suitable corrosion inhibitor protection shall be field-installed in the evaporator circuit. Field-installed wind baffles shall also be required. If significant low-load operation is anticipated, then hot gas bypass is recommended. Low ambient head pressure control is standard on sizes 010 and 015, and high-efficiency variable condenser fans are standard on sizes 011 and 016.

NOTE: The motors associated with low ambient head pressure control will be open type and shall have class B insulation.

3. Unit-Mounted Non-Fused Disconnect:

Unit shall be supplied with factory-installed, non-fused electrical disconnect for main power supply. For unit sizes 070 and larger, this option is available only with single-point power. Additionally, on sizes 100-150, this option is not available with 208/230 volts.

4. Optional Condenser Coil Materials:

a. E-coated microchannel coils:

E-coated aluminum microchannel coil shall have a flexible epoxy polymer coating uniformly applied to all coil external surface areas without material bridging between fins or louvers. Coating process shall ensure complete coil encapsulation, including all exposed fin edges. E-coat shall have a thickness of 0.8 to 1.2 mil with top coat having a uniform dry film thickness from 1.0 to 2.0 mil on all external coil surface areas including fin edges. E-coated coils shall have superior hardness characteristics of 2H per ASTM D3363-00 and cross hatch adhesion of 4B-5B per ASTM D3359-02. Impact resistance shall be up to 160 in./lb (ASTM D2794-93). E-coated coil shall have superior impact resistance with no cracking, chipping, or peeling per NSF/ANSI 51-2002 Method 10.2. E-coated aluminum microchannel coils shall be capable of withstanding 8,000-hour salt spray test in accordance with the ASTM (American Society for Testing and Materials) B-117 Standard.

b. Aluminum fin/copper tube coils (30RAP 070-150 only):

Coil shall be constructed of seamless copper tubes mechanically bonded to aluminum fins. Fins shall have wavy enhancements. These condenser coils are recommended with remote cooler applications. These coils are not recommended for corrosive environments.

c. Pre-coated aluminum-fin coils (30RAP 070-150 only):

Coil shall have a durable epoxy-phenolic coating to provide protection in mildly corrosive coastal environments. Coating shall be applied to the aluminum fin stock prior to the fin stamping process to create an inert barrier between the aluminum fin and copper tube. Epoxy-phenolic barrier shall minimize galvanic action between dissimilar metals.

d. Copper-fin coils (30RAP 070-150 only):

Coil shall be constructed of copper fins mechanically bonded to copper tubes and copper tube sheets. Galvanized steel tube sheets shall not be acceptable. A polymer strip shall prevent coil assembly from contacting sheet metal coil pan to minimize potential for galvanic corrosion between the coil and pan. All-copper construction shall provide protection in moderate coastal applications.

e. E-coated aluminum-fin coils (30RAP 070-150 only):

Coil shall have a flexible epoxy polymer coating uniformly applied to all coil surface areas without material bridging between fins. Coating process shall ensure complete coil encapsulation. Color shall be high gloss black with gloss — 60° of 65 to 90% per ASTM ID523-89. Uniform dry film thickness from 0.8 to 1.2 mil on all surface areas including fin edges. Superior hardness characteristics of 2H per ASTM D3363-92A and cross hatch adhesion of 4B-5B per ASTM D3359-93. Impact resistance shall be up to 160 in./lb (ASTM D2794-93). Humidity and water immersion resistance shall be up to minimum 1000 and 250 hours respectively (ASTM D2247-92 and ASTM D870-92). Corrosion durability shall be confirmed through testing to no less than 3000 hours salt spray per ASTM B117-90. Coil construction shall be aluminum fins mechanically bonded to copper tubes.

f. E-coated copper-fin coils (30RAP 070-150 only):

Coil shall have a flexible epoxy polymer coating uniformly applied to all coil surface areas without material bridging between fins. Coating process shall ensure complete coil encapsulation. Color shall be high gloss black with gloss — 60° of 65 to 90% per ASTM D523-89. Uniform dry film thickness

from 0.8 to 1.2 mil on all surface areas including fin edges. Superior hardness characteristics of 2H per ASTM D3363-92A and cross hatch adhesion of 4B-5B per ASTM D3359-93. Impact resistance shall be up to 160 in./lb (ASTM D2794-93). Humidity and water immersion resistance shall be up to minimum 1000 and 250 hours respectively (ASTM D2247-92 and ASTM D870-92). Corrosion durability shall be confirmed through testing to no less than 3000 hours salt spray per ASTM B117-90. Coil construction shall be copper-fins mechanically bonded to copper tube sheets. Galvanized steel tube sheets shall not be acceptable. A polymer strip shall prevent coil assembly from contacting sheet metal coil pan to maintain coating integrity and minimize corrosion potential between the coil and pan.

5. Remote Enhanced Display:

   Unit shall be supplied with indoor-mounted, remote, 40-character per line, 16-line display panel for field installation.

6. Chillervisor System Manager III Multi-Unit Control:

   Field-installed control shall sequence between 2 and 8 chillers in parallel in a single system.

7. Hot Gas Bypass:

   Unit shall be equipped with factory or field-installed, microprocessor-controlled, hot gas bypass that shall permit unit operation down below the minimum standard step of capacity. The factory option is not available on sizes 010-016 or on any application with a leaving fluid temperature below 35 F (2 C). Option and accessory not available on units with the digital compressor option.

8. Energy Management Module:

   A factory or field-installed module shall provide the following energy management capabilities: 4 to 20 mA signals for leaving fluid temperature reset, cooling set point or demand limit control; 2-point demand limit control (from 15% to 100%) activated by a remote contact closure; and discrete input for "Ice Done" indication for ice storage system interface.

9. Security Grilles/Hail Guards:

   Unit shall be supplied with factory or field-installed, louvered, sheet metal panels which securely fasten to the chiller and provide condenser coil protection against hail and other physical damage. This option or accessory directly covers the coil(s) on sizes 010 to 060. On sizes 070 and larger, the louvered panels are only on the ends of the chiller, with a wire guard entirely covering the sides of the chiller.

10. Vibration Isolation:

    Vibration isolation pads shall be supplied for field installation at unit mounting points. Pads shall help to reduce vibration transmission into the occupied space.

11. Chilled Water Storage Tank (Sizes 010-060 only):
    a. Fluid storage tank shall be rated for a maximum of 150 psig (1034 kPa).
    b. Shall provide a minimum 4 gallon per ton (3.7 L per kW) fluid storage capacity.
    c. Shall fit under the chiller to minimize system footprint requirements. Tanks fitted outside of chiller footprint shall not be acceptable.
    d. Tank shall be constructed a cold rolled carbon steel shell.
    e. Tank shall be insulated with $^3/_4$-in. (19 mm) closed-cell, polyvinyl-chloride foam with a maximum K factor of 0.28.
    f. Tank shall be baffled to prevent temperature stratification.
    g. Tank shall have Victaulic connections.
    h. Tank shall have vent and drain plugs accessible from outside tank enclosure.
    i. Internal heaters shall provide freeze protection to –20 F (–29 C). The included heater thermostat prevents overheating of the fluid.

12. BACnet Communication Option:

    Shall provide pre-programmed factory-installed communication capability with a BACnet MS/TP network. Allows integration with i-Vu® Open control system or a third-party BACnet building automation system. No field programming shall be required.

13. BACnet/Modbus Translator Control:

    Unit shall be supplied with field-installed interface between the chiller and a BACnet Local Area Network (LAN, i.e., MS/TP EIA-485). Field programming shall be required.

14. LON Translator control:

    Unit shall be supplied with field-installed interface between the chiller and a Local Operating Network (LON, i.e., LonWorks FT-10A ANSI/EIA-709.1). Field programming shall be required.

15. Navigator™ Hand-Held Display:
    a. Portable hand held display module with a minimum of 4 lines and 20 characters per line, of clear English, Spanish, Portuguese or French language.
    b. Display menus shall provide clear language descriptions of all menu items, operating modes, configuration points and alarm diagnostics. Reference to factory codes shall not be accepted.

c. RJ-14 connection plug shall allow display module to be connected to factory-installed receptacle.

d. Industrial grade coiled extension cord shall allow the display module to be moved around the chiller.

e. Magnets shall hold the display module to any sheet metal panel to allow hands-free operation.

f. Display module shall have NEMA 4x housing suitable for use in outdoor environments.

g. Display shall have back light and contrast adjustment for easy viewing in bright sunlight or night conditions.

h. Raised surface buttons with positive tactile response.

16. Touch Pilot™ Display:

Unit shall be supplied with a remote mount touch screen display for network attachment to the chiller.

17. GFI Convenience Outlet (60 Hz Only):

Shall be factory or field installed to provide the chiller with a 4 amp GFI receptacle. The receptacle shall have independent fuse protection. The convenience outlet is a 115-v female receptacle.

18. Freeze Protection Cooler Heaters:

Cooler heaters shall provide protection from cooler freeze-up to –20 F (–29 C) 60 Hz and –15 F (–26 C) 50 Hz.

19. Value Sound Fans:

Shall provide propeller-type fans for applications that are not highly sound-sensitive. These fans shall have Class F insulation and internal, automatic-reset thermal overload protection or manual reset calibrated circuit breakers.

20. Ultra-Low Sound:

Shall provide sound blankets around each compressor in conjunction with low-sound AeroAcoustic™ fans to provide significant chiller sound reduction.

21. High SCCR (Short Circuit Current Rating):

The optional high SCCR (short circuit current rating) device shall allow the chiller to tolerate a 65 kA (208/230, 380, 380/415, and 460-v units) or 25 kA (575-v units) short circuit current for a brief period of time while protecting the downstream components. The high SCCR option shall provide a higher level of protection than the standard unit. This is not available with dual point power at any size, or with 208/230-v units in the size range of 100-150.

22. Compressor Suction Service Valves (Sizes 070-150 only):

Shall provide a suction service valve per circuit, which is in addition to the standard discharge service valve.

23. Digital Compressor Option (Sizes 010, 015, 018-090 only):

Shall provide a factory-installed digital compressor to provide incremental steps for tighter temperature control (not available on any application with a leaving fluid temperature below 35 F [2 C]).

24. Remote Cooler Kit:

Field-installed remote cooler kit shall provide the additional hardware required to remotely mount the cooler from the unit. There are limits to total separation of the unit to the cooler as well as vertical separation limits, and these shall be delineated in the accessory installation instructions. Never bury refrigerant piping on these or any other applications.

25. Wind Baffles:

Wind baffles facilitate operation down to –20 F (–29 C) when used in conjunction with either low ambient temperature head pressure control or high-efficiency variable condenser fans.

26. Low Sound Compressor Blankets:

Accessory low sound compressor blankets shall reduce unit the sound levels by providing an acoustic blanket on each compressor.

27. Seismic Certification:

A seismic kit is available which will result in a unit SDS (seismic design acceleration parameter) level of 2.5 for 30RAP010-060 units, or a unit SDS level of 2.1 for 30RAP070-150 units.



Manufacturer reserves the right to discontinue, or change at any time, specifications or designs without notice and without incurring obligations.

Pg 108 Catalog No. 04-52300087-01 Printed in U.S.A. Form 30RAP-17PD
Replaces: 30RAP-16PD