Product Data

AquaForce® Variable Speed Chillers

140 to 500 Nominal Tons (490 to 1760 Nominal kW)

30XV140-500
Variable Speed Air-Cooled Liquid Chillers
with Greenspeed® Intelligence

© 2025 Carrier

Features/Benefits

AquaForce 30XV chillers with Greenspeed® intelligence provide best full load and part load performance in a single chassis from 140 to 500 tons[1]

AquaForce chillers were designed from the ground up to meet the efficiency demands of today and the future by providing premium air-cooled chiller packages for contractors, consulting engineers, and building owners.

Tiered performance facilitates the optimal chiller selection

To best meet customer needs, Carrier provides a tiered approach for 30XV chillers. These tiers allow for selections ranging from units that provide the smallest footprint for a given capacity while providing competitive efficiency which can fully meet ASHRAE 90.1-2016 requirements, through larger units providing best-in-class efficiency. All units are provided with high-efficiency, variable-speed rotary screw compressors with Greenspeed® intelligence, allowing the chillers to precisely match actual load conditions.

Part load efficiency is a major consideration for many applications. Most units are provided with variable speed condenser fans or optional ECM fans. The major advantage of using a fan which can run with variable speed is the resulting increase in efficiency in part load operation.

Another major advantage of using variable-speed condenser fans or optional ECM fans is the low-ambient (and high-ambient) temperature and low-sound capability associated with these devices. More details of these benefits are provided in the Application Data section as well as other locations throughout this publication.

The AquaForce® chillers with Greenspeed® intelligence deliver superior efficiency through the entire operating range to keep costs and demand charges down. And, to make performance even better, compressors may now be purchased with optional PM (permanent magnet) motors. This exceptional performance has a significant impact on energy savings and cost of ownership.

Between full and part load efficiency, footprint, unit sound, and ambient temperature considerations, the Carrier tiered approach offers a chiller to meet customer needs.

AquaForce chillers' quiet operation makes them ideal for sound-sensitive applications

Great performance is delivered in a low sound unit that will be quiet enough for any application including hospitals, schools and other sites located in residential neighborhoods. The AquaForce chiller's AeroAcoustic™ fan has a quiet design. In part load operation, such as cooler weather or nighttime duty, the fans on most units operate at lower speed. This results in even quieter operation. Sound data may be obtained from the chiller selection program, and this information has a tolerance of plus or minus 3 dB.

30XV chillers with Greenspeed intelligence

This option features high-efficiency, variable-speed screw compressors on all units along with high-efficiency, variable-speed condenser fans on most units. The combination of these features, along with fine-tuned Carrier Controller microprocessor controls, provides premium part load efficiency to facilitate reduced utility costs over the lifespan of the chiller. Additionally, the use of variable-speed technology results in lower sound levels at part load operating conditions, and this can be very beneficial for sensitive acoustic applications.

Sound optimization

To best meet customer sound and capacity requirements, chillers may be selected with a customized software feature called sound optimization.

Built in reliability

AquaForce chillers were developed under one of the most exacting qualification programs ever used for commercial chiller products. The compressors are virtually maintenance-free and protected by an auto-adaptive control that minimizes compressor wear. The use of variable-speed condenser fans allows chillers to operate year-round from –20°F (–29°C) to 125.6°F (52°C), with a combination of options and control methods. The following features are also provided to help ensure reliable performance:

Capacity Recovery™ feature reduces capacity recovery time. With the rise in data centers and critical cooling applications, focus has increased on capacity recovery times for chiller products. Capacity recovery is defined as the time it takes to reach 100% capacity after power is restored to the chiller, given that the full cooling load is present. Capacity recovery times are the critical factor to consider in data centers due to the consistently high loads in the space and the need to maintain the temperatures.

Carrier now offers the Capacity Recovery™ feature, a standard capacity control feature that can reduce the capacity recovery time to less than 4 minutes for the 30XV chiller with Greenspeed® intelligence (uninterruptible power supply [UPS] option required). Other manufacturers often discuss restart time without providing the details of how long it takes to reach full capacity, but the achievement of full capacity is critical to the end user. Capacity recovery is described in greater detail in the Application data section on page 66.

Table of contents

	Page
Features/Benefits	2
Model Number Nomenclature	6
Physical Data	8
Options and Accessories	36
Dimensions	39
Selection Procedure	42
Performance Data	44
Typical Piping and Wiring	48
Electrical Data	50
Controls	51
Control and Power Wiring Schematic	53
Application Data	57
Guide Specifications	69

1. As of the date of publication.

Standard DC link reactor is included in all drives for the fans and main compressor motors. The use of this component mitigates customer concern over electrical system harmonics, and therefore AC line reactors should not be required for applications employing 30XV chillers with Greenspeed intelligence.

Multiple independent circuits provide redundancy and greater reliability.

Electronic expansion valve (EXV) allows for precise control through all operating ranges.

Highly efficient, reliable chilled water circuit

AquaForce chillers provide a comprehensive chilled water circuit utilizing a high-efficiency shell-and-tube flooded evaporator. Units are equipped with a drainable evaporator.

Electronic thermal-dispersion flow switch is included with the evaporator. The switch is factory installed and tested and contains no moving parts for high reliability.

Environmentally balanced

R-513A is an environmentally balanced, safe and efficient refrigerant. It has a low global warming potential, zero ozone depletion potential and an A1 safety rating (low toxicity and no flame propagation). The U.S. EPA's SNAP policy has listed R-513A as an acceptable refrigerant substitute for use in positive displacement chillers as it does not present significant risk to human health or the environment.

ASHRAE 90.1 COMPLIANT

Easy installation

A single chassis design provides a one-piece unit from 140 to 500 tons. The base rail is industrial-quality cold-rolled steel for maximum structural integrity. The base rail is 7 ga with RTPF (round tube, plate fin) coils or MCHX (microchannel) coils. The zinc-dipped galvanized frame (with Magni coated screws) provides the best protection on the market for corrosion resistance. With such a structurally sound base, no perimeter base rail is needed.

Remote evaporator

A flooded, remote evaporator is available for up to 50-ft refrigerant line length by contacting application engineering. This distance can be increased per the remote evaporator recommendations by coil type.

Carrier Controller microprocessor controls for ease of use

The Carrier Controller microprocessor communicates in easy to understand English, making it as easy as possible to monitor and control each AquaForce chiller with Greenspeed intelligence while accurately maintaining fluid temperatures. Carrier Controller microprocessor controls are also available with Spanish as a standard configuration option. Carrier's 30 Series chillers' Carrier Controller microprocessor controls provide features such as chilled water temperature reset, demand limiting, compressor wear minimization and protection, temperature and pressure displays and diagnostic functions. These controls result in higher chiller reliability, simplified training and more productive service calls with correspondingly lower operational and maintenance costs.

The user interface comes with a standard 7-in. Carrier Controller microprocessor display with chiller pictorial. The Carrier Controller microprocessor display is an easy-to-use touch screen that provides simple navigation for configuration and control of AquaForce units.

The display can be used by the touch of a finger or by employing a factory-provided stylus. The Carrier Controller microprocessor display helps technicians quickly diagnose chiller issues and help prevent problems from occurring.

All AquaForce units are ready for use with Carrier Comfort Network® (CCN) devices and BACnet IP (may require additional field programming).

A BACnet™[1]/Modbus®[1] Translator control as well as a LON (local operating network) Translator control is available as either a factory-installed option or a field-installed accessory. These devices, when provided with appropriate field programming, allow interface between the network and the 30XV chiller with Greenspeed intelligence.

Novation® heat exchanger technology

The Novation heat exchanger design with microchannel (MCHX) condenser coil is a robust, cost effective alternative to traditional coil design. These coils are offered coated or uncoated to match coil protection to site conditions. The e-coated version of this coil (as well as the e-coated version of the Al/Cu coil) can withstand a 10,000-hour salt spray test in accordance with ASTM (American Society for Testing and Materials) B-117 Standard. The Carrier Electronic Catalog (E-CAT) can be used to determine whether corrosion protection is recommended for particular applications in coastal/marine environments. Following the input of the requested data, the E-CAT program output will advise the appropriate coil to be used.

Other factors described in "Selection Guide: Environmental Corrosion Protection" catalog number 04-581061-01 must also be considered to determine if corrosion protection is required.

Microchannel coils are sturdier than other coil types, making them easier to clean without causing damage to the coil.

Due to the compact all-aluminum design, microchannel coils will reduce overall unit operating weight by 6 to 7%. The streamlined MCHX coil design reduces refrigerant charge by up to 30%.

The coil is designed with rubber isolation around the powder painted coil frame to eliminate galvanic couples, which can cause corrosion due to dissimilar metals.

Free cooling capability

Due to the internal loads driven by people, computers, machinery and lighting, many HVAC applications require cooling even in colder months. Rather than always relying upon mechanical cooling to satisfy the building load, the 30XV is available with another means to meet some or all of the cooling load requirement in colder weather. This alternative approach is to use a waterside economizer, sometimes known as a free cooling system. Many facilities, such as data centers, for example, are

1. Third-party trademarks and logos are the property of their respective owners.

particularly interested in these types of systems.

The free cooling section is physically independent from the mechanical cooling section of the chiller, with the free cooling section being located at the end of the chiller which receives the system return chilled fluid. This physical independence of the free cooling and mechanical cooling sections, allowing air to flow independently in the free cooling section as well as the mechanical cooling section, results in both efficiency and servicing advantages compared to a "stacked" design (a design in which air must be drawn over mechanical cooling coils and free cooling coils whenever the chiller is operating).

The 30XV free cooling is available in many different sizes. Instead of requiring the customer to install an "all or nothing" type arrangement, the customer can determine how much free cooling they would like for each particular job. While some jobs may only desire limited amount of free cooling, others may want substantially more. With the 30XV design, the amount is completely customizable.

Remote connectivity

In an ever interconnected world, there is a need to provide communication capability to large chillers. This communication capability allows the factory and service technicians access to the machine information from a remote location, thus allowing for remote diagnostics and prognostics leading to less down time for the customer and quicker resolution to field problems. Remote Connectivity, which is a standard feature on all 30XV chillers during the standard warranty period, is a factory installed, secure cellular communications system. This remote connection communicates information such as equipment parameters, operating conditions and equipment state to a central site (Operations Center), where the data can then be injected into various systems like the existing North America Field Office (NAFO) web portal or mobile app. The service is dependent on cellular coverage and customer acceptance of communication transmission.

Seismic certification

A seismic unit modification is available which will result in a unit SDS (seismic design acceleration parameter) level of 2.0.

Features/Benefits (cont)

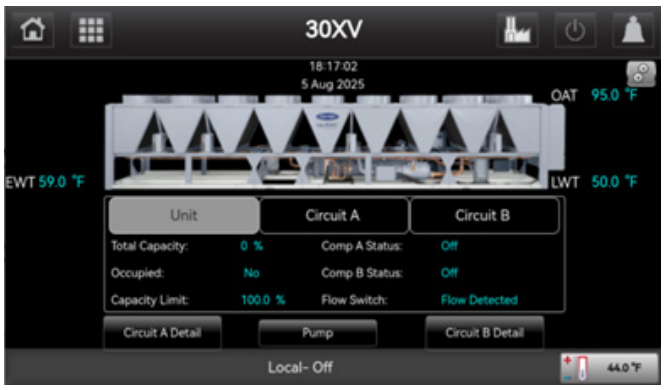

Carrier Controller Display

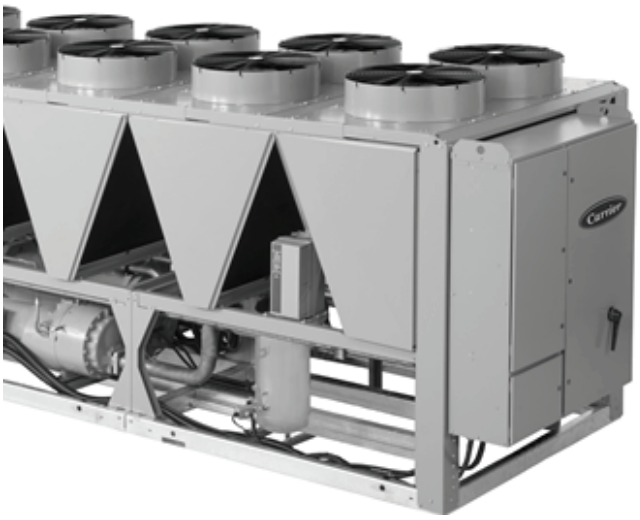

Variable Frequency Drive (VFD) Standard on All Compressors and Most Fans

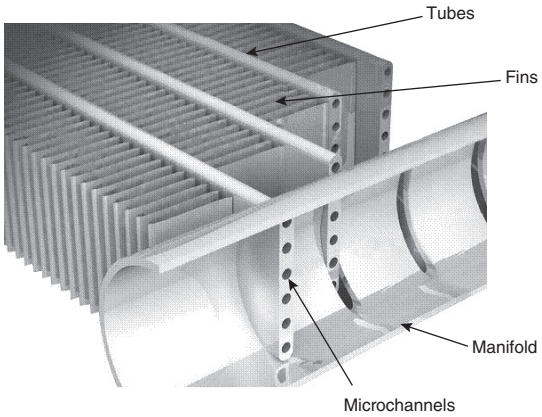

Novation® Heat Exchanger Technology with Microchannel Condenser Coils

Low-Noise Aeroacoustic™ Fan

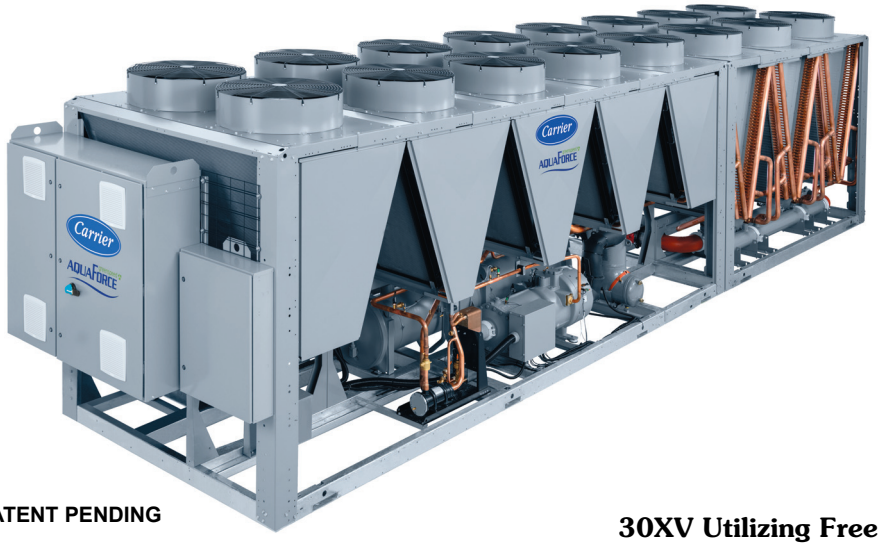

PATENT PENDING

30XV Utilizing Free Cooling

Model number nomenclature

30XV - 140 6 H L 0 - - - C 3

30XV – AquaForce® Air-Cooled Chiller

Design Series/Factory Location
- – Charlotte, NC - USA
M – Monterrey - Mexico

Nominal Capacity

140	250	400	50A/B*
160	275	40A/B*	
180	300	450	
200	325	45A/B*	
225	350	500	

Voltage
1 – 575-3-60
2 – 380-3-60
5 – 208/230-3-60
6 – 460-3-60
9 – 400-3-50
G – 400-3-60
H – 380-3-50
J – 415-3-50
K – 440-3-50

Product Tier Configuration
S – Standard Tier
M – Mid Tier
H – High Tier

Condenser and PM Motor Options
F – Al Fin/Cu Tube, R-513A Refrigerant
J – Al Fin/Cu Tube, E-Coat, R-513A Refrigerant
L – Micro Channel, R-513A Refrigerant
M – Micro Channel, E-Coat, R-513A Refrigerant
N – Al Fin/ Cu Tube, PM Compressor Motor, R-513A Refrigerant
T – Al Fin/ Cu Tube, E-Coat, PM Compressor Motor, R-513A Refrigerant
W – Micro Channel, PM Compressor Motor, R-513A Refrigerant
X – Micro Channel, E-Coat, PM Compressor Motor, R-513A Refrigerant

SEE NEXT PAGE FOR REMAINDER OF MODEL NUMBER NOMENCLATURE

Condenser Fans and Sound Options
- – Fixed Speed Condenser Fans (Std Tier) / Variable Speed Fans (Mid and High-Tier), Std Sound
0 – Variable Speed Condenser Fans (Std Tier only), Std Sound
1 – Fixed Speed Condenser Fans (Std Tier) / Variable Speed Fans (Mid and High-Tier), Low Sound Kit
2 – Variable Speed Condenser Fans (Std Tier only), Low Sound Kit
3 – Fixed Speed Condenser Fans (Std Tier) / Variable Speed Fans (Mid and High-Tier), Std Sound, Sound Optimization
4 – Variable Speed Condenser Fans (Std Tier only), Std Sound, Sound Optimization
5 – Fixed Speed Condenser Fans (Std Tier) / Variable Speed Fans (Mid and High-Tier), Low Sound Kit, Sound Optimization
6 – Variable Speed Condenser Fans (Std Tier only), Low Sound Kit, Sound Optimization
7 – Variable Speed High Static Fans, Std Sound
8 – Variable Speed High Static Fans, Low Sound Kit
C – ECM Fans, Std Sound
D – ECM Fans, Low Sound Kit
F – ECM Fans, Std Sound, Sound Optimization
G – ECM Fans, Low Sound Kit, Sound Optimization

Evaporator Options
- – Flooded Evaporator, 2 Pass, without Heater
0 – Flooded Evaporator, 2 Pass, with Heater
1 – Flooded Evaporator, 1 Pass, with Heater
2 – Flooded Evaporator, 2 Pass for Brine Application, with Heater
3 – Flooded Evaporator, 1 Pass for Process Brine Application, with Heater
B – Flooded Evaporator, 3 Pass, with Heater
C – Flooded Evaporator, 3 Pass for Brine Application, with Heater
R – Remote Evaporator, 2 Pass (requires to be processed via ETO)

* 40A, 45A, and 50A are split units that are shipped in two pieces (40A and 40B, 45A and 45B, 50A and 50B). When they arrive at the jobsite, they are combined to form the equivalent of 400, 450, or 500 size units.

Quality Assurance
ISO 9001:2015-certified processes

LEGEND
CFSP — Coil Face Shipping Protection
EMM — Energy Management Module
GFI — Ground Fault Interrupter
LON — Local Operating Network
SCCR — Short Circuit Current Rating

Model number nomenclature (cont)

30XV - 140 6 H L 0 - - - C 3

30XV – AquaForce® Air-Cooled Chiller

SEE PREVIOUS PAGE FOR REMAINDER OF MODEL NUMBER NOMENCLATURE

Valve and Insulation Options
- - – No Suction Service Valve, Actuated Discharge Valves (Flooded Evaporator) No Suction Line Insulation
- 0 – Suction Service Valve, Actuated Discharge Valves (Flooded Evaporator), No Suction Line Insulation
- 1 – No Suction Service Valve, Manual Discharge Valves (Flooded Evaporator, Middle East only), No Suction Line Insulation
- 2 – Suction Service Valve, Manual Discharge Valves (Flooded Evaporator, Middle East only), No Suction Line Insulation
- 5 – No Suction Service Valve, Actuated Discharge Valves, (Flooded Evaporator), Suction Line Insulation
- 6 – Suction Service Valve, Actuated Discharge Valves, (Flooded Evaporator), Suction Line Insulation
- 7 – No Suction Service Valve, Manual Discharge Valves, (Flooded Evaporator, Middle East only), Suction Line Insulation
- 8 – Suction Service Valve, Manual Discharge Valves, Flooded Evaporator, Middle East only), Suction Line Insulation
- W – No Suction Service Valve, Actuated Discharge Valves (Process Brine Evaporator), Suction Line Insulation
- X – Suction Service Valve, Actuated Discharge Valves (Process Brine Evaporator), Suction Line Insulation

Electrical Options
- - – Single Point Power, No Control Transformer, Std
- 0 – Single Point Power with Disconnect, No Control Transformer, Std SCCR
- 1 – Dual Point Power, No Control Transformer, Std SCCR
- 2 – Dual Point Power with Disconnect, No Control Transformer, Std SCCR
- 3 – Single Point Power, Control Transformer, Std SCCR
- 4 – Single Point Power with Disconnect, Control Transformer, Std SCCR
- 5 – Dual Point Power, Control Transformer, Std SCCR
- 6 – Dual Point Power with Disconnect, Control Transformer, Std SCCR
- 8 – Single Point Power with Disconnect, No Control Transformer, High SCCR
- 9 – Dual Point Power, No Control Transformer, High SCCR
- B – Dual Point Power with Disconnect, No Control Transformer, High SCCR
- D – Single Point Power with Disconnect, Control Transformer, High SCCR
- F – Dual Point Power, Control Transformer, High SCCR
- G – Dual Point Power with Disconnect, Control Transformer, High SCCR

Controls Options
- C – 7-in. Touch Pilot, Remote Connectivity
- D – 7-in. Touch Pilot, EMM, GFI, Remote Connectivity
- F – 7-in. Touch Pilot, BACnet (MS/TP or IP) Translator, Remote Connectivity
- G – 7-in. Touch Pilot, EMM, GFI, BACnet (MS/TP or IP) Translator, Remote Connectivity
- H – 7-in. Touch Pilot, LonWorks Translator, Remote Connectivity
- J – 7-in. Touch Pilot, EMM, GFI, LonWorks Translator, Remote Connectivity

Packaging Options
- L – Coil Face Shipping Protection (CFSP)
- 0 – CFSP, Coil Trim Panels
- 1 – CFSP, Coil Trim Panels, Security Grilles
- 2 – CFSP, Coil Trim Panels, Security Grilles, Hail Guards (End)
- 3 – Full Hail Guard
- 9 – CFSP, Coil Trim Panels, Skid + Bag
- B – CFSP, Coil Trim Panels, Security Grilles, Skid + Bag
- C – CFSP, Coil Trim Panels, Security Grilles, Hail Guards (End), Skid + Bag
- D – Full Hail Guard, Skid, Bag

Quality Assurance

ISO 9001:2015-certified processes

LEGEND
CFSP — Coil Face Shipping Protection
EMM — Energy Management Module
GFI — Ground Fault Interrupter
LON — Local Operating Network
SCCR — Short Circuit Current Rating

* 40A, 45A, and 50A are split units that are shipped in two pieces (40A and 40B, 45A and 45B, 50A and 50B). When they arrive at the jobsite, they are combined to form the equivalent of 400, 450, or 500 size units.

Physical data

30XV 140-180 — English

UNIT 30XV WITH FLOODED EVAPORATOR	140			160			180		
TIER (MODEL NO. POS. 10)	S	M	H	S	M	H	S	M	H
CHASSIS DIMENSIONS (in.) (Note 1)									
Length	207.6	207.6	254.6	207.6	254.6	301.6	207.6	254.6	301.6
Width	88.0								
Height	98.9								
SHIPPING WEIGHT (lb) (Note 2)									
Al-Cu Condenser Coil	—	11,492	12,530	11,506	12,720	13,739	11,686	12,755	13,864
MCHX Condenser Coil	10,937	10,987	11,870	10,987	12,035	12,902	11,152	12,090	12,957
OPERATING WEIGHT (lb) (Note 3)									
Al-Cu Condenser Coil	—	11,680	12,718	11,694	12,930	13,949	11,869	12,982	14,090
MCHX Condenser Coil	11,110	11,175	12,058	11,176	12,245	13,112	11,362	12,317	13,184
REFRIGERANT CHARGE VALUES (Standard Evaporator)*									
R-513A Refrigerant Charge (lb) Ckt A/ Ckt B (RTPF)	—	192/201	214/226	192/212	226/242	249/266	202/218	231/248	254/272
R-513A Refrigerant Charge (lb) Ckt A/ Ckt B (MCHX)	110/116	121/127	127/132	121/138	138/148	143/154	132/143	143/154	148/160
REFRIGERANT CHARGE VALUES (Brine Evaporator)*									
R-513A Refrigerant Charge (lb) Ckt A/ Ckt B (RTPF)	—	209/217	231/242	220/234	243/258	266/282	224/240	248/264	271/288
R-513A Refrigerant Charge (lb) Ckt A/ Ckt B (MCHX)	127/132	138/143	144/148	149/160	155/164	160/170	154/165	160/170	165/176
COMPRESSOR	Semi-Hermetic Twin Rotary Screw								
Quantity	2	2	2	2	2	2	2	2	2
Full Load Capacity Split Ckt A / Ckt B (Note 4)	50/50	50/50	50/50	50/50	50/50	50/50	50/50	50/50	50/50
Oil Charge (gal) Ckt A/Ckt B	5.5/5.5	5.5/5.5	5.5/5.5	5.5/5.5	5.5/5.5	5.5/5.5	5.5/5.5	5.5/5.5	5.5/5.5
Minimum Capacity (%) (Note 5)	<20	<20	<20	<19	<19	<19	<18	<17	<17
EVAPORATOR									
Net Fluid Volume (gal.)	21	23	23	23	25	25	25	27	27
Maximum Refrigerant Pressure (psig)	220	220	220	220	220	220	220	220	220
Maximum Water-Side Pressure (psig)	300	300	300	300	300	300	300	300	300
WATER CONNECTIONS*									
Drain (NPT, in.)	3/8	3/8	3/8	3/8	3/8	3/8	3/8	3/8	3/8
Standard (2-Pass), Inlet and Outlet, Victaulic (in.) Fresh Water/Comfort Brine	5/5	5/5	5/5	5/5	5/5	5/5	5/5	5/5	5/5
1 Pass, Inlet and Outlet, Victaulic (in.) Fresh Water/Process Brine	5/—	5/—	5/—	5/—	5/—	5/—	5/—	5/—	5/—
3 Pass, Inlet and Outlet, Victaulic (in.) Fresh Water/Comfort Brine	4/4	4/4	4/4	4/4	5/4	5/4	5/4	5/4	5/4
Std (2-Pass), Inlet and Outlet, Victaulic (in.) Fresh Water	6/6	6/6	6/6	6/6	6/6	6/6	6/6	5/5	6/6
Std (2-Pass), Inlet and Outlet, Victaulic (in.) Comfort Brine	5/5	5/5	5/5	5/5	5/5	5/5	6/6	5/5	6/6
CONDENSER FANS (Note 6)	Shrouded Axial Type, Vertical Discharge								
Maximum Fan Speed (rpm)	1140	1140	1140	1140	1140	1140	1140	1140	1140
No. Fans (Ckt A/ Ckt B)	4/4	4/4	5/5	4/4	5/5	6/6	4/4	5/5	6/6
Total Airflow (cfm) RTPF Coil	—	105,120	131,400	105,120	131,400	157,680	105,120	131,400	157,680
Total Airflow (cfm) MCHX Coil	116,000	116,000	145,000	116,000	145,000	174,000	116,000	145,000	174,000
CONDENSER COILS									
No. Coils (Ckt A/ Ckt B)	4/4	4/4	5/5	4/4	5/5	6/6	4/4	5/5	6/6

See page 16 for legend and notes.

Physical data (cont)

30XV 200-250 — English

UNIT 30XV WITH FLOODED EVAPORATOR	200			225			250		
TIER (MODEL NO. POS. 10)	S	M	H	S	M	H	S	M	H
CHASSIS DIMENSIONS (in.) (Note 1)									
Length	254.6	301.6	348.6	251.7	298.7	345.7	298.7	345.7	392.7
Width					88.0				
Height					98.9				
SHIPPING WEIGHT (lb) (Note 2)									
Al-Cu Condenser Coil	12,785	14,004	14,943	13,627	14,667	15,715	15,893	17,117	18,316
MCHX Condenser Coil	12,090	13,157	13,946	12,902	13,810	14,677	15,117	16,170	17,217
OPERATING WEIGHT (lb) (Note 3)									
Al-Cu Condenser Coil	13,012	14,260	15,200	13,910	14,965	16,013	16,191	17,514	18,712
MCHX Condenser Coil	12,317	13,413	14,202	13,185	14,108	14,975	15,415	16,566	17,614
REFRIGERANT CHARGE VALUES (Standard Evaporator)*									
R-513A Refrigerant Charge (lb) Ckt A/ Ckt B (RTPF)	231/248	254/272	277/296	298/229	327/253	350/277	282/299	316/334	339/358
R-513A Refrigerant Charge (lb) Ckt A/ Ckt B (MCHX)	143/154	148/160	154/165	193/154	203/160	209/165	176/187	192/204	198/209
REFRIGERANT CHARGE VALUES (Brine Evaporator)*									
R-513A Refrigerant Charge (lb) Ckt A/ Ckt B (RTPF)	253/270	276/294	299/318	320/246	349/275	372/299	304/321	327/345	350/369
R-513A Refrigerant Charge (lb) Ckt A/ Ckt B (MCHX)	165/176	170/182	176/187	215/171	225/182	231/187	198/209	203/215	209/220
COMPRESSOR	Semi-Hermetic Twin Rotary Screw								
Quantity	2	2	2	2	2	2	2	2	2
Full Load Capacity Split Ckt A / Ckt B (Note 4)	50/50	50/50	50/50	60/40	60/40	60/40	50/50	50/50	50/50
Oil Charge (gal) Ckt A/Ckt B	5.5/5.5	5.5/5.5	5.5/5.5	6.0/5.5	6.0/5.5	6.0/5.5	6.0/6.0	6.0/6.0	6.0/6.0
Minimum Capacity (%) (Note 5)	<16	<16	<15	<14	<14	<14	<19	<19	<19
EVAPORATOR									
Net Fluid Volume (gal.)	27	31	31	34	36	36	36	48	48
Maximum Refrigerant Pressure (psig)	220	220	220	220	220	220	220	220	220
Maximum Water-Side Pressure (psig)	300	300	300	300	300	300	300	300	300
WATER CONNECTIONS*									
Drain (NPT, in.)	3/8	3/8	3/8	3/8	3/8	3/8	3/8	3/8	3/8
Standard (2-Pass), Inlet and Outlet, Victaulic (in.) Fresh Water/Comfort Brine	5/5	6/6	6/6	6/6	6/6	6/6	6/6	8/8	8/8
1 Pass, Inlet and Outlet, Victaulic (in.) Fresh Water/Process Brine	5/—	8/6	8/—	8/—	8/—	8/—	8/—	8/8	8/—
3 Pass, Inlet and Outlet, Victaulic (in.) Fresh Water/Comfort Brine	5/5	5/5	5/5	6/6	6/6	6/6	6/6	8/6	8/6
Std (2-Pass) , Inlet and Outlet, Victaulic (in.) Fresh Water	6/6	6/6	6/6	6/6	6/6	6/6	6/6	6/6	6/6
Std (2-Pass), Inlet and Outlet, Victaulic (in.) Comfort Brine	6/6	6/6	6/6	6/6	6/6	6/6	6/6	6/6	6/6
CONDENSER FANS (Note 6)	Shrouded Axial Type, Vertical Discharge								
Maximum Fan Speed (rpm)	1140	1140	1140	1140	1140	1140	1140	1140	1140
No. Fans (Ckt A/ Ckt B)	5/5	6/6	7/7	6/4	7/5	8/6	6/6	7/7	8/8
Total Airflow (cfm) RTPF Coil	131,400	157,680	183,960	131,400	157,680	183,960	157,680	183,960	210,240
Total Airflow (cfm) MCHX Coil	145,000	174,000	203,000	145,000	174,000	203,000	174,000	203,000	232,000
CONDENSER COILS									
No. Coils (Ckt A/ Ckt B)	5/5	6/6	7/7	6/4	7/5	8/6	6/6	7/7	8/8

See page 16 for legend and notes.

Physical data (cont)

30XV 275-325 — English

UNIT 30XV WITH FLOODED EVAPORATOR	275			300			325		
TIER (MODEL NO. POS. 10)	S	M	H	S	M	H	S	M	H
CHASSIS DIMENSIONS (in.) (Note 1)									
Length	298.7	345.7	392.7	345.7	392.7	439.7	392.7	439.7	486.7
Width					88.0				
Height					98.9				
SHIPPING WEIGHT (lb) (Note 2)									
Al-Cu Condenser Coil	16,263	17,164	18,183	17,164	18,237	19,228	18,237	19,287	20,362
MCHX Condenser Coil	15,467	16,207	17,074	16,207	17,118	17,959	17,118	18,008	18,937
OPERATING WEIGHT (lb) (Note 3)									
Al-Cu Condenser Coil	16,660	17,582	18,600	17,582	18,679	19,670	18,679	19,757	20,832
MCHX Condenser Coil	15,864	16,624	17,492	16,624	17,560	18,401	17,560	18,478	19,407
REFRIGERANT CHARGE VALUES (Standard Evaporator)*									
R-513A Refrigerant Charge (lb) Ckt A/ Ckt B (RTPF)	293/310	321/340	344/364	321/340	350/369	373/394	350/369	378/400	402/418
R-513A Refrigerant Charge (lb) Ckt A/ Ckt B (MCHX)	187/198	198/209	203/215	198/209	209/220	214/226	209/220	220/231	226/231
REFRIGERANT CHARGE VALUES (Brine Evaporator)*									
R-513A Refrigerant Charge (lb) Ckt A/ Ckt B (RTPF)	304/321	332/351	355/375	343/362	372/391	395/416	372/391	400/422	424/440
R-513A Refrigerant Charge (lb) Ckt A/ Ckt B (MCHX)	198/209	209/220	214/226	220/231	231/242	236/248	231/242	242/253	248/253
COMPRESSOR	Semi-Hermetic Twin Rotary Screw								
Quantity	2	2	2	2	2	2	2	2	2
Full Load Capacity Split Ckt A / Ckt B (Note 4)	50/50	50/50	50/50	50/50	50/50	50/50	50/50	50/50	50/50
Oil Charge (gal), Ckt A / Ckt B	6.0/6.0	6.0/6.0	6.0/6.0	6.0/6.0	6.0/6.0	6.0/6.0	6.0/6.0	6.0/6.0	6.0/6.0
Minimum Capacity (%) (Note 5)	<18	<18	<18	<17	<17	<17	<16	<16	<16
EVAPORATOR									
Net Fluid Volume (gal.)	48	50	50	50	53	53	53	56	56
Maximum Refrigerant Pressure (psig)	220	220	220	220	220	220	220	220	220
Maximum Water-Side Pressure (psig)	300	300	300	300	300	300	300	300	300
WATER CONNECTIONS*									
Drain (NPT, in.)	3/8	3/8	3/8	3/8	3/8	3/8	3/8	3/8	3/8
Standard (2-Pass), Inlet and Outlet, Victaulic (in.) Fresh Water/Comfort Brine	8/8	8/8	8/8	8/8	8/8	8/8	8/8	8/8	8/8
1 Pass, Inlet and Outlet, Victaulic (in.) Fresh Water/Process Brine	8/—	8/—	8/—	8/—	8/8	8/—	8/—	8/—	8/—
3 Pass, Inlet and Outlet, Victaulic (in.) Fresh Water/Comfort Brine	8/8	8/8	8/8	6/6	6/6	6/6	6/6	8/6	8/6
Std (2-Pass), Inlet and Outlet, Victaulic (in.) Fresh Water	6/6	6/6	6/6	6/6	6/6	6/6	6/6	6/6	6/6
Std (2-Pass), Inlet and Outlet, Victaulic (in.) Comfort Brine	6/6	6/6	6/6	6/6	6/6	6/6	6/6	6/6	6/6
CONDENSER FANS (Note 6)	Shrouded Axial Type, Vertical Discharge								
Maximum Fan Speed (rpm)	1140	1140	1140	1140	1140	1140	1140	1140	1140
No. Fans (Ckt A / Ckt B)	6/6	7/7	8/8	7/7	8/8	9/9	8/8	9/9	10/10
Total Maximum Airflow (cfm) RTPF Coil	157,680	183,960	210,240	183,960	210,240	236,520	210,240	236,520	262,800
Total Maximum Airflow (cfm) MCHX Coil	174,000	203,000	232,000	203,000	232,000	261,000	232,000	261,000	290,000
CONDENSER COILS									
No. Coils (Ckt A / Ckt B)	6/6	7/7	8/8	7/7	8/8	9/9	8/8	9/9	10/10

See page 16 for legend and notes.

Physical data (cont)

30XV 350-500 — English

UNIT 30XV WITH FLOODED EVAPORATOR	350			400			450			500	
TIER (MODEL NO. POS. 10)	S	M	H	S	M	H	S	M	H	S	M
CHASSIS DIMENSIONS (in.) (Note 1)											
Length	405.7	452.7	499.7	452.7	499.7	546.6	499.7	546.6	593.7	546.6	593.7
Width						88.0					
Height						98.9					
SHIPPING WEIGHT (lb) (Note 2)											
Al-Cu Condenser Coil	21,232	23,034	23,963	24,463	25,567	26,496	25,567	27,241	28,315	27,241	28,510
MCHX Condenser Coil	20,158	21,779	22,557	23,213	24,156	24,935	24,156	25,660	26,525	25,660	26,600
OPERATING WEIGHT (lb) (Note 3)											
Al-Cu Condenser Coil	21,746	23,580	24,510	25,010	26,140	27,069	26,140	27,938	29,012	27,938	29,247
MCHX Condenser Coil	20,672	22,326	23,104	23,760	24,729	25,507	24,729	26,356	27,221	26,356	27,337
REFRIGERANT CHARGE VALUES (Standard Evaporator)*											
R-513A Refrigerant Charge (lb) Ckt A/ Ckt B (RTPF)	434/345	479/397	502/421	450/450	478/490	501/514	479/478	518/530	541/555	518/518	569/582
R-513A Refrigerant Charge (lb) Ckt A/ Ckt B (MCHX)	275/215	303/247	308/253	292/291	303/302	308/308	303/302	325/324	330/330	325/324	358/357
REFRIGERANT CHARGE VALUES (Brine Evaporator)*											
R-513A Refrigerant Charge (lb) Ckt A/ Ckt B (RTPF)	456/389	479/414	502/438	461/461	484/495	507/519	501/500	524/535	547/560	540/540	575/587
R-513A Refrigerant Charge (lb) Ckt A/ Ckt B (MCHX)	297/259	303/264	308/270	303/302	309/307	314/313	325/324	331/329	336/335	347/346	364/362
COMPRESSOR	Semi-Hermetic Twin Rotary Screw										
Quantity	2	2	2	2	2	2	2	2	2	2	2
Full Load Capacity Split Ckt A / Ckt B (Note 4)	60/40	60/40	60/40	50/50	50/50	50/50	50/50	50/50	50/50	50/50	50/50
Oil Charge (gal), Ckt A / Ckt B	7.5/6.0	7.5/6.0	7.5/6.0	7.5/7.5	7.5/7.5	7.5/7.5	7.5/7.5	7.5/7.5	7.5/7.5	7.5/7.5	7.5/7.5
Minimum Capacity (%) (Note 5)	<15	<14	<14	<20	<20	<20	<18	<18	<18	<17	<16
EVAPORATOR											
Net Fluid Volume (gal.)	62	66	66	66	69	69	69	83	83	83	88
Maximum Refrigerant Pressure (psig)	220	220	220	220	220	220	220	220	220	220	220
Maximum Water-Side Pressure (psig)	300	300	300	300	300	300	300	300	300	300	300
WATER CONNECTIONS*											
Drain (NPT, in.)	3/8	3/8	3/8	3/8	3/8	3/8	3/8	3/8	3/8	3/8	3/8
Standard (2-pass), Inlet and Outlet, Victaulic (in.) Fresh Water/Comfort Brine	8/8	8/8	8/8	8/8	8/8	8/8	8/8	8/8	8/8	8/8	8/8
1 Pass, Inlet and Outlet, Victaulic (in.) Fresh Water/Process Brine	8/—	8/—	8/—	8/—	8/8	8/—	8/—	8/—	8/—	8/—	8/8
3 Pass, Inlet and Outlet, Victaulic (in.) Fresh Water/Comfort Brine	8/6	6/6	6/6	6/8	6/8	6/8	6/6	6/6	6/6	6/6	6/6
CONDENSER FANS (Note 6)	Shrouded Axial Type, Vertical Discharge										
Maximum Fan Speed (rpm)	1140	1140	1140	1140	1140	1140	1140	1140	1140	1140	1140
No. Fans (Ckt A / Ckt B)	9/7	10/8	11/9	9/9	10/10	11/11	10/10	11/11	12/12	11/11	12/12
Total Maximum Airflow (cfm) RTPF Coil	210,240	236,520	262,800	236,520	262,800	289,080	262,800	289,080	315,360	289,080	315,360
Total Maximum Airflow (cfm) MCHX Coil	232,000	261,000	290,000	261,000	290,000	319,000	290,000	319,000	348,000	319,000	348,000
CONDENSER COILS											
No. Coils (Ckt A / Ckt B)	9/7	10/8	11/9	9/9	10/10	11/11	10/10	11/11	12/12	11/11	12/12

See page 16 for legend and notes.

Physical data (cont)

30XV 140-180 — SI

UNIT 30XV WITH FLOODED EVAPORATOR	140			160			180		
TIER (MODEL NO. POS. 10)	S	M	H	S	M	H	S	M	H
CHASSIS DIMENSIONS (mm) (Note 1)									
Length	5273	5273	6467	5273	6467	7661	5273	6467	7661
Width					2236				
Height					2513				
SHIPPING WEIGHT (kg) (Note 2)									
Al-Cu Condenser Coil	—	5213	5684	5219	5770	6232	5301	5786	6288
MCHX Condenser Coil	4961	4984	5384	4984	5459	5852	5058	5484	5877
OPERATING WEIGHT (kg) (Note 3)									
Al-Cu Condenser Coil	—	5298	5769	5304	5865	6327	5396	5889	6391
MCHX Condenser Coil	5039	5069	5469	5069	5554	5948	5154	5587	5980
REFRIGERANT CHARGE VALUES (Standard Evaporator)*									
R-513A Refrigerant Charge (kg) Ckt A/ Ckt B (RTPF)	—	87/91	97/103	87/96	103/110	113/121	92/99	105/112	115/123
R-513A Refrigerant Charge (kg) Ckt A/ Ckt B (MCHX)	50/53	55/58	58/60	55/63	63/67	65/70	60/65	65/70	67/73
REFRIGERANT CHARGE VALUES (Brine Evaporator)*									
R-513A Refrigerant Charge (kg) Ckt A/ Ckt B (RTPF)	—	95/98	105/110	100/106	110/117	121/128	102/109	112/120	123/131
R-513A Refrigerant Charge (kg) Ckt A/ Ckt B (MCHX)	58/60	63/65	65/67	68/73	70/74	73/77	70/75	73/77	75/80
COMPRESSOR	Semi-Hermetic Twin Rotary Screw								
Quantity	2	2	2	2	2	2	2	2	2
Full Load Capacity Split Ckt A / Ckt B (Note 4)	50/50	50/50	50/50	50/50	50/50	50/50	50/50	50/50	50/50
Oil Charge (L), Ckt A / Ckt B	20.8/20.8	20.8/20.8	20.8/20.8	20.8/20.8	20.8/20.8	20.8/20.8	20.8/20.8	20.8/20.8	20.8/20.8
Minimum Capacity (%) (Note 5)	<20	<20	<20	<19	<19	<19	<18	<17	<17
EVAPORATOR									
Net Fluid Volume (L)	78	85	85	85	95	95	95	103	103
Maximum Refrigerant Pressure (kPa)	1517	1517	1517	1517	1517	1517	1517	1517	1517
Maximum Water-Side Pressure (kPa)	2068	2068	2068	2068	2068	2068	2068	2068	2068
WATER CONNECTIONS*									
Drain (NPT, in.)	3/8	3/8	3/8	3/8	3/8	3/8	3/8	3/8	3/8
Standard (2-Pass), Inlet and Outlet, Victaulic (in.) Fresh Water/Comfort Brine	5/5	5/5	5/5	5/5	5/5	5/5	5/5	5/5	5/5
1 Pass, Inlet and Outlet, Victaulic (in.) Fresh Water/ Process Brine	5/—	5/—	5/—	5/—	5/6	5/—	5/—	5/—	5/—
3 Pass, Inlet and Outlet, Victaulic (in.) Fresh Water/ Comfort Brine	4/4	4/4	4/4	4/4	5/4	5/4	5/4	5/4	5/4
Std (2-Pass), Inlet and Outlet, Victaulic (in.) Fresh Water	6/6	6/6	6/6	6/6	6/6	6/6	6/6	5/5	6/6
Std (2-Pass), Inlet and Outlet, Victaulic (in.) Comfort Brine	5/5	5/5	5/5	5/5	5/5	5/5	6/6	5/5	6/6
CONDENSER FANS (Note 6)	Shrouded Axial Type, Vertical Discharge								
Maximum Fan Speed (r/s)	19	19	19	19	19	19	19	19	19
No. Fans (Ckt A/ Ckt B)	4/4	4/4	5/5	4/4	5/5	6/6	4/4	5/5	6/6
Total Airflow (L/s) RTPF Coil	—	49 406	61 758	49 406	61 758	74 110	49 406	61 758	74 110
Total Airflow (L/s) MCHX Coil	54 520	54 520	68 150	54 520	68 150	81 780	54 520	68 150	81 780
CONDENSER COILS									
No. Coils (Ckt A/ Ckt B)	4/4	4/4	5/5	4/4	5/5	6/6	4/4	5/5	6/6

See page 16 for legend and notes.

Physical data (cont)

30XV 200-250 — SI

UNIT 30XV WITH FLOODED EVAPORATOR	200			225			250		
TIER (MODEL NO. POS. 10)	S	M	H	S	M	H	S	M	H
CHASSIS DIMENSIONS (mm) (Note 1)									
Length	6467	7661	8855	6392	7586	8780	7586	8780	9974
Width					2236				
Height					2513				
SHIPPING WEIGHT (kg) (Note 2)									
Al-Cu Condenser Coil	5799	6352	6778	6181	6653	7128	7209	7764	8308
MCHX Condenser Coil	5484	5968	6326	5852	6264	6657	6857	7334	7810
OPERATING WEIGHT (kg) (Note 3)									
Al-Cu Condenser Coil	5902	6468	6894	6310	6788	7263	7344	7944	8488
MCHX Condenser Coil	5587	6084	6442	5981	6399	6793	6992	7514	7989
REFRIGERANT CHARGE VALUES (Standard Evaporator)*									
R-513A Refrigerant Charge (kg) Ckt A/ Ckt B (RTPF)	105/112	115/123	126/134	135/104	148/115	159/126	128/136	143/152	154/162
R-513A Refrigerant Charge (kg) Ckt A/ Ckt B (MCHX)	65/70	67/73	70/75	88/70	92/73	95/75	80/85	87/93	90/95
REFRIGERANT CHARGE VALUES (Brine Evaporator)*									
R-513A Refrigerant Charge (kg) Ckt A/ Ckt B (RTPF)	115/122	125/133	136/144	145/112	158/125	169/136	138/146	148/156	159/167
R-513A Refrigerant Charge (kg) Ckt A/ Ckt B (MCHX)	75/80	77/83	80/85	98/78	102/83	105/85	90/95	92/98	95/100
COMPRESSOR	Semi-Hermetic Twin Rotary Screw								
Quantity	2	2	2	2	2	2	2	2	2
Full Load Capacity Split Ckt A / Ckt B (Note 4)	50/50	50/50	50/50	60/40	60/40	60/40	50/50	50/50	50/50
Oil Charge (L) Ckt A / Ckt B	20.8/20.8	20.8/20.8	20.8/20.8	22.7/20.8	22.7/20.8	22.7/20.8	22.7/22.7	22.7/22.7	22.7/22.7
Minimum Capacity (%) (Note 5)	<16	<16	<15	<14	<14	<14	<19	<19	<19
EVAPORATOR									
Net Fluid Volume (L)	103	116	116	128	135	135	135	180	180
Maximum Refrigerant Pressure (kPa)	1517	1517	1517	1517	1517	1517	1517	1517	1517
Maximum Water-Side Pressure (kPa)	2068	2068	2068	2068	2068	2068	2068	2068	2068
WATER CONNECTIONS*									
Drain (NPT, in.)	3/8	3/8	3/8	3/8	3/8	3/8	3/8	3/8	3/8
Standard (2-pass), Inlet and Outlet, Victaulic (in.) Fresh Water/Comfort Brine	5/5	6/6	6/6	6/6	6/6	6/6	6/6	8/8	8/8
1 Pass, Inlet and Outlet, Victaulic (in.) Fresh Water/ Process Brine	5/—	8/6	8/—	8/—	8/—	8/—	8/—	8/8	8/—
3 Pass, Inlet and Outlet, Victaulic (in.) Fresh Water/ Comfort Brine	5/5	5/5	5/5	6/6	6/6	6/6	6/6	8/6	8/6
Std (2-Pass), Inlet and Outlet, Victaulic (in.) Fresh Water	6/6	6/6	6/6	6/6	6/6	6/6	6/6	6/6	6/6
Std (2-Pass), Inlet and Outlet, Victaulic (in.) Comfort Brine	6/6	6/6	6/6	6/6	6/6	6/6	6/6	6/6	6/6
CONDENSER FANS (Note 6)	Shrouded Axial Type, Vertical Discharge								
Maximum Fan Speed (r/s)	19	19	19	19	19	19	19	19	19
No. Fans (Ckt A/ Ckt B)	5/5	6/6	7/7	6/4	7/5	8/6	6/6	7/7	8/8
Total Airflow (L/s) RTPF Coil	61 758	74 110	86 461	61 758	74 110	86 461	74 110	86 461	98 813
Total Airflow (L/s) MCHX Coil	68 150	81 780	95 410	68 150	81 780	95 410	81 780	95 410	109 040
CONDENSER COILS									
No. Coils (Ckt A/ Ckt B)	5/5	6/6	7/7	6/4	7/5	8/6	6/6	7/7	8/8

See page 16 for legend and notes.

Physical data (cont)

30XV 275-325 — SI

UNIT 30XV WITH FLOODED EVAPORATOR	275			300			325		
TIER (MODEL NO. POS. 10)	S	M	H	S	M	H	S	M	H
CHASSIS DIMENSIONS (mm) (Note 1)									
Length	7586	8780	9974	8780	9974	11,168	9974	11,168	12,362
Width					2236				
Height					2513				
SHIPPING WEIGHT (kg) (Note 2)									
Al-Cu Condenser Coil	7377	7786	8248	7786	8272	8722	8272	8749	9236
MCHX Condenser Coil	7016	7351	7745	7351	7765	8146	7765	8168	8590
OPERATING WEIGHT (kg) (Note 3)									
Al-Cu Condenser Coil	7557	7975	8437	7975	8473	8922	8473	8962	9449
MCHX Condenser Coil	7196	7541	7934	7541	7965	8346	7965	8381	8803
REFRIGERANT CHARGE VALUES (Standard Evaporator)*									
R-513A Refrigerant Charge (kg) Ckt A/ Ckt B (RTPF)	133/141	146/154	156/165	146/154	159/167	169/179	159/167	171/181	182/190
R-513A Refrigerant Charge (kg) Ckt A/ Ckt B (MCHX)	85/90	90/95	92/98	90/95	95/100	97/103	95/100	100/105	103/105
REFRIGERANT CHARGE VALUES (Brine Evaporator)*									
R-513A Refrigerant Charge (kg) Ckt A/ Ckt B (RTPF)	138/146	151/159	161/170	156/164	169/177	179/189	169/177	181/191	192/200
R-513A Refrigerant Charge (kg) Ckt A/ Ckt B (MCHX)	90/95	95/100	97/103	100/105	105/110	107/112	105/110	110/115	112/115
COMPRESSOR	Semi-Hermetic Twin Rotary Screw								
Quantity	2	2	2	2	2	2	2	2	2
Full Load Capacity Split Ckt A / Ckt B (Note 4)	50/50	50/50	50/50	50/50	50/50	50/50	50/50	50/50	50/50
Oil Charge (Liters), Ckt A / Ckt B	22.7/22.7	22.7/22.7	22.7/22.7	22.7/22.7	22.7/22.7	22.7/22.7	22.7/22.7	22.7/22.7	22.7/22.7
Minimum Capacity (%) (Note 5)	<18	<18	<18	<17	<17	<17	<16	<16	<16
EVAPORATOR									
Net Fluid Volume (L)	180	189	189	189	201	201	201	213	213
Maximum Refrigerant Pressure (kPa)	1517	1517	1517	1517	1517	1517	1517	1517	1517
Maximum Water-Side Pressure (kPa)	2068	2068	2068	2068	2068	2068	2068	2068	2068
WATER CONNECTIONS*									
Drain (NPT, in.)	3/8	3/8	3/8	3/8	3/8	3/8	3/8	3/8	3/8
Standard (2-pass), Inlet and Outlet, Victaulic (in.) Fresh Water/Comfort Brine	8/8	8/8	8/8	8/8	8/8	8/8	8/8	8/8	8/8
1 Pass, Inlet and Outlet, Victaulic (in.) Fresh Water/ Process Brine	8/—	8/—	8/—	8/—	8/8	8/—	8/—	8/—	8/—
3 Pass, Inlet and Outlet, Victaulic (in.) Fresh Water/ Comfort Brine	8/8	8/8	8/8	6/6	6/6	6/6	6/6	8/6	8/6
Std (2-Pass), Inlet and Outlet, Victaulic (in.) Fresh Water	6/6	6/6	6/6	6/6	6/6	6/6	6/6	6/6	6/6
Std (2-Pass), Inlet and Outlet, Victaulic (in.) Comfort Brine	6/6	6/6	6/6	6/6	6/6	6/6	6/6	6/6	6/6
CONDENSER FANS (Note 6)	Shrouded Axial Type, Vertical Discharge								
Maximum Fan Speed (r/s)	19	19	19	19	19	19	19	19	19
No. Fans (Ckt A / Ckt B)	6/6	7/7	8/8	7/7	8/8	9/9	8/8	9/9	10/10
Total Airflow (L/s) RTPF COIL	74 110	86 461	98 813	86 461	98 813	111 164	98 813	111 164	123 516
Total Airflow (L/s) MCHX COIL	81 780	95 410	109 040	95 410	109 040	122 670	109 040	122 670	136 300
CONDENSER COILS									
No. Coils (Ckt A / Ckt B)	6/6	7/7	8/8	7/7	8/8	9/9	8/8	9/9	10/10

See page 16 for legend and notes.

Physical data (cont)

30XV 350-500 — SI

UNIT 30XV WITH FLOODED EVAPORATOR	350			400			450			500	
TIER (MODEL NO. POS. 10)	S	M	H	S	M	H	S	M	H	S	M
CHASSIS DIMENSIONS (mm) (Note 1)											
Length	10 304	11 498	12 692	11 498	12 692	13 883	12 692	13 883	15 080	13 883	15 080
Width	2236										
Height	2513										
SHIPPING WEIGHT (kg) (Note 2)											
Al-Cu Condenser Coil	9631	10 448	10 869	11 096	11 597	12 019	11 597	12 357	12 844	12 357	12 932
MCHX Condenser Coil	9144	9879	10 232	10 529	10 957	11 310	10 957	11 639	12 032	11 639	12 066
OPERATING WEIGHT (kg) (Note 3)											
Al-Cu Condenser Coil	9864	10696	11117	11344	11857	12278	11857	12672	13159	12672	13266
MCHX Condenser Coil	9377	10127	10480	10777	11217	11570	11217	11955	12347	11955	12400
REFRIGERANT CHARGE VALUES (Standard Evaporator)*											
R-513A Refrigerant Charge (kg) Ckt A/ Ckt B (RTPF)	197/156	217/180	228/191	204/204	217/222	227/233	217/217	235/240	245/252	235/235	258/264
R-513A Refrigerant Charge (kg) Ckt A/ Ckt B (MCHX)	125/98	137/112	140/115	132/132	137/137	140/140	137/137	147/147	150/150	147/147	162/162
REFRIGERANT CHARGE VALUES (Brine Evaporator)*											
R-513A Refrigerant Charge (kg) Ckt A/ Ckt B (RTPF)	207/176	217/188	228/199	209/209	220/225	230/235	227/227	238/243	248/254	245/245	261/266
R-513A Refrigerant Charge (kg) Ckt A/ Ckt B (MCHX)	135/117	137/120	140/122	137/137	140/139	142/142	147/147	150/149	152/152	157/157	165/164
COMPRESSOR	Semi-Hermetic Twin Rotary Screw										
Quantity	2	2	2	2	2	2	2	2	2	2	2
Full Load Capacity Split Ckt A / Ckt B (Note 4)	60/40	60/40	60/40	50/50	50/50	50/50	50/50	50/50	50/50	50/50	50/50
Oil Charge (L), Ckt A / Ckt B	28.4/22.7	28.4/22.7	28.4/22.7	28.4/28.4	28.4/28.4	28.4/28.4	28.4/28.4	28.4/28.4	28.4/28.4	28.4/28.4	28.4/28.4
Minimum Capacity (%) (Note 5)	<15	<14	<14	<20	<20	<20	<18	<18	<18	<17	<16
EVAPORATOR											
Net Fluid Volume (L)	233	248	248	248	260	260	260	316	316	316	334
Maximum Refrigerant Pressure (kPa)	1517	1517	1517	1517	1517	1517	1517	1517	1517	1517	1517
Maximum Water-Side Pressure (kPa)	2068	2068	2068	2068	2068	2068	2068	2068	2068	2068	2068
WATER CONNECTIONS*											
Drain (NPT, in.)	3/8	3/8	3/8	3/8	3/8	3/8	3/8	3/8	3/8	3/8	3/8
Standard (2-pass), Inlet and Outlet, Victaulic (in.) Fresh Water/Comfort Brine	8/8	8/8	8/8	8/8	8/8	8/8	8/8	8/8	8/8	8/8	8/8
1 Pass, Inlet and Outlet, Victaulic (in.) Fresh Water/Process Brine	8/—	8/—	8/—	8/—	8/8	8/—	8/—	8/—	8/—	8/—	8/8
3 Pass, Inlet and Outlet, Victaulic (in.) Fresh Water/Comfort Brine	8/6	6/6	6/6	6/8	6/8	6/8	6/6	6/6	6/6	6/6	6/6
CONDENSER FANS (Note 6)	Shrouded Axial Type, Vertical Discharge										
Maximum Fan Speed (r/s)	19	19	19	19	19	19	19	19	19	19	19
No. Fans (Ckt A / Ckt B)	9/7	10/8	11/9	9/9	10/10	11/11	10/10	11/11	12/12	11/11	12/12
Total Airflow (L/s) RTPF COIL	98 813	111 164	123 516	111 164	123 516	135 868	123 516	135 868	148 219	135 868	148 219
Total Airflow (L/s) MCHX COIL	109 040	122 670	136 300	122 670	136 300	149 930	136 300	149 930	163 560	149 930	163 560
CONDENSER COILS											
No. Coils (Ckt A / Ckt B)	9/7	10/8	11/9	9/9	10/10	11/11	10/10	11/11	12/12	11/11	12/12

See page 16 for legend and notes.

Legend and Notes for Pages 8-15

LEGEND

Cu — Copper
Al — Aluminum
EXV — Electronic Expansion Valve
MCHX — Microchannel Heat Exchanger
RTPF — Round Tube/Plate Fin

* The process brine evaporator information is not presented here. Refer to the chiller selection program for information.

NOTES:

1. More precise dimensions are available on the certified prints.
2. Unit shipping weight includes the base unit (with standard, 2-pass evaporator) plus coil trim panels, but no other options or accessories are included. The shipping weight is equal to the operating weight (indicated above) minus the weight of the water in the evaporator.
3. Unit operating weight includes the base unit (with standard, 2-pass evaporator) plus coil trim panels, but no other options or accessories are included. Selected options and accessories will slightly alter the unit weight. See pages 19-26 for the mounting weight detail.
4. The capacity split is indicative of both compressors operating at a full load condition. The actual capacity split at most operating conditions will not match these values.
5. The minimum capacity is less than the value for units sized at full capacity. Please use the chiller selection program to determine actual minimum capacity values.
6. Standard-tier models without the variable speed condenser fan option have a maximum speed of 840 rpm (14 r/s).

Physical data (cont)

30XV 2-Piece Shipment Modules*, Standard Evaporator — English

UNIT 30XV MODEL SIZE	40A		45A				50A			
MODULE	A	B	A		B		A		B	
TIER (MODEL NO. POS. 10)	H	H	M	H	M	H	S	M	S	M
UNIT SIZE INDICATED ON MODULE NAMEPLATE	40A	40B	45A	45A	45B	45B	50A	50A	50B	50B
SHIPPING WEIGHT (lb) (See Note)										
Al-Cu Condenser Coil	24,433	2,064	25,178	25,266	2,064	3,049	25,178	25,461	2,064	3,049
MCHX Condenser Coil	23,132	1,803	23,857	23,897	1,803	2,628	23,857	23,972	1,803	2,628
REFRIGERANT CHARGE)										
R-513A Refrigerant Charge (lb) Ckt A/ CKT B (RTPF)	502/424	–/89	518/441	541/420	–/89	–/134	518/429	568/448	–/89	–/134
R-513A Refrigerant Charge (lb) Ckt A/ CKT B (MCHX)	308/294	–/14	325/310	330/308	–/14	–/22	325/310	357/336	–/14	–/22

30XV 2-Piece Shipment Modules*, Brine Evaporator — English

UNIT 30XV MODEL SIZE	40A		45A				50A			
MODULE	A	B	A		B		A		B	
TIER (MODEL NO. POS. 10)	H	H	M	H	M	H	S	M	S	M
UNIT SIZE INDICATED ON MODULE NAMEPLATE	40A	40B	45A	45A	45B	45B	50A	50A	50B	50B
SHIPPING WEIGHT (lb) (See Note)										
Al-Cu Condenser Coil	24,433	2,064	25,178	25,266	2,064	3,049	2,5178	25,461	2,064	3,049
MCHX Condenser Coil	23,132	1,803	23,857	23,897	1,803	2,628	2,3857	23,972	1,803	2,628
REFRIGERANT CHARGE)										
R-513A Refrigerant Charge (lb) Ckt A/ CKT B (RTPF)	508/429	–/89	524/446	547/425	–/89	–/134	540/451	574/453	–/89	–/134
R-513A Refrigerant Charge (lb) Ckt A/ CKT B (MCHX)	314/299	–/14	331/315	336/313	–/14	–/22	347/332	363/341	–/14	–/22

30XV 2-Piece Shipment Modules*, Process Brine Evaporator — English

UNIT 30XV MODEL SIZE	50A	
MODULE	A	B
TIER (MODEL NO. POS. 10)	M	M
UNIT SIZE INDICATED ON MODULE NAMEPLATE	50A	50B
SHIPPING WEIGHT (lb) (See Note)		
Al-Cu Condenser Coil	25,461	3,049
MCHX Condenser Coil	23,972	2,628
REFRIGERANT CHARGE)		
R-513A Refrigerant Charge (lb) Ckt A/ CKT B (RTPF)	589/547	–/134
R-513A Refrigerant Charge (lb) Ckt A/ CKT B (MCHX)	378/435	–/22

LEGEND

Cu — Copper
Al — Aluminum
MCHX — Microchannel Heat Exchanger
RTPF — Round Tube/Plate Fin

*Two-piece shipment modules are combined at the job site. The resulting unit is roughly equivalent to standard size units. That is, 40A units combine the A and B modules to become a 30XV-400 unit. 45A units combine the two modules to become a 30XV-450 unit, and 50A units combine the two modules to become a 30XV-500 unit. Consult the appropriate Physical Data tables for remaining physical data for the combined units.

NOTE: Unit shipping weight includes the base unit plus coil trim panels, but no other options or accessories are included.

Physical data (cont)

30XV 2-Piece Shipment Modules*, Standard Evaporator — SI

UNIT 30XV MODEL SIZE	40A		45A				50A			
MODULE	A	B	A		B		A		B	
TIER (MODEL NO. POS. 10)	H	H	M	H	M	H	S	M	S	M
UNIT SIZE INDICATED ON MODULE NAMEPLATE	40A	40B	45A	45A	45B	45B	50A	50A	50B	50B
SHIPPING WEIGHT (kg) (See Note)										
Al-Cu Condenser Coil	11083	936	11421	11461	936	1383	11421	11549	936	1383
MCHX Condenser Coil	10493	818	10821	10840	818	1192	10821	10874	818	1192
REFRIGERANT CHARGE)										
R-513A Refrigerant Charge (kg) Ckt A/ CKT B (RTPF)	228/192	–/40	235/200	245/191	–/40	–/61	235/195	258/203	–/40	–/61
R-513A Refrigerant Charge (kg) Ckt A/ CKT B (MCHX)	140/133	–/6	147/141	150/140	–/6	–/10	147/141	162/152	–/6	–/10

30XV 2-Piece Shipment Modules*, Brine Evaporator — SI

UNIT 30XV MODEL SIZE	40A		45A				50A			
MODULE	A	B	A		B		A		B	
TIER (MODEL NO. POS. 10)	H	H	M	H	M	H	S	M	S	M
UNIT SIZE INDICATED ON MODULE NAMEPLATE	40A	40B	45A	45A	45B	45B	50A	50A	50B	50B
SHIPPING WEIGHT (kg) (See Note)										
Al-Cu Condenser Coil	11083	936	11421	11461	936	1383	11421	11549	936	1383
MCHX Condenser Coil	10493	818	10821	10840	818	1192	10821	10874	818	1192
REFRIGERANT CHARGE)										
R-513A Refrigerant Charge (kg) Ckt A/ CKT B (RTPF)	230/195	–/40	238/202	248/193	–/40	–/61	245/205	260/210	–/40	–/61
R-513A Refrigerant Charge (kg) Ckt A/ CKT B (MCHX)	142/136	–/6	150/143	152/142	–/6	–/10	157/151	165/155	–/6	–/10

30XV 2-Piece Shipment Modules*, Process Brine Evaporator — SI

UNIT 30XV MODEL SIZE	50A	
MODULE	A	B
TIER (MODEL NO. POS. 10)	M	M
UNIT SIZE INDICATED ON MODULE NAMEPLATE	50A	50B
SHIPPING WEIGHT (kg) (See Note)		
Al-Cu Condenser Coil	11573	1386
MCHX Condenser Coil	10896	1195
REFRIGERANT CHARGE)		
R-513A Refrigerant Charge (lb) Ckt A/ CKT B (RTPF)	267/248	–/61
R-513A Refrigerant Charge (lb) Ckt A/ CKT B (MCHX)	171/197	–/10

LEGEND

Cu — Copper
Al — Aluminum
MCHX — Microchannel Heat Exchanger
RTPF — Round Tube/Plate Fin

*Two-piece shipment modules are combined at the job site. The resulting unit is roughly equivalent to standard size units. That is, 40A units combine the A and B modules to become a 30XV-400 unit. 45A units combine the two modules to become a 30XV-450 unit, and 50A units combine the two modules to become a 30XV-500 unit. Consult the appropriate Physical Data tables for remaining physical data for the combined units.

NOTE: Unit shipping weight includes the base unit plus coil trim panels, but no other options or accessories are included.

Unit Mounting Weights

Units with MCHX Condenser Coils — English

30XV UNIT SIZE	TIER (MODEL NO. POS. 10)	MOUNTING WEIGHT (lb) MCHX CONDENSER COILS										
		A	B	C	D	E	F	G	H	I	J	Total
140	S	1610	1130	2945	2871	1128	1425	—	—	—	—	11,110
	M	1610	1130	2961	2887	1144	1442	—	—	—	—	11,175
	H	1610	1130	2961	2887	1354	1651	232	232	—	—	12,058
160	S	1610	1130	2961	2887	1144	1442	—	—	—	—	11,175
	M	1610	1130	3008	2934	1400	1698	232	232	—	—	12,245
	H	1610	1130	3008	2934	1191	1488	416	416	459	459	13,112
180	S	1610	1130	3008	2934	1191	1488	—	—	—	—	11,362
	M	1610	1130	3026	2952	1418	1716	232	232	—	—	12,317
	H	1610	1130	3026	2952	1209	1506	416	416	459	459	13,184
200	S	1610	1130	3026	2952	1418	1716	232	232	—	—	12,317
	M	1610	1130	3083	3010	1266	1564	416	416	459	459	13,413
	H	1610	1130	3083	3010	1266	1564	613	613	657	657	14,202

30XV UNIT SIZE	TIER (MODEL NO. POS. 10)	MOUNTING WEIGHT (lb) MCHX CONDENSER COILS												
		A	B	C	D	E	F	G	H	I	J	K	L	Total
225	S	1316	1007	707	541	3014	2767	1996	1835	—	—	—	—	13,185
	M	1316	1007	707	541	3024	2777	2216	2055	232	232	—	—	14,108
	H	1316	1007	707	541	3024	2777	2006	1845	416	416	459	459	14,975

30XV UNIT SIZE	TIER (MODEL NO. POS. 10)	MOUNTING WEIGHT (lb) MCHX CONDENSER COILS																
		A	B	C	D	E	F	G	H	I	J	K	L	M	N	O	P	Total
250	S	1356	1039	752	576	2739	2750	2843	2811	296	254	—	—	—	—	—	—	15,415
	M	1356	1039	752	576	2806	2817	2910	2878	505	463	232	232	—	—	—	—	16,566
	H	1356	1039	752	576	2851	2862	2955	2923	296	254	416	416	459	459	—	—	17,614
275	S	1356	1039	752	576	2851	2862	2955	2923	296	254	—	—	—	—	—	—	15,864
	M	1356	1039	752	576	2820	2831	2925	2893	505	463	232	232	—	—	—	—	16,624
	H	1356	1039	752	576	2820	2831	2925	2893	296	254	416	416	459	459	—	—	17,492
300	S	1356	1039	752	576	2820	2831	2925	2893	505	463	232	232	—	—	—	—	16,624
	M	1356	1039	752	576	2838	2848	2942	2910	296	254	416	416	459	459	—	—	17,560
	H	1356	1039	752	576	2838	2848	2942	2910	296	254	626	626	670	670	—	—	18,401
325	S	1356	1039	752	576	2838	2848	2942	2910	296	254	416	416	459	459	—	—	17,560
	M	1356	1039	752	576	2857	2868	2961	2929	296	254	626	626	670	670	—	—	18,478
	H	1356	1039	752	576	2857	2868	2961	2929	296	254	572	572	572	572	615	615	19,407

30XV UNIT SIZE	TIER (MODEL NO. POS. 10)	MOUNTING WEIGHT (lb) MCHX CONDENSER COILS																
		A	B	C	D	E	F	G	H	I	J	K	L	M	N	O	P	Total
350	S	3959	2356	2273	1353	719	596	2442	2827	1616	2128	186	217	—	—	—	—	20,672
	M	3959	2356	2273	1353	773	651	2704	3089	1679	2191	398	429	235	235	—	—	22,326
	H	3959	2356	2273	1353	773	651	2704	3089	1679	2191	186	217	397	397	440	440	23,104

30XV UNIT SIZE	TIER (MODEL NO. POS. 10)	MOUNTING WEIGHT (lb) MCHX CONDENSER COILS																		
		A	B	C	D	E	F	G	H	I	J	K	L	M	N	O	P	Q	R	Total
400	S	3934	2357	2222	1331	892	772	2724	3500	1318	2041	786	784	550	549	—	—	—	—	23,760
	M	3934	2357	2222	1331	896	775	2747	3524	1328	2051	786	784	763	761	235	235	—	—	24,729
	H	3934	2357	2222	1331	896	775	2747	3524	1328	2051	786	784	550	549	397	397	440	440	25,507
450	S	3934	2357	2222	1331	896	775	2747	3524	1328	2051	786	784	763	761	235	235	—	—	24,729
	M	3934	2357	2222	1331	950	830	3032	3808	1413	2136	786	784	550	549	397	397	440	440	26,356
	H	3934	2357	2222	1331	950	830	3032	3808	1413	2136	786	784	550	549	613	613	657	657	27,221
500	S	3934	2357	2222	1331	950	830	3032	3808	1413	2136	786	784	550	549	397	397	440	440	26,356
	M	3934	2357	2222	1331	956	835	3068	3845	1429	2152	786	784	550	549	613	613	657	657	27,337

LEGEND

MCHX — Microchannel Heat Exchanger

NOTE: See pages 23-26 for mounting weight reference points.

Unit Mounting Weights (cont)

Units with MCHX Condenser Coils — SI

30XV UNIT SIZE	TIER (MODEL NO. POS. 10)	MOUNTING WEIGHT (kg) MCHX CONDENSER COILS										
		A	B	C	D	E	F	G	H	I	J	Total
140	S	730	513	1336	1302	512	647	—	—	—	—	5039
	M	730	513	1343	1310	519	654	—	—	—	—	5069
	H	730	513	1343	1310	614	749	105	105	—	—	5469
160	S	730	513	1343	1310	519	654	—	—	—	—	5069
	M	730	513	1364	1331	635	770	105	105	—	—	5554
	H	730	513	1364	1331	540	675	189	189	208	208	5948
180	S	730	513	1364	1331	540	675	—	—	—	—	5154
	M	730	513	1372	1339	643	778	105	105	—	—	5587
	H	730	513	1372	1339	548	683	189	189	208	208	5980
200	S	730	513	1372	1339	643	778	105	105	—	—	5587
	M	730	513	1398	1365	574	709	189	189	208	208	6084
	H	730	513	1398	1365	574	709	278	278	298	298	6442

30XV UNIT SIZE	TIER (MODEL NO. POS. 10)	MOUNTING WEIGHT (kg) MCHX CONDENSER COILS												
		A	B	C	D	E	F	G	H	I	J	K	L	Total
225	S	597	457	321	245	1367	1255	906	832	—	—	—	—	5981
	M	597	457	321	245	1372	1260	1005	932	105	105	—	—	6399
	H	597	457	321	245	1372	1260	910	837	189	189	208	208	6793

30XV UNIT SIZE	TIER (MODEL NO. POS. 10)	MOUNTING WEIGHT (kg) MCHX CONDENSER COILS																
		A	B	C	D	E	F	G	H	I	J	K	L	M	N	O	P	Total
250	S	615	471	341	261	1242	1247	1290	1275	134	115	—	—	—	—	—	—	6992
	M	615	471	341	261	1273	1278	1320	1306	229	210	105	105	—	—	—	—	7514
	H	615	471	341	261	1293	1298	1340	1326	134	115	189	189	208	208	—	—	7989
275	S	615	471	341	261	1293	1298	1340	1326	134	115	—	—	—	—	—	—	7196
	M	615	471	341	261	1279	1284	1327	1312	229	210	105	105	—	—	—	—	7541
	H	615	471	341	261	1279	1284	1327	1312	134	115	189	189	208	208	—	—	7934
300	S	615	471	341	261	1279	1284	1327	1312	229	210	105	105	—	—	—	—	7541
	M	615	471	341	261	1287	1292	1334	1320	134	115	189	189	208	208	—	—	7965
	H	615	471	341	261	1287	1292	1334	1320	134	115	284	284	304	304	—	—	8346
325	S	615	471	341	261	1287	1292	1334	1320	134	115	189	189	208	208	—	—	7965
	M	615	471	341	261	1296	1301	1343	1329	134	115	284	284	304	304	—	—	8381
	H	615	471	341	261	1296	1301	1343	1329	134	115	260	260	260	260	279	279	8803

30XV UNIT SIZE	TIER (MODEL NO. POS. 10)	MOUNTING WEIGHT (kg) MCHX CONDENSER COILS																
		A	B	C	D	E	F	G	H	I	J	K	L	M	N	O	P	Total
350	S	1796	1069	1031	614	326	271	1108	1282	733	965	84	98	—	—	—	—	9377
	M	1796	1069	1031	614	351	295	1227	1401	761	994	181	195	107	107	—	—	10 127
	H	1796	1069	1031	614	351	295	1227	1401	761	994	84	98	180	180	200	200	10 480

30XV UNIT SIZE	TIER (MODEL NO. POS. 10)	MOUNTING WEIGHT (kg) MCHX CONDENSER COILS																		
		A	B	C	D	E	F	G	H	I	J	K	L	M	N	O	P	Q	R	Total
400	S	1785	1069	1008	604	405	350	1236	1588	598	926	357	356	250	249	—	—	—	—	10 777
	M	1785	1069	1008	604	406	352	1246	1598	602	930	357	356	346	345	107	107	—	—	11 217
	H	1785	1069	1008	604	406	352	1246	1598	602	930	357	356	250	249	180	180	200	200	11 570
450	S	1785	1069	1008	604	406	352	1246	1598	602	930	357	356	346	345	107	107	—	—	11 217
	M	1785	1069	1008	604	431	376	1375	1727	641	969	357	356	250	249	180	180	200	200	11 955
	H	1785	1069	1008	604	431	376	1375	1727	641	969	357	356	250	249	278	278	298	298	12 347
500	S	1785	1069	1008	604	431	376	1375	1727	641	969	357	356	250	249	180	180	200	200	11 955
	M	1785	1069	1008	604	434	379	1392	1744	648	976	357	356	250	249	278	278	298	298	12 400

LEGEND

MCHX — Microchannel Heat Exchanger

NOTE: See pages 23-26 for mounting weight reference points.

Unit Mounting Weights (cont)

Units with Al/Cu Condenser Coils — English

30XV UNIT SIZE	TIER (MODEL NO. POS. 10)	MOUNTING WEIGHT (lb) Al/Cu CONDENSER COILS										
		A	B	C	D	E	F	G	H	I	J	Total
140	S	—	—	—	—	—	—	—	—	—	—	—
	M	1694	1215	3045	2972	1228	1526	—	—	—	—	11,680
	H	1697	1218	3048	2975	1470	1767	271	271	—	—	12,718
160	S	1697	1217	3048	2974	1231	1528	—	—	—	—	11,694
	M	1701	1221	3098	3025	1520	1817	275	275	—	—	12,930
	H	1701	1222	3099	3026	1282	1580	488	488	531	531	13,949
180	S	1699	1219	3097	3023	1280	1577	—	—	—	—	11,896
	M	1702	1222	3117	3044	1539	1836	261	261	—	—	12,982
	H	1702	1223	3118	3045	1301	1599	504	504	547	547	14,090
200	S	1702	1222	3117	3044	1539	1836	276	276	—	—	13,012
	M	1702	1223	3175	3102	1359	1656	489	489	532	532	14,260
	H	1706	1226	3179	3105	1362	1660	718	718	762	762	15,200

30XV UNIT SIZE	TIER (MODEL NO. POS. 10)	MOUNTING WEIGHT (lb) Al/Cu CONDENSER COILS												
		A	B	C	D	E	F	G	H	I	J	K	L	Total
225	S	1392	1083	783	617	3119	2872	2102	1940	—	—	—	—	13,910
	M	1393	1084	784	618	3130	2883	2322	2189	280	280	—	—	14,965
	H	1393	1084	784	618	3130	2883	2112	1951	493	493	536	536	16,013

30XV UNIT SIZE	TIER (MODEL NO. POS. 10)	MOUNTING WEIGHT (lb) Al/Cu CONDENSER COILS																
		A	B	C	D	E	F	G	H	I	J	K	L	M	N	O	P	Total
250	S	1422	1105	818	642	2834	2845	2967	2935	333	291	—	—	—	—	—	—	16,191
	M	1425	1108	821	646	2904	2915	3037	3005	574	532	273	273	—	—	—	—	17,514
	H	1426	1109	822	647	2950	2961	3083	3051	337	295	486	486	530	530	—	—	18,712
275	S	1424	1107	820	644	2948	2959	3081	3049	335	293	—	—	—	—	—	—	16,660
	M	1426	1109	822	646	2919	2930	3052	3020	575	533	274	274	—	—	—	—	17,582
	H	1427	1110	823	647	2920	2931	3053	3021	338	296	487	487	530	530	—	—	18,600
300	S	1426	1109	822	646	2919	2930	3052	3020	575	533	274	274	—	—	—	—	17,582
	M	1427	1111	824	648	2938	2949	3071	3039	339	297	487	487	531	531	—	—	18,679
	H	1430	1113	826	651	2941	2951	3074	3042	341	299	729	729	773	773	—	—	19,670
325	S	1427	1111	824	648	2938	2949	3071	3039	339	297	487	487	531	531	—	—	18,679
	M	1431	1114	827	651	2960	2971	3094	3062	342	300	729	729	774	774	—	—	19,757
	H	1431	1114	827	651	2960	2971	3093	3061	342	300	666	666	666	666	709	709	20,832

30XV UNIT SIZE	TIER (MODEL NO. POS. 10)	MOUNTING WEIGHT (lb) Al/Cu CONDENSER COILS																
		A	B	C	D	E	F	G	H	I	J	K	L	M	N	O	P	Total
350	S	4058	2455	2372	1452	808	686	2532	2916	1734	2246	227	258	—	—	—	—	21,746
	M	4061	2458	2375	1455	866	743	2797	3181	1800	2312	471	502	280	280	—	—	23,580
	H	4061	2459	2376	1455	866	743	2797	3181	1800	2312	230	261	470	470	514	514	24,510

30XV UNIT SIZE	TIER (MODEL NO. POS. 10)	MOUNTING WEIGHT (lb) Al/Cu CONDENSER COILS																		
		A	B	C	D	E	F	G	H	I	J	K	L	M	N	O	P	Q	R	Total
400	S	4036	2458	2324	1433	965	844	2854	3631	1390	2114	859	857	623	621	—	—	—	—	25,010
	M	4037	2459	2325	1434	989	868	2840	3617	1421	2144	860	858	865	864	280	280	—	—	26,140
	H	4037	2459	2325	1434	989	868	2840	3617	1421	2144	860	858	624	623	471	471	514	514	27,069
450	S	4037	2459	2325	1434	989	868	2840	3617	1421	2144	860	858	865	864	280	280	—	—	26,140
	M	4038	2461	2326	1435	1045	924	3126	3902	1507	2231	861	859	625	624	472	472	515	515	27,938
	H	4040	2463	2328	1437	1047	926	3128	3904	1509	2233	863	861	656	655	718	718	763	763	29,012
500	S	4038	2461	2326	1435	1045	924	3126	3902	1507	2231	861	859	625	624	472	472	515	515	27,938
	M	4047	2469	2334	1444	1059	938	3171	3948	1532	2255	870	868	663	661	725	725	769	769	29,247

LEGEND

Al/Cu — Aluminum/Copper

NOTE: See pages 23-26 for mounting weight reference points.

Unit Mounting Weights (cont)

Units with Al/Cu Condenser Coils — SI

30XV UNIT SIZE	TIER (MODEL NO. POS. 10)	MOUNTING WEIGHT (kg) Al/Cu CONDENSER COILS										
		A	B	C	D	E	F	G	H	I	J	Total
140	S	—	—	—	—	—	—	—	—	—	—	—
	M	769	551	1381	1348	557	692	—	—	—	—	5298
	H	770	552	1383	1349	667	802	123	123	—	—	5769
160	S	770	552	1382	1349	558	693	—	—	—	—	5304
	M	771	554	1405	1372	689	824	125	125	—	—	5865
	H	772	554	1406	1372	582	717	221	221	241	241	6327
180	S	771	553	1405	1371	581	716	—	—	—	—	5396
	M	772	554	1414	1381	698	833	118	118	—	—	5889
	H	772	555	1414	1381	590	725	229	229	248	248	6391
200	S	772	554	1414	1381	698	833	125	125	—	—	5902
	M	772	555	1440	1407	616	751	222	222	241	241	6468
	H	774	556	1442	1409	618	753	326	326	346	346	6894

30XV UNIT SIZE	TIER (MODEL NO. POS. 10)	MOUNTING WEIGHT (kg) Al/Cu CONDENSER COILS												
		A	B	C	D	E	F	G	H	I	J	K	L	Total
225	S	632	491	355	280	1415	1303	953	880	—	—	—	—	6310
	M	632	492	356	280	1420	1308	1053	993	127	127	—	—	6788
	H	632	492	356	280	1420	1308	958	885	223	223	243	243	7263

30XV UNIT SIZE	TIER (MODEL NO. POS. 10)	MOUNTING WEIGHT (kg) Al/Cu CONDENSER COILS																
		A	B	C	D	E	F	G	H	I	J	K	L	M	N	O	P	Total
250	S	645	501	371	291	1285	1290	1346	1331	151	132	—	—	—	—	—	—	7344
	M	646	503	373	293	1317	1322	1378	1363	261	242	124	124	—	—	—	—	7944
	H	647	503	373	293	1338	1343	1398	1384	153	134	220	220	240	240	—	—	8488
275	S	646	502	372	292	1337	1342	1397	1383	152	133	—	—	—	—	—	—	7557
	M	647	503	373	293	1324	1329	1385	1370	261	242	124	124	—	—	—	—	7975
	H	647	503	373	294	1325	1329	1385	1370	153	134	221	221	241	241	—	—	8437
300	S	647	503	373	293	1324	1329	1385	1370	261	242	124	124	—	—	—	—	7975
	M	647	504	374	294	1333	1338	1393	1378	154	135	221	221	241	241	—	—	8473
	H	649	505	375	295	1334	1339	1394	1380	155	136	330	330	351	351	—	—	8922
325	S	647	504	374	294	1333	1338	1393	1378	154	135	221	221	241	241	—	—	8473
	M	649	505	375	295	1343	1348	1403	1389	155	136	331	331	351	351	—	—	8962
	H	649	505	375	295	1343	1348	1403	1389	155	136	302	302	302	302	322	322	9449

30XV UNIT SIZE	TIER (MODEL NO. POS. 10)	MOUNTING WEIGHT (kg) Al/Cu CONDENSER COILS																
		A	B	C	D	E	F	G	H	I	J	K	L	M	N	O	P	Total
350	S	1841	1114	1076	659	367	311	1148	1323	787	1019	103	117	—	—	—	—	9864
	M	1842	1115	1077	660	393	337	1269	1443	816	1049	214	228	127	127	—	—	10 696
	H	1842	1115	1078	660	393	337	1269	1443	816	1049	105	119	213	213	233	233	11 117

30XV UNIT SIZE	TIER (MODEL NO. POS. 10)	MOUNTING WEIGHT (kg) Al/Cu CONDENSER COILS																		
		A	B	C	D	E	F	G	H	I	J	K	L	M	N	O	P	Q	R	Total
400	S	1831	1115	1054	650	438	383	1295	1647	631	959	390	389	283	282	—	—	—	—	11 344
	M	1831	1116	1054	650	449	394	1288	1640	644	973	390	389	393	392	127	127	—	—	11 857
	H	1831	1116	1054	650	449	394	1288	1641	644	973	390	389	283	282	213	213	233	233	12 278
450	S	1831	1116	1054	650	449	394	1288	1640	644	973	390	389	393	392	127	127	—	—	11 857
	M	1832	1116	1055	651	474	419	1418	1770	684	1012	391	390	284	283	214	214	234	234	12 672
	H	1833	1117	1056	652	475	420	1419	1771	685	1013	392	390	298	297	326	326	346	346	13 159
500	S	1832	1116	1055	651	474	419	1418	1770	684	1012	391	390	284	283	214	214	234	234	12 672
	M	1836	1120	1059	655	480	426	1438	1791	695	1023	395	394	301	300	329	329	349	349	13 266

LEGEND

Al/Cu — Aluminum/Copper

NOTE: See pages 23-26 for mounting weight reference points.

Unit Mounting Weight Reference Points
30XV140-200

UNIT 30XV SIZE	TIER (MODEL NO. POS. 10)		
	S	M	H
140	X	X	
160	X		
180	X		

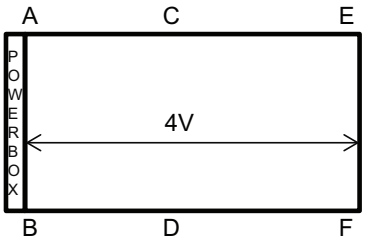

UNIT 30XV SIZE	TIER (MODEL NO. POS. 10)		
	S	M	H
140			X
160		X	
180		X	
200	X		

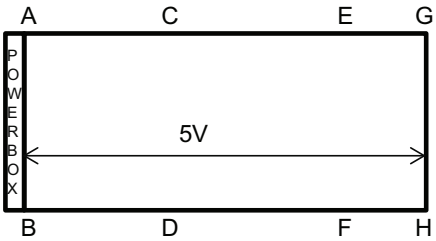

UNIT 30XV SIZE	TIER (MODEL NO. POS. 10)		
	S	M	H
160			X
180			X
200		X	

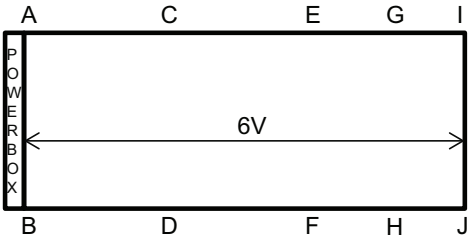

UNIT 30XV SIZE	TIER (MODEL NO. POS. 10)		
	S	M	H
200			X

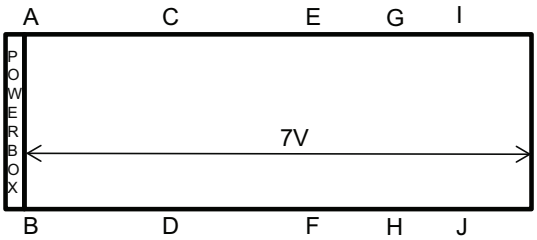

Letters indicate the general location of the mounting weight locations on the base of the unit.

NOTE: See pages 19-22 for mounting weight at reference points.

Unit Mounting Weight Reference Points (cont)

30XV225

UNIT 30XV SIZE	TIER (MODEL NO. POS. 10)		
	S	M	H
225	X		

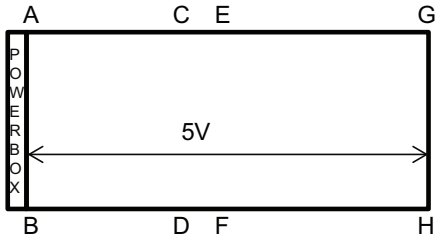

UNIT 30XV SIZE	TIER (MODEL NO. POS. 10)		
	S	M	H
225		X	

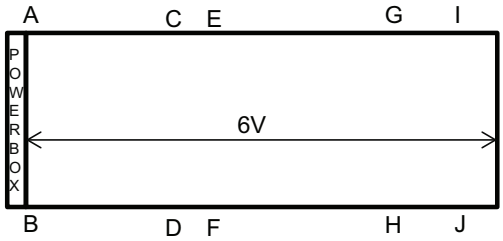

UNIT 30XV SIZE	TIER (MODEL NO. POS. 10)		
	S	M	H
225			X

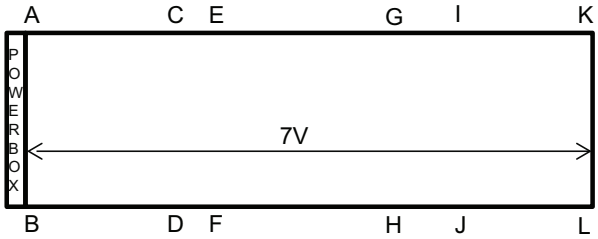

Letters indicate the general location of the mounting weight locations on the base of the unit.

NOTE: See pages 19-22 for mounting weight at reference points.

Unit Mounting Weight Reference Points (cont)

30XV250-325

UNIT 30XV SIZE	TIER (MODEL NO. POS. 10)		
	S	M	H
250	X		
275	X		

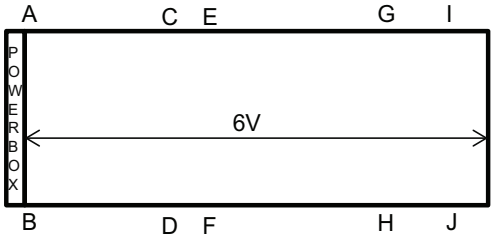

UNIT 30XV SIZE	TIER (MODEL NO. POS. 10)		
	S	M	H
250		X	
275		X	
300	X		

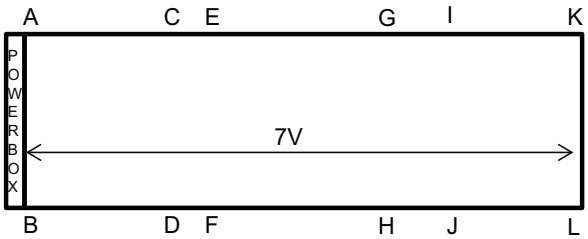

UNIT 30XV SIZE	TIER (MODEL NO. POS. 10)		
	S	M	H
250			X
275			X
300		X	
325	X		

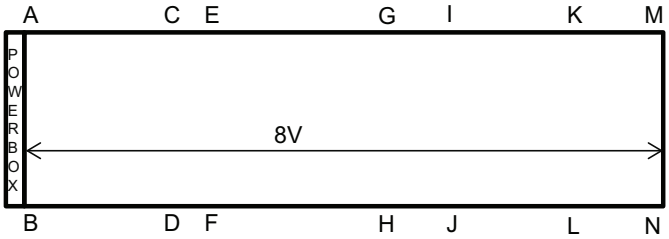

UNIT 30XV SIZE	TIER (MODEL NO. POS. 10)		
	S	M	H
300			X
325		X	

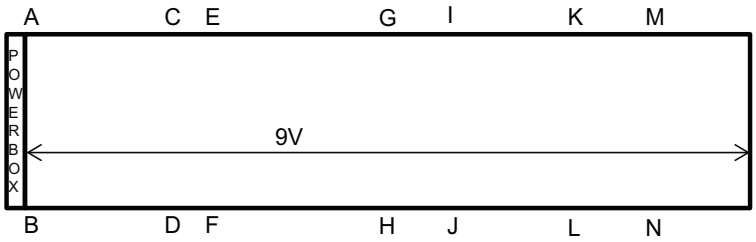

UNIT 30XV SIZE	TIER (MODEL NO. POS. 10)		
	S	M	H
325			X

Letters indicate the general location of the mounting weight locations on the base of the unit.

NOTE: See pages 19-22 for mounting weight at reference points.

Unit Mounting Weight Reference Points (cont)
30XV350-500

UNIT 30XV SIZE	TIER (MODEL NO. POS. 10)		
	S	M	H
350	X		

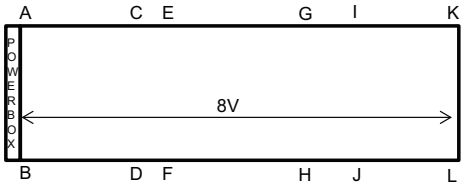

UNIT 30XV SIZE	TIER (MODEL NO. POS. 10)		
	S	M	H
350		X	
400	X		

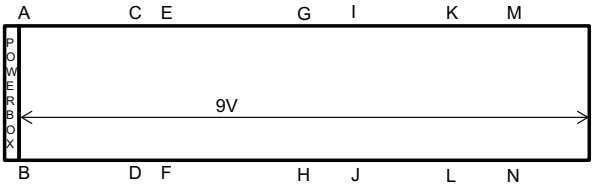

UNIT 30XV SIZE	TIER (MODEL NO. POS. 10)		
	S	M	H
350			X
400		X	
450	X		

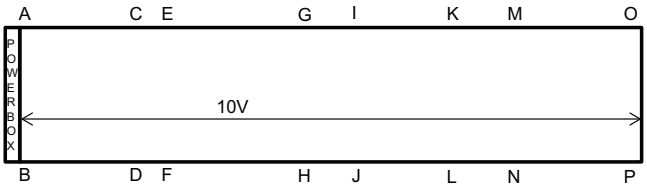

UNIT 30XV SIZE	TIER (MODEL NO. POS. 10)		
	S	M	H
400, 40A/B			X
450, 45A/B		X	
500, 50A/B	X		

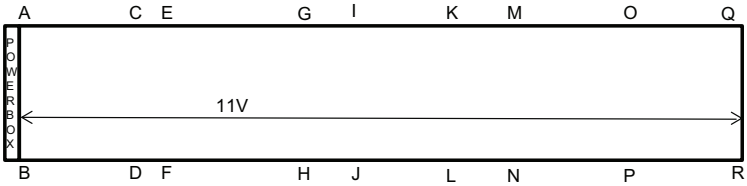

UNIT 30XV SIZE	TIER (MODEL NO. POS. 10)		
	S	M	H
450, 45A/B			X
500, 50A/B		X	

Letters indicate the general location of the mounting weight locations on the base of the unit.

NOTE: See pages 19-22 for mounting weight at reference points.

09FC Free Cooling Design* — English

UNIT 09FC (FREE COOLING)	020	030	040	050	060	070	080
CHASSIS DIMENSIONS (in.) (Note 1)							
Length	100	147	194	241	288	335	382
Width	88	88	88	88	88	88	88
Height	99	99	99	99	99	99	99
SHIPPING WEIGHT (lb) (Note 2)	3535	5042	6610	8379	9886	11433	12939
OPERATING WEIGHT (lb) (Note 3)	4352	6258	8226	10411	12318	14265	16171
FREE COOLING ARRANGEMENT							
No. Coils (Al/Cu or Al/Cu E-Coat)	4	6	8	10	12	14	16
Chilled Fluid Volume (gal.)	98	146	194	243	291	339	387
Maximum Fluid-Side Pressure (psig)	250	250	250	250	250	250	250
FREE COOLING FANS	Shrouded Axial Type, Vertical Discharge						
Maximum Fan Speed (rpm)	1140	1140	1140	1140	1140	1140	1140
No. Fans	4	6	8	10	12	14	16
WATER CONNECTIONS†							
Customer Inlet Connection Size (parallel free cooling configuration), Victaulic (in.)	6	6	6	6	6	6	6
Customer Inlet Connection Size (series free cooling configuration), Victaulic (in.)	N/A	N/A	N/A	6	6	6	6
Drain (NPT, in.)	1/4	1/4	1/4	1/4	1/4	1/4	1/4

* These data are only applicable to 30XV chillers which employ free cooling. When the 30XV is integreted with the 09FC free cooling design, the Physical Data for the complete assembly is altered by the information shown here. See the examples at the end of this section.

† The outlet connection (supply chilled fluid) for the application will be the 30XV evaporator leaving water connection size as shown in the 30XV Physical Data page.

NOTES:

1. More accurate dimensions may be obtained in the Chiller Submitted Drawing Manager or by contacting your Carrier sales representative.
2. Free cooling section shipping weight includes the base 09FC unit plus coil trim panels. The shipping weight is equal to the operating weight minus the weight of the fluid in the 09FC coils.
3. Free cooling section operating weight includes the base 09FC unit plus coil trim panels. The addition of other options or accessories will slightly increase the weight of the free cooling section of the chiller.
4. Depending upon the operating conditions, a given size of 30XV has the ability to be integrated with different sizes of the 09FC (free cooling section).

09FC Free Cooling Design* — SI

UNIT 09FC (FREE COOLING)	020	030	040	050	060	070	080
CHASSIS DIMENSIONS (mm) (Note 1)							
Length	2535	3729	4923	6117	7311	8505	9699
Width	2236	2236	2236	2236	2236	2236	2236
Height	2513	2513	2513	2513	2513	2513	2513
SHIPPING WEIGHT (kg) (Note 2)	1603	2287	2998	3801	4484	5186	5869
OPERATING WEIGHT (kg) (Note 3)	1974	2839	3731	4722	5587	6471	7335
FREE COOLING ARRANGEMENT							
No. Coils (Al/Cu or Al/Cu E-Coat)	4	6	8	10	12	14	16
Chilled Fluid Volume (L)	371	553	734	886	1060	1283	1465
Maximum Fluid-Side Pressure (kPa)	1724	1724	1724	1724	1724	1724	1724
FREE COOLING FANS	Shrouded Axial Type, Vertical Discharge						
Maximum Fan Speed (r/s)	19	19	19	19	19	19	19
No. Fans	4	6	8	10	12	14	16
WATER CONNECTIONS†							
Customer Inlet Connection Size (parallel free cooling configuration), Victaulic (in.)	6	6	6	6	6	6	6
Customer Inlet Connection Size (series free cooling configuration), Victaulic (in.)	N/A	N/A	N/A	6	6	6	6
Drain (NPT, in.)	1/4	1/4	1/4	1/4	1/4	1/4	1/4

* These data are only applicable to 30XV chillers which employ free cooling. When the 30XV is integreted with the 09FC free cooling design, the Physical Data for the complete assembly is altered by the information shown here. See the examples at the end of this section.

† The outlet connection (supply chilled fluid) for the application will be the 30XV evaporator leaving water connection size as shown in the 30XV Physical Data page.

NOTES:

1. More accurate dimensions may be obtained in the Chiller Submitted Drawing Manager or by contacting your Carrier sales representative.
2. Free cooling section shipping weight includes the base 09FC unit plus coil trim panels. The shipping weight is equal to the operating weight minus the weight of the fluid in the 09FC coils.
3. Free cooling section operating weight includes the base 09FC unit plus coil trim panels. The addition of other options or accessories will slightly increase the weight of the free cooling section of the chiller.
4. Depending upon the operating conditions, a given size of 30XV has the ability to be integrated with different sizes of the 09FC (free cooling section).

Physical data (cont)

09FC Weight Distribution — English

09FC UNIT SIZE	CONTACT POINT LOCATION WEIGHT (lb)															
	A	B	C	D	E	F	G	H	I	J	K	L	M	N	O	P
020	991	1137	1006	1154	—	—	—	—	—	—	—	—	—	—	—	—
030	1410	1663	1417	1672	—	—	—	—	—	—	—	—	—	—	—	—
040	955	1105	920	1065	847	862	1162	1182	—	—	—	—	—	—	—	—
050	971	1118	965	1111	1340	1429	1605	1711	—	—	—	—	—	—	—	—
060	1390	1645	1376	1629	1340	1429	1605	1711	—	—	—	—	—	—	—	—
070	1396	1643	1380	1623	912	1084	892	1060	902	1087	936	1128	—	—	—	—
080	941	1088	935	1082	864	1050	891	1084	922	1069	916	1063	884	1069	932	1127

09FC Weight Distribution — SI

09FC UNIT SIZE	CONTACT POINT LOCATION WEIGHT (kg)															
	A	B	C	D	E	F	G	H	I	J	K	L	M	N	O	P
020	450	517	457	525	—	—	—	—	—	—	—	—	—	—	—	—
030	641	756	644	760	—	—	—	—	—	—	—	—	—	—	—	—
040	434	502	418	484	385	392	528	537	—	—	—	—	—	—	—	—
050	441	508	439	505	609	650	730	778	—	—	—	—	—	—	—	—
060	632	748	626	740	609	650	730	778	—	—	—	—	—	—	—	—
070	635	747	627	738	415	493	405	482	410	494	425	513	—	—	—	—
080	428	495	425	492	393	477	405	493	419	486	416	483	402	486	424	512

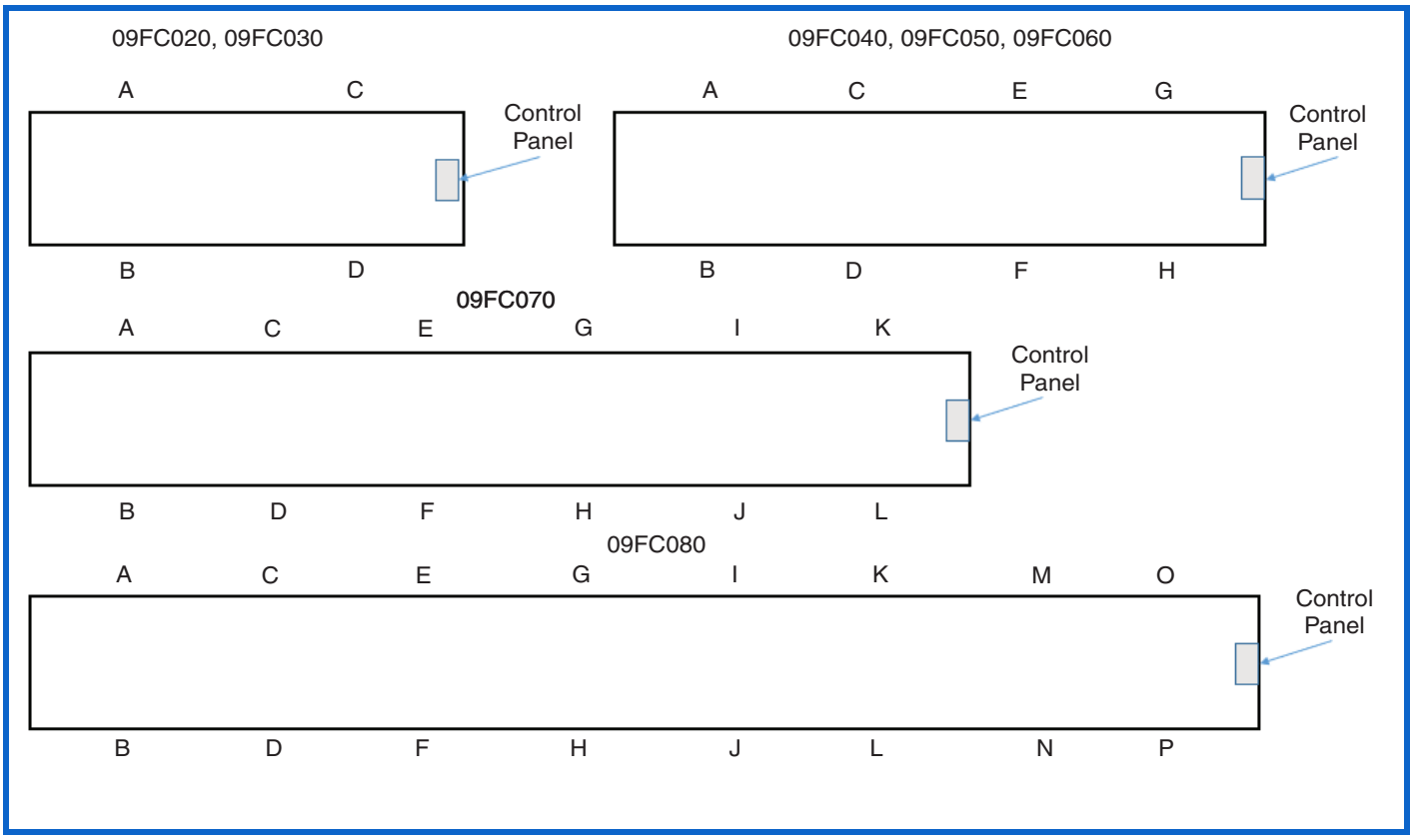

Free Cooling (09FC) Schematic Piping Configurations

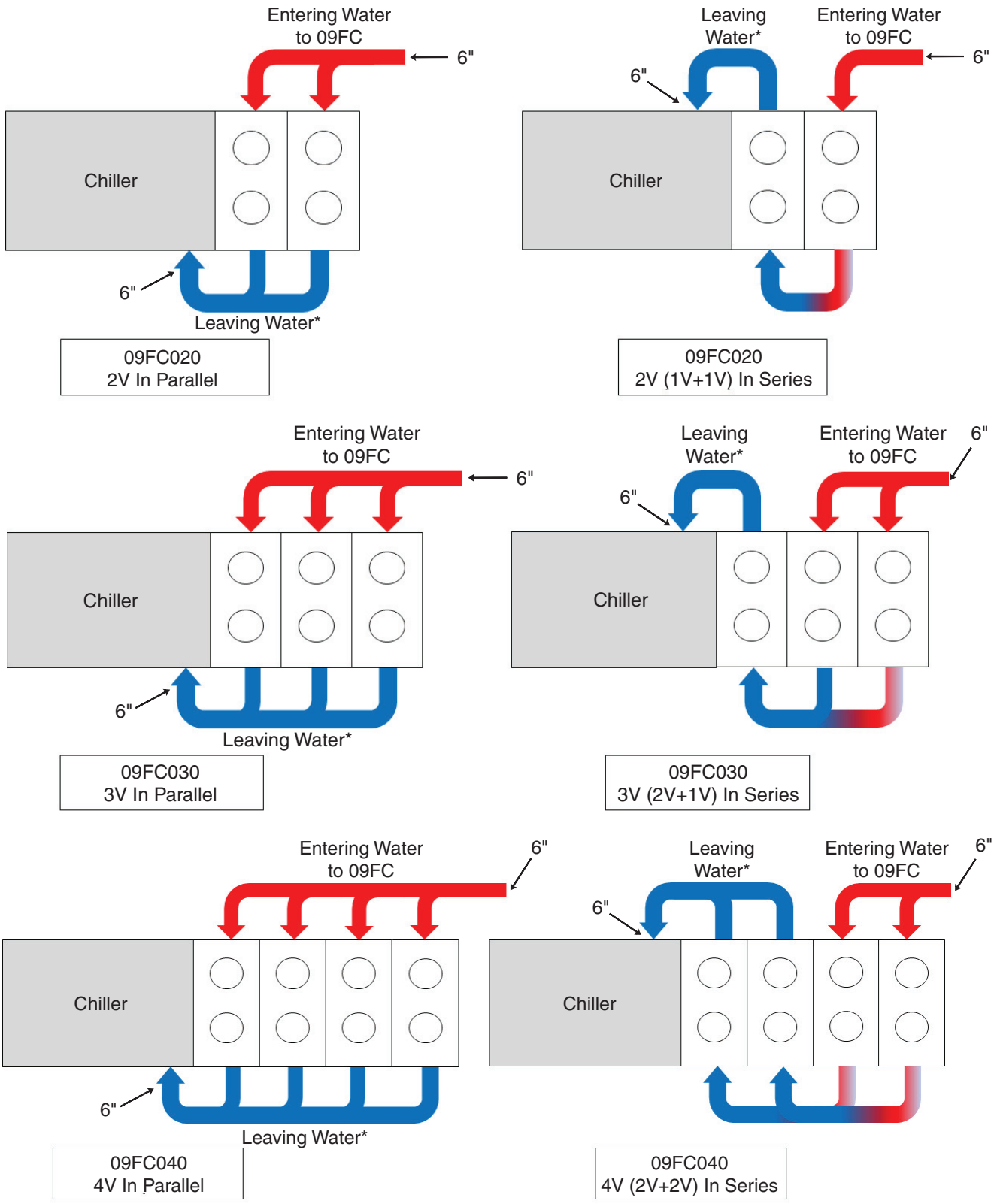

See the 09FC Installation Instructions for specific piping detail.

* The free cooling section leaving water temperature is the chiller entering water temperature.

Free Cooling (09FC) Schematic Piping Configurations (cont)

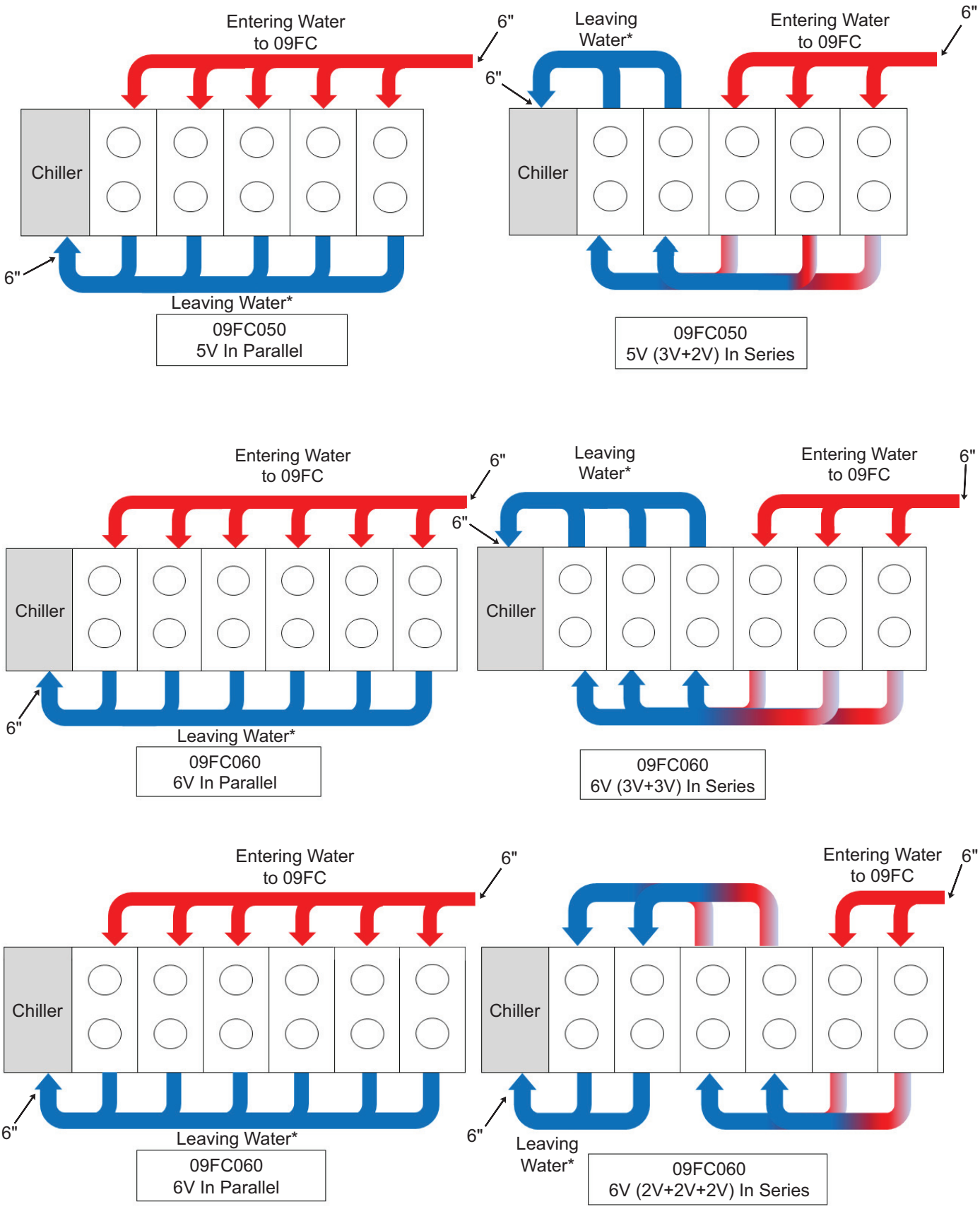

Free Cooling (09FC) Schematic Piping Configurations (cont)

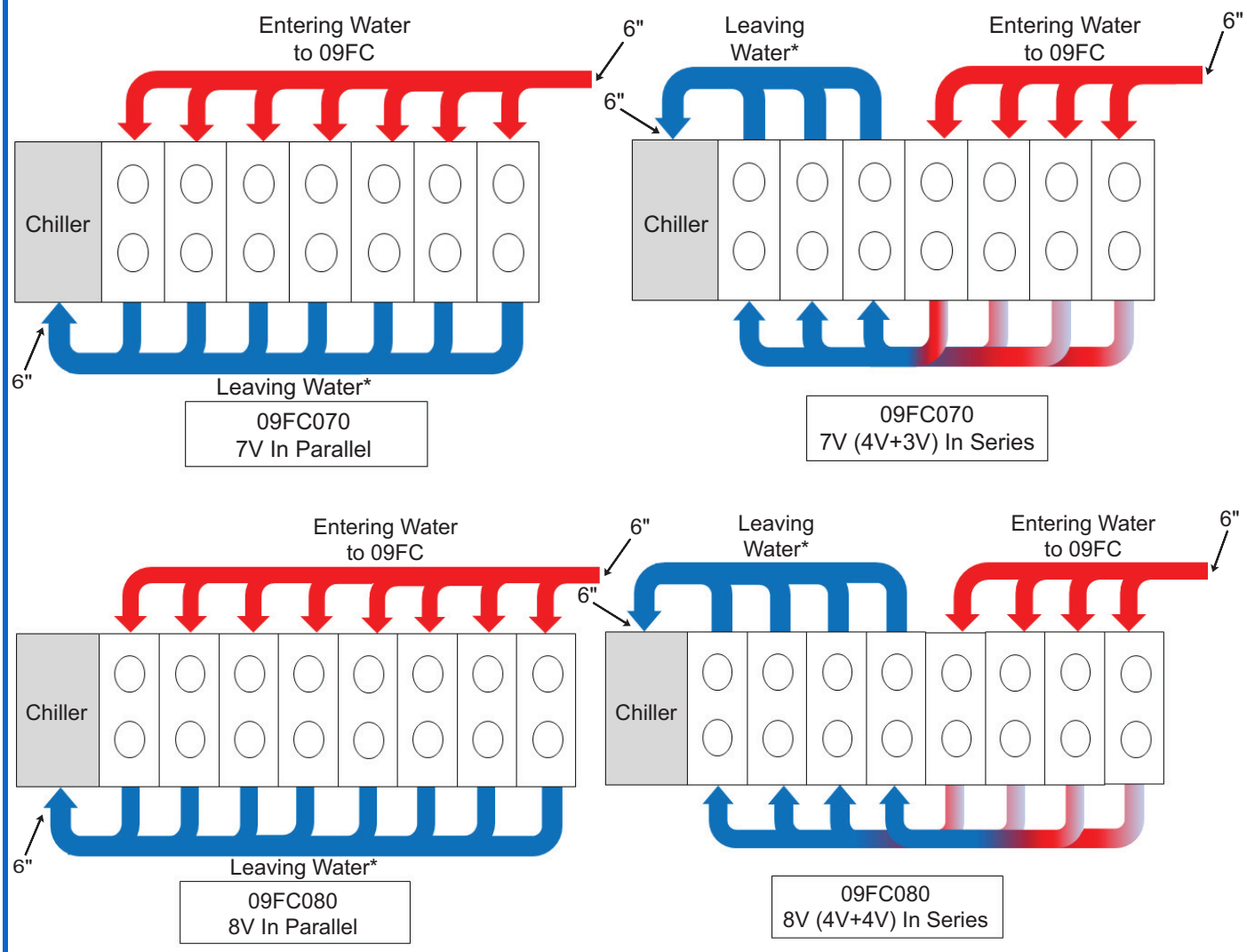

Physical data (cont)

Free Cooling Integrated with 30XV - Example 1 (English)
30XV180S+ (MCHX and standard, 2-pass evaporator) Including 09FC020

Note that this free cooling module (size 020) may be offered in either a series or a parallel arrangement, and the data shown here are accurate for both piping arrangements.

	MECHANICAL COOLING SECTION	FREE COOLING SECTION	COMPLETE UNIT
CHASSIS DIMENSIONS (in.)			
Length	206	100	306 (plus piping allowance)*
Width	88	88	88
Height	99	99	99
SHIPPING WEIGHT (lb)	11152	3535	14687
OPERATING WEIGHT (lb)	11362	4352	15714
REFRIGERANT TYPE (Standard Evaporator)	R-513A	N/A	R-513A
Refrigerant Charge (lb) CKT A/ CKT B (MCHX)	132/143	N/A	132/143
COMPRESSOR (Semi-Hermetic Twin Rotary Screw)			
Quantity	2	N/A	2
Full Load Capacity Split CKT A/CKTB	50/50	N/A	50/50
Minimum Capacity (%)†	<15	N/A	<15
EVAPORATOR & FREE COOLING (Fluid Volume and Pressure)			
Net Fluid Volume (gal.)	25	98	123
Maximum Refrigerant Pressure (psig)	220	N/A	220
Maximum Fluid-Side Pressure (psig)	300	250	250**
COIL QUANTITY (Mechanical Cooling and Free Cooling Sections)			
No. Coils	4/4 ††	4	12
FANS	Shrouded Axial Type, Vertical Discharge		
Maximum Fan Speed (rpm)	1140	1140	1140
No. Fans (Ckt A/ CKT B, or total for Free Cooling Section)	4/4	4	12
WATER CONNECTIONS			
Drain (NPT, in.)	3/8	1/4	See Columns To The Left
Evaporator Outlet, Victaulic (in.)	5	N/A	5
Free Cooling Arrangement Inlet, (in.)	N/A	6	6

* The complete unit length will include a piping allowance (space) between the chiller and the free cooling section. In some cases, including the cases shown here, the recommended space is 24 inches. See the 30XV installation instructions for more information.

† Using only the mechanical cooling portion of the chiller.

** The maximum unit fluid-side pressure is the smaller value of the fluid containing vessels, which is the free cooling section.

†† This is indicating the number of coils in Ckt A/Ckt B.

Applicable Piping Schematic for Example Shown Above

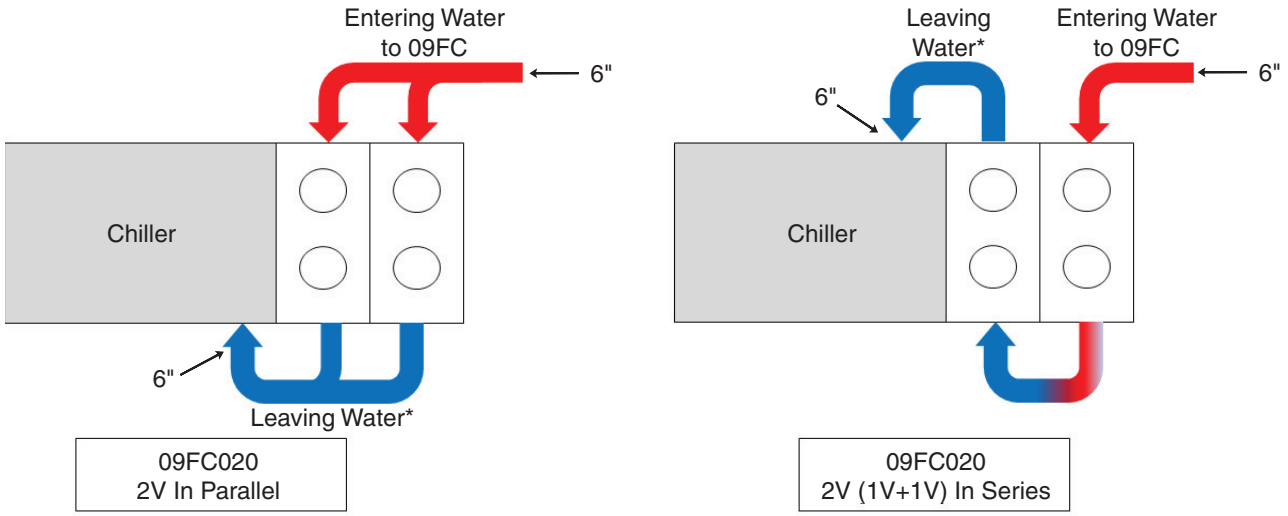

See the 09FC Installation Instructions for specific piping detail.

* The free cooling section leaving water temperature is the chiller entering water temperature.

Physical data (cont)

Free Cooling Integrated with 30XV - Example 1 (SI)
30XV180S+ (MCHX and standard, 2-pass evaporator) Including 09FC020

Note that this free cooling module (size 020) may be offered in either a series or a parallel arrangement, and the data shown here are accurate for both piping arrangements.

	MECHANICAL COOLING SECTION	FREE COOLING SECTION	COMPLETE UNIT
CHASSIS DIMENSIONS (mm)			
Length	5226	2535	7761(plus piping allowance)*
Width	2236	2236	2236
Height	2513	2513	2513
SHIPPING WEIGHT (kg)	5058	1603	6661
OPERATING WEIGHT (kg)	5154	1974	7128
REFRIGERANT TYPE (Standard Evaporator)	R-513A	N/A	R-513A
Refrigerant Charge (kg) CKT A/ CKT B (MCHX)	60/65	N/A	60/65
COMPRESSOR (Semi-Hermetic Twin Rotary Screw)			
Quantity	2	N/A	2
Full Load Capacity Split CKT A/CKTB	50/50	N/A	50/50
Minimum Capacity (%)†	<15	N/A	<15
EVAPORATOR & FREE COOLING (Fluid Volume and Pressure)			
Net Fluid Volume (L)	95	371	466
Maximum Refrigerant Pressure (kPa)	1517	N/A	1517
Maximum Fluid-Side Pressure (kPa)	2068	1724	1724**
COIL QUANTITY (Mechanical Cooling and Free Cooling Sections)			
No. Coils	4/4 ††	4	12
FANS	Shrouded Axial Type, Vertical Discharge		
Maximum Fan Speed (r/s)	19	19	19
No. Fans (Ckt A/ CKT B, or total for Free Cooling Section)	4/4	4	12
WATER CONNECTIONS			
Drain (NPT, in.)	3/8	1/4	See Columns To The Left
Evaporator Outlet, Victaulic (in.)	5	N/A	5
Free Cooling Arrangement Inlet, (in.)	N/A	6	6

* The complete unit length will include a piping allowance (space) between the chiller and the free cooling section. In some cases, including the cases shown here, the recommended space is 610 mm. See the 30XV installation instructions for more information.

† Using only the mechanical cooling portion of the chiller.

** The maximum unit fluid-side pressure is the smaller value of the fluid containing vessels, which is the free cooling section.

†† This is indicating the number of coils in Ckt A/Ckt B.

Applicable Piping Schematic for Example Shown Above

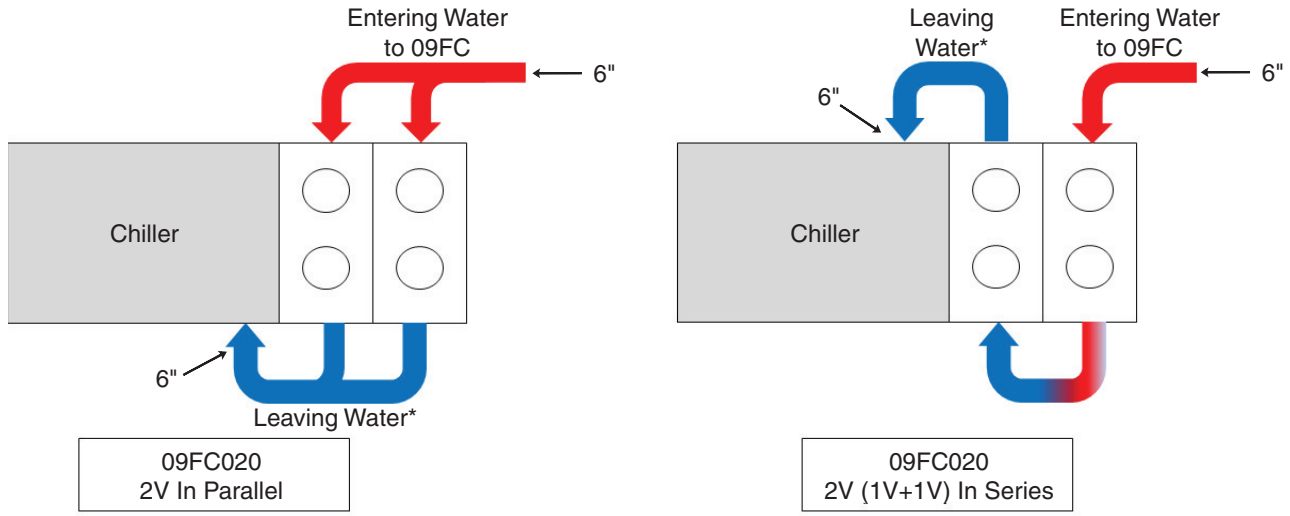

See the 09FC Installation Instructions for specific piping detail.

* The free cooling section leaving water temperature is the chiller entering water temperature.

Free Cooling Integrated with 30XV - Example 2 (English)
30XV300S+ (MCHX and standard, 2-pass evaporator) Including 09FC050

Note that this free cooling module (size 050) may be offered in either a series or a parallel arrangement, and the data shown here are accurate for both piping arrangements.

	MECHANICAL COOLING SECTION	FREE COOLING SECTION	COMPLETE UNIT
CHASSIS DIMENSIONS (in.)			
Length	347	241	588 (plus piping allowance)*
Width	88	88	88
Height	99	99	99
SHIPPING WEIGHT (lb)	16207	8379	24586
OPERATING WEIGHT (lb)	16624	10411	27035
REFRIGERANT TYPE (Standard Evaporator)	R-513A	N/A	R-513A
Refrigerant Charge (lb) CKT A/ CKT B (MCHX)	198/209	N/A	198/209
COMPRESSOR (Semi-Hermetic Twin Rotary Screw)			
Quantity	2	N/A	2
Full Load Capacity Split CKT A/CKTB	50/50	N/A	50/50
Minimum Capacity (%)†	<15	N/A	<15
EVAPORATOR & FREE COOLING (Fluid Volume and Pressure)			
Net Fluid Volume (gal.)	50	243	293
Maximum Refrigerant Pressure (psig)	220	N/A	220
Maximum Fluid-Side Pressure (psig)	300	250	250**
COIL QUANTITY (Mechanical Cooling and Free Cooling Sections)			
No. Coils	7/7 ††	10	24
FANS	Shrouded Axial Type, Vertical Discharge		
Maximum Fan Speed (rpm)	1140	1140	1140
No. Fans (Ckt A/ CKT B, or total for Free Cooling Section)	7/7	10	24
WATER CONNECTIONS			
Drain (NPT, in.)	3/8	1/4	See Columns To The Left
Evaporator Outlet, Victaulic (in.)	8	N/A	8
Free Cooling Arrangement Inlet, (in.)	N/A	6	6

* The complete unit length will include a piping allowance (space) between the chiller and the free cooling section. In some cases, including the cases shown here, the space may be 1 inch or less. See the 30XV installation instructions for more information.

† Using only the mechanical cooling portion of the chiller.

** The maximum unit fluid-side pressure is the smaller value of the fluid containing vessels, which is the free cooling section.

†† This is indicating the number of coils in Ckt A/Ckt B.

Applicable Piping Schematic

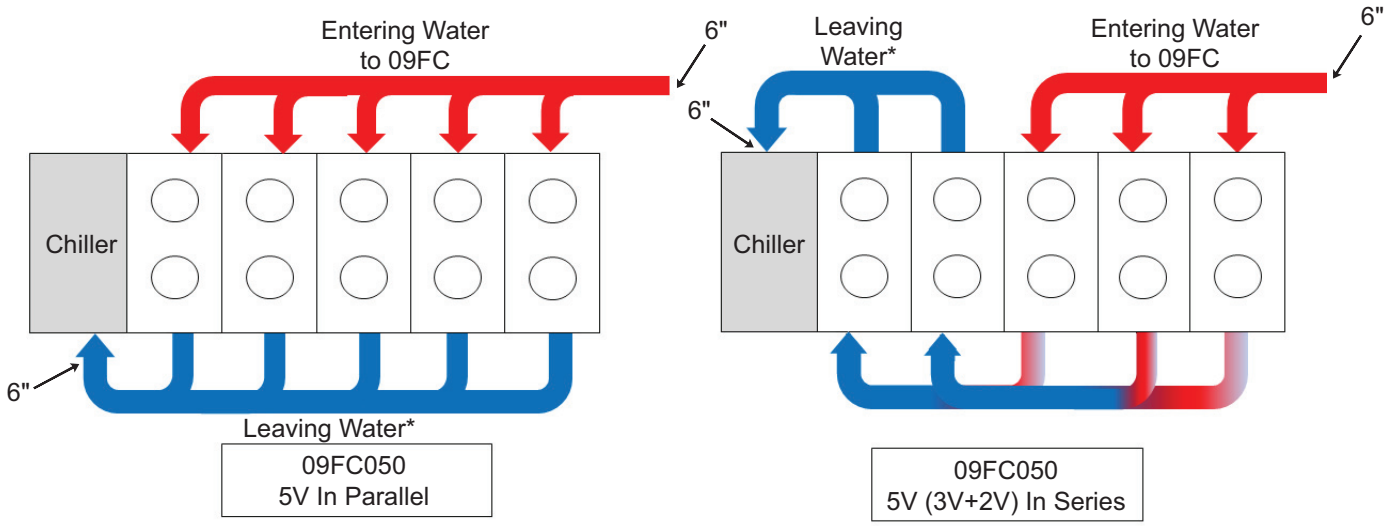

Physical data (cont)

Free Cooling Integrated with 30XV - Example 2 (SI)
30XV300S+ (MCHX and standard, 2-pass evaporator) Including 09FC050

Note that this free cooling module (size 050) may be offered in either a series or a parallel arrangement, and the data shown here are accurate for both piping arrangements.

	MECHANICAL COOLING SECTION	FREE COOLING SECTION	COMPLETE UNIT
CHASSIS DIMENSIONS (mm)			
Length	8808	6117	14925 (plus piping allowance)*
Width	2236	2236	2236
Height	2513	2513	2513
SHIPPING WEIGHT (kg)	7351	3801	11152
OPERATING WEIGHT (kg)	7541	4722	12263
REFRIGERANT TYPE (Standard Evaporator)	R-513A	N/A	R-513A
Refrigerant Charge (kg) CKT A/ CKT B (MCHX)	90/95	N/A	90/95
COMPRESSOR (Semi-Hermetic Twin Rotary Screw)			
Quantity	2	N/A	2
Full Load Capacity Split CKT A/CKTB	50/50	N/A	50/50
Minimum Capacity (%)†	<15	N/A	<15
EVAPORATOR & FREE COOLING (Fluid Volume and Pressure)			
Net Fluid Volume (L)	189	886	1075
Maximum Refrigerant Pressure (kPa)	1517	N/A	1517
Maximum Fluid-Side Pressure (kPa)	2068	1724	1724**
COIL QUANTITY (Mechanical Cooling and Free Cooling Sections)			
No. Coils	7/7 ††	10	24
FANS	Shrouded Axial Type, Vertical Discharge		
Maximum Fan Speed (r/s)	19	19	19
No. Fans (Ckt A/ CKT B, or total for Free Cooling Section)	7/7	10	24
WATER CONNECTIONS			
Drain (NPT, in.)	3/8	1/4	See Columns To The Left
Evaporator Outlet, Victaulic (in.)	8	N/A	8
Free Cooling Arrangement Inlet, (in.)	N/A	6	6

* The complete unit length will include a piping allowance (space) between the chiller and the free cooling section. In some cases, including the cases shown here, the space may be 25 mm or less. See the 30XV installation instructions for more information.

† Using only the mechanical cooling portion of the chiller.

** The maximum unit fluid-side pressure is the smaller value of the fluid containing vessels, which is the free cooling section.

†† This is indicating the number of coils in Ckt A/Ckt B.

Applicable Piping Schematic

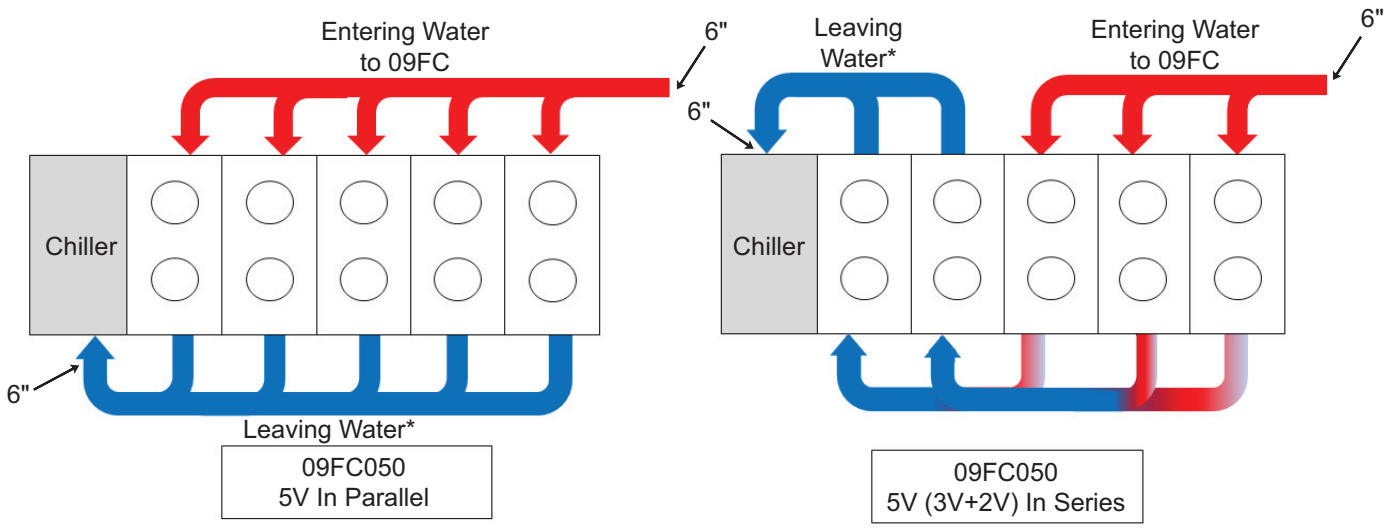

ITEM	FACTORY-INSTALLED OPTION	FIELD-INSTALLED ACCESSORY
Condenser Coil and Fan Options		
MCHX, E-Coat	X	
Aluminum Fins/Copper Tube	X	
Aluminum Fins/Copper Tube, E-Coat	X	
Low Sound Kit	X	
Sound Optimization	X	
Controls/Communication Options		
BACnet/Modbus Translator Control	X	X
Energy Management Module (includes GFI)	X	X
LonWorks Translator	X	X
Dual Chiller Accessory Kit		X
Variable Speed Condenser Fans (standard tier only)	X	
ECM fans	X	
High-Static Fans (units with variable speed condenser fans only)	X	
Display Heater for Control Panel		X
Evaporator Options		
One-Pass Evaporator (flooded type)	X	
Three-Pass Evaporator	X	
Evaporator for Brine Application (flooded type, 2-pass only)	X	
Evaporator for Process Brine Application (1-pass only)	X	
Remote Evaporator	X	
Remote Evaporator Assembly Kit		X
Electrical Options		
Unit-Mounted Main Disconnect, Non-Fused	X	
Control Transformer (automatically included for 50 Hz)	X	
Convenience Outlet (not available at 380 v)		X
PM Compressor Motor	X	
High SCCR (Short Circuit Current Rating) (limited availability on 208/230 V units - see option description)	X	
Refrigeration Circuit Options		
Isolation Valve	X	
Suction Line Insulation	X	
Security/Packaging Option		
Two-Piece Shipment (unit sizes 400H, 450M, 450H, 500S and 500M only)	X	
Security Grilles	X	X
Security Grilles (Sides) and Hail Guard (Ends)	X	
Full Hail Guard	X	X
Condenser Coil Trim Panels	X	X

Factory-installed options

Condenser coil options are available to match coil construction to the site conditions for the best durability. Refer to the Condenser Coil Corrosion Protection Options table on page 38 or the appropriate selection guide for more information.

One-pass evaporator provides a lower pressure drop through the evaporator for applications with low delta T (temperature) or high flow or where the evaporators are piped in a series arrangement.

Three-pass evaporator provides the ability for the chiller to operate at lower evaporator water flow values than evaporators with other pass options. This is particularly beneficial in variable-flow applications.

Evaporator for brine application provides the preferred evaporator for applications employing ethylene glycol or propylene glycol in the chilled-fluid loop which have leaving-fluid temperatures down to 20°F (–6.7°C).

Evaporator for process brine application provides the preferred evaporator for applications employing ethylene glycol or propylene glycol in the chilled-fluid loop which have leaving-fluid temperatures down to 10°F (–12.2°C).

Remote evaporator provides an evaporator for applications in which the evaporator will not be an integral part of the chiller package. When this option is chosen, the chiller will be shipped from the factory minus the evaporator and without refrigerant, but with a remote evaporator assembly kit. The evaporator itself will be shipped separately with a nitrogen charge. The refrigerant will need to be acquired and charged locally. The piping from the chiller to the evaporator is not part of the factory supply and is the responsibility of the installing contractor. All coil types are available when a remote evaporator is employed, but see the remote evaporator assembly kit for more detail as well as general installation guidelines.

Energy management module provides energy management capabilities to minimize chiller energy consumption. Several features are provided with this module including leaving fluid temperature reset, cooling set point or demand limit control from a 4 to 20 mA signal, space temperature reset (requires field-installed space temperature sensor), 2-step demand limit control (from 0 to 100%) activated by a remote contact closure, and discrete input for "Ice Done" indication for ice storage system interface. When this option is selected, a GFI convenience outlet is also included.

ECM fans provide an increase in fan efficiency when compared to standard fan motors while also proving variable speed fan output.

PM compressor motors provide an increase in compressor motor efficiency when compared to standard compressor motors.

High SCCR (short circuit current rating) devices allow the chiller to tolerate a 65 kA (all voltages except 575-v) or a 35 kA (575-v units) short circuit current for a brief period of time while protecting downstream components. The high SCCR provides a higher level of protection than standard chiller components. At 208/230-v, this option is only available with the combination of dual point power and unit sizes 140-200. The standard SCCR rating is dependent on both voltage and unit size as shown in the SCCR Voltage Table.

SCCR Voltage Table

DESCRIPTION	30XV140-325		30XV350-500	
VOLTAGE	208-460V*	575V	380-460V	575V
Standard SCCR				
Single Point Power	25 kAIC	10 kAIC	35 kAIC	18 kAIC
Single Point Power with Disconnect	25 kAIC	18 kAIC	35 kAIC	18 kAIC
Dual Point Power	25 kAIC	18 kAIC	25 kAIC	10 kAIC
Dual Point Power with Disconnect	25 kAIC	18 kAIC	—	—
High SCCR				
Single Point Power	65 kAIC	35 kAIC	65 kAIC	35 kAIC
Single Point Power with Disconnect	65 kAIC	35 kAIC	65 kAIC	35 kAIC
Dual Point Power	65 kAIC	35 kAIC	65 kAIC	35 kAIC
Dual Point Power with Disconnect	65 kAIC	35 kAIC	—	—

LEGEND

kAIC — Kilo-Amperes Interrupting Capacity

*208/230V Single Point Power with Disconnect is not available.

Isolation valve provides a means of isolating the compressors from the evaporator vessel, which is beneficial in servicing the chiller. The isolation option comes in various configurations depending on the installation region (Middle Eastern or elsewhere). On all units which are not installed in the Middle East region, liquid line service valves and motorized discharge service valves are always provided per refrigerant circuit. For Middle Eastern regions only, in addition to the liquid line service valves, manual discharge valves are standard and motorized discharge service valves are optional. The selection of the isolation valve option results in chillers which are equipped with a liquid line service valve, a discharge service valve (motorized or manual type), and a series of valves on or near the evaporator. The net effect is to provide isolation capability in the condenser area, the evaporator area, and the compressor area.

Unit-mounted non-fused disconnect option provides non-fused disconnect for unit power located at the unit. This option is not available with dual point power in sizes 350-500.

Suction line insulation is tubular closed-cell insulation. This option is recommended for areas of high dewpoints where condensation may be a concern.

BACnet/Modbus translator control provides an interface between the chiller and a BACnet Local Area Network (LAN, i.e., MS/TP EIA-485). The BACnet/Modbus translator control is also available as a field-installed accessory. Field programming is required.

LonWorks Translator provides an interface between the chiller and a Local Operating Network (LON, i.e., LonWorks[1] FT-10A ANSI/EIA-709.1). The LON translator control is also available as a field-installed accessory. Field programming is required.

Condenser coil trim panels provide an aesthetic, finished appearance for the condenser coil ends of the compressor side of the unit. Condenser coil trim panels are also available as a field-installed accessory.

Control transformer is sized to supply the needs of the control circuit from the main power supply. This feature is automatically provided on 50 Hz chillers.

Variable speed condenser fans control the speed of all fans for improvement in part load efficiency and sound levels. Additionally, variable speed condenser fans maintain head pressure control down to –20°F (–29°C) ambient temperature with the use of glycol and wind baffles or hail guards. Varying the speed of all fans on a circuit to a prescribed speed provides accurate head pressure control to the most efficient point while achieving optimum usage of the coils to accomplish excellent part-load efficiency. Variable speed condenser fans also allow the chiller to operate at ambient temperatures as high as 125.6°F (52°C). This option is only available on standard-tier units because both the medium-tier and high-tier units incorporate this as a standard feature. Variable speed condenser fans are always provided on 575 v units, and they are not available for unit sizes 225-500 at 208/230 v or for unit size 140 standard tier at any voltage.

High-static fans are condenser fans which provide up to 100 Pa ESP (external static pressure), as opposed to the standard fans which provide up to 50 Pa ESP. The high-static fan option is only available on applications employing variable speed condenser fans.

Two-piece shipment is a factory-installed option which provides 2-section shipment of the largest 30XV models such that both resulting sections can fit within 40-foot containers. This option is only available on unit sizes 400H, 450M, 450H, 500S and 500M.

Security grilles are coated grilles that protect the condenser, evaporator, and compressors. These are also available as an accessory.

Security grilles (sides) and hail guard (ends) consist of louvered panels on the ends of the machine covering down to the bottom of the control panel, and security grilles on the sides of the machine. These coverings firmly fasten to the machine frame and provide complete side coverage from the top to the bottom of the unit. A hail guard accessory is also available, but it is a full hail guard and therefore it is a different design than this factory option. The use of a hail guard also provides the functionality of a wind baffle.

Full hail guard consists of louvered panels on the sides and ends of the machine. These hail guards firmly fasten to the machine, and they provide side coverage from the top to the bottom of the unit as well as covering the unit ends down to the bottom of the control panel. Coil trim panels are not available with the full hail guard because this hail guard covers all coil tubing. This factory option is also available as an accessory. The use of a hail guard also provides the functionality of a wind baffle.

Low sound kit provides the compressors with sheet metal enclosures with sound absorbing panels and also provides an external muffler between each compressor and its associated oil separator. (Note: The muffler for 350 circuit A and 400-500 ton units is internal to the oil separator and is provided regardless of sound option.)

Sound optimization provides a chiller which has been selected with customized software to best meet customer sound and capacity requirements.

Field-installed accessories

Energy management module provides energy management capabilities to minimize chiller energy consumption. Several features are provided with this module including leaving fluid temperature reset, cooling set point, space temperature reset (requires field-installed space temperature sensor) or demand limit control from a 4 to 20 mA signal, 2-step demand limit control (from 0 to 100%) activated by a remote contact closure (one-step demand limit does not require the energy management module), and discrete input for "Ice Done" indication for ice storage system interface.

Remote evaporator assembly kit provides the installation guidelines for applications in which the evaporator is not an integral part of the chiller. For such applications, the refrigerant will need to be acquired and charged locally. The piping from the chiller to the evaporator is the responsibility of the installing contractor. This assembly kit, which includes some hardware as well as assembly instructions, is automatically included when the remote evaporator option is selected.

Convenience outlet includes 4-amp GFI (ground fault interrupt) receptacle. Convenience outlet is 115-v female receptacle. Not available with 380-v units. This item is included when a factory-installed energy management module is selected.

BACnet/Modbus translator control provides an interface between the chiller and a BACnet Local Area Network (LAN, i.e., MS/TP EIA-485). The BACnet/Modbus translator control is also available as a factory-installed option. Field programming is required.

LonWorks translator provides an interface between the chiller and a Local Operating Network (LON, i.e., LonWorks FT-10A ANSI/EIA-709.1). The LON translator control is also available as a factory-installed option. Field programming is required.

Condenser coil trim panels provide an aesthetic, finished appearance for the condenser coil ends of the compressor side of the unit. Condenser coil trim panels are also available as a factory-installed option.

Full hail guard consists of louvered panels on the sides and ends of the machine. These hail guards firmly fasten to the machine, and they provide side coverage from the top to the bottom of the unit as well as covering the unit ends down to the bottom of the control panel. Coil trim panels are not required with the full hail guard because this hail guard covers all coil tubing. This field-installed accessory is also available as a factory option. The use of a hail guard also provides the functionality of a wind baffle.

Security grilles are coated grilles that protect the condenser, evaporator, and compressors. These are also available as a factory-installed option.

Dual chiller accessory kit provides the additional hardware (thermistors, wells, connectors) required for applications with 2 chillers running in parallel.

Display heater for control panel provides ambient heat to the area surrounding the Carrier controller where the installation is subject to extremely low ambient conditions (below –4°F [–20°C]) for extended periods of time.

Condenser Coil Corrosion Protection Options

ENVIRO-SHIELD™ OPTION*	ENVIRONMENT				
	Standard	Mild Coastal	Severe Coastal	Industrial	Combined Industrial/Coastal
Novation® Heat Exchanger (Standard)	See NACO Packaged Chiller Builder*				
Novation Heat Exchanger, E-coat	See NACO Packaged Chiller Builder*				
AL Fins	X				
AL Fins, E-coat			X	X	X

LEGEND

AL — Aluminum
NACO — North American Commercial Operations

* See NACO Packaged Chiller Builder for details. Additional corrosion protection is available. For Novation or round tube/plate fin (RTPF) heat exchangers, see selection guide "Environmental Corrosion Protection" (Publication 04-581061-01).

Chiller Layout Dimensions — English

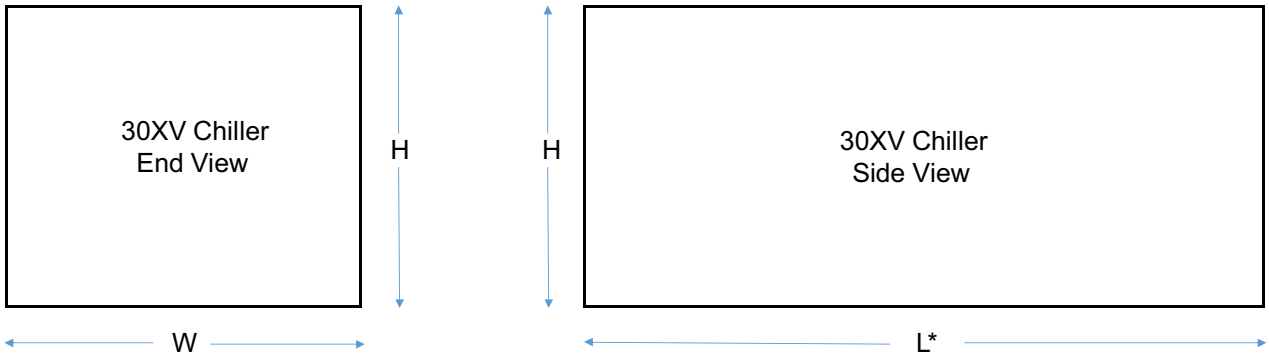

30XV CHILLER SIZE	140			160			180			200		
TIER (MODEL NO. POS. 10)	S	M	H	S	M	H	S	M	H	S	M	H
L (Length) (in.)*	206	206	253	206	253	300	206	253	300	253	300	347
W (width) (in.)	88	88	88	88	88	88	88	88	88	88	88	88
H (Height) (in.)	99	99	99	99	99	99	99	99	99	99	99	99

30XV CHILLER SIZE	225			250			275			300		
TIER (MODEL NO. POS. 10)	S	M	H	S	M	H	S	M	H	S	M	H
L (Length) (in.)*	253	300	347	300	347	394	300	347	394	347	394	441
W (width) (in.)	88	88	88	88	88	88	88	88	88	88	88	88
H (Height) (in.)	99	99	99	99	99	99	99	99	99	99	99	99

30XV CHILLER SIZE	325			350			400			450		
TIER (MODEL NO. POS. 10)	S	M	H	S	M	H	S	M	H	S	M	H
L (Length) (in.)*	394	441	488	406	453	500	453	500	547	500	547	594
W (width) (in.)	88	88	88	88	88	88	88	88	88	88	88	88
H (Height) (in.)	99	99	99	99	99	99	99	99	99	99	99	99

30XV CHILLER SIZE	500	
TIER (MODEL NO. POS. 10)	S	M
L (Length) (in.)*	547	594
W (width) (in.)	88	88
H (Height) (in.)	99	99

* The chiller length shown in the chart does not include a free cooling section. When free cooling is employed, the additional length can be evaluated with the information presented in the Physical Data portion of this publication.

NOTES:

1. The dimensions presented here are intended to determine the suitability of a given chiller for a given space. Detailed dimensions, including chilled-water piping locations/details, contact surface locations, electrical connection locations as well as other relevant data are presented in the Chiller Submittal Drawing Manager, or may be obtained by contacting your Carrier sales representative.
2. When determining the suitability of a given chiller for a space, do not forget to consider the availability of adequate airflow to that location. Airflow guidelines and clearances are presented in the Application Section of this publication.
3. 2-Piece Shipment Modules (40A/B, 45A/B and 50A/B) are not shown in the chart because they combine to become the lengths shown in the chart for 30XV400, 30XV450 and 30XV500 respectively. This relationship is described in the Physical Data section of this publication.

Chiller Layout Dimensions — SI

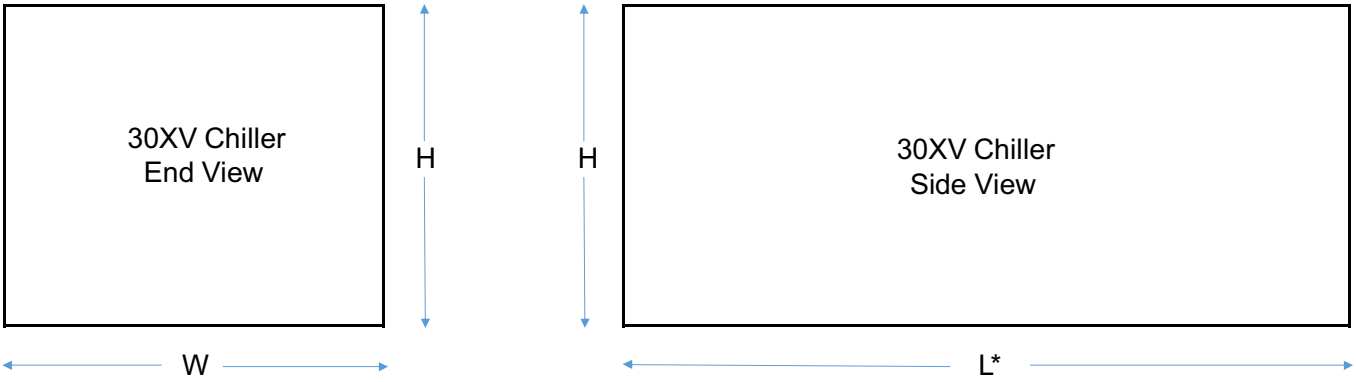

30XV CHILLER SIZE	140			160			180			200		
TIER (MODEL NO. POS. 10)	S	M	H	S	M	H	S	M	H	S	M	H
L (Length) (mm)*	5226	5226	6420	5226	6420	7614	5226	6420	7614	6420	7614	8808
W (width) (mm)	2236	2236	2236	2236	2236	2236	2236	2236	2236	2236	2236	2236
H (Height) (mm)	2513	2513	2513	2513	2513	2513	2513	2513	2513	2513	2513	2513

30XV CHILLER SIZE	225			250			275			300		
TIER (MODEL NO. POS. 10)	S	M	H	S	M	H	S	M	H	S	M	H
L (Length) (mm)*	6420	7614	8808	7614	8808	10002	7614	8808	10002	8808	10002	11196
W (width) (mm)	2236	2236	2236	2236	2236	2236	2236	2236	2236	2236	2236	2236
H (Height) (mm)	2513	2513	2513	2513	2513	2513	2513	2513	2513	2513	2513	2513

30XV CHILLER SIZE	325			350			400			450		
TIER (MODEL NO. POS. 10)	S	M	H	S	M	H	S	M	H	S	M	H
L (Length) (mm)*	10002	11196	12390	10304	11498	12692	11498	12692	13886	12692	13886	15080
W (width) (mm)	2236	2236	2236	2236	2236	2236	2236	2236	2236	2236	2236	2236
H (Height) (mm)	2513	2513	2513	2513	2513	2513	2513	2513	2513	2513	2513	2513

30XV CHILLER SIZE	500	
TIER (MODEL NO. POS. 10)	S	M
L (Length) (mm)*	13886	15080
W (width) (mm)	2236	2236
H (Height) (mm)	2513	2513

* The chiller length shown in the chart does not include a free cooling section. When free cooling is employed, the additional length can be evaluated with the information presented in the Physical Data portion of this publication.

NOTES:

1. The dimensions presented here are intended to determine the suitability of a given chiller for a given space. Detailed dimensions, including chilled-water piping locations/details, contact surface locations, electrical connection locations as well as other relevant data are presented in the Chiller Submittal Drawing Manager, or may be obtained by contacting your Carrier sales representative.
2. When determining the suitability of a given chiller for a space, do not forget to consider the availability of adequate airflow to that location. Airflow guidelines and clearances are presented in the Application Section of this publication.
3. 2-Piece Shipment Modules (40A/B, 45A/B and 50A/B) are not shown in the chart because they combine to become the lengths shown in the chart for 30XV400, 30XV450 and 30XV500 respectively. This relationship is described in the Physical Data Section of this publication.

09FC dimensions

09FC Layout Dimensions

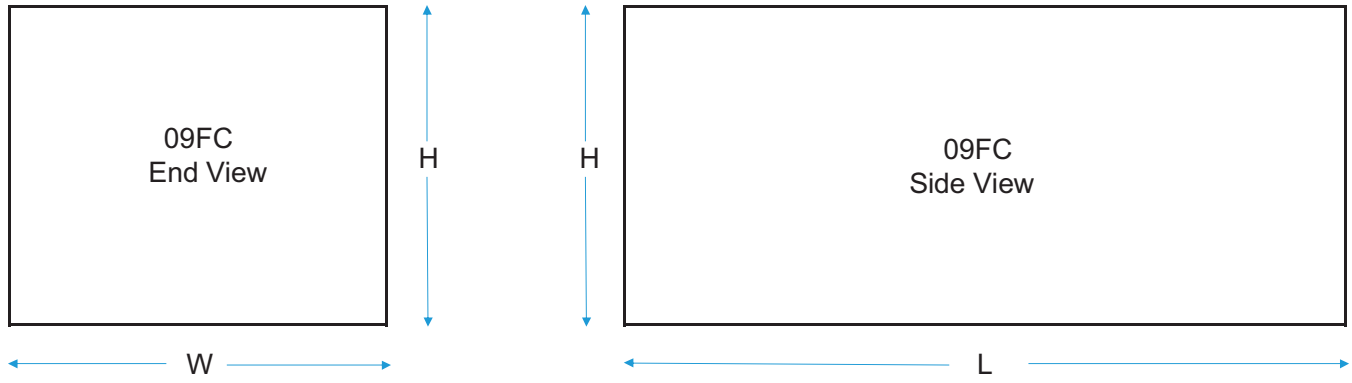

09FC (Free Cooling Section) Overall Dimensions Chart — English

09FC (FREE COOLING) SIZE	020	030	040	050	060	070	080
OVERALL DIMESIONS (in.)							
L (LENGTH)	100	147	194	241	288	335	382
W (WIDTH)	88	88	88	88	88	88	88
H (HEIGHT)	99	99	99	99	99	99	99

09FC (Free Cooling Section) Overall Dimensions Chart — SI

09FC (FREE COOLING) SIZE	020	030	040	050	060	070	080
OVERALL DIMESIONS (mm)							
L (LENGTH)	2535	3729	4923	6117	7311	8505	9699
W (WIDTH)	2236	2236	2236	2236	2236	2236	2236
H (HEIGHT)	2513	2513	2513	2513	2513	2513	2513

NOTES:

1. The dimensions presented here are intended to determine the suitability of a given free cooling module for a given space. Detailed dimensions, including chilled-water piping locations/details, contact surface locations, electrical connection locations as well as other relevant data are presented in the Chiller Submittal Drawing Manger.
2. When determining the suitability of a given free cooling module for a space, do not forget to consider the availability of adequate airflow to the location.

Selection procedure

Carrier's Packaged Chiller Builder Selection Program provides quick, easy selection of Carrier's air-cooled liquid chillers. The program considers specific temperature, fluid and flow requirements among other factors such as fouling and altitude corrections.

Before selecting a chiller, consider the following points:

Leaving water (fluid) temperature (LWT):

- If the LWT is less than 40°F (4.4°C), loop freeze protection to a minimum of 15°F (–9.4°C) below the LWT set point is required.
- If the LWT is less than 40°F (4.4°C), the evaporator for brine application or evaporator for process brine application should be employed.
- If the LWT is greater than 60°F (15.5°C), a mixing loop is required.

Use of glycol in chilled fluid:

- Any time there is a glycol solution in the chilled water loop, the brine evaporator should be considered. This is particularly important in low flow applications.

Entering water (fluid) temperature (EWT):

- If the EWT requirement is greater than 70°F (21.1°C), a mixing loop is required. The EWT should not exceed 70°F (21.1°C) for extended operation. Pulldown can be accomplished from 95°F (35°C).

Evaporator flow rate or evaporator delta-T:

- The evaporator delta-T (EWT – LWT) must fall between 3° and 20°F (1.7° and 11.1°C) while still meeting both the fluid minimum/maximum temperature requirements as well as the fluid minimum/maximum flow requirements.
- For larger or smaller delta-T applications, a mixing loop is required.
- If the evaporator flow is variable, the rate of change of flow should not exceed 10% per minute. A loop volume of greater than 3 gallons per ton (3.2 l/kW) is also recommended.
- For variable primary flow applications, consider the 3-pass evaporator.

Evaporator pressure drop:

- A high evaporator pressure drop can be expected when the evaporator delta-T is low. A mixing loop can help to alleviate this situation.
- Alternatively, consider a reduced pass option when there is a low delta-T.
- A low evaporator pressure drop can be expected when evaporator delta-T is high.

Water quality, fouling factor:

- Poor water quality can increase the required evaporator fouling factor.
- Higher than standard fouling factors lead to lower capacity and higher input kW from a given chiller size compared to running the same application with better quality water (and lower fouling factors).

Operation below 32°F (0°C) ambient temperature:

- Wind baffles or hail guards are required.
- Consider higher loop volumes, 6 to 10 gallons per nominal ton (6.5 to 10.8 l/kW).
- Loop freeze protection with glycol is strongly recommended to a minimum of 15°F (8.3°C) below lowest anticipated ambient temperature.
- Chilled water pump control is strongly recommended; otherwise override capability is required.
- The evaporator for brine application should be employed.
- Consider using free cooling to reduce mechanical cooling load and increase overall system efficiency.

Chiller idle below 32°F (0°C) ambient temperature:

- Loop freeze protection with glycol is strongly recommended to a minimum of 15°F (8.3°C) below lowest anticipated ambient temperature.
- Chilled water pump control is strongly recommended; otherwise override capability is required.
- Drain the evaporator — This will require a small amount of glycol for residual water. If evaporator heaters are installed, the heaters will need to be disconnected.
- Consider using a remote evaporator. Do not bury refrigerant piping.

Ambient temperature:

- Highest allowable ambient air temperature is 125.6°F (52°C) for high tier units. Standard tier units, without the addition of variable speed condenser fans, allow a maximum ambient temperature of 105°F (40.6°C). For maximum allowable ambient temperature values for all configurations, see the High Ambient Temperature Operation section on page 63.
- Although the selection software does not allow selections above 125.6°F (52°C) ambient, the mid and high tier units are operational up to 131°F (55°C).
- Lowest allowable ambient temperature for the standard unit to start and operate is 32°F (0°). With the inclusion of wind baffles (field fabricated and installed), mid and high tier units are capable of starting as low as 5°F (–15°C) and of operating as low as –20°F (–29°C) ambient temperature. To achieve performance at these low temperatures, standard-tier units require variable speed condenser fans.

Operation in sound-sensitive applications:

- Consider selecting the unit using the sound optimization feature.

Cooling capacity requirement:

- Do not oversize the chillers by more than 15% at design conditions.

Selection procedure (cont)

Coil corrosion requirements:

- Coastal application
- Industrial application
- Coastal/industrial application
- Urban application
- Farming

NOTE: See NACO (North American Commercial Operations) Packaged Chiller Builder and appropriate selection guides for more information.

Chilled water reset:

- Return water (standard)
- Outside air temperature (standard)
- Space temperature (accessory sensor required)
- 4 to 20 mA (requires an energy management module)

Demand limit:

- 2-step (requires an energy management module)
- 4 to 20 mA (requires an energy management module)
- CCN Loadshed

Shipping Considerations:

- For high-capacity applications in which it is important that units can be shipped in 45-foot containers, consider the two-piece shipment option for sizes 400H, 450M, 450H, 500S, and 500M. For sizes 325H, 350H, 400M, and 450S, which cannot be shipped in 45-foot containers, consider an alternative selection that can fit in a 45-foot container.

Evaporator Pressure Drop Curves (English)
Standard (2-Pass) Evaporator

30XV140, 160, 180, 200, 225

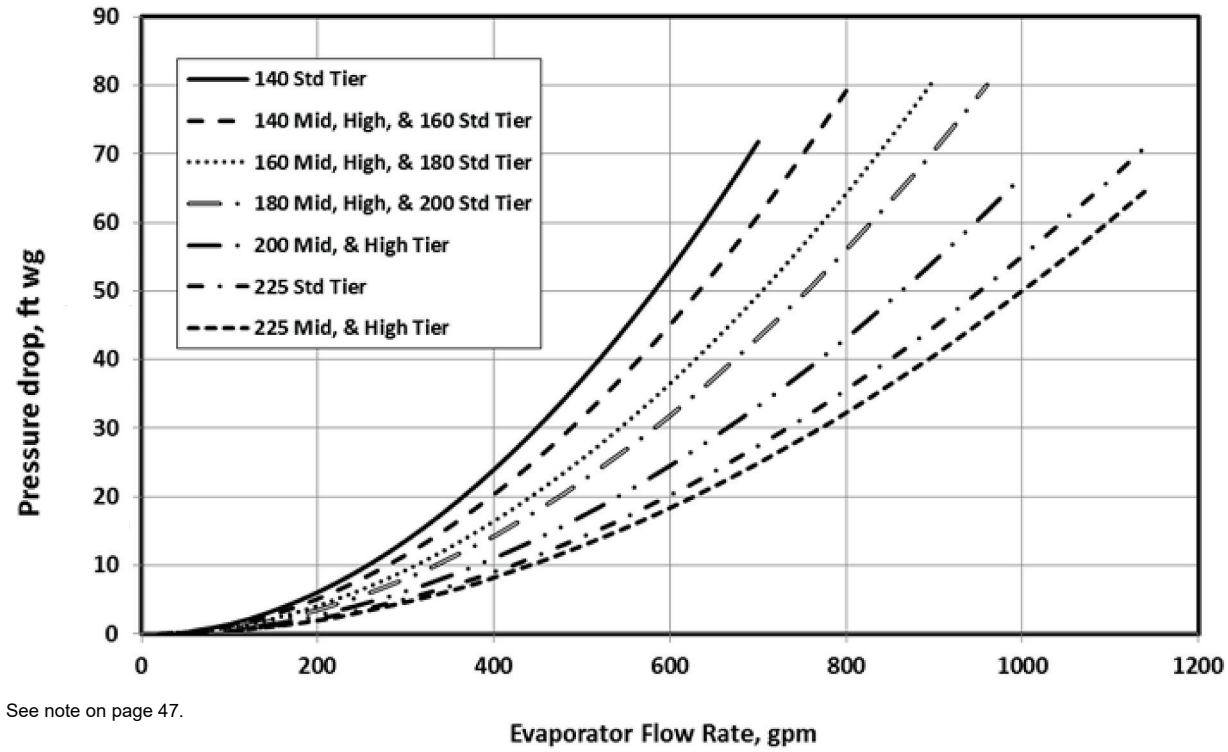

See note on page 47.

30XV250, 275, 300, 325

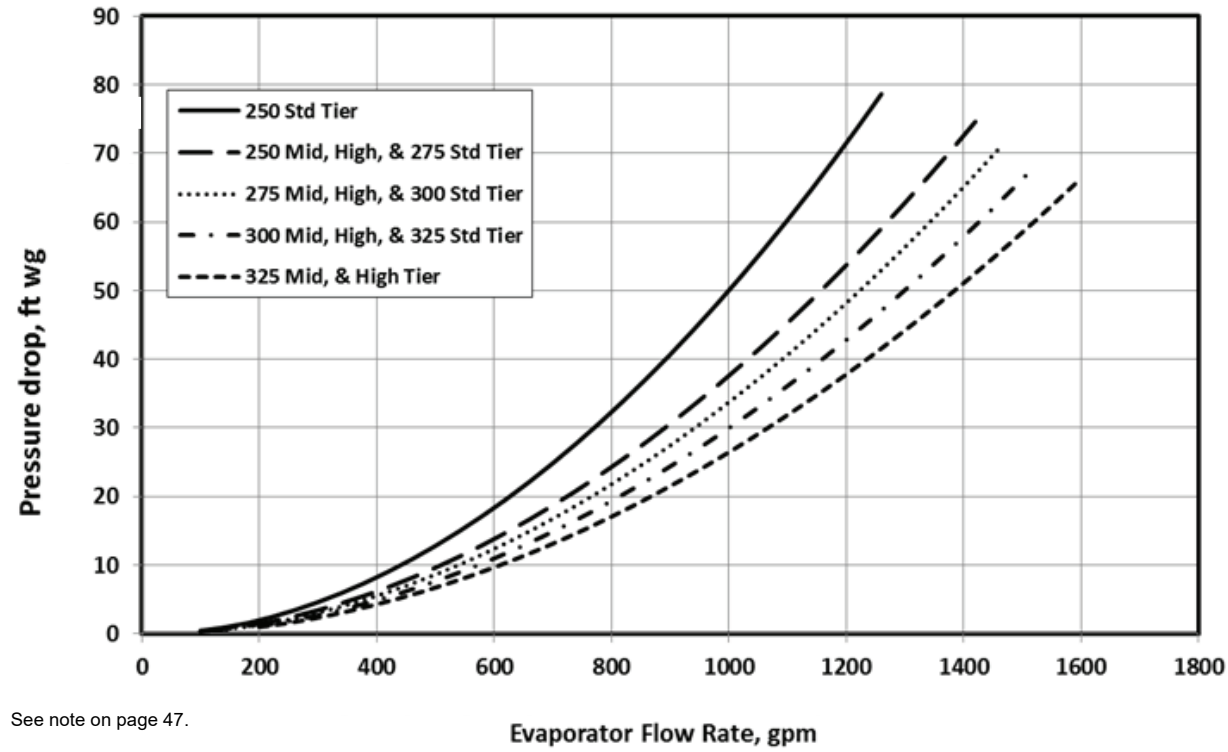

See note on page 47.

Evaporator Pressure Drop Curves (English) (cont)
Standard (2-Pass) Evaporator

30XV350, 400, 450, 500

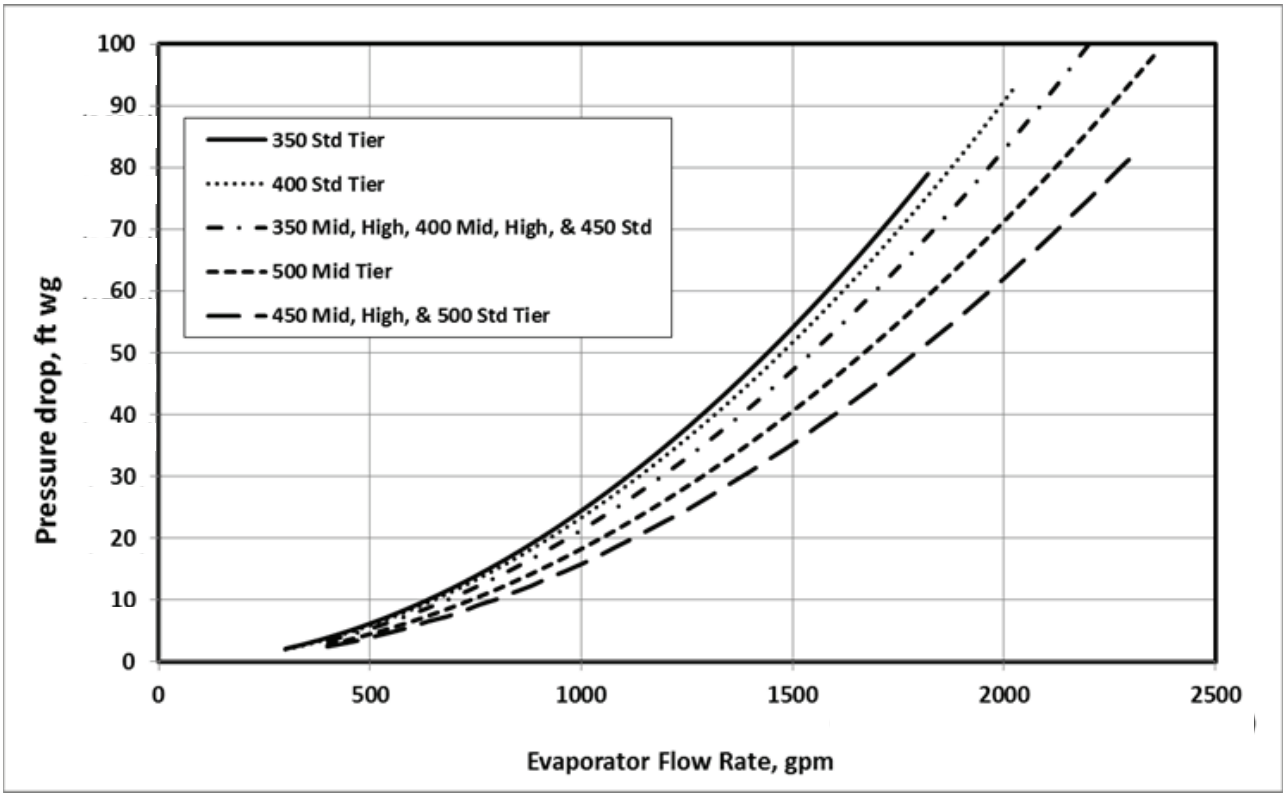

See note on page 47.

Evaporator Pressure Drop Curves (SI)
Standard (2-Pass) Evaporator

30XV140, 160, 180, 200, 225

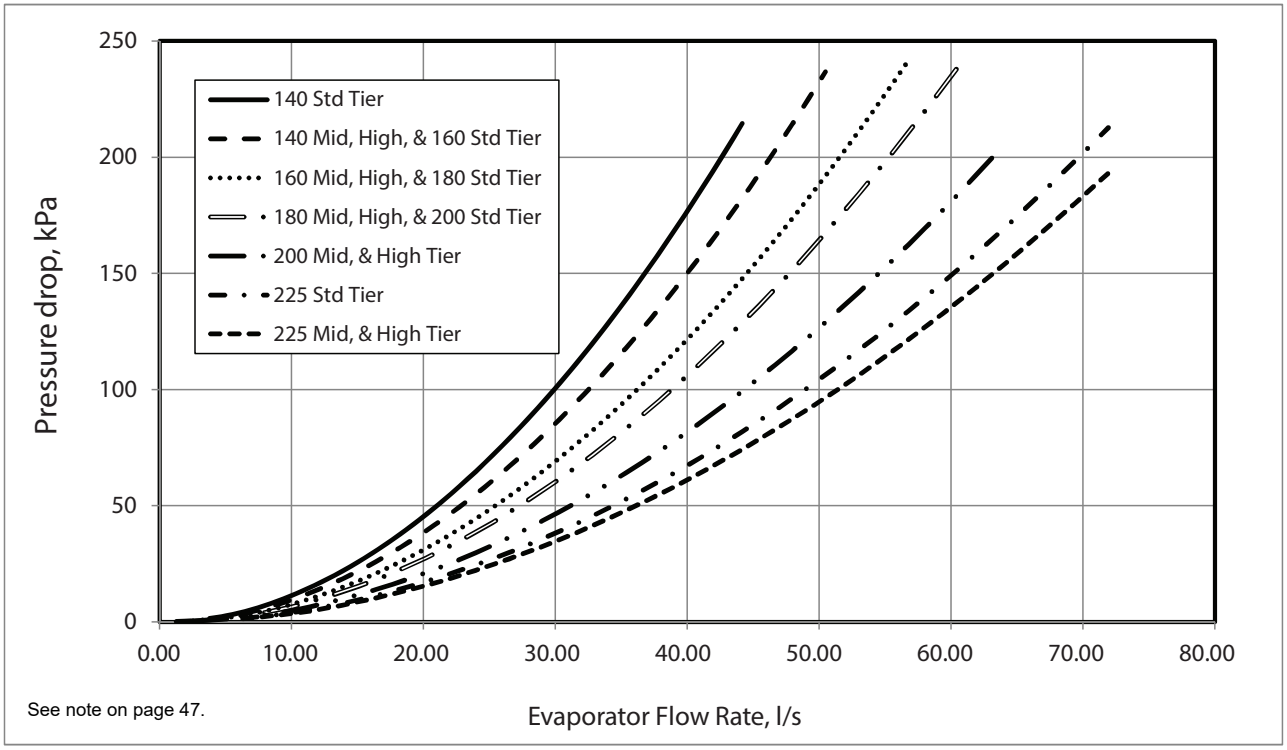

See note on page 47.

30XV250, 275, 300, 325

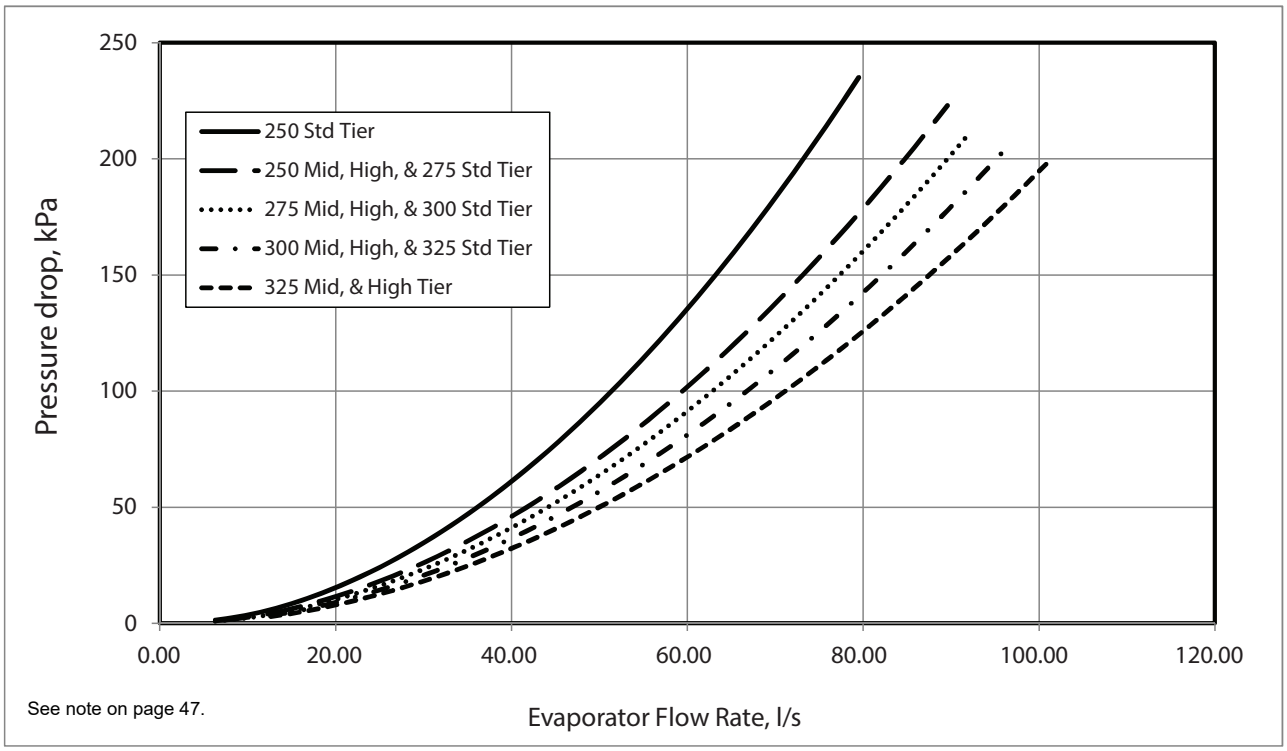

See note on page 47.

Evaporator Pressure Drop Curves (SI) (cont)
Standard (2-Pass) Evaporator

30XV350, 400, 450, 500

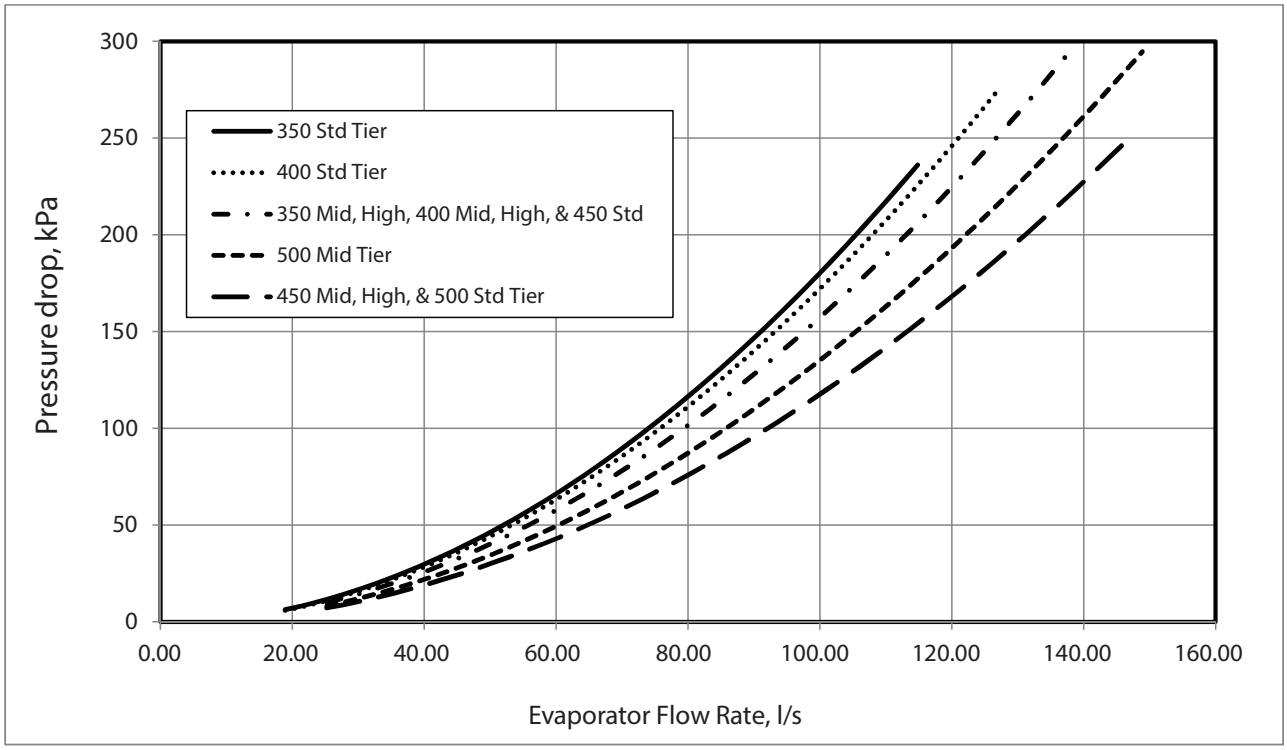

NOTE: The indicated pressure drop is from the inlet to the outlet of the evaporator.

Typical piping and wiring schematic

Typical Diagram for 30XV Units

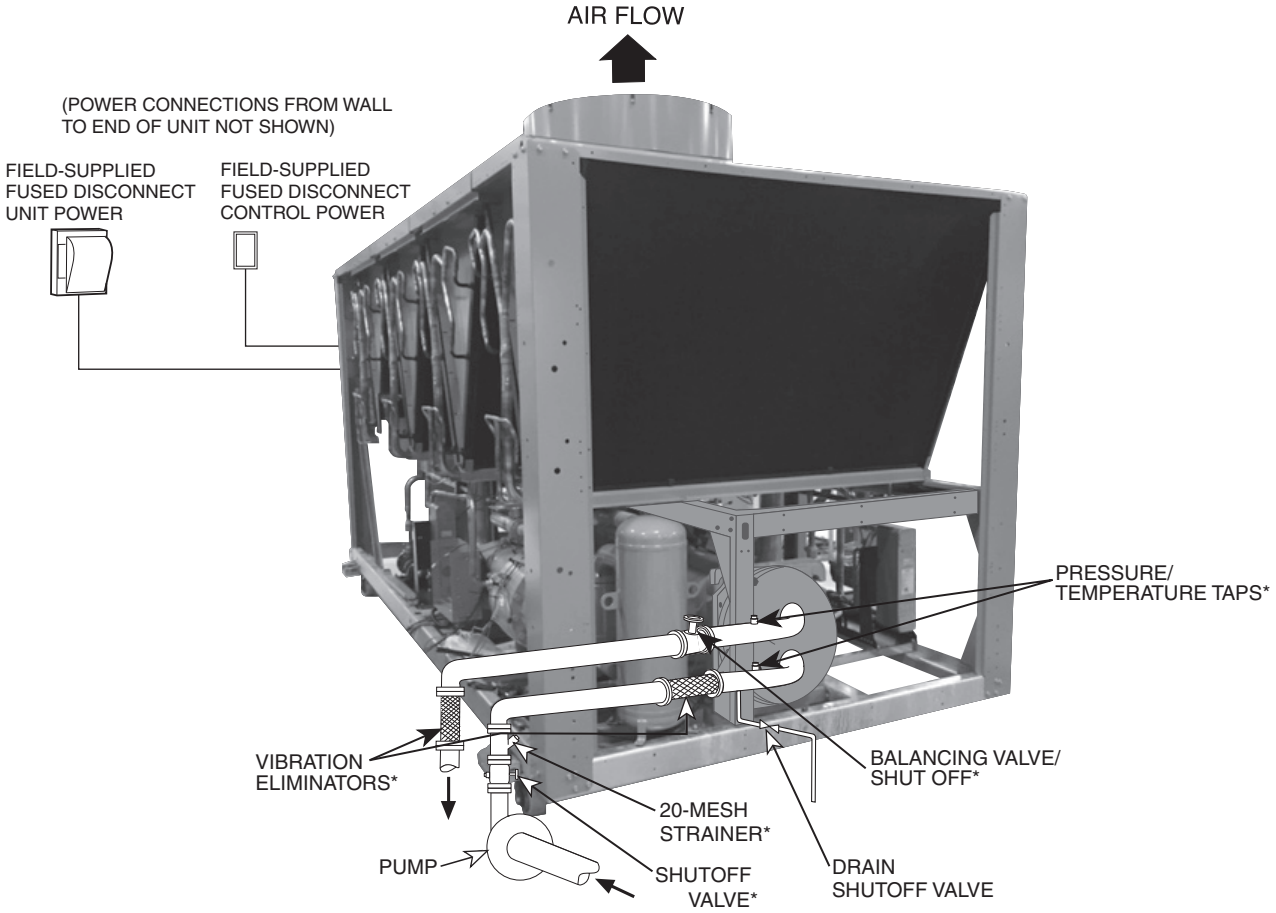

HEAT TAPE AND INSULATION ARE RECOMMENDED ON ALL EXPOSED PIPING IF AMBIENT TEMPERATURE <32°F (0°C) AND NO ANTIFREEZE SOLUTION IS IN SYSTEM.

LEGEND

- Airflow Through Condenser
- Power Wiring
- Chilled Water Piping

*Field-installed.

NOTES:

1. Chiller must be installed level to maintain proper compressor oil return.
2. Piping shown are general points-of-connection guides only and are not intended for a specific installation. Wiring and piping shown are for a quick overview of system and are not in accordance with recognized standards.
3. All wiring must comply with applicable local and national codes.
4. All piping must follow standard piping techniques. Refer to Carrier System Design Manual or appropriate ASHRAE (American Society of Heating, Refrigerating, and Air-Conditioning Engineers) handbook for details.
5. A 20-mesh strainer must be field supplied and installed within 10 ft (3 m) of the evaporator inlet.
6. The standard (2-pass) evaporator is shown.
7. The chiller displayed here does not incorporate a free cooling section.

Typical piping and wiring schematic (cont)

Typical Piping Diagram for 30XV Units

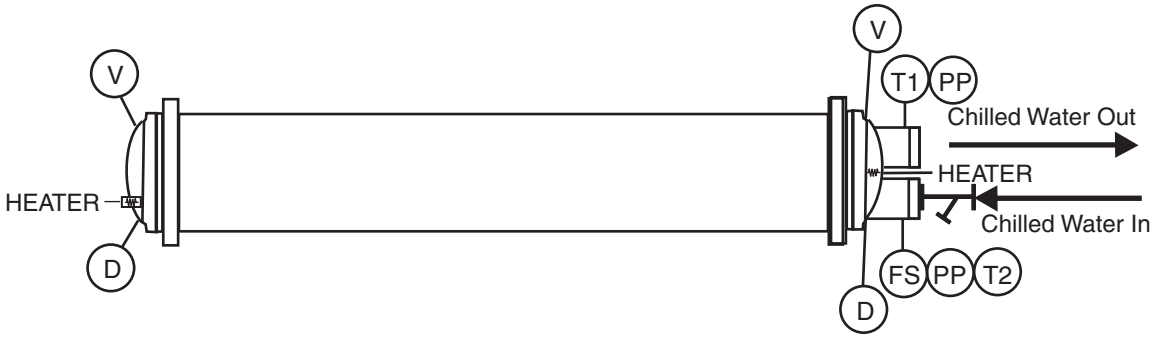

LEGEND

D — Drain, 3/4-in. NPT
FS — Flow Switch
PP — Pipe Plug, 1/4-in. NPT
T1 — Leaving Water Thermistor
T2 — Entering Water Thermistor
V — Vent, 1/4-in. NPT
— 20-Mesh Strainer

Power Entry Options

POWER ENTRY OPTION	30XV UNIT SIZE	VOLTAGE	DISCONNECT OPTION	NO. OF AVAILABLE CONDUCTOR CONNECTIONS PER PHASE*	LUG RANGE
SINGLE POINT POWER	140-200	208/230V	NO	4	#2AWG - 750 KCMIL
		380-575V	NFD	2	2/0 - 500 KCMIL
	140-325	380-575V	NO	2	#2AWG - 600 KCMIL
	225-325	380-440V	NFD	4	4/0 - 500 KCMIL
		460-575V	NFD	3 (or 2)	3/0 - 400 KCMIL or (500 KCMIL - 750 KCMIL)
	350-500	380-440V	NO	6	#2AWG - 750 KCMIL
		460-575V	NO	4	#2AWG - 750 KCMIL
		380-440V	NFD	6	#2AWG - 600 KCMIL
		460-575V	NFD	4	4/0 - 500 KCMIL
DUAL POINT POWER	140-200	208/230V	NO	3	3/0 - 400 KCMIL
		380-575V	NO	1 or (2)	2/0-500 KCMIL or (2/0-250 KCMIL)
		380-575V	NFD	1 or (2)	2/0-500 KCMIL or (2/0-250 KCMIL)
	225-325	380-575V	NO	2	#2AWG - 500 KCMIL
		380-575V	NFD	2	#2AWG - 500 KCMIL
	350-500	380V	NO	4	#2AWG - 750 KCMIL
		460-575V	NO	2	#2AWG - 600 KCMIL
		380-575V (HSCCR)	NO	3	3/0 - 400 KCMIL

LEGEND

AWG — American Wire Gage
HSCCR — High Short Circuit Current Rating
NFD — Non-Fused Disconnect
NO — None

*This is not necessarily the number of conductors that are required. The number and size of the conductors is the responsibility of the engineer of record for the application.

Microprocessor

The Carrier Controller microprocessor controls overall unit operation and controls a number of processes simultaneously. These processes include internal timers, reading inputs, analog to digital conversions, fan control, display control, diagnostic control, output relay control, demand limit, capacity control, head pressure control, and temperature reset. Some processes are updated almost continuously, others every 2 to 3 seconds, and some every 30 seconds. The microprocessor routine is started by switching the Emergency ON-OFF switch to ON position. Pump control of external pumps (where configured) will energize the evaporator pump to the internal (or CCN) time schedule (or input occupied signal from external system).

When the unit receives a call for cooling (based on a deviation from chilled water set point), the unit stages up in capacity to maintain the evaporator fluid set point. The first compressor starts 1 to 3 minutes after the call for cooling. The Carrier Controller microprocessor controls the capacity of the chiller by varying the number of compressors on and each loading capacity to satisfy actual dynamic load conditions. Accuracy depends on loop volume, loop flow rate, load, and outdoor-air temperature. No adjustment for cooling range or evaporator flow rate is required, because the control automatically compensates for cooling range by measuring both return-fluid temperature and leaving-fluid temperature. This is referred to as leaving-fluid temperature control with return-fluid temperature compensation.

The basic logic for determining when to add or remove capacity is a time band integration of deviation from set point plus rate of change of leaving-fluid temperature. When leaving-fluid temperature is close to the set point and slowly moving closer, logic prevents additional capacity. If leaving-fluid temperature is less than 34°F (1.1°C) for water, or 4°F (2.2°C) above the brine freeze set point for brine units, the unit is shut off until the water temperature for brine reaches 34°F (1.1°C) or 4°F (2.2°C) above the set point for brine to protect against freezing.

In pulldown mode, no additional capacity is added if the rate of change of the leaving water temperature is greater than the adjustable setting.

Control sequence

Off cycle

If ambient temperature is below 36°F (2.2°C), evaporator heaters (if installed) are also energized.

Start-up

After control circuit switches on, the prestart process takes place, then microprocessor checks itself and waits for temperature to stabilize. The controlled pulldown feature limits compressor loading on start-up to reduce demand on start-up and unnecessary compressor usage.

Capacity control

On the first call for cooling, the microprocessor starts initial compressor and fan stage on lead circuit.

As additional cooling is required, the capacity of the compressor is increased by increasing the drive frequency. As the load increases above 100% of the first compressor's capacity, another compressor is started and both are staged together to optimize efficiency.

The speed at which capacity is added or reduced is controlled by temperature deviation from set point and rate of temperature change of chilled fluid.

The controls respond to the supply chilled water temperature to cycle the compressors to match cooling load requirements.

Sensors

Thermistors are used to control temperature-sensing inputs to the microprocessor. No additional thermistor sensors are required for optional leaving chilled water temperature, return water, or outdoor air reset.

The following temperature sensors are provided on 30XV units:

- Evaporator leaving chilled fluid temperature (LWT)
- Evaporator entering fluid (return) temperature (EWT)
- Outside-air temperature (OAT)
- Space temperature (optional with EMM board)

Three refrigerant pressure transducers are used in each circuit for sensing suction, discharge, and liquid pressure. The microprocessor uses these inputs to control capacity, fan speed, and valve openings to optimize efficiency.

The following pressure transducers are provided on 30XV units:

- Saturated condensing temperature
- Evaporator saturation temperature
- Oil
- Economizer
- Liquid saturated temperature

Additional information

Detailed information on controls and operation is available in the Controls, Start-Up, Operation, Service, and Troubleshooting guide included with each unit. Packaged Service Training programs are also available. Contact your local Carrier representative for more information.

Carrier Controller microprocessor

Dynamic Carrier Controller microprocessor keeps the chiller online during periods of extreme operating conditions. If the entering fluid temperature is 95°F (35°C) and the saturated suction temperature is 50°F (10°C) or higher the maximum operating pressure (MOP) feature limits the suction to keep the chiller online. The controller automatically starts the chiller in the unloaded state to eliminate the potential of compressor overload due to high head pressure or low suction pressure. The controller will equalize run time on each circuit through the lead/lag feature. If a circuit becomes disabled, the controller will automatically set the active circuit to lead, keeping the chiller online at a reduced capacity.

Low-temperature override

This feature prevents LCWT (leaving chilled water [fluid] temperature) from overshooting the set point and possibly causing a nuisance trip-out by the freeze protection.

High-temperature override

This feature allows the chiller to add capacity quickly during rapid load variations.

Temperature reset

Reset reduces compressor power usage at part load when design LCWT is not necessary. Humidity control should be considered since higher coil temperatures resulting from reset will reduce latent heat capacity. Three reset options are offered, based on the following:

Return-fluid temperature increases LCWT set point as return (or entering) fluid temperature decreases (indicating load decrease). Option may be used in any application where return fluid provides accurate load indication. A limitation of return fluid reset is that LCWT may only be reset to value of design return fluid temperature.

Outdoor-air temperature increases the LCWT as outdoor ambient temperature decreases (indicating load decrease). This reset should be applied only where outdoor ambient temperature is an accurate indication of load.

Space temperature increases the LCWT as space temperature decreases (indicating load decrease). This reset should be applied only where space temperature is an accurate indication of load. An accessory space temperature thermistor is required.

The energy management module is required for 4 to 20 mA signal temperature reset for outdoor-air temperature or space temperature. Return fluid temperature does not require this module.

For details on applying a reset option, refer to the Controls, Start-Up, Operation, Service and Troubleshooting literature shipped with the unit. Obtain ordering part numbers for reset option from the Packaged Chiller Builder program or contact your local Carrier representative.

Safety

Abnormal conditions

All control safeties in the chiller operate through the VFD (variable frequency drive) and the microprocessor. For safeties, the VFD and microprocessor make appropriate decision to shut down a compressor due to a safety trip or bad sensor reading and display appropriate failure code on the display. Chiller holds in safety mode until reset; it then reverts to normal control when unit is reset.

Low-pressure safety

Safety cuts out if system pressure drops below minimum.

High-pressure cutout

Switch shuts down compressors if compressor discharge pressure increases to 290.3 psig (2001.5 kPa).

Compressor anti-cycling

This feature limits compressor cycling.

Loss of flow protection

Proof of flow switches are standard and installed on all 30XV chillers.

Sensor failures

Failures are detected by the microprocessor.

Accessory controls

Demand can be limited by controlling the chiller capacity through the demand limit control (the energy management module is required for this function). This FIOP/accessory interfaces with the microprocessor to control the unit so that the chiller's kW demand does not exceed its setting. It is activated from an external switch or a 4 to 20 mA signal.

The standard Carrier Controller microprocessor is programmed to accept various accessory temperature reset options (based on outdoor-air temperature [standard], return-fluid temperature [standard], or space temperature [which requires accessory thermistor]), that resets the LCWT. The energy management module (EMM) is only required for temperature reset that is initiated by a 4 to 20 mA signal.

Demand limit

If the demand limit is applied, it limits the total power draw of unit to a selected point by controlling the number of operational compressors during periods of peak electrical demand.

The energy management module is required for either 2-step or 4 to 20 mA demand limit.

Electronic expansion valve (EXV)

The EXV controls refrigerant flow to the evaporator for different operating conditions by varying an orifice size to increase or decrease the flow area through the valve based on microprocessor input. The orifice is positioned by a stepper motor through approximately 3,600 discrete steps and is monitored every 3 seconds.

Diagnostics

The microprocessor may be put through a service test (see Controls, Start-Up, Operation, Service, and Troubleshooting literature). Service test confirms microprocessor is functional, informs observer through display the condition of each sensor and switch in chiller, and allows observer to check for proper operation of fans and compressors.

Default settings

To facilitate quick start-ups, 30XV chillers employing the Carrier Controller microprocessor are pre-configured with a default setting that assumes stand-alone operation supplying 44°F (6.6°C) chilled water.

Configuration settings will be based on any options or accessories included with the unit at the time of manufacturing.

Date and time are set to U.S.A. Eastern Time zone and will need reconfiguring based on location and local time zone. If operation based on occupancy scheduling is desired, schedule must be set during installation.

Free cooling

When the chiller is provided with free-cooling (waterside economizer), the chiller controller will be responsible to handle the operation of the waterside economizer. Although the free cooling section does contain a control panel, its operation is dependent on the chiller controller and it does not require any action from the end user in order to operate (turn on/shut down) the waterside economizer.

Typical Control and Power Wiring

LEGEND

ALM — ALARM
ALT — ALERT
PMP — CHILLED WATER PUMP
NEC — NATIONAL ELECTRIC CODE
R — RELAY
TB — TERMINAL BLOCK

NOTES:

1. FACTORY WIRING IS IN ACCORDANCE WITH UL 1995 STANDARDS. FIELD MODIFICATIONS OR ADDITIONS MUST BE IN COMPLIANCE WITH ALL APPLICABLE CODES.
2. WIRING FOR MAIN FIELD SUPPLY MUST BE RATED 75C MINIMUM. USE COPPER FOR ALL UNITS.
3. TERMINALS 9 AND 10 OF TB5 ARE FOR FIELD EXTERNAL CONNECTIONS FOR REMOTE ON-OFF. THE CONTACTS MUST BE RATED FOR DRY CIRCUIT APPLICATION CAPABLE OF HANDLING A 24VAC LOAD UP TO 50 MA.
4. TERMINALS 11 AND 23 OF TB5 ARE FOR CONTROL OF CHILLED WATER PUMP 1 (PMP 1) STARTER. TERMINALS 15 AND 22 OF TB5 ARE FOR CONTROL OF CHILLED WATER PUMP 2 (PMP 2) STARTER. THE MAXIMUM LOAD ALLOWED FOR THE CHILLED WATER PUMP RELAY IS 5 VA SEALED, 10 VA INRUSH AT 24 V. FIELD POWER SUPPLY IS NOT REQUIRED.
5. TERMINALS 12 AND 21 OF TB5 ARE FOR A ALARM RELAY. THE MAXIMUM LOAD ALLOWED FOR THE ALARM RELAY IS 10 VA SEALED, 25 VA INRUSH AT 24V. FIELD POWER SUPPLY IS NOT REQUIRED.
6. MAKE APPROPRIATE CONNECTIONS TO TB6 AS SHOWN FOR ENERGY MANAGEMENT BOARD OPTIONS. THE CONTACTS FOR OCCUPANCY OVERRIDE, DEMAND LIMIT AND ICE DONE OPTIONS MUST BE RATED FOR DRY CIRCUIT APPLICATION CAPABLE OF HANDLING A 24VAC LOAD UP TO 50 MA.
7. TERMINAL BLOCKS, TB5 & TB6 ARE LOCATED IN THE LOW VOLTAGE SECTION OF POWERBOX FOR ALL UNITS. REFER TO CERTIFIED DIMENSIONAL DRAWING FOR EACH UNIT TO GET THE EXACT LOCATIONS.
8. REFER TO CERTIFIED DIMENSIONAL DRAWINGS FOR EXACT LOCATIONS OF THE MAIN POWER AND CONTROL POWER ENTRANCE LOCATIONS.
9. TERMINALS 18 & 26 OF TB6 ARE FOR ALERT RELAY AND TERMINALS 20 & 26 OF TB6 ARE FOR SHUTDOWN RELAY. THE MAXIMUM LOAD ALLOWED FOR THE ALERT AND SHUTDOWN RELAY IS 10 VA SEALED, 25 VA INRUSH AT 24V. FIELD POWER SUPPLY IS NOT REQUIRED.

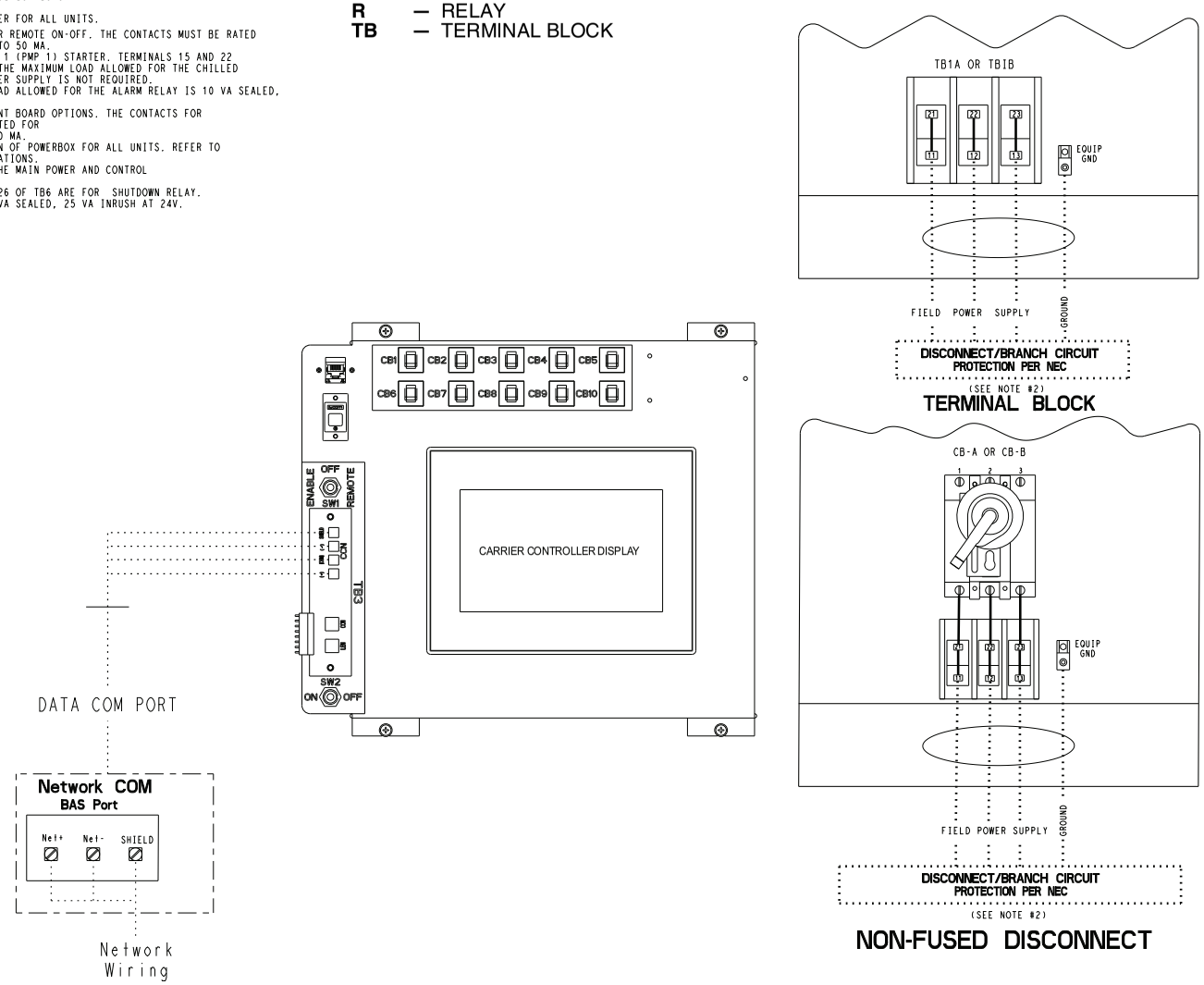

Typical Control and Power Wiring for Free Cooling (Only Applicable When Free Cooling is selected)

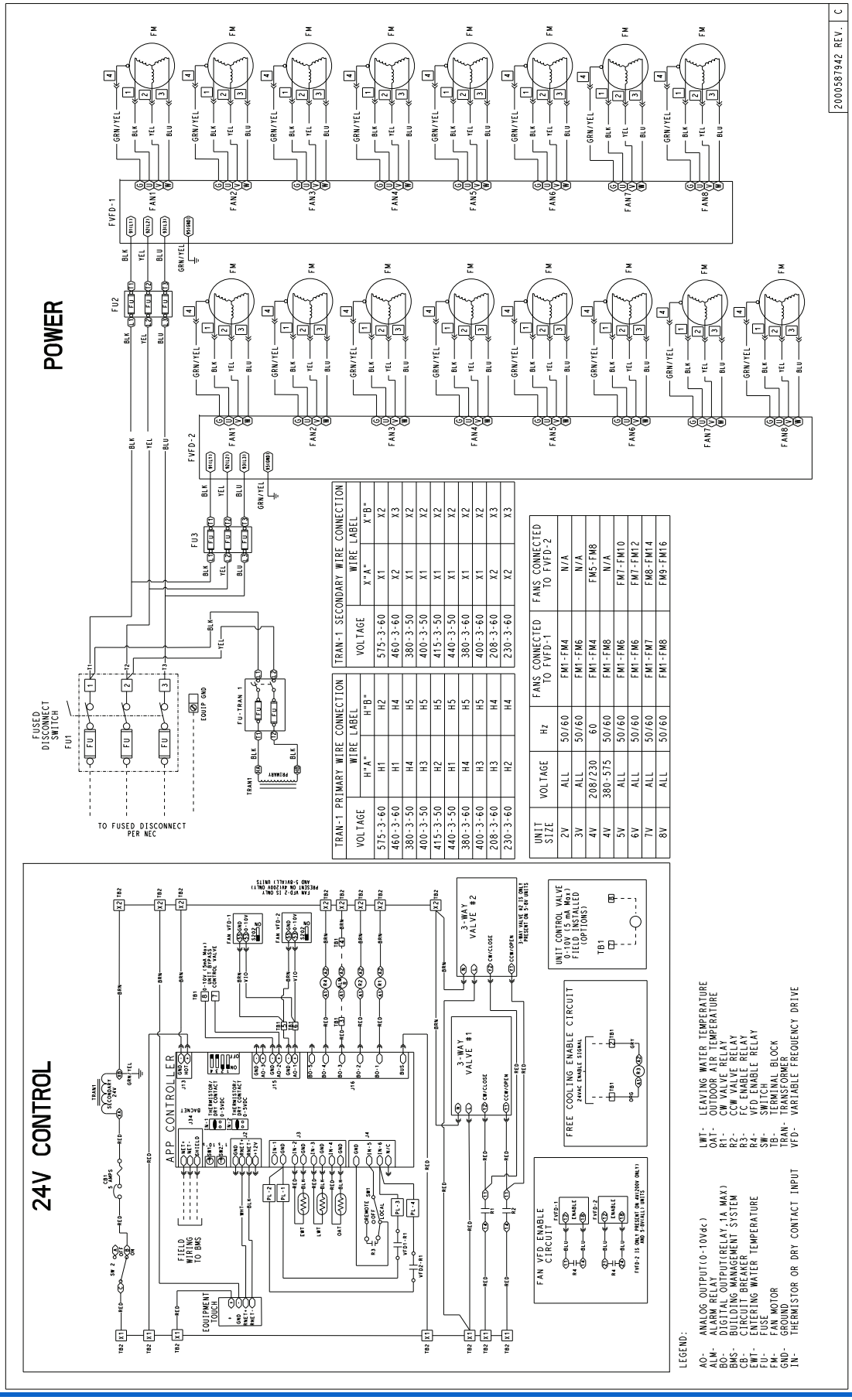

TRAN-1 PRIMARY WIRE CONNECTION		
VOLTAGE	WIRE LABEL "A"	WIRE LABEL "B"
575-3-60	H1	H2
460-3-60	H1	H4
380-3-50	H4	H5
400-3-50	H3	H5
415-3-50	H2	H5
440-3-50	H1	H5
380-3-60	H4	H5
400-3-60	H3	H5
208-3-60	H3	H4
230-3-60	H2	H4

TRAN-1 SECONDARY WIRE CONNECTION		
VOLTAGE	WIRE LABEL X"A"	WIRE LABEL X"B"
575-3-60	X1	X2
460-3-60	X2	X3
380-3-50	X1	X2
400-3-50	X1	X2
415-3-50	X1	X2
440-3-50	X1	X2
380-3-60	X1	X2
400-3-60	X1	X2
208-3-60	X2	X3
230-3-60	X2	X3

UNIT SIZE	VOLTAGE	Hz	FANS CONNECTED TO FVFD-1	FANS CONNECTED TO FVFD-2
2V	ALL	50/60	FM1-FM4	N/A
3V	ALL	50/60	FM1-FM6	N/A
4V	208/230	60	FM1-FM4	FM5-FM8
4V	380-575	50/60	FM1-FM8	N/A
5V	ALL	50/60	FM1-FM6	FM7-FM10
6V	ALL	50/60	FM1-FM6	FM7-FM12
7V	ALL	50/60	FM1-FM7	FM8-FM14
8V	ALL	50/60	FM1-FM8	FM9-FM16

Typical Control and Power Wiring for Free Cooling (Only Applicable When Free Cooling is selected)

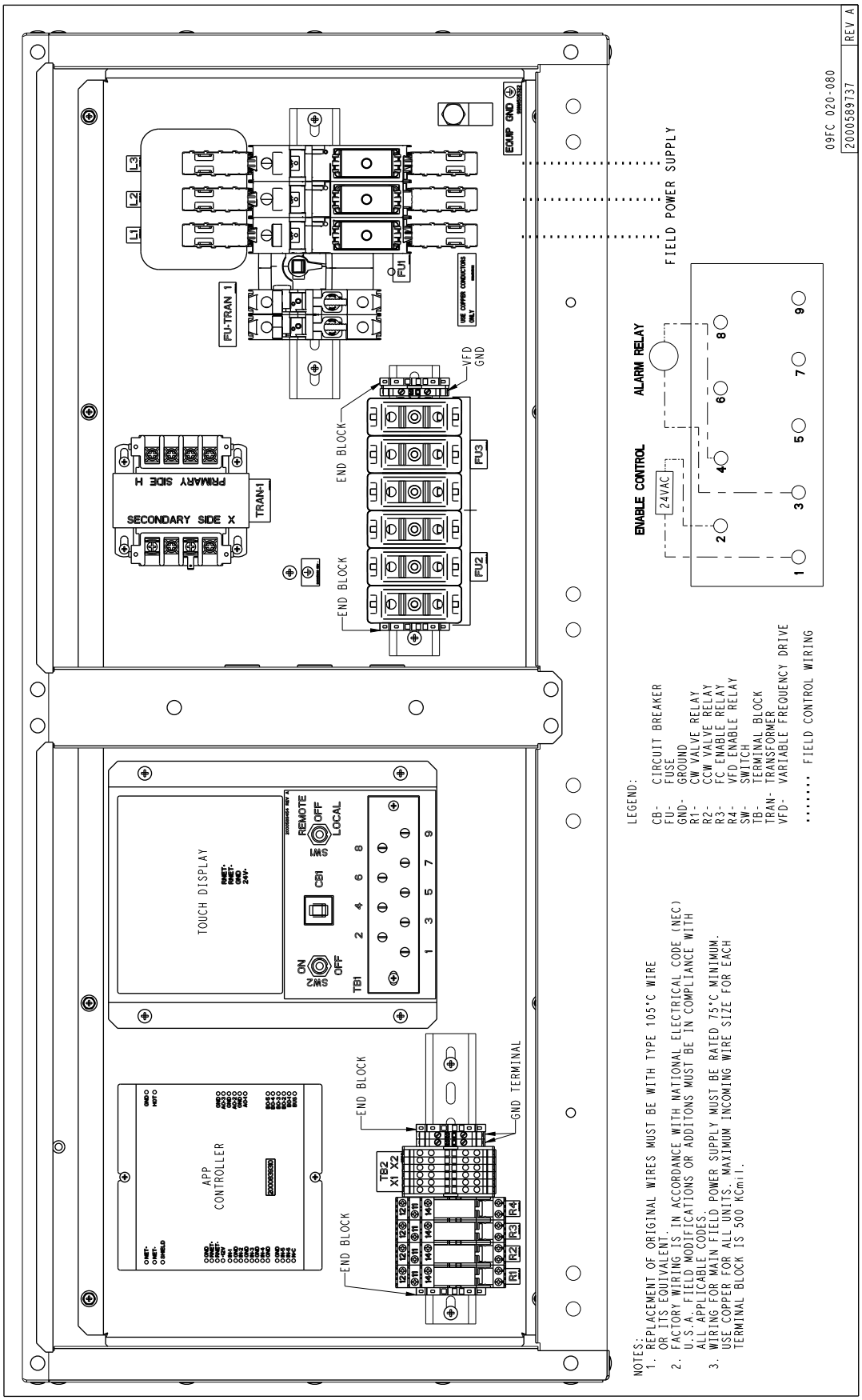

Typical Control and Power Wiring for Free Cooling (Only Applicable When Free Cooling is Selected) (cont)

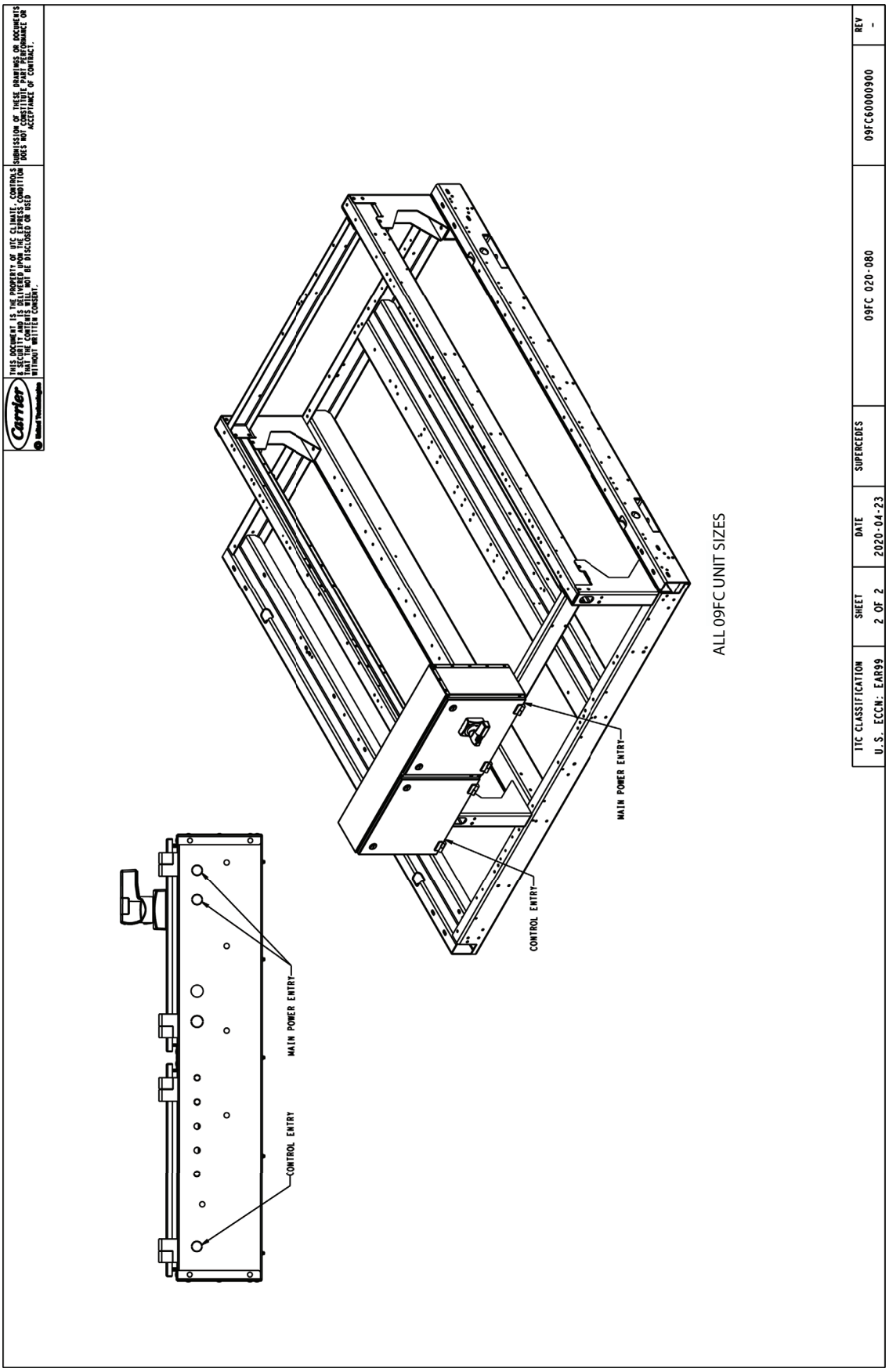

Chiller location and clearances

The 30XV with Greenspeed® intelligence unit must be installed outdoors.

Do not locate near sound-sensitive areas without proper acoustic consideration. For applications requiring mounting a chiller on a building rooftop, consideration should be given to using rubber-in-shear or spring isolators to minimize structure-borne transmission. Unit must be level when installed to ensure proper oil return to the compressors. Clearances must be provided around chillers for airflow, service and local code requirements. See dimensional drawings for specific unit clearance requirements. Ensure adequate clearance between adjacent chillers is maintained. A minimum of 10 ft (3.0 m) is recommended. Chiller fan discharge is strongly recommended to be at least as high as adjacent solid walls. Installation in pits is not recommended.

Minimum clearances

The recommended minimum clearance to ensure proper airflow through the condenser coils and to allow fan maintenance is as shown below.

Recommended Minimum Clearances

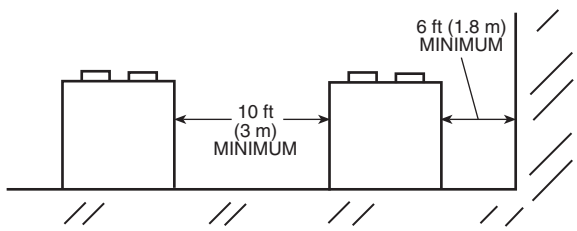

ALIGNED SIDE BY SIDE

Acceptable clearance on the evaporator connection side or end opposite the control box of the unit can be reduced to 3 ft (1 m) without sacrificing performance as long as the remaining three sides are unrestricted. Acceptable clearance on the side with a control box can be reduced to 4 ft (1.3 m) due to NEC (National Electric Code, U.S.A.) regulations, without sacrificing performance as long as the remaining three sides are unrestricted. Clearance between chillers in dual chiller applications may be reduced to 6 ft (1.8 m) without sacrificing performance provided the remaining sides are unrestricted.

There are applications, however, in which recommended minimum clearances are not available. In these situations, customers request a prediction of the chiller performance within the confined space. A generalized derating factor may be insufficient to fully predict performance with various real-life physical layouts and ambient conditions.

To improve performance predictions when recommended clearances cannot be met, Carrier has developed the ExpertFit™ Software Model. An interface in the computerized chiller selection program predicts air-cooled chiller performance within a confined space, taking into account various spatial constraints and conditions, thus providing actual performance reports and not just derate guidelines.

Using this tool will provide the customer with a realistic expectation for their actual installation. The illustration below is an example of a typical installation that the software can model.

ExpertFit™ Model Example

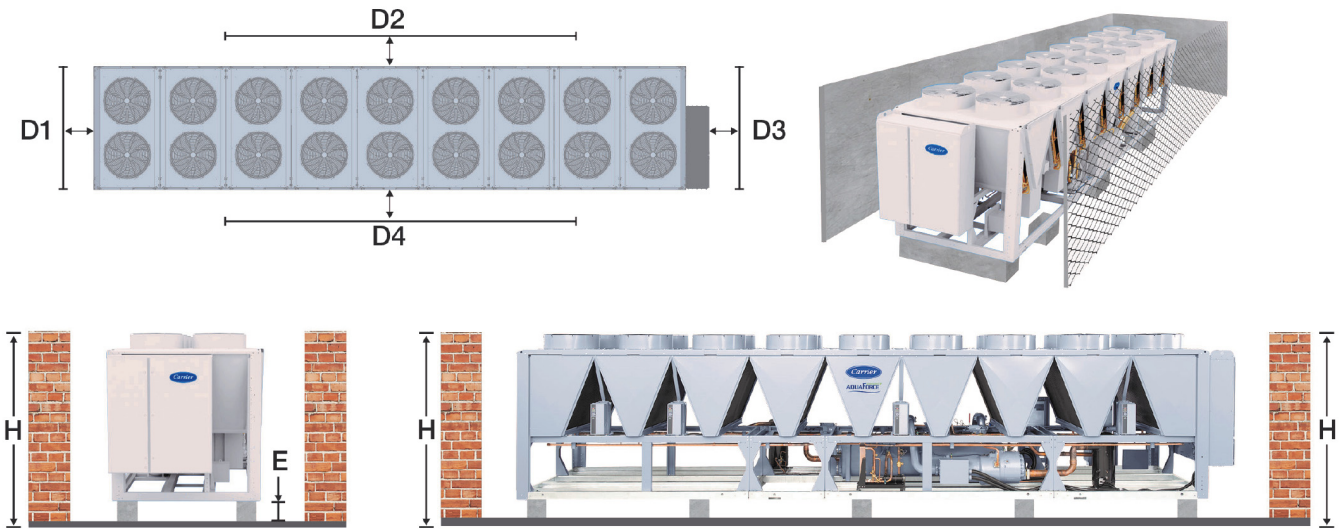

Std/mid/high-tier selection

To best meet customer needs, Carrier provides a tiered approach for 30XV chillers. Standard-tier units provide the smallest footprint for a given capacity while providing competitive efficiency which can fully meet ASHRAE 90.1-2016 requirements. High-tier units, while providing a larger footprint, are capable of producing best-in-class efficiency. Mid-tier units fall in between the standard and high tier in terms of both footprint and efficiency.

But often there are considerations beyond unit size and efficiency. Ambient temperature, and its effect on unit performance, can be one such factor. The ability to cope with high-lift conditions (high ambient temperatures) is very critical in many locations. Mid-tier and high-tier units are better able to deal with high ambient temperatures in terms of both capacity and unit efficiency.

Just as high ambient temperatures are a major consideration for some applications, the ability to operate at low ambient temperatures is often a significant consideration. The mid-tier, high-tier, all 575 v units, and all 50 Hz units are automatically provided with variable speed condenser fans (with the option for ECM fans in all but 575-v units). With the inclusion of wind baffles or hail guards, all units provided with variable speed condenser fans (or the ECM fan option) can operate down to –20°F (–29°C) ambient temperature, and there is no need to select any type of low ambient head pressure control when such fans are employed. It is important to understand that standard-tier units, while provided with fixed speed fans as standard, also have the option of variable speed condenser fans (or ECM fans), thus also being capable of low-ambient operation.

Part-load efficiency is a major consideration for many applications. As already mentioned, mid-tier, high-tier, all 575 v units, and 50 Hz units are provided with variable speed condenser fans (with the option for ECM fans), and these fans are on option on 60 Hz standard-tier units. Other than the low-ambient capability that goes along with variable speed condenser fans or ECM fans, the major advantage of using any type of fans which runs at variable speed is the resulting increase in efficiency in part-load operation (better IPLV (Integrated part load value), for example).

In addition to the items discussed above, the unit may become even more efficient with the usage of PM compressor motors. This option is described in the following section.

ECM fans and PM compressor motors (providing tiers within tiers)

Both fan motor efficiency and compressor motor efficiency may be improved by employing certain factory options. Specifically, fan motor efficiency can be improved by using ECM (electronically commutated motor) fans and compressor motor efficiency can be improved with the use of PM (permanent magnet) motors. The use of these options effectively increases the number of available tiers compared to using standard fans and standard compressor motors.

The use of ECM fans and PM compressor motors can result in 2 types of best-in class efficiency. First, there is best-in-class efficiency in a given footprint with the standard-tier configuration. Also, overall best-in-class chiller efficiency may be achieved when these factory options are employed along with the high-tier chillers.

Customers have many considerations when it comes to choosing an air-cooled chiller for a given application. Between full and part-load efficiency, footprint, unit sound and ambient temperature considerations, the Carrier multi-tiered approach offers a chiller to meet customer needs.

Two-piece shipment

In some circumstances it may be important for units which are longer than 45 feet to be sized for shipment such that they can fit into 45-foot containers. To assist in resolving this issue, some units which are longer than 45 feet can be built in a manner that separates the unit into 2 modules, so each module can fit into a 45-foot container. Models which can be shipped in 2 sections include the 400H, 450M, 450H, 500S and 500M.

When the units arrive at the jobsite, they are combined to essentially become the same as the 400, 450 or 500 size models. Specifically, the modules combine as shown in the following table:

Two-Piece Shipment

MODEL SIZE	SHIPPED MODULES	RESULTING UNIT SIZE
40A	40A, 40B	400
45A	45A, 45B	450
50A	50A, 50B	500

In this literature, some information specifically relates to individual shipping modules, but most relevant information associated with these 2-piece shipment units will be the data associated with the resulting unit size. An example of how to navigate this literature to cover the various aspects of 2-piece shipment units is presented here:

Example: Customer wants the size and performance of a 450M with 400-3-50 voltage, but needs the unit shipped in 45-foot containers:

Because this is a mid-tier unit that needs to be shipped in 45-foot containers, start by selecting a 45A unit. This unit will ship as a 45A module (having a nameplate of 30XV-45A9M*******) and a 45B module (having a nameplate of 30XV-45B9M*******). The physical data specifically associated with these two-piece shipping modules is shown on pages 17 and 18 of this publication. The drawing of the combined unit (while also indicating the contribution of each module) can be seen at the end of the "Dimensions" section of this publication.

All other information associated with the 45A unit can be found by simply examining the information for the 450M, since the unit, for all practical purposes, is a 30XV-4509M******* once it is assembled and operating.

Strainers

A field-supplied screen strainer with a minimum screen size of 20 mesh must be installed a maximum of 10 ft (3 m) from the unit to prevent debris from damaging internal tubes of the evaporator.

Strainer Requirements

APPLICATION	30XV WITH GREENSPEED INTELLIGENCE (ANY HEAT EXCHANGER TYPE)
	Type of Strainer
Closed Loop	20 Mesh*
Open Loop	20 Mesh*

* No strainers are supplied with the units. A 20-mesh strainer must be field supplied and installed within 10 ft (3 m) of the evaporator inlet.

Oversizing chillers

Oversizing chillers by more than 15% at design conditions must be avoided as the system operating efficiency is adversely affected (resulting in greater or excessive electrical demand). When future expansion of equipment is anticipated, install a single chiller to meet present load requirements and add a second chiller to meet the additional load demand. It is also recommended that 2 smaller chillers be installed where operation at minimum load is critical. The operation of a smaller chiller loaded to a greater percentage over minimum is preferred to operating a single chiller at or near its minimum recommended value.

Evaporator water temperature

1. Maximum leaving chilled water temperature (LCWT) for the unit employing the standard evaporator is 60°F (15.5°C). Unit can start and pull down with up to 95°F (35°C) entering-water temperature. The entering-water temperature must not exceed 70°F (21.1°C). See the Operating Limits Table in the Application Data section.
2. Minimum LCWT is 40°F (4.4°C). For leaving-water temperatures between 39.9°F (4.4°C) and 10°F (–12.2°C) an inhibited antifreeze solution is required.

Evaporator flow/range

The 30XV chillers may be operated with a wide range of temperature rise, providing flow limits are not exceeded and corrections to system guidelines are made. For minimum and maximum evaporator flow rates, see the Operating Limits tables on page 61. A high flow rate is generally limited by the maximum pressure drop that can be tolerated by the unit. The 30XV chillers are designed for a full load temperature rise of 3° to 20°F (1.7° to 11.1°C).

Minimum evaporator flow (maximum evaporator temperature rise)

The minimum evaporator flow for all units is shown in the Operating Limits tables on page 61. When system design conditions require a lower flow (or higher rise) than the minimum allowable evaporator flow, follow the recommendations below.

a. Multiple smaller chillers may be applied in series, each providing a portion of the design temperature rise.
b. Evaporator fluid may be recirculated to raise the flow rate to the chiller. The mixed temperature entering the evaporator must be maintained to a minimum of at least 3°F (1.7°C) above the LCWT and a maximum of no more than 20°F (11.1°C) above the LCWT.

NOTE: Recirculation flow is shown below.

Recirculation Flow

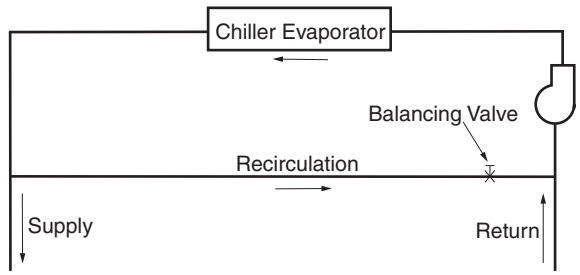

Maximum evaporator flow

The maximum evaporator flow (approximately 3°F [1.7°C] rise) results in a practical maximum pressure drop through evaporator.

Return fluid may bypass the evaporator to keep the pressure drop through the evaporator within acceptable limits. This permits a higher delta T with lower fluid flow through evaporator and mixing after the evaporator.

NOTE: Bypass flow is shown below.

Bypass Flow

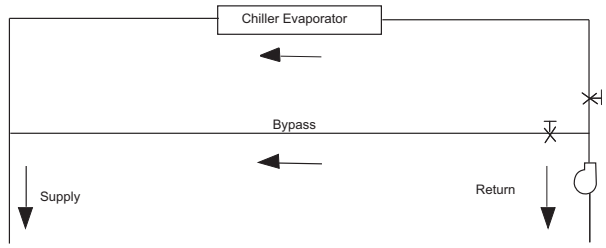

Variable evaporator flow rates

Variable flow rates may be applied to a standard chiller. The unit will, however, attempt to maintain a constant leaving chilled water temperature. In such cases, the minimum flow must be in excess of the minimum flow given in the Operating Limits chart, adjusted for any glycol in the system, and the minimum fluid volume must be in excess of 3 gallons per ton (3.2 L per kW). The flow rate must change at a rate less than 10% per minute. Apply a minimum of 6 gallons per ton (6.5 L per kW) water loop volume if the flow rate changes more rapidly.

Traditional pumping systems incorporate constant-speed drives and waste energy by relying upon throttling valves as the only means to control flow. A more energy-efficient approach to this issue is to use a variable-speed drive.

The major cost of a pump over its lifetime will be energy consumption and maintenance, and both of these factors will be reduced using variable-speed pumping. Energy is saved by the combination of lowering the pump speed in conjunction with the resulting lowering of pumping system resistance when conditions permit.

A typical example of a chiller operating with a variable-speed pumping system would be the case when the user requires the chiller to operate with a constant fluid temperature difference as the load is reduced. This can be accomplished with the understanding that the flow must never go below the minimum allowable value (see "Minimum evaporator flow (maximum evaporator temperature rise)" on page 59). Once that limit is reached, the flow cannot be further reduced. To accomplish this purpose, the minimum speed of the drive should be set based upon the chiller size that is being employed.

As a specific example, let us say the schedule calls for a 200-ton, fresh-water chiller, a 30XV200H with the standard evaporator is selected and it is desired to have a constant 10-degree temperature difference in part load operation (say 54° to 44°F). The schedule calls for 480 gpm at full load based upon the desired capacity and the fluid temperature difference. A constant temperature difference in part load operation is essentially the same as providing flow in direct proportion to chiller load. In the present example, this means that 100% load will run at the

scheduled 480 gpm, 90% load will be 432 gpm, etc. down to the minimum allowable flow for this unit size, which, in the case of a 30XV200H (at standard evaporator pass), is 229 gpm. The chiller in this example will therefore be able to run down to approximately 48% load while basically maintaining a constant 10 degree fluid temperature difference, and then the flow will be held constant for all lower loads. Throughout the range in which flow is reduced (down to minimum allowable flow), the pump speed is proportionally reduced, resulting in pump energy savings.

Fluid loop volume

The volume in circulation must equal or exceed 3 gal. per nominal ton (3.2 l/kW) of cooling for temperature stability and accuracy in normal air-conditioning applications. In process cooling applications, or for operation at ambient temperature below 32°F (0°C) with low loading conditions, there should be from 6 to 10 gal. per ton (6.5 to 10.8 l/kW). To achieve this volume, it is often necessary to install a tank in the loop.

Tank should be baffled to ensure there is no stratification and that water (or brine) entering tank is adequately mixed with liquid in the tank.

The piping between the chiller and the fluid loop volume tank can be done to allow the tank to be on the return side of the chiller (tank piped to chiller inlet) or the supply side of the chiller (tank piped to the chiller outlet). However, it is recommended that the tank be piped to the return side of the chiller to buffer any changes in load, allowing more stable chiller operation.

Tank Installation

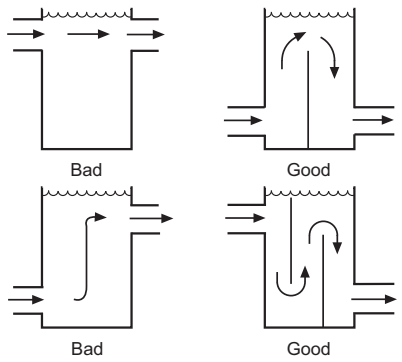

Evaporator fouling factor

Fouling in the evaporator affects chiller performance. As fouling factor is increased, both unit capacity and EER (Energy Efficiency Ratio) decrease. The impact of the fouling factor on performance varies significantly with chiller size and application conditions. Ratings must be determined by the Carrier Selection Program.

Evaporator freeze protection

Freeze protection for the evaporator is standard on all flooded-evaporator 30XV air-cooled chillers with Greenspeed® intelligence (except for areas which require the high ambient option). Flooded-evaporator units are protected from freezing down to 0°F (–18°C) through the evaporator heaters (if installed) and control algorithms. If flooded-evaporator chillers control the chilled water pump/valves, allowing for flow through the evaporator, the unit is protected from freezing down to –20°F (–29°C). Since power is sometimes lost for extended periods during winter storms, freeze protection provided by heater tapes will be effective only if a back-up power supply can be assured for the unit's control circuit, heater and evaporator pump. If not protected with an anti-freeze solution, draining the evaporator and outdoor piping, followed by the addition of a small amount of antifreeze solution, is recommended if the system will not be used during freezing weather conditions.

Consider both leaving water set point and ambient freeze conditions when determining antifreeze concentration. Both of these parameters can help determine the recommended concentration level. Higher concentration must be used to adequately protect the machine.

NOTE: Use only antifreeze solutions approved for heat exchanger duty.

For applications in which the leaving fluid temperature set point is between 39.9°F (4.4°C) and 30°F (–1.1°C), a suitable inhibited antifreeze solution must be used. The solution concentration must be sufficient to protect the chilled water loop to a freeze protection (first crystals) concentration of at least 15°F (8.3°C) below the leaving fluid temperature set point.

If the chiller refrigerant or fluid lines are in an area where ambient conditions fall below 34°F (1.1°C), it is highly recommended that an antifreeze solution be added to protect the unit and fluid piping to a temperature of 15°F (8.3°C) below the lowest anticipated ambient temperature.

Select concentration based on either burst or freeze protection as dictated by the application. If the chiller does not operate during the winter, and a start-up is not expected, a burst protection concentration is recommended. This concentration may not be high enough to pump the fluid through the unit. Burst protection is typically a lower concentration that will provide better performance from the machine. If the chiller does operate during winter, a freeze protection concentration is recommended. This concentration will be high enough to keep the fluid in a condition that it can be pumped at low ambient conditions.

IMPORTANT: Glycol antifreeze solutions are highly recommended since heater tapes provide no protection in the event of a power failure.

Consult glycol fluid manufacturers for burst protection recommendations and fluid specifications.

Operating Limits Tables — Standard (2-Pass) Evaporator

Operating Temperature Limits Applicable to All Sizes

OPERATING TEMPERATURE	MIN/MAX (°F)	MIN/MAX (°C)
Entering Water Temperature	45/70	7.2/21.1
Leaving Water Temperature	40/60	4.4/15.6
Entering Glycol Temperature	38/70	3.3/21.1
Leaving Glycol Temperature	35/60	1.6/15.6
Ambient Temperature (without wind baffle or hail guard)	32/125.6†	0/52.0†
Ambient Temperature (with wind baffle or hail guard*)	–20/125.6†	–6.7/52.0†

*To run the unit with ambient temperatures as low as –20°F (–29°C), standard tier units also require the use of variable speed condenser fans.

†To run the unit with ambient temperatures as high as 125.6°F (52°C) a high tier units must be selected.

NOTE: Standard tier units, without the addition of variable speed condenser fans, have a maximum ambient temperature of 105°F (40.6°C).

Min/Max Water Flow — Standard (2-Pass) Evaporator*

30XV	TIER	MINIMUM FLOW RATE		MAXIMUM FLOW RATE	
		(gpm)	(L/s)	(gpm)	(L/s)
140	S	155	9.8	682	43.0
	M/H	170	10.7	682	43.0
160	S	170	10.7	773	48.8
	M/H	195	12.3	773	48.8
180	S	195	12.3	816	51.5
	M/H	210	13.3	816	51.5
200	S	210	13.3	946	59.7
	M/H	229	14.4	946	29.8
225	S	257	16.2	1066	67.3
	M/H	272	17.2	1066	67.3
250	S	272	17.2	1234	77.9
	M/H	300	18.9	1234	77.9
275	S	300	18.9	1310	82.7
	M/H	319	20.1	1310	82.7
300	S	319	20.1	1397	88.2
	M/H	340	21.5	1397	88.2
325	S	340	21.5	1517	95.7
	M/H	365	23.0	1517	95.7
350	S	402	25.4	1661	104.8
	M/H	436	27.5	1661	104.8
400	S	436	27.5	1899	119.8
	M/H	455	28.7	1899	119.8
450	S	455	28.7	2136	134.8
	M/H	541	34.1	2136	134.8
500	S	541	34.1	2373	149.7
	M	541	34.1	2373	149.7

*Data do not reflect evaporator for brine application or evaporator for process brine application. For these values, please contact your Carrier representative.

Min/Max Water Flow — 1-Pass Evaporator

30XV	TIER	MINIMUM FLOW RATE		MAXIMUM FLOW RATE	
		(gpm)	(L/s)	(gpm)	(L/s)
140	S	309	19.5	1363	86.0
	M/H	340	21.5	1363	86.0
160	S	340	21.5	1546	97.6
	M/H	389	24.5	1546	97.6
180	S	389	24.5	1632	103.0
	M/H	420	26.5	1632	103.0
200	S	420	26.5	1891	119.3
	M/H	457	28.8	1891	119.3
225	S	516	32.6	2131	134.5
	M/H	547	34.5	2131	134.5
250	S	547	34.5	2467	155.7
	M/H	609	38.4	2467	155.7
275	S	609	38.4	2621	165.4
	M/H	637	40.2	2621	165.4
300	S	637	40.2	2794	176.3
	M/H	680	42.9	2794	176.3
325	S	680	42.9	3034	191.4
	M/H	729	46.0	3034	191.4
350	S	807	50.9	3323	209.7
	M/H	872	55.0	3323	209.7
400	S	872	55.0	3797	239.6
	M/H	912	57.5	3797	239.6
450	S	912	57.5	4272	269.6
	M/H	1085	68.5	4272	269.6
500	S	1085	68.5	4746	299.5
	M	1085	68.5	4746	299.5

Min/Max Water Flow — 3-Pass Evaporator*

30XV	TIER	MINIMUM FLOW RATE		MAXIMUM FLOW RATE	
		(gpm)	(L/s)	(gpm)	(L/s)
140	S	77	4.9	341	21.5
	M/H	77	4.9	341	21.5
160	S	77	4.9	386	24.4
	M/H	121	7.6	386	24.4
180	S	121	7.6	408	25.7
	M/H	124	7.8	408	25.7
200	S	124	7.8	473	29.8
	M/H	152	9.6	473	29.8
225	S	139	8.8	533	33.6
	M/H	155	9.8	533	33.6
250	S	155	9.8	617	38.9
	M/H	149	9.4	617	38.9
275	S	149	9.4	655	41.3
	M/H	155	9.8	655	41.3
300	S	155	9.8	698	44.0
	M/H	177	11.2	698	44.0
325	S	177	11.2	758	47.8
	M/H	204	12.9	758	47.8
350	S	248	15.6	831	52.4
	M/H	282	17.8	831	52.4
400	S	282	17.8	949	59.9
	M/H	294	18.6	949	59.9
450	S	294	18.6	1068	67.4
	M/H	313	19.8	1068	67.4
500	S	313	19.8	1187	74.9
	M	313	19.8	1187	74.9

*Data do not reflect evaporator for brine application or evaporator for process brine application. For these values, please contact your Carrier representative.

High ambient temperature operation

When variable speed condenser fans are employed and nominal voltage is available, the highest allowable ambient air temperature start-up and operation is 125.6°F (52°C) for high tier units, 115°F (46.1°C) for mid tier units, and 110°F (43.3°C) for standard+ units. Although the selection software does not allow selections above 125.6°F (52°C) ambient, the mid and high tier units are operational up to 131°F (55°C).

NOTE: Standard tier units, without the addition of variable speed condenser fans, have a maximum ambient temperature of 105°F (40.6°C).

Low ambient temperature operation

Units will start and operate down to 32°F (0°C) as standard. With the inclusion of wind baffles (field fabricated and installed) or hail guards and variable condenser fans (standard on most units), the unit is capable to start as low as 5°F (–15°C) and be operational to as low as –20°F (–29°C) ambient temperature. Inhibited propylene glycol or other suitable corrosion-resistant antifreeze solution must be field supplied and installed in all units for unit operation below 34°F (1.1°C). Solution must be added to fluid loop to protect loop down to 15°F (8.3°C) below minimum operating ambient temperature. Concentration should be based on expected minimum temperature and either "Burst" or "Freeze" protection levels. At least 6 gal. per ton (6.5 l/kW) of water volume is the recommended minimum for a moderate system load.

Altitude correction factors

Correction factors must be applied to standard ratings at altitudes above 2000 ft (609.6 m) using the following multipliers:

Altitude Correction Factors

ALTITUDE		CAPACITY MULTIPLIER	COMPRESSOR POWER MULTIPLIER
(ft)	(m)		
2,000	609.6	0.99	1.01
4,000	1219.2	0.98	1.02
6,000	1828.8	0.97	1.03
8,000	2438.4	0.96	1.04
10,000	3048.0	0.95	1.05

Condenser airflow

Airflow restrictions will affect the unit capacity, condenser head pressure, and compressor power input. Correction factors to be applied for external static restrictions up to 0.4 in. wg (100 Pa) are as follows:

EXTERNAL STATIC		CAPACITY MULTIPLIER			EER MULTIPLIER		
in. wg	Pa	STD+ TIER	MID TIER	HIGH TIER	STD+ TIER	MID TIER	HIGH TIER
0.0	0	1.00	1.00	1.00	1.00	1.00	1.00
0.1	25	0.99	0.99	0.99	0.98	0.98	0.97
0.2	50	0.98	0.98	0.98	0.94	0.93	0.92
0.3	75	0.99	0.99	0.99	0.93	0.93	0.93
0.4	100	0.98	0.98	0.98	0.91	0.90	0.89

Please note that for applications with greater than 0.2 in. wg (greater than 50 Pa), the high static fan option is required.

Multiple chillers

Where chiller capacities greater than can be supplied by a single 30XV chiller are required or where standby capability is desired, chillers may be installed in parallel or series. Units may be of the same or different sizes with this piping arrangement. However, for parallel chiller applications, evaporator flow rates must be balanced to ensure proper flow to each chiller.

Unit software is capable of controlling two units as a single plant by making use of the dual chiller control feature. Refer to the Controls, Start-up, Operation, Service and Troubleshooting guide for further details.

If the dual chiller algorithm is used and the machines are installed in parallel, an additional chilled water sensor must be installed for each chiller (to provide the required hardware, a dual chiller accessory kit is available from the factory). Install one thermistor and well per chiller in the common leaving water header. Chillers installed in series do not require additional sensors.

Parallel chiller control with dedicated pumps is recommended. The chiller must start and stop its own water pump located in its own piping. Check valves are required at the discharge of each pump. If pumps are not dedicated for each chiller, then isolation valves are required. Each chiller must open and close its own isolation valve through the unit control (the valve must be connected to the pump outputs).

Dual chiller control

The Carrier Controller microprocessor allows 2 chillers (piped in parallel or series) to operate as a single chilled water plant with standard control functions coordinated through the master chiller controller. This standard Carrier Controller microprocessor feature requires a communication link between the 2 chillers.

There are several advantages to this type of control:

- Redundancy (multiple circuits)
- Better low load control (lower tonnage capability)
- Lower rigging lift weights (2 machines rather than one large machine)
- Chiller lead-lag operation (evens the wear between the two machines)

Parallel Dual Chiller Operation

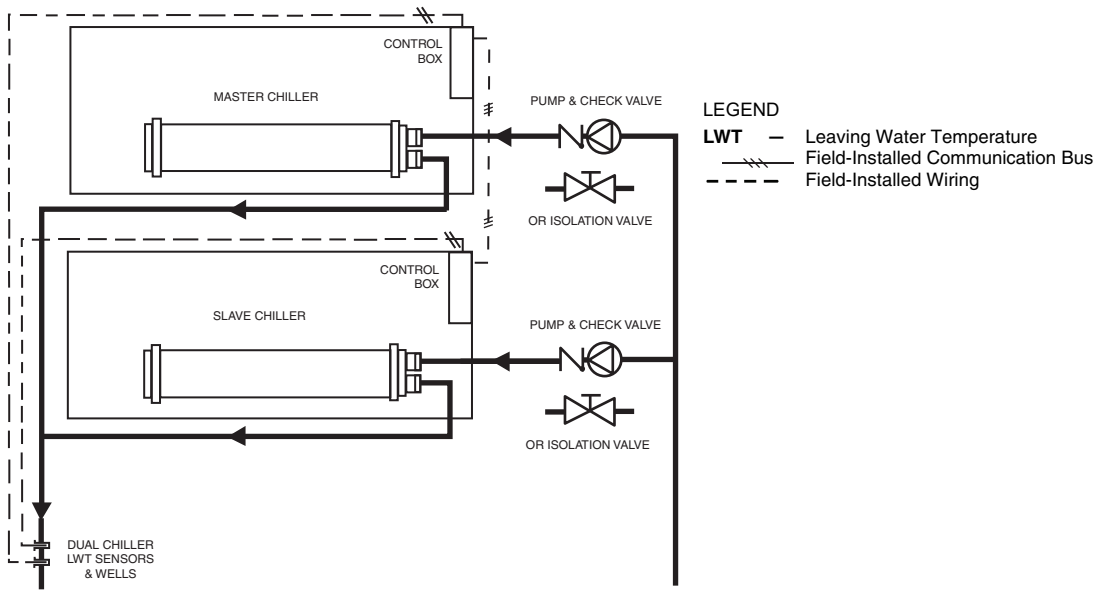

Series Dual Chiller Operation

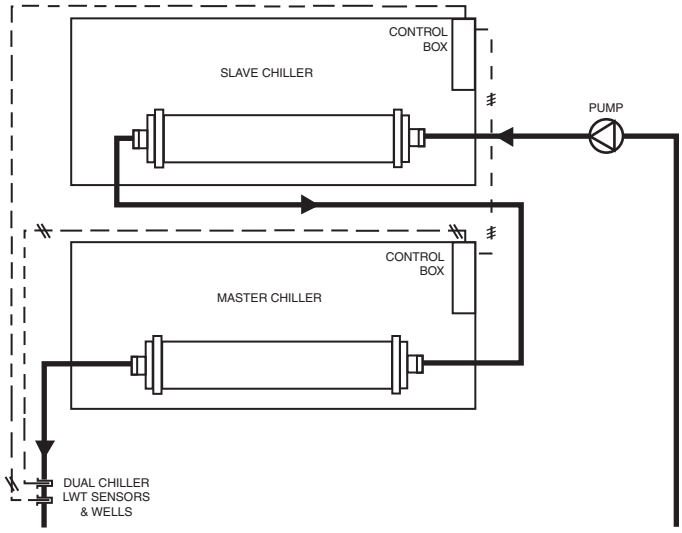

Condenser coil protection (*EnviroShield*™)

Refer to the environmental selection guides for more information. If the standard Novation® (microchannel) coil does not meet the corrosion requirements for a given application, additional coil options are available. For specific geographical recommendations, please refer to the NACO Packaged Chiller Builder program.

Aluminum fin/copper tube coils are constructed of seamless copper tubes mechanically bonded to aluminum fins. The fins have wavy enhancements. These coils are not recommended for corrosive environments.

E-coated Novation® coils have an extremely flexible and durable epoxy coating uniformly applied to all coil surfaces. Unlike brittle phenolic dip and bake coatings, e-coat provides superior protection with unmatched flexibility, edge coverage, metal adhesion, thermal performance and most importantly, corrosion resistance. E-coated coils provide this protection since all coil surfaces are completely encapsulated from environmental contamination. This option provides the best protection for Novation® coil technology. E-coated aluminum microchannel coils shall be capable of withstanding a 10,000-hour salt spray test in accordance with the ASTM (American Society for Testing and Materials) (U.S.A.) B-117 Standard.

E-coated aluminum-fin coils have the same flexible and durable epoxy coating as e-coated Novation® coils. This option provides better protection compared to standard or pre-coated aluminum-fin coils in many environments. E-coated aluminum-fin coils shall be capable of withstanding a 10,000-hour salt spray test in accordance with the ASTM (American Society for Testing and Materials) (U.S.A.) B-117 Standard.

Air separation

For proper system operation, it is essential that water loops be installed with proper means to manage air in the system. Free air in the system can cause noise, reduce terminal output, stop flow, or even cause pump failure due to pump cavitation. For closed systems, equipment should be provided to eliminate all air from the system.

The amount of air that water can hold in solution depends on the pressure and temperature of the water/air mixture. Air is less soluble at higher temperatures and at lower pressures. Therefore, separation can best be done at the point of highest water temperature and lowest pressure. Typically, this point would be on the suction side of the pump as the water is returning from the system or terminals. This is generally the optimal place to install an air separator, if possible.

Install automatic air vents at all high points in the system. (If the 30XV unit is located at the high point of the system, a vent can be installed on the piping leaving the heat exchanger on the 1/4 in. NPT female port.)

Install an air separator in the water loop, at the place where the water is at higher temperatures and lower pressures — usually in the chilled water return piping. On a primary-secondary system, the highest temperature water is normally in the secondary loop, close to the decoupler. Preference should be given to that point on the system. In-line or centrifugal air separators are readily available in the field.

It may not be possible to install air separators at the place of the highest temperature and lowest pressure. In such cases, preference should be given to the points of highest temperature. It is important that the pipe be sized correctly so that free air can be moved to the point of separation. Generally, a water velocity of at least 2 feet per second (0.6 m per second) will keep free air entrained and prevent it from forming air pockets.

Automatic vents should be installed at all physically elevated points in the system so that air can be eliminated during system operation. Provisions should also be made for manual venting during the water loop fill.

IMPORTANT: Automatic vents should be located in accessible locations for maintenance purposes and protected from freezing.

Electrical/utility interests

Energy management

Use of energy management practices can significantly reduce operating costs especially during off-peak modes of operation. Demand limiting and temperature reset are two techniques for accomplishing efficient energy management. See Demand Limiting (also called load shedding) section below for further details.

Demand limiting (load shedding)

When a utility's demand for electricity exceeds a certain level, loads are shed to keep electricity demand below a prescribed maximum level. Typically, this happens on hot days when air conditioning is most needed. The energy management module (EMM) can be added to accomplish this reduction. Demand may be limited on the unit by resetting water temperature, or by unloading the chiller to a given predetermined percentage of the load. Demand limit may also be driven by an external 4 to 20 mA signal. These features require a signal from an intelligent central control. Do not cycle demand limiter for less than 10 minutes on and 5 minutes off. Duty cycling cycles electrical loads at regular intervals regardless of need. This reduces the electrical operating costs of building by "fooling" demand indicating devices. Duty cycling of compressors or fans is not recommended since motor winding and bearing life will suffer from constant cycling.

Remote on-off control

Remote on-off control may be applied by hard-wired connection (see Controls and Troubleshooting literature) or by connection to the Carrier Comfort Network® (CCN) system.

Minimum time to power chiller before start-up

To ensure that the oil sump heaters are provided sufficient time to raise the oil sump temperature to the required operating point, power must be applied to the control circuit a minimum of 24 hours prior to chiller start-up. On 30XV chillers, the control circuit obtains its power either from a direct 115-V, single-phase power source or from an optional control transformer on the main 3-phase power supply.

Integrated VFDs for increased efficiency

The 30XV units with Greenspeed® intelligence are equipped with VFDs powering the compressors on all units and, on most units, VFDs power the fans of each circuit. The VFDs are individually controlled to optimize unit efficiency and performance.

Variable-speed condenser fans

Highly efficient part load performance, high ambient temperature capability, and reduced acoustic levels are available with condenser fan motors controlled by variable speed drives. In most applications, the chiller will run at part load conditions the vast majority of the time, and this is particularly the case if the application has a 24/7 duty cycle. The option for variable speed condenser fans is available only on standard-tier units because both mid and high-tier units already employ this feature. This feature also enables a standard tier chiller to operate at low ambient conditions (–20°F [–29°C]) with the inclusion of wind baffles or hail guards.

Sound optimization

The sound produced by a chiller is a major consideration on many applications. Chiller sound ratings are normally established based on the chiller's full capacity at the given conditions, with the only consideration for sound being the addition of either a sound blanket or a sound enclosure of some type. The 30XV unit, due to its variable-speed drive and modern control software, can be selected in a manner which can consider the impact of chiller sound while determining chiller capacity. This new chiller feature can be accessed by selecting the chiller with the sound optimization feature.

The sound optimization is configured in the chiller selection program. This option consists of a combination of chiller hardware (which may include an optional compressor enclosure) as well as chiller software. The result of this software/hardware combination is to optimize the machine performance to best meet the customer requirements.

Capacity Recovery™ feature

With the rise in data centers and critical cooling applications, focus has increased on capacity recovery times for chiller products. Capacity recovery is defined as the time it takes to reach 100% capacity after power is restored to the chiller, given that the full cooling load is present. Capacity recovery times are the critical factor to consider in data centers due to the consistently high loads in the space and the need to maintain the temperatures. Other manufacturers often discuss re-start time without providing the details of how long it takes to reach full capacity, but the achievement of full capacity is the critical parameter to the end user.

With Carrier's standard Capacity Recovery™ feature, when power is restored immediately following a power outage and a restart is commanded, the AquaForce® 30XV140-500 air-cooled chiller with Greenspeed® intelligence high-efficiency variable-speed screw compressors and variable-speed condenser fans is able to produce 100% of the cooling capacity within 5 minutes without the use of an individual uninterruptible power supply (UPS) unit or a separate UPS circuit, and within 4 minutes with the UPS, offered as an option.

This recovery capability is under normal conditions with no safety/control manual reset items or alarms and with the provision that required chilled water flow is available. Recovery may take longer or be prevented when condenser air inlet temperature is >110°F (43.3°C) and leaving chilled water temperature is >55°F (12.7°C) or under similar extreme conditions.

Free Cooling

Due to the internal loads driven by people, computers, machinery and lighting, many HVAC applications require cooling even in colder months. While running a chiller in the colder months is one way to satisfy the cooling requirement, it can be costly to do so. Another way to meet the cooling load requirement is to operate a waterside economizer, sometimes known as a free cooling system.

There are 2 reasons a free cooling system might be a wise choice in cooler-climate applications. The first is to meet ASHRAE 90.1-2016 requirements. The other reason is to simply take advantage of the colder weather to meet the building's set point, thus saving energy. Facilities such as data centers are particularly interested in these types of systems.

When using an air cooled chiller for mechanical cooling, most methods of obtaining free cooling with a waterside economizer utilize some type of "dry cooler." The main differences in the different dry cooler designs are where the dry coolers are located and how the dry coolers are controlled. One economizer style is called a "Remote Dry Cooler." It sits remotely from the air-cooled chiller, and chilled-fluid piping is required between the dry cooler and the chiller. In this case, the chiller and the dry cooler are controlled separately. The second style is a "Stacked Coil Dry Cooler." In this case, the dry cooling coils are mounted, or "stacked," right next to the existing refrigerant condenser coils on the chiller. The third style is a purpose-made "Modular" design, in which the mechanical cooling coils and the free cooling coils are located in separate sections of the overall chiller design. This style is designed to integrate directly to specific air-cooled chillers, and this is the style incorporated by the 30XV chiller. For both the stacked and modular designs, the control of the dry cooler section is supervised by the chiller controller.

The 30XV free cooling offering consists of sizes 020 (2V design) to 080 (8V design). All free cooling offerings, regardless of size, have one control panel, and this control panel is located at the free cooling inlet end (the end in which system return fluid enters). The free cooling control panel does not require user interaction because this panel directly interacts with the main chiller control panel.

Piping in the free cooling section can be a series arrangement or a parallel arrangement.

The term "parallel," as used here, indicates that system return fluid (at the system return fluid temperature) will enter each coil. The term "series," as used here, indicates that one or more of the free cooling coils will be supplied with fluid that has already passed through a coil or a bank of free-cooling coils. See the Free Cooling Schematic Piping Configurations on pages 29 for further clarification on this point. Please note that there are many ways a customer may accomplish field piping and that all field piping details, covering all piping arrangements and all free cooling unit sizes, are available in the 30XV Installation Instructions (not in this overview).

Free Cooling System*

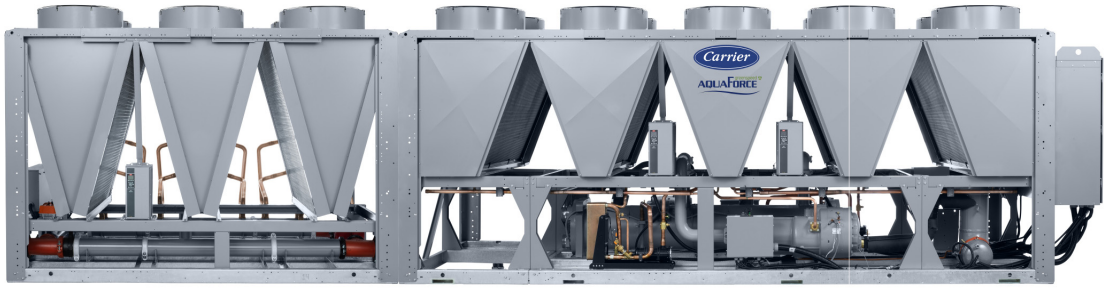

* The free cooling system is flexible enough so that it may be used with other Carrier air-cooled chillers. This is an example of a free cooling system applied to a 30XV chiller.

An advantage associated with the series arrangement is optimization of free cooling capacity. An advantage of the parallel arrangement is lower fluid-side pressure drop. The Carrier Electronic Catalog Program will present free cooling performance associated with all free cooling sizes and piping arrangements.

A free cooling system has 3 modes of operation. The modes are free cooling only, mechanical cooling only, or hybrid mode. Hybrid mode is the case in which mechanical cooling and free cooling run at the same time. It is worthwhile to discuss how a unit with a free cooling system operates.

When the ambient temperature is too warm to provide free cooling, the chiller operates as normal in mechanical cooling mode, and the 3-way valve(s) at the inlet(s) do not allow chilled fluid to enter the free cooling coils. In the stacked design arrangement, the fans need to simultaneously force air through both the chiller condenser coils and also the unused free cooling coils, thus wasting energy. With the 30XV modular arrangement, the air only flows over the mechanical cooling coils that are in use, while the fans for the free cooling portion will simply be turned off, thereby saving energy. See the diagram below.

As the ambient temperature drops, a temperature will be reached where some free cooling is feasible (this temperature is customizable and the signal to initiate free cooling is based upon a factory-installed outside air temperature sensor). At this point, the 3-way valve diverts flow to the free cooling coils. After the chilled fluid passes through the free cooling coils, that fluid enters the chiller evaporator inlet. If the system set point is not met by the free cooling coils alone, the chiller will perform the remaining mechanical cooling.

With the stacked design operating in the hybrid mode, air needs to flow over both sets of coils, but the fan control system faces two conflicting issues. The free cooling coils want the most air flow possible in order to accomplish the greatest amount of free cooling. The mechanical cooling coils will want to lower the fan speed to ensure the refrigerant temperature doesn't get too cold, missing the set point and potentially damaging systems. Therefore, the control system will protect the chiller at the expense of free cooling tons, wasting the opportunity to obtain the most out of the free cooling system.

When the 30XV operates in hybrid mode, the air flows over the mechanical and free cooling coils separately. In this way, the free cooling fans can ramp up, extracting every bit of free cooling possible. At the same time, the mechanical cooling fans can slow down, ensuring set point and equipment protection are maintained. See the diagram below.

The ambient temperature may eventually drop to a point where mechanical cooling can shut off completely and set point can be met by free cooling operation alone. With the stacked design, air needs to flow over both sets of coils, including the unused mechanical cooling coils. This is similar to the mechanical-cooling-only situation where air is flowing across both coils when only one is active. With the 30XV arrangement, only the free cooling portion of the unit will be active, with the controls maximizing the free cooling tons while the fans for the mechanical cooling section will simply turn off.

Bolt-On Dry Cooler: Modular Design

Mechanical-Cooling Only

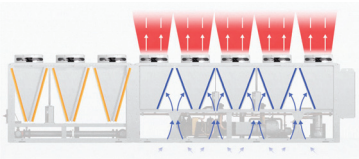

- No air flow through free cooling coils
- Lower fan power required

Free-Cooling Only

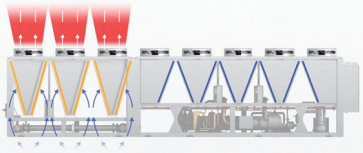

- No air flow through mechanical cooling coils
- Lower fan power required

Hybrid-Cooling Free & Mechanical

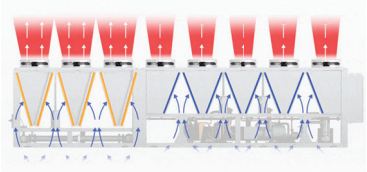

- Fan speeds optimized for mechanical & free cooling coils
- No risk of nuisance trips
- Max free cooling capacity

In addition to performance benefits associated with the 30XV style free cooling design, the service benefits, compared to a stacked design, are substantial. Stacked designs have air flowing over 2 close coupled coils, and one of them essentially becomes a filter, trapping dirt and debris between the 2. In many cases, this can be nearly impossible to clean, and coil replacement can be very difficult.

With the 30XV design, because there's only one coil, most dirt is expelled by the existing fans. If needed, a normal coil wash will eliminate any remaining dirt. Changing coils is simple, since they slide out with nothing in the way. In addition, service can be done on either the mechanical or free cooling side of the system, without taking the other side offline. And, to improve the serviceability of the free-cooling coils, Carrier has developed a patent-pending removable coil trim cover, as shown below. This removable cover allows the coils to be cleaned from inside out as well, which is probably the most effective way to clean the coils, since the debris comes from the outside while the unit is operating.

Possibly the most desirable feature of a 30XV free cooling arrangement is the customizable nature of the design. Instead of requiring the customer to install an "all or nothing" type of arrangement, the customer can determine how much free cooling they would like for each particular job. While some jobs may only desire a limited amount of free cooling, others may want substantially more. With the 30XV design, the amount is completely customizable.

Free Cooling Module Removable Coil Trim Cover for Cleaning

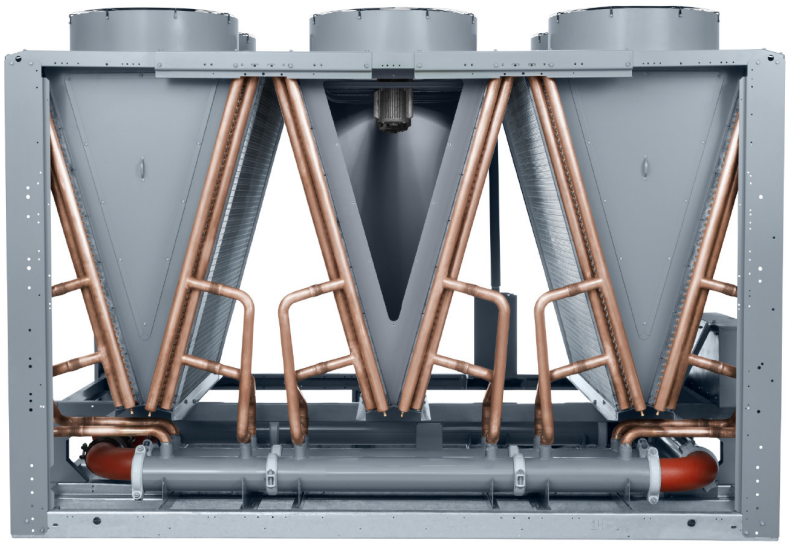

Guide specifications

Outdoor Air-Cooled Liquid Chiller

HVAC Guide Specifications

Size Range: **140 to 500 Tons, Nominal (490 to 1760 kW, Nominal)**

Carrier Model Number: **30XV with Greenspeed® Intelligence**

Part 1 — General

1.01 SYSTEM DESCRIPTION

Microprocessor controlled, air-cooled liquid chiller for outdoor installation, utilizing variable speed screw compressors on all models, and utilizing low sound variable speed fans on all mid and high-tier models and on standard models with variable speed condenser fan option.

1.02 QUALITY ASSURANCE

A. Unit shall be rated in accordance with AHRI (Air-Conditioning, Heating and Refrigeration Institute) Standard 550/590 (U.S.A.) latest edition and all units shall meet requirements of ASHRAE (American Society of Heating, Refrigeration and Air-Conditioning Engineers) Standard 90.1-2016.

B. Unit construction shall comply with ASHRAE 15 Safety Code, UL (Underwriters Laboratories) 1995, and ASME (American Society of Mechanical Engineers) applicable codes (U.S.A. codes).

C. The management system governing the manufacture of this product is ISO (International Organization for Standardization) 9001:2015 certified.

D. An operational test, in which the chiller is run under load, is performed at the factory. This test checks for proper operation of fans as well as various controls and safeties, and a Certificate of Unit Testing, indicating successful end-of-line testing, is provided with the unit.

1.03 DELIVERY, STORAGE AND HANDLING

A. Unit controls shall be capable of withstanding 150°F (65.5°C) storage temperatures in the control compartment.

B. Unit shall be stored and handled per unit manufacturer's recommendations.

1.04 PHYSICAL LAYOUT

A. Unit shall be located such that minimum recommended airflow clearances are maintained.

B. If minimum recommended clearances cannot be maintained, an ExpertFit™ analysis must be performed. The ExpertFit software model is available in the chiller selection program and predicts air-cooled chiller performance within a confined space.

Part 2 — Products

2.01 EQUIPMENT

NOTE: To avoid extended chiller downtime, when changing chiller sensors and/or instrumentation, no control panel reprogramming shall be required.

A. General:

Factory assembled, single-piece chassis, air-cooled liquid chiller. Contained within the unit cabinet shall be all factory wiring, piping, controls, refrigerant charge, and special features required prior to field start-up.

B. Materials of Construction:

1. The base rail is industrial-quality, 7 ga, zinc-dipped galvanized frame (with Magni-coated screws).
2. Cabinet shall be galvanized steel casing with a baked enamel powder or pre-painted finish.
3. Painted parts shall withstand 1000 hours in constant neutral salt spray under ASTM B117 conditions with a 1 mm scribe per ASTM D1654. After test, painted parts shall show no signs of wrinkling or cracking, no loss of adhesion, no evidence of blistering, and the mean creepage shall not exceed 1/4 in. (Rating ≥ 4 per ASTM D1654) on either side of the scribe line.

C. Fans:

1. On standard-tier units, condenser fans shall be direct-driven, 9-blade airfoil cross-section, reinforced polymer construction, shrouded-axial type, and shall be statically and dynamically balanced with inherent corrosion resistance.
2. On mid-tier and high-tier units, and standard tier units with variable speed condenser fan option, condenser fans shall be variable speed, 9-blade airfoil cross-section, reinforced polymer construction, shrouded-axial type, and shall be statically and dynamically balanced with inherent corrosion resistance.
3. The variable speed drives for mid-tier and high-tier unit condenser fans, and standard tier units with variable speed condenser fan option, shall include a DC link reactor.
4. Air shall be discharged vertically upward.
5. All VFDs on the chiller (all compressor motors and fans, as applicable) shall be fully air cooled and shall not require an additional glycol cooling system, thus avoiding the maintenance associated with such cooling systems.
6. Fans shall be protected by coated steel wire safety guards.
7. Fan blades shall have serrated edges to minimize the sound that is produced.
8. Variable speed condenser fans are always provided on 575 v units and are not available for unit sizes 225-500 at 208/230 v or for unit size 140 at any voltage.

D. Compressor/Compressor Assembly:

1. Comprised of semi-hermetic twin screw type compressors.
2. Compressor motor shall be direct drive, VFD (variable frequency drive) controlled to match

the load requirement, with a maximum speed of 5880 or 6300 rpm. The motors are protected by motor temperature sensors, and are suction gas cooled.

3. In order to optimally match building load, maximize chiller power factor and help equalize compressor run time, all chiller compressors must be VFD controlled.
4. For improved reliability with fewer moving parts, the compressor shall not employ a slide valve.
5. Capacity control shall utilize a VFD to unload each compressor from 100% to 25% of full load, resulting in a chiller minimum load of less than 15%. A VI (volume index) valve is used to optimize the efficiency at full and part load conditions.
6. The VFD for each compressor motor shall include a DC link reactor.
7. Compressor shall include an internal muffler to reduce pulsations in the system.
8. All VFDs on the chiller (all compressor motors and fans, as applicable) shall be fully air cooled and shall not require an additional glycol cooling system, thus avoiding the maintenance associated with such cooling systems. If supplying VFD glycol cooling system equipment, manufacturer must provide a separate line item in their quotation for the following:
   a. Every five years glycol solution replacement and clean strainer
   b. Yearly pH test
   c. Yearly fluid level check
   d. Yearly glycol condenser cleaning
   e. Hail guard provided for glycol condenser section

   The following list of critical parts must be provided:
   f. Glycol pump
   g. Glycol condenser or plate frame heat exchanger
   h. Extra hoses and clamps
   i. Backup fan coil fan
   j. Backup fan coil evaporator
9. Compressor performance shall not rely on an internal Teflon[1] coating because this material deteriorates over time. This deterioration results in loss of capacity, higher operating costs due to lower efficiency and increased maintenance requirements.

E. Flooded Evaporator:
   1. Shall be mechanically cleanable tubes in a shell-and-tube type evaporator with removable heads.
   2. Tubes shall be internally enhanced seamless-copper type rolled into tube sheets.
   3. Shall be equipped with Victaulic-type water connections.
   4. Shell and evaporator heads shall be insulated with 3/4-in. PVC foam (closed-cell) with a maximum K factor of 0.28.
   5. Design shall incorporate 2 independent refrigerant circuits.
   6. Evaporator shall be tested and stamped in accordance with ASME Code for a refrigerant working side pressure of 220 psig (1517 kPa). Evaporator shall have a maximum water-side pressure of 300 psig (2068 kPa).
   7. Evaporator shall have a evaporator drain and vent.
   8. Low-ambient temperature protection: unit shall have factory-installed evaporator heater (where applicable) to protect evaporator from ambient temperature freeze down to 0°F (–17.8°C).
   9. Evaporator shall be provided with a factory-installed flow switch.

F. Condenser:
   1. Coil shall be air-cooled Novation® heat exchanger technology (MCHX) and shall have a series of flat tubes containing a series of multiple, parallel flow microchannels layered between the refrigerant manifolds. Novation coils shall consist of a two-pass arrangement. Coil construction shall consist of aluminum alloys for fins, tubes, and manifolds in combination with a corrosion-resistant coating.
   2. Tubes shall be cleaned, dehydrated, and sealed.
   3. Assembled condenser coils shall be pressure tested at the coil factory at 660 psig (5448 kPa) and subsequently shall be leak tested at 145 psig ±5 psig (1000 kPa ±34.5 kPa) and pressure tested at 350 psig (2413 kPa) at final unit assembly.
   4. To plan the chiller installation and for ease of maintenance/coil removal, all refrigerant piping entering and leaving the condenser coils shall be located on only one side of the chiller so the coils can be removed (when needed) from the side free of piping. This is important to consider because removing the coils from the header side, although possible, involves extra labor due to extra bending and brazing of the coil headers.

G. Refrigeration Components:

   Refrigerant circuit components shall include replaceable-core filter drier, moisture indicating sight glass, electronic expansion valve, discharge service valves

1. Third-party trademarks and logos are the property of their respective owners.

and liquid line service valves, and complete operating charge of both refrigerant and compressor oil.

H. Controls, Safeties, and Diagnostics:

1. Unit controls shall include the following minimum components:
   a. Microprocessor with non-volatile memory. Battery backup system shall not be accepted.
   b. Separate terminal block for power and controls.
   c. Separate 115-v power supply to serve all controllers, relays, and control components.
   d. ON/OFF control switch.
   e. Replaceable solid-state controllers.
   f. Pressure sensors installed to measure suction, oil, economizer, discharge, and liquid pressure. Thermistors installed to measure evaporator entering and leaving fluid temperatures and outside-air temperature.
2. Unit controls shall include the following functions:
   a. Automatic circuit lead/lag.
   b. Capacity control based on leaving chilled fluid temperature and compensated by rate of change of return-fluid temperature with temperature set point accuracy to 0.1°F (0.05°C).
   c. Limiting the chilled fluid temperature pull-down rate at start-up to an adjustable range of 0.2°F to 2°F (0.1 to 1.1°C) per minute to prevent excessive demand spikes at start-up.
   d. Seven-day time schedule.
   e. Leaving chilled fluid temperature reset from return fluid and outside air temperature.
   f. Chilled water pump start/stop control.
   g. Chiller control for parallel chiller applications without addition of hardware modules and control panels (requires thermistors).
   h. Timed maintenance scheduling to signal maintenance activities for strainer maintenance and user-defined maintenance activities.
   i. Low ambient protection to energize evaporator heaters (if installed).
   j. Single step demand limit control activated by remote contact closure.
   k. Night time sound mode to reduce the sound of the machine by a user-defined schedule.
3. Diagnostics:
   a. The control panel shall include, as standard, a display:
      1) Seven-inch color touch screen display with stylus.
      2) Display shall allow a user to navigate through menus, select desired options and modify data.
   b. Features of the display shall include:
      1) Multiple connection ports for USB, Ethernet or BACnet IP, and Carrier Comfort Network® (CCN) connections.
      2) Automatic reporting of alarms over email.
      3) Ability to graphically plot trends of system performance and conditions over time.
      4) Graphical summary display of current chiller operation and water conditions.
      5) Display shall allow access to configuration, maintenance, service, set point, time schedules, alarm history, and status data.
      6) Three levels of password protection against unauthorized access to configuration and maintenance information, and display set up parameters.
      7) Full compatibility with the Carrier Comfort Network® (CCN) system to provide email alarm notification and to provide network capability to fully monitor and control chiller.
      8) Display shall be capable of displaying the last 50 alarms with clear full text description and time and date stamp, and will store a snapshot of operating conditions before and after the 10 most recent alarms.
      9) Display run hours and number of starts for machine and individual compressors.
      10) Display current draw for each circuit compressor and fans.
      11) The control system shall allow software upgrade without the need for new hardware modules.
4. Safeties:
   a. Unit shall be equipped with thermistors and all necessary components in conjunction with the control system to provide the unit with the following protections:
      1) Reverse rotation.
      2) Low chilled fluid temperature.
      3) Motor overtemperature.
      4) High pressure.
      5) Electrical overload.
      6) Loss of phase.
      7) Loss of chilled water flow.
   b. Condenser-fan motors shall have internal overcurrent protection.

I. Operating Characteristics:

1. All high-tier units, without modification, shall be capable of starting and running at outdoor ambient temperatures from 32°F (0°C) to 125.6°F (52°C). Selections up to 125.6°F

(52°C) must be provided when requested, and high-tier units shall be operational up to 131°F (55°C).

2. All mid-tier units, without modification, shall be capable of starting and running at outdoor ambient temperatures from 32°F (0°C) to 115°F (46.1°C).
3. All standard-tier units which employ variable speed condenser fans (S+ model) shall be capable of starting and running at outdoor ambient temperatures from 32°F (0°C) to 110°F (43.3°C).
4. Standard-tier units, without the addition of variable speed condenser fans, shall be capable of starting and running at outdoor ambient temperatures from 32°F (0°C) to 105°F (40.6°C).
5. Unit shall be capable of starting up with 95°F (35°C) entering fluid temperature to the evaporator.
6. After power restoration, and with the Capacity Recovery™ feature (a standard controls feature) enabled, unit shall be capable of full capacity recovery in less than 5 minutes.

J. Motors:

Condenser-fan motors shall be totally enclosed, air over, variable speed, 3-phase type with permanently lubricated bearings and Class F insulation. Fans shall be 8-pole for standard tier units which do not employ variable speed condenser fans and 6-pole for medium and high tier units and any standard tier units with optional variable speed condenser fans.

K. Electrical Requirements:

1. Unit primary electrical power supply shall enter the unit at a single location (all chiller voltage/size combinations shall have the ability to accommodate 2 power supplies to meet job-specific requirements).
2. Primary electrical power supply shall be rated to operate up to 125.6°F (52°C) ambient temperature for all models.
3. Unit shall operate on 3-phase power at the voltage shown in the equipment schedule.
4. Control points shall be accessed through terminal block.
5. Unit shall be shipped with factory control and power wiring installed.
6. Unit shall have a standard SCCR (short circuit current rating) value of 25 kA for all voltages other than 575-v, and 10 kA for 575-v units.

L. Chilled Water Circuit:

1. Chilled water circuit shall be rated for 300 psig (2068 kPa).
2. Thermal dispersion proof of flow switch shall be factory installed and wired.

M. Special Features:

Certain standard features are not applicable when the features designated by * are specified. For assistance in amending the specifications, contact your Carrier representative.

1. Variable Speed Condenser Fans:

All fans on the unit shall have variable speed fan motors to provide higher part load efficiency and reduced acoustic levels. Each fan circuit shall have a factory-installed, independent variable speed drive with display. Variable speed drives are rated IP-55 enclosures and UL Listed. The use of this option, with the addition of antifreeze in the evaporator circuit and wind baffles or hail guards, shall allow running with outdoor ambient temperatures down to –20°F (–29°C). Variable speed condenser fans also allow the chiller to operate at ambient temperatures as high as 125.6°F (52°C). This option is only available on standard-tier units because both mid-tier and high-tier units are automatically provided with this functionality. Variable speed condenser fans are always provided on 575 v units, and not available for unit sizes 225-500 at 208/230 v or for unit size 140 standard tier at any voltage.

2. Unit-Mounted Non-Fused Disconnect:

Unit shall be supplied with factory-installed, lockable, non-fused electrical disconnect for main power supply.

This factory option is not available with dual point power in sizes 350-500.

3. Optional Condenser Coil Materials:

a. E-coated microchannel coils:

E-coated aluminum microchannel coil shall have a flexible epoxy polymer coating uniformly applied to all coil external surface areas without material bridging between fins or louvers. Coating process shall ensure complete coil encapsulation, including all exposed fin edges. E-coat shall have a thickness of 0.8 to 1.2 mil with top coat having a uniform dry film thickness from 1.0 to 2.0 mil on all external coil surface areas including fin edges. E-coated coils shall have superior hardness characteristics of 2H per ASTM D3363-00 and cross hatch adhesion of 4B-5B per ASTM D3359-02. Impact resistance shall be up to 160 in./lb (ASTM D2794-93). E-coated coil shall have superior impact resistance with no cracking, chipping, or peeling per NSF/ANSI 51-2002 Method 10.2. E-coated aluminum microchannel coils shall be capable of withstanding a 10,000-hour salt spray test in accordance with the ASTM (American Society for Testing and Materials) (U.S.A.) B-117 Standard.

b. Aluminum fin/copper-tube coils:

Coil shall be constructed of seamless copper tubes mechanically bonded to aluminum fins. Fins shall have wavy enhancements. These coils are not recommended for corrosive environments.

c. E-coated aluminum-fin coils:

Shall have a flexible epoxy polymer coating uniformly applied to all coil surface areas without material bridging between fins. Coating process shall ensure complete coil encapsulation. Color shall be high gloss black with gloss — 60° of 65-90% per ASTM D523-89. Uniform dry film thickness from 0.8 to 1.2 mil on all surface areas including fin edges. Superior hardness characteristics of 2H per ASTM D3363-92A and cross hatch adhesion of 4B-5B per ASTM D3359-93. Impact resistance shall be up to 160 in./lb (ASTM D2794-93). Humidity and water immersion resistance shall be up to minimum 1000 and 250 hours respectively (ASTM D2247-92 and ASTM D870-92). E-coated aluminum-fin coils shall be capable of withstanding a 10,000-hour salt spray test in accordance with the ASTM (American Society for Testing and Materials) (U.S.A.) B-117 Standard. Coil construction shall be aluminum fins mechanically bonded to copper tubes.

NOTE: Whenever the condenser coil is specified as aluminum fin, copper-tube coils, it shall not be acceptable to have any microchannel coil at any location on the chiller, including the VFD cooling system.

d. Due to chiller clearance and serviceability considerations, all coil headers shall be on the same side of the unit.

4. Energy Management Module:

A factory or field-installed module shall provide the following energy management capabilities: 4 to 20 mA signals for leaving fluid temperature reset, cooling set point reset or demand limit control; 2-step demand limit control (from 0% to 100%) activated by a remote contact closure; and discrete input for "Ice Done" indication for ice storage system interface. When a factory-installed version of this device is selected, a GFI convenience outlet is also included.

5. Condenser Coil Trim Panels:

Unit shall be supplied with factory-installed or field-installed coil covers. Factory-installed coil trim panels are not available when a factory-installed full hail guard is selected.

6. LonWorks®[1] Translator:

Unit shall be supplied with factory or field-installed interface between the chiller and a Local Operating Network (LON, i.e., LonWorks FT-10A ANSI/EIA-709.1). Field programming shall be required.

7. Isolation Valve Option:

Unit shall be supplied with factory-installed isolation valve which provides a means of isolating the compressors from the evaporator vessel, which is beneficial in servicing the chiller. The isolation option comes in various configurations depending on the installation region (Middle Eastern or elsewhere). On all units which are not installed in the Middle East region, a liquid line service valve and a motorized discharge isolation valve are always provided per refrigerant circuit. For Middle Eastern regions only, a manual discharge valve is standard and a motorized discharge ball valve is optional. The selection of the isolation valve option results in chillers which are equipped with a liquid line service valve, a discharge service valve (motorized or manual type), and a series of valves on or near the evaporator. The net effect is to provide isolation capability in the condenser area, the evaporator area and the compressor area.

NOTE: The only situation in which the isolation of the condenser area allows the full charge to be stored in the condenser is when round tube, plate fin (RTPF) coils are employed.

8. Suction Line Insulation:

Unit shall be supplied with suction line insulation. Insulation shall be tubular closed-cell insulation. This option shall be required with applications with leaving fluid temperatures below 30°F (–1.1°C) and recommended for areas of high dewpoints where condensation may be a concern.

9. ECM Fans:

Unit shall be equipped with factory-installed fans employing electronically commutated motors to increase fan efficiency when compared to standard fan motors while also proving variable speed fan output.

10. PM Compressor Motor:

Unit shall be equipped with factory-installed permanent magnet compressor motors to provide an increase in motor efficiency when compared to standard compressor motors.

11. Control Transformer:

Unit shall be supplied with a factory-installed transformer that will allow supply control circuit power from the main unit power supply. This is automatically provided on 50 Hz chillers.

1. Third-party trademarks and logos are the property of their respective owners.

12. GFI Convenience Outlet:

    Shall be field-installed and mounted with easily accessible 115-v female receptacle. Shall include 4-amp GFI (ground fault interrupt) receptacle. Not available with 380-v units. This item is automatically included when a factory-installed energy management module is selected.

13. High SCCR (Short Circuit Current Rating):

    The optional high SCCR (short circuit current rating) device shall allow the chiller to tolerate a 65 kA (all voltages except 575-v) or a 35 kA (575-v units) short circuit current for a brief period of time while protecting downstream components. The high SCCR option shall provide a higher level of protection than the standard unit. At 208/230-v, this option is only available with the combination of dual point power and unit sizes 140-200. For unit sizes 350-500, when dual-point power is selected, two molded case switches will be provided, and non-fused disconnects are not available.

14. One-Pass Evaporator:

    Unit shall be equipped with one-pass evaporator heads with reduced water-side pressure drop for series flow dual chiller control or high chilled water flow applications.

15. Three-Pass Evaporator:

    Unit shall be equipped with a 3-pass evaporator to provide greater ability to operate in low evaporator water flow applications. This is particularly beneficial in variable-flow applications.

16. Evaporator for Brine Application:

    Unit shall be equipped with a factory-installed evaporator for applications employing ethylene glycol or propylene glycol in the chilled-fluid loop and which have leaving-fluid temperatures down to 20°F (–6.7°C).

17. Evaporator for Process Brine Application:

    Unit shall be equipped with a factory-installed evaporator for applications employing ethylene glycol or propylene glycol in the chilled-fluid loop and which have leaving-fluid temperatures down to 10°F (–12.2°C).

18. Remote Evaporator:

    Unit shall be provided with an evaporator for applications in which the evaporator will not be an integral part of the chiller package. When this factory-installed option is chosen, the chiller will be shipped from the factory minus the evaporator and without refrigerant. The evaporator itself will be shipped separately with a nitrogen charge and a remote evaporator assembly kit to assist in the installation process. The refrigerant must be acquired and charged locally. The piping from the chiller to the evaporator is not part of the factory supply and is the responsibility of the installing contractor. All coil types are available when a remote evaporator is employed, but see the remote evaporator assembly kit for more detail as well as general installation guidelines.

19. Remote Evaporator Assembly Kit:

    The remote evaporator assembly kit provides the installation guidelines for applications in which the evaporator is not an integral part of the chiller. For such applications, the refrigerant must be acquired and charged locally. The piping from the chiller to the evaporator is the responsibility of the installing contractor. This assembly kit, which includes some hardware as well as assembly instructions, is automatically included when the remote evaporator option is selected.

20. High-Static Fans:

    Unit shall be equipped with factory-installed condenser fans which provide up to 100 Pa ESP (external static pressure), as opposed to the standard fans which provide up to 50 Pa ESP. The high-static fan option is only available on applications employing variable speed condenser fans.

21. Two-Piece Shipment:

    Unit shall be factory-assembled in 2 sections to facilitate convenient shipping of large 30XV models such that both resulting sections can fit within 45-foot containers. This factory-installed option is only available on unit sizes 400H, 450M, 450H, 500S and 500M.

22. Security Grilles:

    Unit shall be provided with factory (or field) installed painted grilles to protect the condenser, evaporator, and compressor.

23. Security Grilles (Sides) and Hail Guard (Ends):

    Unit shall be equipped with a factory-installed option consisting of louvered panels on the ends of the machine down to the bottom of the control panel and security grilles on the sides of the machine. These coverings shall firmly fasten to the machine frame and provide side coverage from the top to the bottom of the unit. Both security grilles and hail guards are available individually, but neither of these individual items is the same design as this factory option. Hail guards also provide the functionality of wind baffles.

24. Full Hail Guard:

    Unit shall be equipped with factory or field-installed louvered panels on the sides and ends of the machine which firmly fasten to the machine frame. These panels shall cover the unit sides from top to bottom and the unit ends down to the bottom of the control panel, thus negating any need for coil trim panels. For all chillers which are designed with vertical coils on the outside of the unit, full hail guard coverage shall be required to protect the unit from

exposure to the elements. Hail guards also provide the functionality of wind baffles.

25. Low Sound Kit:

    Unit shall be provided with factory-installed sheet metal enclosures with sound-absorbing panels for each compressor as well as an external muffler between each compressor and its associated oil separator.

26. Sound Optimization:

    Unit shall be selected with customized software to best meet customer sound and capacity requirements.

27. Dual Chiller Accessory Kit:

    For dual chiller applications (with units piped in parallel), unit shall be provided with the additional hardware (thermistors, wells, connectors) required for proper system operation.

28. Display Heater for Control Panel:

    Shall be a field-installed device which provides ambient heat to the area surrounding the Carrier controller where the installation is subject to extremely low ambient conditions (below –4°F [–20°C]) for extended periods of time.

29. Seismic Certification

    A seismic unit modification is available which will result in a unit SDS (seismic design acceleration parameter) of 2.0.

30. Free Cooling:

    When free cooling is employed, the following is applicable:

    a. The free cooling section shall be physically independent from the mechanical cooling portion of the chiller, thus allowing for a customizable amount of free cooling to be added to best meet customer requirements.

    b. The free cooling section shall have a 3-way valve (with actuator) at the inlet and both a shutoff valve and a check valve on the part of the internal piping which returns from the coils. The three-way valve at the inlet shall allow chilled fluid to flow through the free cooling coils when there is a call for free cooling operation, and the valve will allow flow to pass directly through the free cooling section and on to the evaporator when there is no call for free cooling. The flow/routing decision shall be accomplished by the unit controls, with no user intervention required.

    c. The free cooling section shall have the ability to be active in both stand-alone and hybrid applications. In all operational situations, regardless of piping configuration, the fluid leaving the free cooling section will enter the evaporator, and the evaporator will always actively monitor the system set point (the chiller will run as needed so that the system cooling load is satisfied).

    d. All free cooling sizes shall have the flexibility to be piped in series or in parallel. Series has the advantage of maximizing free cooling capacity, while parallel has the advantage of lower fluid-side pressure drop. The computerized selection program will deliver different choices allowing the customer to decide which size and piping layout is the best fit for the application.

    e. The initiation of free cooling operation shall be based upon outdoor air temperature, and the temperature at which free cooling operation begins shall be customizable.

    f. Free cooling operation shall be attainable with ambient temperatures down to –20°F (–29°C) without any modification to the free cooling section.

    g. The free cooling coils shall be physically independent from the mechanical cooling coils. Some of the considerations are:

    Efficiency:

    - Lower airflow pressure drop for fans to overcome: when coils are stacked (built-in dry cooler), the fans will need to work harder to overcome the pressure drop created by free cooling coils + mechanical cooling coils.
    - Free cooling only mode: unwanted air will flow through the mechanical cooling coils with the stacked coil design, and the fans will have to overcome that pressure drop even though the mechanical cooling coils will not be operational.
    - Mechanical cooling only mode: unwanted air will flow through the free cooling coils with the stacked coil design, and the fans will have to overcome that pressure drop although the free cooling coils will not be operational.
    - When operating in hybrid cooling mode (Mechanical + Free Cooling operating at the same time): the chiller with stacked coils will have to lower the speed of the fans to avoid chiller shutdown due to low head pressure, and, as a consequence, the free cooling capacity of the chiller will be negatively impacted. With independent coils, the fans in the free cooling section will run at maximum RPM to optimize the free cooling capacity, while, simultaneously, the fans for the mechanical cooling coils will run at significantly reduced RPM to respect the head pressure limits while maximizing efficiency for the mechanical cooling portion.

    Serviceability:

    - There will be no potential to trap debris between the coils when the coils are physically independent from each other. Cleaning the debris stuck between coils is a labor

intense activity and will require the whole system to be shutdown.

- Free cooling coils (if independent from the mechanical cooling coils) can be cleaned while the chiller is operating (for instance, during the warm weather season when no free cooling is available).
- Mechanical cooling coils (if independent from the free cooling coils) can be cleaned while the chiller is operating (for instance, during the cold weather season when no mechanical cooling is required).

h. Free cooling coils shall be constructed of seamless copper tubes mechanically bonded to aluminum fins (aluminum fin/copper tube coils). Fins shall have wavy enhancements. The use of a free cooling section, however, shall not infringe upon the customer's ability to independently choose the mechanical cooling coil configuration (the customer may choose MCHX or Al/Cu for the mechanical cooling configuration).

i. In corrosive environments, the free cooling coils shall be as described above and shall additionally have a flexible epoxy coating uniformly applied to all surface areas without material bridging between fins (E-coated aluminum-fin coils). The coating process shall ensure complete coil encapsulation. Color shall be high gloss black with gloss - 60° of 65-90% per ASTM D523-89. Uniform dry film thickness shall be from 0.8 to 1.2 mil on all surface areas including fin edges. Superior hardness characteristics of 2H per ASTM D3363-92A and cross hatch adhesion of 4B-5B per ASTM D3359-93. Impact resistance shall be up to 160 in./lb (ASTM D2794-93). Humidity and water immersion resistance shall be up to minimum 1000 and 250 hours respectively (ASTM D2247-92 and ASTM D870-92). E-coated aluminum-fin coils shall be capable of withstanding an 8000-hour salt spray test in accordance with the ASTM (American Society for Testing and Materials) (U.S.A.) B-117 Standard.

j. Free cooling fans shall be variable-speed, 9-blade airfoil cross-section, reinforced polymer construction, shrouded-axial type, and shall be statically and dynamically balanced with inherent corrosion resistance. Free cooling fan speed shall be independent of the speed of the condenser fans, with both fan speeds being potentially different from each other and tuned to maximize overall package efficiency. Fans shall discharge air vertically upward.

k. Each fan circuit shall have a factory-installed, independent variable speed drive with display. Variable speed drives shall be rated IP-55 enclosures and be UL Listed. All VFDs shall be fully air cooled and shall not require an additional glycol cooling system, thus avoiding the maintenance associated with such cooling systems.

l. Thermistors, measuring the temperature of the chilled fluid entering and leaving the free cooling section, shall be field-installed.

m. The control of the free cooling section shall be supervised by the main chiller controller, and there is no need for the user to control the free cooling section separately.

n. Only one separate, dedicated electrical power connection to the free cooling section shall be required, and the voltage will be the same as the main unit, three-phase electrical power. No additional control power source shall be required since this power is provided by a factory-supplied control power transformer.

o. To improve the serviceability of the free-cooling coils, there shall be a removable cover on all coil sections, conveniently allowing for cleaning from inside out.