19XR
Hermetic Centrifugal Liquid Chillers
50/60 Hz
With HFC-134a

Start-Up, Operation, and Maintenance Instructions

SAFETY CONSIDERATIONS

Centrifugal liquid chillers are designed to provide safe and reliable service when operated within design specifications. When operating this equipment, use good judgment and safety precautions to avoid damage to equipment and property or injury to personnel.

Be sure you understand and follow the procedures and safety precautions contained in the chiller instructions as well as those listed in this guide.

⚠ DANGER

DO NOT VENT refrigerant relief valves within a building. Outlet from rupture disc or relief valve must be vented outdoors in accordance with the latest edition of ANSI/ASHRAE 15 (American National Standards Institute/American Society of Heating, Refrigeration, and Air Conditioning Engineers). The accumulation of refrigerant in an enclosed space can displace oxygen and cause asphyxiation.

PROVIDE adequate ventilation in accordance with ANSI/ASHRAE 15, especially for enclosed and low overhead spaces. Inhalation of high concentrations of vapor is harmful and may cause heart irregularities, unconsciousness, or death. Misuse can be fatal. Vapor is heavier than air and reduces the amount of oxygen available for breathing. Product causes eye and skin irritation. Decomposition products are hazardous.

DO NOT USE OXYGEN to purge lines or to pressurize a chiller for any purpose. Oxygen gas reacts violently with oil, grease, and other common substances.

NEVER EXCEED specified test pressures, VERIFY the allowable test pressure by checking the instruction literature and the design pressures on the equipment nameplate.

DO NOT USE air for leak testing. Use only refrigerant or dry nitrogen.

DO NOT VALVE OFF any safety device.

BE SURE that all pressure relief devices are properly installed and functioning before operating any chiller.

⚠ WARNING

DO NOT WELD OR FLAMECUT any refrigerant line or vessel until all refrigerant *(liquid and vapor)* has been removed from chiller. Traces of vapor should be displaced with dry air or nitrogen and the work area should be well ventilated. *Refrigerant in contact with an open flame produces toxic gases.*

DO NOT USE eyebolts or eyebolt holes to rig chiller sections or the entire assembly.

DO NOT work on high-voltage equipment unless you are a qualified electrician.

DO NOT WORK ON electrical components, including control panels, switches, starters, or oil heater until you are sure ALL POWER IS OFF and no residual voltage can leak from capacitors or solid-state components.

LOCK OPEN AND TAG electrical circuits during servicing. IF WORK IS INTERRUPTED, confirm that all circuits are deenergized before resuming work.

AVOID SPILLING liquid refrigerant on skin or getting it into the eyes. USE SAFETY GOGGLES. Wash any spills from the skin with soap and water. If liquid refrigerant enters the eyes, IMMEDIATELY FLUSH EYES with water and consult a physician.

NEVER APPLY an open flame or live steam to a refrigerant cylinder. Dangerous over pressure can result. When it is necessary to heat refrigerant, use only warm (110 F [43 C]) water.

DO NOT REUSE disposable (nonreturnable) cylinders or attempt to refill them. It is DANGEROUS AND ILLEGAL. When cylinder is emptied, evacuate remaining gas pressure, loosen the collar and unscrew and discard the valve stem. DO NOT INCINERATE.

CHECK THE REFRIGERANT TYPE before adding refrigerant to the chiller. The introduction of the wrong refrigerant can cause damage or malfunction to this chiller.

Operation of this equipment with refrigerants other than those cited herein should comply with ANSI/ASHRAE-15 (latest edition). Contact Carrier for further information on use of this chiller with other refrigerants.

DO NOT ATTEMPT TO REMOVE fittings, covers, etc., while chiller is under pressure or while chiller is running. Be sure pressure is at 0 psig (0 kPa) before breaking any refrigerant connection.

CAREFULLY INSPECT all relief devices, rupture discs, and other relief devices AT LEAST ONCE A YEAR. If chiller operates in a corrosive atmosphere, inspect the devices at more frequent intervals.

DO NOT ATTEMPT TO REPAIR OR RECONDITION any relief device when corrosion or build-up of foreign material (rust, dirt, scale, etc.) is found within the valve body or mechanism. Replace the device.

DO NOT install relief devices in series or backwards.

USE CARE when working near or in line with a compressed spring. Sudden release of the spring can cause it and objects in its path to act as projectiles.

⚠ CAUTION

DO NOT STEP on refrigerant lines. Broken lines can whip about and release refrigerant, causing personal injury.

DO NOT climb over a chiller. Use platform, catwalk, or staging. Follow safe practices when using ladders.

USE MECHANICAL EQUIPMENT (crane, hoist, etc.) to lift or move inspection covers or other heavy components. Even if components are light, use mechanical equipment when there is a risk of slipping or losing your balance.

BE AWARE that certain automatic start arrangements CAN ENGAGE THE STARTER, TOWER FAN, OR PUMPS. Open the disconnect *ahead of* the starter, tower fans, or pumps.

USE only repair or replacement parts that meet the code requirements of the original equipment.

DO NOT VENT OR DRAIN waterboxes containing industrial brines, liquid, gases, or semisolids without the permission of your process control group.

DO NOT LOOSEN waterbox cover bolts until the waterbox has been completely drained.

DOUBLE-CHECK that coupling nut wrenches, dial indicators, or other items have been removed before rotating any shafts.

DO NOT LOOSEN a packing gland nut before checking that the nut has a positive thread engagement.

PERIODICALLY INSPECT all valves, fittings, and piping for corrosion, rust, leaks, or damage.

PROVIDE A DRAIN connection in the vent line near each pressure relief device to prevent a build-up of condensate or rain water.

Manufacturer reserves the right to discontinue, or change at any time, specifications or designs without notice and without incurring obligations.

CONTENTS

Page

SAFETY CONSIDERATIONS 1
INTRODUCTION 4
ABBREVIATIONS AND EXPLANATIONS 4
CHILLER FAMILIARIZATION 5-7
Chiller Information Plate 5
System Components 5
Cooler 5
Condenser 5
Motor-Compressor 5
Control Center 5
Factory-Mounted Starter (Optional) 7
Storage Vessel (Optional) 7
REFRIGERATION CYCLE 7
MOTOR/OIL REFRIGERATION COOLING CYCLE 7,8
LUBRICATION CYCLE 8
Summary 8
Details 8
Oil Reclaim System 8
- PRIMARY OIL RECOVERY MODE
- SECONDARY OIL RECOVERY METHOD

STARTING EQUIPMENT 8-10
Unit-Mounted Solid-State Starter (Optional) 9
Unit-Mounted Wye-Delta Starter (Optional) 10
CONTROLS 10-36
Definitions 10
- ANALOG SIGNAL
- DIGITAL SIGNAL
- VOLATILE MEMORY

General 10
PIC System Components 10
- PROCESSOR MODULE (PSIO)
- STARTER MANAGEMENT MODULE (SMM)
- LOCAL INTERFACE DEVICE (LID)
- 6-PACK RELAY BOARD
- 8-INPUT MODULES
- OIL HEATER CONTACTOR (1C)
- OIL PUMP CONTACTOR (2C)
- HOT GAS BYPASS CONTACTOR RELAY (3C) (Optional)
- CONTROL TRANSFORMERS (T1, T2, T4)
- OIL DIFFERENTIAL PRESSURE/POWER SUPPLY
- CONTROL AND OIL HEATER VOLTAGE SELECTOR (S1)

LID Operation and Menus 13
- GENERAL
- ALARMS AND ALERTS
- LID DEFAULT SCREEN MENU ITEMS
- MENU STRUCTURE
- TO VIEW POINT STATUS
- OVERRIDE OPERATIONS
- TIME SCHEDULE OPERATION
- TO VIEW AND CHANGE SET POINTS
- SERVICE OPERATION

PIC System Functions 26
- CAPACITY CONTROL
- ENTERING CHILLED WATER CONTROL
- DEADBAND
- PROPORTIONAL BANDS AND GAIN
- DEMAND LIMITING
- CHILLER TIMERS
- OCCUPANCY SCHEDULE

Safety Controls 26
Shunt Trip (Option) 28
Default Screen Freeze 28
Ramp Loading Control 28

Page

Capacity Override 28
High Discharge Temperature Control 29
Oil Sump Temperature Control 29
Oil Cooler 29
Remote Start/Stop Controls 29
Spare Safety Inputs 29
Spare Safety Alarm Contacts 29
Condenser Pump Control 29
Condenser Freeze Prevention 29
Tower Fan Relay 29
Auto. Restart After Power Failure 30
Water/Brine Reset 30
- RESET TYPE 1: REQUIRES AN OPTIONAL 8-INPUT MODULE
- RESET TYUPE 2: REQUIRES AN OPTIONAL 8-INPUT MODULE
- RESET TYPE 3

Demand Limit Control Option (Requires Optional 8-Input Module) 30
Surge Prevention Algorithm 30
Surge Protection 31
Lead/Lag Control 31
- COMMON POINT SENSOR INSTALLATION
- CHILLER COMMUNICATION WIRING
- LEAD/LAG OPERATION
- FAULTED CHILLER OPERATION
- LOAD BALANCING
- AUTO RESTART AFTER POWER FAILURE

Ice Build Control 33
- ICE BUILD INITIATION
- START-UP/RECYCLE OPERATION
- TEMPERATURE CONTROL DURING ICE BUILD
- TERMINATION OF ICE BUILD
- RETURN TO NON-ICE BUILD OPERATIONS

Attach to Network Device Control 34
- ATTACHING TO OTHER CCN MODULES

Service Operation 35
- TO LOG ON
- TO LOG OFF
- HOLIDAY SCHEDULING

START-UP/SHUTDOWN/RECYCLE SEQUENCE 36,37
Local Start-Up 36
Shutdown Sequence 36
Automatic Soft Stop Amps Threshold 37
Chilled Water Recycle Mode 37
Safety Shutdown 37
BEFORE INITIAL START-UP 37-48
Job Data Required 37
Equipment Required 37
Using the Optional Storage Tank and Pumpout System 38
Remove Shipping Packaging 38
Open Oil Circuit Valves 38
Tighten All Gasketed Joints and Guide Vane Shaft Packing 38
Check Chiller Tightness 38
Refrigerant Tracer 38
Leak Test Chiller 38
Standing Vacuum Test 41
Chiller Dehydration 41
Inspect Water Piping 43
Check Optional Pumpout Compressor Water Piping 43
Check Relief Devices 43
Inspect Wiring 43
Carrier Comfort Network Interface 44

CONTENTS (cont)

Page

Check Starter 44
- MECHANICAL STARTER
- BENSHAW, INC. SOLID-STATE STARTER

Oil Charge 44
Power Up the Controls and Check the Oil Heater 44
- SOFTWARE VERSION

Set Up Chiller Control Configuration 45
Input the Design Set Points 45
Input the Local Occupied Schedule (OCCPC01S) 45
Input Service Configurations 45
- PASSWORD
- INPUT TIME AND DATE
- CHANGE LID CONFIGURATION IF NECESSARY
- MODIFY CONTROLLER IDENTIFICATION IF NECESSARY
- INPUT EQUIPMENT SERVICE PARAMETERS IF NECESSARY
- MODIFY EQUIPMENT CONFIGURATION IF NECESSARY
- CHECK VOLTAGE SUPPLY
- PERFORM AN AUTOMATED CONTROL TEST

Check Optional Pumpout System Controls and Compressor 47
High Altitude Locations 47
Charge Refrigerant Into Chiller 47
- 19XR CHILLER EQUALIZATION WITHOUT PUMPOUT UNIT
- 19XR CHILLER EQUALIZATION WITH PUMPOUT UNIT
- TRIMMING REFRIGERANT CHARGE

INITIAL START-UP 48-50
Preparation 48
Manual Operation of the Guide Vanes 49
Dry Run to Test Start-Up Sequence 49
Check Rotation 49
- IF ROTATION IS PROPER
- IF THE MOTOR ROTATION IS NOT CLOCKWISE

Check Oil Pressure and Compressor Stop 49
Calibrate Motor Current Demand Setting 49
To Prevent Accidental Start-Up 49
Check Chiller Operating Condition 50
Instruct the Customer Operator 50
- COOLER-CONDENSER
- OPTIONAL PUMPOUT STORAGE TANK AND PUMPOUT SYSTEM
- MOTOR COMPRESSOR ASSEMBLY
- MOTOR COMPRESSOR LUBRICATION SYSTEM
- CONTROL SYSTEM
- AUXILIARY EQUIPMENT
- DESCRIBE CHILLER CYCLES
- REVIEW MAINTENANCE
- SAFETY DEVICES AND PROCEDURES
- CHECK OPERATOR KNOWLEDGE
- REVIEW THE START-UP, OPERATION, AND MAINTENANCE MANUAL

OPERATING INSTRUCTIONS 50,51
Operator Duties 50
Prepare the Chiller for Start-Up 50
To Start the Chiller 50
Check the Running System 50
To Stop the Chiller 50
After Limited Shutdown 51

Page

Extended Shutdown 51
After Extended Shutdown 51
Cold Weather Operation 51
Manual Guide Vane Operation 51
Refrigeration Log 51

PUMPOUT AND REFRIGERANT TRANSFER PROCEDURES 51-55
Preparation 51
Operating the Optional Pumpout Unit 51
- TO READ REFRIGERANT PRESSURES

Chillers with Storage Tanks 53
- TRANSFER REFRIGERANT FROM PUMPOUT STORAGE TANK TO CHILLER
- TRANSFER THE REFRIGERANT FROM CHILLER TO PUMPOUT STORAGE TANK

Chillers with Isolation Valves 54
- TRANSFER ALL REFRIGERANT TO CHILLER CONDENSER VESSEL
- TRANSFER ALL REFRIGERANT TO CHILLER COOLER VESSEL
- RETURN REFRIGERANT TO NORMAL OPERATING CONDITIONS

GENERAL MAINTENANCE 55,56
Refrigerant Properties 55
Adding Refrigerant 55
Removing Refrigerant 55
Adjusting the Refrigerant Charge 55
Refrigerant Leak Testing 55
Leak Rate 55
Test After Service, Repair, or Major Leak 55
- REFRIGERANT TRACER
- TO PRESSURIZE WITH DRY NITROGEN

Repair the Leak, Retest, and Apply Standing Vacuum Test 55
Checking Guide Vane Linkage 55
Trim Refrigerant Charge 56

WEEKLY MAINTENANCE 56
Check the Lubrication System 56

SCHEDULED MAINTENANCE 56-59
Service Ontime 56
Inspect the Control Center 56
Check Safety and Operating Controls Monthly 56
Changing Oil Filter 56
Oil Specification 57
Oil Changes 57
- TO CHANGE THE OIL

Refrigerant Filter 57
Oil Reclaim Filter 57
Inspect Refrigerant Float System 57
Inspect Relief Valves and Piping 57
Compressor Bearing and Gear Maintenance 57
Inspect the Heat Exchanger Tubes 58
- COOLER
- CONDENSER

Water Leaks 58
Water Treatment 58
Inspect the Starting Equipment 58
Check Pressure Transducers 58
Optional Pumpout System Maintenance 58
- OPTIONAL PUMPOUT COMPRESSOR OIL CHARGE
- OPTIONAL PUMPOUT SAFETY CONTROL SETTINGS

Ordering Replacement Chiller Parts 59

CONTENTS (cont)

Page

TROUBLESHOOTING GUIDE 59-89
Overview 59
Checking the Display Messages 59
Checking Temperature Sensors 59
• RESISTANCE CHECK
• VOLTAGE DROP
• CHECK SENSOR ACCURACY
• DUAL TEMPERATURE SENSORS
Checking Pressure Transducers 60
• COOLER AND CONDENSER PRESSURE CALIBRATION
• OIL DIFFERENTIAL PRESSURE/POWER SUPPLY MODULE CALIBRATION
• TRANSDUCER REPLACEMENT
Control Algorithms Checkout Procedure 61
Control Test 61
Control Modules 71
• RED LED
• GREEN LEDs

Page

Notes on Module Operation 71
Processor Module (PSIO) 72
• INPUTS
• OUTPUTS
Starter Management Module (SMM) 72
• INPUTS
• OUTPUTS
Options Modules (8-Input) 72
Replacing Defective Processor Modules 73
• INSTALLATION
Solid-State Starters 74
• TESTING SILICON CONTROL RECTIFIERS IN BENSHAW, INC. SOLID-STATE STARTERS
Physical Data 77
INDEX 90,91
INITIAL START-UP CHECKLIST FOR 19XR HERMETIC CENTRIFUGAL LIQUID CHILLER . . . . . CL-1 to CL-12

INTRODUCTION

Prior to initial start-up of the 19XR unit, those involved in the start-up, operation, and maintenance should be thoroughly familiar with these instructions and other necessary job data. This book is outlined so that you may become familiar with the control system before performing start-up procedures. Procedures in this manual are arranged in the sequence required for proper chiller start-up and operation.

⚠ WARNING

This unit uses a microprocessor control system. Do not short or jumper between terminations on circuit boards or modules; control or board failure may result.

Be aware of electrostatic discharge (static electricity) when handling or making contact with circuit boards or module connections. Always touch a chassis (grounded) part to dissipate body electrostatic charge before working inside control center.

Use extreme care when handling tools near boards and when connecting or disconnecting terminal plugs. Circuit boards can easily be damaged. Always hold boards by the edges and avoid touching components and connections.

This equipment uses, and can radiate, radio frequency energy. If not installed and used in accordance with the instruction manual, it may cause interference to radio communications. It has been tested and found to comply with the limits for a Class A computing device pursuant to Subpart J of Part 15 of FCC Rules, which are designed to provide reasonable protection against such interference when operated in a commercial environment. Operation of this equipment in a residential area is likely to cause interference, in which case the user, at his own expense, will be required to take whatever measures may be required to correct the interference.

Always store and transport replacement or defective boards in anti-static shipping bag.

ABBREVIATIONS AND EXPLANATIONS

Frequently used abbreviations in this manual include:

CCN	—	Carrier Comfort Network
CCW	—	Counterclockwise
CW	—	Clockwise
ECW	—	Entering Chilled Water
ECDW	—	Entering Condenser Water
EMS	—	Energy Management System
HGBP	—	Hot Gas Bypass
I/O	—	Input/Output
LCD	—	Liquid Crystal Display
LCDW	—	Leaving Condenser Water
LCW	—	Leaving Chilled Water
LED	—	Light-Emitting Diode
LID	—	Local Interface Device
OLTA	—	Overload Trip Amps
PIC	—	Product Integrated Control
PSIO	—	Processor Sensor Input/Output Module
RLA	—	Rated Load Amps
SCR	—	Silicon Control Rectifier
SI	—	International System of Units
SMM	—	Starter Management Module
TXV	—	Thermostatic Expansion Valve

Words printed in all capital letters or in italics may be viewed on the LID.

The PSIO software version number of your 19XR unit will be located on the PSIO module.

CHILLER FAMILIARIZATION (Fig. 1 and 2)

Chiller Information Plate — The information plate is located on the right side of the chiller control center panel.

System Components — The components include the cooler and condenser heat exchangers in separate vessels, motor-compressor, lubrication package, control center, and motor starter. All connections from pressure vessels have external threads to enable each component to be pressure tested with a threaded pipe cap during factory assembly.

Cooler — This vessel (also known as the evaporator) is located underneath the compressor. The cooler is maintained at lower temperature/pressure so that evaporating refrigerant can remove heat from water flowing through its internal tubes.

Condenser — The condenser operates at a higher temperature/pressure than the cooler and has water flowing through its internal tubes in order to remove heat from the refrigerant.

Motor-Compressor — This component maintains system temperature/pressure differences and moves the heat carrying refrigerant from the cooler to the condenser.

Control Center — The control center is the user interface for controlling the chiller. It regulates the chiller's capacity as required to maintain proper leaving chilled water temperature. The control center:

- registers cooler, condenser, and lubricating system pressures
- shows chiller operating condition and alarm shutdown conditions
- records the total chiller operating hours
- sequences chiller start, stop, and recycle under microprocessor control
- provides access to other CCN (Carrier Comfort Network) devices

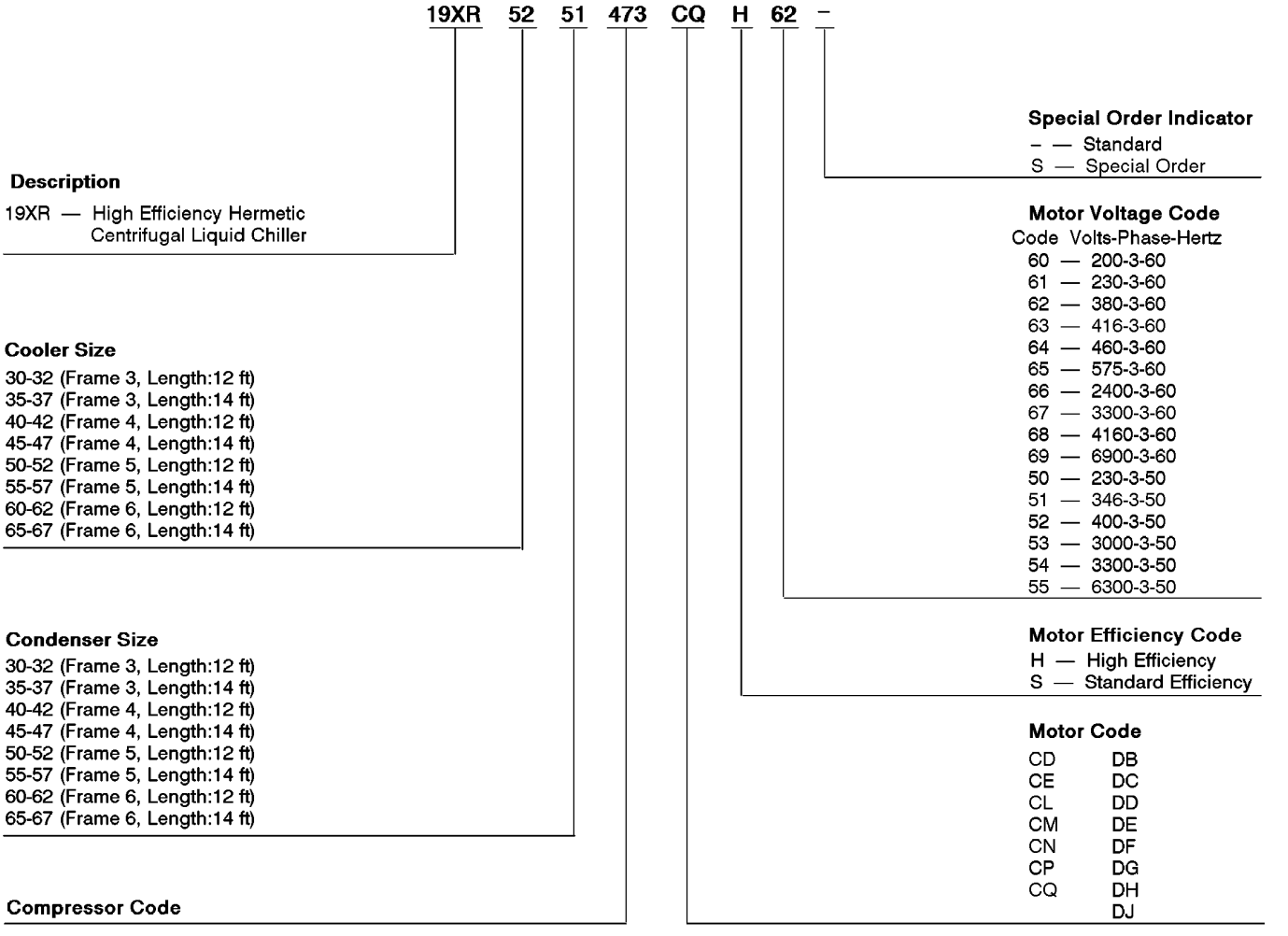

MODEL NUMBER NOMENCLATURE

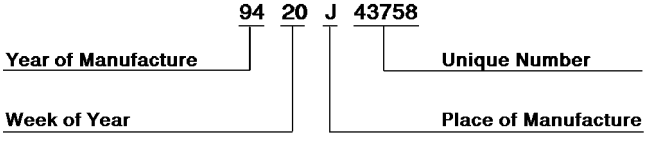

SERIAL NUMBER BREAKDOWN

Fig. 1 — 19XR Identification

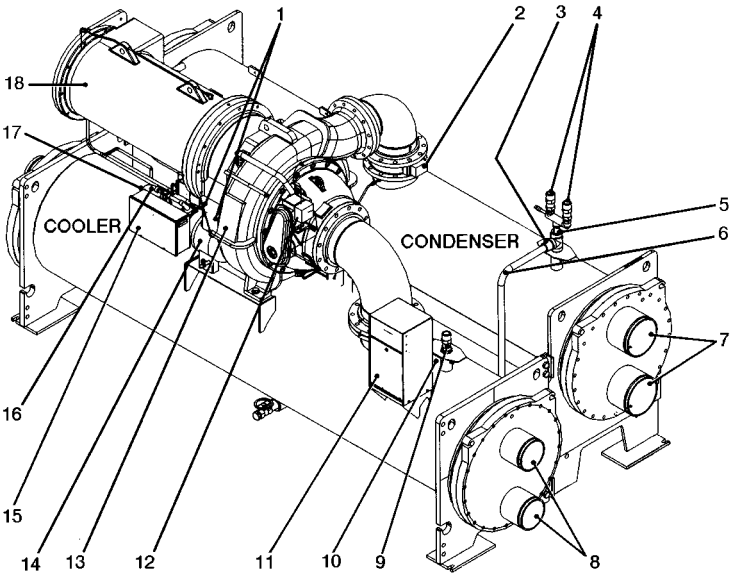

FRONT TOP VIEW

1 — Oil Level Sight Glasses
2 — Discharge Isolation Valve
3 — Condenser Pumpout Connection
4 — Condenser Safety Relief Valves
5 — Three-Way Condenser Relief Valve
6 — Hot Gas Bypass Line
7 — Condenser Waterbox Nozzles
8 — Cooler Waterbox Nozzles
9 — Cooler Safety Relief Valve
10 — Cooler Pumpout Connection
11 — Control Panel
12 — Guide Vane Actuator
13 — Compressor/Transmission
14 — Oil Pump
15 — Power Panel
16 — Oil Filter Isolation Valve
17 — Oil Filter
18 — Motor

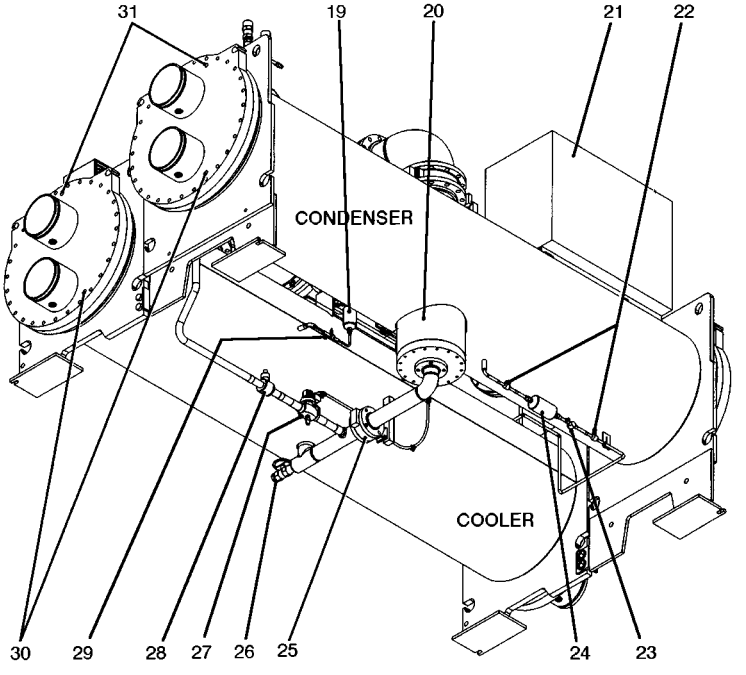

BOTTOM REAR VIEW

19 — Oil Reclaim Filter
20 — Float Chamber
21 — Unit-Mounted Starter
22 — Refrigerant Filter/Drier Isolation Valves
23 — Sight Glass/Moisture Indicator
24 — Filter/Drier
25 — Cooler Liquid Line Isolation Valve
26 — Refrigerant Charging Valve
27 — Hot Gas Bypass Solenoid (Option)
28 — Hot Gas Bypass Isolation Valve (Option)
29 — Oil Reclaim Filter Isolation Valve
30 — Waterbox Drains
31 — Waterbox Vents

Fig. 2 — Typical 19XR Components

Factory-Mounted Starter (Optional) — The starter allows for the proper start and disconnect of electrical energy for the compressor-motor, oil pump, oil heater, and control panels.

Storage Vessel (Optional) — There are 2 sizes of storage vessels available. The vessels have double relief valves, a magnetically coupled dial-type refrigerant level gage, a one-inch FPT drain valve, and a ½-in. male flare vapor connection for the pumpout unit.

NOTE: If a storage vessel is not used at the jobsite, factory-installed isolation valves on the chiller may be used to isolate the chiller charge in either the cooler or condenser. An optional pumpout system is used to transfer refrigerant from vessel to vessel.

REFRIGERATION CYCLE

The compressor continuously draws refrigerant vapor from the cooler at a rate set by the amount of guide vane opening. As the compressor suction reduces the pressure in the cooler, the remaining refrigerant boils at a fairly low temperature (typically 38 to 42 F [3 to 6 C]). The energy required for boiling is obtained from the water flowing through the cooler tubes. With heat energy removed, the water becomes cold enough for use in an air conditioning circuit or process liquid cooling.

After taking heat from the water, the refrigerant vapor is compressed. Compression adds still more heat energy, and the refrigerant is quite warm (typically 98 to 102 F [37 to 40 C]) when it is discharged from the compressor into the condenser.

Relatively cool (typically 65 to 90 F [18 to 32 C]) water flowing into the condenser tubes removes heat from the refrigerant and the vapor condenses to liquid.

The liquid refrigerant passes through orifices into the FLASC (Flash Subcooler) chamber (Fig. 3). Since the FLASC chamber is at a lower pressure, part of the liquid refrigerant flashes to vapor, thereby cooling the remaining liquid. The FLASC vapor is recondensed on the tubes which are cooled by entering condenser water. The liquid drains into a float chamber between the FLASC chamber and cooler. Here a float valve forms a liquid seal to keep FLASC chamber vapor from entering the cooler. When liquid refrigerant passes through the valve, some of it flashes to vapor in the reduced pressure on the cooler side. In flashing, it removes heat from the remaining liquid. The refrigerant is now at a temperature and pressure at which the cycle began.

MOTOR/OIL REFRIGERATION COOLING CYCLE

The motor and the lubricating oil are cooled by liquid refrigerant taken from the bottom of the condenser vessel (Fig. 3). Flow of refrigerant is maintained by the pressure differential that exists due to compressor operation. After the refrigerant flows past an isolation valve, an in-line

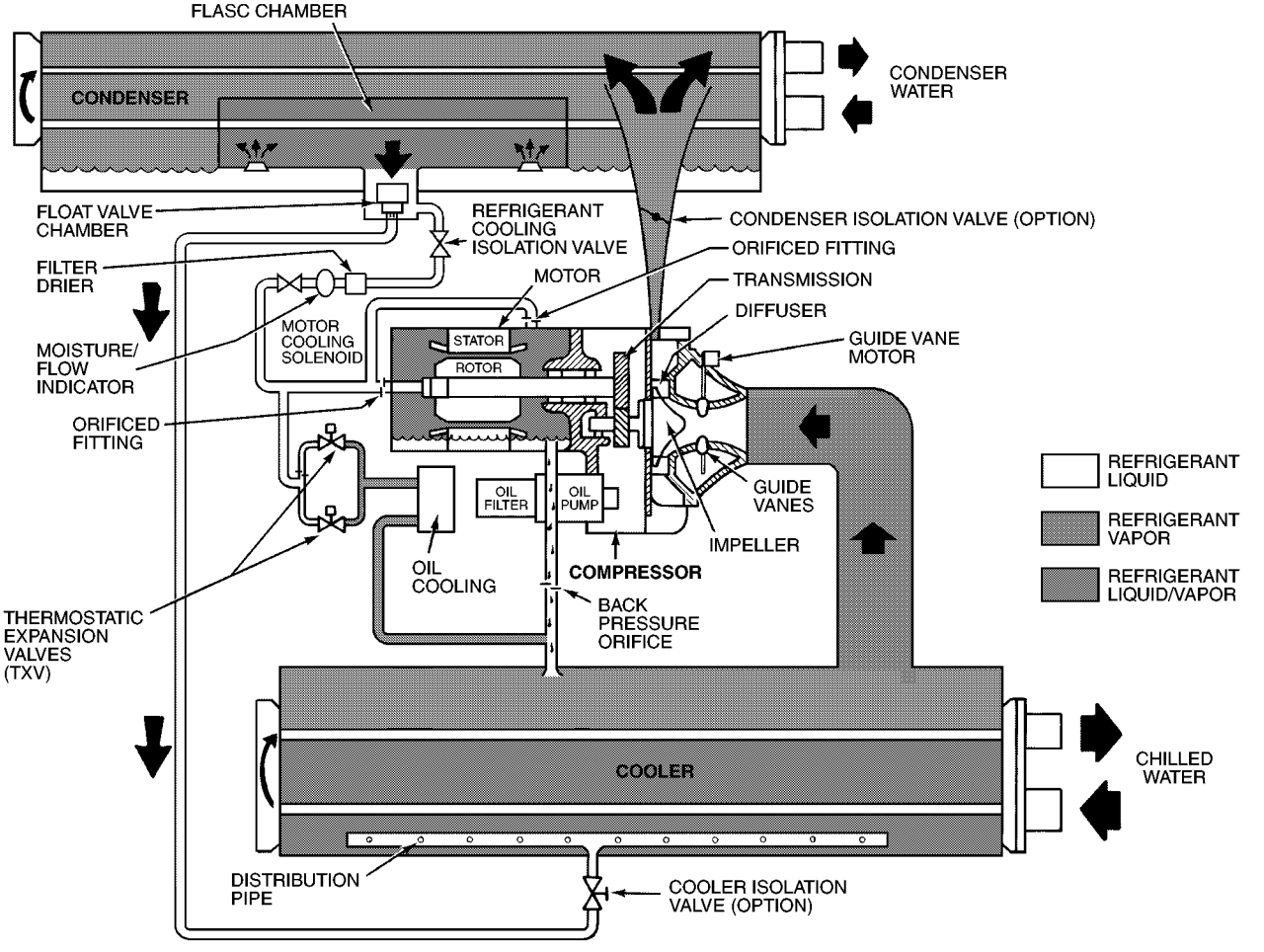

Fig. 3 — Refrigerant Motor Cooling and Oil Cooling Cycles

filter, and a sight glass/moisture indicator, the flow is split between motor cooling and oil cooling systems.

Flow to the motor flows through an orifice and into the motor. Once past the orifice, the refrigerant is directed over the motor by a spray nozzle. The refrigerant collects in the bottom of the motor casing and then is drained back into the cooler through the motor refrigerant drain line. A back pressure valve or an orifice in this line maintains a higher pressure in the motor shell than in the cooler/oil sump. The motor is protected by a temperature sensor imbedded in the stator windings. An increase in motor winding temperature past the motor override set point will override the temperature capacity control to hold, and if the motor temperature rises 10° F (5.5° C) above this set point, will close the inlet guide vanes. If the temperature rises above the safety limit, the compressor will shut down.

Refrigerant that flows to the oil cooling system is regulated by thermostatic expansion valves (TXVs). The TXVs regulate flow into the oil/refrigerant plate and frame-type heat exchanger. The expansion valve bulbs control oil temperature to the bearings. The refrigerant leaving the heat exchanger then returns to the cooler.

LUBRICATION CYCLE

Summary — The oil pump, oil filter, and oil cooler make up a package located partially in the transmission casting of the compressor-motor assembly. The oil is pumped into a filter assembly to remove foreign particles and is then forced into an oil cooler heat exchanger where the oil is cooled to proper operational temperatures. After the oil cooler, part of the flow is directed to the gears and the high speed shaft bearings; the remaining flow is directed to the motor shaft bearings. Oil drains into the transmission oil sump to complete the cycle (Fig. 4).

Details — Oil is charged into the lubrication system through a hand valve. Two sight glasses in the oil reservoir permit oil level observation. Normal oil level is between the middle of the upper sight glass and the top of the lower sight glass when the compressor is shut down. The oil level should be visible in at least one of the 2 sight glasses during operation. Oil sump temperature is displayed on the LID default screen. Oil sump temperature ranges during compressor operation between 125 to 150 F (52 to 66 C).

The oil pump suction is fed from the oil reservoir. An oil pressure relief valve maintains 18 to 25 psid (124 to 172 kPad) differential pressure in the system at the pump discharge. This differential pressure can be read directly from the Local Interface Device (LID) default screen. The oil pump discharges oil to the oil filter assembly. This filter can be closed to permit removal of the filter without draining the entire oil system (see Maintenance sections, pages 55 to 59, for details). The oil is then piped to the oil cooler. This heat exchanger uses refrigerant from the condenser as the coolant. The refrigerant cools the oil to a temperature between 120 and 140 F (49 to 60 C).

As the oil leaves the oil cooler, it passes the oil pressure transducer and the thermal bulb for the refrigerant expansion valve on the oil cooler. The oil is then divided, with a portion flowing to the thrust bearing, forward pinion bearing, and gear spray. The balance then lubricates the motor shaft bearings and the rear pinion bearing. The oil temperature is measured as the oil leaves the thrust and forward journal bearings within the bearing housing. The oil then drains into the oil reservoir at the base of the compressor. The PIC (Product Integrated Control) measures the temperature of the oil in the sump and maintains the temperature during shutdown (see Oil Sump Temperature Control section, page 29). This temperature is read on the LID default screen.

During the chiller start-up, the PIC will energize the oil pump and provide 45 seconds of prelubrication to the bearings after pressure is verified before starting the compressor. During shutdown, the oil pump will run for 60 seconds to post-lubricate after the compressor shuts down. The oil pump can also be energized for testing purposes in the Control Test.

Ramp loading can slow the rate of guide vane opening to minimize oil foaming at start-up. If the guide vanes open quickly, the sudden drop in suction pressure can cause any refrigerant in the oil to flash. The resulting oil foam cannot be pumped efficiently; therefore, oil pressure falls off and lubrication is poor. If oil pressure falls below 15 psid (103 kPad) differential, the PIC will shut down the compressor.

If the controls are subject to a power failure that lasts more than 3 hours, the oil pump will be energized periodically when the power is restored. This helps to eliminate refrigerant that has migrated to the oil sump during the power failure. The controls will energize the pump for 60 seconds every 30 minutes until the chiller is started.

Oil Reclaim System — The oil reclaim system returns oil lost from the compressor housing back to the oil reservoir by recovering the oil from 2 areas on the chiller. The guide vane housing is the primary area of recovery. Oil is also recovered by skimming it from the operating refrigerant level in the cooler vessel.

PRIMARY OIL RECOVERY MODE — Oil is normally recovered through the guide vane housing on the chiller. This is possible because oil is normally entrained with the refrigerant in the chiller. As the compressor pulls the refrigerant up from the cooler into the guide vane housing to be compressed, the oil normally drops out at this point and falls to the bottom of the guide vane housing where it accumulates. Using discharge gas pressure to power an eductor, the oil is drawn from the housing and is discharged into the oil reservoir.

SECONDARY OIL RECOVERY METHOD — The secondary method of oil recovery is significant under light load conditions, when the refrigerant going up to the compressor suction does not have enough velocity to bring oil along with it. Under these conditions, oil normally collects in a greater concentration at the top level of the refrigerant in the cooler. This oil and refrigerant mixture is skimmed from the side of the cooler and is then drawn up to the guide vane housing. There is a filter in this line. Because the guide vane housing pressure is much lower than the cooler pressure, the refrigerant boils off, leaving the oil behind to be collected by the primary oil recovery method.

STARTING EQUIPMENT

The 19XR requires a motor starter to operate the centrifugal hermetic compressor motor, the oil pump, and various auxiliary equipment. The starter serves as the main field wiring interface for the contractor.

See Carrier Specification Z-375 for specific starter requirements. All starters must meet these specifications in order to properly start and satisfy mechanical safety requirements. Starters may be supplied as separate, free-standing units or may be mounted directly on the chiller (unit mounted) for low-voltage units only.

Inside the starter are 3 separate circuit breakers. Circuit breaker CB1 is the compressor motor circuit breaker. The disconnect switch on the starter front cover is connected to this breaker. Circuit breaker CB1 supplies power to the compressor motor.

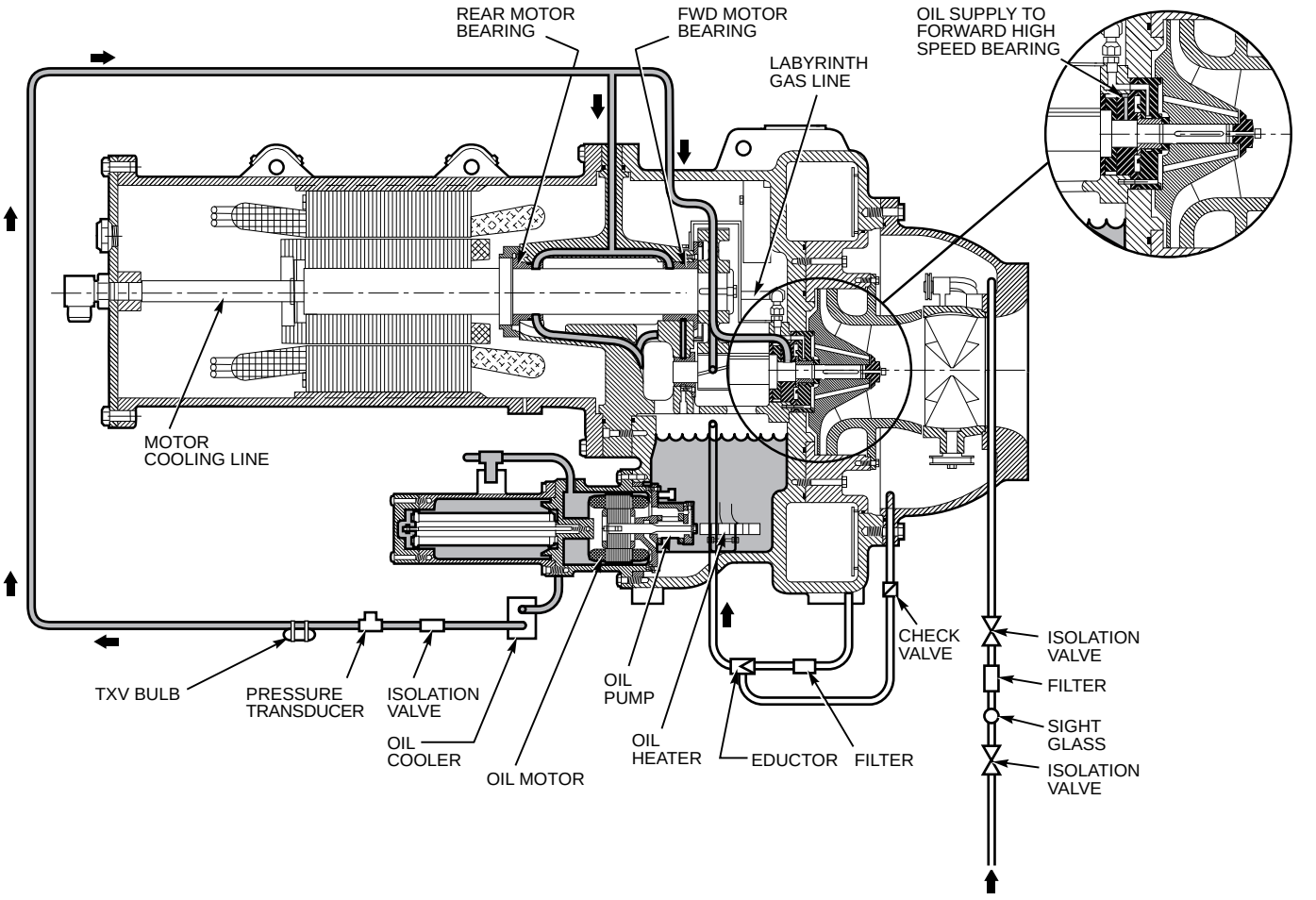

Fig. 4 — Lubrication System

⚠ WARNING

The main circuit breaker (CB1) on the front of the starter disconnects the main motor current only. Power is still energized for the other circuits. Two more circuit breakers inside the starter must be turned off to disconnect power to the oil pump, PIC controls, and oil heater.

Circuit breaker CB2 supplies power to the control center, oil heater, and portions of the starter controls. Circuit breaker CB3 supplies power to oil pump. Both of these circuit breakers are wired in parallel with CB1 so that power is supplied to them if the CB1 disconnect is open.

All starters must include a Carrier control module called the Starter Management Module (SMM). This module controls and monitors all aspects of the starter. See the Controls section on page 10 for additional SMM information. All starter replacement parts are supplied by the starter manufacturer.

Unit-Mounted Solid-State Starter (Optional) — The 19XR chiller may be equipped with a solid-state, reduced-voltage starter (Fig. 5 and 6). This starter provides on-off control of the compressor motor as its primary function. Using this type of starter reduces the peak starting torque, reduces the motor inrush current, and decreases mechanical shock. This is summed up by the phrase ‘‘soft starting.’’ The solid-state starter’s manufacturer name will be located inside the starter access door. See Fig. 6.

This type of starter operates by reducing the starting voltage. The starting torque of a motor at full voltage is typically 125% to 175% of the running torque. When the voltage and the current are reduced at start-up, the starting torque is reduced as well. The object is to reduce the starting voltage to just the voltage necessary to develop the torque required to get the motor moving. The voltage and current are then ramped up in a desired period of time. The voltage is reduced by using silicon controlled rectifiers (SCR). Once full voltage is reached, a bypass contactor is energized to bypass the SCRs.

⚠ WARNING

When voltage is supplied to the solid-state circuitry, the heat sinks within the starter are at line voltage. Do not touch the heat sinks while voltage is present or serious injury will result.

There is a display on the front of the Benshaw, Inc., solid-state starters that is useful for troubleshooting and starter check-out. The display indicates:

- voltage to the SCRs
- SCR control voltage
- power indication
- proper phasing for rotation
- start circuit energized
- over-temperature
- ground fault
- current unbalance
- run state

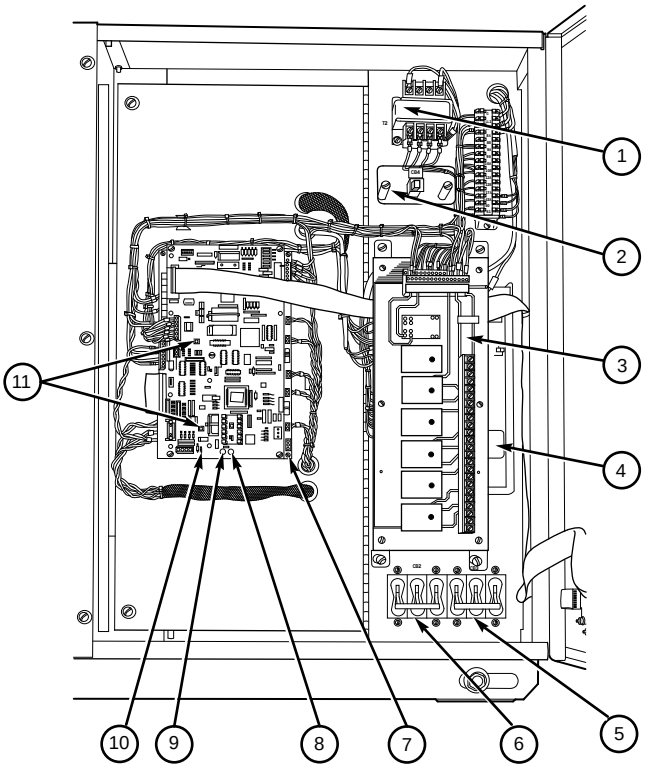

LEGEND

1 — Transformer
2 — Circuit Breaker 4 (CB4): Power to SMM
3 — Power Card
4 — SMM
5 — Circuit Breaker 3 (CB3): Oil Pump Power
6 — Circuit Breaker 2 (CB2): Control and PIC Heater Power
7 — Bypass Card (Bottom)
8 — Power "ON" (LED1)
9 — Microprocessor Fault (LED2)
10 — Computer Card (Top-Mounted Board)
11 — Reset Buttons

Fig. 5 — Solid-State Starter Box, Internal View

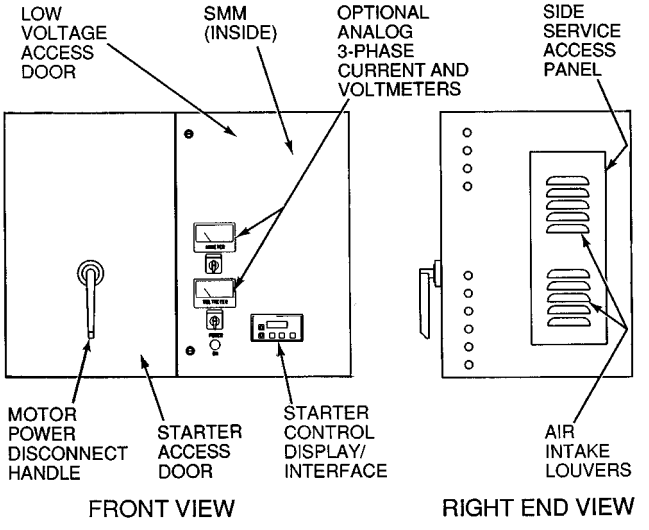

Fig. 6 — Typical Starter External View (Solid-State Starter Shown)

Unit-Mounted Wye-Delta Starter (Optional) — The 19XR chiller may be equipped with a wye-delta starter mounted on the unit. This starter is intended for use with low-voltage motors (under 600 v). It reduces the starting current inrush by connecting each phase of the motor windings into a wye configuration. This occurs during the starting period when the motor is accelerating up to speed. After a time delay and once the motor is up to speed, the starter automatically connects the phase windings into a delta configuration.

CONTROLS

Definitions

ANALOG SIGNAL — *An analog signal* varies in proportion to the monitored source. It quantifies values between operating limits. (Example: A temperature sensor is an analog device because its resistance changes in proportion to the temperature, generating many values.)

DIGITAL SIGNAL — *A digital (discrete) signal* is a 2-position representation of the value of a monitored source. (Example: A switch is a digital device because it only indicates whether a value is above or below a set point or boundary by generating an on/off, high/low, or open/closed signal.)

VOLATILE MEMORY — *Volatile memory* is memory incapable of being sustained if power is lost and subsequently restored.

⚠ CAUTION

The memory of the PSIO module is volatile. If the battery in a module is removed or damaged, all programming will be lost.

General — The 19XR hermetic centrifugal liquid chiller contains a microprocessor-based control center that monitors and controls all operations of the chiller. The microprocessor control system matches the cooling capacity of the chiller to the cooling load while providing state-of-the-art chiller protection. The system controls cooling load within the set point plus the deadband by sensing the leaving chilled water or brine temperature and regulating the inlet guide vane via a mechanically linked actuator motor. The guide vane is a variable flow prewhirl assembly that controls the refrigeration effect in the cooler by regulating the amount of refrigerant vapor flow into the compressor. An increase in guide vane opening increases capacity. A decrease in guide vane opening decreases capacity. Chiller protection is provided by the processor which monitors the digital and analog inputs (see Fig. 7) and executes capacity overrides or safety shutdowns, if required.

PIC System Components — The Product Integrated Control (PIC) is the control system on the chiller. See Table 1. The PIC controls the operation of the chiller by monitoring all operating conditions. The PIC can diagnose a problem and let the operator know what the problem is and what to check. It promptly positions the guide vanes to maintain leaving chilled water temperature. It can interface with auxiliary equipment such as pumps and cooling tower fans to turn them on only when required. It continually checks all safeties to prevent any unsafe operating condition. It also regulates the oil heater while the compressor is off and regulates the hot gas bypass valve, if installed.

The PIC can be interfaced with the Carrier Comfort Network (CCN) if desired. It can communicate with other PIC-equipped chillers and other CCN devices.

The PIC consists of 3 modules housed inside the 3 major components. The component names and the control voltage contained in each component are listed below (also see Table 1):

- control center
  — all extra low-voltage wiring (24 v or less)
- power panel
  — 230 or 115 v control voltage (per job requirement)
  — up to 600 v for oil pump power
- starter cabinet
  — chiller power wiring (per job requirement)

Table 1 — Major PIC Components and Panel Locations*

PIC COMPONENT	PANEL LOCATION
Processor Sensor Input/Output Module (PSIO)	Control Center
Starter Management Module (SMM)	Starter Cabinet
Local Interface Device (LID)	Control Center
6-Pack Relay Board	Control Center
8-Input Modules (Optional)	Control Center
Differential Oil Pressure/Power Supply Module	Control Center
Oil Heater Contactor (1C)	Power Panel
Oil Pump Contactor (2C)	Power Panel
Hot Gas Bypass Relay (3C) (Optional)	Power Panel
Control Transformers (T1, T2, T4)	Power Panel
Control and Oil Heater Voltage Selector (S1)	Power Panel
Temperature Sensors	See Fig. 7
Pressure Transducers	See Fig. 7

*See Fig. 5 and Fig. 7-11.

PROCESSOR MODULE (PSIO) — The PSIO is the brain of the PIC. This module contains all the operating software needed to control the chiller. The 19XR uses 4 pressure transducers and 8 thermistors to sense pressures and temperatures (Fig. 8 and 9). These are connected to the PSIO module. The PSIO also provides outputs to the guide vane actuator, oil pump, oil heater, hot gas bypass (optional), and alarm contact. The PSIO communicates with the LID, the SMM, and the optional 8-input modules for user interface and starter management.

STARTER MANAGEMENT MODULE (SMM) — This module is located within the starter cabinet. This module initiates PSIO commands for starter functions such as start/stop of the compressor, start/stop of the condenser and chilled water pumps, start/stop of the tower fan, spare alarm contacts, and the shunt trip. The SMM monitors starter inputs such as flow switches, line voltage, remote start contact, spare safety, condenser high pressure, oil pump interlock, motor current signal, starter 1M and run contacts, and kW transducer input (optional). The SMM contains logic capable of safely shutting down the chiller if communications with the PSIO are lost.

LOCAL INTERFACE DEVICE (LID) — The LID is mounted to the control center (Fig. 10) and allows the operator to interface with the PSIO or other CCN devices. It is the input center for all local chiller set points, schedules, set-up functions, and options. The LID has a STOP button, an alarm light, 4 buttons for logic inputs, and a display. The function of the 4 buttons or ‘‘softkeys’’ are menu driven and are shown on the display directly above the key.

6-PACK RELAY BOARD — This device is a cluster of 6 pilot relays located in the control center. It is energized by the PSIO for the oil pump, oil heater, alarm, optional hot gas bypass relay, and motor cooling solenoid.

8-INPUT MODULES — One optional module is factory installed in the control center panel when ordered. There can be up to 2 of these modules per chiller with 8 spare inputs each. They are used whenever chilled water reset, demand reset, or reading a spare sensor is required. The sensors or 4 to 20 mA signals are field-installed.

The spare temperature sensors must have the same temperature/resistance curve as the other temperature sensors on this unit. These sensors are 5,000 ohm at 75 F (25 C).

OIL HEATER CONTACTOR (1C) — This contactor is located in the power panel (Fig. 11) and operates the heater at either 115 or 230 v. It is controlled by the PIC to maintain oil temperature during chiller shutdown.

OIL PUMP CONTACTOR (2C) — This contactor is located in the power panel. It operates all 200 to 575-v oil pumps. The PIC energizes the contactor to turn on the oil pump as necessary.

HOT GAS BYPASS CONTACTOR RELAY (3C) (Optional) — This relay, located in the power panel, controls the opening of the hot gas bypass valve. The PIC energizes the relay during low load, high lift conditions.

CONTROL TRANSFORMERS (T1, T2, T4) — These transformers convert incoming control voltage to either 21 vac power for the PSIO module and options modules, or 24 vac power for 3 power panel contactor relays. They are located in the power panel.

OIL DIFFERENTIAL PRESSURE/POWER SUPPLY MODULE — This module, which is located in the control center, provides 5 vdc power for the transducers and LID backlight. On open-drive chillers, this module outputs the difference between two pressure transducer input signals. The module subtracts oil supply pressure from transmission sump pressure and outputs the difference as an oil differential pressure signal to the PSIO. The PSIO converts this signal to differential oil pressure. To calibrate this reading, refer to the Troubleshooting, Checking Transistors section.

CONTROL AND OIL HEATER VOLTAGE SELECTOR (S1) — It is possible to use either 115 v or 230 v incoming control power in the power panel. The switch is set to the voltage used at the jobsite.

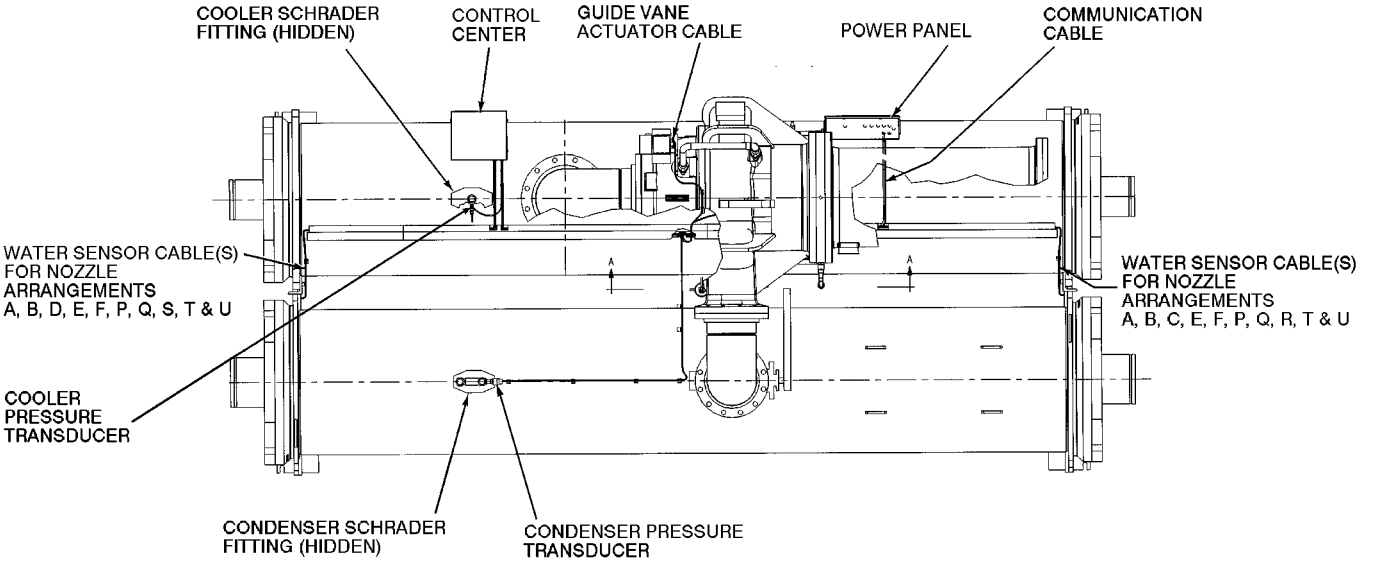

TOP VIEW

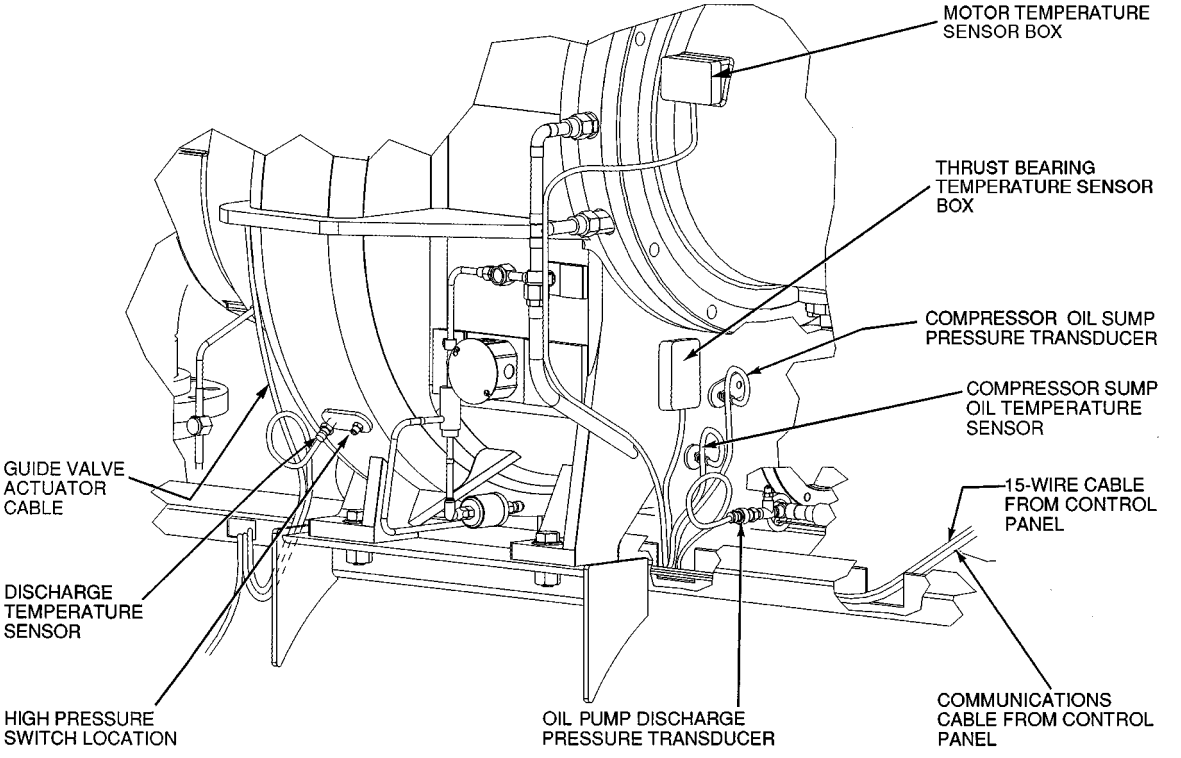

VIEW A − A (COMPRESSOR DETAIL)

Fig. 7 — 19XR Controls and Sensor Locations

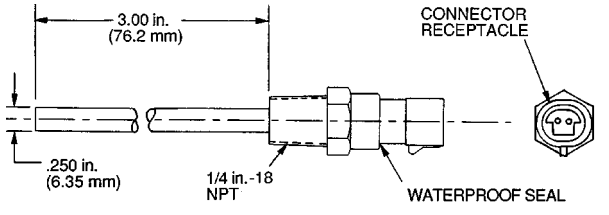

Fig. 8 — Control Sensors (Temperature)

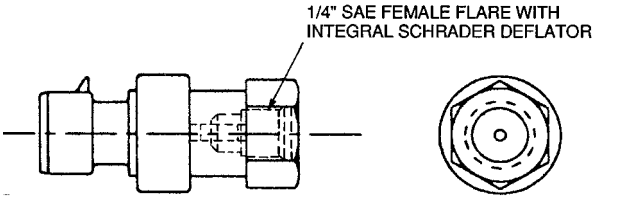

Fig. 9 — Control Sensors (Pressure Transducer, Typical)

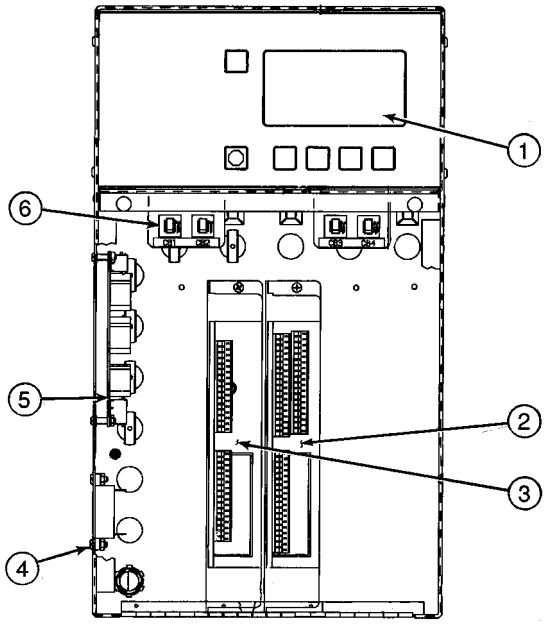

LEGEND

1 — LID
2 — PSIO
3 — 8-Input Module (One of 2 Available)
4 — 5-Volt Transducer Power Supply
5 — 6-Pack Relay Board
6 — Circuit Breakers (4)

Fig. 10 — Control Panel (Front View), with Options Module

LID Operation and Menus (Fig. 12-18)

GENERAL

- The LID display will automatically revert to the default screen after 15 minutes if no softkey activity takes place and if the chiller is not in the Pumpdown mode (Fig. 12).
- When not in the default screen, the upper right-hand corner of the LID always displays the name of the screen that you have entered (Fig. 13).
- The LID may be configured in English or SI units, through the LID configuration screen.
- Local Operation — By pressing the LOCAL softkey, the PIC is now in the LOCAL operation mode and the control will accept modification to programming from the LID only. The PIC will use the Local Time Schedule to determine chiller start and stop times.
- CCN Operation — By pressing the CCN softkey, the PIC is now in the CCN operation mode, and the control will accept modifications from any CCN interface or module (with the proper authority), as well as the LID. The PIC will use the CCN time schedule to determine start and stop times.

ALARMS AND ALERTS — Alarm (*) and alert (!) status are indicated on the Status tables on the far right field of the LID display screen. An alarm (*) will shut down the compressor. An alert (!) notifies the operator that an unusual condition has occurred. The chiller will continue to operate when an alert is shown.

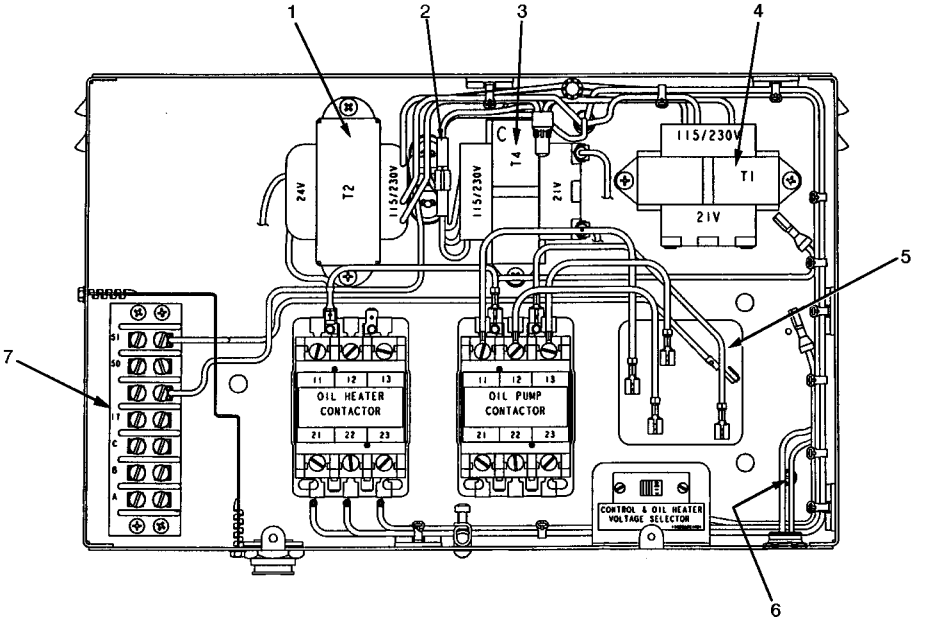

LEGEND

1 — T2 — 24 vac Power Transformer for Hot Gas Bypass Relay, Oil Pump Relay, Oil Heater Relay, Motor Cooling Solenoid, Oil Reclaim Solenoid
2 — Oil Pressure Switch
3 — T4 — 24 vac, Optional 8-Input Module Transformer
4 — T1 — 24 vac, Control Center Transformer
5 — 3C Hot Gas Bypass Relay Location
6 — Oil Pump Terminal Block
7 — Factory Terminal Connections

Fig. 11 — Power Panel with Options

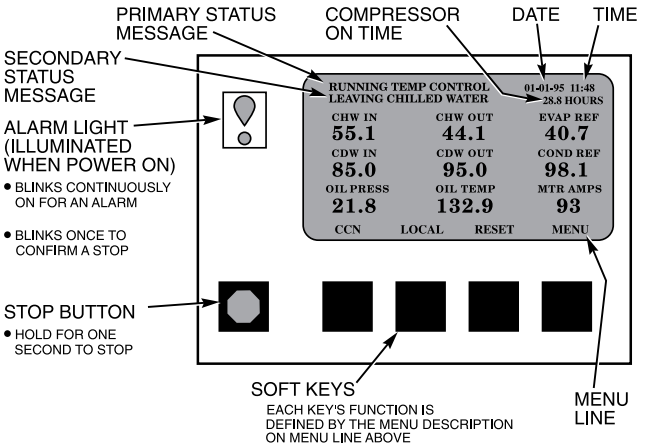

Fig. 12 — LID Default Screen

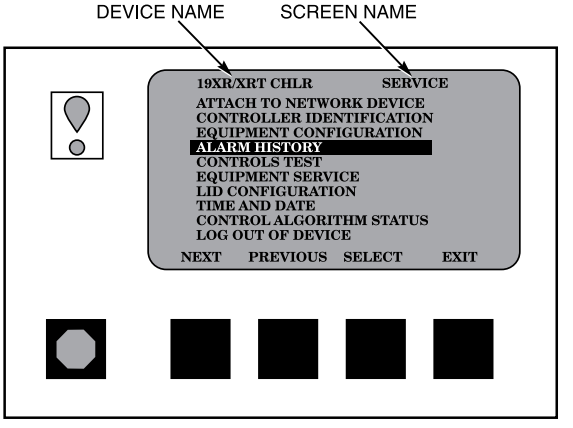

Fig. 13 — LID Service Screen

Alarms are indicated when the control center alarm light (!) flashes. The primary alarm message is displayed on the default screen and an additional, secondary, message and troubleshooting information are sent to the Alarm History table.

When an alarm is detected, the LID default screen will freeze (stop updating) at the time of alarm. The freeze enables the operator to view the chiller conditions at the time of alarm. The Status tables will show the updated information. Once all alarms have been cleared (by pressing the RESET softkey), the default LID screen will return to normal operation.

LID DEFAULT SCREEN MENU ITEMS — To perform any of the operations described below, the PIC must be powered up and have successfully completed its self test. The self test takes place automatically, after power-up.

The Default screen menu selection offers 4 options (Status, Schedule, Setpoint, and Service). The Status menu allows for viewing and limited calibration/modification of control points and sensors, relays and contacts, and the options board. The Schedule menu allows for the viewing and modification of the Local Control, CCN Control, and Ice Build time schedules. Under the Setpoint menu, numerous set points including Base Demand Limit, LCW, ECW, and Ice Build can be adjusted. The Service menu can be used to revise alarm history, control test, control algorithm status, equipment configurations, equipment service, time and date, attach to network, log out of device, controller identification, and LID configurations. Figures 15 and 16 provide additional information on the menu structure.

Press the MENU softkey to select from the 4 options. To view or change parameters within any menu structure, use the SELECT softkey to choose the desired table or item. The soft key modification choices displayed will depend on whether the selected item is a discrete point, analog point, or an override point. At this point, press the softkey that corresponds to your configuration selection or press the QUIT softkey. If the QUIT softkey is depressed, the configuration will not be modified. Refer to the following Menu Structure section.

MENU STRUCTURE — To perform any of the operations described below, the PIC must be powered up and have successfully completed its self test. The self-test takes place automatically, after power-up.

- Press QUIT to leave the selected decision or field without saving any changes.

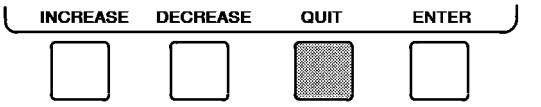

- Press ENTER to leave the selected decision or field and save changes.

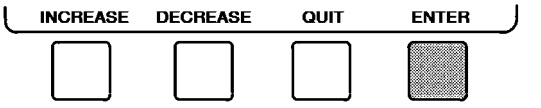

- Press NEXT to scroll the cursor bar down in order to highlight a point or to view more points below the current screen.

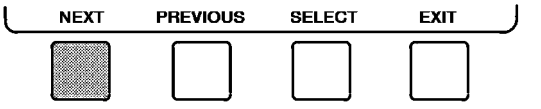

- Press PREVIOUS to scroll the cursor bar up in order to highlight a point or to view points above the current screen.

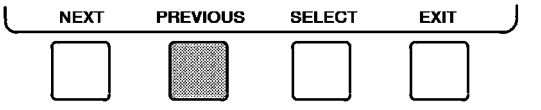

- Press SELECT to view the next screen level (highlighted with the cursor bar), or to override (if allowable) the highlighted point value.

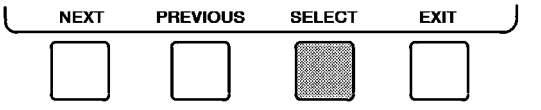

- Press EXIT to return to the previous screen level.

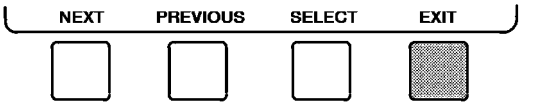

- Press INCREASE or DECREASE to change the highlighted point value.

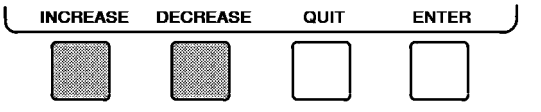

TO VIEW POINT STATUS (Fig. 14) — Point Status is the actual value of all of the temperatures, pressures, relays, and actuators sensed and controlled by the PIC.

1. On the Menu screen, press STATUS to view the list of Point Status tables.

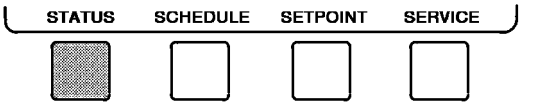

2. Press NEXT or PREVIOUS to highlight the desired status table. The list of tables is:
   - Status01 — Status of control points and sensors
   - Status02 — Status of relays and contacts
   - Status03 — Status of both optional 8-input modules and sensors

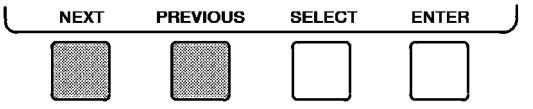

3. Press SELECT to view the desired Point Status table desired.

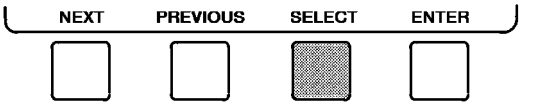

4. On the Point Status table press NEXT or PREVIOUS until desired point is displayed on the screen.

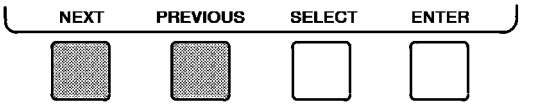

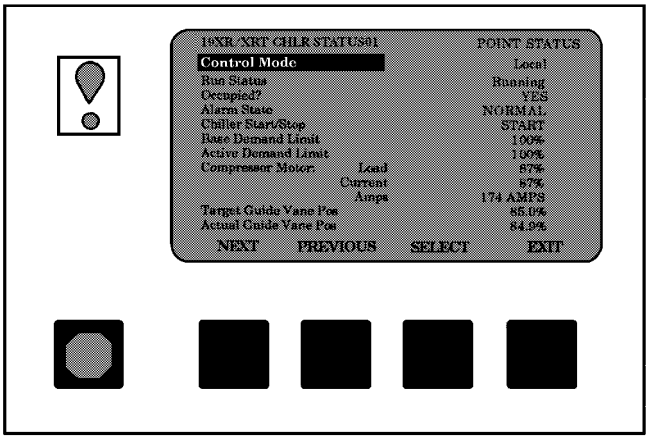

Fig. 14 — Example of Point Status Screen (Status01)

OVERRIDE OPERATIONS

To Override a Value or Status

1. On the Point Status table press NEXT or PREVIOUS to highlight the desired point.

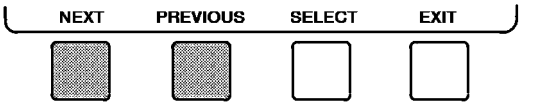

2. Press SELECT to select the highlighted point. Then:

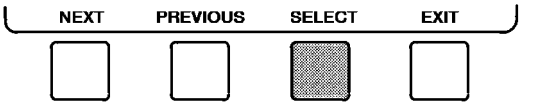

For Discrete Points — Press START or STOP to select the desired state.

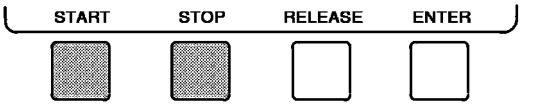

For Analog Points — Press INCREASE or DECREASE to select the desired value.

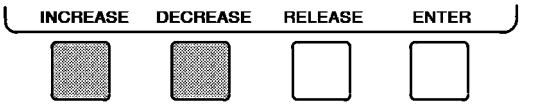

3. Press ENTER to register new value.

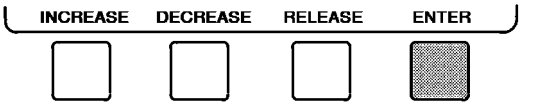

NOTE: When overriding or changing metric values, it is necessary to hold down the softkey for a few seconds in order to see a value change, especially on kilopascal values.

To Remove an Override

1. On the Point Status table press NEXT or PREVIOUS to highlight the desired point.

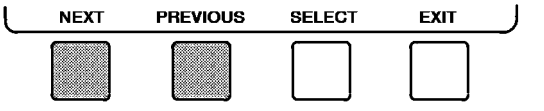

2. Press SELECT to access the highlighted point.

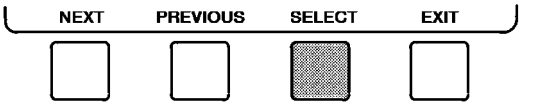

3. Press RELEASE to remove the override and return the point to the PIC's automatic control.

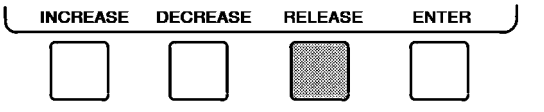

Override Indication — An override value is indicated by "SUPVSR," "SERVC," or "BEST" flashing next to the point value on the Status table.

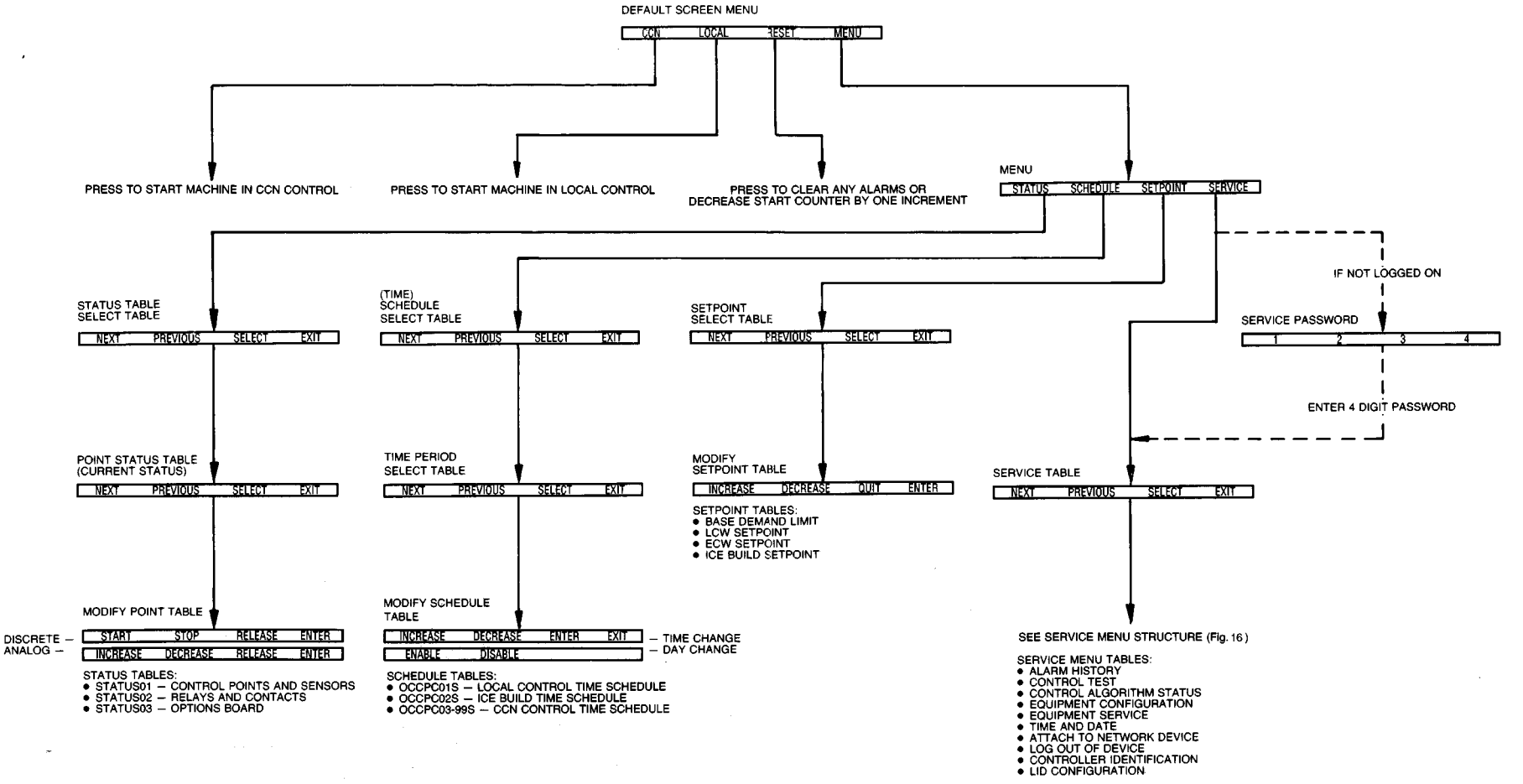

Fig. 15 — 19XR Menu Structure

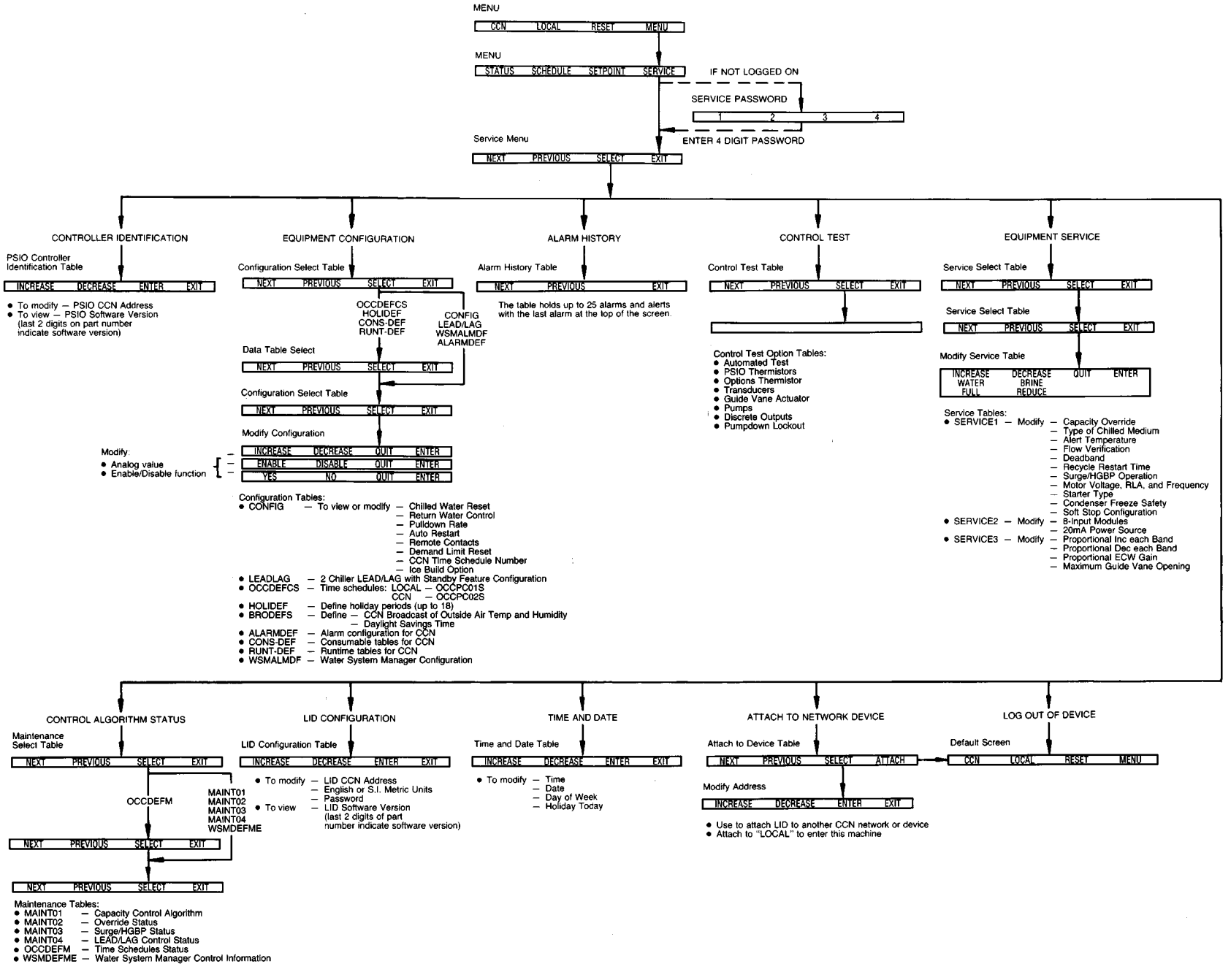

Fig. 16 — 19XR Service Menu Structure

TIME SCHEDULE OPERATION (Fig. 17)

1. On the Menu screen, press SCHEDULE .

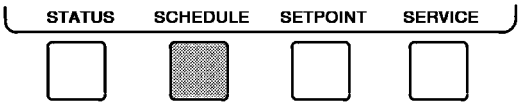

2. Press NEXT or PREVIOUS to highlight the desired schedule.

   OCCPC01S — LOCAL Time Schedule
   OCCPC02S — ICE BUILD Time Schedule
   OCCPC03-99S — CCN Time Schedule (Actual number is defined in Config table.)

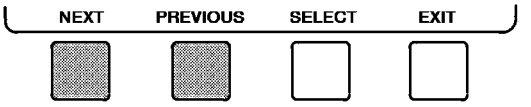

3. Press SELECT to access and view the time schedule.

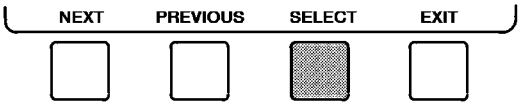

4. Press NEXT or PREVIOUS to highlight the desired period or override that you wish to change.

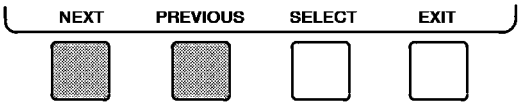

5. Press SELECT to access the highlighted period or override.

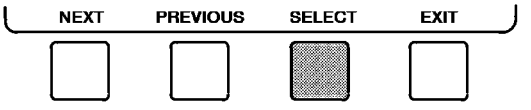

6. a. Press INCREASE or DECREASE to change the time values. Override values are in one-hour increments, up to 4 hours.

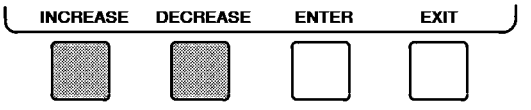

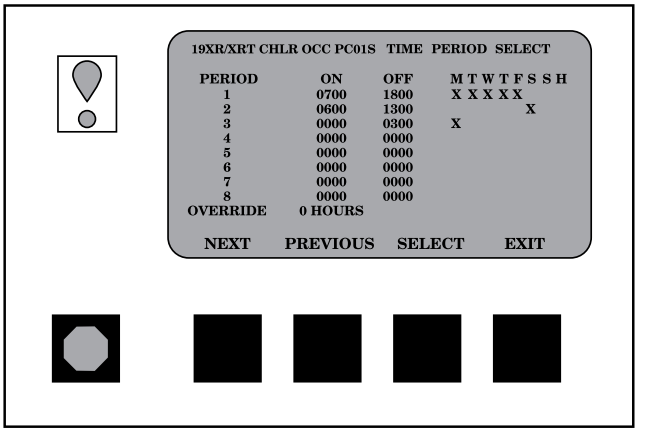

Fig. 17 — Example of Time Schedule Operation Screen

b. Press ENABLE to select days in the day-of-week fields. Press DISABLE to eliminate days from the period.

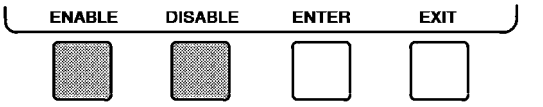

7. Press ENTER to register the values and to move horizontally (left to right) within a period.

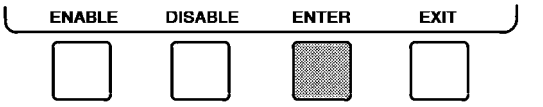

8. Press EXIT to leave the period or override.

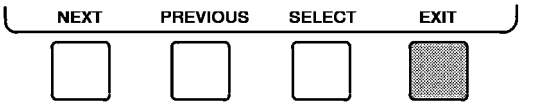

9. Either return to Step 4 to select another period or override, or press EXIT again to leave the current time schedule screen and save the changes.

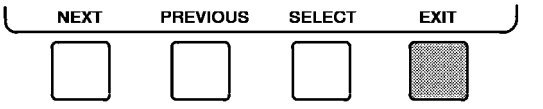

10. Holiday Designation (HOLIDEF table) may be found in the Service Operation section, page 35. You must assign the month, day, and duration for the holiday. The Broadcast function in the Brodefs table also must be enabled for holiday periods to function.

TO VIEW AND CHANGE SET POINTS (Fig. 18)

1. To view the Set Point table, at the Menu screen press SETPOINT .

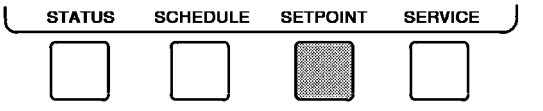

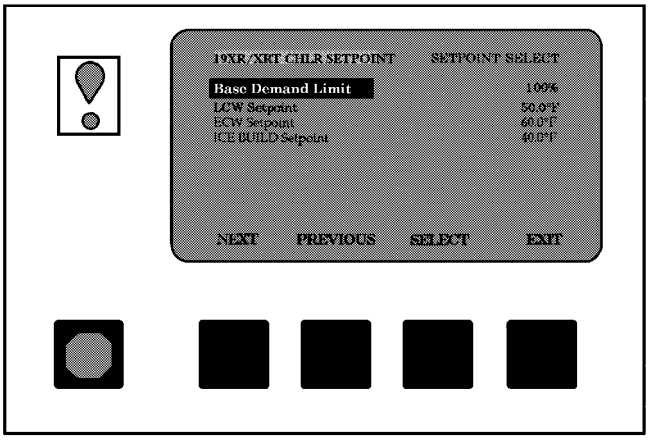

Fig. 18 — Example of Set Point Screen

2. There are 4 set points on this screen: Base Demand Limit; LCW Set Point (leaving chilled water set point); ECW Set Point (entering chilled water set point); and ICE BUILD set point. Only one of the chilled water set points can be active at one time, and the type of set point is activated in the Service menu. ICE BUILD is also activated and configured in the Service menu.

3. Press NEXT or PREVIOUS to highlight the desired set point entry.

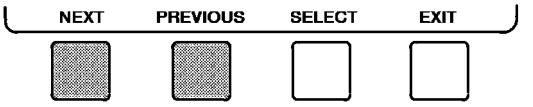

4. Press SELECT to modify the highlighted set point.

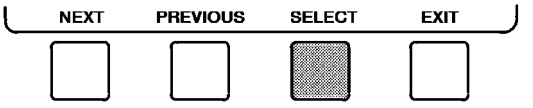

5. Press INCREASE or DECREASE to change the selected set point value.

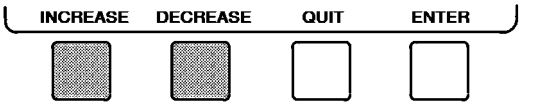

6. Press ENTER to save the changes and return to the previous screen.

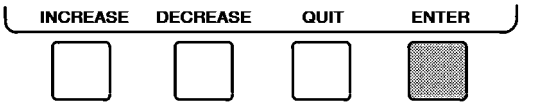

SERVICE OPERATION — To view the menu-driven programs available for Service Operation, see Service Operation section, page 35. For examples of LID display screens, see Table 2.

Table 2 — LID Screens

NOTES:
1. Only 12 lines of information appear on the LID screen at any given time. Press **NEXT** or **PREVIOUS** to highlight a point or to view points below or above the current screen.
2. The LID may be configured in English or SI units, as required, using the LID configuration screen.
3. The items listed in the Reference Point Names column *do not appear on the LID display screen.* They are data or variable names used for CCN operations only. They are listed here as a convenience to the operator if it is necessary to cross reference CCN documentation or use CCN programs.

EXAMPLE 1 — STATUS01 DISPLAY SCREEN

To access this display from the **LID default** screen:

1. Press **MENU** .
2. Press **STATUS** (**STATUS01** will be highlighted).
3. Press **SELECT** .

DESCRIPTION	RANGE	UNITS	REFERENCE POINT NAME (ALARM HISTORY)
Control Mode	Reset, Off, Local, CCN		MODE
Run Status	Timeout, Recycle, Startup, Ramping, Running, Demand, Override, Shutdown, Abnormal, Pumpdown		STATUS
Occupied ?	No/Yes		OCC
Alarm State	Normal/Alarm		ALM
***Chiller Start/Stop**	Stop/Start		CHIL_S_S
Base Demand Limit	40-100	%	DLM
***Active Demand Limit**	40-100	%	DEM_LIM
Compressor Motor Load	0-9999	%	CA_L
Current	0-9999	%	CA_P
****Amps**	0-9999	AMPS	CA_A
***Target Guide Vane Pos**	0-100	%	GV_TRG
Actual Guide Vane Pos	0-100	%	GV_ACT
Water/Brine: Setpoint	10-120 (–12.2-48.9)	DEG F (DEG C)	SP
***Control Point**	10-120 (–12.2-48.9)	DEG F (DEG C)	LCW_STPT
Entering Chilled Water	–40-245 (–40-118)	DEG F (DEG C)	ECW
Leaving Chilled Water	–40-245 (–40-118)	DEG F (DEG C)	LCW
Entering Condenser Water	–40-245 (–40-118)	DEG F (DEG C)	ECDW
Leaving Condenser Water	–40-245 (–40-118)	DEG F (DEG C)	LCDW
Evaporator Refrig Temp	–40-245 (–40-118)	DEG F (DEG C)	ERT
****Evaporator Pressure**	–6.7-420 (–46-2896)	PSI (kPa)	ERP
Condenser Refrig Temp	–40-245 (–40-118)	DEG F (DEG C)	CRT
****Condenser Pressure**	–6.7-420 (–46-2896)	PSI (kPa)	CRP
Discharge Temperature	–40-245 (–40-118)	DEG F (DEG C)	CMPD
Bearing Temperature	–40-245 (–40-118)	DEG F (DEG C)	MTRB
Motor Winding Temp	–40-245 (–40-118)	DEG F (DEG C)	MTRW
Oil Sump Temperature	–40-245 (–40-118)	DEG F (DEG C)	OILT
****Oil Pressure**	–6.7-420 (–46-2896)	PSID (kPad)	OILPD
Line Voltage: ****Percent	0-999	%	V_P
Actual	0-99999	VOLTS	V_A
***Remote Contacts Input**	Off/On		REMCON
Total Compressor Starts	0-65535		c_starts
Starts in 12 Hours	0-8		STARTS
Compressor Ontime	0-500000.0	HOURS	c_hrs
***Service Ontime**	0-32767	HOURS	S_HRS
***Compressor Motor kW**	0-9999	kW	CKW

NOTE: All values are variables available for read operation to a CCN. Descriptions shown with (*) support write operations for BEST programming language, data-transfer, and overriding.

Descriptions shown with (**) may be calibrated from the LID.

Table 2 — LID Screens (cont)

EXAMPLE 2 — STATUS02 DISPLAY SCREEN

To access this display from the **LID default** screen:

1. Press **MENU** .
2. Press **STATUS** .
3. Scroll down to highlight **STATUS02**.
4. Press **SELECT** .

DESCRIPTION	POINT TYPE		UNITS	REFERENCE POINT NAME (ALARM HISTORY)
	INPUT	OUTPUT		
Hot Gas Bypass Relay		X	OFF/ON	HGBR
***Chilled Water Pump**		X	OFF/ON	CHWP
Chilled Water Flow	X		NO/YES	EVFL
***Condenser Water Pump**		X	OFF/ON	CDP
Condenser Water Flow	X		NO/YES	CDFL
Compressor Start Relay		X	OFF/ON	CMPR
Compressor Start Contact	X		OPEN/CLOSED	1CR__AUX
Compressor Run Contact	X		OPEN/CLOSED	RUN__AUX
Starter Fault Contact	X		OPEN/CLOSED	STR__FLT
Pressure Trip Contact	X		OPEN/CLOSED	PRS__TRIP
Single Cycle Dropout	X		NORMAL/ALARM	V1__CYCLE
Oil Pump Relay		X	OFF/ON	OILR
Oil Heater Relay		X	OFF/ON	OILH
***Tower Fan Relay**		X	OFF/ON	TFR
Compr. Shunt Trip Relay		X	OFF/ON	TRIPR
Alarm Relay		X	NORMAL/ALARM	ALM
Spare Prot Limit Input	X		ALARM/NORMAL	SPR__PL

NOTE: All values are variables available for read operation to a CCN. Descriptions shown with (*) support write operations from the LID only.

EXAMPLE 3 — STATUS03 DISPLAY SCREEN

To access this display from the **LID default** screen:

1. Press **MENU** .
2. Press **STATUS**.
3. Scroll down to highlight **STATUS03**.
4. Press **SELECT** .

DESCRIPTION	RANGE	UNITS	REFERENCE POINT NAME (ALARM HISTORY)
OPTIONS BOARD 1			
***Demand Limit 4-20 mA**	4-20	mA	DEM__OPT
***Temp Reset 4-20 mA**	4-20	mA	RES__OPT
***Common CHWS Sensor**	–40-245 (–40-118)	DEG F (DEG C)	CHWS
***Common CHWR Sensor**	–40-245 (–40-118)	DEG F (DEG C)	CHWR
***Remote Reset Sensor**	–40-245 (–40-118)	DEG F (DEG C)	R__RESET
***Temp Sensor — Spare 1**	–40-245 (–40-118)	DEG F (DEG C)	SPARE1
***Temp Sensor — Spare 2**	–40-245 (–40-118)	DEG F (DEG C)	SPARE2
***Temp Sensor — Spare 3**	–40-245 (–40-118)	DEG F (DEG C)	SPARE3
OPTIONS BOARD 2			
***4-20 mA — Spare 1**	4-20	mA	SPARE1__M
***4-20 mA — Spare 2**	4-20	mA	SPARE2__M
***Temp Sensor — Spare 4**	–40-245 (–40-118)	DEG F (DEG C)	SPARE4
***Temp Sensor — Spare 5**	–40-245 (–40-118)	DEG F (DEG C)	SPARE5
***Temp Sensor — Spare 6**	–40-245 (–40-118)	DEG F (DEG C)	SPARE6
***Temp Sensor — Spare 7**	–40-245 (–40-118)	DEG F (DEG C)	SPARE7
***Temp Sensor — Spare 8**	–40-245 (–40-118)	DEG F (DEG C)	SPARE8
***Temp Sensor — Spare 9**	–40-245 (–40-118)	DEG F (DEG C)	SPARE9

NOTE: All values shall be variables available for read operation to a CCN network. Descriptions shown with (*) support write operations for BEST programming language, data-transfer, and overriding.

EXAMPLE 4 — SETPOINT DISPLAY SCREEN

To access this display from the **LID default** screen:

1. Press **MENU** .
2. Press **SETPOINT** .

DESCRIPTION	CONFIGURABLE RANGE	UNITS	REFERENCE POINT NAME	DEFAULT VALUE
Base Demand Limit	40-100	%	DLM	100
LCW Setpoint	10-120 (–12.2-48.9)	DEG F (DEG C)	lcw__sp	50.0 (10.0)
ECW Setpoint	15-120 (–9.4-48.9)	DEG F (DEG C)	ecw__sp	60.0 (15.6)
ICE BUILD Setpoint	15- 60 (–9.4-15.6)	DEG F (DEG C)	ice__sp	40.0 (4.4)

Table 2 — LID Screens (cont)

EXAMPLE 5 — CONFIGURATION (CONFIG) DISPLAY SCREEN

To access this display from the **LID default** screen:

1. Press **MENU** .
2. Press **SERVICE** .
3. Scroll down to highlight **EQUIPMENT CONFIGURATION**.
4. Press **SELECT** .
5. Scroll down to highlight **CONFIG**.
6. Press **SELECT** .

DESCRIPTION	CONFIGURABLE RANGE	UNITS	REFERENCE POINT NAME	DEFAULT VALUE
RESET TYPE 1				
Degrees Reset at 20 mA	–30-30 (–17-17)	DEG F (DEG C)	deg_20ma	10Δ(6Δ)
RESET TYPE 2				
Remote Temp (No Reset)	–40-245 (–40-118)	DEG F (DEG C)	res_rt1	85 (29)
Remote Temp (Full Reset)	–40-245 (–40-118)	DEG F (DEG C)	res_rt2	65 (18)
Degrees Reset	–30-30 (–17-17)	DEG F (DEG C)	res_rt	10Δ(6Δ)
RESET TYPE 3				
CHW Delta T (No Reset)	0-15 (0-8)	DEG F (DEG C)	restd_1	10Δ(6Δ)
CHW Delta T (Full Reset)	0-15 (0-8)	DEG F (DEG C)	restd_2	0Δ(0Δ)
Degrees Reset	–30-30 (–17-17)	DEG F (DEG C)	deg_chw	5Δ(3Δ)
Select/Enable Reset Type	0-3		res_sel	0
ECW CONTROL OPTION	DISABLE/ENABLE		ecw_opt	DISABLE
Demand Limit at 20 mA	40-100	%	dem_20ma	40
20mA Demand Limit Option	DISABLE/ENABLE		dem_sel	DISABLE
Auto Restart Option	DISABLE/ENABLE		astart	DISABLE
Remote Contacts Option	DISABLE/ENABLE		r_contact	DISABLE
Temp Pulldown Deg/Min	2-10		tmp_ramp	3
Load Pulldown %/Min	5-20		kw_ramp	10
Select Ramp Type: Temp = 0, Load = 1	0/1		ramp_opt	1
Loadshed Group Number	0-99		ldsgrp	0
Loadshed Demand Delta	0-60	%	ldsdelta	20
Maximum Loadshed Time	0-120	MIN	maxldstm	60
CCN Occupancy Config:				
Schedule Number	3-99		occpcxxe	3
Broadcast Option	DISABLE/ENABLE		occbrcst	DISABLE
ICE BUILD Option	DISABLE/ENABLE		ibopt	DISABLE
ICE BUILD TERMINATION 0 =Temp, 1 =Contacts, 2 =Both	0-2		ibterm	0
ICE BUILD Recycle Option	DISABLE/ENABLE		ibrecyc	DISABLE

NOTE: Δ = delta degrees.

EXAMPLE 6 — LEAD/LAG CONFIGURATION DISPLAY SCREEN

To access this display from the **LID default** screen:

1. Press **MENU** .
2. Press **SERVICE** .
3. Scroll down to highlight **EQUIPMENT CONFIGURATION**.
4. Press **SELECT** .
5. Scroll down to highlight **Lead/Lag**.
6. Press **SELECT** .

LEAD/LAG CONFIGURATION SCREEN

DESCRIPTION	CONFIGURABLE RANGE	UNITS	REFERENCE POINT NAME	DEFAULT VALUE
LEAD/LAG SELECT DISABLE =0, LEAD =1, LAG =2, STANDBY =3	0-3		leadlag	0
Load Balance Option	DISABLE/ENABLE		loadbal	DISABLE
Common Sensor Option	DISABLE/ENABLE		commsens	DISABLE
LAG Percent Capacity	25-75	%	lag_per	50
LAG Address	1-236		lag_add	92
LAG START Timer	2-60	MIN	lagstart	10
LAG STOP Timer	2-60	MIN	lagstop	10
PRESTART FAULT Timer	2-30	MIN	preflt	5
STANDBY Chiller Option	DISABLE/ENABLE		stndopt	DISABLE
STANDBY Percent Capacity	25-75	%	stnd_per	50
STANDBY Address	1-236		stnd_add	93

Table 2 — LID Screens (cont)

EXAMPLE 7 — SERVICE1 DISPLAY SCREEN

To access this display from the **LID default** screen:

1. Press **MENU** .
2. Press **SERVICE** .
3. Scroll down to highlight **EQUIPMENT SERVICE**.
4. Press **SELECT** .
5. Scroll down to highlight **SERVICE1**.
6. Press **SELECT** .

DESCRIPTION	CONFIGURABLE RANGE	UNITS	REFERENCE POINT NAME	DEFAULT VALUE
Motor Temp Override	150-200 (66-93)	DEG F (DEG C)	mt_over	200 (93)
Cond Press Override	90-180 (620-1241)	PSI (kPa)	cp_ over	125 (862)
Refrig Override Delta T	2-5 (1-3)	DEG F (DEG C)	ref_over	3Δ (1.6Δ)
Chilled Medium	Water/Brine		medium	WATER
Brine Refrig Trippoint	0-40 (–17.7-4)	DEG F (DEG C)	br_trip	33 (1)
Compr Discharge Alert	125-200 (52-93)	DEG F (DEG C)	cd_alert	200 (93)
Bearing Temp Alert	165-185 (74-85)	DEG F (DEG C)	tb_alert	175 (79)
Water Flow Verify Time	0.5-5	MIN	wflow_t	5
Oil Press Verify Time	15-300	SEC	oilpr_t	15
Water/Brine Deadband	0.5-2.0 (0.3-1.1)	DEG F (DEG C)	cw_db	1.0 (0.6)
Recycle Restart Delta T	2.0-10.0 (1.1-5.6)	DEG F (DEG C)	rcyc_dt	5 (2.8)
Recycle Shutdown Delta T	0.5-4.0 (0.27-2.2)	ΔDEG F (Δ DEG C)	rcycsdt	1.0 (0.6)
Surge Limit/HGBP Option	0/1		srg_hgbp	0
Select: Surge=0, HGBP=1				
Surge/HGBP Delta T1	0.5-15 (0.3-8.3)	DEG F (DEG C)	hgb_dt1	1.5 (0.8)
Surge/HGBP Delta P1	30-170 (207-1172)	PSI (kPa)	hgb_dp1	50 (345)
Min. Load Points (T1/P1)				
Surge/HGBP Delta T2	0.5-15 (0.3-8.3)	DEG F (DEG C)	hgb_dt2	10 (5.6)
Surge/HGBP Delta P2	30-170 (207-1172)	PSI (kPa)	hgb_dp2	85 (586)
Full Load Points (T2/P2)				
Surge/HGBP Deadband	1-3 (0.6-1.6)	DEG F (DEG C)	hgb_dp	1 (0.6)
Surge Delta Percent Amps	10-50	%	surge_a	25
Surge Time Period	1-5	MIN	surge_t	2
Demand Limit Source	0/1		dem_src	0
Select: Amps=0, Load=1				
Amps Correction Factor	1-8		corfact	3
Motor Rated Load Amps	1-9999	AMPS	a_fs	200
Motor Rated Line Voltage	1-99999	VOLTS	v_fs	460
Meter Rated Line KW	1-9999	kW	kw_fs	600
Line Frequency	0/1	HZ	freq	0
Select: 0=60 Hz, 1=50 Hz				
Compr Starter Type	REDUCE/FULL		starter	REDUCE
Condenser Freeze Point	–20-35 (–28.9-1.7)	DEG F (DEG C)	cdfreeze	34 (1)
Soft Stop Amps Threshold	40-100	%	softstop	100

NOTE: Δ = delta degrees.

Table 2 — LID Screens (cont)

EXAMPLE 8 — SERVICE2 DISPLAY SCREEN

To access this display from the **LID default** screen:

1. Press **MENU** .
2. Press **SERVICE** .
3. Scroll down to highlight **EQUIPMENT SERVICE**.
4. Press **SELECT** .
5. Scroll down to highlight **SERVICE2**.
6. Press **SELECT** .

DESCRIPTION	CONFIGURABLE RANGE	UNITS	REFERENCE POINT NAME	DEFAULT VALUE
OPTIONS BOARD 1				
20 mA POWER CONFIGURATION External = 0, Internal = 1				
RESET 20 mA Power Source	0, 1		res_20 ma	0
DEMAND 20 mA Power Source	0, 1		dem_20 ma	0
SPARE ALERT ENABLE Disable = 0, Low = 1, High = 2 Temp = Alert Threshold				
CHWS Temp Enable	0-2		chws_en	0
CHWS Temp Alert	–40-245 (–40-118)	DEG F (DEG C)	chws_al	245 (118)
CHWR Temp Enable	0-2		chwr_en	0
CHWR Temp Alert	–40-245 (–40-118)	DEG F (DEG C)	chwr_al	245 (118)
Reset Temp Enable	0-2		rres_en	0
Reset Temp Alert	–40-245 (–40-118)	DEG F (DEG C)	rres_al	245 (118)
Spare Temp 1 Enable	0-2		spr1_en	0
Spare Temp 1 Alert	–40-245 (–40-118)	DEG F (DEG C)	spr1_al	245 (118)
Spare Temp 2 Enable	0-2		spr2_en	0
Spare Temp 2 Alert	–40-245 (–40-118)	DEG F (DEG C)	spr2_al	245 (118)
Spare Temp 3 Enable	0-2		spr3_en	0
Spare Temp 3 Alert	–40-245 (–40-118)	DEG F (DEG C)	spr3_al	245 (118)
OPTIONS BOARD 2				
20 mA POWER CONFIGURATION External = 0, Internal = 1				
SPARE 1 20 mA Power Source	0, 1		sp1_20 ma	0
SPARE 2 20 mA Power Source	0, 1		sp2_20 ma	0
SPARE ALERT ENABLE Disable = 0, Low = 1, High = 2 Temp = Alert Threshold				
Spare Temp 4 Enable	0-2		spr4_en	0
Spare Temp 4 Alert	–40-245 (–40-118)	DEG F (DEG C)	spr4_al	245 (118)
Spare Temp 5 Enable	0-2		spr5_en	0
Spare Temp 5 Alert	–40-245 (–40-118)	DEG F (DEG C)	spr5_al	245 (118)
Spare Temp 6 Enable	0-2		spr6_en	0
Spare Temp 6 Alert	–40-245 (–40-118)	DEG F (DEG C)	spr6_al	245 (118)
Spare Temp 7 Enable	0-2		spr7_en	0
Spare Temp 7 Alert	–40-245 (–40-118)	DEG F (DEG C)	spr7_al	245 (118)
Spare Temp 8 Enable	0-2		spr8_en	0
Spare Temp 8 Alert	–40-245 (–0-118)	DEG F (DEG C)	spr8_al	245 (118)
Spare Temp 9 Enable	0-2		spr9_en	0
Spare Temp 9 Alert	–40-245 (–40-118)	DEG F (DEG C)	spr9_al	245 (118)

NOTE: This screen provides the means to generate alert messages based on exceeding the ‘‘Temp Alert’’ threshold for each point listed. If the ‘‘Enable’’ is set to 1, a value above the ‘‘Temp Alert’’ threshold shall generate an alert message. If the ‘‘Enable’’ is set to 2, a value below the ‘‘Temp Alert’’ threshold shall generate an alert message. If the ‘‘Enable’’ is set to 0, alert generation is disabled.

EXAMPLE 9 — SERVICE3 DISPLAY SCREEN

To access this display from the **LID default** screen:

1. Press **MENU** .
2. Press **SERVICE** .
3. Scroll down to highlight **EQUIPMENT SERVICE**.
4. Press **SELECT** .
5. Scroll down to highlight **SERVICE3**.

DESCRIPTION	CONFIGURABLE RANGE	UNITS	REFERENCE POINT NAME	DEFAULT VALUE
Proportional Inc Band	2-10		gv_inc	6.5
Proportional Dec Band	2-10		gv_de	6.0
Proportional ECW Gain	1-3		gv_ecw	2.0
Guide Vane Travel Limit	30-100	%	gv_lim	50

Table 2 — LID Screens (cont)

EXAMPLE 10 — MAINTENANCE (MAINT01) DISPLAY SCREEN

To access this display from the **LID default** screen:

1. Press **MENU** .
2. Press **SERVICE** .
3. Scroll down to highlight **ALGORITHM STATUS**.
4. Press **SELECT** .
5. Scroll down to highlight **MAINT01**.

DESCRIPTION	RANGE/STATUS	UNITS	REFERENCE POINT NAME
CAPACITY CONTROL			
Control Point	10-120 (–12.2-48.9)	DEG F (DEG C)	ctrlpt
Leaving Chilled Water	–40-245 (–40-118)	DEG F (DEG C)	LCW
Entering Chilled Water	–40-245 (–40-118)	DEG F (DEG C)	ECW
Control Point Error	–99-99 (–55-55)	DEG F (DEG C)	cperr
ECW Delta T	–99-99 (–55-55)	DEG F (DEG C)	ecwdt
ECW Reset	–99-99 (–55-55)	DEG F (DEG C)	ecwres
LCW Reset	–99-99 (–55-55)	DEG F (DEG C)	lcwres
Total Error + Resets	–99-99 (–55-55)	DEG F (DEG C)	error
Guide Vane Delta	–2-2	%	gvd
Target Guide Vane Pos	0-100	%	GV__TRG
Actual Guide Vane Pos	0-100	%	GV__ACT
Proportional Inc Band	2-10		gv_inc
Proportional Dec Band	2-10		gv_dec
Proportional ECW Gain	1-3		gv_ecw
Water/Brine Deadband	0.5-2 (0.3-1.1)	DEG F (DEG C)	cwdb

NOTE: Overriding is not supported on this maintenance screen. Active overrides show the associated point in alert (*). Only values with capital letter reference point names are variables available for read operation.

EXAMPLE 11 — MAINTENANCE (MAINT02) DISPLAY SCREEN

To access this display from the **LID default** screen:

1. Press **MENU** .
2. Press **SERVICE** .
3. Scroll down to highlight **CONTROL ALGORITHM STATUS**.
4. Press **SELECT** .
5. Scroll down to highlight **MAINT02**.
6. Press **SELECT** .

DESCRIPTION	RANGE/STATUS	UNITS	REFERENCE POINT NAME
OVERRIDE/ALERT STATUS			
MOTOR WINDING TEMP	–40-245 (–40-118)	DEG F (DEG C)	MTRW
Override Threshold	150-200 (66-93)	DEG F (DEG C)	mt_over
CONDENSER PRESSURE	–0-420 (–0-2896)	PSI (kPa)	CRP
Override Threshold	90-200 (621-1379)	PSI (kPa)	cp_over
EVAPORATOR REFRIG TEMP	–40-245 (–40-118)	DEG F (DEG C)	ERT
Override Threshold	2-45 (1-7.2)	DEG F (DEG C)	rt_over
DISCHARGE TEMPERATURE	–40-245 (–40-118)	DEG F (DEG C)	CMPD
Alert Threshold	125-200 (52-93)	DEG F (DEG C)	cd_alert
BEARING TEMPERATURE	–40-245 (–40-118)	DEG F (DEG C)	MTRB
Alert Threshold	165-185 (74-85)	DEG F (DEG C)	tb_alert

NOTE: Overriding is not supported on this maintenance screen. Active overrides show the associated point in alert (*). Only values with capital letter reference point names are variables available for read operation.

Table 2 — LID Screens (cont)

EXAMPLE 12 — MAINTENANCE (MAINT03) DISPLAY SCREEN

To access this display from the **LID default** screen:

1. Press **MENU** .
2. Press **SERVICE** .
3. Scroll down to highlight **CONTROL ALGORITHM STATUS**.
4. Press **SELECT** .
5. Scroll down to highlight **MAINT03**.
6. Press **SELECT** .

DESCRIPTION	RANGE/STATUS	UNITS	REFERENCE POINT NAME
SURGE/HGBP ACTIVE ?	NO/YES		
Active Delta P	0-200 (0-1379)	PSI (kPa)	dp_a
Active Delta T	0-200 (0-111)	DEG F (DEG C)	dt_a
Calculated Delta T	0-200 (0-111)	DEG F (DEG C)	dt_c
Surge Protection Counts	0-12		spc

NOTE: Override is not supported on this maintenance screen. Only values with capital letter reference point names are variables available for read operation.

EXAMPLE 13 — MAINTENANCE (MAINT04 DISPLAY SCREEN

To access this display from the **LID default** screen:

1. Press **MENU** .
2. Press **SERVICE** .
3. Scroll down to highlight **CONTROL ALGORITHM STATUS**.
4. Press **SELECT** .
5. Scroll down to highlight **MAINT04**.
6. Press **SELECT** .

DESCRIPTION	RANGE/STATUS	UNITS	REFERENCE POINT NAME
LEAD/LAG: Configuration	DISABLE,LEAD,LAG,STANDBY, INVALID		leadlag
Current Mode	DISABLE,LEAD,LAG,STANDBY, CONFIG		llmode
Load Balance Option	DISABLE/ENABLE		loadbal
LAG Start Time	20-60	MIN	lagstart
LAG Stop Time	20-60	MIN	lagstop
Prestart Fault Time	20-30	MIN	preflt
Pulldown: Delta T/Min	x.xx	Δ DEG F (Δ DEG C)	pull_dt
Satisfied?	No/Yes		pull_sat
LEAD CHILLER in Control	No/Yes		leadctrl
LAG CHILLER: Mode	Reset,Off,Local,CCN		lagmode
Run Status	Timeout,Recycle,Startup,Ramping,Running Demand,Override,Shutdown,Abnormal,Pumpdown		lagstat
Start/Stop	Stop,Start,Retain		lag_s_s
Recovery Start Request	No/Yes		lag_rec
STANDBY CHILLER: Mode	Reset,Off,Local,CCN		stdmode
Run Status	Timeout,Recycle,Startup,Ramping,Running Demand,Override,Shutdown,Abnormal,Pumpdown		stdstat
Start/Stop	Stop,Start,Retain		std_s_s
Recovery Start Request	No/Yes		std_rec

NOTES:
1. Only values with capital letter reference point names are variables available for read operation. Forcing is not supported on this maintenance screen.
2. Δ = delta degrees.

PIC System Functions

NOTE: Throughout this manual, words printed in both capital letters and italics are values that may be viewed on the LID. See Table 2 for examples of LID screens. Point names are listed in the Description column. An overview of LID operation and menus is given in Fig. 12-18.

CAPACITY CONTROL — The PIC controls the chiller capacity by modulating the inlet guide vanes in response to chilled water temperature changes away from the *CONTROL POINT.* The *CONTROL POINT* may be changed by a CCN network device or is determined by the PIC adding any active chilled water reset to the chilled water *SET POINT.* The PIC uses the *PROPORTIONAL INC (Increase) BAND, PROPORTIONAL DEC (Decrease) BAND,* and the *PROPORTIONAL ECW (Entering Chilled Water) GAIN* to determine how fast or slow to respond. *CONTROL POINT* may be viewed/overridden on the Status screen, Status01 selection.

ENTERING CHILLED WATER CONTROL — If this option is enabled, the PIC uses *ENTERING CHILLED WATER* temperature to modulate the vanes instead of *LEAVING CHILLED WATER* temperature. *ENTERING CHILLED WATER* control option may be viewed/modified on the Equipment Configuration table, Config table.

DEADBAND — This is the tolerance on the chilled water/brine temperature *CONTROL POINT.* If the water temperature goes outside the *DEADBAND,* the PIC opens or closes the guide vanes in response until it is within tolerance. The PIC may be configured with a 0.5 to 2 F (0.3 to 1.1 C) deadband. *DEADBAND* may be viewed or modified on the Equipment Service1 screem.

For example, a 1° F (0.6° C) deadband setting controls the water temperature within ±0.5° F (0.3° C) of the control point. This may cause frequent guide vane movement if the chilled water load fluctuates frequently. A value of 1° F (0.6° C) is the default setting.

PROPORTIONAL BANDS AND GAIN — Proportional band is the rate at which the guide vane position is corrected in proportion to how far the chilled water/brine temperature is from the control point. Proportional gain determines how quickly the guide vanes react to how quickly the temperature is moving from CONTROL POINT.

The proportional band can be viewed/modified on the LID. There are two response modes, one for temperature response above the control point, the other for response below the control point.

The first type is called *PROPORTIONAL INC BAND,* and it can slow or quicken vane response to chilled water/brine temperature above *DEADBAND.* It can be adjusted from a setting of 2 to 10; the default setting is 6.5. *PROPORTIONAL DEC BAND* can slow or quicken vane response to chilled water temperature below deadband plus control point. It can be adjusted on the LID from a setting of 2 to 10. The default setting is 6.0. Increasing either of these settings will cause the vanes to respond slower than at a lower setting.

The *PROPORTIONAL ECW GAIN* can be adjusted at the LID display from a setting of 1.0 to 3.0, with a default setting of 2.0. Increase this setting to increase guide vane response to a change in entering chilled water temperature. The proportional bands and gain may be viewed/modified on the Equipment Service3 table.

DEMAND LIMITING — The PIC will respond to the *ACTIVE DEMAND LIMIT* set point by limiting the opening of the guide vanes. It will compare the set point to either *COMPRESSOR MOTOR LOAD* or *COMPRESSOR MOTOR CURRENT* (percentage), depending on how the control is configured for the *DEMAND LIMIT SOURCE,* which is accessed on the SERVICE1 table. The default setting is current limiting.

CHILLER TIMERS — The PIC maintains 2 runtime clocks, known as *COMPRESSOR ONTIME* and *SERVICE ONTIME*. *COMPRESSOR ONTIME* indicates the total lifetime compressor run hours. This timer can register up to 500,000 hours before the clock turns back to zero. The *SERVICE ONTIME* is a resettable timer that can be used to indicate the hours since the last service visit or any other reason. The time can be changed from the LID to whatever value is desired. This timer can register up to 32,767 hours before it rolls over to zero.

The chiller also maintains a start-to-start timer and a stop-to-start timer. These timers limit how soon the chiller can be started. See the Start-Up/Shutdown/Recycle Sequence section, page 36, for operational information.

OCCUPANCY SCHEDULE — This schedule determines when the chiller is either occupied or unoccupied.

Each schedule consists of from one to 8 occupied/unoccupied time periods, set by the operator. These time periods can be set to be in effect, or not in effect, on each day of the week and for holidays. The day begins with 0000 hours and ends with 2400 hours. The chiller is in OCCUPIED mode unless an unoccupied time period is in effect.

The chiller will shut down when the schedule goes to UNOCCUPIED. These schedules can be set up to follow the building schedule or to be 100% OCCUPIED if the operator wishes. The schedules also can be bypassed by forcing the Start/Stop command on the PIC Status screen to start. The schedules also can be overridden to keep the unit in an OCCUPIED mode for up to 4 hours, on a one-time basis.

Figure 17 shows a schedule for a typical office building with a 3-hour, off-peak cool down period from midnight to 3 a.m., following a weekend shutdown. Holiday periods are in an unoccupied mode 24 hours per day. The building operates Monday through Friday, 7:00 a.m. to 6:00 p.m., and Saturdays from 6:00 a.m. to 1:00 p.m. This schedule also includes the Monday midnight to 3:00 a.m. weekend cool-down schedule.

NOTE: This schedule is for illustration only, and is not intended to be a recommended schedule for chiller operation.

Whenever the chiller is in the LOCAL mode, it uses Occupancy Schedule 01. When the chiller is in the Ice Build Time Schedule mode, it uses Occupancy Schedule 02. When the chiller is in CCN mode, it uses Occupancy Schedule 03.

The CCN schedule number is defined on the Config display screen in the Equipment Configuration table. See Table 2, Example 5. The schedule number can be changed to any value from 03 to 99. If this schedule number is changed on the Config table, the operator must use the Attach to Network Device table to upload the new number into the Schedule screen. See Fig. 16.

Safety Controls — The PIC monitors all safety control inputs and, if required, shuts down the chiller or limits the guide vanes to protect the chiller from possible damage from any of the following conditions:

- high bearing temperature
- high motor winding temperature
- high discharge temperature
- low oil pressure
- low cooler refrigerant temperature/pressure
- condenser high pressure or low pressure
- inadequate water/brine cooler and condenser flow
- high, low, or loss of voltage
- excessive motor acceleration time
- excessive starter transition time
- lack of motor current signal
- excessive motor amps
- excessive compressor surge
- temperature and transducer faults

Starter faults or optional protective devices within the starter can shut down the chiller. These devices depend on what has been purchased as options.

⚠ CAUTION

If compressor motor overload occurs, check the motor for grounded or open phases before attempting a restart.

If the controller initiates a safety shutdown, it displays the fault on the LID display with a primary and a secondary message, energizes an alarm relay in the starter, and blinks the alarm light on the control center. The alarm is stored in memory and can be viewed in the PIC alarm table along with a message for troubleshooting.

To give a more precise warning on the operating condition of the chiller, the operator also can define alert limits on various monitored inputs. Safety contact and alert limits are defined in Table 3. Alarm and alert messages are listed in the Troubleshooting Guide section, page 59.

Table 3 — Protective Safety Limits and Control Settings

MONITORED PARAMETER	LIMIT	APPLICABLE COMMENTS
TEMPERATURE SENSORS OUT OF RANGE	–40 to 245 F (–40 to 118.3 C)	Must be outside range for 2 seconds
PRESSURE TRANSDUCERS OUT OF RANGE	0.08 to 0.98 Voltage Ratio	Must be outside range for 2 seconds. Ratio = Input Voltage ÷ Voltage Reference
COMPRESSOR DISCHARGE TEMPERATURE	>220 F (104.4 C)	Preset, alert setting configurable
MOTOR WINDING TEMPERATURE	>220 F (104.4 C)	Preset, alert setting configurable
BEARING TEMPERATURE	>185 F (85 C)	Preset, alert setting configurable
EVAPORATOR REFRIGERANT TEMPERATURE	<33 F (for water chilling) (0.6° C)	Preset, configure chilled medium for water (Service1 table)
	<Brine Refrigerant Trippoint (set point adjustable from 0 to 40 F [–18 to 4 C] for brine chilling)	Configure chilled medium for brine (Service1 table). Adjust brine refrigerant trippoint for proper cutout
TRANSDUCER VOLTAGE	<4.5 vdc > 5.5 vdc	Preset
CONDENSER PRESSURE — SWITCH	>263 ± 7 psig (1813 ± 48 kPa), reset at 180 ± 10 (1241 ± 69 kPa)	Preset
— CONTROL	185 psig (1276 kPa)	Preset
OIL PRESSURE — SWITCH	Cutout <11 psid (76 kPad) ± 1.5 psid (10.3 kPad) Cut-in >16.5 psid (114 kPad) ± 4 psid (27.5 kPad)	Preset, no calibration needed
— CONTROL	Cutout <15 psid (103 kPad) Alert <18 psid (124 kPad)	Preset
LINE VOLTAGE — HIGH	>110% for one minute	Preset, based on transformed line voltage to 24 vac rated-input to the Starter Management Module. Also monitored at PSIO power input.
— LOW	<90% for one minute or ⩽85% for 3 seconds	
— SINGLE-CYCLE	<50% for one cycle	
COMPRESSOR MOTOR LOAD	>110% for 30 seconds	Preset
	<10% with compressor running	Preset
	>10% with compressor off	Preset
STARTER ACCELERATION TIME (Determined by inrush current going below 100% compressor motor load)	>45 seconds	For chillers with reduced voltage mechanical and solid-state starters
	>10 seconds	For chillers with full voltage starters (Configured on Service1 table)
STARTER TRANSITION	>75 seconds	Reduced voltage starters only
CONDENSER FREEZE PROTECTION	Energizes condenser pump relay if condenser refrigerant temperature or condenser entering water temperature is below the configured condenser freeze point temperature. Deenergizes when the temperature is 5 F (3 C) above condenser freeze point temperature.	CONDENSER FREEZE POINT configured in Service01 table with a default setting of 34 F (1 C).

Flow Switches (Field Supplied)

Operate water pumps with chiller off. Manually reduce water flow and observe switch for proper cutout. Safety shutdown occurs when cutout time exceeds 3 seconds.

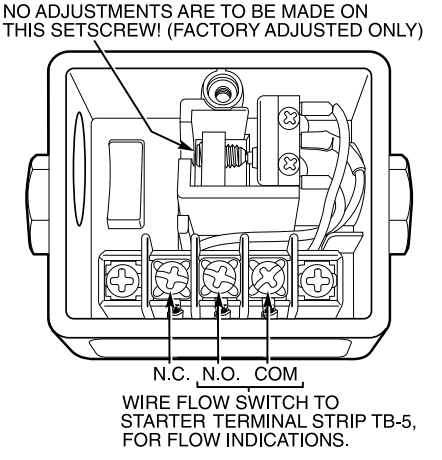

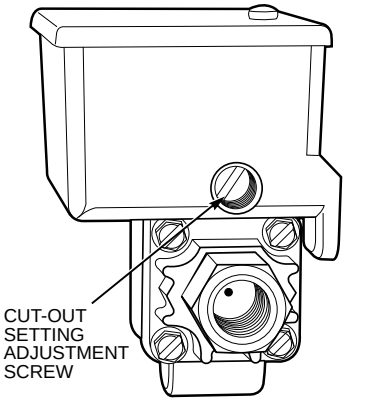

Shunt Trip (Option) — The shunt trip function of the PIC is a safety trip. The shunt trip is wired from an output on the SMM to a shunt trip-equipped motor circuit breaker. If the PIC tries to shut down the compressor through normal shutdown procedure but is unsuccessful for 30 seconds, the shunt trip output is energized and causes the circuit breaker to trip off. If ground fault protection has been applied to the starter, the ground fault trip will also energize the shunt trip to trip the circuit breaker. The shunt trip feature can be tested through the Control Test feature.

Default Screen Freeze — Whenever an alarm occurs, the LID default screen will freeze and display the condition of the chiller at the time of alarm. Knowledge of the operating state of the chiller at the time an alarm occurs is useful when troubleshooting. Current chiller information can be viewed on the Status tables. Once all existing alarms are cleared (by pressing the RESET softkey), the default LID will return normal operation.

Ramp Loading Control — The ramp loading control slows down the rate at which the compressor loads up. This control can prevent the compressor from loading up during the short period of time when the chiller is started and the chilled water loop has to be brought down to normal design conditions. This helps reduce electrical demand charges by slowly bringing the chilled water to control point. However, the total power draw during this period remains almost unchanged.

There are 2 methods of ramp loading with the PIC. Ramp loading can be based on chilled water temperature or on motor load.

1. Temperature ramp loading limits the rate at which either leaving chilled water or entering chilled water temperature decreases by an operator-configured rate. The lowest temperature ramp table will be used the first time the chiller is started (at commissioning). The lowest temperature ramp rate will also be used if chiller power has been off for 3 hours or more (even if the motor ramp load is selected).
2. Motor load ramp loading limits the rate at which the compressor motor current or compressor motor load increases by an operator-configured rate.

The *TEMP (Temperature) PULLDOWN*, *LOAD PULL DOWN*, and *SELECT RAMP TYPE* may be viewed/modified on the LID Equipment Configuration table, Config display screen (see Table 2, Example 5). Motor load is the default type.

Capacity Override (Table 4) — Capacity overrides can prevent some safety shutdowns caused by exceeding motor amperage limit, refrigerant low temperature safety limit, motor high temperature safety limit, and condenser high pressure limit. In all cases there are 2 stages of compressor vane control.

1. The vanes are prevented from opening further, and the status line on the LID indicates the reason for the override.
2. The vanes are closed until the condition decreases below the first step set pointt. Then the vanes are released to normal capacity control.

Whenever the motor current demand limit set point is reached, it activates a capacity override, again, with a 2-step process. Exceeding 110% of the rated load amps for more than 30 seconds will initiate a safety shutdown.

The compressor high lift (surge prevention) set point will cause a capacity override as well. When the surge prevention set point is reached, the controller normally will only prevent the guide vanes from opening. If so equipped, the hot gas bypass valve will open instead of holding the vanes.

Table 4 — Capacity Overrides

OVERRIDE CAPACITY CONTROL	FIRST STAGE SET POINT			SECOND STAGE SET POINT	OVERRIDE TERMINATION
	View/Modify on LID Screen	Default Value	Configurable Range	Value	Value
HIGH CONDENSER PRESSURE	Equipment Service1	125 psig (862 kPa)	90 to 200 psig (620 to 1379 kPa)	>Override Set Point + 4 psid (28 kPad)	<Override Set Point
HIGH MOTOR TEMPERATURE	Equipment Service1	>200 F (93.3 C)	150 to 200 F (66 to 93 C)	>Override Set Point +10° F (6° C)	<Override Set Point
LOW REFRIGERANT TEMPERATURE (Refrigerant Override Delta Temperature)	Equipment Service1	<3° F (1.6° C) (Above Trippoint)	2° to 5° F (1° to 3° C)	⩽Trippoint + Override ΔT –1° F (0.56° C)	>Trippoint + Override ΔT +2° F (1.2° C)
HIGH COMPRESSOR LIFT (Surge Prevention)	Equipment Service1	Min: T1 — 1.5° F (0.8° C) P1 — 50 psid (345 kPad) Max: T2 — 10° F (5.6° C) P2 — 85 psid (586 kPad)	0.5° to 15° F (0.3° to 8.3° C) 30 to 170 psid (207 to1172 kPad) 0.5° to 15° F (0.3° to 8.3° C) 30 to 170 psid (207 to 1172 kPad)	None	Within Lift Limits Plus Surge/ HGBP Deadband Setting
MANUAL GUIDE VANE TARGET	Control Algorithm Maint01	Automatic	0 to 100%	None	Release of Manual Control
MOTOR LOAD — ACTIVE DEMAND LIMIT	Status01	100%	40 to 100%	⩾5% of Set Point	2% Lower Than Set Point

High Discharge Temperature Control — If the discharge temperature increases above 160 F (71.1 C), the guide vanes are proportionally opened to increase gas flow through the compressor. If the leaving chilled water temperature is then brought 5° F (2.8° C) below the control set point temperature, the controls will bring the chiller into the recycle mode.

Oil Sump Temperature Control — The oil sump temperature control is regulated by the PIC, which uses the oil heater relay when the chiller is shut down.

As part of the pre-start checks executed by the controls, oil sump temperature is compared to evaporator refrigerant temperature. If the difference between these 2 temperatures is 50 F (27.8 C) or less, the start-up will be delayed until the oil temperature is 50 F (27.8 C) or more. Once this temperature is confirmed, the start-up continues.

The oil heater relay is energized whenever the chiller compressor is off and the oil sump temperature is less than 150 F (65.6 C) or the oil sump temperature is less than the cooler refrigerant temperature plus 70° F (39° C). The oil heater is turned off when the oil sump temperature is either:

1) more than 160 F (71.1 C), or:
2) the oil sump temperature is more than 155 F (68.3 C) and more than the cooler refrigerant temperature plus 75° F (41.6° C).

The oil heater is always off during start-up or when the compressor is running.

The oil pump is also energized during the time the oil is being heated (for 60 seconds at the end of every 30 minutes).

Oil Cooler — The oil must be cooled when the compressor is running. This is accomplished through a small, plate-type heat exchanger located behind the oil pump. The heat exchanger uses liquid condenser refrigerant as the cooling liquid. Refrigerant thermostatic expansion valves (TXVs) regulate refrigerant flow to control oil temperature entering the bearings. The bulbs for the expansion valves are strapped to the oil supply line leaving the heat exchanger, and the valves are set to maintain 110 F (43 C).

NOTE: The expansion valve is not adjustable. Oil sump temperature may be at a lower temperature.

Remote Start/Stop Controls — A remote device, such as a timeclock that uses a set of contacts, may be used to start and stop the chiller. However, the device should not be programmed to start and stop the chiller in excess of 2 or 3 times every 12 hours. If more than 8 starts in 12 hours occur, an Excessive Starts alarm displays, preventing the chiller from starting. The operator must reset the alarm at the LID in order to override the starts counter and start the chiller. If Automatic Restart After a Power Failure is not activated when a power failure occurs, and the remote contact is closed, the chiller will indicate an alarm because of the loss of voltage.

The contacts for Remote Start are wired into the starter at terminal strip TB5, terminals 8A and 8B. See the certified drawings for further details on contact ratings. The contacts must be dry (no power).

Spare Safety Inputs — Normally closed (NC) discrete inputs for additional field-supplied safeties may be wired to the spare protective limits input channel in place of the factory-installed jumper. (Wire multiple inputs in series.) The opening of any contact will result in a safety shutdown and LID display. Refer to the certified drawings for safety contact ratings.

Analog temperature sensors may also be added to the options modules, if installed. These may be programmed to cause an alert on the CCN network but will not shut the chiller down.

Spare Safety Alarm Contacts — Two spare sets of alarm contacts are provided within the starter. The contact ratings are provided in the certified drawings. The contacts are located on terminal strip TB6, terminals 5A and 5B, and terminals 5C and 5D.

Condenser Pump Control — The chiller will monitor the *CONDENSER PRESSURE* and may turn on this pump if the pressure becomes too high whenever the compressor is shut down. *CONDENSER PRESSURE OVERRIDE* is used to determine this pressure point. This value is found on the Equipment Service1 LID table and has a default value (Table 4). If the *CONDENSER PRESSURE* is greater than or equal to the *CONDENSER PRESSURE OVERRIDE*, and the *ENTERING CONDENSER WATER TEMP (Temperature)* is less than 115 F (46 C), then the condenser pump will energize to try to decrease the pressure. The pump will turn off when the condenser pressure is less than the pressure override less 5 psi (34 kPa), or the *CONDENSER REFRIG (Refrigerant) TEMP* is within 3° F (2° C) of the *ENTERING CONDENSER WATER* temperature.

Condenser Freeze Prevention — This control algorithm helps prevent condenser tube freeze-up by energizing the condenser pump relay. If the pump is controlled by the PIC, starting the pump will help prevent the water in the condenser from freezing. Condenser freeze prevention can occur whenever the chiller is not running except when it is either actively in pumpdown or in Pumpdown Lockout with the freeze prevention disabled (refer to Control Test table, Pumpdown/Terminate Lockout tables).

When the *CONDENSER REFRIG TEMP* is less than or equal to the *CONDENSER FREEZE POINT*, or the *ENTERING CONDENSER WATER* temperature is less than or equal to the *CONDENSER FREEZE POINT*, then the *CONDENSER WATER PUMP* shall be energized until the *CONDENSER REFRIG TEMP* is greater than the *CONDENSER FREEZE POINT* plus 5° F (2.7° C). An alarm will be generated if the chiller is in PUMPDOWN mode and the pump is energized. An alert will be generated if the chiller is not in PUMPDOWN mode and the pump is energized. If in recycle shutdown, the mode will transition to a non-recycle shutdown.

Tower-Fan Relay — Low condenser water temperature can cause the chiller to shut down on low refrigerant temperature. The tower fan relay, located in the starter, is controlled by the PIC to energize and deenergize as the pressure differential between cooler and condenser vessels changes in order to prevent low condenser water temperature and to maximize chiller efficiency. The tower-fan relay can only accomplish this if the relay has been added to the cooling tower temperature controller. The *TOWER FAN RELAY* is turned on whenever the *CONDENSER WATER PUMP* is running, flow is verified, and the difference between cooler and condenser pressure is more than 30 psid (207 kPad) for entering condenser water temperature is greater than 85 F (29 C). The *TOWER FAN RELAY* is deenergized when the condenser pump is off, flow is lost, the evaporator refrigerant temperature is less than the override temperature, or the differential pressure is less than 28 psid (193 kPad) and entering condensing water is less than 80 F (27 C).

IMPORTANT: A field-supplied water temperature control system for condenser water should be installed. The system should maintain the leaving condenser water temperature at a temperature that is 20° F (11° C) above the leaving chilled water temperature.

⚠ CAUTION

The tower-fan relay control is not a substitute for a condenser water temperature control. When used with a Water Temperature Control system, the tower fan relay control can be used to help prevent low condenser water temperatures.

Auto. Restart After Power Failure — This option may be enabled or disabled and may be viewed/modified on the Config screen of Equipment Configuration table. If enabled, the chiller will start up automatically after a single cycle dropout; low, high, or loss of voltage has occurred; and the power is within ±10% of normal. The 15- and 3-minute inhibit timers are ignored during this type of start-up.

When power is restored after the power failure and if the compressor had been running, the oil pump will energize for one minute before energizing the evaporator pump. Auto. restart will then continue like a normal start-up.

If power to the PSIO module has been off for more than 3 hours or the timeclock has been set for the first time, start the compressor with the slowest termperature-based ramp load rate possible in order to minimize oil foaming.

The oil pump is energized occasionally during the time the oil is being brought up to proper temperature in order to eliminate refrigerant that has migrated to the oil sump during the power failure. The pump turns on for 60 seconds at the end of every 30-minute period until the chiller is started.

Water/Brine Reset — Three types of chilled water or brine reset are available and can be viewed or modified on the Equipment Configuration table Config selection.

The LID default screen status message indicates when the chilled water reset is active. The Control Point temperature on the Status01 table indicates the chiller's current reset temperature.

To activate a reset type, input all configuration information for that reset type in the Config table. Then input the reset type number in the *SELECT/ENABLE RESET TYPE* input line.

RESET TYPE 1: REQUIRES AN OPTIONAL 8-INPUT MODULE — Automatic chilled water temperature reset based on a 4 to 20 mA input signal. This type permits up to ± 30° F (± 16° C) of automatic reset to the chilled water or brine temperature set point, based on the input from a 4 to 20 mA signal. This signal is hardwired into the number one 8-input module.

If the 4-20 mA signal to the 8-input module is externally powered, the signal is wired to terminals J1-5(+) and J1-6(–). If the signal is internally powered by the 8-input module (for example, when using variable resistance), the signal is wired to J1-7(+) and J1-6(–). The PIC must now be configured on the Service2 table to ensure that the appropriate power source is identified.

RESET TYPE 2: REQUIRES AN OPTIONAL 8-INPUT MODULE — Automatic chilled water temperature reset based on a remote temperature sensor input. This type permits ± 30° F (± 16° C) of automatic reset to the set point based on a temperature sensor wired to the number one 8-input module (see wiring diagrams or certified drawings).

The temperature sensor must be wired to terminal J1-19 and J1-20.

To configure Reset Type 2, enter the temperature of the remote sensor at the point where no temperature reset will occur. Next, enter the temperature at which the full amount of reset will occur. Then, enter the maximum amount of reset required to operate the chiller. Reset Type 2 can now be activated.

RESET TYPE 3 — Automatic chilled water temperature reset based on cooler temperature difference. This type of reset will add ± 30° F (± 16° C) based on the temperature difference between entering and leaving chilled water temperature. This is the only type of reset available without the need for a number one 8-input module. No wiring is required for this type, since it already uses the cooler water sensors.

To configure Reset Type 3, enter the chilled water temperature difference (the difference between entering and leaving chilled water) at which no temperature reset occurs. This chilled water temperature difference is usually the full design load temperature difference. The difference in chilled water temperature at which the full amount of reset will occur is now entered on the next input line. Next, the amount of reset is entered. Reset Type 3 can now be activated.

Demand Limit Control Option (Requires Optional 8-Input Module) — The demand limit may be externally controlled with a 4 to 20 mA signal from an energy management system (EMS). The option is set up on the Config table. When enabled, the control is set for 100% demand with 4 mA and an operator configured minimum demand set point at 20 mA.

The Demand Reset input from an energy management system is hardwired into the number one, 8-input module. The signal may be internally powered by the module or externally powered. If the signal is externally powered, the signal is wired to terminals J1-1(+) and J1-2(–). If the signal is internally powered, the signal is wired to terminals J1-3(+) and J1-2(–). When enabled, the control is set for 100% demand with 4 mA and an operator configured minimum demand set point at 20 mA.

Surge Prevention Algorithm — This is an operator configurable feature that can determine if lift conditions are too high for the compressor and then take corrective action. Lift is defined as the difference between the pressure at the impeller eye and the impeller discharge. The maximum lift that a particular impeller wheel can perform varies with the gas flow across the impeller and the size of the wheel.

The algorithm first determines if corrective action is necessary. This is done by checking 2 sets of operator configured data points, which are the MINIMUM and the MAXIMUM Load Points, (T1/P1;T2/P2). These points have default settings as defined on the Service1 table or on Table 4. These settings and the algorithm function are graphically displayed in Fig. 19 and 20. The two sets of load points on this graph (default settings are shown) describe a line which the algorithm uses to determine the maximum lift of the compressor. When the actual differential pressure between the cooler and condenser and when the temperature difference between the entering and leaving chilled water are above the line on the graph (as defined by the MINIMUM and MAXIMUM Load Points), the algorithm will go into a corrective action mode. If the actual values are below the line, the algorithm takes no action. Modification of the default set points of the MINIMUM and MAXIMUM load points is described int Input Service Configurations section on page 45.

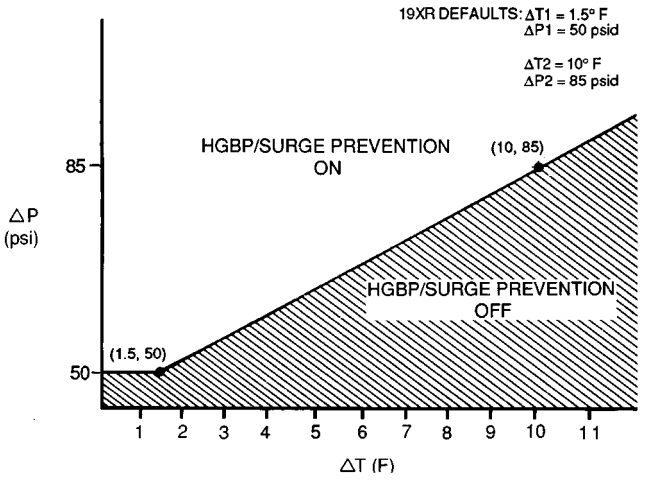

LEGEND

ΔP = (Condenser Psi) − (Cooler Psi)
ΔT = (ECW) − (LCW)

ECW — Entering Chilled Water
HGBP — Hot Gas Bypass
LCW — Leaving Chilled Water

Fig. 19 — 19XR Hot Gas Bypass/Surge Prevention

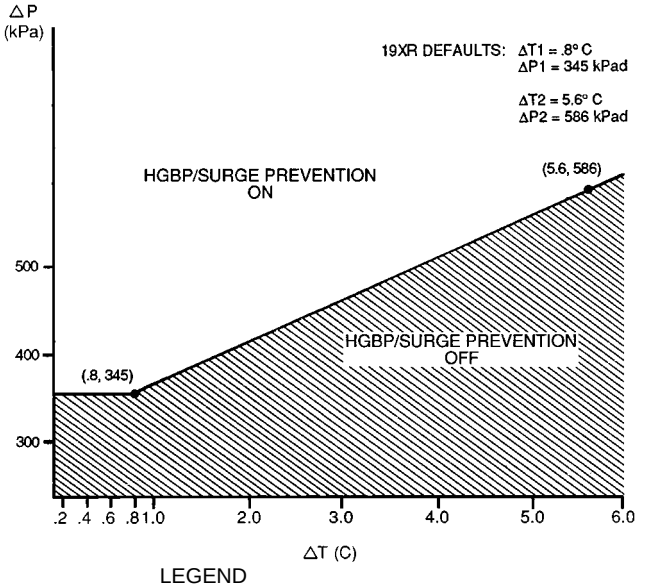

LEGEND

ΔP = (Condenser kPa) − (Cooler kPa)
ΔT = (ECW) − (LCW)

ECW — Entering Chilled Water
HGBP — Hot Gas Bypass
LCW — Leaving Chilled Water

Fig. 20 — 19XR With Default Metric Settings

Corrective action can be taken by making one of 2 choices. If a hot gas bypass line is present and the hot gas is configured on the Service1 table, then the hot gas bypass valve can be energized. If a hot gas bypass is not present, then hold the guide vanes. See Table 4, Capacity Overrides. Both of these corrective actions will try to reduce the lift experienced by the compressor and help to prevent a surge condition. A surge condition occurs when the lift becomes so high that the gas flow across the impeller reverses. This condition can eventually cause chiller damage. The surge prevention algorithm is intended to notify the operator that chiller operating conditions are marginal and to take action to help prevent chiller damage such as lowering entering condenser water temperature.

Surge Protection — Compressor surge can be determined by the PIC through operator configured settings. Surge will cause amperage fluctuations of the compressor motor. The PIC monitors these amperage swings, and if the swing is greater than the configurable setting in one second, then one surge count has occurred. The *SURGE DELTA PERCENT AMPS* setting is displayed and configured on the Service1 screen. It has a default setting of 25% amps. *SURGE PROTECTION COUNTS* can be monitored on the Maint03 table.

A surge protection shutdown of the chiller will occur whenever the surge protection counter reaches 12 counts within an operator specified time, known as the *SURGE TIME PERIOD*. The *SURGE TIME PERIOD* is displayed and configured on the Service1 screen. It has a default of 5 minutes.

Lead/Lag Control

NOTE: Lead/lag control is only available on chillers with PSIO Software Version 09 or higher.

Lead/lag is a control system process that automatically starts and stops a lag or second chiller in a 2-chiller water system. Refer to Fig. 15 and 16 for menu, table, and screen selection information. On chillers that have PSIO software with Lead/Lag capability, it is possible to use the PIC controls to perform the lead/lag function on 2 chillers. A third chiller can be added to the lead/lag system as a standby chiller to start up in case the lead or lag chiller in the system has shut down during an alarm condition and additional cooling is required.

NOTE: Lead/lag configuration is viewed and edited from the Lead/Lag display screen in the Equipment Configuration table (located in the Service menu). See Table 2, Example 6. Lead/lag status during chiller operation is viewed on the MAINT04 display screen in the Control Algorithm Status table. See Table 2, Example 13.

Lead/Lag System Requirements:

- all chillers must have PSIO software capable of performing the lead/lag function
- water pumps MUST be energized from the PIC controls
- water flows should be constant
- CCN Time Schedules for all chillers must be identical

Operation Features:

- 2 chiller lead/lag
- addition of a third chiller for backup
- manual rotation of lead chiller
- load balancing if configured
- staggered restart of the chillers after a power failure
- chillers may be piped in parallel or in series chilled water flow

COMMON POINT SENSOR INSTALLATION — Lead/lag operation does not require a common chilled water point sensor. Common point sensors can be added to the 8-input option module, if desired. Refer to the certified drawings for termination of sensor leads.

NOTE: If the common point sensor option is chosen on a chilled water system, both chillers should have their own 8-input option module and common point sensor installed. Each chiller will use its own common point sensor for control, when that chiller is designated as the lead chiller. The PIC cannot read the value of common point sensors installed on other chillers in the chilled water system.

When installing chillers in series, a common point sensor should be used. If a common point sensor is not used, the leaving chilled water sensor of the upstream chiller must be moved into the leaving chilled water pipe of the downstream chiller.

If return chilled water control is required on chillers piped in series, the common point return chilled water sensor should be installed. If this sensor is not installed, the return chilled water sensor of the downstream chiller must be relocated to the return chilled water pipe of the upstream chiller.

To properly control the common supply point temperature sensor when chillers are piped in parallel, the water flow through the shutdown chillers must be isolated so that no water bypass around the operating chiller occurs. The common point sensor option must not be used if water bypass around the operating chiller is occurring.

CHILLER COMMUNICATION WIRING — Refer to the chiller's Installation Instructions, Carrier Comfort Network Interface section on page 44 for information on chiller communication wiring.

LEAD/LAG OPERATION — The PIC control provides the ability to operate 2 chillers in the LEAD/LAG mode. It also provides the additional ability to start a designated standby chiller when either the lead or lag chiller is faulted and capacity requirements are not met. The lead/lag option operates in CCN mode only. If any other chiller configured for lead/lag is set to the LOCAL or OFF modes, it will be unavailable for lead/lag operation.

NOTE: Lead/lag configuration is viewed and edited on the Lead/Lag screen, under the Equipment Configuration table of the Service menu. See Table 2, Example 6. Lead/lag status during chiller operation is viewed on the MAINT04 screen in the Control Algorithm Status table (Table 2 Example 13).

Lead/Lag Chiller Configuration and Operation — The configured lead chiller is identified when the *LEAD/LAG SELECT* value for that chiller is set to "1." The configured lag chiller is identified when the *LEAD/LAG SELECT* for that chiller is set to "2." The standby chiller is configured to a value of "3." A value of "0" disables the lead/lag in that chiller.

To configure the *LAG ADDRESS* value on the *LEAD/LAG* Configuration table, always use the address of the other chiller on the system for this value. Using this address will make it easier to rotate the lead and lag chillers.

If the address assignments placed into the *LAG ADDRESS* and *STANDBY ADDRESS* values conflict, the lead/lag will be disabled and an alert (!) message will occur. For example, if the *LAG ADDRESS* matches the lead chiller's address, the lead/lag will be disabled and an alert (!) message will occur. The lead/lag maintenance screen (MAINT04) will display the message 'INVALID CONFIG' in the *LEAD/LAG CONFIGURATION* and *CURRENT MODE* fields.

The lead chiller responds to normal start/stop controls such as occupancy schedule, forced start/stop, and remote start contact inputs. After completing start up and ramp loading, the PIC evaluates the need for additional capacity. If additional capacity is needed, the PIC initiates the start up of the chiller configured at the *LAG ADDRESS*. If the lag chiller is faulted (in alarm) or is in the OFF or LOCAL modes, then the chiller at the *STANDBY ADDRESS* (if configured) is requested to start. After the second chiller is started and is running, the lead chiller will monitor conditions and evaluate whether the capacity has reduced enough for the lead chiller to sustain the system alone. If the capacity is reduced enough for the lead chiller to sustain the *CONTROL POINT* temperatures alone, then the operating lag chiller is stopped.

If the lead chiller is stopped in CCN mode for any reason other than an alarm (*) condition, then the lag and standby chillers are stopped. If the configured lead chiller stops for and alarm condition, then the configured lag chiller takes the lead chiller's place as the lead chiller and the standby chiller serves as the lag chiller.

If the configured lead chiller does not complete the start-up before the *PRESTART FAULT TIMER* (user configured value) elapses, then the lag chiller will start and the lead chiller will shut down. The lead chiller then monitors the start request from the acting lead chiller to start. The *PRESTART FAULT TIMER* is initiated at the time of a start request. The *PRESTART FAULT TIMER*'s function is to provide a timeout in the event that there is a prestart alert condition preventing the chiller from starting in a timely manner. The timer is configured from the Lead/Lag screen, found in the Equipment Configuration table of the Service menu.

If the lag chiller does not achieve start-up before the *PRESTART FAULT TIMER* elapses, then the lag chiller shall be stopped and the standby chiller will be requested to start, if configured and ready.

Standby Chiller Configuration and Operation — The configured standby chiller is identified as such by having the *LEAD/LAG SELECT* configured to the value of "3." The standby chiller can only operate as a replacement for the lag chiller if one of the other two chillers is in an alarm (*) condition (as shown on the LID panel). If both lead and lag chillers are in an alarm (*) condition, the standby chiller shall default to operate in CCN mode based on its configured Occupancy Schedule and remote contacts input.

Lag Chiller Start-Up Requirements — Before the lag chiller can be started, the following conditions must be met:

1. Lead chiller ramp loading must be complete.
2. Lead chiller CHILLED WATER temperature must be greater than the *CONTROL POINT* plus 1/2 the *WATER/BRINE DEADBAND*.

   NOTE: The chilled water temperature sensor may be the leaving chilled water sensor, the return water sensor, the common supply water sensor, or the common return water sensor, depending on which options are configured and enabled.
3. Lead chiller *ACTIVE DEMAND LIMIT* value must be greater than 95% of full load amps.
4. Lead chiller temperature pulldown rate of the CHILLED WATER temperature is less than 0.5° F (0.27° C) per minute.
5. The lag chiller status indicates it is in CCN mode and is not faulted. If the current lag chiller is in an alarm condition, then the standby chiller becomes the active lag chiller, if it is configured and available.
6. The configured *LAG START TIMER* entry has elapsed. The *LAG START TIMER* will start when the lead chiller ramp loading is completed. The *LAG START TIMER* entry is accessed by selecting Lead/Lag from the Equipment Configuration table of the Service menu.

When all the above requirements have been met, the lag chiller is forced to a START mode. The PIC control then monitors the lag chiller for a successful start. If the lag chiller fails to start, the standby chiller, if configured, is started.

Lag Chiller Shutdown Requirements — The following conditions must be met in order for the lag chiller to be stopped.

1. Lead chiller *COMPRESSOR MOTOR LOAD* value is less than the lead chiller percent capacity plus 15%.

   NOTE: Lead chiller percent capacity = 100 – *LAG PERCENT CAPACITY.*

   The *LAG PERCENT CAPACITY* value is configured on the Lead/Lag Configuration screen.
2. The lead chiller chilled water temperature is less than the *CONTROL POINT* plus 1/2 of the *WATER/BRINE DEADBAND*.

3. The configured *LAG STOP TIMER* entry has elapsed. The *LAG STOP TIMER* is started when the CHILLED WATER TEMPERATURE is less than the *CHILLED WATER CONTROL POINT* plus 1/2 of the *WATER/BRINE DEADBAND* and the lead chiller *COMPRESSOR MOTOR LOAD* is less than the lead chiller percent capacity plus 15%. The timer is ignored if the chilled water temperature reaches 3° F (1.67° C) below the *CONTROL POINT* and the lead chiller *COMPRESSOR MOTOR LOAD* value is less than the lead chiller percent capacity plus 15%.

FAULTED CHILLER OPERATION — If the lead chiller shuts down on an alarm (*) condition, it stops communication to the lag and standby chillers. After 30 seconds, the lag chiller will now become the acting lead chiller and will start and stop the standby chiller, if necessary.

If the lag chiller faults when the lead chiller is also faulted, the standby chiller reverts to a stand-alone CCN mode of operation.

If the lead chiller is in an alarm (*) condition (as shown on the LID panel), the RESET softkey is pressed to clear the alarm, and the chiller is placed in the CCN mode, then the lead chiller will communicate and monitor the RUN STATUS of the lag and standby chillers. If both the lag and standby chillers are running, the lead chiller will not attempt to start and will not assume the role of lead chiller until either the lag or standby chiller shuts down. If only one chiller is running, the lead chiller will wait for a start request from the operating chiller. When the configured lead chiller starts, it assumes its role as lead chiller.

LOAD BALANCING — When the *LOAD BALANCE OPTION* is enabled, the lead chiller will set the *ACTIVE DEMAND LIMIT* in the lag chiller to the lead chiller's *COMPRESSOR MOTOR LOAD* value. This value has limits of 40% to 100%. When setting the lag chiller *ACTIVE DEMAND LIMIT*, the *CONTROL POINT* will be modified to a value of 3° F (1.67° C) less than the lead chiller's *CONTROL POINT* value. If the *LOAD BALANCE OPTION* is disabled, the *ACTIVE DEMAND LIMIT* and the *CONTROL POINT* are forced to the same value as the lead chiller.

AUTO. RESTART AFTER POWER FAILURE — When an auto.restart condition occurs, each chiller may have a delay added to the start-up sequence, depending on its lead/lag configuration. The lead chiller does not have a delay. The lag chiller has a 45-second delay. The standby chiller has a 90-second delay. The delay time is added after the chiller water flow verification. The PIC controls ensure that the guide vanes are closed. After the guide vane position is confirmed, the delay for lag and standby chiller occurs prior to energizing the oil pump. The normal start-up sequence then continues. The auto. restart delay sequence occurs whether the chiller is in CCN or LOCAL mode and is intended to stagger the compressor motors from being energized simultaneously. This will help reduce the inrush demands on the building power system.

Ice Build Control

IMPORTANT: The Ice Build control option is only available on chillers with PSIO Software Version 09 and higher.

Ice build control automatically sets the chilled WATER/BRINE CONTROL POINT of the chiller to a temperature where an ice building operation for thermal storage can be accomplished.

NOTE: For ice build control to properly operate, the PIC controls must be placed in CCN mode. See Fig. 15 and 16.

The PIC can be configured for ice build operation. Configuration of ice build control is accomplished through entries in the Config table, Ice Build Setpoint table, and the Ice Build Time Schedule table. Figures 15 and 16 show how to access each entry.

The Ice Build Time Schedule defines the period during which ice build is active if the ice build option is ENABLED. If the Ice Build Time Schedule overlaps other schedules defining time, then the Ice Build Time Schedule takes priority. During the ice build period, the *WATER/BRINE CONTROL POINT* is set to the *ICE BUILD SET POINT* for temperature control. The *ICE BUILD RECYCLE OPTION* and *ICE BUILD TERMINATION* entries from a screen in the Config (configuration) table provide options for chiller recycle and termination of ice build cycle, respectively. Termination of ice build can result from the ENTERING CHILLED WATER/BRINE temperature being less than the *ICE BUILD SET POINT*, opening of the REMOTE CONTACT inputs from an ice level indicator, or reaching the end of the Ice Build Time Schedule.

ICE BUILD INITIATION — The Ice Build Time Schedule provides the means for activating ice build. The ice build time table is named OCCPC02S.

If the Ice Build Time Schedule is in OCCUPIED mode and the *ICE BUILD OPTION* is ENABLED, then ice build is active and the following events automatically take place (unless overridden by a higher authority CCN device):

1. Force *CHILLER START/STOP* to START.
2. Force *WATER/BRINE CONTROL POINT* to the *ICE BUILD SET POINT*.
3. Remove any force (Auto) on the *ACTIVE DEMAND LIMIT*.

NOTE: Items 1-3 (shown above) do not occur if the chiller is configured and operating as a lag or standby chiller for lead/lag and is actively controlled by a lead chiller. The lead chiller communicates the *ICE BUILD SET POINT*, desired *CHILLER START/STOP* state, and *ACTIVE DEMAND LIMIT* to the lag or standby chiller as required for ice build, if configured to do so.

START-UP/RECYCLE OPERATION — If the chiller is not running when ice build activates, then the PIC checks the following parameters, based on the *ICE BUILD TERMINATION* value, to avoid starting the compressor unnecessarily:

- if *ICE BUILD TERMINATION* is set to the TEMPERATURE ONLY OPTION and the *ENTERING CHILLED WATER* temperature is less than or equal to the *ICE BUILD SET POINT*;
- if *ICE BUILD TERMINATION* is set to the CONTACTS ONLY OPTION and the remote contacts are open;
- if the *ICE BUILD TERMINATION* is set to the BOTH (temperature and contacts) option and *ENTERING CHILLED WATER* temperature is less than or equal to the *ICE BUILD SET POINT* and remote contacts are open.

The *ICE BUILD RECYCLE OPTION* determines whether or not the PIC will go into a RECYCLE mode. If the *ICE BUILD RECYCLE OPTION* is set to DSABLE (disable) when the ice build terminates, the PIC will revert back to normal temperature control duty. If the *ICE BUILD RECYCLE OPTION* is set to ENABLE, when ice build terminates, the PIC will go into an *ICE BUILD RECYCLE* mode and the chilled water pump relay will remain energized to keep the chilled water flowing. If the entering *CHILLED WATER/BRINE TEMPERATURE* increases above the *ICE BUILD SET POINT* plus the *RECYCLE RESTART DELTA T* value, the compressor will restart and control the *CHILLED WATER/BRINE TEMPERATURE* to the *ICE BUILD SET POINT*.

TEMPERATURE CONTROL DURING ICE BUILD — During ice build, the capacity control algorithm uses the *WATER/BRINE CONTROL POINT* minus 5 F (2.7 C) to control the *LEAVING CHILLED WATER* temperature. The ECW OPTION and any temperature reset option are ignored during ice build. The 20 mA DEMAND LIMIT OPTION is also ignored during ice build.

TERMINATION OF ICE BUILD — Ice build termination occurs under the following conditions:

1. Ice Build Time Schedule — When the Ice Build Time Schedule transitions to UNOCCUPIED, ice build operation terminates.
2. ECW TEMPERATURE — Termination of compressor operation, based on temperature, occurs if the *ICE BUILD TERMINATION* is set to the *ICE BUILD TERMINATION TEMP* option and the *ENTERING CHILLED WATER* temperature is less than the *ICE BUILD SET POINT*. If the *ICE BUILD RECYCLE OPTION* is set to ENABLE, a recycle shutdown occurs and recycle start up is based on *LEAVING CHILLED WATER* temperature being greater than the *WATER/BRINE CONTROL POINT* plus *RECYCLE RESTART DELTA T.*
3. Remote Contacts/Ice Level Input — Termination of compressor operation occurs when *ICE BUILD TERMINATION* is set to CONTACTS ONLY OPTION and the remote contacts are open. In this case, the contacts are provided for ice level termination control. The remote contacts can still be opened and closed to start and stop the chiller when the Ice Build Time Schedule is UNOCCUPIED. The contacts are used to stop the ICE BUILD mode when the Ice Build Time Schedule is OCCUPIED.
4. ECW TEMPERATURE and Remote Contacts — Termination of compressor operation occurs when *ICE BUILD TERMINATION* is set to BOTH (temperature and contacts) option and the previously described conditions for ECW TEMPERATURE and remote contacts have occurred.

NOTE: Overriding the *CHILLER START/STOP, WATER/BRINE CONTROL POINT*, and *ACTIVE DEMAND LIMIT* variables by CCN devices (with a priority less than 4) during the ice build period is not possible. However, overriding can be accomplished with CCN during two chiller lead/lag.

RETURN TO NON-ICE BUILD OPERATIONS — Upon termination of ice build, the chiller returns to normal temperature control and start/stop schedule operation. If the *CHILLER START/STOP* or *WATER/BRINE CONTROL POINT* has been forced (with a priority less than 4), prior to entering ice build operation, then chiller START/STOP and *WATER/BRINE CONTROL POINT* forces will be removed.

Attach to Network Device Control — One of the selections on the Service menu is ATTACH TO NETWORK DEVICE. This table serves to:

- upload the Occupancy Schedule Number (if changed) for OCCPC03S, as defined in the Service01 table
- attach the LID to any CCN device, if the chiller has been connected to a CCN Network. This may include other PIC controlled chillers.
- change to a new PSIO or LID module or upgrade software.

Figure 21 illustrates the ATTACH TO NETWORK DEVICE screen. The Local description is always the PSIO module address of the chiller the LID is mounted on. Whenever the controller identification of the PSIO is changed, this change is reflected automatically on the bus and address for the LOCAL DEVICE of the ATTACH TO DEVICE screen. See Fig. 16.

Whenever the ATTACH TO NETWORK DEVICE table is entered, no information can be read from the LID on any device until you attach one of the devices listed on the display. The LID erases information about the module to which it was attached to make room for information on another device. Therefore, a CCN module must be attached when this screen is entered. To attach a device, highlight it using the SELECT softkey and then press the ATTACH softkey. The message "UPLOADING TABLES, PLEASE WAIT" flashes. The LID then uploads the highlighted device or module. If the module address cannot be found, the message "COMMUNICATION FAILURE" appears. The LID then reverts back to the ATTACH TO DEVICE screen. Try another device or check the address of the device that would not attach. The upload process time for each CCN module is different. In general, the uploading process takes 3 to 5 minutes. Before leaving the ATTACH TO NETWORK DEVICE screen, select the LOCAL device. Otherwise, the LID will be unable to display information on the local chiller.

ATTACHING TO OTHER CCN MODULES — If the chiller PSIO has been connected to a CCN Network or other PIC controlled chillers through CCN wiring, the LID can be used to view or change parameters on the other controllers. Other PIC chillers can be viewed and set points changed (if the other unit is in CCN control), if desired, from this particular LID module.

To view the other devices, move to the ATTACH TO NETWORK DEVICE table. Move the highlight bar to any device number. Press SELECT softkey to change the bus number and address of the module to be viewed. Press EXIT softkey to move back to the ATTACH TO NETWORK DEVICE table. If the module number is not valid, the "COMMUNICATION FAILURE" message will show and a new address number should be entered or the wiring checked. If the model is communicating properly, the "UPLOAD IN PROGRESS" message will flash and the new module can now be viewed.

Whenever there is a question regarding which module on the LID is currently being shown, check the device name descriptor on the upper left hand corner of the LID screen. See Fig. 21.

When the CCN device has been viewed, the ATTACH TO NETWORK DEVICE table should now be used to attach to the PIC that is on the chiller. Move to the ATTACH TO NETWORK DEVICE table and press the ATTACH softkey to upload the LOCAL device. The PSIO for the 19XR will now be uploaded.

NOTE: The LID will not automatically re-attach to the PSIO module on the chiller. Press the ATTACH softkey to attach to LOCAL DEVICE and view the chiller PSIO.

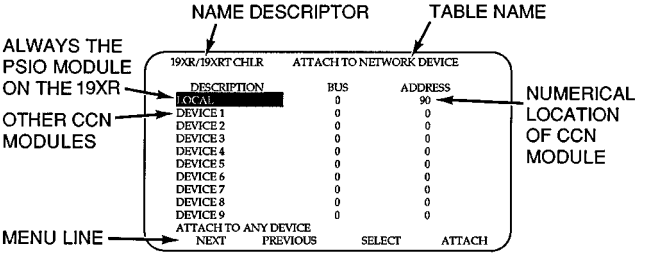

Fig. 21 — Example of Attach to Network Device Screen

Service Operation — An overview of the menu-driven programs available for Service Operation is shown in Fig. 16.

TO LOG ON

1. On the Menu screen, press SERVICE. The keys now correspond to the numerals 1, 2, 3, 4.
2. Press the four digits of your password, one at a time. An asterisk (*) appears as you enter each digit.

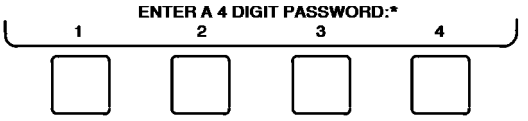

The menu bar (Next-Previous-Select-Exit) is displayed to indicate that you have successfully logged on.

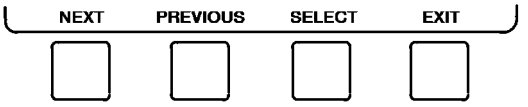

If the password is entered incorrectly, an error message is displayed. If this occurs, return to Step 1 and try logging on again.

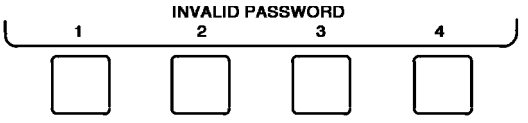

NOTE: The initial factory set password is 1-1-1-1.

TO LOG OFF — Access the Log Out of Device table of the Service menu in order to password-protect the Service menu. The LID will automatically sign off and password-protect itself if a key is not pressed for 15 minutes. The LID default screen is then displayed.

HOLIDAY SCHEDULING (Fig. 22) — The time schedules may be configured for special operation during a holiday period. When modifying a time period, the "H" at the end of the days of the week field signifies that the period is applicable to a holiday. (See Fig. 17.)

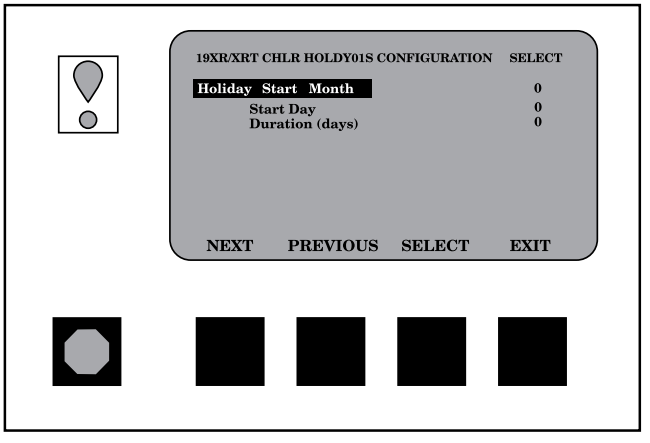

Fig. 22 — Example of Holiday Period Screen

The Broadcast function must be activated for the holidays configured in the Holidef tables to work properly. Access the Brodefs table in the Equipment Configuration table and answer "Yes" to the activated function. However, when the chiller is connected to a CCN Network, only one chiller or CCN device can be configured as the broadcast device. The controller that is configured as the broadcaster is the device responsible for transmitting holiday, time, and daylight-savings dates throughout the network.

To view or change the holiday periods for up to 18 different holidays, perform the following operation:

1. At the Menu screen, press SERVICE to access the Service menu.

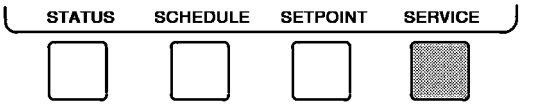

2. If not logged on, follow the instructions for To Log On or To Log Off. Once logged on, press NEXT until Equipment Configuration is highlighted.

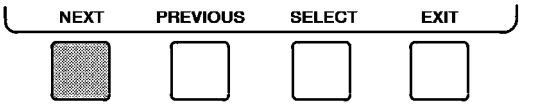

3. Once Equipment Configuration is highlighted, press SELECT to access.

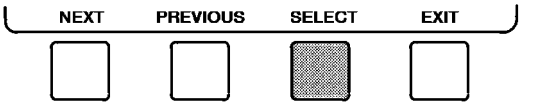

4. Press NEXT until Holidef is highlighted. This is the Holiday Definition table.

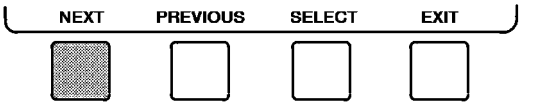

5. Press SELECT to enter the Data Table Select screen. This screen lists 18 holiday tables.

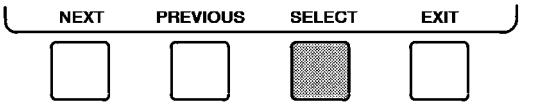

6. Press NEXT to highlight the holiday table that you wish to view or change. Each table is one holiday period, starting on a specific date, and lasting up to 99 days.

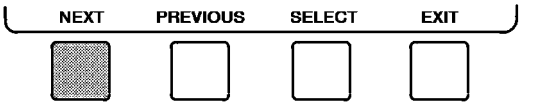

7. Press SELECT to access the holiday table. The Configuration Select table now shows the holiday start month and day, and how many days the holiday period will last.

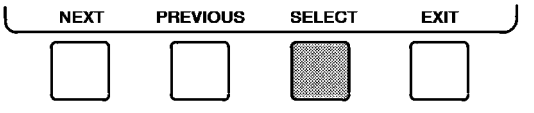

8. Press NEXT or PREVIOUS to highlight the month, day, or duration.

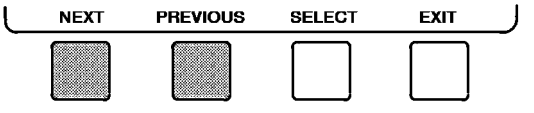

9. Press SELECT to modify the month, day, or duration.

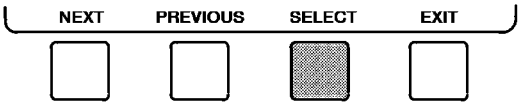

10. Press INCREASE or DECREASE to change the selected value.

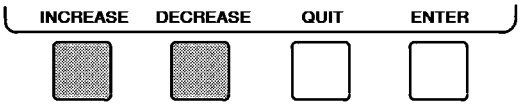

11. Press ENTER to save the changes.

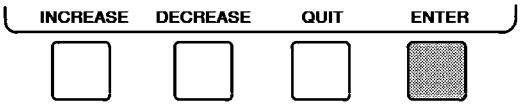

12. Press EXIT to return to the previous menu.

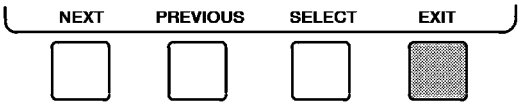

START-UP/SHUTDOWN/RECYCLE SEQUENCE(Fig. 23)

Local Start-Up — Local start-up (or a manual start-up) is initiated by pressing the LOCAL menu softkey which is on the default LID screen. Local start-up can proceed when Time Schedule 01 is in OCCUPIED mode, and after the internal 15-minute start-to-start and the 1-minute stop-to-start inhibit timers have expired.

The chiller start/stop status point on the Status01 table may be overridden to start, regardless of the time schedule, in order to locally start the unit. Also, the remote contacts may be enabled through the LID and closed to initiate a start-up.

Whenever the chiller is in LOCAL control mode, the PIC will wait for Time Schedule 01 to become occupied and the remote contacts to close, if enabled. The PIC will then perform a series of pre-start checks to verify that all pre-start alerts and safeties are within the limits shown in Table 3. The run status line on the LID now reads ''Starting.'' If the checks are successful, the chilled water/brine pump relay will be energized. Five seconds later, the condenser pump relay is energized. Thirty seconds later the PIC monitors the chilled water and condenser water flow switches, and waits until the *WATER FLOW VERIFY TIME* (operator configured, default 5 minutes) to confirm flow. After flow is verified, the chilled water/brine temperature is compared to *CONTROL POINT* plus *DEADBAND*. If the temperature is less than or equal to this value, the PIC will turn off the condenser pump relay and go into a RECYCLE mode. If the water/brine temperature is high enough, the start-up sequence continues on to check the guide vane position. If the guide vanes are more than 6% open, the start-up waits until the PIC closes the vanes. If the vanes are closed, and the oil pump pressure is less than 4 psid (28 kPad), the oil pump relay will then be energized. The PIC then waits until the *OIL PRESS (Pressure) VERIFY TIME* (operator configured, default 15 seconds) for oil pressure to reach 18 psid (124 kPad). After oil pressure is verified, the PIC waits 45 seconds, and then the compressor start relay (1CR) is energized to start the compressor.

Failure to verify any of the requirements up to this point will result in the PIC aborting the start and displaying the applicable pre-start mode of failure on the LID default screen. A pre-start failure does not advance the starts in 12 hours counter. Any failure after the 1CR relay has energized results in a safety shutdown, advances the starts in the 12 hours counter by one, and displays the applicable shutdown status on the LID display.

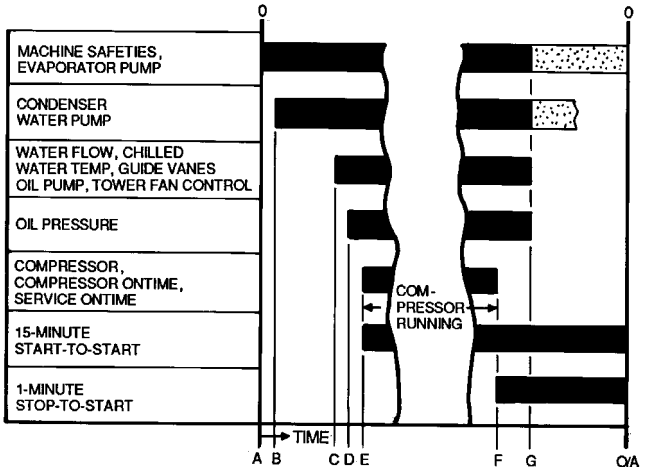

A — START INITIATED — Prestart checks made; evaporator pump started
B — Condenser water pump started (5 seconds after A)
C — Water flows verified (30 seconds to 5 minutes maximum after B). Chilled water temperatures checked against control point. Guide vanes checked for closure. Oil pump started; tower fan control enabled.
D — Oil pressure verified (15 seconds minimum, 300 seconds maximum after C)
E — Compressor motor starts, compressor ontime and service ontime start, 15-minute inhibit timer starts (45 seconds after D)
F — SHUTDOWN INITIATED — Compressor motor stops, compressor ontime and service ontime stops, and 1-minute inhibit timer starts.
G — Oil pump and evaporator pumps deenergized (60 seconds after F). Condenser pump and tower fan control may continue to operate if condenser pressure is high. Evaporator pump may continue if in RECYCLE mode.
O/A — Restart permitted (both inhibit timers expired: minimum of 15 minutes after E; minimum of 1 minute after F).

Fig. 23 — Control Sequence

Shutdown Sequence — Shutdown of the chiller can occur if any of the following events happen:

- the STOP button is pressed for at least one second (the alarm light will blink once to confirm stop command)
- recycle condition is present (see Chilled Water Recycle Mode section)
- time schedule has gone into UNOCCUPIED mode (chiller protective limit has been reached and chiller is in alarm)
- the start/stop status is overridden to stop from the CCN network or the LID

When a stop signal occurs, the shutdown sequence first stops the compressor by deactivating the start relay. A status message of ''SHUTDOWN IN PROGRESS, COMPRESSOR DEENERGIZED'' is displayed. The guide vanes are then brought to the closed position. The oil pump relay and the chilled water/brine pump relay are shut down 60 seconds after the compressor stops. The condenser water pump will be shut down when the *CONDENSER REFRIGERANT TEMP* is less than the *CONDENSER PRESSURE OVERRIDE* minus 5 psi (34 kPa) or is less than or equal to

the *ENTERING CONDENSER WATER TEMP* plus 3° F (2° C). The stop-to-start timer will now begin to count down. If the start-to-start timer is still greater than the value of the start-to-stop timer, then this time is now displayed on the LID.

Certain conditions during shutdown will change this sequence:

- if the *COMPRESSOR MOTOR LOAD* is greater than 10% after shutdown, or the starter contacts remain energized, the oil pump and chilled water pump remain energized and the alarm is displayed
- if the *ENTERING CONDENSER WATER* temperature is greater than 115 F (46 C) at shutdown, the condenser pump will be deenergized after the 1CR compressor start relay
- if the chiller shuts down due to low refrigerant temperature, the chilled water pump will stay running until the *LEAVING CHILLED WATER* is greater than *CONTROL POINT*, plus 5° F (3° C)

Automatic Soft Stop Amps Threshold — The SOFT STOP AMPS THRESHOLD closes the guide vanes of the compressor automatically when a non-recycle, non-alarm stop signal occurs before the compressor motor is deenergized.

If the STOP button is pressed, the guide vanes close to a preset amperage percent or until the guide vane is less than 2% open. The compressor will then shut off.

If the chiller enters an alarm state or if the compressor enters a RECYCLE mode, the compressor will be deenergized immediately.

To activate SOFT STOP AMPS THRESHOLD, view the bottom of Service1 table. Set the SOFT STOP AMPS THRESHOLD value to the percentage amps at which the motor will shut down. The default setting is 100% amps (no Soft Stop).

When the SOFT STOP AMPS THRESHOLD is being applied, a status message ''SHUTDOWN IN PROGRESS, COMPRESSOR UNLOADING'' is shown.

Chilled Water Recycle Mode — The chiller may cycle off and wait until the load increases to restart again when the compressor is running in a lightly loaded condition. This cycling of the chiller is normal and is known as recycle. A recycle shutdown is initiated when any of the following conditions are true:

- when in LCW control, the difference between the *LEAVING CHILLED WATER* temperature and *ENTERING CHILLED WATER* temperature is less than the *RECYCLE SHUTDOWN DELTA T* (found in the SERVICE 1 table) and the *LEAVING CHILLED WATER TEMP* is below the *CONTROL POINT*, and the *CONTROL POINT* has not increased in the last 5 minutes.
- when the *ECW CONTROL OPTION* is enabled, the difference between the *ENTERING CHILLED WATER* temperature and the *LEAVING CHILLED WATER* temperature is less than the *RECYCLE SHUTDOWN DELTA T* (found in the SERVICE 1 table) and the *ENTERING CHILLED WATER TEMPERATURE* is below the *CONTROL POINT*, and the *CONTROL POINT* has not increased in the last 5 minutes.
- when the *LEAVING CHILLED WATER* temperature is within 3° F (2° C) of the *BRINE REFRIG TRIPPOINT*

When the chiller is in RECYCLE mode, the chilled water pump relay remains energized so that the chilled water temperature can be monitored for increasing load. The recycle control uses *RECYCLE RESTART DELTA T* to check when the compressor should be restarted. This is an operator-configured function which defaults to 5° F (3° C). This value is viewed/modified on the Service1 table. The compressor will restart when:

- in LCW CONTROL the *LEAVING CHILLED WATER* temperature is greater than the *CONTROL POINT* plus the *RECYCLE RESTART DELTA T;* or
- in ECW CONTROL, the *ENTERING CHILLED WATER* temperature is greater than the *CONTROL POINT* plus the *RECYCLE RESTART DELTA T*

Once these conditions are met, the compressor will initiate a start-up, with a normal start-up sequence.

An alert condition may be generated if 5 or more RECYCLE STARTUPs occur in less than 4 hours. This excessive recycling can reduce chiller life. Compressor recycling due to extremely low loads should be reduced. To reduce compressor recycling, use the time schedule to shut the chiller down during low load operation or increase the chiller load by running the fan systems. If the hot gas bypass is installed, adjust the values to ensure that hot gas is energized during light load conditions. Increase the *RECYCLE RESTART DELTA T* on the Service1 table to lengthen the time between restarts.

The chiller should not be operated below design minimum load without a hot gas bypass installed on the chiller.

Safety Shutdown — A safety shutdown is identical to a manual shutdown with the exception that the LID will display the reason for the shutdown, the alarm light will blink continuously, and the spare alarm contacts will be energized. A safety shutdown requires that the RESET softkey be pressed in order to clear the alarm. If the alarm condition is still present, the alarm light will continue to blink. Once the alarm is cleared, the operator must press the CCN or LOCAL softkeys to restart the chiller.

⚠ CAUTION

Do not reset starter loads or any other starter safety for 30 seconds after the compressor has stopped. Voltage output to the compressor start signal is maintained for 10 seconds to determine starter fault.

BEFORE INITIAL START-UP

Job Data Required

- list of applicable design temperatures and pressures (product data submittal)
- chiller certified prints
- starting equipment details and wiring diagrams
- diagrams and instructions for special controls or options
- 19XR Installation Instructions
- pumpout unit instructions

Equipment Required

- mechanic's tools (refrigeration)
- digital volt-ohmmeter (DVM)
- clamp-on ammeter
- electronic leak detector
- absolute pressure manometer or wet-bulb vacuum indicator (Fig. 24)
- 500-v insulation tester (megohmmeter) for compressor motors with nameplate voltage of 600 v or less, or a 5000-v insulation tester for compressor motor rated above 600 v

Using the Optional Storage Tank and Pumpout System — Refer to Pumpout and Refrigerant Transfer Procedures section, page 51 for: pumpout system preparation, refrigerant transfer, and chiller evacuation.

Remove Shipping Packaging — Remove any packaging material from the control center, power panel, guide vane actuator, motor cooling and oil reclaim solenoids, motor and bearing temperature sensor covers, and the factory-mounted starter.

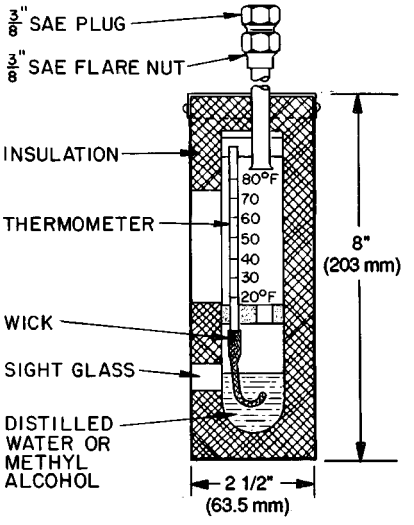

Fig. 24 — Typical Wet-Bulb Type Vacuum Indicator

Open Oil Circuit Valves — Check that the oil filter isolation valves (Fig. 4) are open by removing the valve cap and checking the valve stem.

Tighten All Gasketed Joints and Guide Vane Shaft Packing — Gaskets and packing normally relax by the time the chiller arrives at the jobsite. Tighten all gasketed joints and the guide vane shaft packing to ensure a leak tight chiller.

Check Chiller Tightness — Figure 25 outlines the proper sequence and procedures for leak testing.

19XR chillers are shipped with the refrigerant contained in the condenser shell and the oil charge shipped in the compressor. The cooler will have a 15 psig (103 kPa) refrigerant charge. Units may be ordered with the refrigerant shipped separately, along with a 15 psig (103 kPa) nitrogen-holding charge in each vessel. To determine if there are any leaks, the chiller should be charged with refrigerant. Use an electronic leak detector to check all flanges and solder joints after the chiller is pressurized. If any leaks are detected, follow the leak test procedure.

If the chiller is spring isolated, keep all springs blocked in both directions in order to prevent possible piping stress and damage during the transfer of refrigerant from vessel to vessel during the leak test process, or any time refrigerant is transferred. Adjust the springs when the refrigerant is in operating condition, and when the water circuits are full.

Refrigerant Tracer — Carrier recommends the use of an environmentally acceptable refrigerant tracer for leak testing with an electronic detector or halide torch.

Ultrasonic leak detectors also can be used if the chiller is under pressure.

⚠ WARNING

Do not use air or oxygen as a means of pressurizing the chiller. Mixtures of HFC-134a and air can undergo combustion.

Leak Test Chiller — Due to regulations regarding refrigerant emissions and the difficulties associated with separating contaminants from refrigerant, Carrier recommends the following leak test procedures. See Fig. 25 for an outline of the leak test procedures. Refer to Fig. 26 and 27 during pumpout procedures and Tables 5A and 5B for refrigerant pressure/temperature values.

1. If the pressure readings are normal for chiller condition:
   a. Evacuate the holding charge from the vessels, if present.
   b. Raise the chiller pressure, if necessary, by adding refrigerant until pressure is at equivalent saturated pressure for the surrounding temperature. Follow the pumpout procedures in the Transfer Refrigerant from Pumpout Storage Tank to Chiller section, Steps 1a - e, page 53.

   ⚠ WARNING

   Never charge liquid refrigerant into the chiller if the pressure in the chiller is less than 35 psig (241 kPa) for HFC-134a. Charge as a gas only, with the cooler and condenser pumps running, until this pressure is reached, using PUMPDOWN LOCKOUT and TERMINATE LOCKOUT mode on the PIC. Flashing of liquid refrigerant at low pressures can cause tube freezeup and considerable damage.

   c. Leak test chiller as outlined in Steps 3 - 9.
2. If the pressure readings are abnormal for chiller condition:
   a. Prepare to leak test chillers shipped with refrigerant (Step 2h).
   b. Check for large leaks by connecting a nitrogen bottle and raising the pressure to 30 psig (207 kPa). Soap test all joints. If the test pressure holds for 30 minutes, prepare the test for small leaks (Steps 2g - h).
   c. Plainly mark any leaks which are found.
   d. Release the pressure in the system.
   e. Repair all leaks.
   f. Retest the joints that were repaired.
   g. After successfully completing the test for large leaks, remove as much nitrogen, air, and moisture as possible, given the fact that small leaks may be present in the system. This can be accomplished by following the dehydration procedure, outlined in the Chiller Dehydration section, page 41.
   h. Slowly raise the system pressure to a maximum of 160 psig (1103 kPa) but no less than 35 psig (241 kPa) for HFC-134a by adding refrigerant. Proceed with the test for small leaks (Steps 3-9).
3. Check the chiller carefully with an electronic leak detector, halide torch, or soap bubble solution.
4. Leak Determination — If an electronic leak detector indicates a leak, use a soap bubble solution, if possible, to confirm. Total all leak rates for the entire chiller. Leakage at rates greater than 1 lb/year (0.45 kg/year) for the entire chiller must be repaired. Note total chiller leak rate on the start-up report.

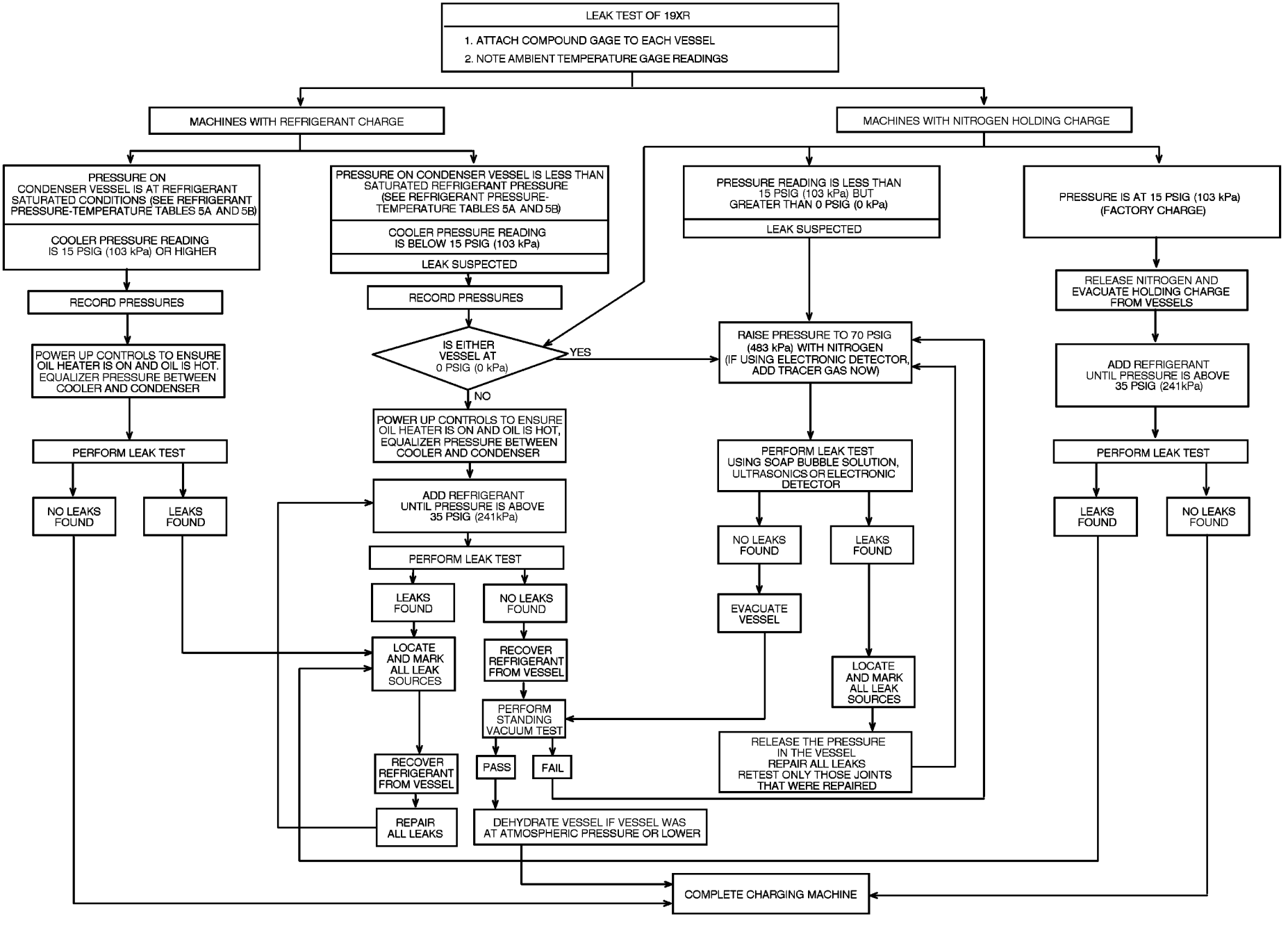

Fig. 25 — 19XR Leak Test Procedures

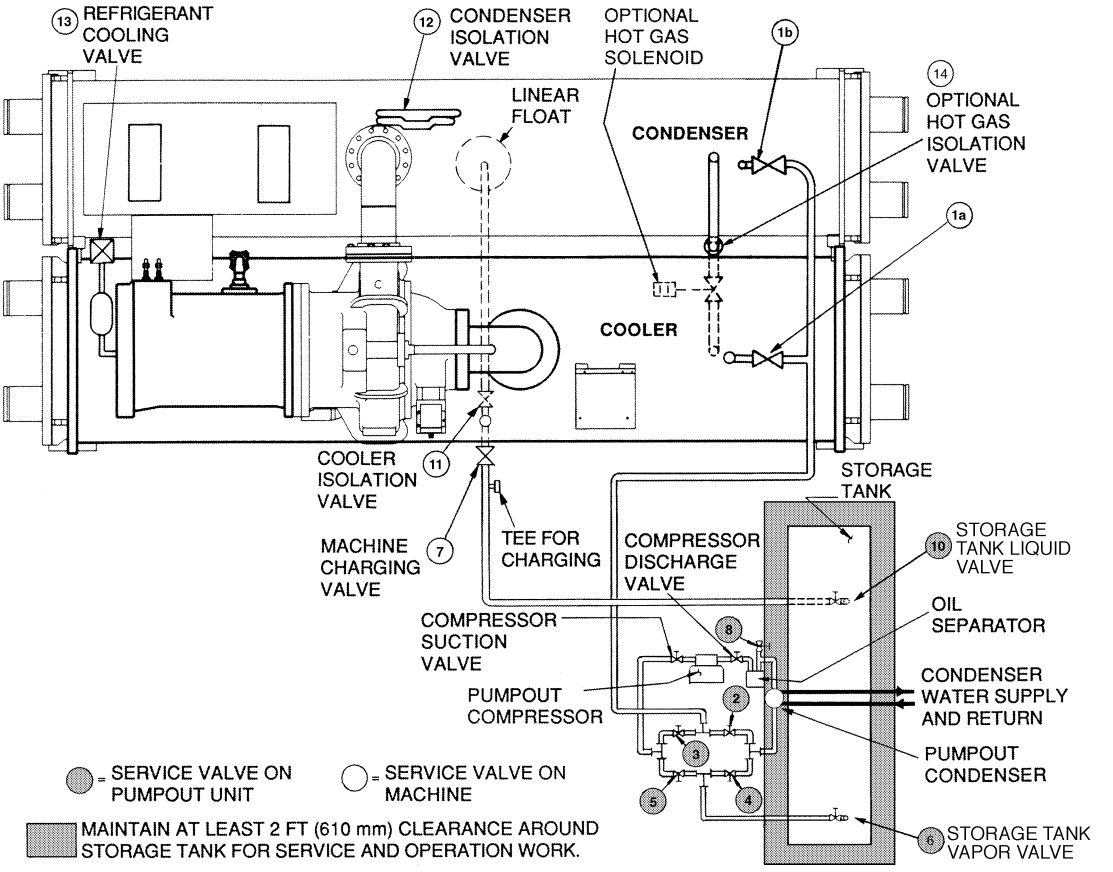

Fig. 26 — Typical Optional Pumpout System Piping Schematic with Storage Tank

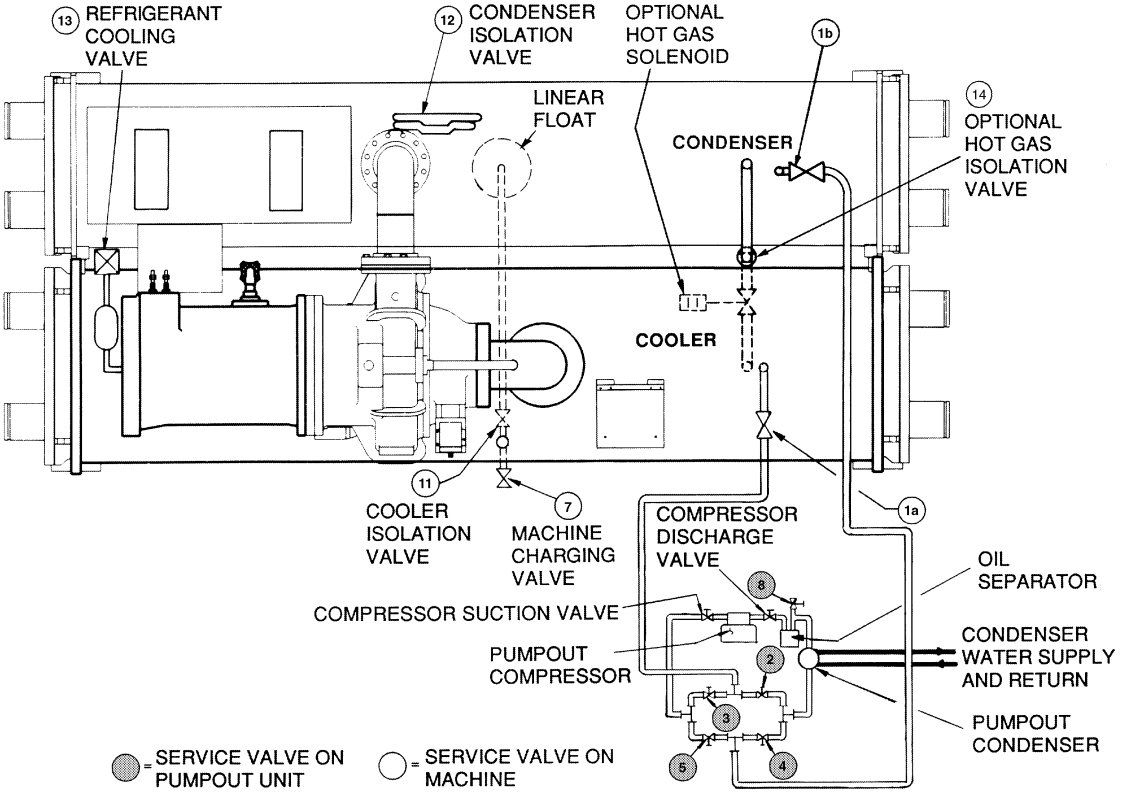

Fig. 27 — Typical Optional Pumpout System Piping Schematic without Storage Tank

5. If no leak is found during initial start-up procedures, complete the transfer of refrigerant gas from the pumpout storage tank to the chiller (see Pumpout and Refrigerant Transfer Procedures, Chillers with Pumpout Storage Tanks section, Step 1e, page 53). Retest.
6. If no leak is found after a retest:
   a. Transfer the refrigerant to the pumpout storage tank and perform a standing vacuum test as outlined in the Standing Vacuum Test section, this page.
   b. If the chiller fails this test, check for large leaks (Step 2b).
   c. Dehydrate the chiller if it passes the standing vacuum test. Follow the procedure in the Chiller Dehydration section. Charge chiller with refrigerant (see Pumpout and Refrigerant Transfer Procedures, Chillers with Pumpout Storage Tanks section, Steps 1a-e).
7. If a leak is found, pump the refrigerant back into the pumpout storage tank, or if isolation valves are present, pump into the non-leaking vessel (see Pumpout and Refrigerant Transfer procedures section).
8. Transfer the refrigerant until chiller pressure is at 18 in. Hg (40 kPa absolute).
9. Repair the leak and repeat the procedure, beginning from Step 2h to ensure a leaktight repair. (If chiller is opened to the atmosphere for an extended period, evacuate it before repeating leak test.)

Standing Vacuum Test — When performing the standing vacuum test or chiller dehydration, use a manometer or a wet bulb indicator. Dial gages cannot indicate the small amount of acceptable leakage during a short period of time.

1. Attach an absolute pressure manometer or wet bulb indicator to the chiller.
2. Evacuate the vessel (see Pumpout and Refrigerant Transfer Procedures section, page 51) to at least 18 in. Hg vac, ref 30-in. bar (41 kPa), using a vacuum pump or the pumpout unit.
3. Valve off the pump to hold the vacuum and record the manometer or indicator reading.
4. a. If the leakage rate is less than 0.05 in. Hg (.17 kPa) in 24 hours, the chiller is sufficiently tight.
   b. If the leakage rate exceeds 0.05 in. Hg (.17 kPa) in 24 hours, repressurize the vessel and test for leaks. If refrigerant is available in the other vessel, pressurize by following Steps 2-10 of Return Refrigerant To Normal Operating Conditions section, page 54. If not, use nitrogen and a refrigerant tracer. Raise the vessel pressure in increments until the leak is detected. If refrigerant is used, the maximum gas pressure is approximately 70 psig (483 kPa) for HFC-134a at normal ambient temperature. If nitrogen is used, limit the leak test pressure to 230 psig (1585 kPa) maximum.
5. Repair leak, retest, and proceed with dehydration.

Chiller Dehydration — Dehydration is recommended if the chiller has been open for a considerable period of time, if the chiller is known to contain moisture, or if there has been a complete loss of chiller holding charge or refrigerant pressure.

⚠ WARNING

Do not start or megohm-test the compressor motor or oil pump motor, even for a rotation check, if the chiller is under dehydration vacuum. Insulation breakdown and severe damage may result.

Dehydration is readily accomplished at room temperatures. Use of a cold trap (Fig. 28) may substantially reduce the time required to complete the dehydration. The higher the room temperature, the faster dehydration takes place. At low room temperatures, a very deep vacuum is required for boiling off any moisture. If low ambient temperatures are involved, contact a qualified service representative for the dehydration techniques required.

Perform dehydration as follows:

1. Connect a high capacity vacuum pump (5 cfm[.002 m^3/s] or larger is recommended) to the refrigerant charging valve (Fig. 2). Tubing from the pump to the chiller should be as short and as large a diameter as possible to provide least resistance to gas flow.
2. Use an absolute pressure manometer or a wet bulb vacuum indicator to measure the vacuum. Open the shutoff valve to the vacuum indicator only when taking a reading. Leave the valve open for 3 minutes to allow the indicator vacuum to equalize with the chiller vacuum.
3. Open all isolation valves (if present), if the entire chiller is to be dehydrated.
4. With the chiller ambient temperature at 60 F (15.6 C) or higher, operate the vacuum pump until the manometer reads 29.8 in. Hg vac, ref 30 in. bar. (0.1 psia)(–100.61 kPa) or a vacuum indicator reads 35 F (1.7 C). Operate the pump an additional 2 hours.

   Do not apply greater vacuum than 29.82 in. Hg vac (757.4 mm Hg) or go below 33 F (.56 C) on the wet bulb vacuum indicator. At this temperature/pressure, isolated pockets of moisture can turn into ice. The slow rate of evaporation (sublimination) of ice at these low temperatures/pressures greatly increases dehydration time.
5. Valve off the vacuum pump, stop the pump, and record the instrument reading.
6. After a 2-hour wait, take another instrument reading. If the reading has not changed, dehydration is complete. If the reading indicates vacuum loss, repeat Steps 4 and 5.
7. If the reading continues to change after several attempts, perform a leak test up to the maximum 160 psig (1103 kPa) pressure. Locate and repair the leak, and repeat dehydration.

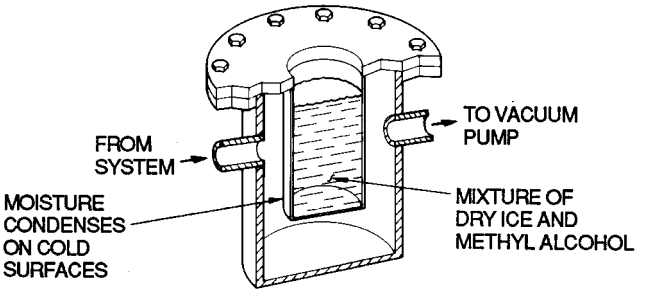

Fig. 28 — Dehydration Cold Trap

Table 5A — HFC-134a Pressure Temperature (F)

TEMPERATURE, F	PRESSURE (psig)
0	6.50
2	7.52
4	8.60
6	9.66
8	10.79
10	11.96
12	13.17
14	14.42
16	15.72
18	17.06
20	18.45
22	19.88
24	21.37
26	22.90
28	24.48
30	26.11
32	27.80
34	29.53
36	31.32
38	33.17
40	35.08
42	37.04
44	39.06
46	41.14
48	43.28
50	45.48
52	47.74
54	50.07
56	52.47
58	54.93
60	57.46
62	60.06
64	62.73
66	65.47
68	68.29
70	71.18
72	74.14
74	77.18
76	80.30
78	83.49
80	86.17
82	90.13
84	93.57
86	97.09
88	100.70
90	104.40
92	108.18
94	112.06
96	116.02
98	120.08
100	124.23
102	128.47
104	132.81
106	137.25
108	141.79
110	146.43
112	151.17
114	156.01
116	160.96
118	166.01
120	171.17
122	176.45
124	181.83
126	187.32
128	192.93
130	198.66
132	204.50
134	210.47
136	216.55
138	222.76
140	229.09

Table 5B — HFC-134a Pressure Temperature (C)

TEMPERATURE, C	PRESSURE GAGE (kPa)
-18.0	44.8
-16.7	51.9
-15.6	59.3
-14.4	66.6
-13.3	74.4
-12.2	82.5
-11.1	90.8
-10.0	99.4
-8.9	108.0
-7.8	118.0
-6.7	127.0
-5.6	137.0
-4.4	147.0
-3.3	158.0
-2.2	169.0
-1.1	180.0
0.0	192.0
1.1	204.0
2.2	216.0
3.3	229.0
4.4	242.0
5.0	248.0
5.6	255.0
6.1	261.0
6.7	269.0
7.2	276.0
7.8	284.0
8.3	290.0
8.9	298.0
9.4	305.0
10.0	314.0
11.1	329.0
12.2	345.0
13.3	362.0
14.4	379.0
15.6	396.0
16.7	414.0
17.8	433.0
18.9	451.0
20.0	471.0
21.1	491.0
22.2	511.0
23.3	532.0
24.4	554.0
25.6	576.0
26.7	598.0
27.8	621.0
28.9	645.0
30.0	669.0
31.1	694.0
32.2	720.0
33.3	746.0
34.4	773.0
35.6	800.0
36.7	828.0
37.8	857.0
38.9	886.0
40.0	916.0
41.1	946.0
42.2	978.0
43.3	1010.0
44.4	1042.0
45.6	1076.0
46.7	1110.0
47.8	1145.0
48.9	1180.0
50.0	1217.0
51.1	1254.0
52.2	1292.0
53.3	1330.0
54.4	1370.0
55.6	1410.0
56.7	1451.0
57.8	1493.0
58.9	1536.0
60.0	1580.0

Inspect Water Piping — Refer to piping diagrams provided in the certified drawings, and the piping instructions in the 19XR Installation Instructions manual. Inspect the piping to the cooler and condenser. Be sure that flow directions are correct and that all piping specifications have been met.

Piping systems must be properly vented, with no stress on waterbox nozzles and covers. Water flows through the cooler and condenser must meet job requirements. Measure the pressure drop across cooler and across condenser.

⚠ CAUTION

Water must be within design limits, clean, and treated to ensure proper chiller performance and reduce the potential of tubing damage due to corrosion, scaling, or erosion. Carrier assumes no responsibility for chiller damage resulting from untreated or improperly treated water.

Check Optional Pumpout Compressor Water Piping — If the optional pumpout storage tank and/or pumpout system are installed, check to ensure the pumpout condenser water has been piped in. Check for field-supplied shutoff valves and controls as specified in the job data. Check for refrigerant leaks on field-installed piping. See Fig. 26 and 27.

Check Relief Devices — Be sure that relief devices have been piped to the outdoors in compliance with the latest edition of ANSI/ASHRAE Standard 15 and applicable local safety codes. Piping connections must allow for access to the valve mechanism for periodic inspection and leak testing.

19XR relief valves are set to relieve at the 225 psig (1551 kPa) chiller design pressure.

Inspect Wiring

⚠ WARNING

Do not check voltage supply without proper equipment and precautions. Serious injury may result. Follow power company recommendations.

⚠ CAUTION

Do not apply any kind of test voltage, even for a rotation check, if the chiller is under a dehydration vacuum. Insulation breakdown and serious damage may result.

1. Examine wiring for conformance to job wiring diagrams and to all applicable electrical codes.
2. On low-voltage compressors (600 v or less) connect voltmeter across the power wires to the compressor starter and measure the voltage. Compare this reading with the voltage rating on the compressor and starter nameplates.
3. Compare the ampere rating on the starter nameplate with the compressor nameplate. The overload trip amps must be 108% to 120% of the rated load amps.
4. The starter for a centrifugal compressor motor must contain the components and terminals required for PIC refrigeration control. Check certified drawings.
5. Check the voltage to the following components and compare to the nameplate values: oil pump contact, pumpout compressor starter, and power panel.
6. Be sure that fused disconnects or circuit breakers have been supplied for the oil pump, power panel, and pumpout unit.
7. Check that all electrical equipment and controls are properly grounded in accordance with job drawings, certified drawings, and all applicable electrical codes.
8. Make sure that the customer's contractor has verified proper operation of the pumps, cooling tower fans, and associated auxiliary equipment. This includes ensuring that motors are properly lubricated and have proper electrical supply and proper rotation.
9. For field-installed starters only, test the chiller compressor motor and its power lead insulation resistance with a 500-v insulation tester such as a megohmmeter. (Use a 5000-v tester for motors rated over 600 v.) Factory-mounted starters do not require a megohm test.
   a. Open the starter main disconnect switch and follow lockout/tagout rules.

   ⚠ CAUTION

   If the motor starter is a solid-state starter, the motor leads must be disconnected from the starter before an insulation test is performed. The voltage generated from the tester can damage the starter solid-state components.

   b. With the tester connected to the motor leads, take 10-second and 60-second megohm readings as follows:

      6-Lead Motor — Tie all 6 leads together and test between the lead group and ground. Next tie leads in pairs, 1 and 4, 2 and 5, and 3 and 6. Test between each pair while grounding the third pair.

      3-Lead Motor — Tie terminals 1, 2, and 3 together and test between the group and ground.

   c. Divide the 60-second resistance reading by the 10-second reading. The ratio, or polarization index, must be one or higher. Both the 10- and 60-second readings must be at least 50 megohms.

      If the readings on a field-installed starter are unsatisfactory, repeat the test at the motor with the power leads disconnected. Satisfactory readings in this second test indicate the fault is in the power leads.

      NOTE: Unit-mounted starters do not have to be megohm tested.
10. Tighten up all wiring connections to the plugs on the SMM, 8-input, and PSIO modules.
11. Ensure that the voltage selector switch inside the power panel is switched to the incoming voltage rating.
12. On chillers with free-standing starters, inspect the power panel to ensure that the contractor has fed the wires into the bottom of the panel. Wiring into the top of the panel can cause debris to fall into the contactors. Clean and inspect the contactors if this has occurred.

Carrier Comfort Network Interface — The Carrier Comfort Network (CCN) communication bus wiring is supplied and installed by the electrical contractor. It consists of shielded, 3-conductor cable with drain wire.

The system elements are connected to the communication bus in a daisy chain arrangement. The positive pin of each system element communication connector must be wired to the positive pins of the system element on either side of it; the negative pins must be wired to the negative pins; the signal ground pins must be wired to signal ground pins.

To attach the CCN communication bus wiring, refer to the certified drawings and wiring diagrams. The wire is inserted into the CCN communications plug (COMM1) on the PSIO module. This plug also is referred to as J5.

NOTE: Conductors and drain wire must be 20 AWG (American Wire Gage) minimum stranded, tinned copper. Individual conductors must be insulated with PVC, PVC/nylon, vinyl, Teflon, or polyethylene. An aluminum/polyester 100% foil shield and an outer jacket of PVC, PVC/nylon, chrome vinyl or Teflon with a minimum operating temperature range of –20 C to 60 C is required. See table below for cables that meet the requirements.

MANUFACTURER	CABLE NO.
Alpha	2413 or 5463
American	A22503
Belden	8772
Columbia	02525

When connecting the CCN communication bus to a system element, a color code system for the entire network is recommended to simplify installation and checkout. The following color code is recommended:

SIGNAL TYPE	CCN BUS CONDUCTOR INSULATION COLOR	PSIO MODULE COMM 1 PLUG (J5) PIN NO.
+	RED	1
Ground	WHITE	2
–	BLACK	3

Check Starter

⚠ CAUTION

BE AWARE that certain automatic start arrangements *can engage the starter*. Open the disconnect *ahead* of the starter in addition to shutting off the chiller or pump.

Use the instruction and service manual supplied by the starter manufacturer to verify that the starter has been installed correctly, to set up and calibrate the starter, and for complete troubleshooting information.

⚠ CAUTION

The main disconnect on the starter front panel may not deenergize all internal circuits. Open all internal and remote disconnects before servicing the starter.

Whenever a starter safety trip device activates, wait at least 30 seconds before resetting the safety. The microprocessor maintains its output to the 1CR relay for 10 seconds to determine the fault mode of failure.

MECHANICAL STARTER

1. Check all field wiring connections for tightness, clearance from moving parts, and correct connection.
2. Check the contactor(s) to be sure they move freely. Check the mechanical interlock between contactors to ensure that 1S and 2M contactors cannot be closed at the same time. Check all other electro-mechanical devices, e.g., relays, timers, for free movement. If the devices do not move freely, contact the starter manufacturer for replacement components.
3. Some dashpot-type magnetic overload relays must be filled with oil on the job site. If the starter is equipped with devices of this type, remove the fluid cups from these magnetic overload relays. Add dashpot oil to cups per instructions supplied with the starter. The oil is usually shipped in a small container attached to the starter frame near the relays. Use only dashpot oil supplied with the starter. Do not substitute.

   Factory-filled dashpot overload relays need no oil at start-up and solid-state overload relays do not have oil.
4. Reapply starter control power *(not main chiller power)* to check electrical functions. When using a reduced-voltage starter (such as a wye-delta type) check the transition timer for proper setting. The factory setting is 30 seconds (± 5 seconds), timed closing. The timer is adjustable in a range between 0 and 60 seconds and settings other than the nominal 30 seconds may be chosen as needed (typically 20 to 30 seconds are used).

   When the timer has been set, check that the starter, (with relay 1CR closed), goes through a complete and proper start cycle.

BENSHAW, INC. SOLID-STATE STARTER

⚠ WARNING

This equipment is at line voltage when AC power is connected. Pressing the STOP button does not remove voltage. Use caution when adjusting the potentiometers on the equipment.

1. Check that all wiring connections are properly terminated to the starter.
2. Verify that the ground wire to the starter is installed properly and is of sufficient size.
3. Verify that the motors are properly grounded to the starter.
4. Check that all of the relays are properly seated in their sockets.
5. Verify that the proper ac input voltage is brought into the starter per the certified drawings.
6. Apply power to the starter.

Oil Charge — The 19XR compressor holds approximately 8 gal. (30 L) of oil for Frame 3 compressors; 10 gal (37.8 L) of oil for Frame 4 compressors. The chiller will be shipped with oil in the compressor. When the sump is full, the oil level should be no higher than the middle of the upper sight glass, and minimum level is the bottom of the lower sight glass (Fig. 2). If oil is added, it must meet Carrier's specification for centrifugal compressor usage as described in the Oil Specification section. Charge the oil through the oil charging valve, located near the bottom of the transmission housing (Fig. 2). The oil must be pumped from the oil container through the charging valve due to higher refrigerant pressure. The pumping device must be able to lift from 0 to 200 psig (0 to 1380 kPa) or above unit pressure. Oil should only be charged or removed when the chiller is shut down.

Power Up the Controls and Check the Oil Heater — Ensure that an oil level is visible in the compressor before energizing controls. A circuit breaker in the starter energizes the oil heater and the control circuit. When first powered, the LID should display the default screen within a short period of time.

The oil heater is energized by powering the control circuit. This should be done several hours before start-up to minimize oil-refrigerant migration. The oil heater is controlled by the PIC and is powered through a contactor in the power panel. Starters contain a separate circuit breaker to power the heater and the control circuit. This set up allows the heater to energize when the main motor circuit breaker is off for service work or extended shutdowns. The oil heater relay status can be viewed on the Status02 table on the LID. Oil sump temperature can be viewed on the LID default screen.

SOFTWARE VERSION — The software version will always be labeled on the PSIO module and on the back side of the LID module. The software version will also appear on both the Controller ID and LID ID display screens.

Set Up Chiller Control Configuration

⚠ WARNING

Do not operate the chiller before the control configurations have been checked and a Control Test has been satisfactorily completed. Protection by safety controls cannot be assumed until all control configurations have been confirmed.

As you configure the 19XR unit, write down all configuration settings. A log, such as the one shown on pages CL-1 to CL-12, provides a convenient list for configuration values.

Input the Design Set Points — Access the LID set point screen and view/modify the base demand limit set point, and *either* the LCW set point *or* the ECW set point. The PIC can control a set point to either the leaving or entering chilled water. This control method is set in the Equipment Configuration table, Config table.

Input the Local Occupied Schedule (OCCPC01S) — Access the schedule OCCPC01S screen on the LID and set up the occupied time schedule according to the customer's requirements. If no schedule is available, the default is factory set for 24 hours occupied, 7 days per week including holidays.

For more information about how to set up a time schedule, see the Controls section, page 10.

The CCN Occupied Schedule (OCCPC03-99S) should be configured if a CCN system is being installed or if a secondary time schedule is needed.

NOTE: The default CCN Occupied Schedule is OCCPC03S.

Input Service Configurations — The following configurations require the LID screen to be in the Service portion of the menu.

- password
- input time and date
- LID configuration
- controller identification
- service parameters
- equipment configuration
- automated control test

PASSWORD — When accessing the Service tables, a password must be entered. All LIDs are initially set for a password of 1-1-1-1. This password may be changed in the LID configuration screen, if desired.

INPUT TIME AND DATE — Access the Time and Date table on the Service menu. Input the present time of day, date, and day of the week. ''Holiday Today'' should only be configured to ''Yes'' if the present day is a holiday.

CHANGE LID CONFIGURATION IF NECESSARY — The LID Configuration screen is used to view or modify the LID CCN address, change to English or SI units, and to change the password. If there is more than one chiller at the jobsite, change the LID address on each chiller so that each chiller has its own address. Note and record the new address. Change the screen to SI units as required, and change the password if desired.

MODIFY CONTROLLER IDENTIFICATION IF NECESSARY — The controller identification screen is used to change the PSIO module address. Change this address for each chiller if there is more than one chiller at the jobsite. Write the new address on the PSIO module for future reference.

Change the LID address if there is more than one chiller on the jobsite. Access the LID configuration screen to view or modify this address.

INPUT EQUIPMENT SERVICE PARAMETERS IF NECESSARY — The Equipment Service table has three service tables: Service1, Service2, and Service3.

Configure SERVICE1 Table — Access Service1 table to modify/view the following to jobsite parameters:

Chilled Medium	Water or Brine?
Brine Refrigerant Trippoint	Usually 3° F (1.7° C) below design refrigerant temperature
Surge Limiting or Hot Gas Bypass Option	Is HGBP installed?
Minimum Load Points (T1/P1)	Per job data — See Modify Load Points section
Maximum Load Points (T2/P2)	Per job data — See Modify Load Points section
Motor Rated Load Amps	Per job data
Motor Rated Line Voltage	Per job data
Motor Rated Line kW	Per job data (if kW meter installed)
Line Frequency	50 or 60 Hz
Compressor Starter Type	Reduced voltage or full?

NOTE: Other values are left at the default values. These may be changed by the operator as required. Service2 and Service3 tables can be modified by the owner/operator as required.

Modify Minimum and Maximum Load Points (ΔT1/P1; Δ T2/P2) If Necessary — These pairs of chiller load points, located on the Service1 table, determine when to limit guide vane travel or to open the hot gas bypass valve when surge prevention is needed. These points should be set based on individual chiller operating conditions.

If, after configuring a value for these points, surge prevention is operating too soon or too late for conditions, these parameters should be changed by the operator.

Example of configuration: Chiller operating parameters

Refrigerant used: HCFC-134a

Estimated Minimum Load Conditions:

44 F (6.7 C) LCW
45.5 F (7.5 C) ECW
43 F (6.1 C) Suction Temperature
70 F (21.1 C) Condensing Temperature

Estimated Maximum Load Conditions:

44 F (6.7 C) LCW
54 F (12.2 C) ECW
42 F (5.6 C) Suction Temperature
98 F (36.7 C) Condensing Temperature

Calculate Maximum Load — To calculate maximum load points, use design load condition data. If the chiller full load cooler temperature difference is more than 15 F (8.3 C),

estimate the refrigerant suction and condensing temperatures at this difference. Use the proper saturated pressure and temperature for the particular refrigerant used.

Suction Temperature:
42 F (5.6 C) = 37 psig (255 kPa) saturated refrigerant pressure (HCFC-134a)

Condensing Temperature:
98 F (36.7 C) = 120 psig (1827 kPa) saturated refrigerant pressure (HCFC-134a)

Maximum Load ΔT2:
54 – 44 = 10° F (12.2 – 6.7 = 5.5° C)

Maximum Load ΔP2:
120 – 37 = 83 psid (827 – 255 = 572 kPad)

To avoid unnecessary surge prevention, add about 10 psid (70 kPad) to ΔP2 from these conditions:
ΔT2 = 10° F (5.5° C)
ΔP2 = 93 psid (642 kPad)

Calculate Minimum Load — To calculate minimum load conditions, estimate the temperature difference that the cooler will have at 10% load, then estimate what the suction and condensing temperatures will be at this point. Use the proper saturated pressure and temperature for the particular refrigerant used.

Suction Temperature:
43 F (6.1 C) = 38 psig (262 kPa) saturated refrigerant pressure (HCFC-134a)

Condensing Temperature:
70 F (21.1 C) = 71 psig (490 kPa) saturated refrigerant pressure (HCFC-134a)

Minimum Load ΔT1 (at 20% Load): 2 F (1.1 C)

Minimum Load ΔP1:
71 – 38 = 33 psid (490 – 262 = 228 kPad)

Again, to avoid unnecessary surge prevention, add 20 psid (140 kPad) at ΔP1 from these conditions:
ΔT1 = 2 F (1.1 C)
ΔP1 = 53 psid (368 kPad)

If surge prevention occurs too soon or too late:

LOAD	SURGE PREVENTION OCCURS TOO SOON	SURGE PREVENTION OCCURS TOO LATE
At low loads (<50%)	Increase P1 by 10 psid (70 kPad)	Decrease P1 by 10 psid (70 kPad)
At high loads (>50%)	Increase P2 by 10 psid (70 kPad)	Decrease P2 by 10 psid (70 kPad)

Amp Correction Factors — The amp correction factor should be kept at its default value unless a Carrier technical representative advises a change. To modify the amp correction factor, enter the appropriate amp correction factor in the Service1 table of Equipment Service.

MODIFY EQUIPMENT CONFIGURATION IF NECESSARY — The Equipment Configuration table has tables to select and view or modify. Carrier's certified drawings will have the configuration values required for the jobsite. Modify these tables only if requested.

Config Table Modifications — Change the values in this table per job data. See certified drawings for values. Modifications include:

- chilled water reset
- entering chilled water control (Enable/Disable)
- 4-20 mA demand limit
- auto restart option (Enable/Disable)
- remote contact option (Enable/Disable)

Owner-Modified CCN Tables— The following tables are described for reference only.

Occdef Table Modifications — The Occdef tables contain the Local and CCN time schedules, which can be modified here or in the Schedule screen as described previously.

Holidef Table Modifications — The Holidef tables configure the days of the year that holidays are in effect. See the holiday paragraphs in the Controls section for more details.

Brodefs Table Modifications — The Brodefs screen defines the outside-air temperature sensor and humidity sensor if one is to be installed. It will define the start and end of daylight savings time. Enter the dates for the start and end of daylight savings if required for the location. Brodefs also will activate the Broadcast function which enables the holiday periods that are defined on the LID.

Other Tables — The Alarmdef, Cons-def, and Runt-def contain tables for use with a CCN system. See the applicable CCN manual for more information on these tables. These tables can only be defined through a CCN Building Supervisor.

CHECK VOLTAGE SUPPLY — Access the Status 01 screen and read the actual line voltage. This reading should be equal to the incoming power to the starter. Use a voltmeter to check incoming power at the starter power leads. If the readings are not equal, calibrate the voltage reading on the LID screen by highlighting the LINE VOLTAGE: PERCENT valve. Press SELECT, then press INCREASE or DECREASE until the value equals the percent of rated voltage that is actually seen. Press ENTER to complete.

PERFORM AN AUTOMATED CONTROL TEST — Check the safety controls status by performing an automated controls test. Access the Control Test table and select the Automated Tests function (Table 6).

The Automated Control Test will check all outputs and inputs for function. The compressor must be in the OFF mode in order to operate the controls test, and the 24-v input to the SMM must be in range (per line voltage percent on Status01 table). The OFF mode is caused by pressing the STOP pushbutton on the LID. Each test will ask the operator to confirm that the operation is occurring and whether or not to continue. If an error occurs, the operator can try to address the problem as the test is being done or note the problem and proceed to the next test.

NOTE: If during the Control Test the guide vanes do not open, check to see that the low pressure alarm is not active. (This will cause the guide vanes to close).

NOTE: The oil pump test will not energize the oil pump if cooler pressure is below –5 psig (–35 kPa).

When the test is finished or the EXIT softkey is pressed, the test will stop, and the Control Test menu will be displayed. If a specific automated test procedure is not completed, access the particular control test to test the

(Continued on page 47.)

function when ready. The Control Test menu is described as follows:

Automated Tests	As described above, a complete control test.
PSIO Thermistors	Check of all PSIO thermistors only.
Options Thermistors	Check of all options boards thermistors.
Transducers	Check of all transducers.
Guide Vane Actuator	Check of the guide vane operation.
Pumps	Check operation of pump outputs, either all pumps can be activated, or individual pumps. The test will also test the associated input such as flow or pressure.
Discrete Outputs	Activation of all on/off outputs or individually.
Pumpdown/Lockout	Pumpdown prevents the low refrigerant alarm during evacuation so refrigerant can be removed from the unit, locks the compressor off, and starts the water pumps.
Terminate Lockout	To charge refrigerant and enable the chiller to run after pumpdown lockout.

Check Optional Pumpout System Controls and Compressor — Controls include an on/off switch, a 3-amp fuse, the compressor overloads, an internal thermostat, a compressor contactor, and a refrigerant high pressure cutout. The high pressure cutout is factory set to open at 161 psig (1110 kPa) and reset at 130 psig (896 kPa). Check that the water-cooled condenser has been connected. Loosen the compressor holddown bolts to allow free spring travel. Open the compressor suction and discharge service valves. Check that oil is visible in the compressor sight glass. Add oil if necessary.

See Pumpout and Refrigerant Transfer Procedures and Optional Pumpout System Maintenance sections, pages 51 and 58, for details on transfer of refrigerant, oil specifications, etc.

High Altitude Locations — Recalibration of the pressure transducers will be necessary, because the chiller was initially calibrated at sea level. Please see the calibration procedure in the Troubleshooting Guide section.

Charge Refrigerant into Chiller

⚠ CAUTION

The transfer, addition, or removal of refrigerant in spring isolated chillers may place severe stress on external piping if springs have not been blocked in both up and down directions.

The standard 19XR chiller will have the refrigerant already charged in the vessels. The 19XR may be ordered with a nitrogen holding charge of 15 psig (103 kPa). Evacuate the entire chiller, and charge chiller from refrigerant cylinders.

19XR CHILLER EQUALIZATION WITHOUT PUMPOUT UNIT

⚠ WARNING

When equalizing refrigerant pressure on the 19XR chiller after service work or during the initial chiller start-up, *do not use the discharge isolation valve to equalize.* Either the motor cooling isolation valve or charging hose (connected between pumpout valves on top of cooler and condenser) is to be used as the equalization valve.

Table 6 — Control Test Menu Functions

TESTS TO BE PERFORMED	DEVICES TESTED
1. Automated Tests*	Operates the second through seventh tests
2. PSIO Thermistors	Entering chilled water Leaving chilled water Entering condenser water Leaving condenser water Discharge temperature Bearing temperature Motor winding temperature Oil sump temperature
3. Options Thermistors	Common chilled water supply sensor Common chilled water return sensor Remote reset sensor Temperature sensor Spare 1 Spare 2 Spare 3 Spare 4 Spare 5 Spare 6 Spare 7 Spare 8 Spare 9
4. Transducers	Evaporator pressure Condenser pressure Oil pressure differential Oil pump pressure
5. Guide Vane Actuator	Open Close
6. Pumps	All pumps or individual pumps may be activated: Oil pump — Confirm pressure Chilled water pump — Confirm flow Condenser water pump — Confirm flow
7. Discrete Outputs	All outputs or individual outputs may be energized: Hot gas bypass relay Oil heater relay Motor cooling relay Tower fan relay Alarm relay Shunt trip relay
8. Pumpdown/Lockout	When using pumpdown/lockout, observe freeze up precautions when removing charge: Instructs operator as to which valves to close and when Starts chilled water and condenser water pumps and confirms flows Monitors Evaporator pressure Condenser pressure Evaporator temperature during pumpout procedures Turns pumps off after pumpdown Locks out compressor
9. Terminate Lockout	Starts pumps and monitors flows Instructs operator as to which valves to open and when Monitors Evaporator pressure Condenser pressure Evaporator temperature during charging process Terminates compressor lockout

*During any of the tests that are not automated, an out-of-range reading will have an asterisk (*) next to the reading and a message will be displayed.

To equalize the pressure differential on a refrigerant isolated 19XL chiller, use the TERMINATE LOCKOUT function of the Control Test in the SERVICE menu. This will help to turn on pumps and advise the proper procedure. The following procedure describes how to equalize refrigerant pressure on an isolated 19XR chiller without a pumpout unit:

1. Access TERMINATE LOCKOUT function on the Control Test.
2. Turn on the chilled water and condenser water pumps to ensure against freezing.
3. Slowly open the refrigerant cooling isolation valve. The chiller cooler and condenser pressures will gradually equalize. This process will take approximately 15 minutes.
4. Once the pressures have equalized, the cooler isolation valve, the condenser isolaion valve, and the hot gas isolation valve may now be opened. Refer to Fig. 26 and 27, Valves 11, 12, and 14.

⚠ WARNING

Whenever turning the discharge isolation valve, be sure to re-attach the valve locking device. This will prevent the valve from opening or closing during service work or during chiller operation.

19XR CHILLER EQUALIZATION WITH PUMPOUT UNIT — The following procedure describes how to equalize refrigerant pressure on an isolated 19XR chiller using the pumpout unit:

1. Access the TERMINATE LOCKOUT mode in the Control Test.
2. Turn on the chilled water and condenser water pumps to prevent possible freezing.
3. Open valve 4 on the pumpout unit and open valves 1a and 1b on the chiller cooler and condenser, Fig. 26 and 27. Slowly open valve 2 on the pumpout unit to equalize the pressure. This process will take approximately 15 minutes.
4. Once the pressures have equalized, the discharge isolation valve, cooler isolation valve, optional hot gas bypass isolation valve, and the refrigerant isolation valve can be opened. Close valves 1a and 1b, and all pumpout unit valves.

⚠ WARNING

Whenever turning the discharge isolation valve, be sure to re-attach the valve locking device. This will prevent the valve from opening or closing during service work or during chiller operation.

The full refrigerant charge on the 19XR will vary with chiller components and design conditions, indicated on the job data specifications. An approximate charge may be found by adding the condenser charge to the cooler charge listed in Table 7.

Always operate the condenser and chilled water pumps during charging operations to prevent freeze-ups. Use the Control Test Terminate Lockout to monitor conditions and start the pumps.

If the chiller has been shipped with a holding charge, the the refrigerant will be added through the refrigerant charging valve (Fig. 26 and 27, valve 7) or to the pumpout charging connection. First evacuate the nitrogen holding charge from the chiller vessels. Charge the refrigerant as a gas until the system pressure exceeds 35 psig (141 kPa) for HFC-134a. After the chiller is beyond this pressure the refrigerant should be charged as a liquid until all the recommended refrigerant charge has been added.

TRIMMING REFRIGERANT CHARGE — The 19XR is shipped with the correct charge for the design duty of the chiller. Trimming the charge can best be accomplished when design load is available. To trim, check the temperature difference between leaving chilled water temperature and cooler refrigerant temperature at full load design conditions. If necessary, add or remove refrigerant to bring the temperature difference to design conditions or minimum differential.

Table 7 — Refrigerant (HFC-134a) Charge

COOLER HEAT EXCHANGER CODE	REFRIGERANT CHARGE (lb)	REFRIGERANT CHARGE (kg)
30	630	286
31	700	318
32	770	350
35	730	332
36	810	368
37	880	400
40	840	382
41	910	414
42	970	441
45	970	441
46	1050	477
47	1120	509
50	1150	523
51	1240	564
52	1300	591
55	1340	609
56	1450	659
57	1510	686
60	1380	627
61	1460	664
62	1510	686
65	1610	732
66	1690	768
67	1760	800

INITIAL START-UP

Preparation — Before starting the chiller, check that the:

1. Power is on to the main starter, oil pump relay, tower fan starter, oil heater relay, and the chiller control center.
2. Cooling tower water is at proper level and at or below design entering temperature.
3. Chiller is charged with refrigerant and all refrigerant and oil valves are in their proper operating position.
4. Oil is at the proper level in the reservoir sight glasses.
5. Oil reservoir temperature is above 140 F (60 C) or refrigerant temperature plus 50° F (28° C).
6. Valves in the evaporator and condenser water circuits are open.

   NOTE: If pumps are not automatic, make sure water is circulating properly.
7. Solid-state starter checks: The Power +15 and the Phase Correct LEDs must be lit before the starter will energize. If the Power +15 LED is not on, incoming voltage is not present or is incorrect. If the Phase Correct LED is not lit, rotate any 2 incoming phases to correct the phasing.

⚠ WARNING

Do not permit water or brine that is warmer than 110 F (43 C) to flow through the cooler or condenser. Refrigerant overpressure may discharge through the relief devices and result in the loss of refrigerant charge.

8. Press RELEASE to automate the chiller start/stop value on the Status01 table to enable the chiller to start. The initial factory setting of this value is overridden to stop in order to prevent accidental start-up.

Manual Operation of the Guide Vanes — Manual operation of the guide vanes is helpful to establish a steady motor current for calibrating the motor amps value.

In order to manually operate the guide vanes, it is necessary to override the *TARGET GUIDE VANE POSITION* value which is accessed on the Status01 table. Manual control is indicated by the word ''SUPVSR!'' flashing after the target value position. Manual control is also indicated on the default screen on the run status line.

1. Access the Status01 table and look at the target guide vane position (Fig. 15). If the compressor is off, the value will read zero.
2. Move the highlight bar to the *TARGET GUIDE VANE POSITION* line and press the SELECT softkey.
3. Press ENTER to override the automatic target. The screen will now read a value of zero, and the word ''SUPVSR!'' will flash.
4. Press the SELECT softkey, and then press RELEASE softkey to release the vanes to AUTOMATIC mode. After a few seconds the ''SUPVSR!'' will disappear.

Dry Run to Test Start-Up Sequence

1. Disengage the main motor disconnect on the starter front panel. This should only disconnect the motor power. Power to the controls, oil pump, and starter control circuit should still be energized.
2. Look at the default screen on the LID: the Status message in the upper left-hand corner will read, ''Manually Stopped.'' Press CCN or Local to start. If the chiller controls do not go into a start mode, go to the Schedule screen and override the schedule or change the occupied time. Press the LOCAL softkey to begin the start-up sequences.
3. Check that chilled water and condenser water pumps energize.
4. Check that the oil pump starts and pressurizes the lubrication system. After the oil pump has run about 11 seconds, the starter will be energized and go through its start-up sequence.
5. Check the main contactor for proper operation.
6. The PIC will eventually show an alarm for motor amps not sensed. Reset this alarm and continue with the initial start-up.

Check Rotation

1. Engage the main motor disconnect on the front of the starter panel. The motor is now ready for rotation check.
2. After the default screen Status message states ''Ready for Start'' press the LOCAL softkey; start-up checks will be made by the control.
3. When the starter is energized and the motor begins to turn, check for clockwise rotation (Fig. 29).

IF ROTATION IS PROPER, allow the compressor to come up to speed.

IF THE MOTOR ROTATION IS NOT CLOCKWISE (as viewed through the sight glass), reverse any 2 of the 3 incoming power leads to the starter and recheck rotation.

NOTE: Solid-state starters have phase protection and will not allow a start if the phase is not correct. If this happens, a Starter Fault message will appear.

⚠ CAUTION

Do not check motor rotation during coastdown. Rotation may have reversed during equalization of vessel pressures.

Check Oil Pressure and Compressor Stop

1. When the motor is up to full speed, note the differential oil pressure reading on the LID default screen. It should be between 18 and 30 psid (124 to 206 kPad).
2. Press the Stop button and listen for any unusual sounds from the compressor as it coasts to a stop.

Calibrate Motor Current Demand Setting

1. Make sure that the compressor motor rated load amps in the Service1 table has been configured. Place an ammeter on the line that passes through the motor load current transfer on the motor side of the power factor correction capacitors (if provided).
2. Start the compressor and establish a steady motor current value between 70% and 100% RLA by manually overriding the guide vane target value on the LID and setting the chilled water set point to a low value. Do not exceed 105% of the nameplate RLA.
3. When a steady motor current value in the desired range is met, compare the compressor motor amps value on the Status01 table to the actual amps shown on the ammeter on the starter. Adjust the amps value on the LID to the actual value seen at the starter if there is a difference. Highlight the amps value then press SELECT. Press INCREASE or DECREASE to bring the value to that indicated on the ammeter. Press ENTER when equal.
4. Make sure that the target guide vane position is released into AUTOMATIC mode.

To Prevent Accidental Start-Up — The PIC can be set up so that start-up of the unit is more difficult than just pressing the LOCAL or CCN softkeys during chiller service or when necessary. By accessing the Status01 table and highlighting the chiller Start/Stop line, the value can be overridden to stop by pressing SELECT and then the STOP and ENTER softkeys. ''SUPVSR'' will

CORRECT MOTOR ROTATION IS CLOCKWISE WHEN VIEWED THROUGH TURBINE SIGHT GLASS

TO CHECK ROTATION, ENERGIZE COMPRESSOR MOTOR MOMENTARILY. DO NOT LET MACHINE DEVELOP CONDENSER PRESSURE. CHECK ROTATION IMMEDIATELY.

ALLOWING CONDENSER PRESSURE TO BUILD OR CHECKING ROTATION WHILE MACHINE COASTS DOWN MAY GIVE A FALSE INDICATION DUE TO GAS PRESSURE EQUALIZING THROUGH COMPRESSOR.

Fig. 29 − Correct Motor Rotation

appear after the value. When attempting to restart, remember to release the override. The default machine message line will also state that the Start/Stop has been set to ‘‘Start’’ or ‘‘Stop’’ when the value is overridden.

Check Chiller Operating Condition — Check to be sure that chiller temperatures, pressures, water flows, and oil and refrigerant levels indicate that the system is functioning properly.

Instruct the Customer Operator — Check to be sure that the operator(s) understand all operating and maintenance procedures. Point out the various chiller parts and explain their function as part of the complete system.

COOLER-CONDENSER — Float chamber, relief devices, refrigerant charging valve, temperature sensor locations, pressure transducer locations, Schrader fittings, waterboxes and tubes, and vents and drains.

OPTIONAL PUMPOUT STORAGE TANK AND PUMPOUT SYSTEM — Transfer valves and pumpout system, refrigerant charging and pumpdown procedure, and relief devices.

MOTOR COMPRESSOR ASSEMBLY — Guide vane actuator, transmission, motor cooling system, oil cooling system, temperature and pressure sensors, oil sight glasses, integral oil pump, isolatable oil filter, extra oil and motor temperature sensors, synthetic oil, and compressor serviceability.

MOTOR COMPRESSOR LUBRICATION SYSTEM — Oil pump, cooler filter, oil heater, oil charge and specification, operating and shutdown oil level, temperature and pressure, and oil charging connections.

CONTROL SYSTEM — CCN and Local start, reset, menu, softkey functions, LID operation, occupancy schedule, set points, safety controls, and auxiliary and optional controls.

AUXILIARY EQUIPMENT — Starters and disconnects, separate electrical sources, pumps, and cooling tower.

DESCRIBE CHILLER CYCLES — Refrigerant, motor cooling, lubrication, and oil reclaim.

REVIEW MAINTENANCE — Scheduled, routine, and extended shutdowns, importance of a log sheet, importance of water treatment and tube cleaning, and importance of maintaining a leak-free chiller.

SAFETY DEVICES AND PROCEDURES — Electrical disconnects, relief device inspection, and handling refrigerant.

CHECK OPERATOR KNOWLEDGE — Start, stop, and shutdown procedures, safety and operating controls, refrigerant and oil charging, and job safety.

REVIEW THE START-UP, OPERATION, AND MAINTENANCE MANUAL

OPERATING INSTRUCTIONS

Operator Duties

1. Become familiar with refrigeration chiller and related equipment before operating the chiller.
2. Prepare the system for start-up, start and stop the chiller, and place the system in a shutdown condition.
3. Maintain a log of operating conditions and document any abnormal readings.
4. Inspect the equipment, make routine adjustments, and perform a Control Test. Maintain the proper oil and refrigerant levels.
5. Protect the system from damage during shutdown periods.
6. Maintain the set point, time schedules, and other PIC functions.

Prepare the Chiller for Start-Up — Follow the steps described in the Initial Start-Up section, page 48.

To Start the Chiller

1. Start the water pumps, if they are not automatic.
2. On the LID default screen, press the LOCAL or CCN softkey to start the system. If the chiller is in the OCCUPIED mode and the start timers have expired, the start sequence will start. Follow the procedure described in the Start-Up/Shutdown/Recycle section, page 36.

Check the Running System — After the compressor starts, the operator should monitor the LID display and observe the parameters for normal operating conditions:

1. The oil reservoir temperature should be above 120 F (49 C) during shutdown, and above 125 F (58 C) during compressor operation.
2. The bearing oil temperature accessed on the Status01 table should be 120 to 165 F (49 to 74 C). If the bearing temperature reads more than 180 F (83 C) with the oil pump running, stop the chiller and determine the cause of the high temperature. *Do not restart* the chiller until corrected.
3. The oil level should be visible anywhere in one of the two sight glasses. Foaming oil is acceptable as long as the oil pressure and temperature are within limits.
4. The oil pressure should be between 18 and 30 psid (124 to 207 kPad) differential, as seen on the LID default screen. Typically the reading will be 18 to 25 psid (124 to 172 kPad) at initial start-up.
5. The moisture indicator sight glass on the refrigerant motor cooling line should indicate refrigerant flow and a dry condition.
6. The condenser pressure and temperature varies with the chiller design conditions. Typically the pressure will range between 100 and 210 psig (690 to 1450 kPa) with a corresponding temperature range of 60 to 105 F (15 to 41 C). The condenser entering water temperature should be controlled below the specified design entering water temperature to save on compressor kilowatt requirements.
7. Cooler pressure and temperature also will vary with the design conditions. Typical pressure range will be between 60 and 80 psig (410 and 550 kPa), with temperature ranging between 34 and 45 F (1 and 8 C).
8. The compressor may operate at full capacity for a short time after the pulldown ramping has ended, even though the building load is small. The active electrical demand setting can be overridden to limit the compressor IkW, or the pulldown rate can be decreased to avoid a high demand charge for the short period of high demand operation. Pulldown rate can be based on load rate or temperature rate. It is accessed on the Equipment Configuration screen, Config table (Table 2, Example 5).

To Stop the Chiller

1. The occupancy schedule will start and stop the chiller automatically once the time schedule is set up.
2. By pressing the STOP button for one second, the alarm light will blink once to confirm that the button has been pressed. Then, the compressor will follow the normal shutdown sequence as described in the Controls section. The chiller will not restart until the CCN or LOCAL softkey is pressed. The chiller is now in the OFF mode.

If the chiller fails to stop, in addition to action that the PIC will initiate, the operator should close the guide vanes by overriding the guide vane target to zero to reduce chiller load; then, open the main disconnect. Do not attempt to stop the chiller by opening an isolating knife switch. High intensity arcing may occur. *Do not restart* the chiller until the problem is diagnosed and corrected.

After Limited Shutdown — No special preparations should be necessary. Follow the regular preliminary checks and starting procedures.

Extended Shutdown — The refrigerant should be transferred into the pumpout storage tank (if supplied; see Pumpout and Refrigerant Transfer Procedures) in order to reduce chiller pressure and the possibility of leaks. Maintain a holding charge of 5 to 10 lbs (2.27 to 4.5 kg) of refrigerant or nitrogen to prevent air from leaking into the chiller.

If freezing temperatures are likely to occur in the chiller area, drain the chilled water, condenser water, and the pumpout condenser water circuits to avoid freeze-up. Keep the waterbox drains open.

Leave the oil charge in the chiller with the oil heater and controls energized to maintain the minimum oil reservoir temperature.

After Extended Shutdown — Be sure that the water system drains are closed. It may be advisable to flush the water circuits to remove any soft rust which may have formed. This is a good time to brush the tubes if necessary.

Check the cooler pressure on the LID default screen, and compare to the original holding charge that was left in the chiller. If (after adjusting for ambient temperature changes) any loss in pressure is indicated, check for refrigerant leaks. See Check Chiller Tightness section, page 38.

Recharge the chiller by transferring refrigerant from the pumpout storage tank (if supplied). Follow the Pumpout and Refrigerant Transfer Procedures section, page 51. Observe freeze-up precautions.

Carefully make all regular preliminary and running system checks. Perform a Control Test before start-up. If the compressor oil level appears abnormally high, the oil may have absorbed refrigerant. Make sure that the oil temperature is above 140 F (60 C) or cooler refrigerant temperature plus 50° F (27° C).

Cold Weather Operation — When the entering condenser water drops very low, the operator should automatically cycle the cooling tower fans off to keep the temperature up. Piping may also be arranged to bypass the cooling tower. The PIC controls have a low limit tower fan relay (PR3) that can be used to assist in this control.

Manual Guide Vane Operation — Manual operation of the guide vanes in order to check control operation or control of the guide vanes in an emergency operation is possible by overriding the target guide vane position. Access the Status01 table on the LID and highlight *TARGET GUIDE VANE POSITION*. To control the position, enter a percentage of guide vane opening that is desired. Zero percent is fully closed, 100% is fully open. To release the guide vanes to AUTOMATIC mode, press the RELEASE softkey.

NOTE: Manual control will increase the guide vanes and override the pulldown rate during start-up. Motor current above the electrical demand setting, capacity overrides, and chilled water below control point will override the manual target and close the guide vanes. For descriptions of capacity overrides and set points, see the Controls section.

Refrigeration Log — A refrigeration log, such as the one shown in Fig. 30, provides a convenient checklist for routine inspection and maintenance and provides a continuous record of chiller performance. It is an aid in scheduling routine maintenance and in diagnosing chiller problems.

Keep a record of the chiller pressures, temperatures, and liquid levels on a sheet similar to that shown. Automatic recording of PIC data is possible through the use of CCN devices such as the Data Collection module and a Building Supervisor. Contact your Carrier representative for more information.

PUMPOUT AND REFRIGERANT TRANSFER PROCEDURES

Preparation — The 19XR may come equipped with an optional pumpout storage tank, pumpout system, or pumpout compressor. The refrigerant can be pumped for service work to either the chiller compressor vessel or chiller condenser vessel by using the optional pumpout system. If a pumpout storage tank is supplied, the refrigerant can be isolated in the storage tank. The following procedures describe how to transfer refrigerant from vessel to vessel and perform chiller evacuations.

Operating the Optional Pumpout Unit

1. Be sure that the suction and the discharge service valves on the optional pumpout compressor are open (backseated) during operation. Rotate the valve stem fully counterclockwise to open. Frontseating the valve closes the refrigerant line and opens the gage port to compressor pressure.
2. Make sure that the compressor holddown bolts have been loosened to allow free spring travel.
3. Open the refrigerant inlet valve on the pumpout compressor.
4. Oil should be visible in the pumpout unit compressor sight glass under all operating conditions and during shutdown. If oil is low, add oil as described under Optional Pumpout System Maintenance section, page 58. The pumpout unit control wiring schematic is detailed in Fig. 31.

TO READ REFRIGERANT PRESSURES during pumpout or leak testing:

1. The LID display on the chiller control center is suitable for determining refrigerant-side pressures and low (soft) vacuum. To assure the desired range and accuracy when measuring evacuation and dehydration, use a quality vacuum indicator or manometer. This can be placed on the Schrader connections on each vessel (Fig. 7) by removing the pressure transducer.
2. To determine pumpout storage tank pressure, a 30 in.-0-400 psi (-101-0-2760 kPa) gage is attached to the storage tank.
3. Refer to Fig. 26, 27, and 32 for valve locations and numbers.

⚠ CAUTION

Transfer, addition, or removal of refrigerant in spring-isolated chillers may place severe stress on external piping if springs have not been blocked in both up and down directions.

Date_____

REFRIGERATION LOG CARRIER 19XR HERMETIC CENTRIFUGAL REFRIGERATION MACHINE

Plant_____ **MACHINE MODEL NO.**_____ **MACHINE SERIAL NO.**_____ **REFRIGERANT TYPE**_____

DATE_____	COOLER							CONDENSER							COMPRESSOR						
TIME	Refrigerant		Water					Refrigerant		Water					BEARING TEMP	Oil			Motor	OPER-ATOR INITIALS	REMARKS
			Pressure			Temp				Pressure			Temp						FLA_____		
	Press.	Temp	In	Out	GPM	In	Out	Press.	Temp	In	Out	GPM	In	Out		Press. Diff.	Temp (reservoir)	Level	Amperage (or vane position)		

REMARKS: Indicate shutdowns on safety controls, repairs made, oil or refrigerant added or removed, air exhausted and water drained from dehydrator. Include amounts.

Fig. 30 — Refrigeration Log

Chillers with Storage Tanks — If the chiller has isolation valves, leave them open for the following procedures. The letter "C" describes a closed valve. See Fig. 15, 16, 26, and 27.

TRANSFER REFRIGERANT FROM PUMPOUT STORAGE TANK TO CHILLER

1. Equalize refrigerant pressure.
   a. Use the Control Test Terminate Lockout to turn on water pumps and monitor pressures.
   b. Close pumpout unit valves 2, 4, 5, 8, and 10, and close chiller charging valve 7; open chiller isolation valves 11, 12, 13, and 14 (if present).
   c. Open pumpout unit/storage tank valves 3 and 6, open chiller valves 1a and 1b.

VALVE	1a	1b	2	3	4	5	6	7	8	10	11	12	13	14
CONDITION			C		C	C		C	C	C				

   d. Gradually crack open valve 5 to increase chiller pressure to 68 psig 35 psig (141 kPa) for HFC-134a. Slowly feed refrigerant to prevent freeze up.
   e. Open valve 5 fully after the pressure rises above the freeze point of the refrigerant. Open liquid line valves 7 and 10 until refrigerant pressure equalizes.

VALVE	1a	1b	2	3	4	5	6	7	8	10	11	12	13	14
CONDITION			C		C				C					

2. Transfer remaining refrigerant.
   a. Close valve 5 and open valve 4.

VALVE	1a	1b	2	3	4	5	6	7	8	10	11	12	13	14
CONDITION			C			C			C					

   b. Turn off the chiller water pumps through the LID.
   c. Turn off the pumpout condenser water, and turn on the pumpout compressor to push liquid out of the storage tank.
   d. Close liquid line valve 7.
   e. Turn off the pumpout compressor.
   f. Close valves 3 and 4.
   g. Open valves 2 and 5.

VALVE	1a	1b	2	3	4	5	6	7	8	10	11	12	13	14
CONDITION				C	C			C	C					

   h. Turn on pumpout condenser water.
   i. Run the pumpout compressor until the pumpout storage tank pressure reaches 5 psig (34 kPa) (18 in. Hg [40 kPa absolute] if repairing the tank).
   j. Turn off the pumpout compressor.
   k. Close valves 1a, 1b, 2, 5, 6, and 10.

VALVE	1a	1b	2	3	4	5	6	7	8	10	11	12	13	14
CONDITION	C	C	C	C	C	C	C	C	C	C				

   l. Turn off pumpout condenser water.

TRANSFER THE REFRIGERANT FROM CHILLER TO PUMPOUT STORAGE TANK

1. Equalize refrigerant pressure.
   a. Valve positions:

VALVE	1a	1b	2	3	4	5	6	7	8	10	11	12	13	14
CONDITION			C		C	C		C	C					

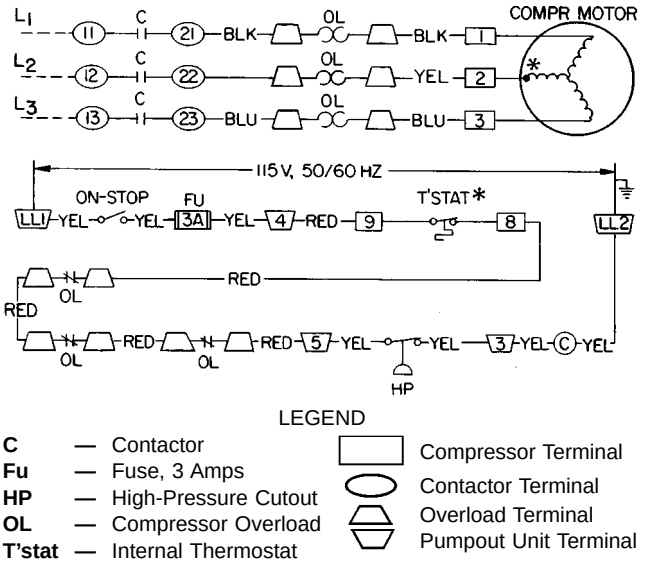

Fig. 31 — 19XR Pumpout Unit Wiring Schematic

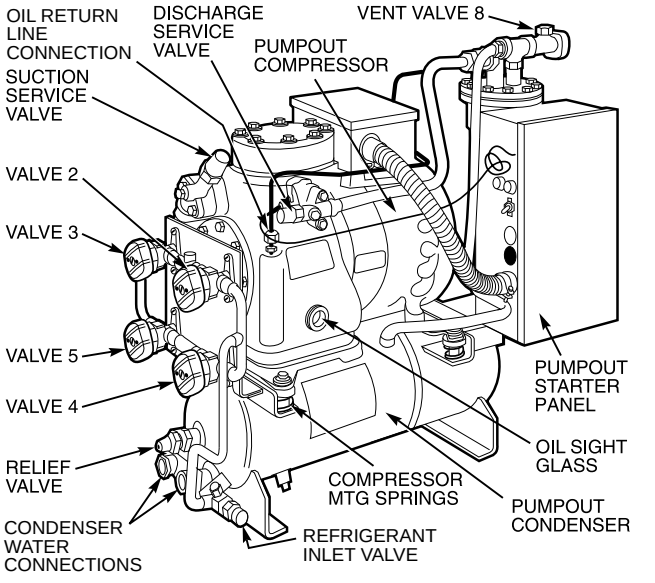

Fig. 32 — Optional Pumpout Unit

   b. Slowly open valve 5. When pressures are equalized, open liquid line valves 7 and 10 to allow liquid refrigerant to drain by gravity into the pumpout storage tank.

VALVE	1a	1b	2	3	4	5	6	7	8	10	11	12	13	14
CONDITION			C		C				C					

2. Transfer the remaining liquid.
   a. Turn off pumpout condenser water. Place valves in the following positions:

VALVE	1a	1b	2	3	4	5	6	7	8	10	11	12	13	14
CONDITION				C	C				C					

b. Run the pumpout compressor for approximately 30 minutes then close valve 10.

VALVE	1a	1b	2	3	4	5	6	7	8	10	11	12	13	14
CONDITION				C	C				C	C				

c. Turn off the pumpout compressor.

3. Remove any remaining refrigerant.
   a. Turn on chiller water pumps through using the Control Test Pumpdown.
   b. Turn on pumpout condenser water.
   c. Place valves in the following positions:

VALVE	1a	1b	2	3	4	5	6	7	8	10	11	12	13	14
CONDITION			C			C			C	C				

   d. Run the pumpout compressor until the chiller pressure reaches 30 psig (207 kPa) for HFC-134a. Then, shut off the pumpout compressor. Warm condenser water will boil off any entrapped liquid refrigerant and chiller pressure will rise.
   e. When the pressure rises to 40 psig (276 kPa) for HFC-134a, turn on the pumpout compressor until the pressure again reaches 30 psig (207 kPa), and then turn off the compressor. Repeat this process until the pressure no longer rises. Then, turn on the pumpout compressor and pumpout until the pressure reaches 18 in. Hg. (40 kPa absolute).
   f. Close valves 1a, 1b, 3, 4, 6, and 10.

VALVE	1a	1b	2	3	4	5	6	7	8	10	11	12	13	14
CONDITION	C	C	C	C	C	C	C	C	C	C				

   g. Turn off the pumpout condenser water and continue with the Control Test for Pumpdown, which will lock out the chiller compressor for operation.

4. Establish vacuum for service.

   To conserve refrigerant, operate the pumpout compressor until the chiller pressure is reduced to 18 in. Hg vac., ref 30 in. bar. (40 kPa abs.) following Step 3e.

Chillers with Isolation Valves

TRANSFER ALL REFRIGERANT TO CHILLER CONDENSER VESSEL — For chillers with isolation valves, refigerant can be stored in one chiller vessel or the other without the need for an external storage tank.

1. Push refrigerant into chiller condenser.
   a. Valve positions:

VALVE	1a	1b	2	3	4	5	8	11	12	13	14
CONDITION				C	C		C		C	C	C

   b. Turn off chiller water pumps and pumpout condenser water.
   c. Turn on pumpout compressor to push liquid out of the chiller cooler vessel.
   d. When all liquid has been pushed into the chiller condenser vessel, close chiller isolation valve 11.
   e. Access the Control Test, Pumpdown table on the LID display to turn on the chiller water pumps.
   f. Turn off the pumpout compressor.
2. Evacuate gas from chiller cooler vessel.
   a. Close pumpout compressor valves 2 and 5, and open valves 3 and 4.

VALVE	1a	1b	2	3	4	5	8	11	12	13	14
CONDITION			C			C	C	C	C	C	C

   b. Turn on pumpout condenser water.
   c. Run pumpout compressor until the chiller cooler vessel pressure reaches 18 in. Hg vac (40 kPa abs.). Monitor pressures on the LID and on refrigerant gages.
   d. Close valve 1a.
   e. Turn off pumpout compressor.
   f. Close valves 1b, 3, and 4.

VALVE	1a	1b	2	3	4	5	8	11	12	13	14
CONDITION	C	C	C	C	C	C	C	C	C	C	C

   g. Turn off pumpout condenser water.
   h. Proceed to Pumpdown test on the LID to turn off chiller water pumps and lock out chillercompressor.

TRANSFER ALL REFRIGERANT TO CHILLER COOLER VESSEL

1. Push refrigerant into the chiller cooler vessel.
   a. Valve positions:

VALVE	1a	1b	2	3	4	5	8	11	12	13	14
CONDITION			C			C	C		C	C	C

   b. Turn off chiller water pumps and pumpout condenser water.
   c. Turn on pumpout compressor to push refrigerant out of the chiller condenser.
   d. When all liquid is out of the chiller condenser, close cooler isolation valve 11.
   e. Turn off the pumpout compressor.
2. Evacuate gas from the chiller condenser vessel.
   a. Access the Control Test, Pumpdown table on the LID display to turn on the chiller water pumps.
   b. Close pumpout unit valves 3 and 4; open valves 2 and 5.

VALVE	1a	1b	2	3	4	5	8	11	12	13	14
CONDITION				C	C		C	C	C	C	C

   c. Turn on pumpout condenser water.
   d. Run the pumpout compressor until the chiller condenser pressure reaches 18 in. Hg vac (40 kPa abs.). Monitor pressure at the LID and refrigerant gages.
   e. Close valve 1b.
   f. Turn off pumpout compressor.
   g. Close valves 1a, 2, and 5.

VALVE	1a	1b	2	3	4	5	8	11	12	13	14
CONDITION	C	C	C	C	C	C	C	C	C	C	C

   h. Turn off pumpout condenser water.
   i. Proceed to Pumpdown test on the LID to turn off chiller water pumps and lockout chiller compressor.

RETURN REFRIGERANT TO NORMAL OPERATING CONDITIONS

1. Be sure that the vessel that was opened has been evacuated.
2. Access the Control Test Terminate Lockout table to view vessel pressures and turn on chiller water pumps.
3. Open valves 1a, 1b, and 3.

VALVE	1a	1b	2	3	4	5	8	11	12	13	14
CONDITION			C		C	C	C	C	C	C	C

4. Crack open valve 5, gradually increasing pressure in the evacuated vessel to 35 psig (141 kPa). Feed refrigerant slowly to prevent tube freeze up.

5. Leak test to ensure vessel integrity.
6. Open valve 5 fully.

VALVE	1a	1b	2	3	4	5	8	11	12	13	14
CONDITION			C		C		C	C	C	C	C

7. Open valve 11 to equalize the liquid refrigerant level between vessels.
8. Close valves 1a, 1b, 3, and 5.
9. Open isolation valves 12, 13, and 14 (if present).

VALVE	1a	1b	2	3	4	5	8	11	12	13	14
CONDITION	C	C	C	C	C	C	C				

10. Proceed to Terminate Pumpdown Lockout test to turn off water pumps and enable the chiller compressor for start-up.

GENERAL MAINTENANCE

Refrigerant Properties — HFC-134a is the standard refrigerant for the 19XR chiller. At normal atmospheric pressure, HFC-134a will boil at –14 F (–25 C) and must, therefore, be kept in pressurized containers or storage tanks. The refrigerant is practically odorless when mixed with air and is non-combustible at atmospheric pressure. Read the Material Safety Data Sheet and the latest ASHRAE Safety Guide for Mechanical Refrigeration to learn more about safe handling of this refrigerant.

⚠ DANGER

HFC-134a will dissolve oil and some non-metallic materials, dry the skin, and, in heavy concentrations, may displace enough oxygen to cause asphyxiation. When handling this refrigerant, protect the hands and eyes and avoid breathing fumes.

Adding Refrigerant — Follow the procedures described in Trimming Refrigerant Charge section, page 56.

⚠ WARNING

Always use the compressor Pumpdown function in the Control Test table to turn on the evaporator pump and lock out the compressor when transferring refrigerant. Liquid refrigerant may flash into a gas and cause possible freeze-up when the chiller pressure is below 30 psig (207 kPa) for HFC-134a.

Removing Refrigerant — If the optional pumpout system is used, the 19XR refrigerant charge may be transferred to a pumpout storage tank or to the chiller condenser or cooler vessels. Follow procedures in the Pumpout and Refrigerant Transfer Procedures section when removing refrigerant from the storage tank to a chiller vessel.

Adjusting the Refrigerant Charge — If the addition or removal of refrigerant is required for improved chiller performance, follow the procedures given under the Trim Refrigerant Charge section, page 48.

Refrigerant Leak Testing — Because HFC-134a is above atmospheric pressure at room temperature, leak testing can be performed with refrigerant in the chiller. Use an electronic, halide leak detector, soap bubble solution, or ultrasonic leak detector. Be sure that the room is well ventilated and free from concentration of refrigerant to keep false readings to a minimum. Before making any necessary repairs to a leak, transfer all refrigerant from the leaking vessel.

Leak Rate — ASHRAE recommends that chillers should be immediately taken off line and repaired if the refrigerant leak rate for the entire chiller is more than 10% of the operating refrigerant charge per year.

In addition, Carrier recommends that leaks totalling less than the above rate but more than a rate of 1 lb (0.5 kg) per year should be repaired during annual maintenance or whenever the refrigerant is pumped over for other service work.

Test After Service, Repair, or Major Leak — If all refrigerant has been lost or if the chiller has been opened for service, the chiller or the affected vessels must be pressured and leak tested. Refer to the Leak Test Chiller section to perform a leak test.

⚠ WARNING

HFC-134a should not be mixed with air or oxygen and pressurized for leak testing. In general, this refrigerant should not be present with high concentrations of air or oxygen above atmospheric pressures, because the mixture can undergo combustion.

REFRIGERANT TRACER — Use an environmentally acceptable refrigerant as a tracer for leak test procedures.

TO PRESSURIZE WITH DRY NITROGEN — Another method of leak testing is to pressurize with nitrogen only and to use a soap bubble solution or an ultrasonic leak detector to determine if leaks are present. This should only be done if all refrigerant has been evacuated from the vessel.

1. Connect a copper tube from the pressure regulator on the cylinder to the refrigerant charging valve. Never apply full cylinder pressure to the pressurizing line. Follow the listed sequence.
2. Open the charging valve fully.
3. Slowly open the cylinder regulating valve.
4. Observe the pressure gage on the chiller and close the regulating valve when the pressure reaches test level. *Do not exceed* 140 psig (965 kPa).
5. Close the charging valve on the chiller. Remove the copper tube if no longer required.

Repair the Leak, Retest, and Apply Standing Vacuum Test — After pressurizing the chiller, test for leaks with an electronic, halide leak detector, soap bubble solution, or an ultrasonic leak detector. Bring the chiller back to atmospheric pressure, repair any leaks found, and retest.

After retesting and finding no leaks, apply a standing vacuum test, and then dehydrate the chiller. Refer to the Standing Vacuum Test and Chiller Dehydration in the Before Initial Start-Up section, page 41.

Checking Guide Vane Linkage — When the chiller is off, the guide vanes are closed and the actuator mechanism is in the position shown in Fig. 33. If slack develops in the drive chain, backlash can be eliminated as follows:

1. With the chiller shut down and the actuator fully closed, remove the chain guard and loosen the actuator bracket holddown bolts.
2. Loosen guide vane sprocket adjusting bolts.
3. Pry bracket upwards to remove slack, then retighten the bracket holddown bolts.
4. Retighten the guide vane sprocket adjusting bolts. Make sure that the guide vane shaft is rotated fully in the clockwise direction in order for it to be fully closed.

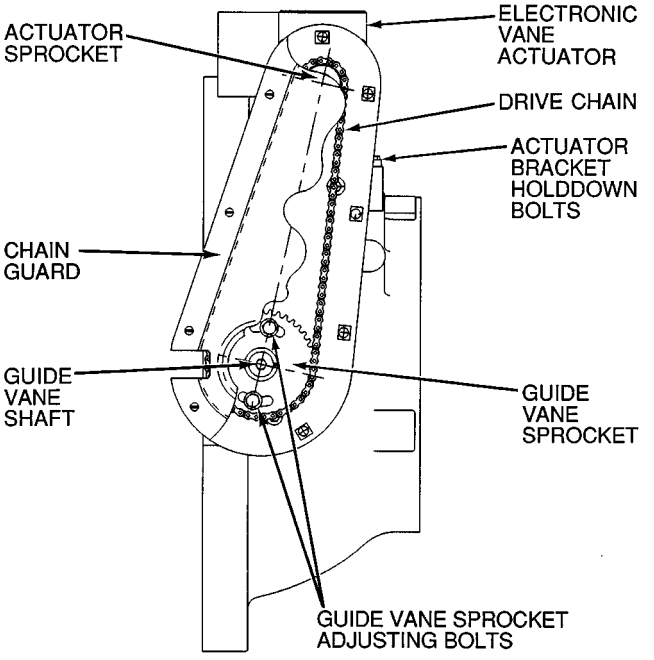

Fig. 33 — Guide Vane Actuator Linkage

Trim Refrigerant Charge — If, to obtain optimal chiller performance, it becomes necessary to adjust the refrigerant charge, operate the chiller at design load and then add or remove refrigerant slowly until the difference between leaving chilled water temperature and the cooler refrigerant temperature reaches design conditions or becomes a minimum. *Do not overcharge.*

Refrigerant may be added either through the storage tank or directly into the chiller as described in the Charge Refrigerant into Chiller section.

To remove any excess refrigerant, follow the procedure in Transfer Refrigerant from Chiller to Pumpout Storage Tank section, Steps 1a and b, page 53.

WEEKLY MAINTENANCE

Check the Lubrication System — Mark the oil level on the reservoir sight glass, and observe the level each week while the chiller is shut down.

If the level goes below the lower sight glass, check the oil reclaim system for proper operation. If additional oil is required, add it through the oil drain charging valve (Fig. 2). A pump is required for adding oil against refrigerant pressure. The oil charge is approximately 8 gallons (30 L) for a Frame 3 compressor, 10 gallons (48 L) for a Frame 4 compressor. The added oil *must* meet Carrier specifications for the 19XR. Refer to Changing Oil Filter and Oil Changes section on this page and page 57. Any additional oil that is added should be logged by noting the amount and date. Any oil that is added due to oil loss that is not related to service will eventually return to the sump. It must be removed when the level is high.

A 1200-watt oil heater is controlled by the PIC to maintain oil temperature (see the Controls section) when the compressor is off. The LID Status02 table displays whether the heater is energized or not. If the PIC shows that the heater is energized, but the sump is not heating up, the power to the oil heater may be off or the oil level may be too low. Check the oil level, the oil heater contactor voltage, and oil heater resistance.

The PIC will not permit compressor start-up if the oil temperature is too low. The control will continue with start-up only after the temperature is within limits.

SCHEDULED MAINTENANCE

Establish a regular maintenance schedule based on the actual chiller requirements such as chiller load, run hours, and water quality. The time intervals listed in this section are offered as guides to service only.

Service Ontime — The LID will display a *SERVICE ONTIME* value on the Status01 table. This value should be reset to zero by the service person or the operator each time major service work is completed so that time between service can be viewed.

Inspect the Control Center — Maintenance is limited to general cleaning and tightening of connections. Vacuum the cabinet to eliminate dust build-up. If the chiller control malfunctions, refer to the Troubleshooting Guide section for control checks and adjustments.

⚠ CAUTION

Be sure power to the control center is off when cleaning and tightening connections inside the control center.

Check Safety and Operating Controls Monthly — To ensure chiller protection, the Control Test Automated Test should be done at least once per month. See Table 3 for safety control settings. See Table 6 for Control Test functions.

Changing Oil Filter — Change the oil filter on a yearly basis or when the chiller is opened for repairs. The 19XR has an isolatable oil filter so that the filter may be changed with the refrigerant remaining in the chiller. Use the following procedure:

1. Make sure that the compressor is off and the disconnect for the compressor is open.
2. Disconnect the power to the oil pump.
3. Close the oil filter isolation valves (Fig. 4).
4. Connect an oil charging hose from the oil charging valve (Fig. 4) and place the other end in a clean container suitable for used oil. The oil drained from the filter housing should be used as an oil sample and sent to a laboratory for proper analysis. *Do not contaminate this sample.*
5. Slowly open the charging valve to drain the oil from the housing.

⚠ CAUTION

The oil filter housing is at a high pressure. Relieve this pressure slowly.

6. Once all oil has been drained, place some rags or absorbent material under the oil filter housing to catch any drips once the filter is opened. Remove the 4 bolts from the end of the filter housing and remove the filter cover.
7. Remove the filter retainer by unscrewing the retainer nut. The filter may now be removed and disposed of properly.
8. Replace the old filter with a new filter. Install the filter retainer and tighten down the retainer nut. Install the filter cover and tighten the 4 bolts.
9. Evacuate the filter housing by placing a vacuum pump on the charging valve. Follow the normal evacuation procedures. Shut the charging valve when done and

reconnect the valve so that new oil can be pumped into the filter housing. Fill with the same amount that was removed, then close the charging valve.

10. Remove the hose from the charging valve, open the isolation valves to the filter housing, and turn on the power to the pump and the motor.

Oil Specification — If oil is added, it must meet the following Carrier specifications:

Oil Type for units using R-134a . . . . . Inhibited polyolester-based synthetic compressor oil formatted for use with HFC, gear-driven, hermetic compressors.

ISO Viscosity Grade 68

The polyolester-based oil (P/N: PP23BZ103) may be ordered from your local Carrier representative.

Oil Changes — Carrier recommends changing the oil after the first year of operation and every five years thereafter as a minimum in addition to a yearly oil analysis. However, if a continuous oil monitoring system is functioning and a yearly oil analysis is performed, time between oil changes can be extended.

TO CHANGE THE OIL

1. Transfer the refrigerant into the chiller condenser (for isolatable vessels) or a pumpout storage tank.
2. Mark the existing oil level.
3. Open the control and oil heater circuit breaker.
4. When the chiller pressure is 5 psi (34 kPa) or less, drain the oil reservoir by opening the oil charging valve (Fig. 2). Slowly open the valve against refrigerant pressure.
5. Change the oil filter at this time. See Changing Oil Filter section.
6. Change the refrigerant filter at this time, see the next section, Refrigerant Filter.
7. Charge the chiller with oil. Charge until the oil level is equal to the oil level marked in Step 2. Turn on the power to the oil heater and let the PIC warm it up to at least 140 F (60 C). Operate the oil pump manually, through the Control Test, for 2 minutes. The oil level should be full in the lower sight glass for shutdown conditions. If the oil level is above ½ full in the upper sight glass, remove the excess oil. The oil level should now be equal to the amount shown in Step 2.

Refrigerant Filter — A refrigerant filter/drier, located on the refrigerant cooling line to the motor, should be changed once a year or more often if filter condition indicates a need for more frequent replacement. Change the filter by closing the filter isolation valves (Fig. 4) and slowly opening the flare fittings with a wrench and back-up wrench to relieve the pressure. A moisture indicator sight glass is located beyond this filter to indicate the volume and moisture in the refrigerant. If the moisture indicator indicates moisture, locate the source of water immediately by performing a thorough leak check.

Oil Reclaim Filter — The oil reclaim system has a strainer on the eductor suction line, a strainer on the discharge pressure line, and a filter on the cooler scavanging line. Replace the filter once per year or more often if filter condition indicates a need for more frequent replacement. Change the filter by closing the filter isolation valves and slowly opening the flare fitting with a wrench and back-up wrench to relieve the pressure. Change the strainers once every 5 years or whenever the cooler is evacuated of refrigerant.

Inspect Refrigerant Float System — Perform inspection every 5 years or when the condenser is opened for service. Transfer the refrigerant into the cooler vessel or into a pumpout storage tank. Remove the float access cover. Clean the chamber and valve assembly thoroughly. Be sure that the valve moves freely. Make sure that all openings are free of obstructions. Examine the cover gasket and replace if necessary. See Fig. 34 for a view of the float valve design. For linear float valve designs, inspect orientation of the float slide pin. It must be pointed toward the bubbler tube for proper operation.

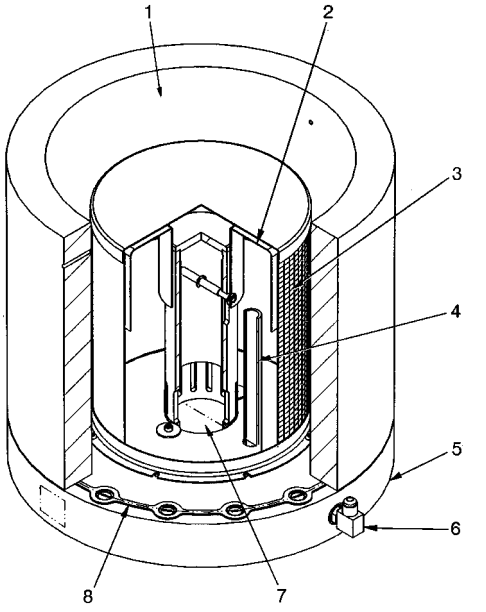

LEGEND

1 — Refrigerant Inlet from FLASC Chamber
2 — Linear Float Assembly
3 — Float Screen
4 — Bubble Line
5 — Float Cover
6 — Bubble Line Connection
7 — Refrigerant Outlet to Cooler
8 — Gasket

Fig. 34 — 19XR Float Valve Design

Inspect Relief Valves and Piping — The relief valves on this chiller protect the system against the potentially dangerous effects of overpressure. To ensure against damage to the equipment and possible injury to personnel, these devices must be kept in peak operating condition.

As a minimum, the following maintenance is required.

1. At least once a year, disconnect the vent piping at the valve outlet and carefully inspect the valve body and mechanism for any evidence of internal corrosion or rust, dirt, scale, leakage, etc.
2. If corrosion or foreign material is found, do not attempt to repair or recondition. *Replace the valve.*
3. If the chiller is installed in a corrosive atmosphere or the relief valves are vented into a corrosive atmosphere, make valve inspections at more frequent intervals.

Compressor Bearing and Gear Maintenance — The key to good bearing and gear maintenance is proper lubrication. Use the proper grade of oil, maintained at recommended level, temperature, and pressure. Inspect the lubrication system regularly and thoroughly.

To inspect the bearings, a complete compressor teardown is required. Only a trained service technician should remove and examine the bearings. The cover plate on older compressor bases was used for factory-test purposes and is not usable for bearing or gear inspection. The bearings and gears should be examined on a scheduled basis for signs of wear. The frequency of examination is determined by the hours of chiller operation, load conditions during operation, and the condition of the oil and the lubrication system. Excessive bearing wear can sometimes be detected through increased vibration or increased bearing temperature. If either symptom appears, contact an experienced and responsible service organization for assistance.

Inspect the Heat Exchanger Tubes

COOLER — Inspect and clean the cooler tubes at the end of the first operating season. Because these tubes have internal ridges, a rotary-type tube cleaning system is necessary to fully clean the tubes. Upon inspection, the tube condition will determine the scheduled frequency for cleaning and will indicate whether water treatment is adequate in the chilled water/brine circuit. Inspect the entering and leaving chilled water temperature sensors for signs of corrosion or scale. Replace the sensor if corroded or remove any scale if found.

CONDENSER — Since this water circuit is usually an open-type system, the tubes may be subject to contamination and scale. Clean the condenser tubes with a rotary tube cleaning system at least once per year and more often if the water is contaminated. Inspect the entering and leaving condenser water sensors for signs of corrosion or scale. Replace the sensor if corroded or remove any scale if found.

Higher than normal condenser pressures, together with the inability to reach full refrigeration load, usually indicate dirty tubes or air in the chiller. If the refrigeration log indicates a rise above normal condenser pressures, check the condenser refrigerant temperature against the leaving condenser water temperature. If this reading is more than what the design difference is supposed to be, then the condenser tubes may be dirty or water flow may be incorrect. Because HFC134-a is a high-pressure refrigerant, air usually does not enter the chiller.

During the tube cleaning process, use brushes especially designed to avoid scraping and scratching the tube wall. Contact your Carrier representative to obtain these brushes. *Do not* use wire brushes.

⚠ CAUTION

Hard scale may require chemical treatment for its prevention or removal. Consult a water treatment specialist for proper treatment.

Water Leaks — Water is indicated during chiller operation by the refrigerant moisture indicator (Fig. 2) on the refrigerant motor cooling line. Water leaks should be repaired immediately.

⚠ CAUTION

Chiller must be dehydrated after repair of water leaks. See Chiller Dehydration section, page 41.

Water Treatment — Untreated or improperly treated water may result in corrosion, scaling, erosion, or algae. The services of a qualified water treatment specialist should be obtained to develop and monitor a treatment program.

⚠ CAUTION

Water must be within design flow limits, clean, and treated to ensure proper chiller performance and reduce the potential of tube damage due to corrosion, scaling, erosion, and algae. Carrier assumes no responsibility for chiller damage resulting from untreated or improperly treated water.

Inspect the Starting Equipment — Before working on any starter, shut off the chiller and open all disconnects supplying power to the starter.

⚠ WARNING

The disconnect on the starter front panel does not de-energize all internal circuits. Open all internal and remote disconnects before servicing the starter.

⚠ WARNING

Never open isolating knife switches while equipment is operating. Electrical arcing can cause serious injury.

Inspect starter contact surfaces for wear or pitting on mechanical-type starters. Do not sandpaper or file silverplated contacts. Follow the starter manufacturer's instructions for contact replacement, lubrication, spare parts ordering, and other maintenance requirements.

Periodically vacuum or blow off accumulated debris on the internal parts with a high-velocity, low-pressure blower.

Power connections on newly installed starters may relax and loosen after a month of operation. Turn power off and retighten. Recheck annually thereafter.

⚠ CAUTION

Loose power connections can cause voltage spikes, overheating, malfunctioning, or failures.

Check Pressure Transducers — Once a year, the pressure transducers should be checked against a pressure gage reading. Check all four transducers: the 2 oil differential pressure transducers, the condenser pressure transducer, and the cooler pressure transducer.

Note the evaporator and condenser pressure readings on the Status01 table on the LID. Attach an accurate set of refrigeration gages to the cooler and condenser Schrader fittings. Compare the two readings. If there is a difference in readings, the transducer can be calibrated, as described in the Troubleshooting Guide section. Oil differential pressure should be zero whenever the compressor is off.

Optional Pumpout System Maintenance — For pumpout unit compressor maintenance details, refer to the 06D, 07D Installation, Start-Up, and Service Instructions.

OPTIONAL PUMPOUT COMPRESSOR OIL CHARGE — Use oil conforming to Carrier specifications for reciprocating compressor usage. Oil requirements are as follows:

ISO Viscosity 68

Carrier Part Number PP23BZ103

The total oil charge, 4.5 pints (2.6 L), consists of 3.5 pints (2.0 L) for the compressor and one additional pint (0.6 L) for the oil separator.

Oil should be visible in one of the compressor sight glasses both during operation and at shutdown. Always check the oil level before operating the compressor. Before adding or changing oil, relieve the refrigerant pressure as follows:

1. Attach a pressure gage to the gage port of either compressor service valve (Fig. 32).
2. Close the suction service valve and open the discharge line to the storage tank or the chiller.
3. Operate the compressor until the crankcase pressure drops to 2 psig (13 kPa).
4. Stop the compressor and isolate the system by closing the discharge service valve.
5. Slowly remove the oil return line connection (Fig. 32). Add oil as required.
6. Replace the connection and reopen the compressor service valves.

OPTIONAL PUMPOUT SAFETY CONTROL SETTINGS (Fig. 35) — The optional pumpout system high-pressure switch opens at 161 psig (1110 kPa) and closes at 130 psig (896 kPa). Check the switch setting by operating the pumpout compressor and slowly throttling the pumpout condenser water.

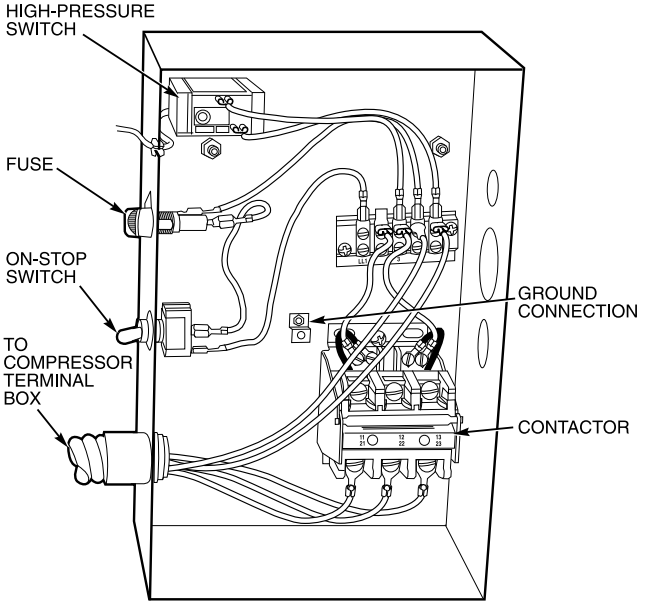

Fig. 35 — Optional Pumpout System Controls

Ordering Replacement Chiller Parts — When ordering Carrier specified parts, the following information must accompany an order:

- chiller model number and serial number
- name, quantity, and part number of the part required
- delivery address and method of shipment.

TROUBLESHOOTING GUIDE

Overview — The PIC has many features to aid the operator and the technician in troubleshooting a 19XR chiller.

- By using the LID display, the chiller actual operating conditions can be viewed while the unit is running.
- When an alarm occurs, the default LID screen will freeze at the time of alarm. The freeze enables the operator to view the chiller conditions at the time of alarm. The Status tables will still show the current information. Once all alarms have been cleared, the default LID screens will return to normal operation.
- The Control Algorithm Status tables will display various screens of information in order to diagnose problems with chilled water temperature control, chilled water temperature control overrides, hot gas bypass, surge algorithm status, and time schedule operation.
- The Control Test feature allows proper operation and test of temperature sensors, pressure transducers, the guide vane actuator, oil pump, water pumps, tower control, and other on/off outputs while the compressor is stopped. It also has the ability to lock off the compressor and turn on water pumps for pumpout operation. The display will show the required temperatures and pressures during these operations.
- Other Service menu tables can access configured items, such as chilled water resets, override set points, etc.
- If an operating fault is detected, an alarm message is generated and displayed on the LID default screen. A more detailed message — along with a diagnostic message — also is stored into the Alarm History table.

Checking the Display Messages — The first area to check when troubleshooting the 19XR is the LID display. If the alarm light is flashing, check the primary and secondary message lines on the LID default screen (Fig. 12). These messages will indicate where the fault is occurring. The Alarm History table on the LID Service menu will also carry an alarm message to further expand on this alarm. For a complete list of messages, see Table 8. If the alarm light starts to flash while accessing a menu screen, depress EXIT to return to the Default screen to read the failure message. The compressor will not run with an alarm condition existing, unless the alarm type is an unauthorized start or a failure to shut down.

Checking Temperature Sensors — All temperature sensors are of the thermistor type. This means that the resistance of the sensor varies with temperature. All sensors have the same resistance characteristics. Determine sensor temperature by measuring voltage drop if the controls are powered on, or resistance if the controls are powered off. Compare the readings to the values listed in Table 9A or 9B.

RESISTANCE CHECK — Turn off the control power and disconnect the terminal plug of the sensor in question from the module. With a digital ohmmeter, measure sensor resistance between receptacles as designated by the wiring diagram. The resistance and corresponding temperature are listed in Table 9A or 9B. Check the resistance of both wires to ground. This resistance should be infinite.

VOLTAGE DROP — Using a digital voltmeter, the voltage drop across any energized sensor can be measured while the control is energized. Table 9A or 9B lists the relationship between temperature and sensor voltage drop (volts dc measured across the energized sensor). Exercise care when measuring voltage to prevent damage to the sensor leads, connector plugs, and modules. Sensors should also be checked at the sensor plugs. Check the sensor wire at the sensor for 5 vdc if the control is powered.

⚠ CAUTION

Relieve all refrigerant pressure or drain the water prior to replacing the temperature sensors.

CHECK SENSOR ACCURACY — Place the sensor in a medium of known temperature and compare that temperature to the measured reading. The thermometer used to determine the temperature of the medium should be of laboratory quality with 0.5° F (.25° C) graduations. The sensor in question should be accurate to within 2° F (1.2° C).

See Fig. 7 for sensor locations. The sensors are immersed directly in the refrigerant or water circuits. The wiring at each sensor is easily disconnected by unlatching the connector. These connectors allow only one-way connection to the sensor. When installing a new sensor, apply a pipe sealant or thread sealant to the sensor threads.

DUAL TEMPERATURE SENSORS — There are 2 sensors each on the bearing and motor temperature sensors for servicing convenience. In case one of the dual sensors is damaged, the other one can be used by moving a wire.

The number 2 terminal in the sensor terminal box is the common line. To use the second sensor, move the wire from the number 1 position to the number 3 position.

Checking Pressure Transducers — There are 4 pressure transducers on the 19XR. They determine cooler, condenser, and oil pressure. The cooler and condenser transducers also are used by the PIC to determine the refrigerant temperatures. The oil supply pressure and the oil transmission sump pressure difference are calculated by a differential pressure/power supply module located in the control center. The PSIO module then reads the differential pressure. In effect, the PSIO only reads one input for oil pressure for a total of 3 pressure inputs: cooler pressure, condenser pressure, and oil differential pressure.

All 3 can be calibrated if necessary. It is not usually necessary to calibrate at initial start-up. However, at high altitude locations, calibration of the transducer will be necessary to ensure the proper refrigerant temperature/pressure relationship. Each transducer is supplied with 5 vdc power from a power supply. If the power supply fails, a transducer voltage reference alarm will occur. If the transducer reading is suspected of being faulty, check the supply voltage. It should be 5 vdc ± .5 v. If the supply voltage is correct, the transducer should be recalibrated or replaced.

COOLER AND CONDENSER PRESSURE CALIBRATION — Calibration can be checked by comparing the pressure readings from the transducer against an accurate refrigeration gage. These readings are all viewed or calibrated from the Status01 table on the LID. The transducer can be checked and calibrated at 2 pressure points. These calibration points are 0 psig (0 kPa) and between 240 and 260 psig (1655 to 1793 kPa). To calibrate these transducers:

1. Shut down the compressor.
2. Disconnect the transducer in question from its Schrader fitting.

   NOTE: If the cooler or condenser vessels are at 0 psig (0 kPa) or are open to atmospheric pressure, the transducers can be calibrated for zero without removing the transducer from the vessel.
3. Access the Status01 table, and view the particular transducer reading; it should read 0 psi (0 kPa). If the reading is not 0 psi (0 kPa), but within ± 5 psi (35 kPa), the value may be zeroed by pressing the SELECT softkey while the highlight bar is located on the transducer, and then by pressing ENTER. The value will now go to zero.

   If the transducer value is not within the calibration range, the transducer will return to the original reading. If the LID pressure value is within the allowed range (noted above), check the voltage ratio of the transducer. To obtain the voltage ratio, divide the voltage (dc) input from the transducer by the supply voltage signal, measured at the PSIO terminals J7-J34 and J7-J35. For example, the condenser transducer voltage input is measured at PSIO terminals J7-1 and J7-2. The voltage ratio must be between 0.80 vdc and 0.11 vdc for the software to allow calibration. Pressurize the transducer until the ratio is within range. Then attempt calibration again.
4. A high pressure point can also be calibrated between 240 and 260 psig (1655 and 1793 kPa) by attaching a regulated 250 psig (1724 kPa) pressure (usually from nitrogen cylinder). The high pressure point can be calibrated by accessing the transducer on the Status01 screen, highlighting the transducer, pressing the SELECT softkey, and then increasing or decreasing the value to the exact pressure on the refrigerant gage. Press ENTER to finish. High altitude locations must compensate the pressure so that the temperature/pressure relationship is correct.

   If the transducer reading returns to the previous value and the pressure is within the allowed range, check the voltage ratio of the transducer. Refer to Step 3 above. The voltage ratio for this high pressure calibration must be between 0.585 and 0.634 vdc to allow calibration. Change the pressure at the transducer until the ratio is within the acceptable range. Then attempt calibrate to the new pressure input.

The PIC will not allow calibration if the transducer is too far out of calibration. A new transducer must be installed and re-calibrated.

OIL DIFFERENTIAL PRESSURE/POWER SUPPLY MODULE CALIBRATION — (See Fig. 36.) The oil reservoir in the 19XR chiller is not common to cooler pressure. Therefore, a comparison of pump output to cooler pressure cannot be used to provide differential oil pressure information. A different method is used.

Oil transmission sump pressure and oil supply pressure are fed to a comparator circuit on a 5V power supply board. The output of this circuit, which represents differential oil pressure, is fed to the PSIO. The oil differential pressure is calibrated to 0 psid (0 kPad) by selecting the oil pressure input on the Service1 screen. Then, with the oil pump turned OFF and the transducers CONNECTED, press the ENTER softkey to zero the point. No high end calibration is needed or possible.

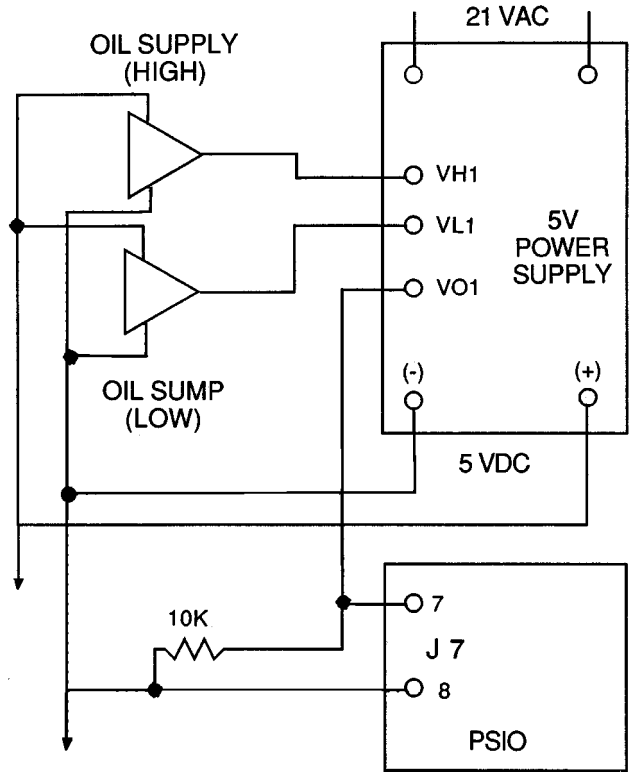

19XR OIL PRESSURE INPUT

LEGEND

J — Connector
VH1 — High-Pressure Transducer Output
VL1 — Low-Pressure Transducer Output
VO1 — (VH1-VL1) + 0.467 ± 0.1V
● Connection
○ Terminal
▷ Transducer

Fig. 36 — Oil Differential Pressure/Power Supply Module

TRANSDUCER REPLACEMENT — Since the transducers are mounted on Schrader-type fittings, there is no need to remove refrigerant from the vessel. Disconnect the transducer wiring by pulling up on the locking tab while pulling up on the weather-tight connecting plug from the end of the transducer. *Do not pull on the transducer wires.* Unscrew the transducer from the Schrader fitting. When installing a new transducer, do not use pipe sealer, which can plug the sensor. Put the plug connector back on the sensor and snap into place. Check for refrigerant leaks.

⚠ WARNING

Make sure to use a back-up wrench on the Schrader fitting whenever removing a transducer, since the Schrader fitting may back out with the transducer, causing a large leak and possible injury to personnel.

Control Algorithms Checkout Procedure — In the LID Service menu, one of the tables is Control Algorithm Status. The maintenance tables may be viewed in order to see how the particular control algorithm is operating.

These maintenance tables are very useful in determining how the control temperature is calculated, guide vane position, reaction from load changes, control point overrides, hot gas bypass reaction, surge prevention, etc. The tables are:

MAINT01	Capacity Control	This table shows all values that are used to calculate the chilled water/brine control point.
MAINT02	Override Status	Details of all chilled water control override values are viewed here.
MAINT03	Surge/ HGBP Status	The surge and hot gas bypass control algorithm status is viewed from this screen. All values dealing with this control are displayed.
MAINT04	LEAD/LAG Status	This screen indicates LEAD/LAG operation status.
OCCDEFM	Time Schedules Status	The Local and CCN occupied schedules are displayed here in a manner that the operator can quickly determine whether the schedule is in the OCCUPIED mode or not.
WSMDEFME	Water System Manager Status	The water system manager is a CCN module which can turn on the chiller and change the chilled water control point. This screen indicates the status of this system.

Control Test — The Control Test feature can check all of the thermistor temperature sensors, including those on the Options modules, pressure transducers, pumps and their associated flow switches, the guide vane actuator, and other control outputs, such as hot gas bypass. The tests can help to determine whether a switch is defective or a pump relay is not operating, among other useful troubleshooting tests. During pumpdown operations, the pumps are energized to prevent freeze-up and the vessel pressures and temperatures are displayed. The lockout feature prevents compressor start-up when no refrigerant is present in the chiller, or if the vessels are isolated. The lockout is then terminated when the operator uses the Terminate Lockout function, after the pumpdown procedure is reversed and refrigerant is added.

LEGEND TO TABLES 8A - 8N

1CR_AUX — Compressor Start Contact
CA_P — Compressor Current
CCN — Carrier Comfort Network
CDFL — Condenser Water Flow
CHIL_S_S — Chiller Start/Stop
CHW — Chilled Water
CHWS — Chilled Water Supply
CHWR — Chilled Water Return
CMPD — Discharge Temperature
CRP — Condenser Refrigerant Pressure
CRT — Condenser Refrigerant Temperature
ECW — Entering Chilled Water
ERT — Evaporator Refrigerant Temperature
EVFL — Chilled Water Flow
GV_TRG — Target Guide Vane Position
LID — Local Interface Device
MTRB — Bearing Temperature
MTRW — Motor Winding Temperature
OILPD — Oil Pressure
OILT — Oil Sump Temperature
PIC — Product Integrated Control
PRS_TRIP — Pressure Trip Contact
PSIO — Processor Sensor Input/Output Module
RLA — Rated Load Amps
RUN_AUX — Compressor Run Contact
SPR_PL — Spare Protective Limit Input
SMM — Starter Management Module
STR_FLT — Starter Fault
TXV — Thermostatic Expansion Valve
V_P — Line Voltage: Percent
V_REF — Voltage Reference

Table 8 — LID Primary and Secondary Messages and Custom Alarm/Alert Messages with Troubleshooting Guides

A. SHUTDOWN WITH ON/OFF/RESET-OFF

PRIMARY MESSAGE	SECONDARY MESSAGE	PROBABLE CAUSE/REMEDY
MANUALLY STOPPED — PRESS	CCN OR LOCAL TO START	PIC in OFF mode, press the CCN or local softkey to start unit.
TERMINATE PUMPDOWN MODE	TO SELECT CCN OR LOCAL	Enter the Control Test table and select Terminate Lockout to unlock compressor.
SHUTDOWN IN PROGRESS	COMPRESSOR UNLOADING	Chiller unloading before shutdown due to Soft Stop feature.
SHUTDOWN IN PROGRESS	COMPRESSOR DEENERGIZED	Chiller compressor is being commanded to stop. Water pumps are deenergized within one minute.
ICE BUILD	OPERATION COMPLETE	Chiller shutdown from Ice Build operation.

B. TIMING OUT OR TIMED OUT

PRIMARY MESSAGE	SECONDARY MESSAGE	PROBABLE CAUSE/REMEDY
READY TO START IN XX MIN	UNOCCUPIED MODE	Time schedule for PIC is unoccupied. Chillers will start only when occupied.
READY TO START IN XX MIN	REMOTE CONTACTS OPEN	Remote contacts have stopped chiller. Close contacts to start.
READY TO START IN XX MIN	STOP COMMAND IN EFFECT	Chiller START/STOP on Status01 manually forced to stop. Release value to start.
READY TO START IN XX MIN	RECYCLE RESTART PENDING	Chiller in recycle mode.
READY TO START	UNOCCUPIED MODE	Time schedule for PIC is UNOCCUPIED. Chiller will start when occupied. Make sure the time and date have been set on the Service menu.
READY TO START	REMOTE CONTACTS OPEN	Remote contacts have stopped chiller. Close contacts to start.
READY TO START	STOP COMMAND IN EFFECT	Chiller START/STOP on Status01 manually forced to stop. Release value to start.
READY TO START IN XX MIN	REMOTE CONTACTS CLOSED	Chiller timer counting down unit. Ready for start.
READY TO START IN XX MIN	OCCUPIED MODE	Chiller timer counting down unit. Ready for start.
READY TO START	REMOTE CONTACTS CLOSED	Chiller timers complete, unit start will commence.
READY TO START	OCCUPIED MODE	Chiller timers complete, unit start will commence.
STARTUP INHIBITED	LOADSHED IN EFFECT	CCN loadshed module commanding chiller to stop.
READY TO START IN XX MIN	START COMMAND IN EFFECT	Chiller START/STOP on Status01 has been manually forced to start. Chiller will start regardless of time schedule or remote contact status.

C. IN RECYCLE SHUTDOWN

PRIMARY MESSAGE	SECONDARY MESSAGE	PROBABLE CAUSE/REMEDY
RECYCLE RESTART PENDING	OCCUPIED MODE	Unit in recycle mode, chilled water temperature is not high enough to start.
RECYCLE RESTART PENDING	REMOTE CONTACT CLOSED	Unit in recycle mode, chilled water temperature is not high enough to start.
RECYCLE RESTART PENDING	START COMMAND IN EFFECT	Chiller START/STOP on Status01 manually forced to start, chill water temperature is not high enough to start.
RECYCLE RESTART PENDING	ICE BUILD MODE	Chiller in ICE BUILD mode. Chilled Water/Brine Temperature is satisfied for Ice Build Setpoint temperature.

Table 8 — LID Primary and Secondary Messages and Custom Alarm/Alert Messages with Troubleshooting Guides (cont)

D. PRE-START ALERTS: These alerts only delay start-up. When alert is corrected, the start-up will continue. No reset is necessary.

PRIMARY MESSAGE	SECONDARY MESSAGE	ALARM MESSAGE/PRIMARY CAUSE	ADDITIONAL CAUSE/REMEDY
PRESTART ALERT	STARTS LIMIT EXCEEDED	STARTS EXCESSIVE Compressor Starts (8 in 12 hours)	Depress the RESET softkey if additional start is required. Reassess start-up requirements.
PRESTART ALERT	HIGH MOTOR TEMPERATURE	MTRW [VALUE] exceeded limit of [LIMIT]*. Check motor temperature.	Check motor cooling line for proper operation. Check for excessive starts within a short time span.
PRESTART ALERT	HIGH BEARING TEMPERATURE	MTRB [VALUE] exceeded limit of [LIMIT]*. Check thrust bearing temperature.	Check oil heater for proper operation, check for low oil level, partially closed oil supply valves, etc. Check sensor accuracy.
PRESTART ALERT	HIGH DISCHARGE TEMP	CMPD [VALUE] exceeded limit of [LIMIT]*. Check discharge temperature.	Check sensor accuracy. Allow discharge temperature to cool. Check for excessive starts.
PRESTART ALERT	LOW REFRIGERANT TEMP	ERT [VALUE] exceeded limit of [LIMIT]*. Check refrigerant temperature.	Check transducer accuracy. Check for low chilled water/brine supply temperature.
PRESTART ALERT	LOW OIL TEMPERATURE	OILT [VALUE] exceeded limit of [LIMIT]*. Check oil temperature.	Check oil heater power, oil heater relay. Check oil level.
PRESTART ALERT	LOW LINE VOLTAGE	V__ P [VALUE] exceeded limit of [LIMIT]*. Check voltage suppy.	Check voltage supply. Check voltage transformers. Consult power utility if voltage is low. Adjust voltage potentiometer in starter for SMM voltage input.
PRESTART ALERT	HIGH LINE VOLTAGE	V__ P [VALUE] exceeded limit of [LIMIT]*. Check voltage supply.	Check voltage supply. Check voltage transformers. Consult power utility if voltage is low. Adjust voltage potentiometer in starter for SMM voltage input.
PRESTART ALERT	HIGH CONDENSER PRESSURE	CRP [VALUE] exceeded limit of [LIMIT]*. Check condenser water and transducer.	Check for high condenser water temperature. Check transducer accuracy.

*[LIMIT] is shown on the LID as temperature, pressure, voltage, etc., predefined or selected by the operator as an override or an alert. [VALUE] is the actual pressure, temperature, voltage, etc., at which the control tripped.

E. NORMAL OR AUTO.-RESTART

PRIMARY MESSAGE	SECONDARY MESSAGE	PROBABLE CAUSE/REMEDY
STARTUP IN PROGRESS	OCCUPIED MODE	Chiller starting. Time schedule is occupied.
STARTUP IN PROGRESS	REMOTE CONTACT CLOSED	Chiller starting. Remote contacts are closed.
STARTUP IN PROGRESS	START COMMAND IN EFFECT	Chiller starting. Chiller START/STOP on Status01 manually forced to start.
AUTORESTART IN PROGRESS	OCCUPIED MODE	Chiller starting. Time schedule is occupied.
AUTORESTART IN PROGRESS	REMOTE CONTACT CLOSED	Chiller starting. Remote contacts are closed.
AUTORESTART IN PROGRESS	START COMMAND IN EFFECT	Chiller starting. Chiller START/STOP on Status01 manually forced to start.

Table 8 — LID Primary and Secondary Messages and Custom Alarm/Alert Messages with Troubleshooting Guides (cont)

F. START-UP FAILURES: This is an alarm condition. A manual reset is required to clear.

PRIMARY MESSAGE	SECONDARY MESSAGE	ALARM MESSAGE/PRIMARY CAUSE	ADDITIONAL CAUSE/REMEDY
FAILURE TO START	LOW OIL PRESSURE	OILPD [VALUE] exceeded limit of [LIMIT]*. Check oil pump system.	Check for closed oil supply valves. Check oil filter. Check for low oil temperature. Check transducer accuracy.
FAILURE TO START	OIL PRESS SENSOR FAULT	OILPD [VALUE] exceeded limit of [LIMIT]*. Check oil pressure sensor.	Check for excessive refrigerant in oil sump. Run oil pump manually for 5 minutes. Check transducer calibration. Check cooler pressure transducer calibration. Check wiring. Replace transducer if necessary.
FAILURE TO START	LOW CHILLED WATER FLOW	EVFL Evap Flow Fault: Check water pump/flow switch.	Check wiring to flow switch. Check through Control Test for proper switch operation.
FAILURE TO START	LOW CONDENSER WATER FLOW	CDFL Cond. Flow Fault: Check water pump/flow switch.	Check wiring to flow switch. Check through Control Test for proper switch operation.
FAILURE TO START	STARTER FAULT	STR__FLT Starter Fault: Check Starter for Fault Source.	A starter protective device has faulted. Check starter for ground fault, voltage trip, temperature trip, etc.
FAILURE TO START	STARTER OVERLOAD TRIP	STR__FLT Starter Overload Trip: Check amps calibration/reset overload.	Reset overloads before restart.
FAILURE TO START	LINE VOLTAGE DROPOUT	V__P Single-Cycle Dropout Detected: Check voltage supply. Check power monitor in starter.	Check voltage supply. Check transformers for supply. Check with utility if voltage supply is erratic. Monitor must be installed to confirm consistent, single-cycle dropouts. Check low oil pressure switch.
FAILURE TO START	HIGH CONDENSER PRESSURE	High Condenser Pressure [LIMIT]*. Check switch and water temperature/flow.	Check for proper design condenser flow and temperature. Check condenser approach. Check high pressure switch.
FAILURE TO START	EXCESS ACCELERATION TIME	CA__P Excess Acceleration: Check guide vane closure at start-up.	Check that guide vanes are closed at start-up. Check starter for proper operation. Reduce unit pressure if possible.
FAILURE TO START	STARTER TRANSITION FAULT	RUN__AUX Starter Transition Fault: Check 1CR/1M/Interlock mechanism.	Check starter for proper operation. Run contact failed to close.
FAILURE TO START	1CR AUX CONTACT FAULT	1CR__AUX Starter Contact Fault: Check 1CR/1M aux. contacts.	Check starter for proper operation. Start contact failed to close.
FAILURE TO START	MOTOR AMPS NOT SENSED	CA__P Motor Amps Not Sensed: Check motor load signal; close disconnect switch.	Check for proper motor amps signal to SMM. Check wiring from SMM to current transformer. Check main motor circuit breaker for trip.
FAILURE TO START	LOW OIL PRESSURE	Low Oil Pressure [LIMIT]*. Check oil pressure switch/pump. Check SMM voltage output to ICR relay.	The oil pressure differential switch is open when the compressor tried to START. Check the switch for proper operation. Also, check the oil pump interlock (2C aux) in the power panel and the high condenser pressure switch.

*[LIMIT] is shown on the LID as the temperature, pressure, voltage, etc., set point predefined or selected by the operator as an override, alert, or alarm condition. [VALUE] is the actual pressure, temperature, voltage, etc., at which the control tripped.

G. COMPRESSOR JUMPSTART AND REFRIGERANT PROTECTION

PRIMARY MESSAGE	SECONDARY MESSAGE	ALARM MESSAGE/PRIMARY CAUSE	ADDITIONAL CAUSE/REMEDY
UNAUTHORIZED OPERATION	UNIT SHOULD BE STOPPED	CA__P Emergency: Compressor running without control authorization.	Compressor is running with more than 10% RLA and control is trying to shut it down. Throw power off to compressor if unable to stop. Determine cause before repowering.
POTENTIAL FREEZE-UP	EVAP PRESS/TEMP TOO LOW	ERT Emergency: Freeze-up prevention.	Determine cause. If pumping refrigerant out of chiller, stop operation and go over pumpout procedures.
FAILURE TO STOP	DISCONNECT POWER	RUN__AUX Emergency: DISCONNECT POWER.	Starter and run and start contacts are energized while control tried to shut down. Disconnect power to starter.
LOSS OF COMMUNCIATION	WITH STARTER	Loss of Communication with Starter: Check chiller.	Check wiring from PSIO to SMM. Check SMM module troubleshooting procedures.
STARTER CONTACT FAULT	ABNORMAL 1CR OR RUN AUX	1CR__AUX Starter Contact Fault: Check 1CR/1M aux. contacts.	Starter run and start contacts energized while chiller was off. Disconnect power.
POTENTIAL FREEZE UP	COND PRESS/TEMP TOO LOW	CRT Emergency: Freeze-up prevention.	The condenser pressure transducer is reading a pressure that could freeze the water in the condenser tubes. Check for condenser refrigerant leaks, bad transducers, or transferred refrigerant. Place the unit in Pumpdown mode to eliminate ALARM if vessel is evacuated.

*[LIMIT] is shown on the LID as the temperature, pressure, voltage, etc., set point predefined or selected by the operator as an override, alert, or alarm condition. [VALUE] is the actual pressure, temperature, voltage, etc., at which the control tripped.

Table 8 — LID Primary and Secondary Messages and Custom Alarm/Alert Messages with Troubleshooting Guides (cont)

H. NORMAL RUN WITH RESET, TEMPERATURE, OR DEMAND

PRIMARY MESSAGE	SECONDARY MESSAGE	PROBABLE CAUSE/REMEDY
RUNNING — RESET ACTIVE	4-20MA SIGNAL	Reset program active based upon Config table setup.
RUNNING — RESET ACTIVE	REMOTE SENSOR CONTROL	
RUNNING — RESET ACTIVE	CHW TEMP DIFFERENCE	
RUNNING — TEMP CONTROL	LEAVING CHILLED WATER	Default method of temperature control.
RUNNING — TEMP CONTROL	ENTERING CHILLED WATER	ECW control activated on Config table.
RUNNING — TEMP CONTROL	TEMPERATURE RAMP LOADING	Ramp loading in effect. Use Service1 table to modify.
RUNNING — DEMAND LIMITED	BY DEMAND RAMP LOADING	Ramp loading in effect. Use Service1 table to modify.
RUNNING — DEMAND LIMITED	BY LOCAL DEMAND SET POINT	Demand limit set point is < actual demand.
RUNNING — DEMAND LIMITED	BY 4-20MA SIGNAL	Demand limit is active based on Config table setup.
RUNNING — DEMAND LIMITED	BY CCN SIGNAL	
RUNNING — DEMAND LIMITED	BY LOADSHED/REDLINE	
RUNNING — TEMP CONTROL	HOT GAS BYPASS	Hot Gas Bypass is energized. See surge prevention in the control section.
RUNNING — DEMAND LIMITED	BY LOCAL SIGNAL	Active demand limit manually overridden or Status01 table.
RUNNING — TEMP CONTROL	ICE BUILD MODE	Chiller is running under Ice Build temperature control.

I. NORMAL RUN OVERRIDES ACTIVE (ALERTS)

PRIMARY MESSAGE	SECONDARY MESSAGE	ALARM MESSAGE/PRIMARY CAUSE	ADDITIONAL CAUSE/REMEDY
RUN CAPACITY LIMITED	HIGH CONDENSER PRESSURE	CRP [VALUE]* exceeded limit of [LIMIT]*. Condenser pressure override.	See Capacity Overrides, Table 4. Correct operating condition, modify set point, or release override.
RUN CAPACITY LIMITED	HIGH MOTOR TEMPERATURE	MTRW [VALUE]* exceeded limit of [LIMIT]*. Motor temperature override.	
RUN CAPACITY LIMITED	LOW EVAP REFRIG TEMP	ERT [VALUE]* exceeded limit of [LIMIT]*. Check refrigerant charge level.	
RUN CAPACITY LIMITED	HIGH COMPRESSOR LIFT	Surge Prevention Override; lift too high for compressor.	
RUN CAPACITY LIMITED	MANUAL GUIDE VANE TARGET	GV__TRG Run Capacity Limited: Manual guide vane target.	

*[LIMIT] is shown on the LID as the temperature, pressure, voltage, etc., set point predefined or selected by the operator as an override, alert, or alarm condition. [VALUE] is the actual temperature, pressure, voltage, etc., at which the control tripped.

J. OUT-OF-RANGE SENSOR FAILURES

PRIMARY MESSAGE	SECONDARY MESSAGE	ALARM MESSAGE/PRIMARY CAUSE	ADDITIONAL CAUSE/REMEDY
SENSOR FAULT	LEAVING CHW TEMPERATURE	Sensor Fault: Check leaving CHW sensor.	See sensor test procedure and check sensors for proper operation and wiring.
SENSOR FAULT	ENTERING CHW TEMPERATURE	Sensor Fault: Check entering CHW sensor.	
SENSOR FAULT	CONDENSER PRESSURE	Sensor Fault: Check condenser pressure transducer.	
SENSOR FAULT	EVAPORATOR PRESSURE	Sensor Fault: Check evaporator pressure transducer.	
SENSOR FAULT	BEARING TEMPERATURE	Sensor Fault: Check bearing temperature sensor.	
SENSOR FAULT	MOTOR WINDING TEMP	Sensor Fault: Check motor temperature sensor.	
SENSOR FAULT	DISCHARGE TEMPERATURE	Sensor Fault: Check discharge temperature sensor.	
SENSOR FAULT	OIL SUMP TEMPERATURE	Sensor Fault: Check oil sump temperature sensor.	
SENSOR FAULT	OIL PRESSURE	Sensor Fault: Check oil pressure transducer.	

Table 8 — LID Primary and Secondary Messages and Custom Alarm/Alert Messages with Troubleshooting Guides (cont)

K. CHILLER PROTECT LIMIT FAULTS

⚠ WARNING

Excessive numbers of the same fault can lead to severe chiller damage. Seek service expertise.

PRIMARY MESSAGE	SECONDARY MESSAGE	ALARM MESSAGE/PRIMARY CAUSE	ADDITIONAL CAUSE/REMEDY
PROTECTIVE LIMIT	HIGH DISCHARGE TEMP	CMPD [VALUE] exceeded limit of [LIMIT]*. Check discharge temperature.	Check discharge temperature immediately. Check sensor for accuracy; check for proper condenser flow and temperature; check oil reservoir temperature. Check condenser for fouled tubes or air in chiller. Check for proper guide vane actuator operation.
PROTECTIVE LIMIT	LOW REFRIGERANT TEMP	ERT [VALUE] exceeed limit of [LIMIT]*. Check evap pump and flow switch.	Check for proper amount of refrigerant charge; check for proper water flow and temperatures. Check for proper guide vane actuator operation.
PROTECTIVE LIMIT	HIGH MOTOR TEMPERATURE	MTRW [VALUE] exceeded limit of [LIMIT]*. Check motor cooling and solenoid.	Check motor temperature immediately. Check sensor for accuracy. Check for proper condenser flow and temperature. Check motor cooling system for restrictions. Check motor cooling solenoid for proper operation. Check refrigerant filter.
PROTECTIVE LIMIT	HIGH BEARING TEMPERATURE	MTRB [VALUE] exceeded limit of [LIMIT]*. Check oil cooling control.	Check for throttled oil supply isolation valves. Valves should be wide open. Check oil cooler thermal expansion valve. Check sensor accuracy. Check journal and thrust bearings. Check refrigerant filter. Check for excessive oil sump level.
PROTECTIVE LIMIT	LOW OIL PRESSURE	OILPD [VALUE] exceeded limit of [LIMIT]*. Check oil pump and transducer.	Check power to oil pump and oil level. Check for dirty filters or oil foaming at start-up. Check for thermal overload cutout. Reduce ramp load rate if foaming noted. NOTE: This alarm is not related to pressure switch problems.
		Low Oil Pressure [OPEN]*. Check oil pressure switch/pump and 2C aux.	Check the oil pressure switch for proper operation. Check oil pump for proper pressure. Check for excessive refrigerant in oil system.
PROTECTIVE LIMIT	NO MOTOR CURRENT	CA__P Loss of Motor Current: Check sensor.	Check wiring: Check torque setting on solid-state starter. Check for main circuit breaker trip. Check power supply to PSIO module.
PROTECTIVE LIMIT	POWER LOSS	V__P Power Loss: Check voltage supply.	Check 24-vdc input sensor on the SMM; adjust potentiometer if necessary. Check transformers to SMM. Check power to PSIO module. Check distribution bus. Consult power company.
PROTECTIVE LIMIT	LOW LINE VOLTAGE	V__P [VALUE] exceeded limit of [LIMIT]*. Check voltage supply.	
PROTECTIVE LIMIT	HIGH LINE VOLTAGE	V__P [VALUE] exceeded limit of [LIMIT]*. Check voltage supply.	
PROTECTIVE LIMIT	LOW CHILLED WATER FLOW	EVFL Flow Fault: Check evap pump/flow switch.	Perform pumps Control Test and verify proper switch operation. Check all water valves and pump operation.
PROTECTIVE LIMIT	LOW CONDENSER WATER FLOW	CDFL Flow Fault: Check cond pump/flow switch.	
PROTECTIVE LIMIT	HIGH CONDENSER PRESSURE	High Cond Pressure [OPEN]*. Check switch, oil pressure contact, and water temp/flow.	Check the high-pressure switch. Check for proper condenser pressures and condenser waterflow. Check for fouled tubes. Check the 2C aux. contact and the oil pressure switch in the power panel. This alarm is not caused by the transducer.
		High Cond Pressure [VALUE]: Check switch, water flow, and transducer.	Check water flow in condenser. Check for fouled tubes. Transducer should be checked for accuracy. This alarm is not caused by the high pressure switch.
PROTECTIVE LIMIT	1CR AUX CONTACT FAULT	CR__AUX Starter Contact Fault: Check 1CR/1M aux contacts.	1CR auxiliary contact opened while chiller was running. Check starter for proper operation.
PROTECTIVE LIMIT	RUN AUX CONTACT FAULT	RUN__AUX Starter Contact Fault: Check 1CR/1M aux contacts.	Run auxiliary contact opened while chiller was running. Check starter for proper operation.
PROTECTIVE LIMIT	CCN OVERRIDE STOP	CHIL__S__S CCN Override Stop while in LOCAL run mode.	CCN has signaled chiller to stop. Reset and restart when ready. If the signal was sent by the LID, release the Stop signal on STATUS01 table.
PROTECTIVE LIMIT	SPARE SAFETY DEVICE	SRP__PL Spare Safety Fault: Check contacts.	Spare safety input has tripped or factory-installed jumper not present.
PROTECTIVE LIMIT	EXCESSIVE MOTOR AMPS	CA__P [VALUE] exceeded limit of [LIMIT]*. High Amps; Check guide vane drive.	Check motor current for proper calibration. Check guide vane drive and actuator for proper operation.
PROTECTIVE LIMIT	EXCESSIVE COMPR SURGE	Compressor Surge: Check condenser water temp and flow.	Check condenser flow and temperatures. Check configuration of surge protection.
PROTECTIVE LIMIT	STARTER FAULT	STR__FLT Starter Fault: Check starter for fault source.	Check starter for possible ground fault, reverse rotation, voltage trip, etc.
PROTECTIVE LIMIT	STARTER OVERLOAD TRIP	STR__FLT Starter Overload Trip: Check amps calibration/reset overload.	Reset overloads and reset alarm. Check motor current calibration or overload calibration (do not field-calibrate overloads).
PROTECTIVE LIMIT	TRANSDUCER VOLTAGE FAULT	V__REF [VALUE] exceeded limit of [LIMIT]*. Check transducer power supply.	Check transformer power (5 vdc) supply to transducers. Power must be 4.5 to 5.5 vdc.

*[LIMIT] is shown on the LID as the temperature, pressure, voltage, etc., set point predefined or selected by the operator as an override, alert, or alarm condition. [VALUE] is the actual temperature, pressure, voltage, etc., at which the control tripped. [OPEN] indicates that an input circuit is open.

Table 8 — LID Primary and Secondary Messages and Custom Alarm/Alert Messages with Troubleshooting Guides (cont)

L. CHILLER ALERTS

PRIMARY MESSAGE	SECONDARY MESSAGE	ALARM MESSAGE/PRIMARY CAUSE	ADDITIONAL CAUSE/REMEDY
RECYCLE ALERT	HIGH AMPS AT SHUTDOWN	High Amps at Recycle: Check guide vane drive.	Check that guide vanes are closing. Check motor amps correction calibration is correct. Check actuator for proper operation.
SENSOR FAULT ALERT	LEAVING COND WATER TEMP	Sensor Fault: Check leaving condenser water sensor.	Check sensor. See sensor test procedure.
SENSOR FAULT ALERT	ENTERING COND WATER TEMP	Sensor Fault: Check entering condenser water sensor.	
LOW OIL PRESSURE ALERT	CHECK OIL FILTER	Low Oil Pressure Alert: Check oil	Check oil filter. Check for improper oil level or temperature.
AUTORESTART PENDING	POWER LOSS	V__P Power Loss: Check voltage supply.	Check power supply if there are excessive compressor starts occurring.
AUTORESTART PENDING	LOW LINE VOLTAGE	V__P [VALUE] exceeded limit of [LIMIT]*. Check voltage supply.	
AUTORESTART PENDING	HIGH LINE VOLTAGE	V__P [VALUE] exceeded limit of [LIMIT*]. Check voltage supply.	
SENSOR ALERT	HIGH DISCHARGE TEMP	CMPD [VALUE] exceeded limit of [LIMIT]*. Check discharge temperature.	Discharge temperature exceeded the alert threshold. Check entering condenser water temperature.
SENSOR ALERT	HIGH BEARING TEMPERATURE	MTRB [VALUE] exceeded limit of [LIMIT]*. Check thrust bearing temperature.	Thrust bearing temperature exceeded the alert threshold. Check for closed valves, improper oil level or temperatures.
CONDENSER PRESSURE ALERT	PUMP RELAY ENERGIZED	CRP High Condenser Pressure [LIMIT]*. Pump energized to reduce pressure.	Check ambient conditions. Check condenser pressure for accuracy.
RECYCLE ALERT	EXCESSIVE RECYCLE STARTS	Excessive recycle starts.	The chiller load is too small to keep the chiller on line and there have been more than 5 restarts in 4 hours. Increase chiller load, adjust hot gas bypass, increase RECYCLE RESTART DELTA T.

*[LIMIT] is shown on the LID as the temperature, pressure, voltage, etc., set point predefined or selected by the operator as an override, alert, or alarm condition. [VALUE] is the actual temperature, pressure, voltage, etc., at which the control tripped.

M. SPARE SENSOR ALERT MESSAGES

PRIMARY MESSAGE	SECONDARY MESSAGE	ALARM MESSAGE/PRIMARY CAUSE	ADDITIONAL CAUSE/REMEDY
SPARE SENSOR ALERT	COMMON CHWS SENSOR	Sensor Fault: Check common CHWS sensor.	Check alert temperature set points on Equipment Service, SERVICE2 LID table. Check sensor for accuracy if reading is not accurate.
SPARE SENSOR ALERT	COMMON CHWR SENSOR	Sensor Fault: Check common CHWR sensor.	
SPARE SENSOR ALERT	REMOTE RESET SENSOR	Sensor Fault: Check remote reset temperature sensor.	
SPARE SENSOR ALERT	TEMP SENSOR — SPARE 1	Sensor Fault: Check temperature sensor — Spare 1.	
SPARE SENSOR ALERT	TEMP SENSOR — SPARE 2	Sensor Fault: Check temperature sensor — Spare 2.	
SPARE SENSOR ALERT	TEMP SENSOR — SPARE 3	Sensor Fault: Check temperature sensor — Spare 3.	
SPARE SENSOR ALERT	TEMP SENSOR — SPARE 4	Sensor Fault: Check temperature sensor — Spare 4.	
SPARE SENSOR ALERT	TEMP SENSOR — SPARE 5	Sensor Fault: Check temperature sensor — Spare 5.	
SPARE SENSOR ALERT	TEMP SENSOR — SPARE 6	Sensor Fault: Check temperature sensor — Spare 6.	
SPARE SENSOR ALERT	TEMP SENSOR — SPARE 7	Sensor Fault: Check temperature sensor — Spare 7.	
SPARE SENSOR ALERT	TEMP SENSOR — SPARE 8	Sensor Fault: Check temperature sensor — Spare 8.	
SPARE SENSOR ALERT	TEMP SENSOR — SPARE 9	Sensor Fault: Check temperature sensor — Spare 9.	

Table 8 — LID Primary and Secondary Messages and Custom Alarm/Alert Messages with Troubleshooting Guides (cont)

N. OTHER PROBLEMS/MALFUNCTIONS

DESCRIPTION/MALFUNCTION	PROBABLE CAUSE/REMEDY
Chilled Water/Brine Temperature Too High (Chiller Running)	Chilled water set point set too high. Access set point on LID and verify. Capacity override or excessive cooling load (chiller at design capacity). Check LID status messages. Check for outside air infiltration into conditioned space. Condenser temperature too high. Check for proper flow, examine cooling tower operation, check for air or water leaks, check for fouled tubes. Refrigerant level low. Check for leaks, add refrigerant, and trim charge. Liquid bypass in waterbox. Examine division plates and gaskets for leaks. Guide vanes fail to open. Use Control Test to check operation. Chilled water control point too high. Access control algorithm status and check chilled water control operation. Guide vanes fail to open fully. Be sure that the guide vane target is released. Check guide vane linkage. Check limit switch in actuator. Check that sensor is in the proper terminals.
Chilled Water/Brine Temperature Too Low (Chiller Running)	Chilled water set point set too low. Access set point on LID and verify. Chilled water control point too low. Access control algorithm status and check chilled water control for proper resets. High discharge temperature keeps guide vanes open. Guide vanes fail to close. Be sure that guide vane target is released. Check chilled water sensor accuracy. Check guide vane linkage. Check actuator operation.
Chilled Water Temperature Fluctuates. Vanes Hunt	Deadband too narrow. Configure LID for a larger deadband. Proportional bands too narrow. Either INC or DEC proportional bands should be increased. Loose guide vane drive. Adjust chain drive. Defective vane actuator. Check through Control Test. Defective temperature sensor. Check sensor accuracy.
Low Oil Sump Temperature While Running (Less than 100 F [38 C])	Check for proper oil level (not enough oil). Check for proper refrigerant level (too much refrigerant).
At Power Up, Default Screen Does Not Appear, "Tables Loading" Message Continually Appears	Check for proper communications wiring on PSIO module. Check that the COMM1 communications wires from the LID are terminated to the COMM1 PSIO connection.
SMM Communications Failure	Check that PSIO communication plugs are connected correctly. Check SMM communication plug. Check for proper SMM power supply. See Control Modules section on page 71.
High Oil Temperature While Running	Check for proper oil level (too much oil). Check that TXV valve is operating properly.
Blank LID Screen	Increase contrast potentiometer. See Fig. 38. Check red LED on LID for proper operation, (power supply). If LED is blinking, but green LED's are not, replace LID module, (memory failure)
"Communications Failure" Highlighted Message At Bottom of LID Screen	LID is not properly addressed to the PSIO. Make sure that "Attach to Network Device," "Local Device" is set to read the PSIO address. Check LED's on PSIO. Is red LED operating properly? Are green LED's blinking? See control module troubleshooting section.
Controls Test Disabled	Press the "Stop" pushbutton. The PIC must be in the OFF mode for the controls test to operate. Clear all alarms. Check line voltage percent on Status01 screen. The percent must be within 90% to 110%. Check voltage input to SMM, calibrate starter voltage potentiometer for accuracy.
Vanes Will Not Open In Control Test	Low pressure alarm is active. Put chiller into pumpdown mode or equalize pressure. Check guide vane actuator wiring.
Oil Pump Does Not Run	Check oil pump voltage supply. Cooler vessel pressure under vacuum. Pressurize vessel. Check temperature overload cutout switch.
LID Default Screen Does Not Update	This is normal operation when an alarm condition exists. The LID screen freezes the moment the alarm occurs to aid in troubleshooting. Go to the STATUS01 screen to view current information.
Chiller Does Not Stop When STOP Button is Pressed	The STOP button wiring connector at the LID module is not properly connected, or the chiller is in the SOFT STOP mode and the guide vanes are closing.
LID Screen is Dark	Light bulb is burned out. Replace.

Table 9A — Thermistor Temperature (F) vs Resistance/Voltage Drop

TEMPERATURE (F)	VOLTAGE DROP (V)	RESISTANCE (Ohms)
−25	4.821	98,010
−24	4.818	94,707
−23	4.814	91,522
−22	4.806	88,449
−21	4.800	85,486
−20	4.793	82,627
−19	4.786	79,871
−18	4.779	77,212
−17	4.772	74,648
−16	4.764	72,175
−15	4.757	69,790
−14	4.749	67,490
−13	4.740	65,272
−12	4.734	63,133
−11	4.724	61,070
−10	4.715	59,081
−9	4.705	57,162
−8	4.696	55,311
−7	4.688	53,526
−6	4.676	51,804
−5	4.666	50,143
−4	4.657	48,541
−3	4.648	46,996
−2	4.636	45,505
−1	4.624	44,066
0	4.613	42,679
1	4.602	41,339
2	4.592	40,047
3	4.579	38,800
4	4.567	37,596
5	4.554	36,435
6	4.540	35,313
7	4.527	34,231
8	4.514	33,185
9	4.501	32,176
10	4.487	31,202
11	4.472	30,260
12	4.457	29,351
13	4.442	28,473
14	4.427	27,624
15	4.413	26,804
16	4.397	26,011
17	4.381	25,245
18	4.366	24,505
19	4.348	23,789
20	4.330	23,096
21	4.313	22,427
22	4.295	21,779
23	4.278	21,153
24	4.258	20,547
25	4.241	19,960
26	4.223	19,393
27	4.202	18,843
28	4.184	18,311
29	4.165	17,796
30	4.145	17,297
31	4.125	16,814
32	4.103	16,346
33	4.082	15,892
34	4.059	15,453
35	4.037	15,027
36	4.017	14,614
37	3.994	14,214
38	3.968	13,826
39	3.948	13,449
40	3.927	13,084
41	3.902	12,730
42	3.878	12,387
43	3.854	12,053
44	3.828	11,730
45	3.805	11,416
46	3.781	11,112
47	3.757	10,816
48	3.729	10,529
49	3.705	10,250
50	3.679	9,979
51	3.653	9,717
52	3.627	9,461
53	3.600	9,213
54	3.575	8,973
55	3.547	8,739
56	3.520	8,511
57	3.493	8,291
58	3.464	8,076
59	3.437	7,868
60	3.409	7,665
61	3.382	7,468
62	3.353	7,277
63	3.323	7,091
64	3.295	6,911
65	3.267	6,735
66	3.238	6,564
67	3.210	6,399
68	3.181	6,238
69	3.152	6,081
70	3.123	5,929
71	3.093	5,781
72	3.064	5,637
73	3.034	5,497
74	3.005	5,361
75	2.977	5,229
76	2.947	5,101
77	2.917	4,976
78	2.884	4,855
79	2.857	4,737
80	2.827	4,622
81	2.797	4,511
82	2.766	4,403
83	2.738	4,298
84	2.708	4,196
85	2.679	4,096
86	2.650	4,000
87	2.622	3,906
88	2.593	3,814
89	2.563	3,726
90	2.533	3,640
91	2.505	3,556
92	2.476	3,474
93	2.447	3,395
94	2.417	3,318
95	2.388	3,243
96	2.360	3,170
97	2.332	3,099
98	2.305	3,031
99	2.277	2,964
100	2.251	2,898
101	2.217	2,835
102	2.189	2,773
103	2.162	2,713
104	2.136	2,655
105	2.107	2,597
106	2.080	2,542
107	2.053	2,488
108	2.028	2,436
109	2.001	2,385
110	1.973	2,335
111	1.946	2,286
112	1.919	2,239
113	1.897	2,192
114	1.870	2,147
115	1.846	2,103
116	1.822	2,060
117	1.792	2,018
118	1.771	1,977
119	1.748	1,937
120	1.724	1,898
121	1.702	1,860
122	1.676	1,822
123	1.653	1,786
124	1.630	1,750
125	1.607	1,715
126	1.585	1,680
127	1.562	1,647
128	1.538	1,614
129	1.517	1,582
130	1.496	1,550
131	1.474	1,519
132	1.453	1,489
133	1.431	1,459
134	1.408	1,430
135	1.389	1,401
136	1.369	1,373
137	1.348	1,345
138	1.327	1,318
139	1.308	1,291
140	1.291	1,265
141	1.289	1,240
142	1.269	1,214
143	1.250	1,190
144	1.230	1,165
145	1.211	1,141
146	1.192	1,118
147	1.173	1,095
148	1.155	1,072
149	1.136	1,050
150	1.118	1,029
151	1.100	1,007
152	1.082	986
153	1.064	965
154	1.047	945
155	1.029	925
156	1.012	906
157	0.995	887
158	0.978	868
159	0.962	850
160	0.945	832
161	0.929	815
162	0.914	798
163	0.898	782
164	0.883	765
165	0.868	750
166	0.853	734
167	0.838	719
168	0.824	705
169	0.810	690
170	0.797	677
171	0.783	663
172	0.770	650
173	0.758	638
174	0.745	626
175	0.734	614
176	0.722	602
177	0.710	591
178	0.700	581
179	0.689	570
180	0.678	561
181	0.668	551
182	0.659	542
183	0.649	533
184	0.640	524
185	0.632	516
186	0.623	508
187	0.615	501
188	0.607	494
189	0.600	487
190	0.592	480
191	0.585	473
192	0.579	467
193	0.572	461
194	0.566	456
195	0.560	450
196	0.554	445
197	0.548	439
198	0.542	434
199	0.537	429
200	0.531	424
201	0.526	419
202	0.520	415
203	0.515	410
204	0.510	405
205	0.505	401
206	0.499	396
207	0.494	391
208	0.488	386
209	0.483	382
210	0.477	377
211	0.471	372
212	0.465	367
213	0.459	361
214	0.453	356
215	0.446	350
216	0.439	344
217	0.432	338
218	0.425	332
219	0.417	325
220	0.409	318
221	0.401	311
222	0.393	304
223	0.384	297
224	0.375	289
225	0.366	282

Table 9B — Thermistor Temperature (C) vs Resistance/Voltage Drop

TEMPERATURE (C)	VOLTAGE DROP (V)	RESISTANCE (Ohms)
−40	4.896	168 230
−39	4.889	157 440
−38	4.882	147 410
−37	4.874	138 090
−36	4.866	129 410
−35	4.857	121 330
−34	4.848	113 810
−33	4.838	106 880
−32	4.828	100 260
−31	4.817	94 165
−30	4.806	88 480
−29	4.794	83 170
−28	4.782	78 125
−27	4.769	73 580
−26	4.755	69 250
−25	4.740	65 205
−24	4.725	61 420
−23	4.710	57 875
−22	4.693	54 555
−21	4.676	51 450
−20	4.657	48 536
−19	4.639	45 807
−18	4.619	43 247
−17	4.598	40 845
−16	4.577	38 592
−15	4.554	38 476
−14	4.531	34 489
−13	4.507	32 621
−12	4.482	30 866
−11	4.456	29 216
−10	4.428	27 633
−9	4.400	26 202
−8	4.371	24 827
−7	4.341	23 532
−6	4.310	22 313
−5	4.278	21 163
−4	4.245	20 079
−3	4.211	19 058
−2	4.176	18 094
−1	4.140	17 184
0	4.103	16 325
1	4.065	15 515
2	4.026	14 749
3	3.986	14 026
4	3.945	13 342
5	3.903	12 696
6	3.860	12 085
7	3.816	11 506
8	3.771	10 959
9	3.726	10 441
10	3.680	9 949
11	3.633	9 485
12	3.585	9 044
13	3.537	8 627
14	3.487	8 231
15	3.438	7 855
16	3.387	7 499
17	3.337	7 161
18	3.285	6 840
19	3.234	6 536
20	3.181	6 246
21	3.129	5 971
22	3.076	5 710
23	3.023	5 461
24	2.970	5 225
25	2.917	5 000
26	2.864	4 786
27	2.810	4 583
28	2.757	4 389
29	2.704	4 204
30	2.651	4 028
31	2.598	3 861
32	2.545	3 701
33	2.493	3 549
34	2.441	3 404
35	2.389	3 266
36	2.337	3 134
37	2.286	3 008
38	2.236	2 888
39	2.186	2 773
40	2.137	2 663
41	2.087	2 559
42	2.039	2 459
43	1.991	2 363
44	1.944	2 272

TEMPERATURE (C)	VOLTAGE DROP (V)	RESISTANCE (Ohms)
45	1.898	2 184
46	1.852	2 101
47	1.807	2 021
48	1.763	1 944
49	1.719	1 871
50	1.677	1 801
51	1.635	1 734
52	1.594	1 670
53	1.553	1 609
54	1.513	1 550
55	1.474	1 493
56	1.436	1 439
57	1.399	1 387
58	1.363	1 337
59	1.327	1 290
60	1.291	1 244
61	1.258	1 200
62	1.225	1 158
63	1.192	1 118
64	1.160	1 079
65	1.129	1 041
66	1.099	1 006
67	1.069	971
68	1.040	938
69	1.012	906
70	0.984	876
71	0.949	836
72	0.920	805
73	0.892	775
74	0.865	747
75	0.838	719
76	0.813	693
77	0.789	669
78	0.765	645
79	0.743	623
80	0.722	602
81	0.702	583
82	0.683	564
83	0.665	547
84	0.648	531
85	0.632	516
86	0.617	502
87	0.603	489
88	0.590	477
89	0.577	466
90	0.566	456
91	0.555	446
92	0.545	436
93	0.535	427
94	0.525	419
95	0.515	410
96	0.506	402
97	0.496	393
98	0.486	385
99	0.476	376
100	0.466	367
101	0.454	357
102	0.442	346
103	0.429	335
104	0.416	324
105	0.401	312
106	0.386	299
107	0.370	285

Control Modules

⚠ CAUTION

Turn controller power off before servicing controls. This ensures safety and prevents damage to controller.

The Processor module (PSIO), 8-input (Options) modules, Starter Management Module (SMM), and the Local Interface Device (LID) module perform continuous diagnostic evaluations of the hardware to determine its condition. Proper operation of all modules is indicated by LEDs (light-emitting diodes) located on the side of the LID and on the top horizontal surface of the PSIO, SMM, and 8-input modules.

RED LED — If the LED blinks continuously at a 2-second rate, it indicates proper operation. If it is lit continuously, it indicates a problem requiring replacement of the module. Off continuously indicates that the power should be checked. If the red LED blinks 3 times per second, a software error has been discovered and the module must be replaced. If there is no input power, check fuses and the circuit breaker. If fuse is good, check for shorted secondary of transformer or, if power is present to the module, replace the module.

GREEN LEDs — There are one or 2 green LEDs on each type of module. These LEDs indicate communication status between different parts of the controller and the network modules as follows:

LID Module

Upper LED — Communication with CCN network, if present; blinks when communication occurs.

Lower LED — Communication with PSIO module; must blink every 5 to 8 seconds when the LID default screen is displayed.

PSIO Module

Green LED closest to communications connection — Communication with SMM and 8-input module; must blink continuously.

Other Green LED — Communication with LID; must blink every 3 to 5 seconds.

8-Input Modules and SMM

Green LED — Communication with PSIO module; will blink continuously.

Notes on Module Operation

1. The chiller operator monitors and modifies configurations in the microprocessor through the 4 softkeys and the LID. Communication with the LID and the PSIO is accomplished through the CCN bus. The communication between the PSIO, SMM, and both 8-input modules is accomplished through the sensor bus, which is a 3-wire cable.

   On sensor bus terminal strips, Terminal 1 of PSIO module is connected to Terminal 1 of each of the other modules. Terminals 2 and 3 are connected in the same manner. See Fig. 37-41. If a Terminal 2 wire is connected to Terminal 1, the system does not work.

2. If a green LED is solid on, check communication wiring. If a green LED is off, check the red LED operation. If the red LED is normal, check the module address switches (Fig. 37-41). Proper addresses are:

MODULE	ADDRESS	
	SW1	SW2
SMM (Starter Management Module)	3	2
8-input Options Module 1	6	4
8-input Options Module 2	7	2

   If all modules indicate communications failure, check communications plug on the PSIO module for proper seating. Also check the wiring (CCN bus — 1:red, 2:wht, 3:blk; Sensor bus — 1:red, 2:blk, 3:clr/wht). If a good connection is assured and the condition persists, replace the PSIO module.

   If only one 8-input module or SMM indicates communication failure, check the communications plug on that module. If a good connection is assured and the condition persists, replace the module.

   All system operating intelligence rests in the PSIO module. Some safety shutdown logic resides in the SMM in case communications are lost between the 2 modules. The PSIO monitors conditions using input ports on the PSIO, the SMM, and the 8-input modules. Outputs are controlled by the PSIO and SMM as well.

3. Power is supplied to modules within the control panel via 21-vac power sources.

   The transformers are located within the power panel, with the exception of the SMM, which operates from a 24-vac power source and has its own 24-vac transformer located within the starter.

   Within the power panel, T1 supplies power to the LID, the PSIO, and the 5-vac power supply for the transducers. The other 21-vac transformer is T4, which supplies power to both 8-input modules (if present). T4 is capable of supplying power to two modules. If additional modules are added, another power supply will be required.

   Power is connected to Terminals 1 and 2 of the power input connection on each module.

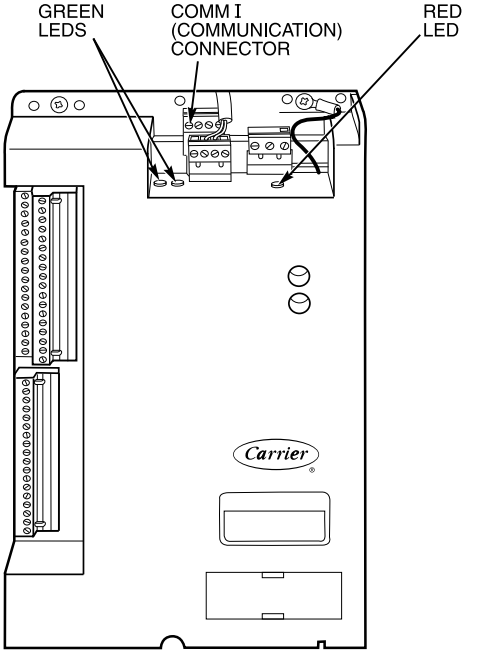

Fig. 37 — PSIO Module Address Selector Switch Locations and LED Locations

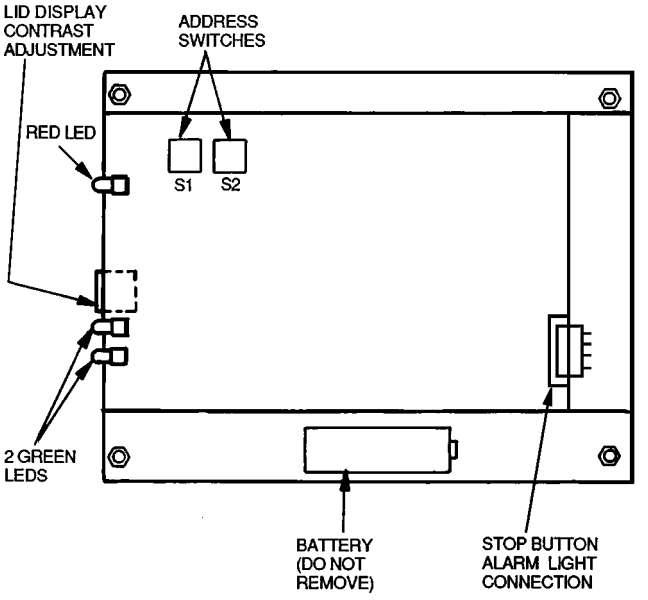

NOTE: Address switches on this module can be at any position. Addresses are only changed through the LID screen or CCN.

Fig. 38 — LID Module (Rear View) and LED Locations

Processor Module (PSIO) (Fig. 39)

INPUTS — Each input channel has 3 terminals, only 2 of which are normally used depending on the application of the chiller. Always refer to individual unit wiring for terminal numbers.

OUTPUTS — Output is 20 vdc. There are 3 terminals per output, only 2 of which are used, depending on the application. Refer to the unit wiring diagram.

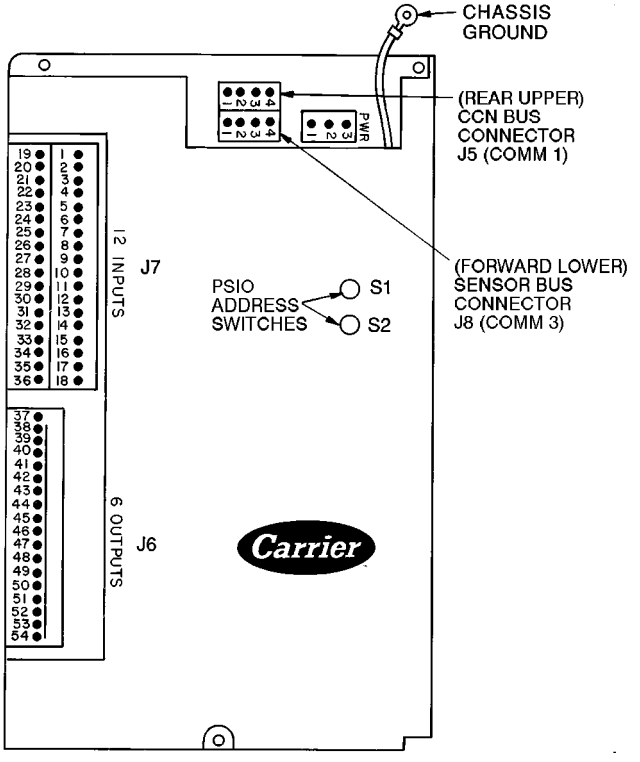

NOTE: Address switches on this module can be at any position. Addresses can only be changed through the LID or CCN.

Fig. 39 — Processor (PSIO) Module

Starter Management Module (SMM) (Fig. 40)

INPUTS — Inputs on strips J2 and J3 are a mix of analog and discrete (on/off) inputs. Application of the chiller determines which terminals are used. Always refer to the individual unit wiring diagram for terminal numbers.

OUTPUTS — Outputs are 24 vdc and wired to strip J1. There are 2 terminals used per output.

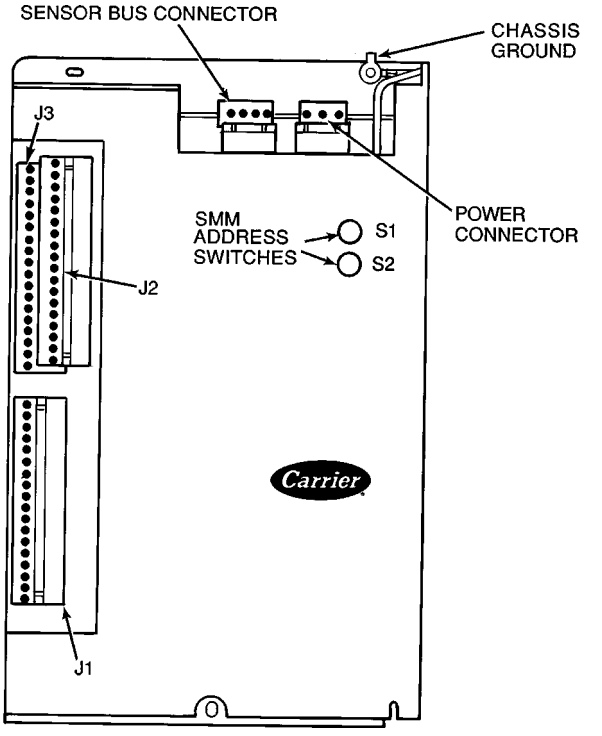

NOTE: SSM address switches should be set as follows: S1 set at 3; S2 set at 2.

Fig. 40 — Starter Management Module (SSM)

Options Modules (8-Input) — The options modules are optional additions to the PIC and are used to add temperature reset inputs, spare sensor inputs, and demand limit inputs. Each option module contains 8 inputs, each input meant for a specific duty. See the wiring diagram for exact module wire terminations. Inputs for each of the options modules available include the following:

OPTION MODULE 1
4 to 20 mA Auto. Demand Reset
4 to 20 mA Auto. Chilled Water Reset
Common Chilled Water Supply Temperature
Common Chilled Water Return Temperature
Remote Temperature Reset Sensor
Spare Temperature 1
Spare Temperature 2
Spare Temperature 3

OPTION MODULE 2
4 to 20 mA Spare 1
4 to 20 mA Spare 2
Spare Temperature 4
Spare Temperature 5
Spare Temperature 6
Spare Temperature 7
Spare Temperature 8
Spare Temperature 9

Terminal block connections are provided on the options modules. All sensor inputs are field wired and installed. Options module number 1 can be factory or field-installed. Options module 2 is shipped separately and must be field installed. For installation, refer to the unit or field wiring diagrams. Be sure to address the module for the proper module number (Fig. 41) and to configure the chiller for each feature being used.

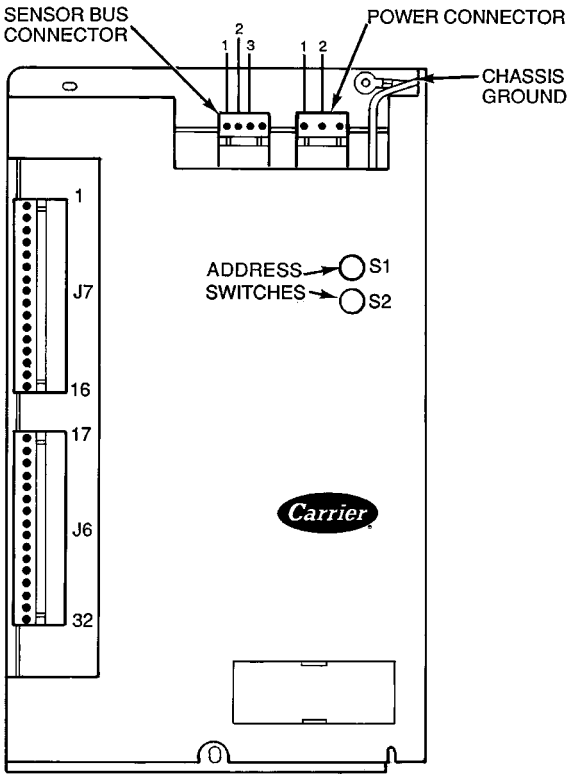

SWITCH SETTING	OPTION MODULE 1	OPTION MODULE 2
S1	6	7
S2	4	2

Fig. 41 — Options Module

Replacing Defective Processor Modules — The replacement part number is printed in a small label on the front of the PSIO module. The model and serial numbers are printed on the unit nameplate located on an exterior corner post. The proper software is factory-installed by Carrier in the replacement module. When ordering a replacement processor module (PSIO), specify complete replacement part number, full unit model number, and serial number. This new unit requires reconfiguration to the original chiller data by the installer. Follow the procedures described in the Set Up Chiller Control Configuration section on page 45.

⚠ CAUTION

Electrical shock can cause personal injury. Disconnect all electrical power before servicing.

INSTALLATION

1. Verify if the existing PSIO module is defective by using the procedure described in the Troubleshooting Guide section, page 59, and Control Modules section, page 71. Do not select the Attach to Network Device table if the LID displays communication failure.
2. Data regarding the PSIO configuration should have been recorded and saved. This data will have to be reconfigured into the LID. If this data is not available, follow the procedures described in the Set Up Chiller Control Configuration section.

   If a CCN Building Supervisor or Service Tool is present, the module configuration should have already been uploaded into memory; then, when the new module is installed, the configuration can be downloaded from the computer.

   Any communication wires from other chillers or CCN modules should be disconnected to prevent the new PSIO module from uploading incorrect run hours into memory.
3. To install this module, first record the TOTAL COMPRESSOR STARTS and the COMPRESSOR ONTIME from the STATUS01 table screen on the LID.
4. Power off the controls.
5. Remove the old PSIO. DO NOT install the new PSIO at this time.
6. Turn on the control power. When the LID screen reappears, press the MENU softkey, then press the SERVICE softkey. Enter the password, if applicable. Move the highlight bar down to the ATTACH TO NETWORK DEVICE line. Press the SELECT softkey. Now, press the ATTACH softkey. The LID will display "UPLOADING TABLES, PLEASE WAIT" and then display "COMMUNICATIONS FAILURE." Press the EXIT softkey.
7. Turn the control power off.
8. Install the new PSIO module. Turn the control power back on.
9. The LID will now automatically upload the new PSIO module.
10. Access the Status01 table and move the highlight bar down to the TOTAL COMPRESSOR STARTS line. Press the SELECT softkey. Increase the value to indicate the correct starts value recorded in Step 3. Press the ENTER softkey when you reach the correct value. Now, move the highlight bar to the COMPRESSOR ONTIME line. Press the SELECT softkey. Increase the run hours value to the value recorded in Step 2. Press the ENTER softkey when the correct value is reached.
11. Complete the PSIO installation. Following the instructions in the Start-up, Operation, and Maintenance manual, input all the proper configurations such as the time, date, etc. Re-calibrate the motor amps and check the pressure transducer calibrations. PSIO installation is now complete.

Solid-State Starters — Troubleshooting guides and information pertaining to the operation of the solid-state starter may be found in Fig. 42-44 and in the Start-up, Operation, and Maintenance manual supplied by the starter vendor.

Attempt to solve the problem by using the following preliminary checks before consulting the troubleshooting tables found in the vendor's manual.

When the power is off:

- Inspect for physical damage and signs of arcing, overheating, etc.
- Is the wiring to the starter correct?
- Are all connections in the starter tight?
- Is the current feedback resistor properly adjusted and installed?
- Is a heater coil installed in each leg of the motor?
- Is the control transformer fuse blown?
- Is the motor connected to the starter?

TESTING SILICON CONTROL RECTIFIERS IN BENSHAW, INC. SOLID-STATE STARTERS — If a silicon control rectifier (SCR) is suspected of being defective, use the following procedure as part of a general troubleshooting guide.

> IMPORTANT: Before performing the SCR check below, remove power from the starter, and disconnect the motor terminals T1, T2, and T3.

1. Connect ohmmeter across terminals L1 and T1. Resistance reading should be greater than 50,000 ohms.
2. If reading is less than 50,000 ohms, remove connecting bus heatsink between SCR3 and SCR6 and check anode to cathode of SCR3 and SCR6 separately to determine which device is defective. See Fig. 42. Replace defective device and retest controller.
3. Repeat Steps 1 and 2 across terminals L2 and T2 for SCRs 2 and 5.
4. Repeat Steps 1 and 2 across terminals L3 and T3 for SCRs 1 and 4.

   If the SCRs tested were not defective but the problem still persists, refer to Steps 5 and 6.
5. Disconnect the SCR1 from the white gate and red cathode wires on the bypass card. With an ohmmeter set on Rx1, check between white and red wires. Resistance should normally be between 8 and 20 ohms average. Excessively high or low resistance may indicate a defective device. Replace and retest.
6. Repeat Step 5 for SCR leads 2 through 6. Take care to ensure that the gate and cathode wires are replaced exactly as they were: white wire to gate (G1 through G6); red wire to cathode (K1 through K6).

> **⚠ CAUTION**
>
> Damage to the starter may result if wires are reversed.

If problem is still not resolved, consult the starter manufacturer for servicing.

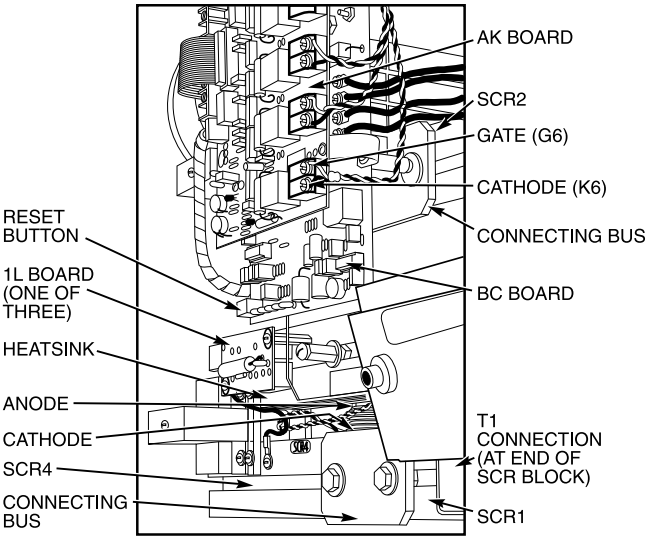

LEGEND

SCR — Silicon Control Rectifier

Fig. 42 — Typical Benshaw, Inc. Solid-State Starter (Internal View)

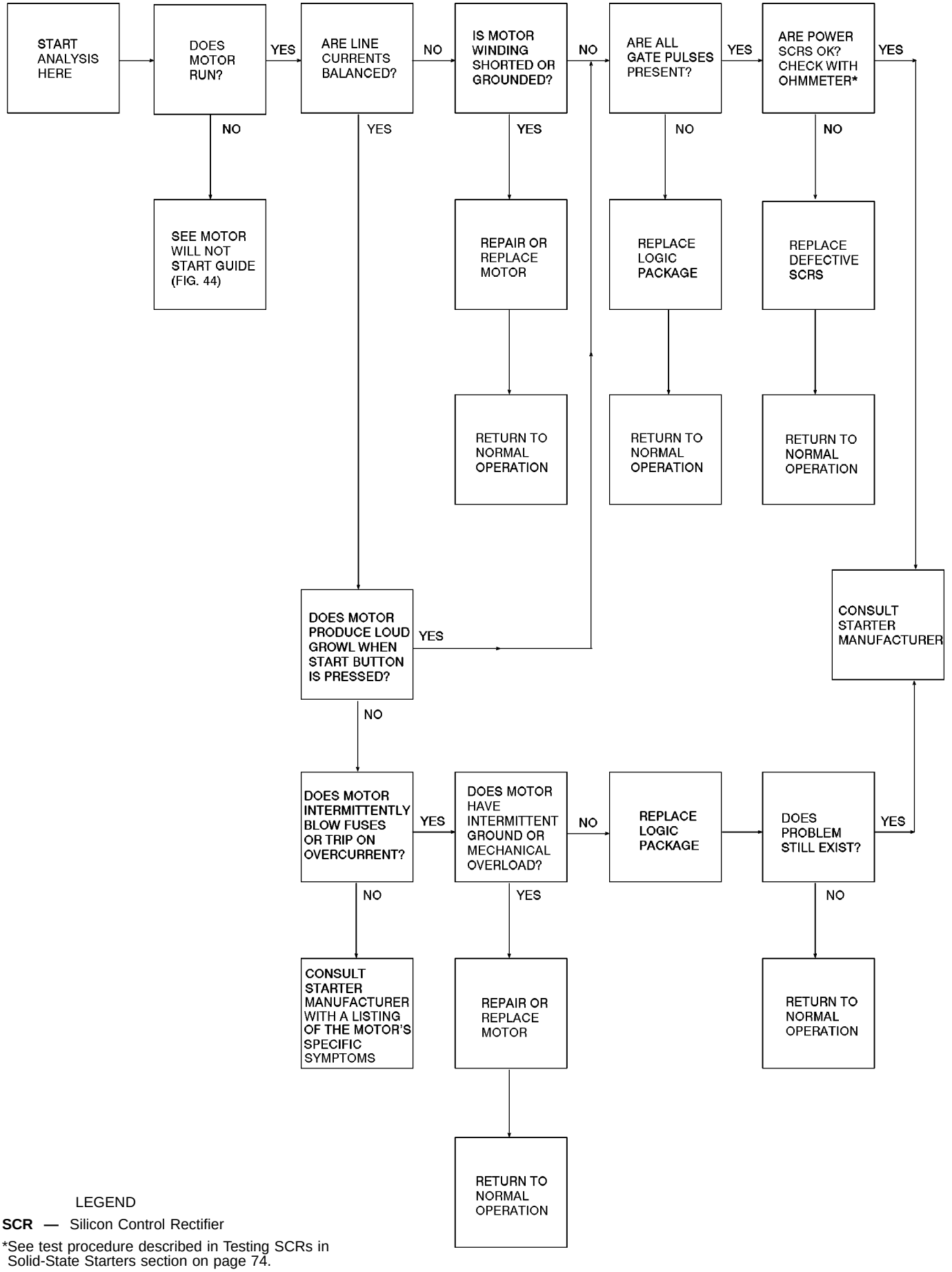

LEGEND

SCR — Silicon Control Rectifier

*See test procedure described in Testing SCRs in Solid-State Starters section on page 74.

Fig. 43 — Solid-State Starter, General Operation Troubleshooting Guide (Typical)

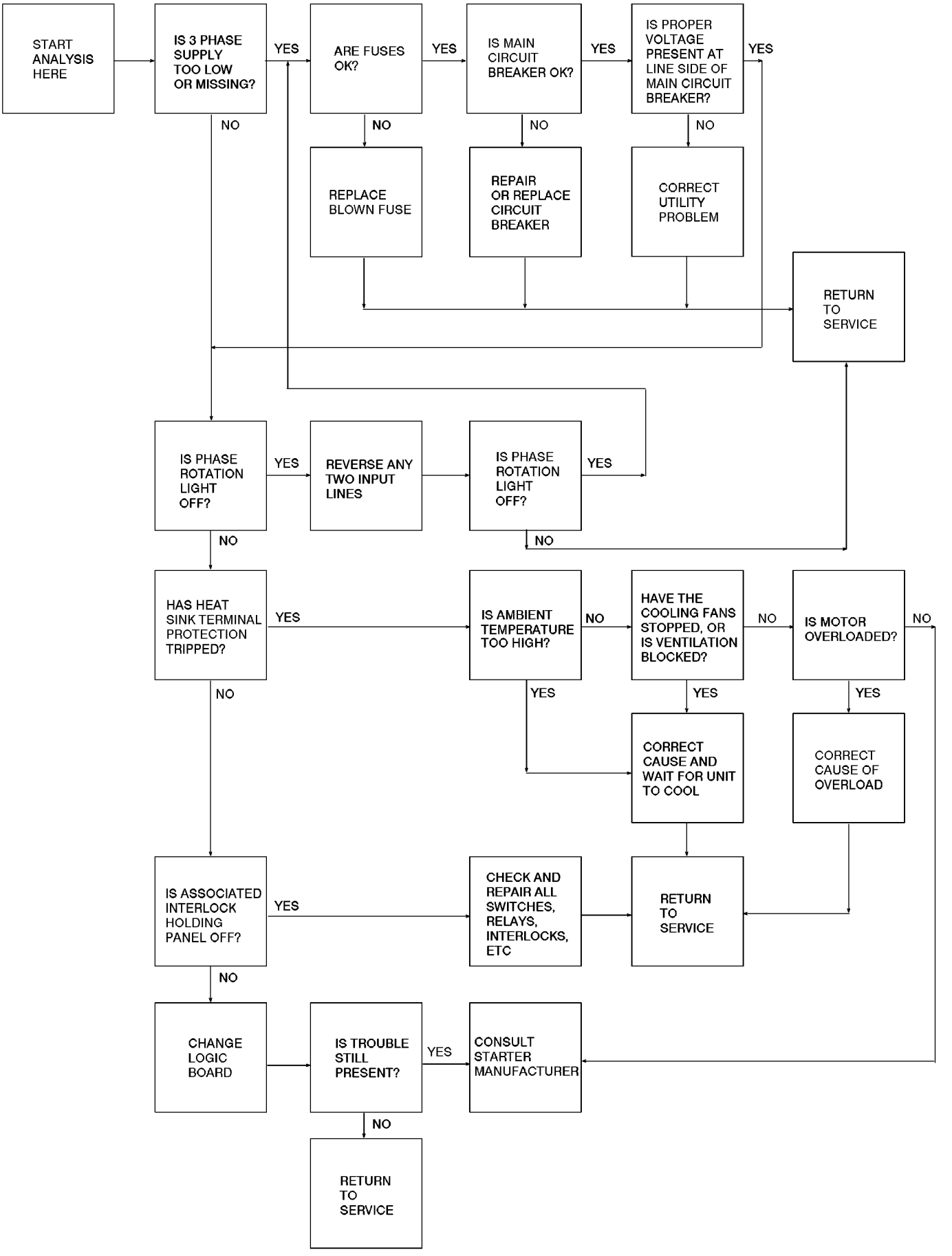

Fig. 44 — Solid-State Starter, Starter Fault (Motor Will Not Start) Troubleshooting Guide (Typical)

Physical Data — Tables 10-17 and Fig. 45-49 provide additional information regarding component weights, compressor fits and clearances, physical and electrical data, and wiring schematics for operator convenience during troubleshooting.

→ **Table 10 — Heat Exchanger Data**

CODE	NUMBER OF TUBES		ENGLISH					
			Dry (Rigging) Weight (lb)		Machine Charge			
					Refrigerant Weight		Water Volume (gal)	
	Cooler	Condenser	Cooler Only	Condenser Only	Cooler	Condenser	Cooler	Condenser
30	200	218	3587	4204	350	260	55	55
31	240	267	3769	4409	420	260	64	65
32	280	315	3952	4610	490	260	72	74
35	200	218	3899	4591	400	310	61	62
36	240	267	4107	4825	480	310	70	72
37	280	315	4314	5054	550	310	80	83
40	324	370	5898	6071	560	280	89	96
41	364	417	6080	6268	630	280	97	106
42	400	463	6244	6461	690	280	105	114
45	324	370	6353	6636	640	330	98	106
46	364	417	6561	6861	720	330	108	117
47	400	463	6748	7080	790	330	116	127
50	431	509	7015	7293	750	400	115	128
51	485	556	7262	7490	840	400	126	137
52	519	602	7417	7683	900	400	133	146
55	431	509	7559	7990	870	490	127	142
56	485	556	7839	8214	940	490	139	152
57	519	602	8016	8434	980	490	147	162
60	557	648	8270	8286	940	420	144	159
61	599	695	8462	8483	980	420	153	168
62	633	741	8617	8676	1020	420	160	177
65	557	648	8943	9204	1020	510	160	176
66	599	695	9161	9428	1060	510	169	187
67	633	741	9338	9648	1090	510	177	197

CODE	NUMBER OF TUBES		SI					
			Dry (Rigging) Weight (kg)		Machine Charge			
					Refrigerant Weight		Water Volume (L)	
	Cooler	Condenser	Cooler Only	Condenser Only	Cooler	Condenser	Cooler	Condenser
30	200	218	1627	1907	159	118	210	210
31	240	267	1709	2000	190	118	241	246
32	280	315	1792	2091	222	118	271	282
35	200	218	1768	2082	181	141	232	233
36	240	267	1863	2188	218	141	266	273
37	280	315	1956	2292	249	141	301	314
40	324	370	2675	2753	254	127	338	365
41	364	417	2757	2843	286	127	368	400
42	400	463	2832	2930	313	127	396	433
45	324	370	2881	3010	290	150	372	403
46	364	417	2976	3112	327	150	407	442
47	400	463	3060	3211	358	150	438	481
50	431	509	3181	3307	340	181	435	483
51	485	556	3293	3397	381	181	477	518
52	519	602	3364	3484	408	181	502	552
55	431	509	3428	3624	395	222	481	536
56	485	556	3555	3725	426	222	527	575
57	519	602	3635	3825	445	222	557	613
60	557	648	3751	3758	426	190	546	601
61	599	695	3838	3847	445	190	578	636
62	633	741	3908	3935	463	190	604	669
65	557	648	4056	4174	463	231	605	668
66	599	695	4155	4276	481	231	641	707
67	633	741	4235	4376	494	231	671	745

NOTES:
1. Cooler data: Based on a cooler with standard wall tubing, 2-pass, 150 psig, nozzle-in-head waterbox with victaulic grooves. Weight includes suction elbow, control panel, and distribution piping. Weight does not include compressor.
2. Condenser data: Based on a condenser with standard wall tubing, 2-pass, 150 psig, nozzle-in-head waterbox with victaulic grooves. Weight includes the float valve, discharge elbow, and distribution piping. Weight does not include unit-mounted starter, isolation valves, and pumpout unit.

Table 11 — 19XR Additional Data for Marine Waterboxes*

HEAT EXCHANGER FRAME, PASS	ENGLISH			SI		
	Psig	Rigging Weight (lb)	Water Volume (gal)	kPa	Rigging Weight (kg)	Water Volume (L)
FRAME 3, 1 AND 2 PASS	150	730	84	1034	331	317
FRAME 3, 2 PASS	150	365	42	1034	166	159
FRAME 4, 1 AND 3 PASS	150	1060	123	1034	481	465
FRAME 4, 2 PASS	150	530	61	1034	240	231
FRAME 5, 1 AND 3 PASS	150	1240	139	1034	562	526
FRAME 5, 2 PASS	150	620	69	1034	281	263
FRAME 6, 1 AND 3 PASS	150	1500	162	1034	680	612
FRAME 6, 2 PASS	150	750	81	1034	340	306
FRAME 3, 1 AND 3 PASS	300	860	84	2068	390	317
FRAME 3, 2 PASS	300	430	42	2068	195	159
FRAME 4, 1 AND 3 PASS	300	1210	123	2068	549	465
FRAME 4, 2 PASS	300	600	61	2068	272	231
FRAME 5, 1 AND 3 PASS	300	1380	139	2068	626	526
FRAME 5, 2 PASS	300	690	69	2068	313	263
FRAME 6, 1 AND 3 PASS	300	1650	162	2068	748	612
FRAME 6, 2 PASS	300	825	81	2068	374	306

*Add to heat exchanger data for total weights or volumes.

NOTES:
1. Weight shown is total for cooler and condenser. Cooler and condenser of the same frame size are of equal weight.
2. For the total weight of a vessel with a marine waterbox, add these values to the heat exchanger weights (or volume).

Table 12 — Compressor Weights

COMPONENT	FRAME 3 COMPRESSOR WEIGHT		FRAME 4 COMPRESSOR WEIGHT	
	Lb	Kg	Lb	Kg
SUCTION ELBOW	54	24	175	79
DISCHARGE ELBOW	46	21	157	71
TRANSMISSION	730	331	656	298
SUCTION HOUSING	350	159	446	202
IMPELLER SHROUD	80	36	126	57
COMPRESSOR BASE	1050	476	1589	721
DIFFUSER	70	32	130	59
OIL PUMP	150	68	150	68
MISCELLANEOUS	135	61	144	65
TOTAL WEIGHT (Less Motor)	2660	1207	3712	1684

Table 13 — 19XR Motor Weights

High Efficiency Motors

MOTOR SIZE	VOLTAGE (V)	ENGLISH						SI					
		Stator Weight* (lb)		Rotor Weight (lb)		End Bell Cover (lb)		Stator Weight* (kg)		Rotor Weight (kg)		End Bell Cover (kg)	
		60 Hz	50 Hz	60 Hz	50 Hz	60 Hz	50 Hz	60 Hz	50 Hz	60 Hz	50 Hz	60 Hz	50 Hz
CD	200- 575	1286	1358	299	314	273	273	583	616	136	142	124	124
CE	200- 575	1305	1377	306	320	273	273	592	624	139	145	124	124
CL	200- 575	1324	1435	312	333	273	273	600	651	141	151	124	124
CM	200- 575	1347	1455	316	339	273	273	611	660	143	154	124	124
CN	200- 575	1358	1467	319	342	273	273	616	665	145	155	124	124
CP	200- 575	1401	1479	331	345	273	273	635	671	150	156	124	124
CQ	200- 575	1455	1479	345	345	273	273	660	671	156	156	124	124
DB	200- 575	1651	1705	361	386	167	167	749	773	164	175	76	76
	2400-4160	1665	1681	304	391	167	167	755	762	138	177	76	76
DC	200- 575	1663	1729	371	392	167	167	754	784	168	178	76	76
	2400-4160	1681	1734	391	404	167	167	762	786	177	183	76	76
DD	200- 575	1729	1737	381	396	167	167	784	788	173	180	76	76
	2400-4160	1729	1765	401	411	167	167	784	800	182	186	76	76
	6300-6900	1977	1997	530	546	206	206	897	906	240	248	93	93
DE	200- 575	1767	1749	396	399	167	167	802	793	180	181	76	76
	2400-4160	1734	1835	404	430	167	167	786	832	183	195	76	76
	6300-6900	2018	2039	550	550	206	206	915	925	249	249	93	93
DF	200- 575	1872	1810	423	410	167	167	849	821	192	186	76	76
	2400-4160	1765	1882	411	444	167	167	800	854	186	201	76	76
	6300-6900	2100	2070	575	567	206	206	953	939	261	257	93	93
DG	200- 575	1954	1828	443	416	167	167	886	829	201	187	76	76
	2400-4160	1835	1923	430	457	167	167	832	872	195	207	76	76
	6300-6900	2187	2153	599	599	206	206	992	977	272	272	93	93
DH	200- 575	1954	1954	443	443	167	167	886	886	201	201	76	76
	2400-4160	1882	2207	444	575	206	206	854	1001	201	261	93	93
	6300-6900	2203	2195	604	604	206	206	999	996	274	274	93	93
DJ	200- 575	not offered	1954	not offered	443	not offered	167	not offered	886	not offered	201	not offered	76
	2400-4160	1923	2305	457	587	206	206	872	1045	207	266	93	93
	6300-6900	2228	2265	614	614	206	206	1011	1027	279	279	93	93

Standard Efficiency Motors

MOTOR SIZE	VOLTAGE (V)	ENGLISH						SI					
		Stator Weight* (lb)		Rotor Weight (lb)		End Bell Cover (lb)		Stator Weight* (kg)		Rotor Weight (kg)		End Bell Cover (kg)	
		60 Hz	50 Hz	60 Hz	50 Hz	60 Hz	50 Hz	60 Hz	50 Hz	60 Hz	50 Hz	60 Hz	50 Hz
CD	200- 575	1153	1213	234	252	273	273	523	550	106	114	124	124
	2400-4160	1224	1216	253	271	273	273	555	552	115	123	124	124
CE	200- 575	1162	1227	237	255	273	273	527	557	108	116	124	124
	2400-4160	1257	1263	262	282	273	273	570	573	119	128	124	124
CL	200- 575	1202	1283	246	270	273	273	545	582	112	122	124	124
	2400-4160	1265	1275	266	285	273	273	574	578	121	129	124	124
CM	200- 575	1225	1308	254	275	273	273	556	593	115	125	124	124
	2400-4160	1298	1322	274	294	273	273	589	600	124	133	124	124
CN	200- 575	1276	1341	263	279	273	273	579	608	119	127	124	124
	2400-4160	1318	1361	281	304	273	273	598	617	127	138	124	124
CP	200- 575	1289	1356	266	284	273	273	585	615	121	129	124	124
	2400-4160	1347	1417	283	309	273	273	611	643	128	140	124	124
CQ	200- 575	1308	1363	273	287	273	273	593	618	124	130	124	124
	2400-4160	1423	1526	301	337	273	273	645	692	137	153	124	124

*Stator weight includes stator and shell.

Table 14 — 19XR Waterbox Cover Weights

ENGLISH (lb)

HEAT EXCHANGER	WATERBOX DESCRIPTION	FRAME 3		FRAME 4		FRAME 5		FRAME 6	
		Standard Nozzles	Flanged	Standard Nozzles	Flanged	Standard Nozzles	Flanged	Standard Nozzles	Flanged
COOLER/ CONDENSER	NIH, 1 Pass Cover, 150 psig	320	350	485	521	616	652	802	838
	NIH, 2 Pass Cover, 150 psig	320	350	487	540	590	663	770	843
	NIH, 3 Pass Cover, 150 psig	300	340	504	520	629	655	817	843
	NIH/MWB End Cover or MWB 1*, 2, or 3* Pass Cover, 150 psig	300	300	379	379	428	428	583	583
	MWB End Cover or MWB 1*, 2 or 3* Pass Cover, 300 psig	400	400	569	569	713	713	833	833

SI (kg)

HEAT EXCHANGER	WATERBOX DESCRIPTION	FRAME 3		FRAME 4		FRAME 5		FRAME 6	
		Standard Nozzles	Flanged	Standard Nozzles	Flanged	Standard Nozzles	Flanged	Standard Nozzles	Flanged
COOLER/ CONDENSER	NIH, 1 Pass Cover, 150 psig	145	159	220	236	279	296	364	380
	NIH, 2 Pass Cover, 150 psig	145	159	221	245	268	301	349	382
	NIH, 3 Pass Cover, 150 psig	140	154	229	236	285	297	371	381
	NIH/MWB End Cover or MWB 1*, 2, or 3* Pass Cover, 150 psig	136	136	172	172	194	194	264	264
	MWB End Cover or MWB 1*, 2 or 3* Pass Cover, 300 psig	181	181	258	258	323	323	378	378

LEGEND

NIH — Nozzle-in-Head
MWB — Marine Waterbox

*Cooler only.

NOTE: Weight for NIH 2-pass cover, 150 psig, are included in heat exchanger weights shown on Table 10.

Table 15 — Optional Pumpout System Electrical Data

MOTOR CODE	CONDENSER UNIT	VOLTS-PH-Hz	MAX RLA	LRA
1	19EA47-748	575-3-60	3.8	23.0
4	19EA42-748	200/208-3-60	10.9	63.5
5	19EA44-748	230-3-60	9.5	57.5
6	19EA46-748	400/460-3-50/60	4.7	28.8

LEGEND

LRA — Locked Rotor Amps
RLA — Rated Load Amps

Table 16 — Additional Miscellaneous Weights

ITEM	Lb	Kg
CONTROL CABINET	30	14
UNIT-MOUNTED STARTER	500	227
OPTIONAL ISOLATION VALVES	115	52

Table 17 — Motor Voltage Code

MOTOR VOLTAGE CODE		
Code	**Volts**	**Frequency**
60	200	60
61	230	60
62	380	60
63	416	60
64	460	60
65	575	60
66	2400	60
67	3300	60
68	4160	60
69	6900	60
50	230	50
51	346	50
52	400	50
53	3000	50
54	3300	50
55	6300	50

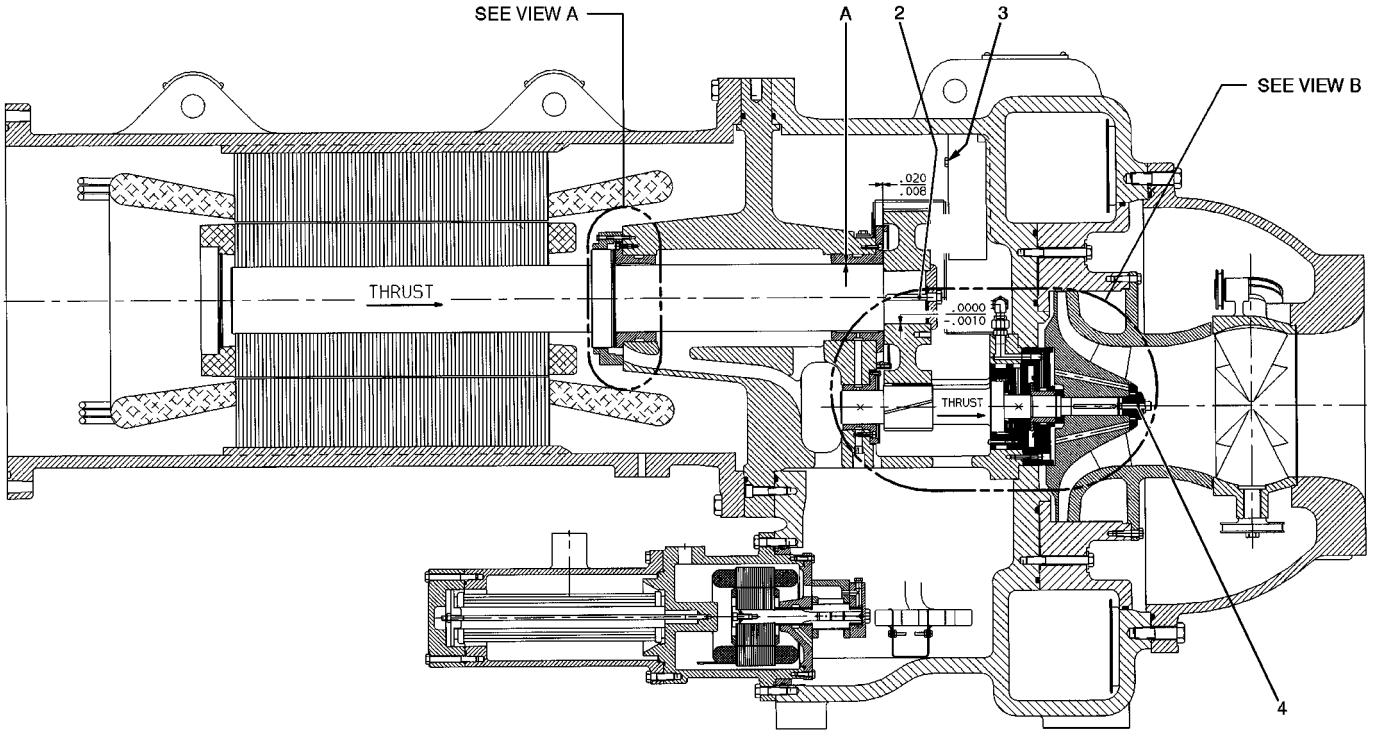

COMPRESSOR, TRANSMISSION AREA

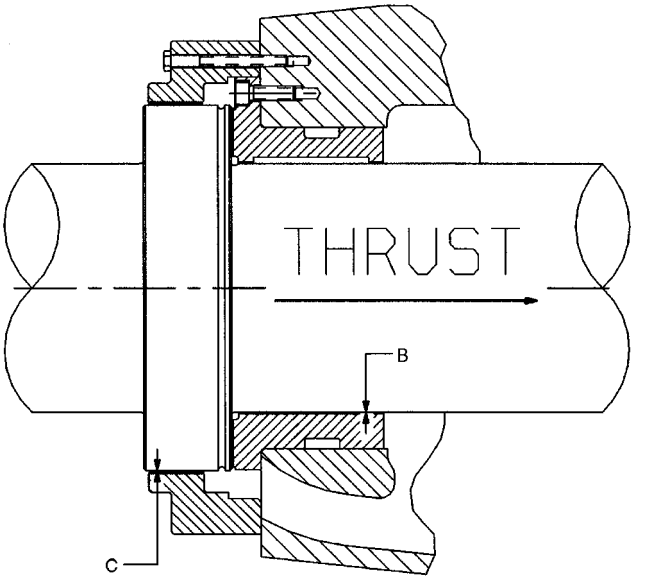

VIEW A
LOW SPEED SHAFT THRUST DISK

Compressor Assembly Torques

ITEM	DESCRIPTION	TORQUE	
		ft-lb	N·m
1*	Oil Heater Grommet Nut	10	14
2	Bull Gear Retaining Bolt	80-85	108-115
3	Demister Bolts	15-19	20-26
4	Impeller Retaining Bolt	44-46	60-62
5*	Motor Terminals (Low Voltage)	50	68
6*	Guide Vane Shaft Seal Nut	25	34
7*	Motor Terminals (High Voltage)		
	— Insulator	2-4	2.7-5.4
	— Packing Nut	5	6.8
	— Brass Jam Nut	10	13.6

LEGEND

N·m — Newton meters

*Not shown.

NOTES:
1. All clearances for cylindrical surfaces are diametrical.
2. Dimensions are with rotor in thrust position.
3. Dimensions shown are in inches.
4. Impeller clearance to shroud: allows 0.024 in. forward movement from thrust position for Frame 3 compressors; 0.030 in. for Frame 4 compressors.

Fig. 45 — Compressor Fits and Clearances

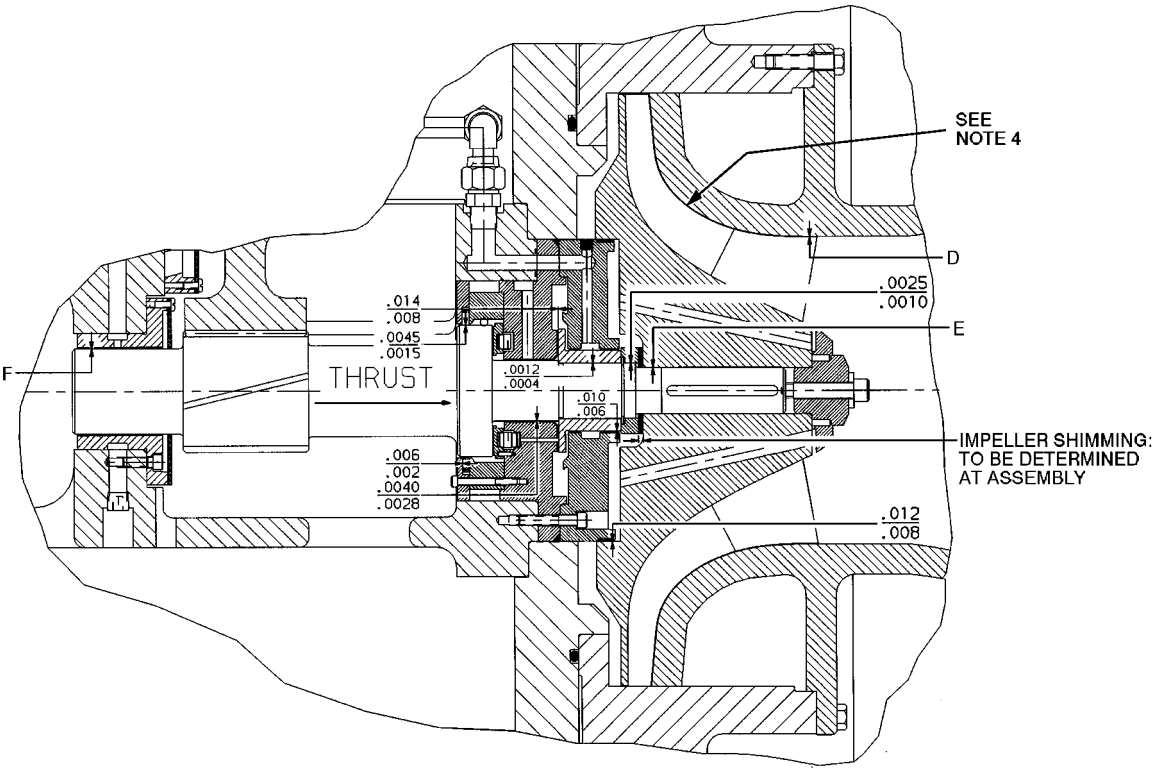

VIEW B − HIGH SPEED SHAFT

19XR Compressor Clearances

ITEM	COMPRESSOR CODE	
	321-389	421-489
A	.0050 / .0040	.0055 / .0043
B	.0050 / .0040	.0053 / .0043
C	.0115 / .0080	.0100 / .0050
D	.022 / .012	.027 / .017
E	− .0020 / − .0005	− .0029 / − .0014
F	.0050 / .0040	.0100 / .0005

Fig. 45 — Compressor Fits and Clearances (cont)

CONT'D
ON NEXT
PAGE.

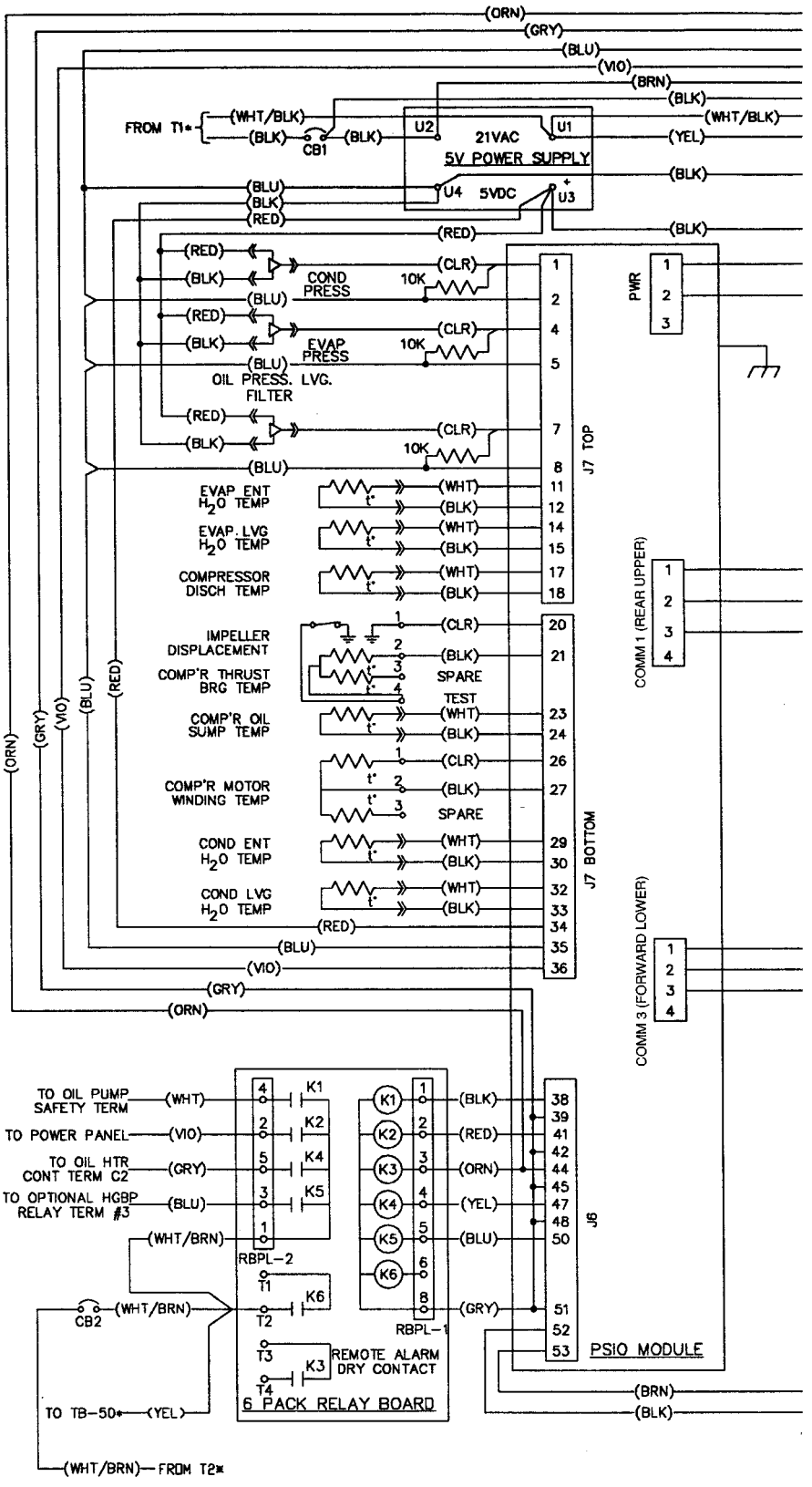

LEGEND

2C-C1	— Oil Pump Contactor Coil Terminal	**T1*,T2*, T4***	— Power Panel Transformers
CB	— Circuit Breaker	**TB**	— Terminal Board
G.V.	— Guide Vane	*	Denotes Power Panel Connection
HGBP	— Hot Gas Bypass	○	Denotes Component Terminal
J	— Module Connector		Denotes Wire Crimp Joint
LID	— Local Interface Device		
L1, L2	— Line Terminals		Denotes Conductor Male/Female Connector
PSIO	— Processor/Sensor Input/Output Module	- - - -	Option Wiring
T	— Terminal		

Fig. 46 — Electronic PIC Controls Wiring Schematic

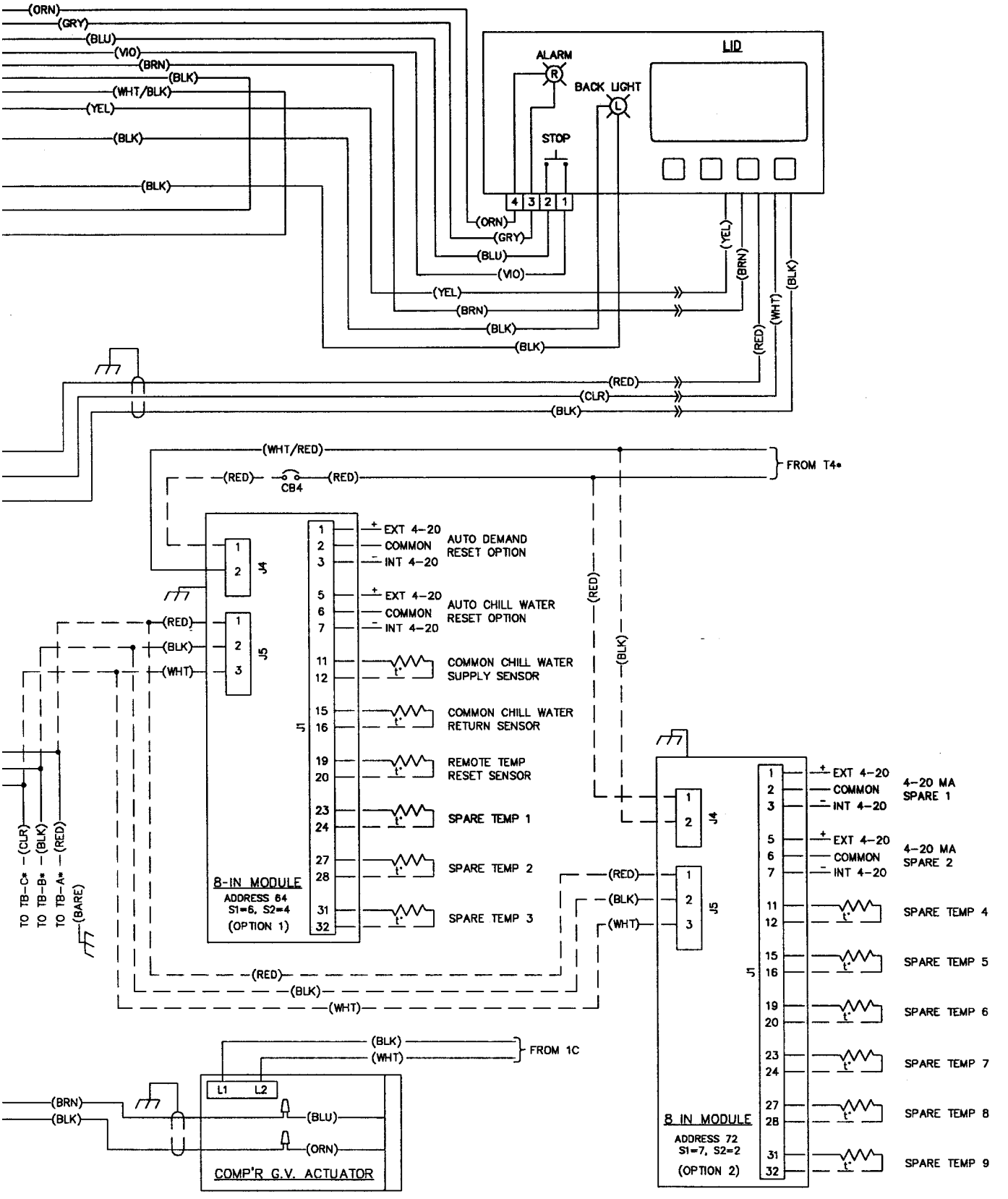

Fig. 46 — Electronic PIC Controls Wiring Schematic (cont)

LEGEND

C — Contactor
CB — Circuit Breaker
COMM — Communication
FW — Field Wiring
HGBP — Hot Gas Bypass
J — Module Connector
LID — Local Interface Device
M — Oil Pump Motor
PSIO — Processor Sensor Input/Output Module
Q.C. — Quick-Connect
RB — Relay Board
RBPL — Relay Board Plug
SMM — Starter Management Module
SOL — Solenoid
TB — Terminal Board

△ Denotes Oil Pump Terminal
□ Denotes Power Panel Terminal
○ Denotes Component Terminal
● Wire Splice
Option Wiring
(FW) Field Wiring (by Others)
Denotes Male/Female Q.C.
* Denotes Machine Control Panel Connection
** Denotes Motor Starter Panel Connection
Denotes (3) Conductor Connector
Denotes (2) Conductor Connector

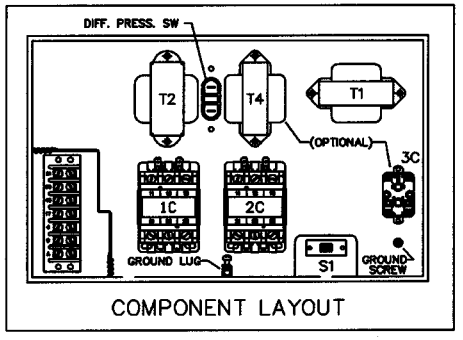

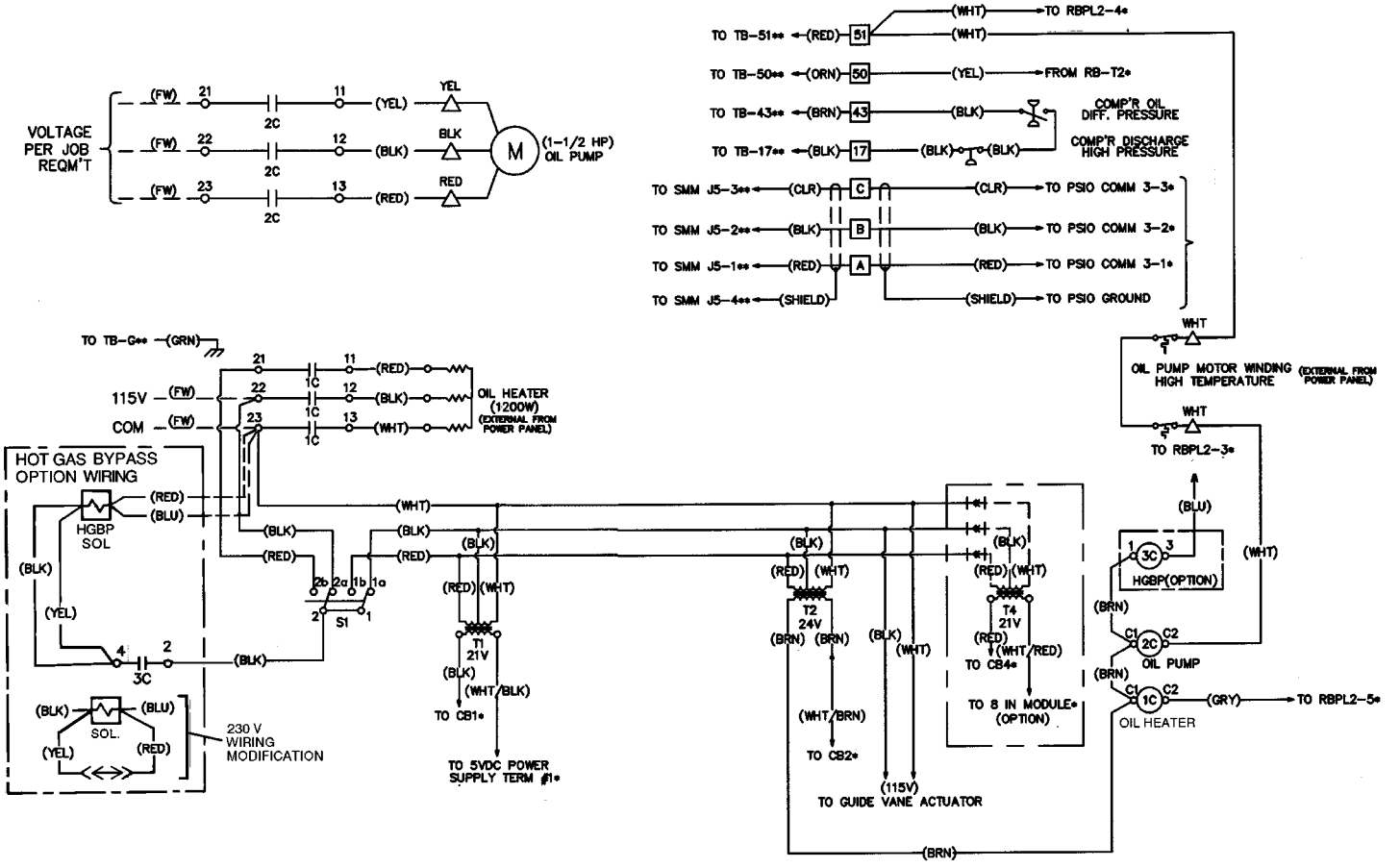

Fig. 47 — Power Panel Wiring

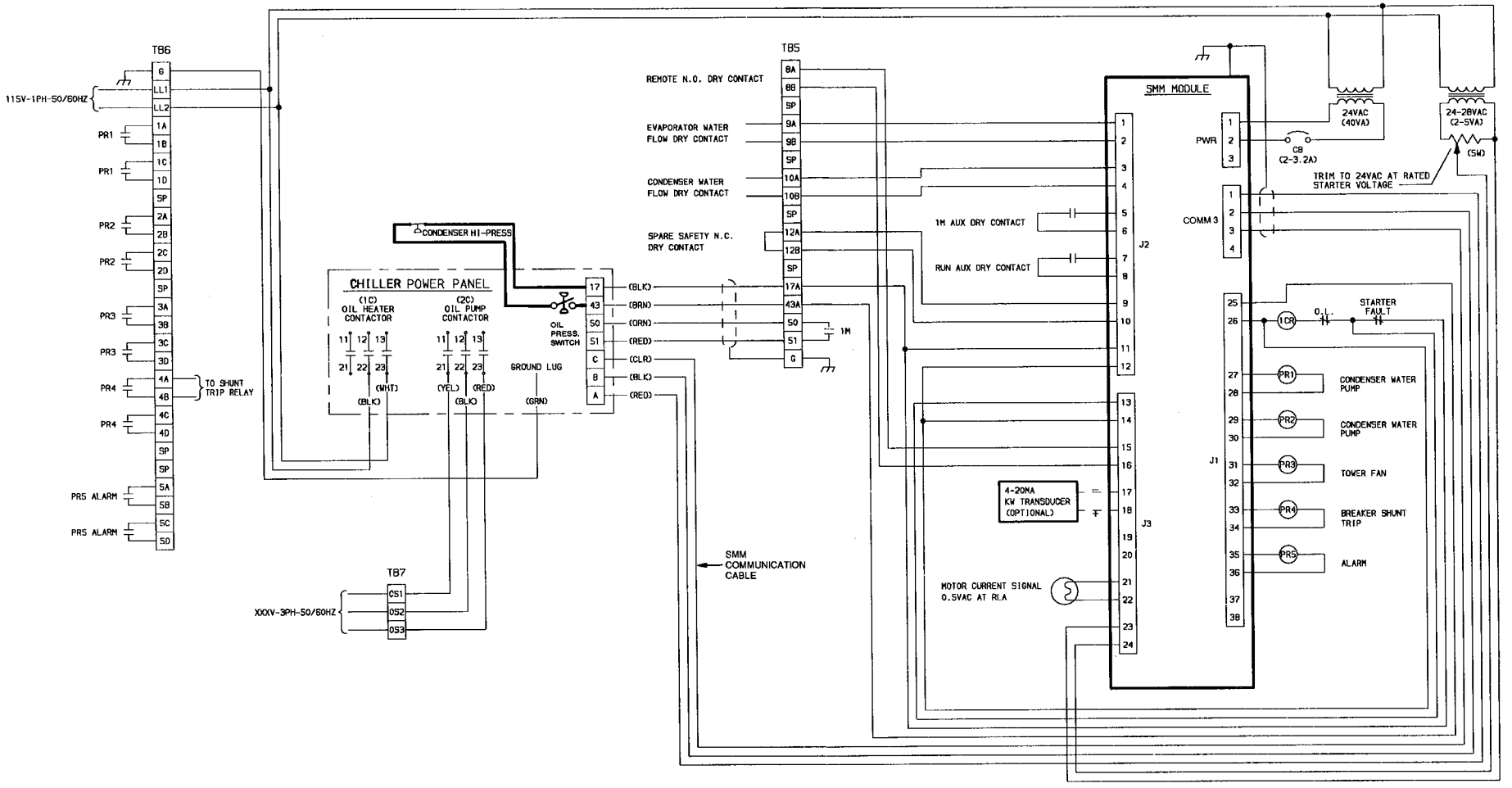

LEGEND

1M	— Main Starter Contactor	**RLA**	— Rated Load Amps
C	— Contactor	**SMM**	— Starter Management Module
CB	— Circuit Breaker	**TB**	— Terminal B
COMM	— Communication	**X**	— Variable Number
J	— Module Connector	———	Starter Cabinet Wiring
N.C.	— Normally Closed	- - - -	Field Wiring
N.O.	— Normally Open	▬▬▬	Carrier Factory Wiring
OL	— Overload		
OS1, OS2, OS3	— 3-Phase Current Power Source to Oil Pump		
PR	— Pilot Relay		
PWR	— Power		

Fig. 48 — Chiller Power Panel, Starter Assembly, and Motor Wiring Schematic (Typical, with Unit-Mounted Starter)

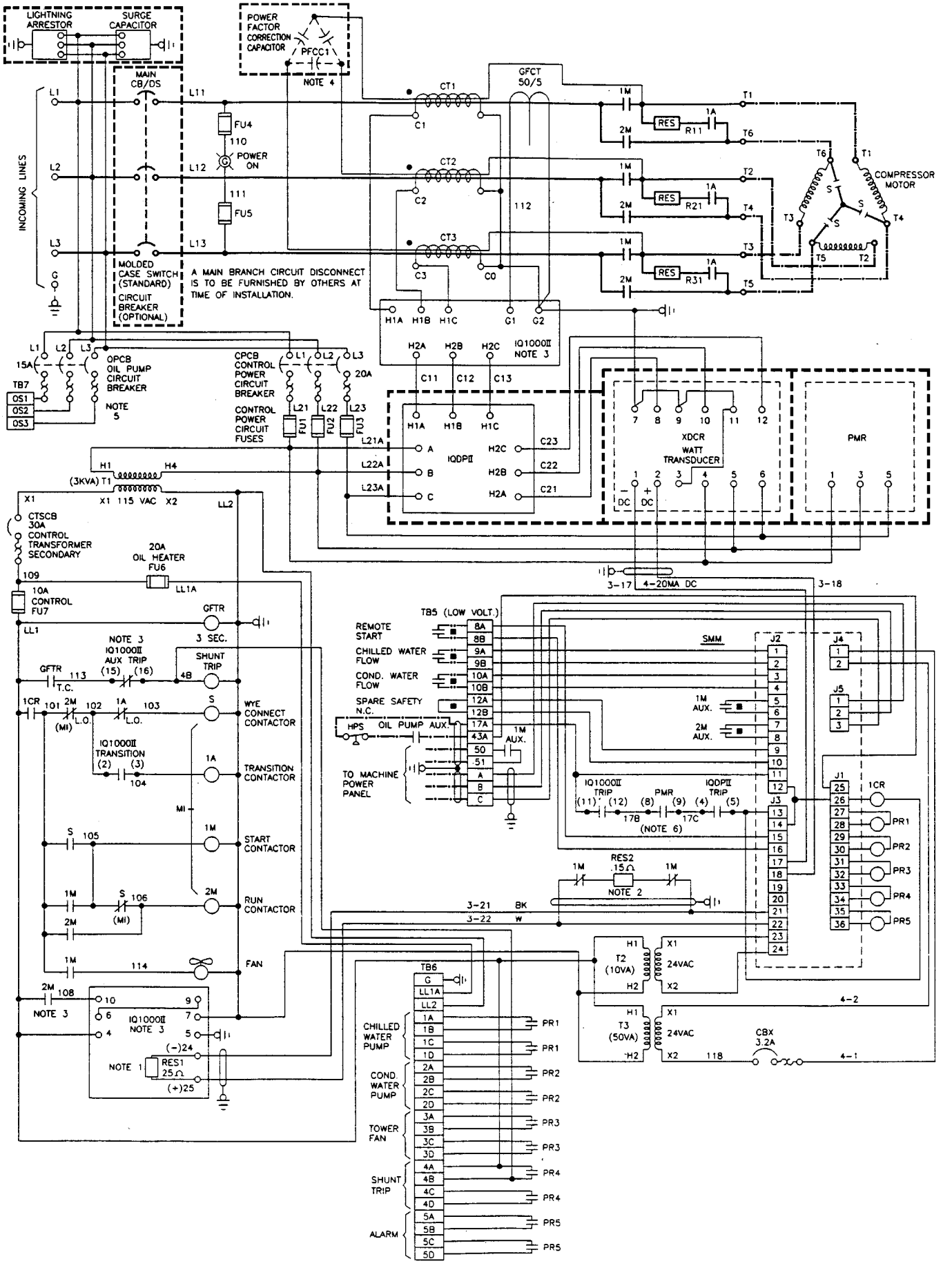

Fig. 49 — Typical Wye-Delta Unit Mounted Starter Wiring Schematic

LEGEND AND NOTES FOR FIG. 49

LEGEND

C	—	Connector
CB	—	Circuit Breaker
CR	—	Control Relay
CT	—	Current Transformer
CTSCB	—	Control Transformer Circuit Breaker
DP	—	Data Plus
DS	—	Disconnect
GFCT	—	Ground Fault Current Transformer
GFTR	—	Ground Fault Timer Relay
H	—	Power Transformer Primary Terminal
IQ 1000 II	—	Trade Name (Motor Protection System)
IQDP II	—	Trade Name: IQ Data Plus II (Line Metering and Protection System)
J	—	Module Connector
L1, L2, L3	—	3-Phase Line Terminals
LL1	—	Control Power (Feed)
LL2	—	Control Power (Neutral)
L.O.	—	Late Opening
M	—	Main Compressor Contactor
OS1, OS2, OS3	—	3-Phase Current Power Source to Oil Pump
PMR	—	Phase Loss Reversal Relay
PR	—	Pilot Relay
RES	—	Resistor
S	—	Compressor Motor Start Contactor
SMM	—	Starter Management Module
T	—	Motor Terminal
TB	—	Terminal Board
T.C.	—	Timed Closed
X	—	Variable
XDCR	—	DC Signal Output Watt Transducer

Dry Contact

Field Wiring

Carrier Wiring

Carrier Specified Device

Optional Feature

NOTES:

1. Load sensing resistor to provide 0.5 volts at rated load amps.
2. SMM “O” motor current resistor.
3. IQ-1000-II Features: (refer to IQ manual for details)
   IQ AUX TRIP CONTACT set for ground fault only.
   IQ TRIP CONTACT set for remaining protection features.
   IQ TRIP MODE 2.
   IQ TRANSITION CONTACT TR (Start to Run).
   IQ Incomplete Sequence Feedback contact 2M.
4. Power factor correction capacitors (when required) are connected ahead of all current transformers for proper calibration and sensing by the IQ devices.
5. Oil pump circuit breaker (when required).
6. IQ-DATA PLUS-II TRIP CONTACT (when option is furnished).

INDEX

Abbreviations and Explanations, 4
Adding Refrigerant, 55
Adjusting the Refrigerant Charge, 55
After Extended Shutdown, 51
After Limited Shutdown, 51
Attach to Network Device Control, 34
Automatic Soft Stop Amps Threshold, 37
Auto. Restart After Power Failure, 30
Before Initial Start-Up, 37
Calibrate Motor Current Demand Setting, 49
Capacity Override, 28
Carrier Comfort Network Interface, 44
Changing Oil Filter, 56
Charge Refrigerant Into Chiller, 47
Chilled Water Recycle Mode, 37
Chiller Dehydration, 41
Chiller Familiarization, 5
Chiller Information Plate, 5
Chiller Operating Condition (Check), 50
Chiller Tightness (Check), 38
Chillers with Isolation Valves, 54
Chillers with Storage Tanks, 53
Cold Weather Operation, 51
Compressor Bearing and Gear Maintenance, 57
Condenser, 5
Condenser Freeze Prevention, 29
Condenser Pump Control, 29
Control Algorithms Checkout Procedure, 61
Control Center, 5, 56
Control Modules, 71
Control Test, 61
Controls, 10
Cooler, 5
Default Screen Freeze, 28
Definitions (Controls), 10
Demand Limit Control Option, 30
Design Set Points, (Input), 45
Details (Lubrication Cycle), 8
Display Messages (Check), 59
Dry Run to Test Start-Up Sequence, 49
Equipment Required, 37
Extended Shutdown, 51
Factory-Mounted Starter, 7
General (Controls), 10
General Maintenance, 55
Guide Vane Linkage (Check), 55
Heat Exchanger Tubes (Inspect), 58
High Altitude Locations, 47
High Discharge Temperature Control, 29
Ice Build Control, 33
Initial Start-Up, 48
Instruct the Customer Operator, 50
Introduction, 4
Job Data Required, 37
Lead/Lag Control, 31
Leak Rate, 55
Leak Test Chiller, 38
LID Operation and Menus, 13
Local Occupied Schedule (Input), 45
Local Start-Up, 36
Lubrication Cycle, 8
Lubrication System (Check), 56
Manual Guide Vane Operation, 51
Manual Operation of the Guide Vanes, 49
Motor-Compressor, 5
Motor/Oil Refrigeration Cooling Cycle, 7
Notes on Module Operation, 71
Oil Changes, 57
Oil Charge, 44
Oil Cooler, 29
Oil Pressure and Compressor Stop (Check), 49
Oil Reclaim Filter, 57
Oil Reclaim System, 8
Oil Specification, 57
Oil Sump Temperature Control, 29
Open Oil Circuit Valves, 38
Operating Instructions, 50
Operating the Optional Pumpout Unit, 51
Operator Duties, 50
Optional Pumpout System Maintenance, 58
Options Modules, 72
Ordering Replacement Chiller Parts, 59
Overview (Troubleshooting Guide), 59
Physical Data, 77
PIC System Components, 10
PIC System Functions, 26
Power Up the Controls and Check the Oil Heater, 44
Pumpout Compressor Water Piping (Check), 43
Pumpout System Controls and Compressor (Check), 47
Preparation (Initial Start-Up), 48
Preparation (Pumpout and Refrigerant Transfer Procedures), 51
Prepare the Chiller for Start-Up, 50
Pressure Transducers (Check), 58, 60
Prevent Accidential Start-Up, 49
Processor Module, 72
Pumpout and Refrigerant Transfer Procedures, 51
Ramp Loading Control, 28
Refrigerant Filter, 57
Refrigerant Float System (Inpsect), 57
Refrigerant Leak Testing, 55
Refrigerant Properties, 55
Refrigerant (Removing), 55
Refrigerant Tracer, 38
Refrigeration Cycle, 7
Refrigeration Log, 51
Relief Devices (Check), 43
Relief Valves and Piping (Inspect), 57
Remote Start/Stop Controls, 29
Repair the Leak, Retest, and Apply Standing Vacuum Test, 55
Replacing Defective Processor Modules, 73
Rotation (Check), 49
Running System (Check), 50
Safety and Operating Controls (Check Monthly), 56
Safety Considerations, 1
Safety Controls, 26
Safety Shutdown, 37
Scheduled Maintenance, 56
Service Configuration (Input), 45
Service Ontime, 56
Service Operation, 35
Set Up Chiller Control Configuration, 45
Shipping Packaging (Remove), 38
Shunt Trip (Option), 28
Shutdown Sequence, 36
Solid-State Starters, 74
Spare Safety Alarm Contacts, 29
Spare Safety Inputs, 29
Standing Vacuum Test, 41
Starter (Check), 44
Starter Management Module, 72
Starting Equipment, 8, 58
Start-Up/Shutdown/Recycle Sequence, 36
Start the Chiller, 50
Stop the Chiller, 50
Storage Vessel, 7
Summary (Lubrication Cycle), 8

Surge Prevention Algorithm, 30
Surge Protection, 31
System Components, 5
Temperature Sensors (Check), 59
Test After Service, Repair, or Major Leak, 55
Tighten All Gasketed Joints and Guide Vane Packing, 38
Tower Fan Relay, 29
Trim Refrigerant Charge, 56
Troubleshooting Guide, 59
Unit Mounted Solid-State Starter, 9
Unit Mounted Wye-Delta Starter, 10
Using the Optional Storage Tank and Pumpout System, 38
Water/Brine Reset, 30
Water Leaks, 58
Water Piping (Inspect), 43
Water Treatment, 58
Weekly Maintenance, 56
Wiring (Inspect), 43

Copyright 1996 Carrier Corporation