Controls Start-Up, Operation, Service, and Troubleshooting

SAFETY CONSIDERATIONS

Installing, starting up, and servicing this equipment can be hazardous due to system pressures, electrical components, and equipment location (roof, elevated structures, etc.). Only trained, qualified installers and service mechanics should install, start up, and service this equipment.

When working on this equipment, observe precautions in the literature, and on tags, stickers, and labels attached to the equipment, and any other safety precautions that apply. Follow all safety codes. Wear safety glasses and work gloves. Use care in handling, rigging, and setting this equipment, and in handling all electrical components.

⚠ WARNING

Electrical shock can cause personal injury and death. Shut off all power to this equipment during installation and service. There may be more than one disconnect switch. Tag all disconnect locations to alert others not to restore power until work is completed.

⚠ WARNING

This unit uses a microprocessor-based electronic control system. Do not use jumpers or other tools to short out components, or to bypass or otherwise depart from recommended procedures. Any short-to-ground of the control board or accompanying wiring may destroy the electronic modules or electrical components.

⚠ WARNING

To prevent potential damage to heat exchanger tubes always run fluid through heat exchangers when adding or removing refrigerant charge. Use appropriate brine solutions in cooler and condenser fluid loops to prevent the freezing of heat exchangers when the equipment is exposed to temperatures below 32 F (0° C).

DO NOT VENT refrigerant relief valves within a building. Outlet from relief valves must be vented outdoors in accordance with the latest edition of ANSI/ASHRAE (American National Standards Institute/American Society of Heating, Refrigeration and Air Conditioning Engineers) 15 (Safety Code for Mechanical Refrigeration). The accumulation of refrigerant in an enclosed space can displace oxygen and cause asphyxiation. Provide adequate ventilation in enclosed or low overhead areas. Inhalation of high concentrations of vapor is harmful and may cause heart irregularities, unconsciousness or death. Misuse can be fatal. Vapor is heavier than air and reduces the amount of oxygen available for breathing. Product causes eye and skin irritation. Decomposition products are hazardous.

⚠ WARNING

DO NOT attempt to unbraze factory joints when servicing this equipment. Compressor oil is flammable and there is no way to detect how much oil may be in any of the refrigerant lines. Cut lines with a tubing cutter as required when performing service. Use a pan to catch any oil that may come out of the lines and as a gage for how much oil to add to system. DO NOT re-use compressor oil. Do NOT leave refrigerant system open to air any longer than necessary. Seal circuits being serviced and charge with dry nitrogen to prevent oil contamination when timely repairs cannot be completed.

CONTENTS

Page
SAFETY CONSIDERATIONS 1
GENERAL 2,3
MAJOR SYSTEM COMPONENTS 3,4
Main Base Board (MBB) 3
Screw Compressor Board (SCB) 3
Electronic Expansion Device (EXD) Board 3
***Comfort*Link Compressor Protection (CCP) Board** 3
Energy Management Module (EMM) 3
Enable/Off/Remote Connect Switch 3
Emergency On/Off Switch 3
Board Addresses 3
Control Module Communication 3
Carrier Comfort Network (CCN) Interface 3
OPERATION DATA 4-38
Electronic Expansion Device (EXD) 4
- EXV OPERATION
- ECONOMIZER OPERATION

Oil Pumps 4
Motor Cooling 5
Back Pressure Valve (30GXN,R and 30HXA only) 5
Sensors 5
***Comfort*Link Compressor Protection (CCP) Board** 6
- OUTPUTS
- INPUTS

Wye-Delta vs Across-the-Line (XL) Starting Option 7
Capacity Control 7
- MINUTES LEFT FOR START
- MINUTES OFF TIME
- LOADING SEQUENCE
- CLOSE CONTROL
- LEAD/LAG DETERMINATION
- CAPACITY SEQUENCE DETERMINATION
- MINIMUM LOAD VALVE
- CAPACITY CONTROL OVERRIDES

Manufacturer reserves the right to discontinue, or change at any time, specifications or designs without notice and without incurring obligations.

CONTENTS (cont)

Page

Head Pressure Control 10
- GENERAL
- AIR-COOLED UNITS (30GXN,R)
- WATER-COOLED UNITS (30HXC)
- CONDENSERLESS UNITS (30HXA)
- 09DK CONDENSING UNITS
- ADJUSTING PID ROUTINES

Control Methods 16
- SWITCH
- 7-DAY SCHEDULE
- OCCUPANCY
- CCN

Cooling Setpoint Select 16
Ice Mode 16
Cooler and Condenser (30HXC) Pump Control 16
- COOLER PUMP CONTROL
- CONDENSER PUMP CONTROL

Flow Sensor 17
Cooler Heater Control 17
Oil Heater Control 17
Navigator Display Module Usage 17
Service Test 17
Configuring and Operating Dual Chiller Control 18
Alarms/Alerts 34
Run Hours and Starts 34
Temperature Reset 34
Demand Limit 36
- DEMAND LIMIT (2-Stage Switch Controlled)
- EXTERNALLY POWERED DEMAND LIMIT
- DEMAND LIMIT (CCN Loadshed Controlled)

Cooling Set Point (4 to 20 mA) 36
TROUBLESHOOTING 38-49
Checking Display Codes 38
Unit Shutoff 38
Complete Unit Stoppage 38
Single Circuit Stoppage 38
Restart Procedure 39
- POWER FAILURE EXTERNAL TO THE UNIT

Alarms and Alerts 39
Compressor Alarm/Alert Circuit 39
EXV Troubleshooting Procedure 48
- INSPECTING/OPENING ELECTRONIC EXPANSION VALVES
- INSPECTING/OPENING ECONOMIZERS

SERVICE 50-65
Servicing Coolers and Condensers 50
- TUBE PLUGGING
- RETUBING
- TIGHTENING COOLER/CONDENSER HEAD BOLTS

Inspecting/Cleaning Heat Exchangers 50
- COOLERS
- CONDENSERS (30HX Only)

Water Treatment 51
Condenser Coils (30GXN,R Only) 51
- COIL CLEANING
- CLEANING E-COATED COILS

Condenser Fans (30GXN,R Only) 52
Refrigerant Charging/Adding Charge 53
Oil Charging/Low Oil Recharging 54
Oil Filter Maintenance 54
- REPLACING THE EXTERNAL OIL FILTER
- REPLACING THE INTERNAL OIL FILTER

Compressor Changeout Sequence 55
- BURNOUT CLEAN-UP PROCEDURE

Moisture-Liquid Indicator 57
Filter Drier 57

Page

Liquid Line Service Valve 57
Thermistors 57
- LOCATION
- THERMISTOR REPLACEMENT

Pressure Transducers 60
- TROUBLESHOOTING
- FLOW SENSOR

Safety Devices 63
- COMPRESSOR PROTECTION
- OIL SEPARATOR HEATERS (30GX)
- COOLER PROTECTION

Relief Devices 63
- PRESSURE RELIEF VALVES

Control Modules 63
- MAIN BASE BOARD (MBB), SCREW COMPRESSOR BOARD (SCB), EXPANSION VALVE BOARD (EXV), ENERGY MANAGEMENT MODULE (EMM), *COMFORT*LINK™ COMPRESSOR PROTECTION BOARD (CCP), AND THE NAVIGATOR
- RED LED
- GREEN LED
- YELLOW LED

Carrier Comfort Network (CCN) Interface 64
Replacing Defective Processor Module 64
Winter Shutdown Preparation 65
Maintenance 65
PRE-START-UP PROCEDURE 66
System Check 66
START-UP AND OPERATION 66
Actual Start-up 66
Operating Sequence 66
FIELD WIRING 67-69
APPENDIX A (Compressor Must Trip Amps) 70-76
APPENDIX B (Capacity Loading Sequence) 77-81
APPENDIX C (Available Accessories) 82,83
APPENDIX D (Building Interface) 84-86
APPENDIX E (Cooler and Condenser Pressure Drop) 87-92
APPENDIX F (Typical System Components) 93,94
APPENDIX G (CCN Configuration) 95-107
APPENDIX H (30GXN,R Duplex Combinations) . . 108
APPENDIX I (Motormaster® V Operation Instructions) 109-111
APPENDIX J (Maintenance Log) 112
START-UP CHECKLIST (For 30GX,HX Liquid Chiller) . . . . . CL-1 to CL-10

GENERAL

IMPORTANT: These units use refrigerant R-134a. Compressor oil used with R-134a is Castrol Icematic SW-220, Carrier Specification #PP47-32.

This publication contains Start-Up, Service, Controls, Operation and Troubleshooting data for the 30GXN,R080-528 and 30HXA,C076-271 screw chillers.

Circuits are identified as circuits A and B, and compressors are identified as A1 or A2 in circuit A, and B1 or B2 in circuit B. Refer to Appendix H for Duplex unit combinations.

The 30GXN,GXR,HX Series chillers feature microprocessor-based electronic controls and electronic expansion devices (EXD) in each refrigeration circuit.

The control system cycles compressor loaders and/or compressors to maintain the selected leaving fluid temperature set point. The system automatically positions the EXD to maintain

the specified refrigerant level in the cooler. The system also has capabilities to control a condenser water valve to maintain suitable leaving-water temperature for the 30HXC unit. Safeties are continuously monitored to prevent the unit from operating under unsafe conditions. A scheduling function can be programmed by the user to control the unit's occupied and unoccupied schedules. The control also operates a test function and a manual control function that allows the operator to check output signals and ensure components are operable.

MAJOR SYSTEM COMPONENTS

Main Base Board (MBB) — This board contains the majority of the control system operating software and controls the operation of the machine. It has 11 input channels and 11 output channels.

The MBB continuously monitors input/output channel information received from all the modules and controls all output signals for all output channels. The processor module also controls the EXD driver module, commanding it to open or close each EXD in order to maintain the proper cooler level. Information is transmitted between the MBB; *Comfort*Link™ Compressor Protection (CCP) boards, the EXD driver module, the Screw Compressor Board (SCB), the Energy Management Module (EMM) and the Navigator modules through a 3-wire communications bus called the Local Equipment Network (LEN). The remote enhanced display is connected to the MBB through a 3-wire communications bus, but uses a different communication bus called the Carrier Comfort Network (CCN). The CCN bus is also used to communicate to other CCN devices when the unit is installed in a network application.

Screw Compressor Board (SCB) — The SCB has 8 inputs along with 2 analog and 5 discrete outputs. The SCB module communicates the status of the inputs with the MBB and operates the oil heater (30GXN,R only), cooler heater (30GXN,R only) and oil pump outputs.

Electronic Expansion Device (EXD) Board — The EXD board has 2 inputs and 2 outputs. It receives signals from the MBB and operates the electronic expansion devices. The electronic expansion device board also sends the MBB the status of its 2 input channels.

***Comfort*Link Compressor Protection (CCP) Board —** The CCP board monitors the high-pressure switch status, running current and motor temperature for each compressor. Each CCP board controls up to 2 compressors. The CCP board also controls the motor cooling solenoid, oil solenoid and contactor outputs. A pre-punched configuration header for each compressor determines the must trip amps setting. Each CCP board sends the MBB each compressor's motor temperature, relay status and running current as a percentage of the must trip amps value. The CCP board also communicates any alarm conditions as the feedback value.

Energy Management Module (EMM) — The EMM is available as a factory-installed option or as a field-installed accessory. The EMM receives 4 to 20 mA inputs for the temperature reset, cooling set point reset and demand limit functions. The EMM also receives the switch inputs for the field-installed 2-stage demand limit and ice done functions. The EMM communicates the status of all inputs with the MBB, and the MBB adjusts the control point, capacity limit, and other functions according to the inputs received.

Enable/Off/Remote Contact Switch — The Enable/Off/Remote Contact switch is a 3-position switch used to control the chiller. (See Table 1.) When switched to the Enable position the chiller is under its own control. Move the switch to the Off position to shut the chiller down. Move the switch to the Remote Contact position and a field-installed dry contact can be used to start the chiller. The contacts must be capable of handling a 24-vac, 20-mA load. In the Enable and Remote Contact (dry contacts closed) positions, the chiller is allowed to operate and respond to the scheduling configuration, CCN configuration and set point data.

Emergency On/Off Switch — The Emergency On/Off switch should only be used when it is required to shut the chiller off immediately. Power to the MBB, EMM, EXV, SCB and Navigator display is interrupted when this switch is off and all outputs from these modules will be turned off.

Board Addresses — The Main Base Board (MBB) has an Instance jumper that must be set to '1'. The EXV, SCB and EMM boards have 4-position DIP switches that must be set to 'On' for all boards. The CCP address has a 4-position DIP switch. Switches 3 and 4 set the address.

Control Module Communication

RED LED — Proper operation of the control boards can be visually checked by looking at the red status LEDs (light-emitting diodes). When operating correctly, the red status LEDs should be blinking in unison at a rate of once every 2 seconds. If the red LEDs are not blinking in unison, verify the board address and that correct power is being supplied to all modules. Be sure that the Main Base Board (MBB) is supplied with the current software. If necessary, reload current software. If the problem still persists, replace the MBB. A board LED that is lit continuously or blinking at a rate of once per second or faster indicates that the board should be replaced.

GREEN LED — The MBB has one green LED. The Local Equipment Network (LEN) LED should always be blinking whenever power is on. All other boards have a LEN LED that should be blinking whenever power is on. Check LEN connections for potential communication errors at the board J3 and/or J4 connectors. Communication between modules is accomplished by a 3-wire bus. These 3 wires run in parallel from module to module. The J5 connector on the MBB provides both power and communication directly to the Navigator.

YELLOW LED — The MBB has one yellow LED. The Carrier Comfort Network (CCN) LED will blink during times of network communication.

Carrier Comfort Network (CCN) Interface — The 30GXN,R and 30HX chiller units can be connected to the CCN if desired. The communication bus wiring is a shielded, 3-conductor cable with drain wire and is supplied and installed in the field. The system elements are connected to the communication bus in a daisy chain arrangement. The positive pin of each system element communication connector must be wired to the positive pins of the system elements on either side of it. This is also required for the negative and signal ground pins of each system element. Wiring connections for CCN should be made at TB3. Consult the CCN Contractor's Manual for further information.

NOTE: Conductors and drain wire must be 20 AWG (American Wire Gage) minimum stranded, tinned copper. Individual conductors must be insulated with PVC, PVC/nylon, vinyl, Teflon, or polyethylene. An aluminum/polyester 100% foil shield and an outer jacket of PVC, PVC/nylon, chrome vinyl, or Teflon with a minimum operating temperature range of –20 C to 60 C is required. Wire manufactured by Alpha (2413 or 5463), American (A22503), Belden (8772), or Columbia (02525) meets the above mentioned requirements. It is important when connecting to a CCN communication bus that a color-coding scheme be used for the entire network to simplify the installation. It is recommended that red be used for the signal positive, black for the signal negative and white for the signal ground. Use a similar scheme for cables containing different colored wires. At each system element, the shields of its communication bus cables must be tied together. If the communication bus is entirely within one building, the resulting continuous shield must be connected to a ground at one point

only. If the communication bus cable exits from one building and enters another, the shields must be connected to grounds at the lightning suppressor in each building where the cable enters or exits the building (one point per building only).

To connect the unit to the network:

1. Turn off power to the control box.
2. Cut the CCN wire and strip the ends of the red (+), white (ground), and black (–) conductors. (Substitute appropriate colors for different colored cables.)
3. Connect the red wire to (+) terminal on TB3, the white wire to COM terminal, and the black wire to the (–) terminal.
4. The RJ-14 CCN connector on TB3 can also be used, but is only intended for temporary connection (for example: a laptop computer running Service Tool).

Table 1 — Unit Mode from Control/Enable/Off/ Remote Contact and CCN State

SWITCH POSITION	REMOTE CONTACTS	CCN CONFIGURATION	CCN STATE	UNIT MODE
ENABLE	NR	DISABLE	NR	LOCAL ON
		ENABLE	RUN	CCN ON
			STOP	CCN OFF
OFF	NR	NR	NR	LOCAL OFF
REMOTE CONTACT	OPEN	NR	NR	LOCAL OFF
	CLOSED	DISABLE	NR	LOCAL ON
		ENABLE	RUN	CCN ON
			STOP	CCN OFF

LEGEND

CCN — Carrier Comfort Network
NR — Input Not Read by Processor

NOTE: If the unit is configured for a clock, then the unit is under clock control if it is in an ON mode.

OPERATION DATA

Electronic Expansion Device (EXD) — The MBB controls the EXD through the EXV module. The EXD will either be an EXV (electronic expansion valve) or an economizer. Inside both these devices is a linear actuator stepper motor.

EXV OPERATION — High-pressure liquid refrigerant enters the valve through the bottom. A series of calibrated slots are located inside the orifice assembly. As refrigerant passes through the orifice, the pressure drops and the refrigerant changes to a 2-phase condition (liquid and vapor). To control refrigerant flow for different operating conditions, the sleeve moves up and down over the orifice, thereby changing orifice size. The sleeve is moved by a linear stepper motor. The stepper motor moves in increments and is controlled directly by the processor module. As the stepper motor rotates, motion is transferred into linear movement by the lead screw. Through the stepper motor and lead screw, 1500 discrete steps of motion are obtained. The large number of steps and long stroke result in very accurate control of refrigerant flow.

Each circuit has a liquid level sensor mounted vertically in the top of the cooler shell. The level sensor consists of a small electric resistance heater and 3 thermistors wired in series, positioned at different heights inside the body of the well. The heater is designed so that the thermistors read approximately 200 F (93.3 C) in dry air. The nominal resistance of the electric heater is 31 ohms. As the refrigerant level rises (falls) in the cooler, the resistance of the closest thermistor(s) will increase (decrease) as it is cooled by the rising liquid refrigerant (heated by the heater). This large resistance difference allows the control to accurately maintain a specified level.

The level sensor monitors the refrigerant liquid level in the cooler and sends this information to the MBB through LEN communication with the SCB. At initial start-up, the EXV position is at zero. After that, the microprocessor keeps accurate track of the valve position in order to use this information as input for the other control functions. The processor does this by initializing the EXVs at start-up. The processor sends out enough closing pulses to the valve to move it from fully open to fully closed, then resets the position counter to zero. From this point, until the next initialization, the processor counts the total number of open and closed steps it has sent to each valve.

ECONOMIZER OPERATION — Economizers are factory installed on 30GXN,R108-350 (except sizes 114, 150) and associated modular units and 30HXA,C161-271 units. All other sizes use standard EXVs. The economizer improves the chiller capacity and efficiency as well as providing compressor motor cooling. Inside the economizer are both a linear stepper motor (same as standard EXV motor) and a float valve. The stepper motor is controlled by the processor to maintain the desired liquid level in the cooler (as is done for chillers without economizers). The float valve maintains a liquid level in the bottom of the economizer.

Liquid refrigerant is supplied from the condenser to the bottom of the economizer. A bubbler tube supplies a small amount of discharge gas to ensure that the float will be able to work properly. As the refrigerant passes through the EXD, its pressure is reduced to an intermediate level of approximately 75 psig (517 kPag). This pressure is maintained inside the economizer shell. Next, the refrigerant flows through the float valve where its pressure is further reduced to slightly above the pressure in the cooler.

The increase in performance is achieved when some of the refrigerant passing through the EXD flashes to vapor, further subcooling the liquid that is maintained at the bottom of the economizer. This increase in subcooling provides additional capacity. Also, since the additional power required to accomplish this is minimal; the efficiency of the machine improves. The vapor that flashes rises to the top of the economizer where it passes to the compressor and is used to provide motor cooling. After passing over the motor windings, the refrigerant reenters the cycle at an intermediate port in the compression cycle.

Oil Pumps — The 30GXN,GXR,HX screw chillers use one externally mounted prelubricating oil pump per circuit. This pump is operated as part of the start-up sequence. On 30GXN,R units, the pumps are mounted to the base rails on the oil separator side of the unit. The pumps are mounted to a bracket on the condensers of 30HXC units and to the oil separator on 30HXA units.

When a circuit is required to start, the controls energize the oil pump first and read the oil pressure transducer reading. The pump is operated for a period of 20 seconds, after which the oil solenoid is energized to open the oil inlet valve at the compressor. The control again reads the pressure from the oil pressure transducer. If the pump has built up sufficient oil pressure, the compressor is allowed to start after 15 seconds.

Once the compressor has started, the oil pump will continue to run for 120 seconds.

If the pump is not able to build up enough oil pressure, the pump is turned off. Within 3 seconds, the pump is re-energized and makes two additional attempts, if necessary, to build oil pressure. The control generates an alarm if the third attempt fails.

The oil pump is also used to supplement system pressure under certain operating conditions. The oil flow requirements of the compressor vary based on pressure differential across the compressor. The oil pump is designed to provide differential oil pressure during low pressure differential conditions. It is not designed to overcome high pressure drop across filters during high pressure differential conditions.

If the differential oil pressure (oil pressure – economizer pressure) for a compressor is too low the oil pump will be started. Just before the oil pump is started the control measures the pressure differential between the discharge pressure and oil

pressure (oil system pressure drop). The oil system pressure drop is saved and used to determine when the oil pump should be shut off.

When the oil pump is operating, it is capable of increasing oil pressure from 0 psi to 50 psi depending on the oil flow requirements of the compressor. For example, if the compressor needs 2 gpm (high pressure differential condition) and the oil pump is capable of 1.2 gpm, there is no pressure rise and the oil flow will bypass the check valve and supply the 2 gpm to the compressor. If the compressor requires .75 gpm, the oil pump will increase pressure to satisfy the oil pressure requirement.

The pump will continue to operate until the discharge pressure minus economizer pressure is greater then 17 psi plus the oil system pressure drop.

Example:

Discharge pressure	80 psi
Oil pressure	65 psi
Oil system pressure drop	80 – 65 = 15 psi
Economizer pressure	55 psi
Differential oil pressure	(65 – 55) = 10 psi
Suction pressure	40 psi

Based on the above conditions the oil pump will be started because differential oil pressure equals 10 psi. See Chart below.

SUCTION PRESSURE (SP)	OIL PUMP TURNS ON WHEN DIFFERENTIAL PRESSURE IS LESS THAN:
≤ 35 psig	12 psig
35 psig < SP < 51 psig	14.5 psig
≥ 51 psig	17 psig

The oil pump will continue to operate until the discharge pressure minus economizer pressure (which equals 25) is greater than 17 plus 15 (oil system loss before pump was started). The only way this can be satisfied is if the discharge pressure increases or the compressor unloads at which point the oil pump will be shut off.

Motor Cooling — Compressor motor winding temperatures are controlled to a set point of 200 F (93.3 C). The control accomplishes this by cycling the motor cooling solenoid valve to allow liquid refrigerant to flow across the motor windings as needed. On units equipped with economizers, flash gas leaves the top of the economizer and continually flows to the motor windings. All refrigerant used for motor cooling re-enters the rotors through a port located midway along the compression cycle and is compressed to discharge pressure.

Back Pressure Valve (30GXN,R and 30HXA only) — This valve is located on the oil separator outlet on 30GXN,R units and mounted on the oil separator shell of 30HXA units. The valve's function is to ensure that there is sufficient system differential pressure to allow for oil to be driven back to the compressor. A small copper line (economizer pressure) is connected to the top of the valve, which contains an internal spring that closes a piston if the pressure in the oil separator is not at least 15 psig greater than the economizer pressure.

Sensors — The 30GXN,GXR,HX *Comfort*Link™ control system gathers information from sensors to control the operation of the chiller. The units use up to 10 standard pressure transducers, up to 8 standard thermistors (including 4 motor temperature thermistors), and 2 liquid level thermistors to monitor and control system operation. The sensors are listed in Table 2.

Table 2 — Thermistor and Transducer Locations

THERMISTORS			
Sensor	**Description**	**Location**	**Connection Terminals**
T1	Cooler Leaving Fluid Temp	Cooler Head Leaving Fluid Side	MBB, J8-13,14
T2	Cooler Entering Fluid Temp	Cooler Head Entering Fluid Side	MBB, J8-11,12
Motor Temp A1	Motor Temperature A1	Compressor A1 Junction Box	CCP1, plug J5
Motor Temp A2*	Motor Temperature A2	Compressor A2 Junction Box	CCP2, plug J5
Motor Temp B1	Motor Temperature B1	Compressor B1 Junction Box	CCP1, plug J9
Motor Temp B2†	Motor Temperature B2	Compressor B2 Junction Box	CCP2, plug J9
T5	Discharge Gas Temp A	Top of Oil Separator Circuit A	EXV, J5-11,12
T6	Discharge Gas Temp B	Top of Oil Separator Circuit B	EXV, J5-9,10
LL-A (T3)	Liquid Level Circuit A	Top of Cooler Circuit A	SCB, J5-10,11
LL-B (T4)	Liquid Level Circuit B	Top of Cooler Circuit B	SCB, J5-13,14
T9 (optional)**	Outdoor Air Thermistor/Dual LWT	Outside Air Stream/Common Leaving Fluid	TB5, terminals 7,8
T10 (optional)**	Space Temperature	Conditioned Space	TB5, terminals 5,6
COND EWT (optional)**	Condenser Entering Water Thermistor	Condenser Entering Fluid Line	TB2, terminals 1,2
COND LWT (optional)**	Condenser Leaving Water Thermistor	Condenser Leaving Fluid Line	TB2, terminals 3,4
PRESSURE TRANSDUCERS			
Sensor	**Description**	**Location**	**Connection Terminals**
DPT-A	Discharge Pressure Circuit A	Top of Condenser Separator Circuit A	MBB, J8-21,22,23
SPT-A	Suction Pressure Circuit A	Top of Cooler Circuit A	MBB, J8-24,25,26
EPT-A	Economizer Pressure Circuit A	Economizer Line Entering Comp A	SCB, J5-7,8,9
OPT-A1	Oil Pressure Compressor A1	Compressor A1 Oil Connection	SCB, J5-4,5,6
OPT-A2*	Oil Pressure Compressor A2	Compressor A2 Oil Connection	SCB, J5-1,2,3
DPT-B	Discharge Pressure Circuit B	Top of Oil Separator Circuit B	MBB, J8-15,16,17
SPT-B	Suction Pressure Circuit B	Top of Cooler Circuit B	MBB, J8-18,19,20
EPT-B	Economizer Pressure Circuit B	Economizer Line Entering Comp B	SCB, J6-7,8,9
OPT-B1	Oil Pressure Compressor B1	Compressor B1 Oil Connection	SCB, J6-4,5,6
OPT-B2†	Oil Pressure Compressor B2	Compressor B1 Oil Connection	SCB, J6-1,2,3

*30HX206-271 and 30GXN,R204-350, 365-450 only.
†30GXN,R281-350 only.
**Sensors are available as accessories for field installation.

***Comfort*Link™ Compressor Protection (CCP) Board —** One CCP board controls up to 2 compressors. The CCP provides the following functions:

- compressor main contactor control
- Wye-Delta contactor transition
- compressor ground current protection
- motor temperature reading
- high-pressure protection
- reverse rotation protection
- current imbalance protection
- compressor oil solenoid control
- motor cooling solenoid control
- LEN communications
- starting and running overcurrent protection

The CCP has the following 4 output relays and 3 inputs:

OUTPUTS:

- compressor contactor
- compressor oil solenoid
- compressor motor cooling solenoid
- Wye-Delta transition relay

INPUTS:

- motor temperature
- three-phase current
- high-pressure switch

A diagram of the CCP board is shown in Fig. 1. One CCP board is installed on 30GXN,R080-178 and 30HXA,C076-186 units and two CCP boards are installed on 30GXN,R204-350 and 30HXA,C206-271 units. The address for each CCP board is set using DIP (dual in-line package) switches. For CCP1 (compressor A1 and B1), DIP switch 1 should be set to 'L' ('On' position for LEN communication). Switches 2, 3 and 4 should be set to '0' ("OFF" position). For CCP2 (compressor A2 for 30GXN,R204-268 and 30HXA,C206-271 and compressor B2 for 30GXN,R281-350), switch 1 should be set to 'L' and switches 3 and 4 should be set to '1' ("ON" position). Switch 2 should be set to '0' ("OFF" position). See Table 3 for CCP board connections. The CCP has a reset button located between the DIP switch and the J10 connector.

Each compressor's MTA (must trip amps) setting is communicated to the MBB during the initialization period. See Table 4 for DIP switch settings.

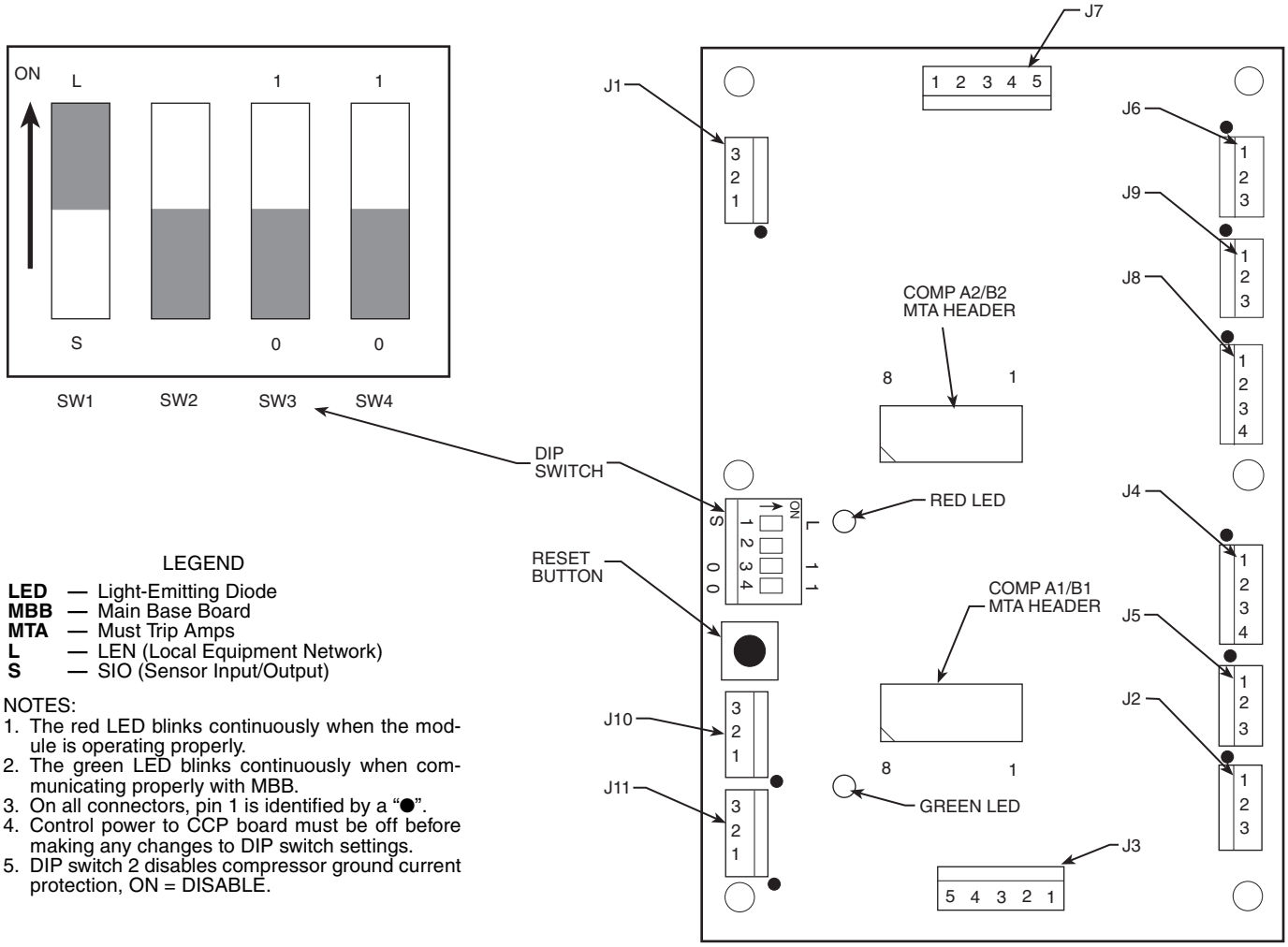

LEGEND

LED — Light-Emitting Diode
MBB — Main Base Board
MTA — Must Trip Amps
L — LEN (Local Equipment Network)
S — SIO (Sensor Input/Output)

NOTES:

1. The red LED blinks continuously when the module is operating properly.
2. The green LED blinks continuously when communicating properly with MBB.
3. On all connectors, pin 1 is identified by a "●".
4. Control power to CCP board must be off before making any changes to DIP switch settings.
5. DIP switch 2 disables compressor ground current protection, ON = DISABLE.

Fig. 1 — *Comfort*Link™ Compressor Protection (CCP) Board

Table 3 — *Comfort*Link™ Compressor Protection (CCP) Board Plug Connections

CCP PLUG	DESCRIPTION
J1	24-vac Power Input
J2, J6	Compressor Contactor(s)
J3, J7	High Pressure Switch, Oil and Motor Cooling Solenoids
J4, J8	Current Sensor Input
J5, J9	Compressor Motor Temperature Input
J10, J11	Communication Connections

NOTE: Plugs J2-J5 are for compressors A1 (CCP1) or A2 (CCP2). Plugs J6-J9 are for compressor B1 (CCP1) or B2 (CCP2).

Table 4 — CCP Address DIP Switch Settings

UNIT	CCP1				CCP2			
	1	2	3	4	1	2	3	4
30GXN,R080-178 30HXA076-186 30HXC076-186	L	OFF	0	0	—	—	—	—
30GXN,R204-350 30HXA206-271 30HXC206-271	L	OFF	0	0	L	OFF	1	1

To verify proper must trip amps header configuration, use the Navigator and the Configuration mode portion of Appendix A to locate the items CM.A1, CM.A2, CM.B1 and CM.B2 in the UNIT sub-mode. See Appendix A for correct settings. If the values do not match those in Appendix A, verify that the configuration headers have been properly punched out.

The CCP communicates on the LEN (Local Equipment Network) bus to the MBB. Proper operation of the CCP board can be verified by observing the 2 LEDs located on the board. The red LED blinks at a rate of once every 1 to 2 seconds. This indicates that the module is powered and operating correctly. The green LED blinks when the module is satisfactorily communicating with the MBB. The CCP communicates status of its inputs and outputs and reports 13 different alarm conditions to the MBB.

⚠ CAUTION

The CCP module has many features that are specifically designed to protect the compressor, including reverse rotation protection. Do not attempt to bypass or alter any of the factory wiring. Any compressor operation in the reverse direction will result in a compressor failure that will require compressor replacement.

The MBB will generate an alert when it receives an alarm input from the CCP. The alert will be generated as T051, T052, T055, or T056 (for Compressors A1, A2, B1, B2 respectively). Press the ENTER and ESCAPE buttons on the Navigator simultaneously to expand the full meaning of the alert. For example, the Navigator will read: T055 CIRCUIT B, COMPRESSOR 1 FAILURE-HIGH PRESSURE SWITCH TRIP.

The high-pressure switch is wired in series with the relay coils of the 8 relays on the CCP. If this switch opens during operation, all relays on the CCP are deenergized and the compressor is stopped. The failure is reported to the MBB and the processor module locks off the compressor from restarting until the alarm is manually reset.

Wye-Delta vs Across-the-Line (XL) Starting Option — All 30GXN,R and 30HX chillers operating at voltages of 230-3-60, 208/230-3-60 or 230-3-50 (4, 5, or 8 at Position 12 in model number) are supplied with factory-installed Wye-Delta starters. All other voltage options can be ordered with either Wye-Delta or XL starting options. The XL starting method is the most cost effective and simply starts the compressor motor in a Delta configuration (the motors are designed for continuous operation in this configuration) using a single contactor. See Fig. 2. This is the simplest starting method to use and is ideal where starting current does not require limiting.

Where current limitations exist, the Wye-Delta option may be used. See Fig. 3. This option uses a factory-installed starter assembly for each compressor, which consists of 3 contactors labelled 1M, 2M, and S. As the compressor is started, the CCP module energizes contactors 1M and S, which connects and energizes the motor windings in a Wye configuration. The starting current required will be approximately 60% less than that required for an XL start due to the higher impedance of the motor windings when Wye connected. The compressor will attain about 100% of its normal operating speed (approximately 3 to 5 seconds) before the CCP module deenergizes the S contactor and energizes the 2M contactor, switching the compressor windings to a Delta wiring configuration. The S and 2M contactors in the starter assembly are both mechanically and electrically interlocked so that they will not both be energized at the same time.

Do not alter the factory-installed power wiring from the control box terminal block to the compressor junction block. Doing so will cause permanent damage to the compressor and will require that the compressor be replaced.

Capacity Control — The control system cycles compressors, loaders, and minimum load control valves to maintain the user-configured leaving chilled fluid temperature set point. Entering fluid temperature is used by the microprocessor to determine the temperature drop across the cooler and is used in determining the optimum time to add or subtract capacity stages. The chilled fluid temperature set point can be automatically reset by the return fluid temperature, space temperature or outdoor-air temperature reset features. It can also be reset from an external 4 to 20 mA signal (requires optional EMM), or from a network signal.

The capacity control algorithm runs every 30 seconds. The algorithm attempts to maintain the Control Point at the desired set point. Each time it runs, the control reads the entering and leaving fluid temperatures. The control determines the rate at which conditions are changing and calculates 2 variables based on these conditions. Next, a capacity ratio (Z.CLC, Outputs under Sub-mode GEN.O) is calculated using the 2 variables to determine whether or not to make any changes to the current stages of capacity. This ratio value ranges from –100 to + 100%. If the next stage of capacity is a compressor, the control starts (stops) a compressor when the ratio reaches + 100% (–100%). If the next stage of capacity is a loader, the control energizes (deenergizes) a loader when the ratio reaches + 60% (–60%). Loaders are allowed to cycle faster than compressors, to minimize the number of starts and stops on each compressor. A delay of 90 seconds occurs after each capacity step change.

MINUTES LEFT FOR START — This value is displayed in the Status subfunction and represents the amount of time to elapse before the unit is started. This value can be zero without the machine running in many situations. This can include being unoccupied, Remote Contact/Off/Enable switch in the OFF position, CCN not allowing unit to start, Demand Limit in effect, no call for cooling due to no load, and alarm or alert conditions present. If the machine should be running and none of the above are true, a minimum off time may be in effect. The machine should start normally once the time limit has expired.

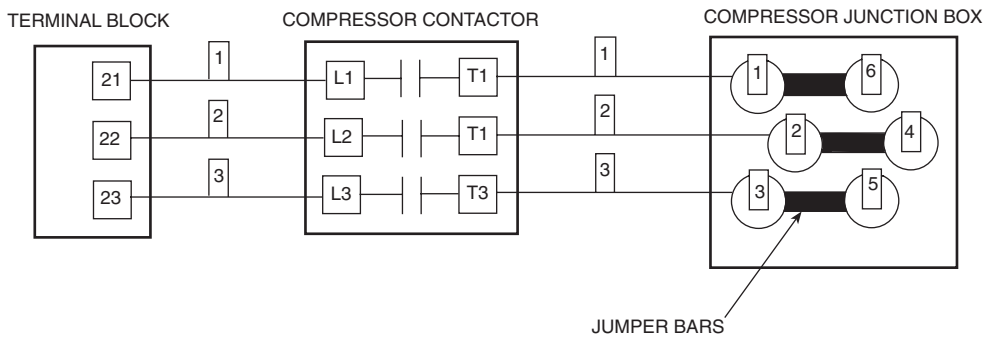

Fig. 2 — Across-the-Line (XL) Compressor Wiring

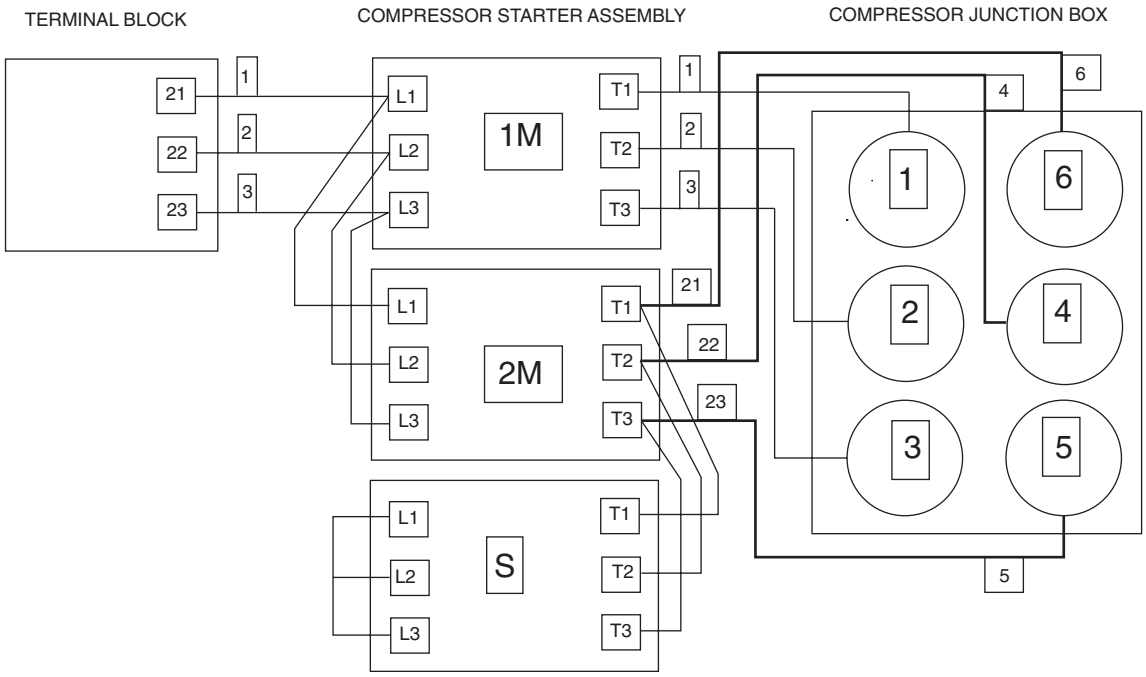

Fig. 3 — Wye-Delta Compressor Wiring

MINUTES OFF TIME (DELY, Configuration mode under sub-mode OPT2) — This user-configurable time period is used by the control to determine how long unit operation is delayed after power is applied/restored to the unit. It is also used to delay compressor restarts after the unit has shut off its lowest stage of capacity. Typically, this time period is configured when multiple machines are located on a single site. For example, this gives the user the ability to prevent all the units from restarting at once after a power failure. A value of zero for this variable does not mean that the unit should be running.

LOADING SEQUENCE — The 30GXN,GXR,HX compressor efficiency is greatest at full load. Therefore, the following sequence list applies to capacity control.

1. The next compressor is not started until all others are running at 100%.
2. The second unloading stage is only used during initial capacity staging of the unit at start-up.
3. Whenever a compressor is started in a circuit, the loaders in the circuit are deenergized for 15 seconds before the compressor is started. The loaders are energized 90 seconds after the compressor is started.

CLOSE CONTROL (CLS.E, Configuration mode under sub-mode OPT2) — When configured for Close Control, the control is allowed to use any loading/capacity control devices required to maintain better leaving fluid temperature regulation. All stages of unloading are available. See Appendix B for an example.

LEAD/LAG DETERMINATION (LLCS, Configuration mode under sub-mode OPT2) — This is a configurable choice and is factory set to be automatic. The value can be changed to Circuit A or Circuit B leading, as desired. Set at automatic, the control will sum the current number of logged circuit starts and one quarter of the current operating hours for each circuit. The circuit with the lowest sum is started first. Changes to which circuit is the lead circuit and which is the lag are made when shutting off compressors.

On 30HX206-271 and 30GXN,R204-350 units set for staged loading, the control fully loads the lead circuit before starting the lag circuit and unloads the lag circuit first. When these units are set for equal loading, the control maintains nearly equal capacities in each circuit when the chiller is loading and unloading.

CAPACITY SEQUENCE DETERMINATION (LOAD, Configuration mode, under sub-mode OPT2) — This is configurable as equal circuit loading or staged circuit loading with the default set at staged. The control determines the order in which the steps of capacity for each circuit are changed. This control choice does NOT have any impact on machines with only 2 compressors.

MINIMUM LOAD VALVE (MLV, Configuration mode under sub-mode OPT1) — When this option is installed and configured, the first stage of capacity is altered by energizing the Minimum Load valve relay. Once the control requires more capacity, the minimum load valve is deenergized and normal capacity staging resumes with loaders and compressors. Similarly, the Minimum Load valve relay will be energized for the last stage of capacity to be used before the circuit is shut down.

Configure Unit for Minimum Load Control — The chiller must be configured for minimum load control operation. This may be done using the Navigator. Set the Enable/Off/Remote Contact switch in the Off position.

1. Press ESCAPE until 'Select a Menu Item' is displayed.
2. Press ▼ to illuminate the Configuration mode LED.
3. Press ENTER and ▼ to select 'OPT1'. Press ENTER and then ▼ to select 'MLV'.
4. Press ENTER and enter the Password (use arrow keys and press ENTER for each digit) if required.
5. Use ▲ to change the flashing 'No' to 'Yes'. Press ENTER and the display says 'MLV Yes'.

The chiller is now configured for minimum load valve control.

Test Minimum Load Relay Outputs — After the unit is configured, test the operation of the relay and solenoid valve using the Service Test mode.

1. Switch the Enable/Off/Remote Contact switch to the 'Off' position.
2. Press ESCAPE on the Navigator to display 'Select a Menu Item' and press ▼ to illuminate the Service Test LED.
3. Press ENTER and 'TEST OFF' will be displayed.
4. Press ENTER (enter Password if required), ▲ and then ENTER to display 'TEST ON'.
5. Switch the EOR (Enable/Off/Remote Contact) switch to the "Enable" position.
6. Press ▼ to select 'COMP' and press ENTER.
7. Press ▼ to select 'MLV OFF'. Press ENTER followed by ▲ and ENTER again. The minimum load valve output will be turned on. Both circuits' solenoids are turned on at the same time.
8. Press ENTER, followed by ▼ and ENTER again to turn the valve output off.

Adjust Setting of Minimum Load Ball Valve — The minimum load ball valve must be adjusted to suit the application. Calibrate one circuit at a time as follows:

1. Adjust the ball valve so that it is approximately half open.
2. Operate the chiller in Manual Control mode, with one circuit operating, and all compressor loaders deenergized.
3. Record the cooler ΔT (the difference between cooler entering fluid temperature and cooler leaving fluid temperature) at this fully unloaded condition.
4. Use the Manual Control feature to enable the minimum load valve for the circuit that is operating.
5. Observe and record the cooler ΔT with the minimum load valve energized.
6. Adjust the minimum load ball valve until the cooler temperature difference reading from Step 5 is equal to half of the temperature difference reading from Step 3.
7. Open the ball valve to decrease the temperature difference or close the ball valve to increase the temperature difference (ΔT). When the valve is adjusted correctly, the difference between cooler entering and leaving fluid temperatures when the minimum load control is energized must be at least half of the temperature difference when the minimum load control is deenergized. For example, if the difference between the cooler entering and leaving water temperature is 3° F with the valve deenergized, then the difference between cooler entering and leaving water temperature must be at least 1.5° F with the valve energized.

Once the outputs have been tested and the ball valve adjusted, the installation is complete. Disable manual control and return chiller to desired operational status.

CAPACITY CONTROL OVERRIDES — The following overrides will modify the normal operation of the routine.

Deadband Multiplier — The user configurable Deadband Multiplier (Z.GN, Configuration mode under sub-mode SLCT) has a default value of 2.0. The range is from 1.0 to 4.0. When set to other than 1.0, this factor is applied to the capacity Load/Unload Factor. The larger this value is set, the longer the control will delay between adding or removing stages of capacity. Figure 4 shows how compressor starts can be reduced over time if the leaving water temperature is allowed to drift a larger amount above and below the set point. This value should be set in the range of 3.0 to 4.0 for systems with small loop volumes. The Main Base Board (MBB) closely follows the rate of compressor cycling for each circuit.

First Stage Override — If the current capacity stage is zero, the control will modify the routine with a 1.2 factor on adding the first stage to reduce cycling. This factor is also applied when the control is attempting to remove the last stage of capacity.

Slow Change Override — The control prevents the capacity stages from being changed when the leaving fluid temperature is close to the set point (within an adjustable deadband) and moving towards the set point.

Ramp Loading — (RL.S, Configuration mode under sub-mode SLCT) — Limits the rate of change of leaving fluid temperature. If the unit is in a Cooling mode and configured for Ramp Loading, the control makes 2 comparisons before deciding to change stages of capacity. The control calculates a temperature difference between the control point and leaving fluid temperature. If the difference is greater than 4° F (2.2° C) and the rate of change (°F or °C per minute) is more than the configured Cooling Ramp Loading value (CRMP, Configuration mode under sub-mode SLCT), the control does not allow any changes to the current stage of capacity.

Low Entering Fluid Temperature Unloading — When the entering fluid temperature is below the control point, the control will attempt to remove 25% of the current stages being used. If exactly 25% cannot be removed, the control removes an amount greater than 25%, but no more than necessary. The lowest stage will not be removed.

Low Discharge Superheat — If a circuit's discharge superheat is less than 15° F (8.3° C), the control does not increase the current capacity stage. If the discharge superheat is less than 5° F (2.8° C) and decreasing, the circuit is unloaded every 30 seconds until the superheat is greater than 5° F (2.8° C). The final capacity stage is not unloaded unless an alarm condition exists. This override is ignored for the first 3 minutes after a compressor is started.

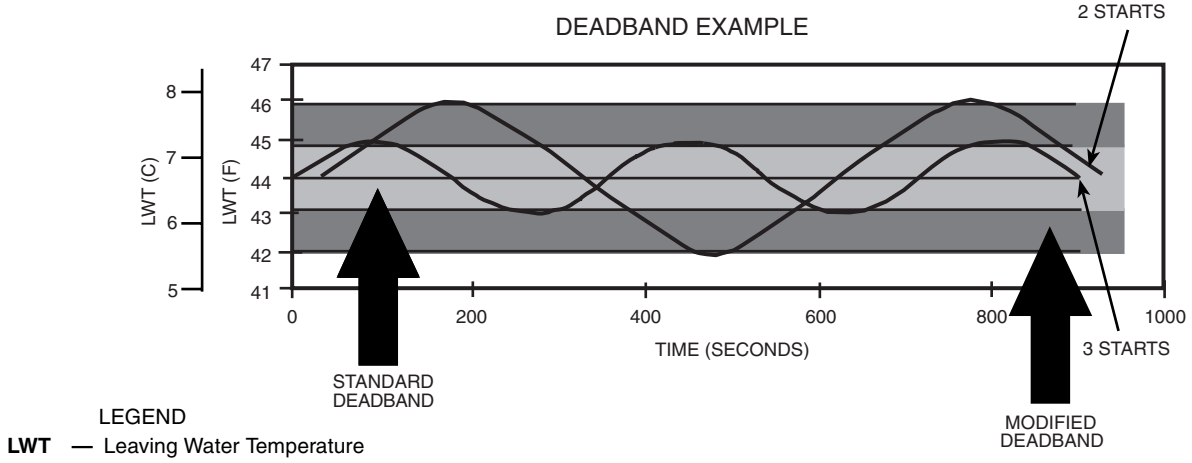

Fig. 4 — Deadband Multiplier

Low Saturated Suction Temperature — To avoid freezing the cooler, the control will compare the circuit Saturated Suction temperature with a predetermined freeze point.

For water [brine] circuits, if the Saturated Suction temperature falls below 34 F (1.1 C) [the Brine Freeze Point], the unit capacity will not increase. If the Saturated Suction temperature falls below 28 F (–2.2 C), [the Brine Freeze Point minus 6° F (3.3° C)], for 90 seconds, all loaders in the circuit are turned off. If this condition continues for a total of 3 minutes, the circuit will alarm and shut down.

For brine applications, the freeze point (Brine Freeze Point) can be entered by pressing ENTER (BR.FZ, Configuration mode under sub-mode SERV) and scrolling 12 items down. The control will use the Brine Freeze Point value less 6° F (3.3° C) as the freeze point to compare with the Saturated Suction temperature. The default for the Brine Freeze Point is 34 F (1.1 C) which means the control will use 28 F (–2.2 C) as the freeze point. The brine freeze point is adjustable from –15 F to 34 F (–26.1 to 1.1 C).

High Condensing Temperature Unloading — Every 10 seconds the control checks for the conditions below. Loaders will be cycled as needed to control the saturated condensing temperature below the configured maximum condensing temperature. Configured maximums are 154 F (67.8 C) for 30GXN,R, 152 F (66.7 C) for 30HXA, and 122 F (50 C) for 30HXC units. If a circuit's saturated condensing temperature is more than 12° F (6.7° C) below the maximum condensing temperature, the circuit capacity is not allowed to increase. If the saturated condensing temperature is more than 2° F (1.1° C) above the maximum condensing temperature for 60 seconds, a loader is turned off. If the saturated condensing temperature rises to more than 5° F (2.8° C) above the maximum condensing temperature during the 60 seconds, a loader is turned off immediately. If all the loaders were already off, the compressor is shut down and an alarm is generated.

MOP (Maximum Operating Pressure) Override — The control monitors saturated condensing and suction temperature for each circuit as well as differential oil pressure. Based on a configurable maximum operating set point (saturated suction temperature), set maximum condensing temperature, and minimum differential oil pressure, the control may reduce the number of capacity stages being used and/or may lower the EXD position when system pressures approach the set parameters.

Head Pressure Control

GENERAL — The microprocessor controls the condenser fans (30GXN,R) to maintain the saturated condensing temperature to a configurable set point. The 30HXA condenserless units with a 09DK condenser use a combination of factory-supplied fan cycling pressure switches (shipped in the 30HXA control box), temperature switches, and an accessory Motormaster® control to maintain head pressure independent of 30HXA unit control. The fans are staged or speed varied (30GXN,R) or water valve controlled (30HXC) based on each circuit's saturated condensing temperature and compressor status. Water cooled units (30HXC) operating at less than 70 F (21.1 C) for entering condenser water require the use of head pressure control.

The chiller must be field configured for the options shown in Table 5. Fan stage settings are shown in Table 6.

AIR-COOLED UNITS (30GXN,R) — See Fig. 5 for condenser fan locations.

Without Motormaster Control — The first stage of fans are turned on based on compressor status or a Head Pressure Set Point based on Saturated Condensing Temperature (SCT). Additional fan stages are added when the SCT exceeds the Head Pressure Set Point. The Head Pressure Set Point is configurable in the Set Point sub-mode. The default is 113 F (45 C). Once a fan stage has been added, the software temporarily modifies the head pressure set point by adding 15° F (8.3° C) for 35 seconds. A fan stage will be removed when the Saturated Condensing Temperature has been less than the Head Pressure Set Point minus 35° F (19.4° C) for 2 minutes. The control uses the higher of the 2 Saturated Condensing Temperature values for 30GXN,R080-160 units. For the 30GXN,R153, 163-350 units, each circuit's fan stages are independently controlled based on the circuit Saturated Condensing Temperature. Refer to Table 7 for condenser fan control information. See Fig. 6A.

With Motormaster Control — For low-ambient operation, the lead fan in each circuit can be equipped with the optional or accessory Motormaster head pressure controller. If factory installed, the controller will be configured for 4 to 20 mA control. With the Variable Head Pressure Select option set to 1 (4 to 20 mA), the MBB module calculates the required output based on Saturated Condensing temperature, Head Pressure set point, and a PID (proportional integral derivative) loop calculation. This 4 to 20 mA output is driven through the SCB. Proportional, Integral, and Derivative gain parameters for air cooled controls are adjustable and can be found in the Service subfunction. Only certified Carrier Comfort Network technicians should perform checkout and adjustment of the PID loop. To obtain this accessory for field installation, order by part number 30GX-900---059, 061, 062 for a single controller package (30GXN,R080-160). Order part number 30GX-900---062, 063, 065 for a dual controller package

(30GXN,R153, 163-350). These packages contain all the hardware required to install this accessory. See Fig. 6B.

The control will use the higher of the 2 Saturated Condensing Temperature values for 30GXN,R080-160 units. For the 30GXN,R153, 163-350 units, each circuit's fan stages are independently controlled based on the circuit's Saturated Condensing Temperature. Refer to Table 8 for condenser fan staging information.

WATER-COOLED UNITS (30HXC) — The 30HXC chiller can be configured to control direct acting water valves that are controlled by a 4 to 20 mA (2 to 10 vdc) signal. A 0 to 20 mA (0 to 10 vdc) or 20 to 0 mA (10 to 0 vdc) can also be configured. Installing a 500-ohm $^1/_2$ watt resistor across the 2 output terminals of the mA signal enables the use of the vdc signal. Set this configuration (VHPT, configuration mode under sub-mode OPT1) to 1 (4 to 20 mA or 2 to 10 vdc), 2 (0 to 20 mA or 0 to 10 vdc), or 3 (20 to 0 mA or 10 to 0 vdc) as desired depending on valve type. Signal connections are made at terminal block TB2, terminals 14 and 15. The control scheme reads the saturated condensing temperature and uses a PID (proportional integral derivative) loop to control the head pressure. Proportional, Integral and Derivative gain parameters for the water-cooled controls are adjustable and can be found in the SERV sub-mode under the Configuration mode. Only certified Carrier Comfort Network technicians should perform checkout and adjustment of the PID loop.

CONDENSERLESS UNITS (30HXA) — The 30HXA unit is often applied with an 09DK air-cooled condenser. The remote condenser fans are controlled by 2 relay outputs. These connections are in the 30HXA control box. See Field Wiring section on page 65 for wiring details. The 30HXA control must be configured to turn the 09DK fans on and/or off. To set the 30HXA control for this configuration, Unit Type (TYPE, Configuration mode under sub-mode UNIT) must be changed to 3 (Split System). The Head Pressure Control Type (HPCT under sub-mode OPT1) must be changed to 1 (air-cooled), and Condenser Pump control must be set to 0 (CNPC must be set to No control, Configuration mode under sub-mode OPT1).

Low ambient head pressure control can be accomplished with fan cycling pressure switches (09DK054-094), temperature switches (09DK044, 074-094), and Motormaster® control. The Motormaster control requires a temperature sensor input to control condenser fan cycling. The Motormaster V control also requires a temperature sensor input or the 4 to 20 mA output signal from the *Comfort*link™ control system. See accessory installation instructions for further information.

The Head Pressure Control Type (HPCT under sub-mode OPT1) may be set to control various types of head pressure control devices. HPCT may be set to 0 (No Control), 1 (Air Cooled), 3 (Common Evaporative Tower), or 4 (Independent Evaporative Tower).

The 30HXA chillers also support the use of a 4 to 20 mA (2 to 10 vdc), 0 to 20 mA (0 to 10 vdc), or 20 to 0 mA (10 to 0 vdc) for fan speed control. Installing a 500-ohm $^1/_2$ watt resistor across the 2 output terminals of the mA signal enables the use of the vdc signal. Set this configuration (VHPT, configuration mode under sub-mode OPT1) to 1 (4 to 20 mA or 2 to 10 vdc), 2 (0 to 20 mA or 0 to 10 vdc), or 3 (20 to 0 mA or 10 to 0 vdc) as desired depending on control type. For common output applications (single output for both circuits), the signal connections are made at terminal block TB2, terminals 14 and 15. For independent (one output for each circuit) applications, the signal connections are made at terminal block TB2, terminals 14 and 15 for circuit A, and terminals 12 and 13 for circuit B.

Table 5 — Field Configured Chiller Options

UNIT	CONFIGURATION OPTION	DESCRIPTION	POINT NAME	FACTORY CONFIGURATION
30GX	Head Pressure Control Type	Method of controlling head pressure	HPCT	Air Cooled (30GX Default, Do not modify)
	Fan Staging Select	Method of controlling fan staging	FAN.S	See Table 7
	Variable Head Pressure Select	Method of controlling variable head pressure	VHPT	0 = None 1 = Motormaster FIOP is installed. Set to 1 if Motormaster accessory is installed.
30HXC	Head Pressure Control Type	Method of controlling head pressure	HPCT	Water Cooled (30HXC Default, Do not modify)
	Variable Head Pressure Select	Method of controlling variable head pressure	VHPT	0=None 1 = 4 to 20 mA (*2 to 10 vdc) 2 = 0 to 20 mA (*0 to 10 vdc) 3 = 20 to 0 mA (*10 to 0 vdc)
30HXA	Head Pressure Control Type	Method of controlling head pressure	HPCT	No Control (30HXA Default) Air Cooled Common Evaporative Tower Independent Evaporative Tower
	Variable Head Pressure Select	Method of controlling variable head pressure	VHPT	0=None 1 = 4 to 20 mA (*2 to 10 vdc) 2 = 0 to 20 mA (*0 to 10 vdc) 3 = 20 to 0 mA (*10 to 0 vdc)

*A vdc signal can be generated by installing a 500-ohm $^1/_2$-watt resistor across the 2 output terminals of the mA signal.

Table 6 — Fan Staging Select Settings for Air Cooled (30GXN,R) Units

UNIT 30GXN,R	OPTION NUMBER	NAVIGATOR DISPLAY	DESCRIPTION
080-090*	6	(1 Stage Com)	1st stage compressor status and SCT set point 2nd stage common control based on highest SCT
083,093,106,108, 114,115,125,135*	7	(2 Stage Com)	1st stage compressor status and SCT set point 2nd and 3rd stage common control based on highest SCT
118,128,138, 150,160*	8	(3 Stage Com)	1st stage compressor status and SCT set point 2nd through 4th stage common control based on highest SCT
153,174,175, 204,205,225*	4	(2 Stage A/1 Stage B)	1st stage each circuit, compressor status 2nd stage Circuit B independent 2nd and 3rd stage Circuit A independent
163,178*	2	(2 Stage Indp)	1st stage each circuit, compressor status 2nd and 3rd stage each circuit independent
249,250,264*	5	(3 Stage A/2 Stage B)	1st stage each circuit, compressor status 2nd stage Circuit B independent 2nd, 3rd and 4th stage Circuit A independent
208,228 253,268,281-350*	3	(3 Stage Indp)	1st stage each circuit, compressor status 2nd, 3rd and 4th stage each circuit independent

LEGEND

SCT — Saturated Condensing Temperature

*And associated modular sizes.

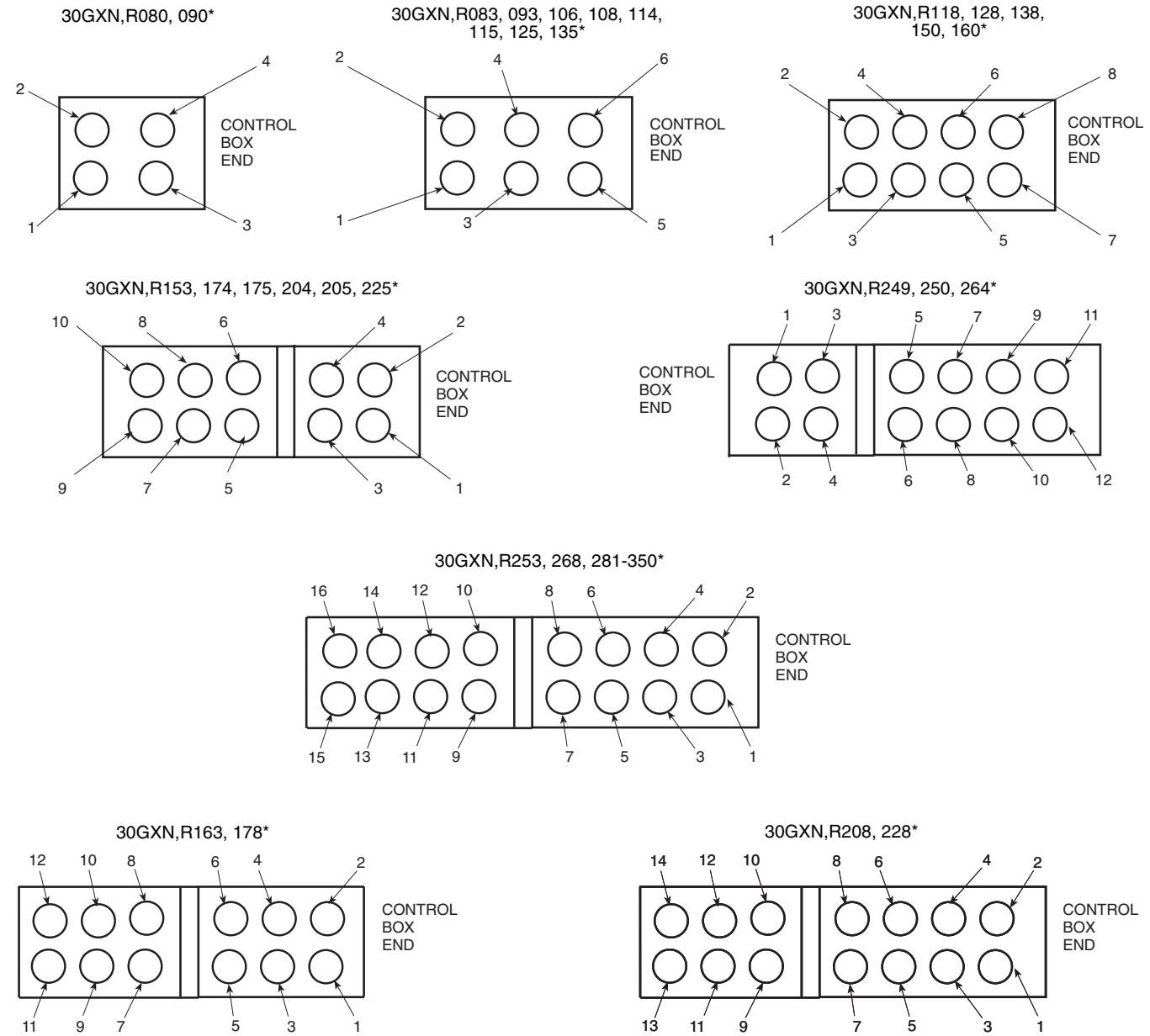

*And associated modular sizes.

Fig. 5 — 30GX Condenser Fan Locations

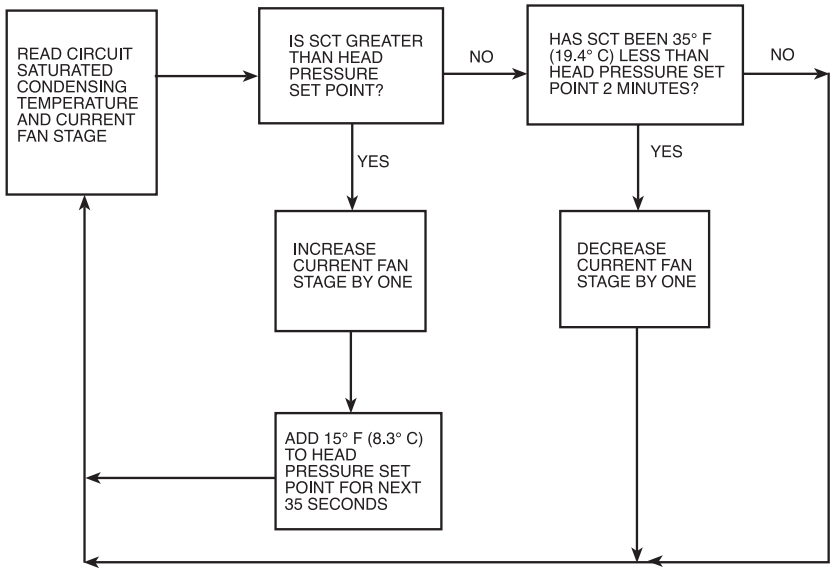

LEGEND

SCT — Saturated Condensing Temperature

Fig. 6A — 30GXN,R Units Head Pressure Control Without Motormaster® V Control

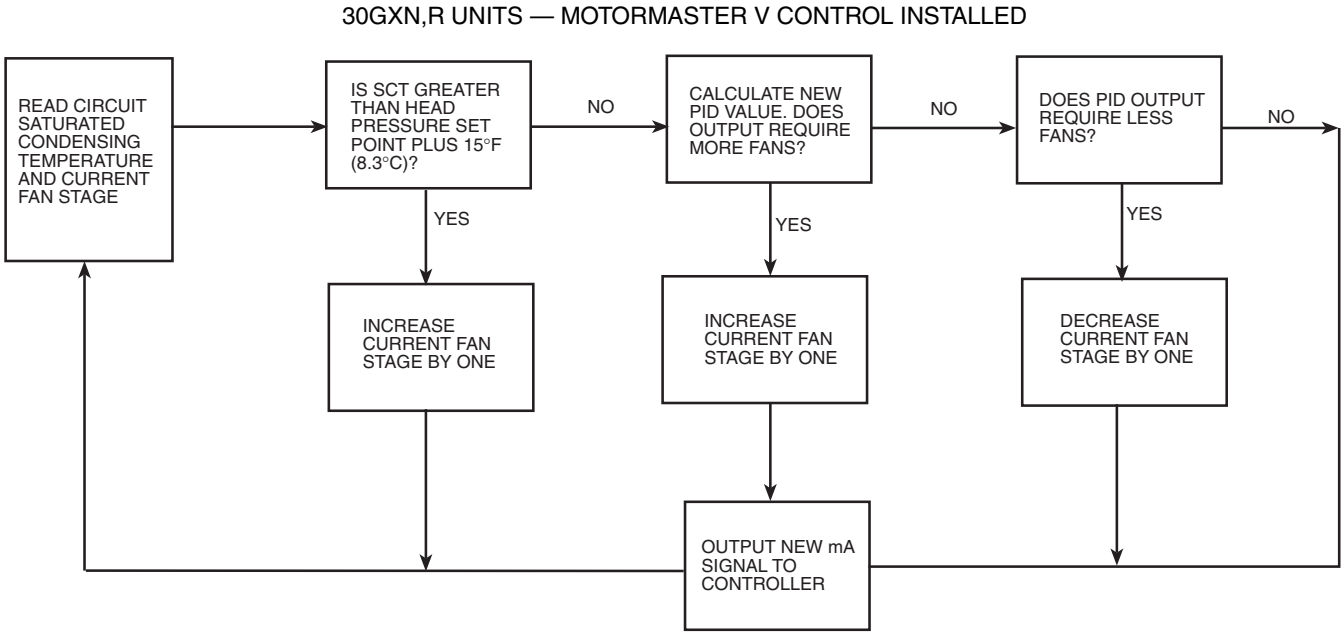

Fig. 6B — 30GXN,R Units Head Pressure Control With Motormaster V Control

Table 7 — Control Methods and Cooling Set Points

CONTROL TYPE (CTRL)	OCCUPANCY STATE	COOLING SET POINT SELECT (CLSP)				
		Single	Dual, Switch	Dual, 7 day	Dual, CCN Occ	4 to 20 mA†
Switch	Occupied	ON,CSP1	ON*	ON,CSP1	ON,CSP1	ON
	Unoccupied	ON,CSP1	ON*	ON,CSP2	ON,CSP2	ON
7 Day Occ	Occupied	ON,CSP1	ON*	Illegal	Illegal	ON
	Unoccupied	OFF	OFF	Illegal	Illegal	OFF
Occupancy	Occupied	ON,CSP1	ON*	Illegal	Illegal	ON
	Unoccupied	OFF	OFF	Illegal	Illegal	OFF
CCN	Occupied	ON,CSP1	ON*	ON,CSP1	ON,CSP1	ON
	Unoccupied	ON,CSP1	ON*	ON,CSP2	ON,CSP2	ON

*Dual set point switch input used. CSP1 used when switch input is open. CSP2 used when switch input is closed.
†Cooling set point determined from 4 to 20 mA input to Energy Management Module (EMM) to terminals TB6-3,5.

Table 8 — 30GXN,R080-350 Condenser Fan Staging (Main Base Board Controlled)

30GXN,R UNIT SIZE	FAN TYPE	NAVIGATOR OUTPUT POINT NAME	FAN CONTACTOR	FANS CONTROLLED
080, 090	Standard	Fan 1	FC-1	1, 2
		Fan 2	FC-2	3, 4
	High Static	Fan 1	FC-1, 1A	1, 2
		Fan 2	FC-2, 2A	3, 4
083, 093, 106-115, 125, 135	Standard	Fan 1	FC-1	1, 2
		Fan 2	FC-2	3, 4
		Fan 3	FC-3	5, 6
	High Static	Fan 1	FC-1, 1A	1, 2
		Fan 2	FC-2, 2A	3, 4
		Fan 3	FC-3, 3A	5, 6
118, 128, 138, 150, 160	Standard	Fan 1	FC-1	1, 2
		Fan 2	FC-2	3, 4
		Fan 3	FC-3	5, 6
		Fan 3	FC-4	7, 8
	High Static	Fan 1	FC-1, 1A	1, 2
		Fan 2	FC-2, 2A	3, 4
		Fan 3	FC-3, 3A	5, 6
		Fan 3	FC-4, 4A	7, 8
153, 174, 175, 204, 205, 225	Standard	Comp. B1 contactor*	FC-1	1, 2
		Fan 2	FC-2	3, 4
		Fan 3	FC-3	5, 6
		Comp. A1/A2 contactor*	FC-4	7, 8
		Fan 1	FC-5	9, 10
	High Static	Comp. B1 contactor*	FC-1, 1A	1, 2
		Fan 2	FC-2, 2A	3, 4
		Fan 3	FC-3, 3A	5, 6
		Comp. A1/A2 contactor*	FC-4, 4A	7, 8
		Fan 1	FC-5, 5A	9, 10
163, 178	Standard	Comp. B1 contactor*	FC-1	1, 2
		Fan 2	FC-2	3, 4
		Fan 4	FC-3	5, 6
		Comp. A1 contactor*	FC-4	7, 8
		Fan 1	FC-5	9, 10
		Fan 3	FC-6	11, 12
	High Static	Comp. B1 contactor*	FC-1, 1A	1, 2
		Fan 2	FC-2, 2A	3, 4
		Fan 4	FC-3, 3A	5, 6
		Comp. A1 contactor*	FC-4, 4A	7, 8
		Fan 1	FC-5, 5A	9, 10
		Fan 3	FC-6, 6A	11, 12
249, 250, 264	Standard	Comp. B1 contactor*	FC-1	1, 2
		Fan 2	FC-2	3, 4
		Fan 1	FC-3	5, 6
		Comp. A1/A2 contactor*	FC-4	7, 8
		Fan 3	FC-5	9, 10
		Fan 3	FC-6	11, 12
	High Static	Comp. B1 contactor*	FC-1, 1A	1, 2
		Fan 2	FC-2, 2A	3, 4
		Fan 1	FC-3, 3A	5, 6
		Comp. A1/A2 contactor*	FC-4, 4A	7, 8
		Fan 3	FC-5, 5A	9, 10
		Fan 3	FC-6, 6A	11, 12
208, 228	Standard	Comp. B1 contactor*	FC-1	1
		Fan 1	FC-2	2, 4
		Fan 2	FC-3	3
		Fan 4	FC-4	5, 7
		Fan 3	FC-5	6, 8
		Comp. A1/A2 contactor*	FC-6	9, 10
		Fan 3	FC-7	11, 12
		Fan 3	FC-8	13, 14
	High Static	Comp. B1 contactor*	FC-1	1
		Fan 1	FC-2, 2A	2, 4
		Fan 2	FC-3	3
		Fan 4	FC-4, 4A	5, 7
		Fan 3	FC-5, 5A	6, 8
		Comp. A1/A2 contactor*	FC-6, 6A	9, 10
		Fan 3	FC-7, 7A	11, 12
		Fan 3	FC-8, 8A	13, 14

LEGEND

Comp. — Compressor
FC — Fan Contactor

*Proper rotation of these fans to be checked when compressor(s) is running. See Fig. 5 for condenser fan locations when viewing from the control box end.

NOTE: For 30GX153, 163-350 units, fan relays Fan 1 and Fan 3 energize Circuit A fans. Fan relays Fan 2 and Fan 4 energize Circuit B fans.

Table 8 — 30GXN,R080-350 Condenser Fan Staging (Main Base Board Controlled) (cont)

30GXN,R UNIT SIZE	FAN TYPE	NAVIGATOR OUTPUT POINT NAME	FAN CONTACTOR	FANS CONTROLLED
253, 268	Standard	Comp. B1 contactor*	FC-1	1
		Fan 1	FC-2	2,4
		Fan 2	FC-3	3
		Fan 4	FC-4	5,7
		Fan 3	FC-5	6,8
		Comp. A1/A2 contactor*	FC-6	9,10
		Fan 3	FC-7	11,12
		Fan 3	FC-8	13,14
		Fan 1	FC-9	15,16
	High Static	Comp. B1 contactor*	FC-1	1
		Fan 1	FC-2, 2A	2,4
		Fan 2	FC-3	3
		Fan 4	FC-4, 4A	5,7
		Fan 3	FC-5, 5A	6,8
		Comp. A1/A2 contactor*	FC-6, 6A	9,10
		Fan 3	FC-7, 7A	11,12
		Fan 3	FC-8, 8A	13,14
		Fan 1	FC-9, 9A	15,16
281-350	Standard	Comp. B1/B2 contactor*	FC-1	1,2
		Fan 2	FC-2	3,4
		Fan 4	FC-3	5,6
		Fan 4	FC-4	7,8
		Fan 1	FC-5	9,10
		Comp. A1/A2 contactor*	FC-6	11,12
		Fan 3	FC-7	13,14
		Fan 3	FC-8	15,16
	High Static	Comp. B1/B2 contactor*	FC-1, 1A	1,2
		Fan 2	FC-2, 2A	3,4
		Fan 4	FC-3, 3A	5,6
		Fan 4	FC-4, 4A	7,8
		Fan 1	FC-5, 5A	9,10
		Comp. A1/A2 contactor*	FC-6, 6A	11,12
		Fan 3	FC-7, 7A	13,14
		Fan 3	FC-8, 8A	15,16

LEGEND
Comp. — Compressor
FC — Fan Contactor

*Proper rotation of these fans to be checked when compressor(s) is running. See Fig. 5 for condenser fan locations when viewing from the control box end.

NOTE: For 30GX153, 163-350 units, fan relays Fan 1 and Fan 3 energize Circuit A fans. Fan relays Fan 2 and Fan 4 energize Circuit B fans.

09DK CONDENSING UNITS

09DK044 Units — The 09DK044 units have accessory provision for fully automatic intermediate-season head pressure control through condenser fan cycling. Fan number 2 and 3 cycling is controlled by outdoor-air temperature through air temperature switches (ATS) 1 and 2.

The air temperature switches are located in the lower divider panel underneath the coil header. The sensing element is exposed to air entering the no. 1 fan compartment through a hole in the panel. Fan no. 1 is non-cycling.

The air temperature switch controls the fans as shown in Table 9.

Table 9 — Air Temperature Switch Control (09DK044 Units)

FAN	FAN SWITCH	TEMPERATURE
FAN 2	ON	Above 65 ± 3 F (18.3 ± 1.7 C)
		Between 55 and 65 F (12.8 and 18.3 C) and temperature falling
	OFF	Below 55 ± 3 F (12.8 ± 1.7 C)
		Between 55 and 65 F (12.8 and 18.3 C) and temperature rising
FAN 3	ON	Above 80 ± 3 F (26.7 ± 1.7 C)
		Between 70 and 80 F (21.1 and 26.7 C) and temperature falling
	OFF	Below 70 ± 3 F (21.1 ± 1.7 C)
		Between 70 and 80 F (21.1 and 26.7 C) and temperature rising

09DK054-094 — The capacity of an air-cooled condenser increases with increased temperature difference (defined as saturated condensing temperature minus entering outdoor-air temperature) and decreases with decreased temperature difference. A drop in entering outdoor-air temperature results in a lower saturated condensing temperature. When outdoor-air temperature drops below the minimum temperature for standard units, additional head pressure control is required.

Model 09DK units have fully automatic intermediate-season head pressure control through condenser fan cycling using electromechanical fan cycling controls. Standard head pressure controls regulate the 100 and 50/50% condenser capacity applications. Head pressure can also be controlled by fan cycling controls supplemented by the accessory Motormaster® V solid-state head pressure control. See Motormaster V installation instructions for more information.

In the standard control scheme, fans 1 and 2 are on when there is a call for cooling from the respective coil circuits. Fans 1 and 2 are non-cycling. On 054 and 064 units, fans 3 and 4 are controlled by using a fan cycling pressure switch on each of the primary coil circuits in response to condensing pressure. Fan cycling switches must be replaced with the switches supplied in the control box of the 30HXA chiller.

The fan cycling pressure switch controls the fans as follows: Fans 3 and 4 are on above 185 ± 10 psig (1276 ± 69 kPa) and off below 97 ± 10 psig (669 ± 69 kPa). If pressure is rising between 97 psig (669 kPa) and 185 psig (1276 kPa), fans 3 and 4 are off. If pressure is falling from 185 psig (1276 kPa) to 97 psig (669 kPa) fans 3 and 4 are on.

The 09DK054-094 condensers are supplied with fan cycling pressure switches suitable for use with R-22 refrigerant. Fan cycling pressure switches that are compatible with R-134a refrigerant pressures are shipped with the 30HXA chillers. These fan cycling pressure switches must be installed in place of the 09DK factory-installed switches before charging to ensure proper head pressure control.

The air temperature switch controls the fans as follows: On the 074-094 condensers, below 70 ± 3 F (21.1 ± 1.7 C) outdoor ambient, fans 5 and 6 are off; above 80 ± 3 F (26.7 ± 1.7 C) fans 5 and 6 are on. Between 70 F (21.1 C) and 80 F (26.7 C), whether fans 5 and 6 are on or off depends on whether temperature is rising or falling. If the temperature is rising from 70 F (21.1 C) to 80 F (26.7 C), fans 5 and 6 are off. If the temperature is falling from 80 F (26.7 C) to 70 F (21.1 C), fans 5 and 6 are on.

ADJUSTING PID ROUTINES — The 30GXN,R, 30HXA and 30HXC head pressure control routines use PID (proportional integral derivative) loops to maintain a user-configurable head pressure set point. Gain defaults values are located in the SERV sub-mode under the Configuration mode (items H.PGN, H.IGN and H.DGN). The control calculates a new fan speed (30GXN,R) or water valve position (30HXC) every 5 seconds based on these gain values and an error term equal to saturated condensing temperature minus head pressure set point. If the control routine is not responding fast enough to large changes (circuit starting, for example), increase the proportional term.

When the routine is making too great a change to valve position or fan speed, decrease the proportional term. To minimize hunting, keep the integral term positive and as low as possible. This value is used to control "droop," which is common in master/submaster control schemes. The default for the derivative term is zero. The value should not need to be changed.

For more information on tuning PID loops, consult the Comfort Controller Installation manual, catalog number 808-890. Follow the instructions under Tuning Control loops.

Control Methods

SWITCH — Unit is started and stopped manually by switching the ENABLE/OFF/REMOTE CONTACT switch from OFF to ENABLE or by external contacts with the switch in the REMOTE position. The unit can be enabled and disabled by this action or all control methods.

7-DAY SCHEDULE — Unit is started and stopped in accordance with the schedule configured under Time Clock mode. This schedule can be configured from the Navigator or from CCN.

OCCUPANCY — Unit is started and stopped in accordance with the local occupancy schedule accessible only from CCN. Schedule Number in Table SCHEDOVR must be configured to 1. If the Schedule Number is set to 0 the unit will operate in a continuous 24-hr Occupied mode.

CCN — Unit is started and stopped by communication over the CCN bus. The CHIL_S_S point in the A_UNIT table is provided for this purpose.

Table 7 illustrates how the control method and cooling setpoint select variables direct the operation of the chiller and the set point to which it controls. The illustration also shows the ON/OFF state of the machine for the given combinations.

Cooling Setpoint Select

SINGLE — Unit operation is based on Cooling Setpoint 1 (CSP1).

DUAL SWITCH — Unit operation is based on Cooling Setpoint 1 (CSP1) when the Dual Setpoint switch contacts are open and Cooling Setpoint 2 (CSP2) when they are closed.

DUAL 7 DAY — Unit operation is based on Cooling Setpoint 1 (CSP1) during the occupied mode and Cool Setpoint 2 (CSP2) during the unoccupied mode as configured under Time Clock mode. Control method must be configured for Switch.

DUAL CCN OCCUPIED — Unit operation is based on Cooling Setpoint 1 (CSP1) during the Occupied mode and Cooling Setpoint 2 (CSP2) during the Unoccupied mode as configured under the local occupancy schedule accessible only from CCN. Schedule Number in Table SCHEDOVR must be configured to 1. If the Schedule Number is set to 0 the unit will operate in a continuous 24-hr Occupied mode. Control method must be configured for Switch.

4 TO 20 mA INPUT — Unit operation is based on an external 4 to 20 mA signal input to the Energy Management Module (EMM).

Ice Mode — When Ice Mode is enabled Cooling Setpoint Select must be set to Dual Switch, Dual 7 day or Dual CCN Occupied and the Energy Management Module (EMM) must be installed. Unit operation is based on Cooling Setpoint 1 (CSP1) during the Occupied mode, Ice Setpoint (CSP3) during the Unoccupied mode with the Ice Done contacts open and Cooling Setpoint 2 (CSP2) during the Unoccupied mode with the Ice Done contacts closed. These 3 setpoints can be utilized to develop your specific control strategy.

Cooler and Condenser (30HXC) Pump Control — The 30GXN,R and 30HX chillers can be configured for cooler and condenser (30HXC) pump control. Inputs for a cooler pump interlock and condenser flow switch or interlock are provided.

COOLER PUMP CONTROL (CPC, Configuration Mode/sub-mode OPT1) — Proper configuration of the cooler pump control is required to prevent possible cooler freeze-up. A cooler flow switch is factory installed to prevent operation without flow through the cooler. It is also recommended that the chiller be interlocked with the chiller water pump starter to provide additional protection. See page 67 of the Field Wiring section for proper connection of the cooler pump interlock.

The factory default setting for cooler pump control is "OFF." It is recommended for all chillers that the cooler pump control be utilized unless the chilled water pump runs continuously or the chilled water system contains a suitable antifreeze solution. When the cooler pump control is "ON," the cooler pump relay will be energized when the chiller enters an "ON" mode (i.e., ON LOCAL, ON TIME, ON CCN). The cooler pump relay will remain energized for 30 seconds after all compressors stop. In the event a freeze protection alarm is generated, the cooler pump relay will be energized whether cooler pump control is configured "ON" or "OFF." The cooler pump relay is also energized anytime a compressor is started as well as when certain alarms are generated. The cooler pump relay should be used as an override to the external pump control if cooler pump control is not utilized.

If the cooler pump control relay output is not wired to control or override the operation of the chilled water pump an OFF DELAY of 10 minutes must be provided after the chiller is disabled to maintain cooler water flow during the pump down period.

30HXC brine applications below 32 F (0° C) leaving brine temperature require cooler pump control. To reduce the possibility of condenser freeze-up the cooler pump must be stopped or isolation valve closed in the event of loss of condenser water flow.

If cooler pump control is turned "OFF" or "ON" and the chilled water flow switch/interlock does not close within 5 minutes after the unit is enabled and in an "ON" mode, alarm A200 will be generated. If cooler pump control is turned "ON" and the chilled water flow switch/interlock is closed when the unit is enabled and enters an "ON" mode alarm A202 will be generated. Alarm A201 will be generated whenever the cooler pump interlock is open for at least 10 seconds during chiller operation.

CONDENSER PUMP CONTROL (CNP.I AND CNPC, Configuration Mode/sub-mode OPT1) — Factory defaults for both condenser pump control and condenser flow switch are set to "NO CONTROL" and "OFF," respectively. The condenser pump can be controlled in one of two ways: In the first method, (CNPC set to "ON WHEN OCCUPIED") the pump can be controlled like the cooler pump. It is turned on whenever the machine is in an "ON" mode and turned off 30 seconds after all compressors stop and the machine is in an "OFF" mode. The second method (CNPC set to "ON WITH COMPRESSORS"), will energize the condenser pump output when the first compressor is started and deenergize the output 30 seconds after the last compressor stops.

When configured for a condenser flow switch/interlock (CNP.I set to "ON"), an alarm A159 is generated if the input does not close within one minute after the machine enters an "ON" mode, or within one minute after the condenser pump relay is energized when configured "ON". Alarm A159 is also generated if the flow switch/interlock opens for more than 10 seconds during chiller operation.

30HXC brine applications below 32 F (0° C) leaving brine temperature require condenser pump control to be configured to "ON WHEN OCCUPIED" and condenser pump interlock to be "ON". A condenser water flow switch must be installed and wired to TB2 terminals 5 & 6. The condenser pump output remains energized for 30 minutes after the Enable/Off/Remote Contact switch is placed in the "OFF" position or the Remote Contacts are opened allowing refrigerant pressure equalization.

Flow Sensor — The factory-installed flow sensor/switch should not require adjustment.

Proper operation of this sensor/switch is necessary to allow the unit to operate and provide running freeze protection for the unit. When power is supplied to the switch, the amber LED in the center of the display will be illuminated.

When there is chilled water flow, but the flow is inadequate to close the switch and allow unit operation, one red LED will illuminate. A red LED can also indicate inoperative pump(s), closed valve, clogged strainer or air in the system.

When the first green LED is illuminated, the switch is closed and the unit will start and run. Various conditions can cause variations in flow and allow the switch to open and cause a "nuisance trip". Greater constant flow will help reduce nuisance tips.

Measure the pressure drop across the cooler and use Appendix E to determine the cooler flow rate then determine if the flow rate is adequate for the application. A green LED does not mean minimum flow requirements have been met.

Cooler Heater Control — Factory-installed cooler heaters can be ordered for the 30GX chillers. If installed and enabled, these heaters are turned on only when the machine is in the off state and the chiller is in a saturated suction temperature freeze condition. The factory-installed option includes the addition of liquid line solenoids and requires the cooler heads to be insulated. DO NOT energize control power with no liquid in the cooler.

Oil Heater Control (30GXN,R Units Only) — Standard feature that controls oil temperature based on the discharge gas temperature (DGT) thermistor located in the oil separator. Heaters turn on when DGT < 105 F (40.6 C) and turn off when DGT > 110 F (43.3 C) and compressors are off.

Navigator Display Module Usage (See Fig. 7 and Tables 10-23.) — The Navigator module provides a mobile user interface to the *Comfort*Link™ control system. The display has up and down arrow keys, an ESCAPE key, and an ENTER key. These keys are used to navigate through the different levels of the display structure. See Table 10. Press the ESCAPE key until 'Select a Menu Item' is displayed to move through the top 11 mode levels indicated by LEDs on the left side of the display.

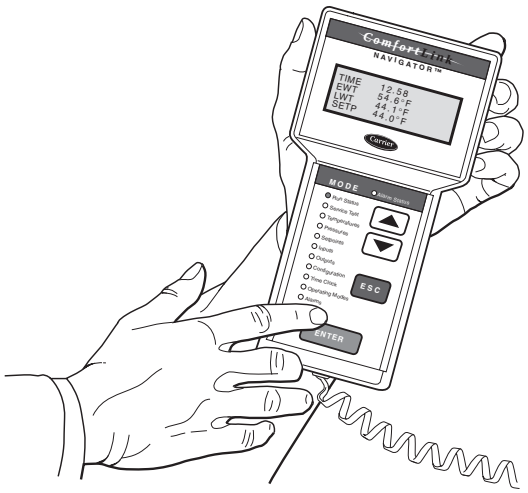

Fig. 7 — Navigator Module

Pressing the ESCAPE and ENTER keys simultaneously will put the Navigator into expanded text mode where full meaning of all sub-modes, items and their values can be displayed. Pressing the ESCAPE and ENTER keys when the display says 'Select a Menu Item' (Mode LED level) will return the Navigator to its default menu of rotating display items (those items in the VIEW sub-mode under the Run Status mode). In addition, the password will be disabled requiring that it be entered again before changes can be made to password protected items.

The Service Test function should be used to verify proper protected items. Press the ESCAPE key to exit out of the expanded text mode.

NOTE: When the LANG variable is changed, all appropriate display expansions will immediately change to the new language. No power-off or control reset is required when reconfiguring languages.

When a specific item is located, the item name appears on the left of the display, the value will appear near the middle of the display and the units (if any) will appear on the far right of the display. Press the ENTER key at a changeable item and the value will begin to flash. Items in the Configuration and Service Test modes are password protected. The words 'Enter Password' will be displayed when required, with the default password also being displayed. Use the ENTER and arrow keys to enter the 4 digits of the password. The default password is 1111. The password can only be changed through CCN devices such as ComfortWORKS®, ComfortView™ and Service Tool. Changing item values or testing outputs is accomplished in the same manner. Locate and display the desired item. Press ENTER so that the item value flashes. Use the arrow keys to change the value or state of a item and press the ENTER key to accept it. Press the ESCAPE key to return to the next higher level of structure. Repeat the process as required for other items. See Tables 11-24 for further details.

Service Test (See Table 12) — *Both main power and control circuit power must be on.* The Service Test function should be used to verify proper operation of the compressors, loaders, pumps, solenoids, fans, heaters, etc. To access the Service Test mode, the Enable/Off/Remote Contact switch

must be in the Off position. Use the display keys to enter the Service Test mode and display 'TEST OFF'. Press the ENTER key and 'Off' will flash (Enter the password if required). Use either arrow key to change the 'Off' to 'On' and press ENTER. Switch the Enable/Off/Remote Contact switch to the Enable position. Use the arrow keys to select either sub-mode OUTS or COMP. Test the expansion valves, oil pumps, fans, cooler heaters, cooler/condenser pump relays, remote alarm relay, head pressure control, and compressor oil and motor cooling solenoids under the OUTS sub-mode. Note that condenser-fan motors are NOT started during VH.PA or VH.PB test on 30GXN,R units with Motormaster® control. Measure 4 to 20 mA dc output using meter in series with violet or pink wire to controller. Refer to the Field Wiring section. These discrete outputs are then turned off if there is no keypad activity for 10 minutes. Test the compressors, loaders, minimum load valves and oil heaters under the COMP sub-mode. Compressor loaders, minimum load valve and oil heaters can be tested with compressors on or off. All compressor outputs can be turned on, but the control will limit the rate by staging one compressor per minute. The relays under the COMP sub-mode will stay on for 10 minutes if there is no keypad activity. Compressors will stay on until they are turned off by the operator. The Service Test mode will remain enabled as long as there is more than one compressor turned on. All safeties are monitored during this test and will turn a compressor, circuit or motor off if necessary. Any other mode or sub-mode can be viewed or changed during the TEST mode. The STAT item (Run Status mode under sub-mode VIEW) will display 'SERVICE TEST' as long as the Service mode is enabled. The TEST sub-mode value must be changed back to OFF before the chiller can be switched to Enable or Remote contact for normal operation.

Configuring and Operating Dual Chiller Control (See Table 23) — The dual chiller routine is available for the control of two units supplying chilled fluid on a common loop. This control is designed for either series or parallel fluid flow (PARA, Configuration mode under sub-mode RSET) arrangements. One chiller must be configured as the master chiller, the other as the slave chiller. For series fluid flow, the master chiller is installed so that it receives entering fluid from the slave chiller and its leaving fluid supplies the load. See Fig. 8. For parallel flow applications, an additional leaving fluid temperature thermistor (Dual Chiller LWT) must be installed as shown in Fig. 9 and connected to the master chiller. Refer to Thermistors section for sensor wiring.

To configure the two chillers for operation, follow the example shown in Table 23. The master chiller will be configured with a slave chiller at address 2. Also in this example, the master chiller will be configured to use Lead/Lag Balance to

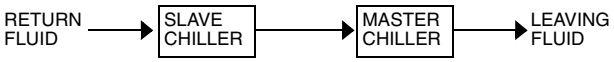

Fig. 8 — Dual Chiller Piping Arrangement

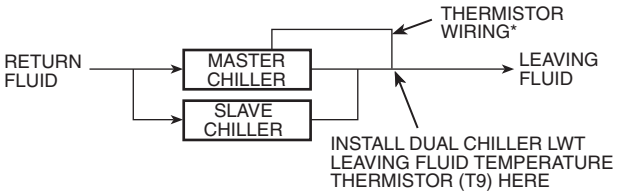

* Depending on piping sizes, use either:
- HH79NZ014 sensor/10HB50106801 well (3-in. sensor/well)
- HH79NZ029 sensor/10HB50106802 well (4-in. sensor/well)

Fig. 9 — Dual Chiller Thermistor Location Parallel Fluid Flow

even out the chiller runtimes weekly. The Lag Start Delay feature will be set to 10 minutes. The chillers will be configured for parallel fluid flow. The master and slave chillers cannot have the same CCN address (CCNA, Configuration mode under OPT2). In addition, the chillers must be connected together on the same CCN bus. Connections can be made to the CCN screw terminals on TB3 in both chillers. The master chiller will determine which chiller will be Lead and which will be Lag. The master chiller controls the slave chiller by forcing the slave chiller ON and OFF, and forcing the control point of the slave chiller. The master chiller will also split demand limiting function appropriately between the two chillers, if demand limiting is enabled.

The master chiller is now configured for dual chiller operation. To configure the slave chiller, only the LLEN, PARA and MSSL variables need to be set. Enable the Lead/Lag chiller variable (LLEN) as shown in Table 23. Similarly, set the Master/Slave Select variable (MSSL) to SLVE. The parallel variable (PARA) must be configured the same as the master chiller. The slave chiller does not use the variables LLBL, LLBD and LLDY.

It is recommended to set the cooling set points to the same setting on both Master and Slave chillers for series flow (Duplex) applications. If outdoor air reset is required the outdoor air thermistor must be connected to the Slave chiller (TB5 term. 7 and 8). Outdoor Air Broadcast (BCST, OAT.B) must be configured "ON". Remote contacts should be connected to both Master and Slave to control unit operation. Optional control inputs and Energy Management Module (EMM) should be connected to the Master chiller.

Table 10 — Navigator Display Menu Structure

RUN STATUS	SERVICE TEST	TEMPERATURES	PRESSURES	SET POINTS	INPUTS	OUTPUTS	CONFIGURATION	TIME CLOCK	OPERATING MODES	ALARMS
Auto Display (VIEW)	Manual Mode On/Off (TEST)	Unit Temperatures (UNIT)	Ckt A Pressures (PRC.A)	Cooling (COOL)	Unit Discrete (GEN.I)	Unit Discrete (GEN.O)	Display (DISP)	Unit Time (TIME)	Modes (MODE)	Current (CRNT)
Machine Hours/Starts (RUN)	Ckt A/B Outputs (OUTS)	Ckt A Temperatures (CIR.A)	Ckt B Pressures (PRC.B)	Heating (HEAT)	Ckt A/B (CRCT)	Ckt A (CIR.A)	Machine (UNIT)	Unit Date (DATE)		Reset Alarms (RCRN)
Compressor Run Hours (HOUR)	Compressor Tests (COMP)	Ckt B Temperatures (CIR.B)		Head Pressure (HEAD)	Unit Analog (4-20)	Ckt B (CIR.B)	Options 1 (OPT1)	Daylight Savings Time (DST)		Alarm History (HIST)
Compressor Starts (STRT)				Liquid Level (LIQ)			Options 2 (OPT2)	Schedule (SCHD)		
Software Version (VERS)							Temperature Reset (RSET)			
							Set Point Select (SLCT)			
							Service Configuration (SERV)			
							Broadcast Configuration (BCST)			

LEGEND

Ckt — Circuit

Table 11 — Configuration Mode and Sub-Mode Directory

SUB-MODE	KEYPAD ENTRY	ITEM	DISPLAY	ITEM EXPANSION	COMMENT
DISP	ENTER	TEST	ON/OFF	TEST DISPLAY LEDs	See Backlight and Contrast adjustment in Tables 20 and 21.
	▼	METR	X	METRIC DISPLAY	Off = English On = Metric
	▼	LANG	X	LANGUAGE SELECTION	Default: English English Espanol Francais Portuguese
	▼	PAS.E	ENBL/DSBL	PASSWORD ENABLE	
	▼	PASS	XXXX	SERVICE PASSWORD	Default: 1111
UNIT	ENTER	TYPE	X	UNIT TYPE	Air Cooled (GXN,R) Water Cooled (HXC) Split (HXA) Heat Machine Heat Reclaim
	▼	TONS	XXX	UNIT SIZE	
	▼	CAP.A	XXX %	CIRCUIT A % CAPACITY	30GXN,R 080, 083, 135, 138 = 54 090, 093, 108, 114, 125, 128, 153 = 59 106, 115 = 63 150 (60 Hz) = 41, (50 Hz) = 45 160 = 45 174, 175, 178, 281-350 = 50 204, 205 = 64 225 = 61 118, 163 = 55 249, 250, 253 = 71 208 = 70 264, 268 = 67 228 = 72 30HXA,C 076, 186 = 50 086, 126 = 54 096, 116, 136, 161 = 59 106, 246 = 63 146 = 55 171 = 45 206 = 57 261 = 65 271 = 67
	▼	CMP.A	X	NUMBER CIRC A COMPRESSOR	HXA,C076-186 = 1 HXA,C206-271 = 2 GXN,R080-175 = 1 GXN,R204-350 = 2
	▼	CMP.B	X	NUMBER CIRC B COMPRESSOR	HXA,C076-271 = 1 GXN,R080-264 = 1 GXN,R281-350 = 2
	▼	DIS.S	XX.X °F	DISCHARGE SUPER SETPOINT	Default: 22° F DISCHARGE SUPERHEAT
		FAN.S	X	FAN STAGING SELECT	None (30HXA, 30HXC) 1 Stage Ind. 2 Stage Ind. (30GXN,R163, 178) 3 Stage Ind. (30GXN,R281-350, 208, 228, 253, 268) 2 Stage A Ind./ 1 Stage B Ind. (30GXN,R174-225) 3 Stage A Ind./ 2 Stage B Ind. (30GXN,R249-264) 1 Stage Common (30GXN,R080, 090) 2 Stage Common (30GXN,R083, 093, 106, 108, 114, 115, 125, 135) 3 Stage Common (30GXN,R118, 128, 138, 150, 160)
	ENTER	CM.A1	XXX AMPS	COMPR. A1 MUST TRIP AMPS	Verify with Appendix A
	ENTER	CM.A2	XXX AMPS	COMPR. A2 MUST TRIP AMPS	Verify with Appendix A
	ENTER	CM.B1	XXX AMPS	COMPR. B1 MUST TRIP AMPS	Verify with Appendix A
	ENTER	CM.B2	XXX AMPS	COMPR. B2 MUST TRIP AMPS	Verify with Appendix A

Table 11 — Configuration Mode and Sub-Mode Directory (cont)

SUB-MODE	KEYPAD ENTRY	ITEM	DISPLAY	ITEM EXPANSION	COMMENT
OPT1	ENTER	FLUD	X	COOLER FLUID	Default: Water Water Medium Temperature Brine Low Temperature Brine (30HX only)
	▼	MLVS	YES/NO	MIN LOAD VALVE SELCT	Minimum Load Valve
	▼	HPCT	X	HEAD PRESS CONTROL TYPE	No Control Air Cooled (30GXN,R, 30HXA default) Water Cooled (30HXC default) Common Tower Enable Independent Tower Enable
	▼	VHPT	X	VAR HEAD PRESSURE SELECT	0 = None (30HX, 30GX No Motormaster) 1 = 4-20 mA (2-10 vdc) 2 = 0-20 mA (0-10 vdc) 3 = 20-0 mA (10-0 vdc)
	▼	PRTS	YES/NO	PRESSURE TRANSDUCERS	Default: Yes
	▼	CPC	ON/OFF	COOLER PUMP CONTROL	Default: Off
	▼	CNP.I	ON/OFF	CONDENSER PUMP INTERLOCK	Default: Off (Does not require condenser pump control)
	▼	CNPC	X	CONDENSER PUMP CONTROL	Default: No Control No Control On when occupied On with compressor(s)
	▼	CWT.S	YES/NO	CONDENSER FLUID SENSORS	Default: No
	▼	LVL.E	YES/NO	LEVEL SENSOR ENABLE	Default: Yes (Liquid level sensor control)
	▼	EMM	YES/NO	EMM MODULE INSTALLED	
OPT2	ENTER	CTRL	X	CONTROL METHOD	Default: Switch Switch = Enable/Off/Remote Contact 7 Day Occ = 7 Day Schedule Occupancy = CCN Occupancy CCN = CCN Control
	▼	CCNA	XXX	CCN ADDRESS	Default: 1 Range: 1 to 239
	▼	CCNB	XXX	CCN BUS NUMBER	Default: 0 Range: 0 to 239
	▼	BAUD	X	CCN BAUD RATE	Default: 9600 2400 4800 9600 19,200 38,400
	▼	LOAD	X	LOADING SEQUENCE SELECT	Default: Equal Equal Staged
	▼	LLCS	X	LEAD/LAG SEQUENCE SELECT	Default: Automatic Automatic Circuit A Leads Circuit B Leads
	▼	CP.SQ	X	COMPRESSOR SEQUENCE	Default: Automatic Automatic Compressor 1 Leads Compressor 2 Leads
	▼	LCWT	XX.X ΔF	HIGH LCW ALERT LIMIT	Default: 60 Range: 2 to 60 F
	▼	DELY	XX	MINUTES OFF TIME	Default: 0 Minutes Range: 0 to 15 Minutes
	▼	CLS.C	ENBL/DSBL	CLOSE CONTROL SELECT	Default: Disable
	▼	ICE.M	ENBL/DSBL	ICE MODE ENABLE	Default: Disable
	▼	C.UNB	XX %	CURRENT UNBALANCE SETPOINT	Default: 10% Range: 10 to 25%
	▼	NO.FL	ENBL/DSBL	ENABLE NO FLOW DETECTION	Default: Enable
	▼	WM.SG	ENBL/DSBL	WINTERIZE ALERT CONFIG	Default: Enable
	▼	ALR.C	X	ALARM RELAY USAGE	Default: Alerts + Alarms Alerts + Alarms Alarms Only Off

Table 11 — Configuration Mode and Sub-Mode Directory (cont)

SUB-MODE	KEYPAD ENTRY	ITEM	DISPLAY	ITEM EXPANSION	COMMENT
RSET	ENTER	CRST	X	COOLING RESET TYPE	Default: No Reset No Reset 4 to 20 mA Input Outdoor Air Temperature Return Fluid Space Temperature
	▼	CRT1	XXX.X °F	NO COOL RESET TEMP	Default: 125 F Range: 0° to 125 F For return fluid reset use cooler ΔT
	▼	CRT2	XXX.X °F	FULL COOL RESET TEMP	Default: 0° F Range: 0° to 125 F For return fluid reset use cooler ΔT
	▼	DGRC	XX.X ΔF	DEGREES COOL RESET	Default: 0° F Range: –30 to 30 F
	▼	HRST	X	HEATING RESET TYPE	Default: No Reset No Reset 4 to 20 mA Input Outdoor Air Temperature Return Fluid Space Temperature
	▼	HRT1	XXX.X °F	NO HEAT RESET TEMP	Default: 0° F Range: 0° to 125 F
	▼	HRT2	XXX.X °F	FULL HEAT RESET TEMP	Default: 125 F Range: 0° to 125 F
	▼	DGRH	XX.X ΔF	DEGREES HEAT RESET	Default: 0° F Range: –30 to 30 F
	▼	DMDC	X	DEMAND LIMIT SELECT	Default: None None Switch 4 to 20 mA Input CCN Loadshed
	▼	DM20	XXX %	DEMAND LIMIT AT 20 ma	Default: 100% Range: 0 to 100%
	▼	SHNM	XXX	LOADSHED GROUP NUMBER	Default: 0 Range: 0 to 99
	▼	SHDL	XXX %	LOADSHED DEMAND DELTA	Default: 0% Range: 0 to 60%
	▼	SHTM	XXX	MAXIMUM LOADSHED TIME	Default: 60 Minutes Range: 0 to 120 Minutes
	▼	DLS1	XXX %	DEMAND LIMIT SWITCH 1	Default: 80% Range: 0 to 100%
	▼	DLS2	XXX %	DEMAND LIMIT SWITCH 2	Default: 50% Range: 0 to 100%
	▼	LLEN	ENBL/DSBL	LEAD/LAG CHILLER ENABLE	Default: Disable
	▼	MSSL	SLVE/MAST	MASTER/SLAVE SELECT	Default: Master
	▼	SLVA	XXX	SLAVE ADDRESS	Default: 0 Range: 0 to 239
	▼	LLBL	X	LEAD/LAG BALANCE SELECT	Default: Master Leads Master Leads Slave Leads Automatic
	▼	LLBD	XXX	LEAD/LAG BALANCE DELTA	Default: 168 hours Range: 40 to 400 hours
	▼	LLDY	XXX	LAG START DELAY	Default: 5 minutes Range: 0 to 30 minutes
	▼	PARA	YES/NO	PARALLEL CONFIGURATION	Default: No (Series Flow)

Table 11 — Configuration Mode and Sub-Mode Directory (cont)

SUB MODE	KEYPAD ENTRY	ITEM	DISPLAY	ITEM EXPANSION	COMMENT
SLCT	ENTER	CLSP	X	COOLING SETPOINT SELECT	Default: Single Single Dual Switch Dual 7 day Dual CCN Occupied 4 to 20 mA Input (requires EMM)
	▼	HTSP	X	HEATING SETPOINT SELECT	Default: Single Single Dual Switch Dual 7 day Dual CCN Occupied 4 to 20 mA Input (requires EMM)
	▼	RL.S	ENBL/DSBL	RAMP LOAD SELECT	Default: Enable
	▼	CRMP	X.X	COOLING RAMP LOADING	Default: 1.0 Range: 0.2 to 2.0
	▼	HRMP	X.X	HEATING RAMP LOADING	Default: 1.0 Range: 0.2 to 2.0
	▼	HCSW	COOL/HEAT	HEAT COOL SELECT	Default: Cool
	▼	Z.GN	X.X	DEADBAND MULTIPLIER	Default: 2.0 Range: 1.0 to 4.0
SERV	ENTER	H.PGN	XX.X	HEAD PRESSURE P GAIN	Default: 1.0 Range: –20 to 20
	▼	H.IGN	XX.X	HEAD PRESSURE I GAIN	Default: 0.1 Range: –20 to 20
	▼	H.DGN	XX.X	HEAD PRESSURE D GAIN	Default: 0.0 Range: –20 to 20
	▼	H.MIN	XXX.X	WATER VALVE MINIMUM POS.	Default: 20% Range: 0 to 100%
	▼	MT.SP	XXX.X °F	MOTOR TEMP SETPOINT	Default: 200 F (170 F for Brine)
	▼	BR.FZ	XXX.X °F	BRINE FREEZE POINT	Default: 34 F Range: –20 to 34 F
	▼	EN.A1	ENBL/DSBL	ENABLE COMPRESSOR A1	Default: Enable (All)
	▼	EN.A2	ENBL/DSBL	ENABLE COMPRESSOR A2	Disable (HX076-186, GXN,R080-175) Enable (HX206-271, GXN,R204-350)
	▼	EN.B1	ENBL/DSBL	ENABLE COMPRESSOR B1	Default: Enable (All)
	▼	EN.B2	ENBL/DSBL	ENABLE COMPRESSOR B2	Disable (HX076-271, GXN,R080-264) Enable (GXN,R281-350)
	▼	W.DNE	YES/NO	WINTERIZATION PERFORMED	
BCST	ENTER	TD.B.C	ON/OFF	CCN TIME/DATE BROADCAST	Default: Off
	▼	OAT.B	ON/OFF	CCN OAT BROADCAST	Default: Off
	▼	GS.BC	ON/OFF	GLOBAL SCHEDULE BROADCAST	Default: Off
	▼	BC.AK	ON/OFF	BROADCAST ACKNOWLEDGER	Default: Off

Table 12 — Service Test Mode and Sub-Mode Directory

SUB-MODE	KEYPAD ENTRY	ITEM	DISPLAY	ITEM EXPANSION	COMMENT
TEST	ENTER		ON/OFF	SERVICE TEST MODE	To Enable Service Test Mode, move Enable/Off/ Remote Contact switch to OFF. Change TEST to ON. Move switch to ENABLE.
OUTS	ENTER	EXV.A	XXX %	EXV % OPEN	
	▼	VH.PA	XXX %	VAR HEAD PRESS %	
	▼	OL.P.A	ON/OFF	OIL PUMP	
	▼	MC.A1	ON/OFF	MOTOR COOLING SOLENOID A1	
	▼	MC.A2	ON/OFF	MOTOR COOLING SOLENOID A2	
	▼	OS.A1	ON/OFF	OIL SOLENOID A1	
	▼	OS.A2	ON/OFF	OIL SOLENOID A2	
	▼	EXV.B	XXX %	EXV % OPEN	
	▼	VH.PB	XXX %	VAR HEAD PRESS %	
	▼	OL.P.B	ON/OFF	OIL PUMP	
	▼	MC.B1	ON/OFF	MOTOR COOLING SOLENOID B1	
	▼	MC.B2	ON/OFF	MOTOR COOLING SOLENOID B2	
	▼	OS.B1	ON/OFF	OIL SOLENOID B1	
	▼	OS.B2	ON/OFF	OIL SOLENOID B2	
	▼	FAN1	ON/OFF	FAN 1 RELAY	Fans 1, 2 (080-160) Fans 5, 6 (249-264) Fans 9, 10 (174-225, 281-350) Remote Condenser Fan Enable (30HXA) Circuit A
	▼	FAN2	ON/OFF	FAN 2 RELAY	Fans 3, 4 (All sizes) Remote Condenser Fan Enable (30HXA) Circuit B
	▼	FAN3	ON/OFF	FAN 3 RELAY	Fans 5, 6 (106-225) Fans 7, 8 (150,160) Fans 9, 10, 11, 12 (249-264) Fans 13, 14, 15, 16 (281-350)
	▼	FAN4	ON/OFF	FAN 4 RELAY	Fans 5, 6, 7, 8 (281-350)
	▼	CLR.P	ON/OFF	COOLER PUMP RELAY	
	▼	CLR.H	ON/OFF	COOLER HEATER	
	▼	CND.P	ON/OFF	CONDENSER PUMP RELAY	
	▼	RMT.A	ON/OFF	REMOTE ALARM RELAY	
COMP	ENTER	CC.A1	ON/OFF	COMPRESSOR A1 RELAY	
	▼	CC.A2	ON/OFF	COMPRESSOR A2 RELAY	
	▼	LD.A1	ON/OFF	LOADER A1 RELAY	
	▼	LD.A2	ON/OFF	LOADER A2 RELAY	
	▼	MLV	ON/OFF	MINIMUM LOAD VALVE	
	▼	OL.H.A	ON/OFF	OIL HEATER	
	▼	CC.B1	ON/OFF	COMPRESSOR B1 RELAY	
	▼	CC.B2	ON/OFF	COMPRESSOR B2 RELAY	
	▼	LD.B1	ON/OFF	LOADER B1 RELAY	
	▼	LD.B2	ON/OFF	LOADER B2 RELAY	
	▼	MLV	ON/OFF	MINIMUM LOAD VALVE	
	▼	OL.H.B	ON/OFF	OIL HEATER	

Table 13 — Temperature Mode and Sub-Mode Directory

SUB-MODE	KEYPAD ENTRY	ITEM	DISPLAY	ITEM EXPANSION	COMMENT
UNIT	ENTER	CEWT	XXX.X °F	COOLER ENTERING FLUID	
	▼	CLWT	XXX.X °F	COOLER LEAVING FLUID	
	▼	OAT	XXX.X °F	OUTSIDE AIR TEMPERATURE	
	▼	SPT	XXX.X °F	SPACE TEMPERATURE	
	▼	CNDE	XXX.X °F	CONDENSER ENTERING FLUID	
	▼	CNDL	XXX.X °F	CONDENSER LEAVING FLUID	
	▼	DLWT	XXX.X °F	LEAD/LAG LEAVING FLUID	
CIR.A	ENTER	SCT.A	XXX.X °F	SATURATED CONDENSING TMP	
	▼	SST.A	XXX.X °F	SATURATED SUCTION TEMP	
	▼	SH.A	XXX.X ^F	DISCHARGE SUPERHEAT TEMP	
	▼	DGT.A	XXX.X °F	DISCHARGE GAS TEMP	
	▼	MT.A1	XXX.X °F	A1 MOTOR TEMPERATURE	
	▼	MT.A2	XXX.X °F	A2 MOTOR TEMPERATURE	
CIR.B	ENTER	SCT.B	XXX.X °F	SATURATED CONDENSING TMP	
	▼	SST.B	XXX.X °F	SATURATED SUCTION TEMP	
	▼	SH.B	XXX.X ^F	DISCHARGE SUPERHEAT TEMP	
	▼	DGT.B	XXX.X °F	DISCHARGE GAS TEMP	
	▼	MT.B1	XXX.X °F	B1 MOTOR TEMPERATURE	
	▼	MT.B2	XXX.X °F	B2 MOTOR TEMPERATURE	

Table 14 — Pressure Mode and Sub-Mode Directory

SUB-MODE	KEYPAD ENTRY	ITEM	DISPLAY	ITEM EXPANSION	COMMENT
PRC.A	ENTER	DP.A	XXX.X PSIG	DISCHARGE PRESSURE	
	▼	SP.A	XXX.X PSIG	SUCTION PRESSURE	
	▼	ECN.A	XXX.X PSIG	ECONOMIZER PRESSURE	
	▼	OP.A1	XXX.X PSIG	A1 OIL PRESSURE	
	▼	OP.A2	XXX.X PSIG	A2 OIL PRESSURE	
	▼	DO.A1	XXX.X PSI	A1 OIL PRESSURE DIFF.	Equals oil pressure minus Economizer pressure
	▼	DO.A2	XXX.X PSI	A2 OIL PRESSURE DIFF.	Equals oil pressure minus Economizer pressure
	▼	FD.A1	XXX.X PSI	A1 OIL FILTER DIFF. PRESS	Equals discharge pressure minus oil pressure
	▼	FD.A2	XXX.X PSI	A2 OIL FILTER DIFF. PRESS	Equals discharge pressure minus oil pressure
	▼	PS.A1	XX.X PSI	CALCULATED OIL PRESS A1	CKT A oil pressure setpoint 1 (See Table 30)
	▼	PS.A2	XX.X PSI	CALCULATED OIL PRESS A2	CKT A oil pressure setpoint 2 (See Table 30)
PRC.B	ENTER	DP.B	XXX.X PSIG	DISCHARGE PRESSURE	
	▼	SP.B	XXX.X PSIG	SUCTION PRESSURE	
	▼	ECN.B	XXX.X PSIG	ECONOMIZER PRESSURE	
	▼	OP.B1	XXX.X PSIG	B1 OIL PRESSURE	
	▼	OP.B2	XXX.X PSIG	B2 OIL PRESSURE	
	▼	DO.B1	XXX.X PSI	B1 OIL PRESSURE DIFF.	Equals oil pressure minus Economizer pressure
	▼	DO.B2	XXX.X PSI	B2 OIL PRESSURE DIFF.	Equals oil pressure minus Economizer pressure
	▼	FD.B1	XXX.X PSI	B1 OIL FILTER DIFF.	Equals discharge pressure minus oil pressure
	▼	FD.B2	XXX.X PSI	B2 OIL FILTER DIFF.	Equals discharge pressure minus oil pressure
	▼	PS.B1	XX.X PSI	CALCULATED OIL PRESS B1	CKT B oil pressure setpoint 1
	▼	PS.B2	XX.X PSI	CALCULATED OIL PRESS B2	CKT B oil pressure setpoint 2

Table 15 — Set Point Mode and Sub-Mode Directory

SUB-MODE	KEYPAD ENTRY	ITEM	DISPLAY	ITEM EXPANSION	COMMENT
COOL	ENTER	CSP.1	XXX.X °F	COOLING SETPOINT 1	Default: 44 F
	▼	CSP.2	XXX.X °F	COOLING SETPOINT 2	Default: 44 F
	▼	CSP.3	XXX.X °F	ICE SETPOINT	Default: 32 F
HEAT	ENTER	HSP.1	XXX.X °F	HEATING SETPOINT 1	Default: 100 F
	▼	HSP.2	XXX.X °F	HEATING SETPOINT 2	Default: 100 F
HEAD	ENTER	HD.P.A	XXX.X °F	HEAD PRESSURE SETPOINT A	Default: 113 F (30GX,HXA) 85 F (30HXC)
	▼	HD.P.B	XXX.X °F	HEAD PRESSURE SETPOINT B	Default: 113 F (30GX,HXA) 85 F (30HXC)
LIQ	ENTER	LVL.A	X.X	LIQUID LEVEL SETPOINT A	Default: 1.8
	▼	LVL.B	X.X	LIQUID LEVEL SETPOINT B	Default: 1.8

Table 16 — Inputs Mode and Sub-Mode Directory

SUB-MODE	KEYPAD ENTRY	ITEM	DISPLAY	ITEM EXPANSION	COMMENT
GEN.I	ENTER	STST	STRT/STOP	START/STOP SWITCH	
	▼	FLOW	ON/OFF	COOLER FLOW SWITCH	
	▼	CND.F	ON/OFF	CONDENSER FLOW SWITCH	
	▼	DLS1	ON/OFF	DEMAND LIMIT SWITCH 1	
	▼	DLS2	ON/OFF	DEMAND LIMIT SWITCH 2	
	▼	ICED	ON/OFF	ICE DONE	
	▼	DUAL	ON/OFF	DUAL SETPOINT SWITCH	
CRCT	ENTER	FKA1	ON/OFF	COMPRESSOR A1 FEEDBACK	
	▼	FKA2	ON/OFF	COMPRESSOR A2 FEEDBACK	
	▼	OIL.A	OPEN/CLSE	OIL LEVEL SWITCH	
	▼	LEV.A	X.X	COOLER LEVEL INDICATOR	
	▼	A1.CR	XXX AMPS	COMP A1 RUNNING CURRENT	
	▼	A2.CR	XXX AMPS	COMP A2 RUNNING CURRENT	
	▼	FKB1	ON/OFF	COMPRESSOR B1 FEEDBACK	
	▼	FKB2	ON/OFF	COMPRESSOR B2 FEEDBACK	
	▼	OIL.B	OPEN/CLSE	OIL LEVEL SWITCH	
	▼	LEV.B	X.X	COOLER LEVEL INDICATOR	
	▼	B1.CR	XXX AMPS	COMP B1 RUNNING CURRENT	
	▼	B2.CR	XXX AMPS	COMP B2 RUNNING CURRENT	
4-20	ENTER	DMND	XX.X MA	4-20 MA DEMAND SIGNAL	
	▼	RSET	XX.X MA	4-20 MA RESET SIGNAL	
	▼	CSP	XX.X MA	4-20 MA COOLING SETPOINT	
	▼	HSP	XX.X MA	4-20 MA HEATING SETPOINT	

Table 17 — Outputs Mode and Sub-Mode Directory

SUB-MODE	KEYPAD ENTRY	ITEM	DISPLAY	ITEM EXPANSION	COMMENT
GEN.O	ENTER	FAN1	ON/OFF	FAN 1 RELAY	
	▼	FAN2	ON/OFF	FAN 2 RELAY	
	▼	FAN3	ON/OFF	FAN 3 RELAY	
	▼	FAN4	ON/OFF	FAN 4 RELAY	
	▼	MLV	ON/OFF	MINIMUM LOAD VALVE	
	▼	C.PMP	ON/OFF	COOLER PUMP RELAY	
	▼	C.HT	ON/OFF	COOLER HEATER	
	▼	CNDP	ON/OFF	CONDENSER PUMP RELAY	
	▼	SMZ	X.X	LOAD/UNLOAD FACTOR	
CIR.A	ENTER	CC.A1	ON/OFF	COMPRESSOR A1 RELAY	
	▼	CC.A2	ON/OFF	COMPRESSOR A2 RELAY	
	▼	LD.A1	ON/OFF	LOADER A1 RELAY	
	▼	LD.A2	ON/OFF	LOADER A2 RELAY	
	▼	OL.P.A	ON/OFF	OIL PUMP	
	▼	MC.A1	ON/OFF	MOTOR COOLING A1 SOLENOID	
	▼	MC.A2	ON/OFF	MOTOR COOLING A2 SOLENOID	
	▼	OL.H.A	ON/OFF	OIL HEATER	
	▼	OL.A1	ON/OFF	OIL SOLENOID A1	
	▼	OL.A2	ON/OFF	OIL SOLENOID A2	
	▼	EXV.A	XXX %	EXV % OPEN	
	▼	VH.PA	XXX %	VARIABLE HEAD PRESS %	
CIR.B	ENTER	CC.B1	ON/OFF	COMPRESSOR B1 RELAY	
	▼	CC.B2	ON/OFF	COMPRESSOR B2 RELAY	
	▼	LD.B1	ON/OFF	LOADER B1 RELAY	
	▼	LD.B2	ON/OFF	LOADER B2 RELAY	
	▼	OL.P.B	ON/OFF	OIL PUMP	
	▼	MC.B1	ON/OFF	MOTOR COOLING B1 SOLENOID	
	▼	MC.B2	ON/OFF	MOTOR COOLING B2 SOLENOID	
	▼	OL.H.B	ON/OFF	OIL HEATER	
	▼	OL.B1	ON/OFF	OIL SOLENOID B1	
	▼	OL.B2	ON/OFF	OIL SOLENOID B2	
	▼	EXV.B	XXX %	EXV % OPEN	
	▼	VH.PB	XXX %	VARIABLE HEAD PRESS %	

Table 18 — Operating Mode and Sub-Mode Directory

SUB-MODE	KEYPAD ENTRY	ITEM	DISPLAY	ITEM EXPANSION	COMMENT
MODE	ENTER	MD01	ON/OFF	CSM CONTROLLING CHILLER	
	▼	MD02	ON/OFF	WSM CONTROLLING CHILLER	
	▼	MD03	ON/OFF	MASTER/SLAVE CONTROL	
	▼	MD04	ON/OFF	LOW SOURCE PROTECTION	
	▼	MD05	ON/OFF	RAMP LOAD LIMITED	
	▼	MD06	ON/OFF	TIMED OVERRIDE IN EFFECT	
	▼	MD07	ON/OFF	LOW COOLER SUCTION TEMPA	
	▼	MD08	ON/OFF	LOW COOLER SUCTION TEMPB	
	▼	MD09	ON/OFF	SLOW CHANGE OVERRIDE	
	▼	MD10	ON/OFF	MINIMUM OFF TIME ACTIVE	
	▼	MD11	ON/OFF	LOW DISCHRGE SUPERHEAT A	
	▼	MD12	ON/OFF	LOW DISCHRGE SUPERHEAT B	
	▼	MD13	ON/OFF	DUAL SETPOINT	
	▼	MD14	ON/OFF	TEMPERATURE RESET	
	▼	MD15	ON/OFF	DEMAND LIMIT IN EFFECT	
	▼	MD16	ON/OFF	COOLER FREEZE PROTECTION	
	▼	MD17	ON/OFF	LOW TMP COOL/HI TMP HEAT	
	▼	MD18	ON/OFF	HI TMP COOL/LO TMP HEAT	
	▼	MD19	ON/OFF	MAKING ICE	
	▼	MD20	ON/OFF	STORING ICE	
	▼	MD21	ON/OFF	HIGH SCT CIRCUIT A	
	▼	MD22	ON/OFF	HIGH SCT CIRCUIT B	
	▼	MD23	ON/OFF	HIGH MOTOR CURRENT CIR. A	
	▼	MD24	ON/OFF	HIGH MOTOR CURRENT CIR. B	
	▼	MD25	ON/OFF	CKT A OFF REF FLOW DELAY*	
	▼	MD26	ON/OFF	CKT B OFF REF FLOW DELAY*	
	▼	MD27	ON/OFF	CIRCUIT A — PUMPING OUT	SHUTDOWN IN PROGRESS
	▼	MD28	ON/OFF	CIRCUIT B — PUMPOUT OUT	SHUTDOWN IN PROGRESS

*Recycle restart pending 15-minute delay due to loss of refrigerant flow detected at start-up.

Table 19 — Run Status Mode and Sub-Mode Directory

SUB-MODE	KEYPAD ENTRY	ITEM	DISPLAY	ITEM EXPANSION	COMMENT
VIEW	ENTER	EWT	XXX.X °F	ENTERING FLUID TEMP	
	▼	LWT	XXX.X °F	LEAVING FLUID TEMP	
	▼	SETP	XXX.X °F	ACTIVE SETPOINT	
	▼	CTPT	XXX.X °F	CONTROL POINT	
	▼	STAT	X	CONTROL MODE	SERVICE TEST OFF LOCAL OFF CCN OFF TIME OFF EMRGCY ON LOCAL ON CCN ON TIME
	▼	OCC	YES/NO	OCCUPIED	
	▼	MODE	YES/NO	OVERRIDE MODES IN EFFECT	
	▼	CAP	XXX %	PERCENT TOTAL CAPACITY	
	▼	ALRM	XXX	CURRENT ALARMS & ALERTS	
	▼	TIME	XX.XX	TIME OF DAY	00.00-23.59
	▼	MNTH	XX	MONTH OF YEAR	January, February, etc.
	▼	DATE	XX	DAY OF MONTH	01-31
	▼	YEAR	XX	YEAR	
RUN	ENTER	HRS.U	XXXX HRS	MACHINE OPERATING HOURS	
	▼	STR.U	XXXX	MACHINE STARTS	
HOUR	ENTER	HRS.A	XXXX HRS	CIRCUIT A RUN HOURS	
	▼	HRS.B	XXXX HRS	CIRCUIT B RUN HOURS	
	▼	HR.A1	XXXX HRS	COMPRESSOR A1 RUN HOURS	
	▼	HR.A2	XXXX HRS	COMPRESSOR A2 RUN HOURS	
	▼	HR.B1	XXXX HRS	COMPRESSOR B1 RUN HOURS	
	▼	HR.B2	XXXX HRS	COMPRESSOR B2 RUN HOURS	
STRT	ENTER	STR.A	XXXX	CIRCUIT A STARTS	
	▼	ST.A1	XXXX	COMPRESSOR A1 STARTS	
	▼	ST.A2	XXXX	COMPRESSOR A2 STARTS	
	▼	STR.B	XXXX	CIRCUIT B STARTS	
	▼	ST.B1	XXXX	COMPRESSOR B1 STARTS	
	▼	ST.B2	XXXX	COMPRESSOR B2 STARTS	
VERS	ENTER	MBB		CESR-131248-xx-xx	xx-xx is Version number
	▼	EXV		CESR-131172-xx-xx	xx-xx is Version number
	▼	EMM		CESR-131174-xx-xx	xx-xx is Version number
	▼	CP1		100233-1R1-xx-xx	xx-xx is Version number
	▼	CP2		100233-1R1-xx-xx	xx-xx is Version number
	▼	SCB		CESR-131226-xx-xx	xx-xx is Version number
	▼	NAVI		CESR-131227-xx-xx	xx-xx is Version number

Table 20 — How to Adjust Navigator Backlight from Configuration Mode

SUB-MODE	KEYPAD ENTRY	ITEM	DISPLAY	ITEM EXPANSION	COMMENT
DISP	ENTER	TEST	ON/OFF	TEST DISPLAY LEDS	
	ENTER		Enter Password 1111		Enter password as required using ENTER key after each number.
		TEST	OFF		'OFF' will be flashing.
	▲	TEST	ON		Change value to 'ON' ('ON' flashes).
	ENTER	TEST	ON		Display Test is Enabled. The alarm and all mode LED's light up. The Navigator will display all block segments.
	▲ ▼				Press arrow keys at the same time. The Navigator will display 'Adjust Brightness.'
	▲ ▼				Use the up arrow key to brighten the backlight and the down arrow key to dim the backlight. Press the ESCAPE key when finished to exit the mode.

Table 21 — How to Adjust Navigator Contrast from Configuration Mode

SUB-MODE	KEYPAD ENTRY	ITEM	DISPLAY	ITEM EXPANSION	COMMENT
DISP	ENTER	TEST	ON/OFF	TEST DISPLAY LEDS	
	ENTER		Enter Password 1111		Enter password as required using ENTER key after each number.
		TEST	OFF		'OFF' will be flashing
	▲	TEST	ON		Change value to 'ON' ('ON' flashes).
	ENTER	TEST	ON		Display Test is Enabled. The alarm and all mode LED's light up. The Navigator will display all block segments.
	ENTER ESCAPE				Press Enter and Escape keys at the same time. The Navigator will display 'ADJUST CONTRAST' with a percentage indication.
	▲ ▼				Use the up arrow key to increase contrast and the down arrow key to decrease the contrast. Press the ESCAPE key when finished to exit the mode.

Table 22 — Time Clock Mode and Sub-Mode Directory

SUB-MODE	KEYPAD ENTRY	ITEM	DISPLAY	ITEM EXPANSION	COMMENT
TIME	ENTER	HH.MM	XX.XX	HOUR AND MINUTE	Military (00:00 — 23:59)
DATE	▼	MNTH	XX	MONTH OF YEAR	January, February, etc.
	▼	DOM	XX	DAY OF MONTH	Range: 01-31
	▼	DAY	X	DAY OF WEEK	Monday, Tuesday, etc.
	▼	YEAR	XXXX	YEAR	
SCHD	ENTER	MON.O	XX.XX	MONDAY OCCUPIED TIME	Default: 00.00 Range: 00.00 to 23.59
	▼	MON.U	XX.XX	MONDAY UNOCCUIPED TIME	Default: 00.00 Range: 00.00 to 23.59
	▼	TUE.O	XX.XX	TUESDAY OCCUPIED TIME	Default: 00.00 Range: 00.00 to 23.59
	▼	TUE.U	XX.XX	TUESDAY UNOCCUPIED TIME	Default: 00.00 Range: 00.00 to 23.59
	▼	WED.O	XX.XX	WEDNESDAY OCCUPIED TIME	Default: 00.00 Range: 00.00 to 23.59
	▼	WED.U	XX.XX	WEDNESDAY UNOCCUPIED TIME	Default: 00.00 Range: 00.00 to 23.59
	▼	THU.O	XX.XX	THURSDAY OCCUPIED TIME	Default: 00.00 Range: 00.00 to 23.59
	▼	THU.U	XX.XX	THURSDAY UNOCCUPIED TIME	Default: 00.00 Range: 00.00 to 23.59
	▼	FRI.O	XX.XX	FRIDAY OCCUPIED TIME	Default: 00.00 Range: 00.00 to 23.59
	▼	FRI.U	XX.XX	FRIDAY UNOCCUPIED TIME	Default: 00.00 Range: 00.00 to 23.59
	▼	SAT.O	XX.XX	SATURDAY OCCUPIED TIME	Default: 00.00 Range: 00.00 to 23.59
	▼	SAT.U	XX.XX	SATURDAY UNOCCUPIED TIME	Default: 00.00 Range: 00.00 to 23.59
	▼	SUN.O	XX.XX	SUNDAY OCCUPIED TIME	Default: 00.00 Range: 00.00 to 23.59
	▼	SUN.U	XX.XX	SUNDAY UNOCCUPIED TIME	Default: 00.00 Range: 00.00 to 23.59

Table 23 — Example of Configuring Dual Chiller Control

SUB-MODE	KEYPAD ENTRY	ITEM	DISPLAY	ITEM EXPANSION	COMMENT
RSET	ENTER	CRST	0	COOLING RESET TYPE	
	▼	PARA	NO		Parallel Configuration
	ENTER	PARA	NO		Value flashes
	▼	PARA	YES		Select yes for parallel fluid flow
	ENTER	PARA	YES		Change accepted
	▼	LLDY	5	LAG START DELAY	
	ENTER	LLDY	5		Value flashes
	▼	LLDY	10		Select 10
	ENTER	LLDY	10		Change accepted
	ESCAPE	LLDY	10		
	▼	LLBD	168	LEAD/LAG BALANCE DELTA	No change needed. Default set for weekly changeover.
	▼	LLBL	AUTO	LEAD/LAG BALANCE SELECT	
	ENTER	LLBL	AUTO		Value flashes
	▼	LLBL	MAST		Select Master Leads
	ENTER	LLBL	MAST		Change accepted
	ESCAPE	LLBL	MAST		
	▼	SLVA	0	SLAVE ADDRESS	
	ENTER	SLVA	0		Value flashes
	▼	SLVA	2		Select 2
	ENTER	SLVA	2		Change accepted
	ESCAPE	SLVA	2		
	▼	MSSL	MAST	MASTER/SLAVE SELECT	No change needed. Default set for Master.
	▼	LLEN	DSBL	LEAD/LAD CHILLER ENABLE	
	ENTER	LLEN	DSBL		Value flashes
	▼	LLEN	ENBL		Enable Dual Chiller Control
	ENTER	LLEN	ENBL		Change accepted
	ESCAPE	LLEN	ENBL		
	ESCAPE	RSET			Configuration sub-mode menu returns

Alarms/Alerts — Alarms and alerts are messages that one or more faults have been detected. The alarms and alerts indicate failures that cause the unit to shut down, terminate an option (such as reset) or result in the use of a default value such as a set point. Refer to the Troubleshooting section for more information.

Up to 25 alarms/alerts can be displayed in currently active alarms. Up to 50 alarms/alerts can be stored in the alarm history. See Tables 24 and 25 to view and clear alarms.

> IMPORTANT: Do not clear the alarms without first reviewing the full list and investigating and correcting the cause of the alarms.

When an alarm or alert is stored in the display and the machine automatically resets, the alarm/alert is deleted. Codes for safeties which do not automatically reset are not deleted until the problem is corrected and the machine is reset. To clear manual reset alarms from the CCP modules, press the reset button located on the CCP board generating the alarm, for 5 seconds, (CCP1 for compressors A1 or B1, CCP2 for compressors A2 or B2). Next, follow the example in Table 26 to clear the alarm from the Main Base Board (MBB) history.

Run Hours and Starts — The HOUR and STRT submodes under the Run Status mode contain items for number of hours for each circuit and each compressor and the total number of starts for each compressor. All items are password protected, but can be changed if a replacement MBB is installed.

Press ENTER to make the current value flash. Use the arrow keys to configure the correct value and press the ENTER key again. Record the current values from the MBB before removing the module or downloading new software.

Temperature Reset — The control system is capable of handling leaving-fluid temperature reset based on return cooler fluid temperature. Because the change in temperature through the cooler is a measure of the building load, the return temperature reset is in effect an average building load reset method. The control system is also capable of temperature reset based on outdoor-air temperature (OAT), space temperature (SPT), or from an externally powered 4 to 20 mA signal. Accessory sensors must be used for OAT and SPT reset (HH79NZ023 for OAT and HH51BX006 for SPT). The Energy Management Module (EMM) must be used for temperature reset using a 4 to 20 mA signal.

To use the return reset, four variables must be configured. In the Configuration mode under the sub-mode RSET, items CRST, CRT1, CRT2, and DGRC must be set properly. See Tables 26 and 27 on page 35 for correct configuration. See Fig. 2 and 3 for compressor wiring details.

To reset the return fluid temperature, the unit set point is reset from full load based on the chilled fluid return temperature. The example uses a reset value of 10 degrees at full reset. Full reset is at a 2-degree temperature difference across the cooler and no reset would be at a 10 F difference across the cooler. See Fig. 13 and Table 28.

Under normal operation, the chiller will maintain a constant leaving fluid temperature approximately equal to the chilled fluid set point. As the cooler load varies, the entering cooler fluid will change in proportion to the load as shown in Fig. 10. Usually the chiller size and leaving-fluid temperature set point are selected based on a full-load condition. At part load, the fluid temperature set point may be colder than required. If the leaving fluid temperature was allowed to increase at part load, the efficiency of the machine would increase.

Return temperature reset allows for the leaving temperature set point to be reset upward as a function of the return fluid temperature or, in effect, the building load.

Figure 10 is an example of no reset. Figures 11, 12, and 13 are examples of outdoor air, space and return water temperature resets.

Table 24 — Alarms Mode and Sub-Mode Directory

SUB-MODE	KEYPAD ENTRY	ITEM	ITEM EXPANSION	COMMENT
CRNT	ENTER	AXXX or TXXX	CURRENTLY ACTIVE ALARMS	Alarms are shown as AXXX. Alerts are shown as TXXX.
RCRN	ENTER	YES/NO	RESET ALL CURRENT ALARMS	
HIST	ENTER	AXXX or TXXX	ALARM HISTORY	Alarms are shown as AXXX. Alerts are shown as TXXX.

Table 25 — Example of Reading and Clearing Alarms

SUB-MODE	KEYPAD ENTRY	ITEM	ITEM EXPANSION	COMMENT
CRNT	ENTER	AXXX or TXXX	CURRENTLY ACTIVE ALARMS	ACTIVE ALARMS (AXXX) OR ALERTS (TXXX) DISPLAYED.*
CRNT	ESCAPE			
RCRN	▼	NO		Use to clear active alarms/alerts
	ENTER	NO		NO Flashes
	▲	YES		Select YES
	ENTER	NO		Alarms/alerts clear, YES changes to NO

*Press ENTER and ESCAPE simultaneously to display expanded alarm description.

Table 26 — Configuring Temperature Reset

MODE	KEYPAD ENTRY	SUB-MODE	KEYPAD ENTRY	ITEM	DISPLAY	ITEM EXPANSION	COMMENT
CONFIGURATION	ENTER	DISP	ENTER	TEST	ON/OFF	TEST DISPLAY LEDs	
	▼	UNIT	ENTER	TYPE	X	UNIT TYPE	
	▼	OPT1	ENTER	FLUD	X	COOLER FLUID	
	▼	OPT2	ENTER	CTRL	X	CONTROL METHOD	
	▼	RSET	ENTER	CRST	X	COOLING RESET TYPE	0 = No Reset 1 = 4 to 20 mA Input (EMM required) (Connect to EMM J6-2,5) 2 = Outdoor-Air Temperature (Connect to TB5-7,8) 3 = Return Fluid 4 = Space Temperature (Connect to TB5-5,6)
			▼	CRT1	XXX.X F	NO COOL RESET TEMP	Default: 125 F (51.7 C) Range: 0° to125 F Set to 4.0 for CRST= 1 No Cool Reset ΔT for CRST=3
			▼	CRT2	XXX.X F	FULL COOL RESET TEMP	Default: 0° F (–17.8 C) Range: 0° to 125 F Set to 20.0 for CRST=1 Full Cool Reset ΔT for CRST=3
			▼	DGRC	XX.X ΔF	DEGREES COOL RESET	Default: 0° F (0° C) Range: –30 to 30 F (–16.7 to 16.7 C)

Table 27 — Return Water Reset

SUB-MODE	KEYPAD ENTRY	ITEM	DISPLAY	ITEM EXPANSION	COMMENT
RSET	ENTER	CRST	3	COOLING RESET TYPE	0 = no reset 1 = 4 to 20 mA input 2 = Outdoor air temp 3 = Return Fluid 4 = Space Temperature
	▼	CRT1	10.0 F (5.5 C)	NO COOL RESET TEMP	Default: 125 F (51.7 C) Range: 0° to 125 F
	▼	CRT2	2.0 F (1.1 C)	FULL COOL RESET TEMP	Default: 0° F (–17.8 C) Range: 0° to 125 F
	▼	DGRC	5.0 ΔF (2.8 ΔC)	DEGREES COOL RESET	Default: 0°F (0° C) Range: –30 to 30 F (–16.7 to 16.7 C)

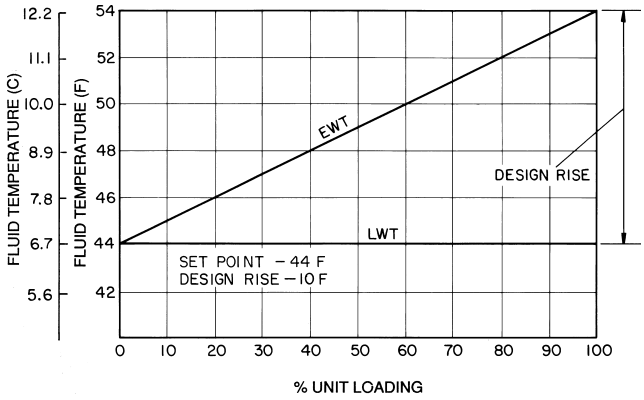

LEGEND

EWT — Entering Water (Fluid) Temperature
LWT — Leaving Water (Fluid) Temperature

Fig. 10 — Cooling Return Water — No Reset

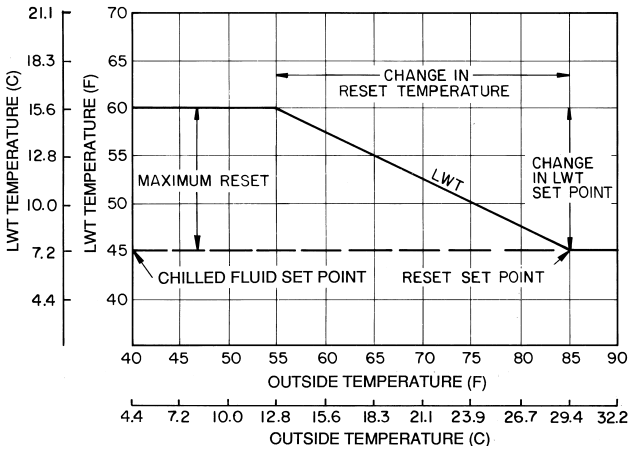

LEGEND

LWT — Leaving Water (Fluid) Temperature

Fig. 11 — Outdoor-Air Temperature Reset

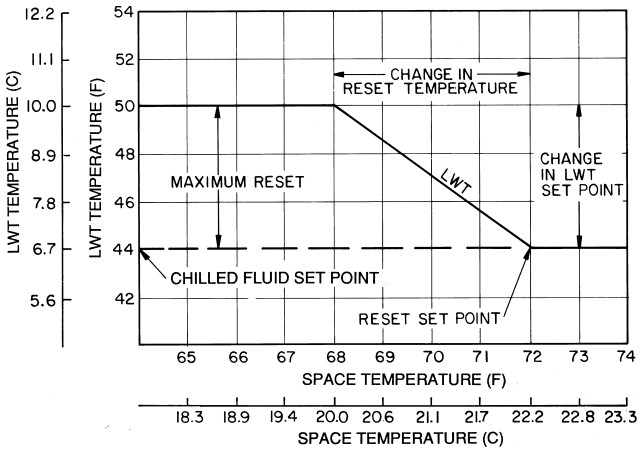

LEGEND

LWT — Leaving Water (Fluid) Temperature

Fig. 12 — Space Temperature Reset

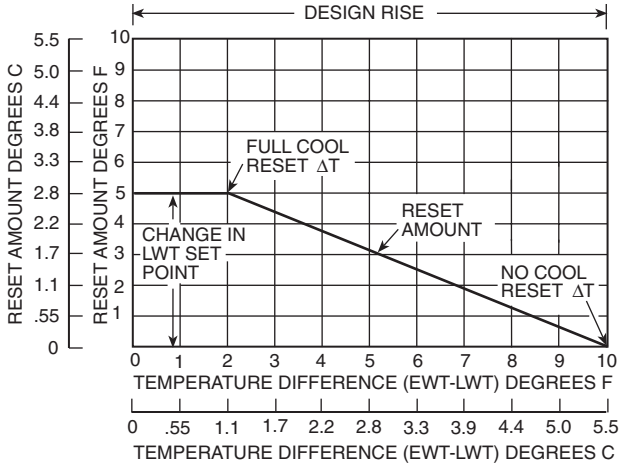

LEGEND

EWT — Entering Water (Fluid) Temperature
LWT — Leaving Water (Fluid) Temperature

Fig. 13 — Return Water Reset

Demand Limit — Demand Limit is a feature that allows the unit capacity to be limited during periods of peak energy usage. There are 3 types of demand limiting that can be configured. The first type is through 2-stage switch control, which will reduce the maximum capacity to 2 user-configurable percentages. The second type is by 4 to 20 mA signal input which will reduce the maximum capacity linearly between 100% at a 4 mA input signal (no reduction) down to the user-configurable level at a 20 mA input signal. The third type uses the CCN Loadshed module and has the ability to limit the current operating capacity to maximum and further reduce the capacity if required.

NOTE: The 2-stage switch control and 4- to 20-mA input signal types of demand limiting require the Energy Management Module (EMM).

To use Demand Limit, select the type of demand limiting to use. Then configure the Demand Limit set points based on the type selected.

DEMAND LIMIT (2-Stage Switch Controlled) — To configure Demand Limit for 2-stage switch control set the Demand Limit Select (DMDC) to 1. Then configure the 2 Demand Limit Switch points (DLS1 and DLS2) to the desired capacity limit. See Table 28. Capacity steps are controlled by 2 relay switch inputs field wired to TB6.

For Demand Limit by 2-stage switch control, closing the first stage demand limit contact will put the unit on the first demand limit level. The unit will not exceed the percentage of capacity entered as Demand Limit Switch 1 set point. Closing contacts on the second demand limit switch prevents the unit from exceeding the capacity entered as Demand Limit Switch 2 set point. The demand limit stage that is set to the lowest demand takes priority if both demand limit inputs are closed. If the demand limit percentage does not match unit staging, the unit will limit capacity to the closest capacity stage.

To disable demand limit configure the DMDC to 0. See Table 28.

EXTERNALLY POWERED DEMAND LIMIT (4 to 20 mA Controlled) — To configure Demand Limit for 4 to 20 mA control set the Demand Limit Select (DMDC) to 2. Then configure the Demand Limit at 20 mA (DM20) to the maximum loadshed value desired. The control will reduce allowable capacity to this level for the 20 mA signal.

DEMAND LIMIT (CCN Loadshed Controlled) — To configure Demand Limit for CCN Loadshed control set the Demand Limit Select (DMDC) to 3. Then configure the Loadshed Group Number (SHNM), Loadshed Demand Delta (SHDL), and Maximum Loadshed Time (SHTM). See Table 28.

The Loadshed Group number is established by the CCN system designer. The *Comfort*Link™ Control will respond to a Redline command from the Loadshed control. When the Redline command is received, the current stage of capacity is set to the maximum stages available. Should the loadshed control send a Loadshed command, the *Comfort*Link Control will reduce the current stages by the value entered for Loadshed Demand delta. The Maximum Loadshed Time is the defines the maximum length of time that a loadshed condition is allowed to exist. The control will disable the Redline/Loadshed command if no Cancel command has been received within the configured maximum loadshed time limit.

Cooling Set Point (4 to 20 mA) — Unit operation is based on an external 4 to 20 mA signal input to the Energy Management Module (EMM). The signal is connected to TB6-3,5 (+,–). Figure 14 shows how the 4 to 20 mA signal is linearly calculated on an overall 10 F to 80 F for both Water and Medium Temperature Brine COOLER FLUID configurations. See Table 29 for configuration instructions.

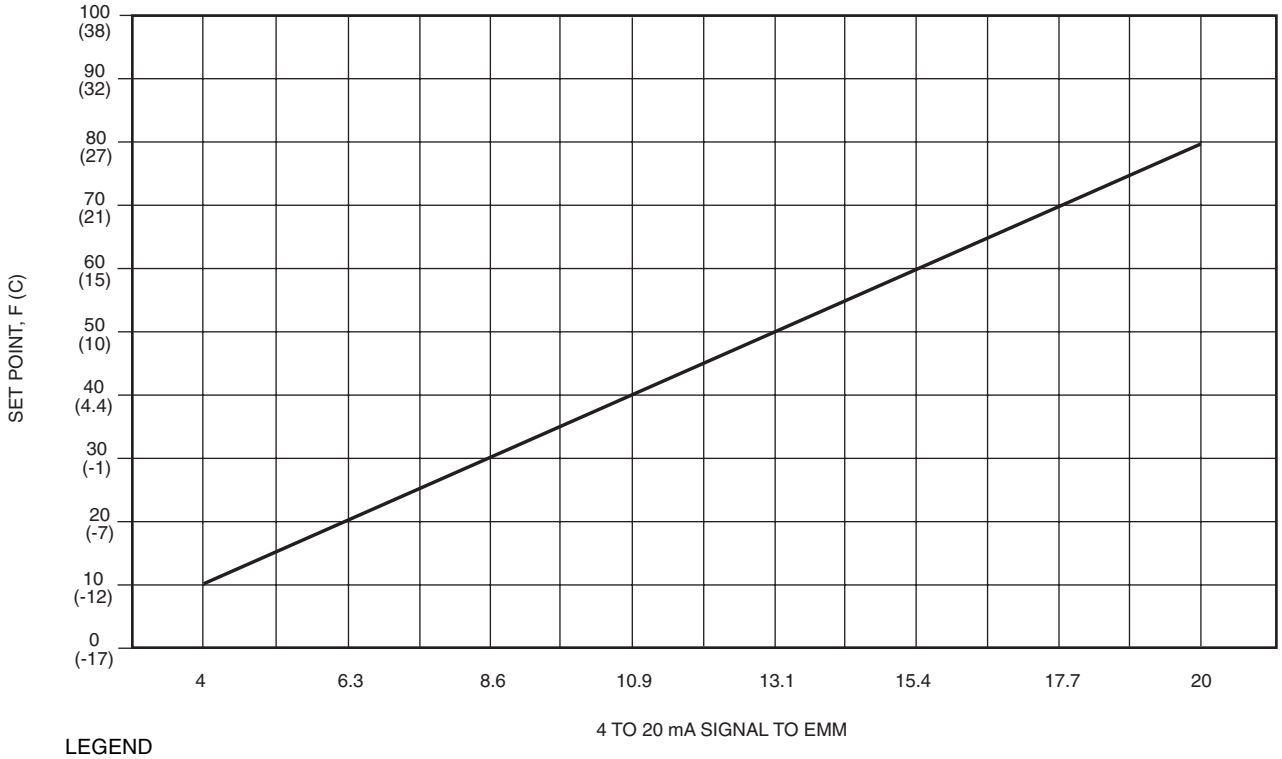

LEGEND
EMM — Energy Management Module

Fig. 14 — Cooling Set Point (4 to 20 mA)

Table 28 — Configuring Demand Limit

MODE	KEYPAD ENTRY	SUB-MODE	KEYPAD ENTRY	ITEM	DISPLAY	ITEM EXPANSION	COMMENT
CONFIGURATION	ENTER	DISP	ENTER	TEST	ON/OFF	Test Display LEDs	
	▼	UNIT	ENTER	TYPE	X	Unit Type	
	▼	OPT1	ENTER	FLUD	X	Cooler Fluid	
	▼	OPT2	ENTER	CTRL	X	Control Method	
	▼	RSET	ENTER	CRST	X	Cooling Reset Type	
			▼	CRT1	XXX.X °F	No Cool Reset Temperature	
			▼	CRT2	XXX.X °F	Full Cool Reset Temperature	
			▼	DGRC	XX.X ΔF	Degrees Cool Reset	
			▼	DMDC	X	Demand Limit Select	Default: 0 0 = None 1 = Switch 2 = 4 to 20 mA Input 3 = CCN Loadshed
			▼	DM20	XXX %	Demand Limit at 20 mA	Default: 100% Range: 0 to 100
			▼	SHNM	XXX	Loadshed Group Number	Default: 0 Range: 0 to 99
			▼	SHDL	XXX%	Loadshed Demand Delta	Default: 0% Range: 0 to 60%
			▼	SHTM	XXX MIN	Maximum Loadshed Time	Default: 60 min. Range: 0 to 120 min.
			▼	DLS1	XXX %	Demand Limit Switch 1	Default: 80% Range: 0 to 100%
			▼	DLS2	XXX%	Demand Limit Switch 2	Default: 50% Range: 0 to 100%

NOTE: Heating reset values skipped in this example.

Table 29 — Menu Configuration of 4 to 20 mA Cooling Set Point Control

MODE (RED LED)	KEYPAD ENTRY	SUB-MODE	KEYPAD ENTRY	ITEM	DISPLAY	ITEM EXPANSION	COMMENT
CONFIGURATION	ENTER	DISP					
	▼	UNIT					
	▼	OPT1					
	▼	OPT2					
	▼	RSET					
	▼	SLCT	ENTER	CLSP	0	COOLING SETPOINT SELECT	
			ENTER		0		Scrolling Stops
			ENTER		0		Flashing ‘0’
			▲		4		Select ‘4’
			ENTER		4		Change Accepted

TROUBLESHOOTING

The 30GXN,R and 30HX screw chiller control has many features to aid in troubleshooting. By using the Navigator control, operating conditions of the chiller can be viewed while the chiller is running. The Service Test function allows for testing of all outputs and compressors. Verify that the chiller is properly configured, including options and/or accessories, using the Configuration mode. For checking specific items, refer to the Mode/Sub-Mode directory (Table 10).

Checking Display Codes — To determine how the machine has been programmed to operate, check the diagnostic information displayed in the Status function and the configuration information displayed in the Service function.

Unit Shutoff — To shut the unit off, move the Enable/Off/Remote Contact switch to the Off position. Both circuits will complete a pumpdown cycle and all compressors and solenoids will shut off. For extreme cases, move the Emergency On/Off switch to the Off position. All compressors, solenoids and other outputs will stop immediately.

Complete Unit Stoppage — Complete unit stoppage can be caused by any of the following conditions:

- cooling load satisfied
- remote on/off contacts open
- programmed schedule
- emergency stop command from CCN
- general power failure
- blown fuse in control power feed disconnect
- open control circuit fuse(s)
- Enable/Off/Remote Contact switch moved to Off position
- freeze protection trip
- low flow protection trip
- open contacts in chilled water flow switch
- Open contacts in any auxiliary interlock. Terminals that are jumpered from factory are in series with control switch. Opening the circuit between these terminals places unit in Stop mode, similar to moving the control switch to Off position. Unit cannot start if these contacts are open. If they open while unit is running, the unit stops
- cooler entering or leaving fluid thermistor failure
- low/high transducer supply voltage
- loss of communications between the Main Base Board (MBB) and either the EXV board, SCB board or either CCP module
- low refrigerant pressure
- off-to-on delay is in effect

⚠ CAUTION

If a stoppage occurs more than once as a result of any of the above safety devices, determine and correct the cause before attempting another restart.

Single Circuit Stoppage — Single circuit stoppage can be caused by the following:

- low oil pressure
- open contacts in high pressure switch
- low refrigerant pressure
- thermistor failure
- transducer failure
- alarm condition from CCP module

Stoppage of one circuit by a safety device action does not affect other circuit. When a safety device trips, the circuit is shut down immediately and EXV closes. Refer to Table 30 for typical stoppage faults and reset types.

⚠ CAUTION

If a stoppage occurs more than once as a result of any of the preceding safety devices, determine and correct the cause before attempting another restart.

Restart Procedure — After the cause for stoppage has been corrected, restart is either automatic or manual, depending on the fault. Manual reset requires that the alarm(s) be reset via the Navigator. Select the RCRN item under the Alarms mode. Press ENTER, ▲ and ENTER again to reset all current alarms and alerts. A password entry may be required. Some typical fault conditions are described in Table 30. For a complete list of fault conditions, codes and reset type, see Table 31, page 40.

POWER FAILURE EXTERNAL TO THE UNIT — Unit restarts automatically when power is restored.

Alarms and Alerts — These are warnings of abnormal or fault conditions and may cause either one circuit or the whole unit to shut down. They are assigned code numbers and a detailed description of each alarm/alert code error including possible causes is shown in Table 31. The alarm descriptions are displayed on the Navigator under the 'CRNT' or 'HIST' sub-modes of the Alarms mode. The Main Base Board also recognizes and reports illegal configurations as shown in Table 31.

When an alarm or alert is activated configurable, the alarm relay output (MBB relay K7, terminals TB5-11,12) is energized. The alarms and alerts indicate failures that cause the unit to shut down, terminate an option (such as reset) or result in the use of a default value such as a set point. Refer to Table 31 for more information.

Up to 50 alarms/alerts can be stored at once. Use Alarm and Alert tables to view and clear alarms. *Comfort*Link™ Compressor Protection (CCP) module alarms require an additional step to reset alarms. To clear these alarms, first find and correct the cause of the alarm. Then press and hold the reset button on the CCP board for 5 seconds. This action will reset only the alarmed circuit or compressor, and clear the CCP. Next, reset the alarm(s) using the Navigator as shown in Table 26. For configuration header fault alarms from the CCP module, move the Enable/Off/Remote Contact switch to the Off position. Wait for all compressors to stop. Turn off the unit control power. Correct the configuration header problem and restore unit control power.

Table 30 — Typical Stoppage Faults and Reset Types

STOPPAGE FAULT	RESET TYPE
Loss of Condenser Flow (30HXC)	Manual reset
Cooler Freeze Protection (Chilled Fluid, Low Temperature)	Auto reset first time, manual if repeated in same day
Cooler Fluid Pump Interlock	Manual reset
Control Circuit Fuse Blown	Unit restarts automatically when power is restored
High-Pressure Switch Open	Manual reset
Low Sat. Suction Temperature	Manual reset after 1 hour
Low Oil Pressure	Manual reset
Loss of Communications with WSM or CSM Controller	Automatic reset

LEGEND

CSM — Chillervisor™ System Manager
WSM — Water System Manager

Compressor Alarm/Alert Circuit — Each compressor is directly controlled by a CCP module. Compressor faults (T051, T052, T055, T056) are reported as alerts. The specific fault condition for a compressor alert is included as part of the alert description displayed on the Navigator. Press ENTER and ESCAPE simultaneously to display description.

Table 31 — Alarm and Alert Codes

DESCRIPTION	ALARM OR ALERT	WHY WAS THIS ALARM GENERATED?	ACTION TAKEN BY CONTROL	RESET METHOD	PROBABLE CAUSE
High Pressure Switch Trip	Alert	HPS input to CCP module open	Comp. shut down	Manual	Loss of condenser air/water flow. Operation beyond chiller capability. Liquid valve not open.
No Motor Current	Alert	CCP reads less than 10% of MTA on all legs for >1.6 seconds	Comp. shut down	Manual	Power supply disconnected, blown fuse(s), wiring error, contactor not energized, faulty current toroid, check toroid wiring.
Current Unbalance	Alert	CCP measures current imbalance between phases must be above C.UNB for 25 minutes	Circuit shut down	Manual	Loose terminals on power wires. Alert will be generated if measured imbalance exceeds set point.
Single Phase Current Loss	Alert	CCP measures current imbalance between phases greater than 50% (running current <50% of MTA) or 30% (running current ≥ 50% of MTA) for 1 second.	Circuit shut down	Manual	Blown fuse, wiring error, loose terminals
High Motor Current	Alert	CCP detects high current compared to MTA setting	Comp. shut down	Manual	Operation beyond chiller capability, improperly punched configuration header, blown fuse
Ground Fault Trip	Alert	CCP detects ground current (2.5 ± 2.0 amps)	Comp. shut down	Manual	Motor winding(s) gone to ground, wiring error, loose plug connector.
Contactor Failure	Alert	CCP detects min. 10% of MTA for 10 seconds after shutting off compressor contactor. Oil solenoid is energized.	All remaining compressors shut down. All loaders deenergized. Min. load valve of affected circuit energized (if equipped)	Manual	Faulty contactor, contactor welded, wiring error.
Current Phase Reversal	Alert	CCP detects phase reversal from toroid reading or from incoming power supply.	Circuit shut down	Manual	Terminal block power supply leads not in correct phase. Toroid wire harness crossed. Check compressor contactor.
Motor Over Temperature	Alert	CCP detects motor winding temperature >245 F	Comp. shut down	Manual	Motor cooling (all) or Economizer (2 comp. circuits) solenoid failure, low refrigerant charge.
Open Thermistor	Alert	CCP detects open circuit in motor temp thermistor	Comp. shut down	Manual	Wiring error or faulty thermistor*
MTA Header Fault	Alert	CCP finds error with MTA value punched out in header.	Comp. shut down	Manual	Header pins on CCP board either all or none punched out, header not fully seated in CCP board.
MTA Value Error	Alert	MTA value stored in MBB does not agree with MTA header value from CCP.	Comp. not allowed to start	Manual	Header pin(s) on CCP board not punched out correctly. See Appendix A. Incorrect size or voltage entered when MBB was downloaded.
Shorted Thermistor	Alert	CCP detects short circuit in motor temp thermistor	Comp. shut down	Manual	Wiring error or faulty thermistor*

Table 31 — Alarm and Alert Codes (cont)

ALARM/ALERT CODE	ALARM OR ALERT	DESCRIPTION	WHY WAS THIS ALARM GENERATED?	ACTION TAKEN BY CONTROL	RESET METHOD	PROBABLE CAUSE
T026	Alert	Compressor A1 Low Oil Pressure – 1	P_O-P_e < Oil Set Point 1. See Note 1 and chart on page 45.	Comp A1 shut down	Manual	Low Water Temperature, low refrigerant charge, plugged oil filter, closed oil valve, bad oil solenoid, compressor oil check valve stuck, oil line check valve stuck, plugged oil strainer
		Compressor A1 Low Oil Pressure – 2	P_O-P_S < Oil Set Point 2. See Note 1 and chart on page 47.	Comp A1 shut down	Manual	Low Water Temperature, low refrigerant charge, plugged oil filter, closed oil valve, bad oil solenoid, compressor oil check valve stuck, oil line check valve stuck, plugged oil strainer
T027	Alert	Compressor A2 Low Oil Pressure – 1	P_O-P_e < Oil Set Point 1. See Note 1 and chart on page 47.	Comp A2 shut down	Manual	Low Water Temperature, low refrigerant charge, plugged oil filter, closed oil valve, bad oil solenoid, compressor oil check valve stuck, oil line check valve stuck, plugged oil strainer
		Compressor A2 Low Oil Pressure – 2	P_O-P_S < Oil Set Point 2. See Note 1 and chart on page 47.	Comp A2 shut down	Manual	Low Water Temperature, low refrigerant charge, plugged oil filter, closed oil valve, bad oil solenoid, compressor oil check valve stuck, oil line check valve stuck, plugged oil strainer
T028	Alert	Compressor B1 Low Oil Pressure – 1	P_O-P_e < Oil Set Point 1. See Note 1 and chart on page 47.	Comp B1 shut down	Manual	Low Water Temperature, low refrigerant charge, plugged oil filter, closed oil valve, bad oil solenoid, compressor oil check valve stuck, oil line check valve stuck, plugged oil strainer
		Compressor B1 Low Oil Pressure – 2	P_O-P_S < Oil Set Point 2. See Note 1 and chart on page 47.	Comp B1 shut down	Manual	Low Water Temperature, low refrigerant charge, plugged oil filter, closed oil valve, bad oil solenoid, compressor oil check valve stuck, oil line check valve stuck, plugged oil strainer
T029	Alert	Compressor B2 Low Oil Pressure – 1	P_O-P_e < Oil Set Point 1. See Note 1 and chart on page 47.	Comp B2 shut down	Manual	Low Water Temperature, low refrigerant charge, plugged oil filter, closed oil valve, bad oil solenoid, compressor oil check valve stuck, oil line check valve stuck, plugged oil strainer
		Compressor B2 Low Oil Pressure – 2	P_O-P_S < Oil Set Point 2. See Note 1 and chart on page 47.	Comp B2 shut down	Manual	Low Water Temperature, low refrigerant charge, plugged oil filter, closed oil valve, bad oil solenoid, compressor oil check valve stuck, oil line check valve stuck, plugged oil strainer
A030	Alarm	Compressor A1 Pre-Start Oil Pressure	Oil Pump did not build sufficient pressure during pre-lube cycle.	Compressor cannot start.	Manual	Low oil, oil pump failure, oil solenoid failure, oil transducer failure, check valve failed open, oil shutoff valve closed.
A031	Alarm	Compressor A2 Pre-Start Oil Pressure	Oil Pump did not build sufficient pressure during pre-lube cycle.	Compressor cannot start.	Manual	Low oil, oil pump failure, oil solenoid failure, oil transducer failure, check valve failed open, oil shutoff valve closed.
A032	Alarm	Compressor B1 Pre-Start Oil Pressure	Oil Pump did not build sufficient pressure during pre-lube cycle.	Compressor cannot start.	Manual	Low oil, oil pump failure, oil solenoid failure, oil transducer failure, check valve failed open, oil shutoff valve closed.
A033	Alarm	Compressor B2 Pre-Start Oil Pressure	Oil Pump did not build sufficient pressure during pre-lube cycle.	Compressor cannot start.	Manual	Low oil, oil pump failure, oil solenoid failure, oil transducer failure, check valve failed open, oil shutoff valve closed.

Table 31 — Alarm and Alert Codes (cont)

ALARM/ALERT CODE	ALARM OR ALERT	DESCRIPTION	WHY WAS THIS ALARM GENERATED?	ACTION TAKEN BY CONTROL	RESET METHOD	PROBABLE CAUSE
A034	Alarm	Comp. A1 Max. Oil Delta P, check oil line	(Discharge press – Oil press) > 100 PSI for more than 5 seconds	Comp. A1 shut down	Manual	Plugged oil filter, closed oil valve, bad oil solenoid, compressor oil check valve stuck, oil line check valve stuck, plugged oil strainer
A035	Alarm	Comp. A2 Max. Oil Delta P, check oil line	(Discharge press – Oil press) > 100 PSI for more than 5 seconds	Comp. A2 shut down	Manual	Plugged oil filter, closed oil valve, bad oil solenoid, compressor oil check valve stuck, oil line check valve stuck, plugged oil strainer
A036	Alarm	Comp. B1 Max. Oil Delta P, check oil line	(Discharge press – Oil press) > 100 PSI for more than 5 seconds	Comp. B1 shut down	Manual	Plugged oil filter, closed oil valve, bad oil solenoid, compressor oil check valve stuck, oil line check valve stuck, plugged oil strainer
A037	Alarm	Comp. B2 Max. Oil Delta P, check oil line	(Discharge press – Oil press) > 100 PSI for more than 5 seconds	Comp. B2 shut down	Manual	Plugged oil filter, closed oil valve, bad oil solenoid, compressor oil check valve stuck, oil line check valve stuck, plugged oil strainer
A038	Alarm	Comp. A1 Failed Oil Solenoid	Diff. Oil Pressure > 2.5 PSI during period after oil pump starts and before oil solenoid opens	Comp. A1 not allowed to start	Manual	Faulty oil solenoid valve
A039	Alarm	Comp. A2 Failed Oil Solenoid	Diff. Oil Pressure > 2.5 PSI during period after oil pump starts and before oil solenoid opens	Comp. A2 not allowed to start	Manual	Faulty oil solenoid valve
A040	Alarm	Comp. B1 Failed Oil Solenoid	Diff. Oil Pressure > 2.5 PSI during period after oil pump starts and before oil solenoid opens	Comp. B1 not allowed to start	Manual	Faulty oil solenoid valve
A041	Alarm	Comp. B2 Failed Oil Solenoid	Diff. Oil Pressure > 2.5 PSI during period after oil pump starts and before oil solenoid opens	Comp. B2 not allowed to start	Manual	Faulty oil solenoid valve
T051	Alert	Compressor A1 Failure	See CCP description (page 40)	See CCP description	Manual	See page 40
T052	Alert	Compressor A2 Failure	See CCP description (page 40)	See CCP description	Manual	See page 40
T055	Alert	Compressor B1 Failure	See CCP description (page 40)	See CCP description	Manual	See page 40
T056	Alert	Compressor B2 Failure	See CCP description (page 40)	See CCP description	Manual	See page 40
A060	Alarm	Cooler Leaving Fluid Thermistor Failure – 1	Thermistor outside range of –40 to 240° F (–40 to 116° C)	Chiller shut down	Automatic	Thermistor failure, damaged cable/wire or wiring error.
		Cooler Leaving Fluid Thermistor Failure – 2	LWT > EWT + 5° F for 15 minutes	Chiller shut down	Manual	Thermistor failure, damaged cable/wire, wiring error or water piping error.
A061	Alarm	Cooler Entering Fluid Thermistor Failure	Thermistor outside range of –40 to 240° F (–40 to 116° C)	Uses 0.1×F/% Total Capacity as rise/ton	Automatic	Thermistor failure, damaged cable/wire or wiring error.
T062	Alert	Condenser Leaving Fluid Thermistor Failure	Thermistor outside range of –40 to 240° F (–40 to 116° C)	None. Chiller continues to run.	Automatic	Thermistor failure, damaged cable/wire or wiring error.
T063	Alert	Condenser Entering Fluid Thermistor Failure	Thermistor outside range of –40 to 240° F (–40 to 116° C)	None. Chiller continues to run.	Automatic	Thermistor failure, damaged cable/wire or wiring error.
T070	Alert	Cir. A Discharge Gas Thermistor Failure – 1	Thermistor outside range of –40 to 240° F (–40 to 116° C)	Circuit A shut down	Automatic	Thermistor failure, damaged cable/wire, wiring error or motor cooling solenoid failure.
		Cir. A Discharge Gas Thermistor Failure – 2	DGT > 210° F for 30 seconds.	Circuit A shut down	Manual	Thermistor failure, damaged cable/wire, wiring error or motor cooling solenoid failure.

Table 31 — Alarm and Alert Codes (cont)

ALARM/ ALERT CODE	ALARM OR ALERT	DESCRIPTION	WHY WAS THIS ALARM GENERATED?	ACTION TAKEN BY CONTROL	RESET METHOD	PROBABLE CAUSE
T071	Alert	Cir. B Discharge Gas Thermistor Failure – 1	Thermistor outside range of –40 to 240 F (-40 to 116 C)	Circuit B shut down	Automatic	Thermistor failure, damaged cable/wire, wiring error or motor cooling solenoid failure.
		Cir. B Discharge Gas Thermistor Failure – 2	DGT > 210 F for 30 seconds.	Circuit B shut down	Manual	Thermistor failure, damaged cable/wire, wiring error or motor cooling solenoid failure.
T073	Alert	Outside Air Temperature Thermistor Failure	Thermistor outside range of –40 to 240 F (–40 to 116 C)	Reset disabled. Runs under normal control/ set points.	Automatic	Thermistor failure, damaged cable/wire, wiring error or sensor not installed.
T074	Alert	Space Temperature Thermistor Failure	Thermistor outside range of –40 to 240 F (–40 to 116 C)	Reset disabled. Runs under normal control/ set points.	Automatic	Thermistor failure, damaged cable/wire, wiring error or sensor not installed.
T079	Alert	Lead/Lag Leaving Fluid Temperature Thermistor Failure	Thermistor outside range of –40 to 240 F (–40 to 116 C)	Breaks Dual Chiller link if set up for Parallel operation.	Automatic	Thermistor failure, damaged cable/wire, wiring error or sensor not installed.
T090	Alert	Circuit A Discharge Pressure Transducer Failure	Voltage ratio more than 98.9% or less than 6%.	Circuit A shut down	Automatic	Transducer failure, poor connection to MBB, or wiring damage/error.
T091	Alert	Circuit B Discharge Pressure Transducer Failure	Voltage ratio more than 98.9% or less than 6%.	Circuit B shut down	Automatic	Transducer failure, poor connection to MBB, or wiring damage/error.
T092	Alert	Circuit A Suction Pressure Transducer Failure	Voltage ratio more than 99.9% or less than 0.5% for 50 seconds.	Circuit A shut down	Automatic	Transducer failure, poor connection to MBB, or wiring damage/error.
T093	Alert	Circuit B Suction Pressure Transducer Failure	Voltage ratio more than 99.9% or less than 0.5% for 50 seconds.	Circuit B shut down	Automatic	Transducer failure, poor connection to MBB, or wiring damage/error.
T094	Alert	Comp A1 Oil Pressure Transducer Failure	Voltage ratio more than 98.9% or less than 6%.	Comp A1 shut down	Automatic	Transducer failure, poor connection to SCB, or wiring damage/error.
T095	Alert	Comp A2 Oil Pressure Transducer Failure	Voltage ratio more than 98.9% or less than 6%.	Comp A2 shut down	Automatic	Transducer failure, poor connection to SCB, or wiring damage/error.
T096	Alert	Comp B1 Oil Pressure Transducer Failure	Voltage ratio more than 98.9% or less than 6%.	Comp B1 shut down	Automatic	Transducer failure, poor connection to SCB, or wiring damage/error.
T097	Alert	Comp B2 Oil Pressure Transducer Failure	Voltage ratio more than 98.9% or less than 6%.	Comp B2 shut down	Automatic	Transducer failure, poor connection to SCB, or wiring damage/error.
T098	Alert	Circuit A Economizer Pressure Transducer Failure – 1	Voltage ratio more than 99.9% or less than 0.5% for 50 seconds.	Circuit A shut down	Automatic	Transducer failure, poor connection to SCB, or wiring damage/error.
	Alert	Circuit A Economizer Pressure Transducer Failure – 2	Economizer pressure is more than 12 psi (83 kPa) less than suction pressure.	Circuit A shut down	Manual	Suction and Economizer pressure connectors/wiring are swapped.
T099	Alert	Circuit B Economizer Pressure Transducer Failure – 1	Voltage ratio more than 99.9% or less than 0.5% for 50 seconds.	Circuit B shut down	Automatic	Transducer failure, poor connection to SCB, or wiring damage/error.
	Alert	Circuit B Economizer Pressure Transducer Failure – 2	Economizer pressure is more than 12 psi (83 kPa) less than suction pressure.	Circuit B shut down	Manual	Suction and Economizer pressure connectors/wiring are swapped.
T110	Alert	Circuit A Loss of Charge	Discharge pressure reading < 10 psig for 30 seconds.	Circuit A shut down	Manual	Refrigerant leak or transducer failure.
T111	Alert	Circuit B Loss of Charge	Discharge pressure reading < 10 psig for 30 seconds.	Circuit B shut down	Manual	Refrigerant leak or transducer failure.

Table 31 — Alarm and Alert Codes (cont)

ALARM/ ALERT CODE	ALARM OR ALERT	DESCRIPTION	WHY WAS THIS ALARM GENERATED?	ACTION TAKEN BY CONTROL	RESET METHOD	PROBABLE CAUSE
T120	Alert	Circuit A Low Saturated Suction Temperature	SST reads 6° F (3.3° C) or more below the brine freeze point for 3 minutes or 28° F below brine freeze point for 2 minutes.	Circuit A shut down	Manual††	Low refrigerant charge, plugged strainer, faulty expansion valve, or low water flow.
T121	Alert	Circuit B Low Saturated Suction Temperature	SST reads 6° F (3.3° C) or more below the brine freeze point for 3 minutes or 28° F below brine freeze point for 2 minutes.	Circuit B shut down	Manual††	Low refrigerant charge, plugged strainer, faulty expansion valve, or low water flow.
T122	Alert	Circuit A High Saturated Suction Temperature	After first 90 seconds, SST > 55 F (12.8 C) and EXV < 1% for 5 minutes.	Circuit A shut down	Manual	Faulty expansion valve, liquid level sensor or transducer.
T123	Alert	Circuit B High Saturated Suction Temperature	After first 90 seconds, SST > 55 F (12.8 C) and EXV < 1% for 5 minutes.	Circuit B shut down	Manual	Faulty expansion valve, liquid level sensor or transducer.
T124	Alert	Circuit A Low Oil Level/Flow	Level switch input open.	Circuit A shut down after 4th failure in 18 hours.	Manual	Low oil level, failed switch, wiring error, failed control module.
T125	Alert	Circuit B Low Oil Level/Flow	Level switch input open.	Circuit B shut down after 4th failure in 18 hours.	Manual	Low oil level, failed switch, wiring error, failed control module.
T126	Alert	Circuit A High Discharge Pressure	SCT > MCT_SP + 5° F (2.8° C)	Circuit A shut down.	Automatic†	Faulty transducer/high pressure switch, low/restricted condenser air/water flow**
T127	Alert	Circuit B High Discharge Pressure	SCT > MCT_SP + 5° F 2.8° C)	Circuit B shut down.	Automatic†	Faulty transducer/high pressure switch, low/restricted condenser air/water flow**
A128	Alarm	Circuit A Condenser Freeze Protection (alarm ignored for brine chillers)	For water cooled chillers only, if SCT < 34 F (1.1° C)	Chiller shut down. Turns condenser pump On if Chiller is Off.	Automatic	Failed/bad discharge pressure transducer, refrigerant leak, configured for water-cooled condenser.
A129	Alarm	Circuit B Condenser Freeze Protection (alarm ignored for brine chillers)	For water cooled chillers only, if SCT < 34 F (1.1° C)	Chiller shut down. Turns condenser pump On if Chiller is Off.	Automatic	Failed/bad discharge pressure transducer, refrigerant leak, configured for water-cooled condenser.
T131	Alert	Circuit A Liquid Level Sensor Failure	Sensor outside range of –40 to 240 F (–40 to 116 C) when SST > 9 F (–12.8 C)	Runs, but controls EXV based on Disch. Superheat.	Automatic	Thermistor circuit open, faulty liquid level sensor, wiring error.
T132	Alert	Circuit B Liquid Level Sensor Failure	Sensor outside range of –40 to 240 F (–40 to 116 C) when SST > 9 F (–12.8 C)	Runs, but controls EXV based on Disch. Superheat.	Automatic	Thermistor circuit open, faulty liquid level sensor, wiring error.
T135	Alert	Circuit A Failure to Pump Out	With EXV closed, SST did not drop 10° F (5.6° C) in 6 minutes, or SST is not 6° F (3.3° C) less than Brine Freeze, or SST is not less than 10 F (–12 C).	None	Manual	Faulty transducer, EXV, or Economizer.
T136	Alert	Circuit B Failure to Pump Out	With EXV closed, SST did not drop 10° F (5.6° C) in 6 minutes, or SST is not 6° F (3.3° C) less than Brine Freeze, or SST is not less than 10 F (–12 C).	None	Manual	Faulty transducer, EXV, or Economizer.
T137	Alert	Circuit A Low Discharge Superheat	Superheat < 5° F (2.8° C) for 10 minutes.	Circuit A shut down	Manual	Faulty thermistor, transducer, EXV, or Economizer. Motor cooling solenoid stuck open.
T138	Alert	Circuit B Low Discharge Superheat	Superheat < 5° F (2.8° C) for 10 minutes.	Circuit B shut down	Manual	Faulty thermistor, transducer, EXV, or Economizer. Motor cooling solenoid stuck open.
T140	Alert	Compressor A1 – High Oil Filter Pressure Drop	Oil filter pressure drop (FD.A1) exceeds 25 psig 172 kPa) for water-cooled units or 30 psig (207 kPa) for air-cooled and split system units.	None	Manual	Filter change needed to prevent machine from shutting down.
T141	Alert	Compressor A2 – High Oil Filter Pressure Drop	Oil filter pressure drop (FD.A2) exceeds 25 psig (172 kPa) for water-cooled units or 30 psig (207 kPa) for air-cooled and split system units.	None	Manual	Filter change needed to prevent machine from shutting down.

Table 31 — Alarm and Alert Codes (cont)

ALARM/ALERT CODE	ALARM OR ALERT	DESCRIPTION	WHY WAS THIS ALARM GENERATED?	ACTION TAKEN BY CONTROL	RESET METHOD	PROBABLE CAUSE
T142	Alert	Compressor B1 – High Oil Filter Pressure Drop	Oil filter pressure drop (FD.B1) exceeds 25 psig (172 kPa) for water-cooled units or 30 psig (207 kPa) for air-cooled and split system units.	None	Manual	Filter change needed to prevent machine from shutting down.
T143	Alert	Compressor B2 – High Oil Filter Pressure Drop	Oil filter pressure drop (FD.B2) exceeds 25 psig (172 kPa) for water-cooled units or 30 psig (207 kPa) for air-cooled and split system units.	None	Manual	Filter change needed to prevent machine from shutting down.
A150	Alarm	Unit is in Emergency Stop	CCN command received to shut unit down	Chiller shut down	CCN/ Automatic	Network command
A151	Alarm	Illegal Configuration-x	Illegal Configuration has been entered. Correction needed.	Chiller cannot start.	Manual	Configuration error. See Table 32.
A152	Alarm	Circuit A&B Off for Alerts. Unit down.	Control has shut down both circuits due to alerts.	None	Automatic	Check individual alarms.
T153	Alert	Real Time Clock Hardware Failure	Time not advancing on board,	Defaults to occupied	Automatic	Time clock not initialized or board fail
A154	Alarm	Serial EEPROM Hardware Failure	Internal failure of the EEPROM.	Machine shuts down	Manual	Replace Main Base Board.
A155	Alarm	Serial EEPROM Storage Failure Error	Internal diagnostic has found an error on critical data.	Machine shuts down	Manual	Re-download the software of consider replacement of the Main Base Board.
A156	Alarm	Critical Serial EEPROM Storage Failure Error	Internal diagnostic has found an error on critical data.	Machine shuts down	Manual	Replace Main Base Board.
A157	Alarm	A/D Hardware Failure	A/D converter on the MBB has failed.	Machine shuts down	Manual	Replace Main Base Board.
A159	Alarm	Loss of Condenser Flow	Flow switch not closed within 1 minute after pump is started or if flow switch opens during normal operation for > 10 sec.	Chiller shut down.	Manual	Low condenser water flow, failed condenser pump.
A172	Alarm	Loss of Communication with EXV Module	MBB has lost communication with the EXV Module	Chiller shut down.	Automatic	Failed EXV Module, wiring error, loose connections, failed transformer, wrong address.
T173	Alert	Loss of Communication with Energy Management Module	MBB has lost communication with the Energy Management Module when this option is installed.	EMM options are disabled.	Automatic	Failed EMM, wiring error, loose connections, failed transformer, wrong address, wrong configuration.
T174	Alert	4-20 mA Cool Setpoint Input Failure	If configured and input signal to EMM less than 2 mA or greater than 22 mA.	Function disabled. Normal set point used.	Automatic	Faulty signal generator, wiring error, loss of signal
T175	Alert	4-20 mA Heat Setpoint Input Failure	If configured and input signal to EMM less than 2 mA or greater than 22 mA.	Function disabled. Normal set point used.	Automatic	Faulty signal generator, wiring error, loss of signal
T176	Alert	4-20 mA Reset Input Out of Range	If configured and input signal to EMM less than 2 mA or greater than 22 mA.	Reset function disabled. Normal set point used.	Automatic	Faulty signal generator, wiring error loss of signal
T177	Alert	4-20 mA Demand Limit Input Out of Range	If configured and input signal to EMM less than 2 mA or greater than 22 mA.	Reset function disabled. Normal set point used.	Automatic	Faulty signal generator, wiring error, loss of signal
A178	Alarm	Loss of Communication with Screw Chiller Module	MBB has lost communication with the Screw Chiller Module	Chiller shut down.	Automatic	Failed SCB Module, wiring error, loose connections, failed transformer, wrong address.
A180	Alarm	Loss of Communication with Compressor Protection Module 1	MBB has lost communication with the Compressor Protection Module 1	Chiller shut down.	Automatic	Failed CCP Module, wiring error, loose connections, failed transformer, wrong address.
A181	Alarm	Loss of Communication with Compressor Protection Module 2	MBB has lost communication with the Compressor Protection Module 2	Chiller shut down.	Automatic	Failed CCP Module, wiring error, loose connections, failed transformer, wrong address.

Table 31 — Alarm and Alert Codes (cont)

ALARM/ALERT CODE	ALARM OR ALERT	DESCRIPTION	WHY WAS THIS ALARM GENERATED?	ACTION TAKEN BY CONTROL	RESET METHOD	PROBABLE CAUSE
T182	Alert	Compressor Protection Module 1 Internal Diagnostic	The *Comfort*Link™ Compressor Protection Module has generated an internal diagnostic alert.	Affected compressors are shut down.	Manual on CCP and MBB	Eliminate EMI sources around the module, consider replacement of the CCP module if alerts continue.
T183	Alert	Compressor Protection Module 2 Internal Diagnostic	The *Comfort*Link Compressor Protection Module has generated an internal diagnostic alert.	Affected compressors are shut down.	Manual on CCP and MBB	Eliminate EMI sources around the module, consider replacement of the CCP module if alerts continue.
T184	Alarm	Compressor Protection Module 1	CCP has experienced too many power cycles‖	Chiller shut down	Manual	Loose connections, frequent power interruptions.
T185	Alarm	Compressor Protection Module 2	CCP has experienced too many power cycles‖	Chiller shut down	Manual	Loose connections, frequent power interruptions.
A200	Alarm	Cooler Pump Interlock Failed at Start-Up	Interlock did not close within 5 minutes after chiller was enabled	Chiller shut down. Pump turned off.	Manual	Failure of cooler pump, cooler pump interlock, or flow switch
A201	Alarm`	Cooler Pump Interlock Opened Unexpectedly	Interlock opened for at least 10 seconds during operation	Chiller shut down. Pump turned off.	Manual	Failure of cooler pump, cooler pump interlock, or flow switch
A202	Alarm	Cooler Pump Interlock Closed When Pump OFF	Interlock closed when pump relay is off	Cooler pump remains off. Unit prevented from starting.	Manual	Failure of cooler pump relay or interlock, welded contacts. Cooler pump enabled but mot controlling pump
T203	Alert	Loss of Communication with the Slave Chiller	The master chiller (when configured) has lost communication with the slave chiller for 3 minutes.	Master chiller runs as a stand-alone chiller.	Automatic	Failed Slave MBB Module, wiring error, loose connections, wrong address, loss of control power on slave chiller.
T204	Alert	Loss of Communication with the Master Chiller	The slave chiller (when configured) has lost communication with the master chiller for 3 minutes.	Slave chiller runs as a stand-alone chiller.	Automatic	Failed Master MBB Module, wiring error, loose connections, wrong address, loss of control power on master chiller.
T205	Alert	Master and Slave Chiller with Same Address	The master chiller (when configured) has determined that its address is the same as the slave address.	Dual chiller control disabled.	Automatic	Master and Slave chiller must have different addresses.
T206	Alert	High Leaving Chilled Water Temperature	LCW read > LCW Delta Alarm limit and total capacity is 100% and current LCW > LCW reading 1 minute ago	None.	Automatic	Building load greater than unit capacity, low water/brine flow, or compressor fault. Check for other alarms or alerts.
A207	Alarm	Cooler Freeze Protection	Cooler EWT or LWT less than freeze point. Freeze point is the brine freeze setpoint +2 F (1.1 C).	Chiller shut down. Leave Cooler pump on. Turn Cooler pump on if Chiller is off.	Automatic†	Faulty thermistor, low water flow
T210	Alert	Winterization Required	SCT<32 F in either circuit	None	Manual	Winterization must be performed to avoid cooler freeze-up. After winterization has been completed, configure W.DNE (winterization performed) to YES to reset alert.
T950	Alert	Loss of Communication with WSM	No communications have been received by the MBB within 5 minutes of transmission.	WSM forces removed. Runs under own control.	Automatic	Failed module, wiring error, failed transformer, loose connection plug, wrong address
A951	Alarm	Loss of Communication with Chillervisor System Manager (CSM)	No communications have been received by the MBB within 5 minutes of last transmission.	CSM forces removed. Runs under own control.	Automatic	Wiring faulty or module failure
T998	Alert	Loss of Refrigerant Flow in Circuit A.	Between 40 and 90 seconds of runtime, SST is less than 0° F (–18 C) and the rate of change is negative (in 5 second increments).	Circuit A compressor is shut down.	Manual	Refrigerant restriction such as closed suction service valve, closed liquid line service valve, faulty liquid line solenoid valve, faulty EXV/Economizer operation, plugged refrigerant strainer, closed discharge line valve.
T999	Alert	Loss of Refrigerant Flow in Circuit B.	Between 40 and 90 seconds of runtime, if SST is less than 0° F (–18 C) and the rate of change is negative (in 5 second increments).	Circuit B compressor is shut down.	Manual	Refrigerant restriction such as closed suction service valve, closed liquid line service valve, faulty liquid line solenoid valve, faulty EXV/Economizer operation, plugged refrigerant strainer, closed discharge line valve.

Legend and Notes for Table 31

LEGEND

A/D — Analog to Digital Converter
CCN — Carrier Comfort Network
CCP — *Comfort*Link™ Compressor Protection
DGT — Discharge Gas Temperature
EMI — Electromagnetic Interference
EMM — Energy Management Module
EWT — Entering Water Temperature
EXV — Electronic Expansion Valve
HPS — High-Pressure Switch
LCW — Leaving Chilled Water
LWT — Leaving Water Temperature
MBB — Main Base Board
MCT_SP — Maximum Condensing Temperature Set Point
MTA — Compressor Must Trip Amps
SCB — Screw Compressor Board
SCT — Saturated Condensing Temperature
SST — Saturated Suction Temperature
WSM — Water-System Manager

*Compressors are equipped with 2 motor winding temperature thermistors. Verify first that the problem is not a wiring error before using backup thermistor.
†Reset automatic first time, manual if repeated on the same date.
**Note that the high-pressure switch should trip before this alert is generated. Check HPS operation if this alert is generated.
††Manual reset after 1 hour from occurrence.
||Maximum 5 power losses at CCP in one hour.

NOTES:

1. Low Oil Pressure Alert Criteria and Set Points
   Where: P_d = Discharge Pressure, P_s = Suction Pressure.
   P_o = Oil Pressure and P_e = Economizer Pressure
   Two oil pressure set points are used. Oil Set Point 1 is always 15 psig.
   a. If $(P_d - P_s) < 125$, then Oil Set Point 2 = $0.235 \times (P_d - P_s) + 0.588$
   b. If $(P_d - P_s) > 125$ and < 165, then Oil Set Point 2 = $2.0 \times (P_d - P_s) - 220.0$
   c. If $(P_d - P_s) \geq 165$ then Oil Set Point 2 = $0.6364 \times (P_d - P_s) + 5.0$
   The 2 set points are used by the control for the Low Oil Pressure alert trip Criteria below:
   a. If $P_s < 35$, then Oil Set Point 1 = 10 psig.
   b. If $P_s > 35$ and < 51, then Oil Set Point 1 = 12.5 psig.
   c. If $P_s \geq 51$, then Oil Set Point 1 = 15 psig.
   d. Oil Set Point 2 is determined by $(P_d - P_s)$ and is shown in the chart below.
2. $(P_o - P_e)$ is the Oil pressure differential displayed as items DO.A1 and DO.A2 (Pressures mode under sub-mode PRC.A) for Circuit A and DO.B1 and DO.B2 (Pressures mode under sub-mode PRC.B) for Circuit B.

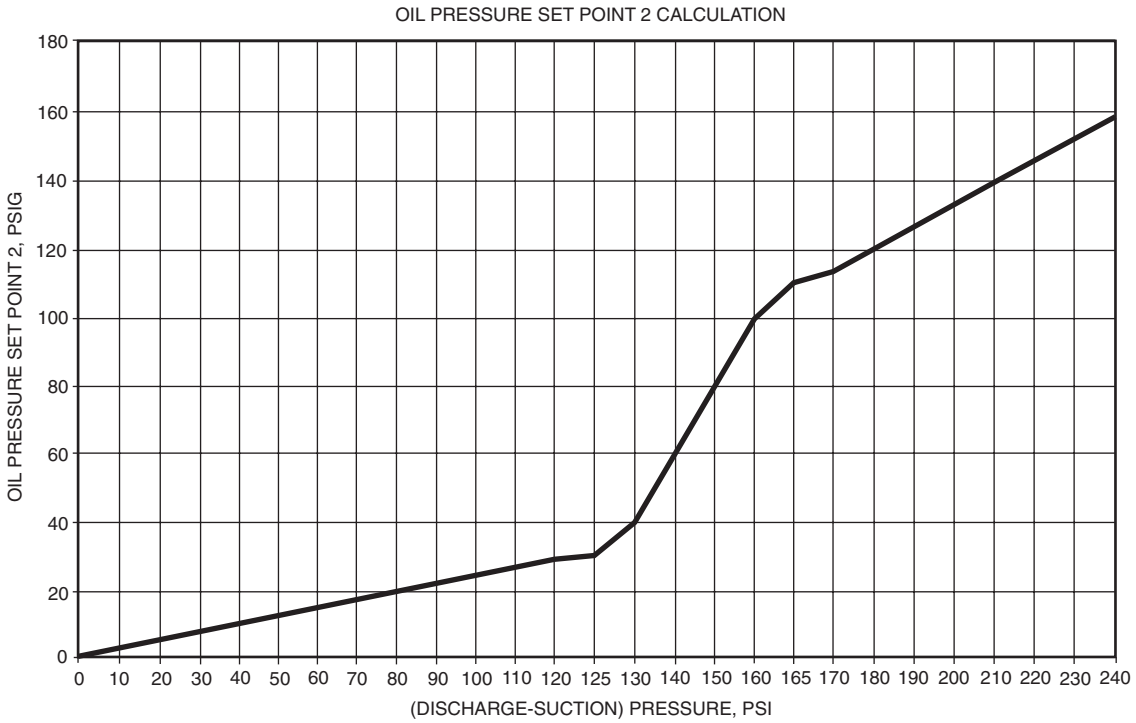

Table 32 — Illegal Configurations (Alarm 151)

CODE NUMBER	ILLEGAL CONFIGURATION DESCRIPTION
1	Unit type outside range of 1-5
2	Number of compressors in Circuit A outside range of 1-2
3	Number of compressors in Circuit B outside range of 1-2
4	Invalid FAN.S or HPCT Selection
5	Air-cooled chiller with Low Temperature Brine fluid (FLUD = Low Brine)
6	Water-cooled chiller configured for air-cooled head pressure control type (HPCT)
7	Air-cooled chiller with condenser pump control enabled
8	Air-cooled chiller with condenser fluid sensors enabled

EXV Troubleshooting Procedure — Follow steps below to diagnose and correct EXV/Economizer problems.

On 30HX units with economizers, verify that the valve for the bubbler tube (bottom of economizer) is open. Check EXV motor operation first. Switch the Enable/Off/Remote Contact switch to the Off position. Press ESCAPE on the Navigator until 'Select a menu item' appears on the display. Use the arrow keys to select the Service Test mode. Press ENTER. The display will be:

```
> TEST        OFF
  OUTS
  COMP
```

Press ENTER (password entry may be required) and use ▲ to change 'OFF' to 'ON'. Switch the EOR switch to Enable. The Service Test mode is now enabled. Move the pointer down to the OUTS sub-mode and press ENTER. Move the pointer to item EXV.A or EXV.B as needed. Press ENTER and the valve position will flash. Use ▲ to select 100% valve position (hold ▲ for quick movement) and press ENTER.

You should be able to feel the actuator moving by placing your hand on the EXV or economizer body (the actuator is located about one-half to two-thirds of the way up from the bottom of the economizer shell). A hard knocking should be felt from the actuator when it reaches the top of its stroke (can be heard if surroundings are relatively quiet). Press ENTER again twice if necessary to confirm this. To close the valve, press ENTER, select 0% with ▼ and press ENTER. The actuator should knock when it reaches the bottom of its stroke. If it is believed that the valve is not working properly, continue with the check-out procedure below:

Check the EXV output signals at appropriate terminals on the EXV module (see Fig. 15). Connect positive test lead to red wire (EXV-J6 terminal 3 for Circuit A, EXV-J7 terminal 3 for Circuit B). Set meter to approximately 20 vdc. Using the Service Test procedure above, move the valve output under test to 100%. During the next several seconds, connect the negative test lead to pins 1,2,4 and 5 in succession (plug J6 for Circuit A, plug J7 for Circuit B). Voltage should rise and fall at each pin. If it remains constant at a voltage or shows 0 volts, remove the connector to the valve and recheck.

Press ENTER and select 0% to close the valve. Check the 4 position DIP switch on the board (all switches should be set to On). If a problem still exists, replace the EXV module. If the reading is correct, the expansion valve and EXV wiring should be checked. Check the EXV terminal strip and interconnecting wiring.

1. Check color coding and wire connections. Make sure they are connected to the correct terminals at the EXV driver and EXV plug and that the cables are not crossed.
2. Check for continuity and tight connection at all pin terminals.

Check the resistance of the EXV motor windings. Remove the EXV module plug (J6 for Circuit A, J7 for Circuit B) and check the resistance between the common lead (red wire, terminal D) and remaining leads, A,B,C and E (see Fig. 15). The resistance should be 25 ohms ± 2 ohms.

INSPECTING/OPENING ELECTRONIC EXPANSION VALVES

> IMPORTANT: Obtain replacement O-ring before opening EXV. Do not reuse O-rings.

To check the physical operation of an EXV, the following steps must be performed.

1. Close the liquid line service valve of the circuit to be checked. Put the Enable/Off/Remote Contact switch in the Off position. Using the Navigator, enter the Service Test mode and change the sub-mode TEST from 'OFF' to 'ON'. Switch the EOR switch to the Enable position. Under the COMP sub-mode, enable the desired compressor (CC.xx) for the circuit. Let compressor run until gage on suction pressure port reads 10 psig. Press ENTER, ▼ and ENTER to turn the compressor off. The compressor will complete its pumpout routine and turn off. Immediately after the compressor shuts off, close the discharge valve.
2. Remove any remaining refrigerant from the system low side using proper reclaiming techniques. Drain oil from cooler using Schrader port in cooler inlet line. Turn off the line voltage power supply to the compressors and control circuit power.
3. The expansion valve motor is hermetically sealed inside the top portion of the valve. Carefully unscrew the large retaining nut securing the motor portion to the body of the valve making sure the EXV plug is still connected. The EXV lead screw and sleeve will come off with the motor portion of the device.
4. Enter the appropriate EXV test step under the OUTS sub-mode in the Service Test mode. Locate the desired item 'EXV.A' or 'EXV.B'. Press ENTER to make the valve position of 0% flash. Press and hold ▲ until 100% is displayed and press ENTER. Observe the operation of the lead screw and sleeve. The motor should be turning the lead screw and sleeve counterclockwise, raising the sleeve closer to the motor. Lead screw movement should be smooth and uniform from fully closed to fully open position. Press ENTER, use ▼ to select 0% and press ENTER again to check open to closed operation. If the valve is properly connected to the processor and receiving correct signals, yet does not operate as described above, the sealed motor portion of the valve should be replaced.

INSPECTING/OPENING ECONOMIZERS — To check the physical operation of an economizer (see Fig. 16), the following steps must be performed:

1. Close the liquid line service valve of the circuit to be checked. Put the Enable/Off/Remote Contact switch in the Off position. Using the Navigator, enter the Service

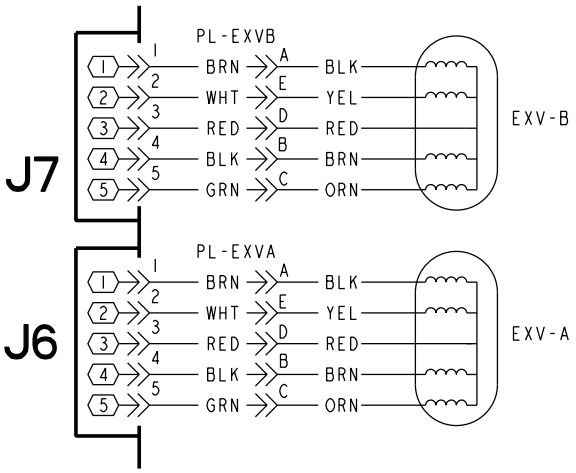

Fig. 15 — EXV Cable Connections to EXV Module

Test mode and change the sub-mode TEST from 'OFF' to 'ON'. Switch the ENABLE/OFF/REMOTE CONTACT switch to the Enable position. Under the COMP sub-mode, enable the desired compressor (CC.xx) for the circuit. Let compressor run until gage on suction pressure port reads 10 psig. Press ENTER, the down arrow key and ENTER to turn the compressor off. The compressor will complete its pumpout routine and turn off. Immediately after the compressor shuts off, close the discharge valve and the bubbler valve on 30HX units (located in elbow fitting on condenser shell). For 30GX units, there is no shutoff valve in the bubbler tube line.

2. Remove any remaining refrigerant from the system low side and discharge piping using proper reclaiming techniques. Drain oil from cooler using Schrader port in cooler inlet line. Turn off the line voltage power supply to the compressors and control circuit power.
3. Remove the shell retaining bolts on the bottom of the economizer and the bolts that secure the shell to the unit frame or mounting bracket. Cut the motor cooling line leaving the top of the economizer. Carefully remove the shell from the economizer. Make sure EXV plug is still connected. The economizer shell is heavy. Use caution when removing shell.

> IMPORTANT: When removing shell from economizer, it must be lifted off as close to vertical as possible to prevent damage to any of the internal parts. Use a catch pan beneath the economizer as oil will come out when the shell is removed. Be careful to avoid damage to motor leads. Do not reuse compressor oil.

4. Enter the appropriate EXV test step under the OUTS sub-mode in the Service Test mode. Locate the desired item 'EXV.A' or 'EXV.B'. Press ENTER to make the valve position of 0% flash. Press and hold ▲ until 100% is displayed and press ENTER. Observe the operation of the valve motor should turn counterclockwise, and the lead screw should move up out of the motor hub until the valve is fully open. Lead screw movement should be smooth and uniform from fully closed to fully open position. Press ENTER, use ▼ to select 0% and press ENTER again to check open to closed operation. If the valve is properly connected to the processor and receiving correct signals, yet does not operate as described above, the economizer should be replaced.
5. Additional items to check for:
   a. Verify that float assembly (see cross section view in Fig. 16 moves up and down freely. It should take only a minimal force (less than one pound) to move the float and there should be no binding.
   b. Check the bubbler tube (found by carefully lifting the float) for crimps, etc. and verify that the end of the tube is open.
6. Reassemble economizer; retorque shell retaining bolts to 35 ft-lb (48 N-m).

If operating problems persist after reassembly, they may be due to a bad liquid level sensor, suction pressure transducer or intermittent connections between the processor board terminals and EXV plug. Recheck all wiring connections and voltage signals.

Other possible causes of improper refrigerant flow control could be restrictions in the liquid line. Check for plugged strainer(s) or restricted metering slots in the EXV (see Fig. 17) or economizer. Formation of ice or frost on lower body of electronic expansion valve is one symptom of restricted metering slots. However, frost or ice formation is normally expected when leaving fluid temperature from the cooler is below 40 F (4.4 C). Clean or replace valve if necessary.

NOTE (non-economizer units only): Frosting of valve is normal during compressor test steps and at initial start-up. Frost should dissipate after 5 to 10 minutes operation in a system that is operating properly. If valve is to be replaced, wrap valve with a wet cloth to prevent excessive heat from damaging internal components.

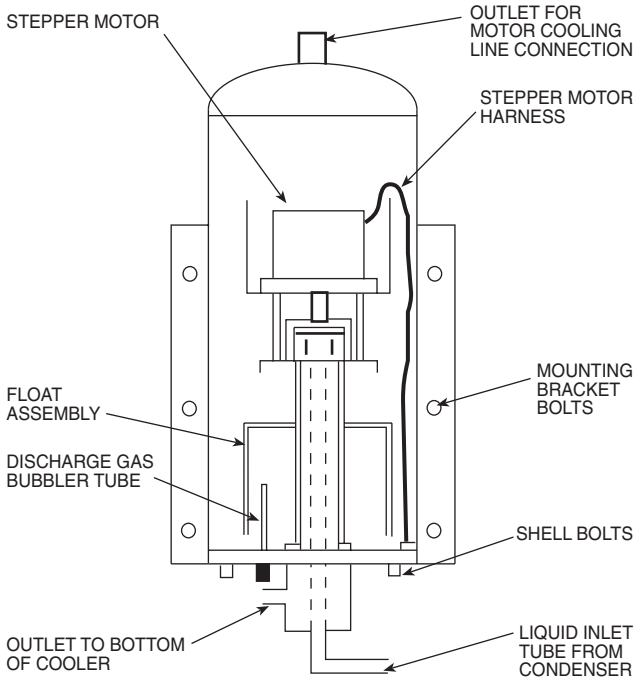

Fig. 16 — 30GX,HX Cutaway View of Economizer Assembly

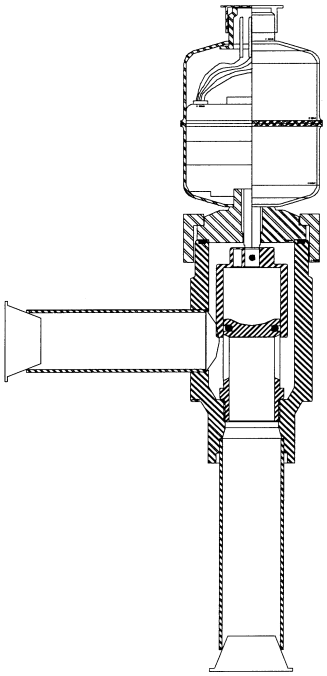

Fig. 17 — Typical 30GXN,GXR,HX EXV

SERVICE

Servicing Coolers and Condensers — When cooler heads and partition plates are removed, tube sheets are exposed showing the ends of tubes. The 30GXN,GXR,HX units use a flooded cooler design. Water flows inside the tubes.

TUBE PLUGGING — A leaky tube in one circuit can be plugged until retubing can be done. The number of tubes plugged determines how soon the cooler must be retubed. All tubes in the 30GXN,R and 30HX coolers and 30HX condensers can be removed. Loss of unit capacity and efficiency as well as increased pump power will result from plugging tubes. Failed tubes should be replaced as soon as possible. Up to 10% of the total number of tubes can be plugged before retubing is necessary. Figure 18 shows an Elliott tube plug and a cross-sectional view of a plug in place. The same components for plugging and rolling tubes can be used for all coolers and 30HXC condensers. See Table 33. If tube failure is in both circuits, using tube plugs will not correct problem. Contact your Carrier representative for assistance.

⚠ CAUTION

Use extreme care when installing plugs to prevent damage to the tube sheet section between the holes.

RETUBING (See Table 34) — When retubing is to be done, obtain service of qualified personnel experienced in boiler maintenance and repair. Most standard procedures can be followed when retubing the 30GXN,R and 30HX heat exchangers. Care must be taken as the tubes are rolled in the center tube sheet and require special pulling tools. A 7% crush is recommended when rolling replacement tubes into the tubesheet. A 7% crush can be achieved by setting the torque on the gun at 48 to 50 in.-lb (5.4 to 5.6 N-m).

The following Elliott Co. tube rolling tools are required:

113123 Expander Assembly	213123 Mandrel
2134123 Cage	2115122 Rolls

Place one drop of Loctite No. 675 or equivalent on top of tube prior to rolling. This material is intended to "wick" into the area of the tube that is not rolled into the tube sheet, and prevent fluid from accumulating between the tube and the tube sheet. New tubes must also be rolled into the center tube sheet to prevent circuit-to-circuit refrigerant leakage.

Table 33 — Plugging Components

COMPONENTS FOR PLUGGING	PART NUMBER
For Tubes	
Brass Pin	853103-1*
Brass Ring	853002-640* or -657†
For Holes without Tubes	
Brass Pin	853103-1A*
Brass Ring	853002-738*
Roller Extension	S82-112/11
Loctite	No. 675**
Locquic	"N"**

*Order directly from: Elliott Tube Company, Dayton, Ohio.
†Measure tube ID before ordering.
**Can be obtained locally.

Table 34 — Tube Diameters

ITEM	INCHES	MILLIMETERS
Tube sheet hole diameter:	0.756	19.20
Tube OD	0.750	19.05
Tube ID after rolling:	0.650	16.51
(includes expansion	to	to
due to clearance)	0.667	16.94

NOTE: Tubes replaced along heat exchanger head partitions must be flush with tube sheet.

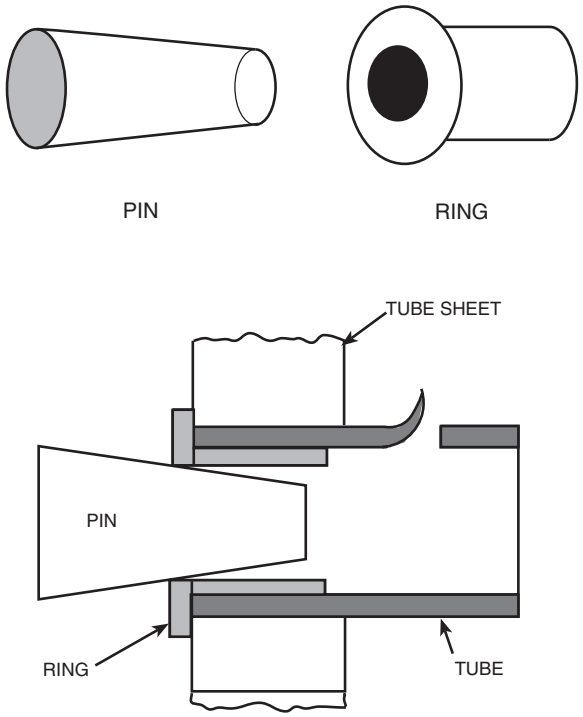

PIN AND RING INSTALLED

Fig. 18 — Tube Plugging

TIGHTENING COOLER/CONDENSER HEAD BOLTS

O-Ring Preparation — When reassembling cooler and condenser heads, always check the condition of the O-ring(s) first. The O-ring should be replaced if there are any visible signs of deterioration, cuts or damage. Apply a thin film of grease to the O-ring before installation. This will aid in holding the O-ring into the groove while the head is installed. Torque all bolts to the following specification and in the sequence shown in Fig. 19.

$^3/_4$-in. Diameter Perimeter and Plate Bolts . . . . . 200 to 225 ft-lb (271 to 305 N-m)

1. Install all bolts finger tight.
2. Follow numbered sequence shown for head type being installed. This will apply even pressure to the O-ring.
3. Apply torque in one-third steps until required torque is reached. Load all bolts to each one-third step before proceeding to the next one-third step.
4. No less than one hour later, retighten all bolts to required torque values.
5. Restore water/brine flow and check for leaks. Fix leaks as necessary. Replace insulation (on cooler heads only).

Inspecting/Cleaning Heat Exchangers

COOLERS — Inspect and clean the cooler tubes at the end of the first operating season. Because these tubes have internal ridges, a rotary-type tube cleaning system is necessary to fully clean the tubes. Tube condition in the cooler will determine the scheduled frequency for cleaning, and will indicate whether water treatment is adequate in the chilled water/brine circuit. Inspect the entering and leaving thermistors for signs of corrosion or scale. Replace the sensor if corroded or remove any scale if found.

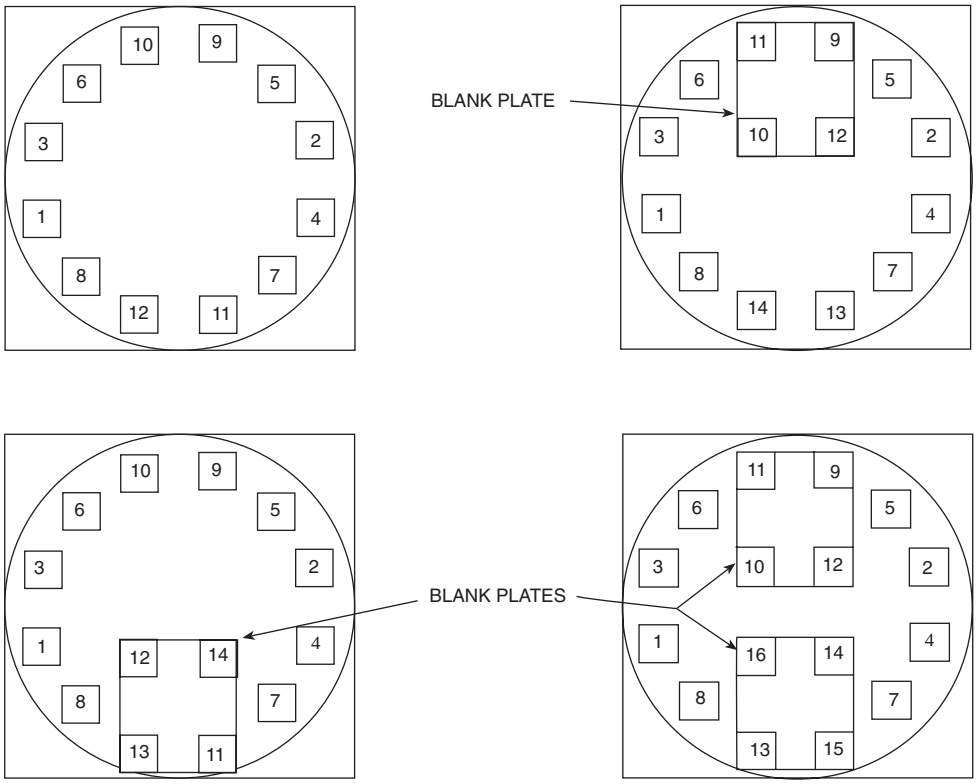

Fig. 19 — Cooler and Condenser Head Recommended Bolt Torque Sequence

CONDENSERS (30HX Only) — Since this water circuit is usually an open-type system, the tubes may be subject to contamination and scale. Clean the condenser tubes with a rotary tube cleaning system at regular intervals, and more often if the water is contaminated. Inspect the entering and leaving condenser water thermistors (if installed) for signs of corrosion or scale. Replace the sensor if corroded or remove any scale if found.

Higher than normal condenser pressures, together with inability to reach full refrigeration load, usually indicate dirty tubes or air in the machine. If the refrigeration log indicates a rise above normal condenser pressures, check the condenser refrigerant temperature against the leaving condenser water temperature. If this reading is more than what the design difference is supposed to be, then the condenser tubes may be dirty, or water flow may be incorrect. Due to the pressure in the R-134a system, air usually will not enter the machine; the refrigerant will leak out.

During the tube cleaning process, use brushes specially designed to avoid scraping and scratching the tube wall. Contact your Carrier representative to obtain these brushes. Do not use wire brushes.

⚠ CAUTION

Hard scale may require chemical treatment for its prevention or removal. Consult a water treatment specialist for proper treatment procedures.

Water Treatment — Untreated or improperly treated water may result in corrosion, scaling, erosion, or algae. The services of a qualified water treatment specialist should be obtained to develop and monitor a treatment program.

⚠ CAUTION

Water must be within design flow limits, clean and treated to ensure proper machine performance and reduce the potential of tubing damage due to corrosion, scaling, erosion, and algae. Carrier assumes no responsibility for chiller or condenser damage resulting from untreated or improperly treated water.

Condenser Coils

COIL CLEANING — For standard aluminum, copper and pre-coated aluminum fin coils, clean the coils with a vacuum cleaner, fresh water, compressed air, or a bristle brush (not wire). Units installed in corrosive environments should have coil cleaning as part of a planned maintenance schedule. In this type of application, all accumulations of dirt should be cleaned off the coil.

⚠ CAUTION

Do not use high-pressure water or air to clean coils — fin damage may result.

CLEANING E-COATED COILS — Follow the outlined procedure below for proper care, cleaning and maintenance of E-coated aluminum or copper fin coils:

Coil Maintenance and Cleaning Recommendations — Routine cleaning of coil surfaces is essential to maintain proper operation of the unit. Elimination of contamination and removal of harmful residues will greatly increase the life of the coil and extend the life of the unit.

Remove Surface Loaded Fibers — Surface loaded fibers or dirt should be removed with a vacuum cleaner. If a vacuum cleaner is not available, a soft brush may be used. In either case, the tool should be applied in the direction of the fins. Coil surfaces can be easily damaged (fin edges bent over) if the tool is applied across the fins.

NOTE: Use of a water stream, such as a garden hose, against a surface loaded coil will drive the fibers and dirt into the coil. This will make cleaning efforts more difficult. Surface loaded fibers must be completely removed prior to using low velocity clean water rinse.

Periodic Clean Water Rinse — A periodic clean water rinse is very beneficial for coils that are applied in coastal or industrial environments. However, it is very important that the water rinse is made with very low velocity water stream to avoid damaging the fin edges. Monthly cleaning as described below is recommended.

Routine Cleaning of Coil Surfaces — Monthly cleaning with Environmentally Sound Coil Cleaner is essential to extend the life of coils. It is recommended that all coils, including standard aluminum, pre-coated, copper/copper or E-coated coils are cleaned with the Environmentally Sound Coil Cleaner as described below. Coil cleaning should be part of the units regularly scheduled maintenance procedures to ensure long life of the coil. Failure to clean the coils may result in reduced durability in the environment.

Environmentally Sound Coil Cleaner is non-flammable, hypoallergenic, non-bacterial, USDA accepted biodegradable and 100% ecologically safe agent that will not harm the coil or surrounding components such as electrical wiring, painted metal surfaces or insulation. Use of non-recommended coil cleaners is strongly discouraged since coil and unit durability could be affected.

Environmentally Sound Coil Cleaner Application Equipment

- $2^1/_2$ Gallon Garden Sprayer
- Water Rinse with Low Velocity Spray Nozzle

Environmentally Sound Coil Cleaner Application Instructions

- Although Environmentally Sound Coil Cleaner is harmless to humans, animals, and marine life, proper eye protection such as safety glasses is recommended during mixing and application.
- Remove all surface loaded fibers and dirt with a vacuum cleaner as described above.
- Thoroughly wet finned surfaces with clean water and a low velocity garden hose being careful not to bend fins.
- Mix Environmentally Sound Coil Cleaner in a $2^1/_2$ gallon garden sprayer according to the instructions included with the Enzyme Cleaner. The optimum solution temperature is 100 F.

NOTE: DO NOT USE water in excess of 130 F as the enzymatic activity will be destroyed.

- Thoroughly apply Environmentally Sound Coil Cleaner solution to all coil surfaces including finned area, tube sheets and coil headers.
- Hold garden sprayer nozzle close to finned areas and apply cleaner with a vertical, up-and-down motion. Avoid spraying in horizontal pattern to minimize potential for fin damage.
- Ensure cleaner thoroughly penetrates deep into finned areas.
- Interior and exterior finned areas must be thoroughly cleaned.
- Finned surfaces should remain wet with cleaning solution for 10 minutes.
- Ensure surfaces are not allowed to dry before rinsing. Reapply cleaner as needed to ensure 10-minute saturation is achieved.
- Thoroughly rinse all surfaces with low velocity clean water using downward rinsing motion of water spray nozzle. Protect fins from damage from the spray nozzle.

⚠ CAUTION

Harsh Chemical and Acid Cleaners — Harsh chemical, household bleach or acid cleaners should not be used to clean outdoor or indoors coils of any kind. These cleaners can be very difficult to rinse out of the coil and can accelerate corrosion at the fin/tube interface where dissimilar materials are in contact. If there is dirt below the surface of the coil, use the Environmentally Sound Coil Cleaner as described above.

High Velocity Water or Compressed Air — High velocity water from a pressure washer, garden hose or compressed air should never be used to clean a coil. The force of the water or air jet will bend the fin edges and increase airside pressure drop. Reduced unit performance or nuisance unit shutdown may occur.

Condenser Fans (30GXN,R Only) — Each fan is supported by a formed wire mount bolted to a fan deck and covered with a wire guard. The exposed end of the fan motor shaft is protected from weather by grease. If the fan motor must be removed for service or replacement, be sure to regrease fan shaft and reinstall fan cover, retaining clips, and fan guard. For proper performance, the fans should be positioned as shown in Fig. 20 or 21. Tighten setscrews to 14 ± 1 ft-lb (18 ± 1.3 N-m).

Check for proper rotation of the fan(s) once reinstalled (clockwise for high static and counterclockwise for standard viewed from above). If necessary to reverse, switch leads at contactor(s) in control box.

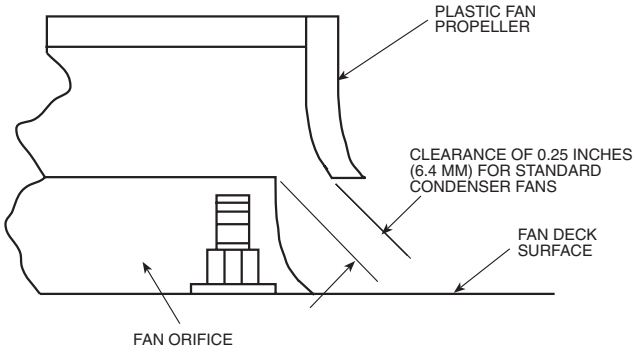

Fig. 20 — Condenser Fan Position (Standard Fan)

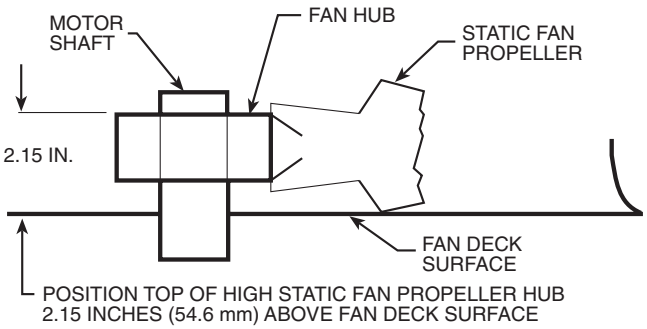

Fig. 21 — Condenser Fan Position (High Static Fan)

Refrigerant Charging/Adding Charge

IMPORTANT: These units are designed for use with R-134a only. DO NOT USE ANY OTHER REFRIGERANT in these units without first consulting your Carrier representative.

⚠ CAUTION

When adding or removing charge, circulate water through the condenser (30HXC) and cooler at all times to prevent freezing. Freezing damage is considered abuse and may void the Carrier warranty.

⚠ CAUTION

DO NOT OVERCHARGE system. Overcharging results in higher discharge pressure with higher cooling fluid consumption, possible compressor damage and higher power consumption.

Indication of low charge on a 30HXC system:

NOTE: To check for low refrigerant charge on a 30HXC unit, several factors must be considered. A flashing liquid line sight glass is not necessarily an indication of inadequate charge. There are many system conditions where a flashing sight glass occurs under normal operation. The 30HXC metering device is designed to work properly under these conditions.

1. Make sure that the circuit is running at a full-load condition. To check whether circuit A is fully loaded, enter the Outputs mode from the Navigator and then sub-mode 'CIR.A' or 'CIR.B' depending on the circuit under investigation. The circuit is fully loaded if its compressor and loader relays all show 'On'.
2. It may be necessary to use the Manual Control feature to force the circuit into a full-load condition. If this is the case, see the instructions for using the Manual Control feature in Table 11 of this manual.
3. With the circuit running at full load, verify that the cooler leaving fluid temperature is in the range of 38 to 46 F (3.3 to 7.8 C). Check pressure drop across liquid line strainer. Strainer is cleanable if necessary.
4. At this condition, observe the refrigerant in the liquid line sight glass. If there is a clear sight glass, and no signs of flashing, then the circuit is adequately charged. Skip the remaining steps.
5. If the refrigerant appears to be flashing, the circuit is probably low on charge. Verify this by checking the EXV Percent Open. This information is located under the sub-mode 'CIR.A' or 'CIR.B' (Outputs mode) and is shown as items 'EXV.A' and 'EXV.B' Scroll through the Navigator until the desired item is located.
6. If the EXV Percent Open is greater than 60%, and the liquid line sight glass is flashing, then the circuit is low on charge. Follow the procedure for adding charge for 30HXC units.

To add charge to the 30HXC systems:

1. Make sure that the unit is running at full load, and that the cooler leaving fluid temperature is in the range of 42 to 46 F (5.6 to 7.8 C).
2. At these operating conditions, check the liquid line sight glass. If there is a clear sight glass, then the unit has sufficient charge. If the sight glass is flashing, then check the EXV Percent Open. If this is greater than 60%, then begin adding charge.

   NOTE: A flashing liquid line sight glass at operating conditions other than those mentioned above is not necessarily an indication of low refrigerant charge.
3. Add 5 lb (2.3 kg) of liquid charge into the cooler using the fitting located on the tube entering the bottom of the cooler. This fitting is located between the Electronic Expansion Valve (EXV) (size 076-146 units), or the economizer (size 161-271 units) and the cooler.
4. Observe the EXV Percent Open value. The EXV should begin closing as charge is being added. Allow the unit to stabilize. If the EXV Percent Open remains above 60%, and the sight glass continues flashing, add an additional 5 lb (2.3 kg) of liquid charge.
5. Allow the unit to stabilize, and again check the EXV Percent Open. Continue adding 5 lb (2.3 kg) at a time of liquid refrigerant charge, and allow the unit to stabilize before checking the EXV position.
6. When the EXV Percent Open is in the range of 40 to 60%, check the liquid line sight glass. Slowly add enough additional liquid charge to ensure a clear sight glass. This should be done slowly to avoid overcharging the unit.
7. Verify adequate charge by continuing to run at full load with 42 to 46 F (5.6 to 7.8 C) cooler leaving fluid temperature. Check that the refrigerant is not flashing in the liquid-line sight glass. The EXV Percent Open should be between 40 and 60%. The cooler level indicator should be in the range of 1.5 to 2.2.

Indication of low charge on a 30HXA,GXN,GXR systems:

1. Make sure that the circuit is running at a full load condition and all condenser fans are energized and running on the keypad, at the appropriate line on the display. To check whether circuit A is fully loaded, enter the Outputs mode from the Navigator and then sub-mode 'CIR.A' or 'CIR.B' depending on the circuit under investigation. The circuit is fully loaded if its compressor and loader relays all show 'On'.
2. It may be necessary to use the Service Test feature to force the circuit into a full-load condition. If this is the case, see the instructions for using the Service Test feature in Table 12 of this manual.
3. With the circuit running at full-load, verify that the cooler leaving fluid temperature is in the range of 38 to 48 F (5.6 to 7.8 C).
4. For 30HXA chillers, raise the compressor discharge to approximately 125 F (51.7 C) saturated discharge temperature (185 psig [1276 kPa]). For 30GXN,R chillers, raise the compressor discharge to approximately 130 F (54.4 C) saturated discharge temperature (198 psig [1366 kPa]). Measure the liquid temperature entering the expansion device for 30HXA units. For 30GXN,R units, measure the liquid temperature after the tee where all liquid lines have joined. The liquid temperature should be approximately 107 F (41.7 C) for optimum charge. If the temperature is greater than 107 F (41.7 C) and the sight glass is flashing, the circuit is undercharged.
5. Add 5 lb (2.3 kg) of liquid charge into the cooler using the fitting located on the tube entering the bottom of the cooler. This fitting is located between the Electronic Expansion Valve (EXV) (30HXA076-146 units, 30GXN, R080-106, 114 units), or the economizer (30HXA161-271 units, 30GXN,R108, 115-350 units) and the cooler.
6. Allow the system to stabilize and then recheck the liquid temperature. Repeat Step 5 as needed allowing the system to stabilize between each charge addition. Slowly add charge as the sight glass begins to clear to avoid overcharging.

Oil Charging/Low Oil Recharging

OIL SPECIFICATION — If oil is added, it must meet the following Carrier specifications:

- Castrol . . . . . Icematic® SW-220
- Oil type . . . . . Inhibited polyolester-based synthetic compressor lubricant for use in screw compressors.
- ISO Viscosity Grade 220

This oil is available in the following quantities from your local Carrier representative (see Table 35).

Table 35 — Available Oil Quantities and Part Numbers

QUANTITY	TOTALINE PART NUMBER	RCD PART NUMBER
1 Quart	P903-1225	—
1 Gallon	P903-1201	PP23BZ104-001
5 Gallons	P903-1205	PP23BZ104-005

Addition of oil charge to 30HX,GXN,GXR systems:

1. If the 30HX,GXN,GXR unit shuts off repeatedly on Low Oil Level (Alert number 124 or 125), this may be an indication of inadequate oil charge. It could also mean simply that oil is in the process of being reclaimed from the low-side of the system.
2. Begin by running the unit at full load for $1^1/_2$ hours. Use the Manual Control feature of the software if the unit does not normally run at full load.
3. After running the unit for $1^1/_2$ hours, allow the unit to restart and run normally. If the Low Oil Level alarms persist, continue following this procedure.
4. Close the liquid line service valve, and place a pressure gage on top of the cooler. Enable the Service Test feature using the Navigator and turn the EOR switch to Enable. Start the desired compressor by turning it On under the 'COMP' sub-mode. Select item 'CC.A1' for compressor A1, 'CC.B1' for compressor B1, etc.
5. Before starting the compressor, the unit will go through its normal pre-lube pump routine. If there is an insufficient level of oil in the oil separator, the compressor will not start, and a pre-start oil pressure alarm will be posted. Skip to Step 8.
6. If the compressor starts successfully, observe the cooler pressure gage. When this gage reads approximately 10 psig, turn the selected compressor Off from the Navigator and move the EOR switch to the Off position.
7. Open the liquid line service valve and allow the unit to restart and run normally. If the Low Oil Level alarms persist, continue following this procedure.
8. If none of the previous steps were successful, the unit is low on oil charge. Add oil to the oil separator using the $^1/_4$-in. Schrader-type fitting on the discharge line entering the top of the oil separator (30HX units) or through the Schrader fitting on the top of the oil separator (30GXN,R units).

⚠ CAUTION

Do not add oil at any other location as improper unit operation may result.

9. Make sure that the unit is not running when adding oil, as this will make the oil charging process easier. Because the system is under pressure even when the unit is not running, it will be necessary to use a suitable pump (hand pump or electric pump) to add oil to the system.
10. Using a suitable pump, add $^1/_2$ gal. (1.89 L) of Castrol Icematic® SW-220 Polyolester oil (absolutely no substitutes are approved) to the system. Make sure that the oil level safety switch is NOT jumpered, and allow the unit to restart and run normally. Do not exceed maximum oil change. See Table 36.

Table 36 — Factory Oil Charges

UNIT SIZE	CIRCUIT A (gal)	CIRCUIT A (L)	CIRCUIT B (gal)	CIRCUIT B (L)
30GX080-178	5.0	18.9	5.0	18.9
30GX204-268	7.0	26.5	5.0	18.9
30GX281-350	7.0	26.5	7.0	26.5
30HXA076-186	5.0	18.9	5.0	18.9
30HXC076-186	4.5	17.0	4.5	17.0
30HXC206-271	7.5	28.4	5.0	18.9
30HXA206-271	8.0	30.2	5.0	18.9

11. If low oil level problems persist, add another 1.89 L ($^1/_2$ gal.) of oil. Continue adding oil in 1.89 L ($^1/_2$ gal.) increments until the problem is resolved. If it is necessary to add more than 5.75 L (1.5 gallons) of oil to the system, contact your Carrier representative.

Oil Filter Maintenance — Each compressor has its own internal oil filter and each circuit also has an in-line external filter. The internal oil filter pressure drop should be checked and filter changed (if necessary) after the initial 200 to 300 hours of compressor operation. Oil line pressure loss is monitored by the control and reported for each compressor as the oil filter pressure drop. This information can be found in the pressures mode of the Navigator for each circuit. The 'PRC.A' sub-mode contains oil filter pressure differentials for each Circuit A compressor (items 'FD.A1' 'FD.A2'). Similarly, the PRC.B sub-mode contains oil filter pressure differentials for each circuit B compressor (items FD.B1, FD.B2). This pressure differential (discharge pressure minus oil pressure, both from pressure transducer inputs) is typically 15 to 20 psi (103 to 138 kPa) for a system with clean internal and external filters. To determine the oil pressure drop due to the oil lines and external filter only, connect a gage to the oil pressure bleed port. See Fig. 21. Compare this value to the discharge pressure read at the Navigator. If this value exceeds 10 psi (69 kPa), replace the external filter. The difference between the gauge pressure and compressor oil pressure read at the Navigator is the pressure drop through the internal oil filter. Replace the internal oil filter if the pressure drop is greater than 25 psi (173 kPa) for 30HXC and 30 psi (207 kPa) for 30GXN,R and 30HXA chillers.

REPLACING THE EXTERNAL OIL FILTER

⚠ CAUTION

Compressor oil is pressurized. Use proper safety precautions when relieving pressure.

Fully front seat (close) the angle valves on the filter and at the compressor. Connect a charging hose to the oil pressure bleed port and drain the oil trapped between service valves. A quart (liter) of oil is typically what is removed during this process. Remove the charging hose.

Unscrew the nut from the other side of the filter and remove the old filter. Remove protective plastic caps from new filter and install. Draw a vacuum at the bleed port. Remove charging hose. Open angle valve enough to let oil flow. Check both fittings for leaks and repair if necessary. Backseat angle valve.

REPLACING THE INTERNAL OIL FILTER — Close the service valves at the compressor and drain the oil using the bleed port. If the oil pressure does not bleed off using this method it will be necessary to remove the entire circuit charge. Using a $^3/_4$-in. Allen wrench, remove the internal filter access cover (see Fig. 22). Remove the old filter. Replacement filters (one for each compressor) are factory supplied to cover the first changeout. After that, filters are field supplied. Lightly oil O-ring in the filter and install with filter open end first into the housing. Replace access cover and retorque to 75 ft-lb (101 N-m). Follow procedure in previous section for opening angle valve and purging lines. Check for leaks and repair if necessary.

Compressor Changeout Sequence — Compressor service requires metric tools and hardware. Change compressors according to the following procedure:

1. Turn off all main and control circuit power supplying the machine.
2. Close the discharge and liquid valve(s), suction valve (if equipped), and cooler inlet line service valve (if equipped), oil line shutoff valve, economizer bubbler tube valve (30HXA,C161-271 only) and minimum load shutoff valve (if equipped) for circuit to be changed. Disconnect the oil inlet line from the compressor. Disconnect oil filter with fitting at shutoff valve side and set filter and compressor inlet line assembly aside.
3. Remove any remaining refrigerant in the compressor and refrigerant lines using proper reclaiming techniques. All of the refrigerant that is in the cooler must be removed if there is no suction service valve installed on the cooler.

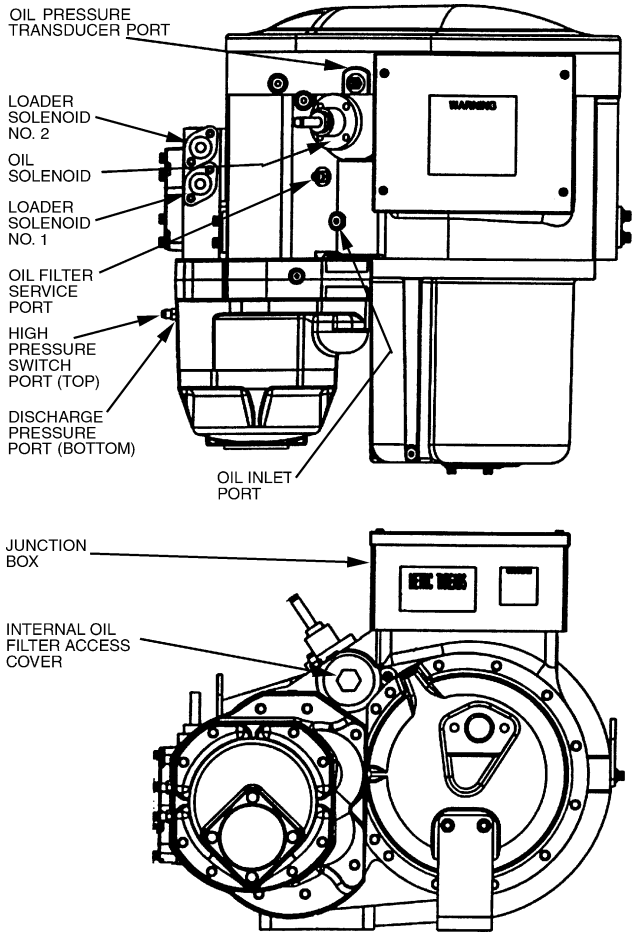

Fig. 22 — Compressor Component Diagram

IMPORTANT: Cooler and condenser pumps must be energized. Fluid must be flowing through heat exchangers whenever adding or removing charge.

4. Remove junction box cover of compressor to be changed. Check main power leads for marked numbers. If no numbers are visible on leads, mark leads with appropriate numbers to match those printed on the ends of the terminal lugs. **This is extremely important as power leads MUST be installed on the exact terminals from which they were removed.**
5. Disconnect main power leads from compressor terminal lugs. Mark remaining control circuit wires (connected together with wire nuts) for ease of reconnecting later. The following color scheme applies (verify with label diagram on panel):

Loader 1	2 Violet wires
Loader 2	2 Pink wires
Motor Cooling Solenoid	1 Blue wire, 1 Brown wire *
Oil Solenoid	1 Orange wire, 1 Brown wire*
High-Pressure Switch	2 Red wires

*One lead from the motor cooling and oil solenoids are connected together with a single brown wire.

6. Remove loader (mark solenoids no. 1 and 2 for replacement) and oil solenoids and high-pressure switch from compressor. Using 2 wrenches, carefully remove the oil pressure transducer from the compressor. These will all be reconnected to the replacement compressor.

   NOTE: Some oil will leak out of the transducer fitting when the transducer is removed. See Fig. 22.
7. Mark motor temperature leads (2 blue wires) and remove from quick connect terminals in the junction box.

⚠ CAUTION

The next steps involve compressor unbolting and removal. Compressor seals are made using O-rings. Use care when removing bolts and disconnecting flanges. The O-rings must NOT be re-used. New O-rings are provided with the replacement compressor. **The 06N screw compressors weigh approximately 920 lb (417 kg).** Be sure that an appropriate lifting cart or hoist is used to avoid injury. See Fig. 23 for lifting locations and center of gravity dimensions. Make sure compressor is properly rigged before unbolting.

8. Remove the 2 bolts securing the motor cooling/economizer line flange to the compressor.

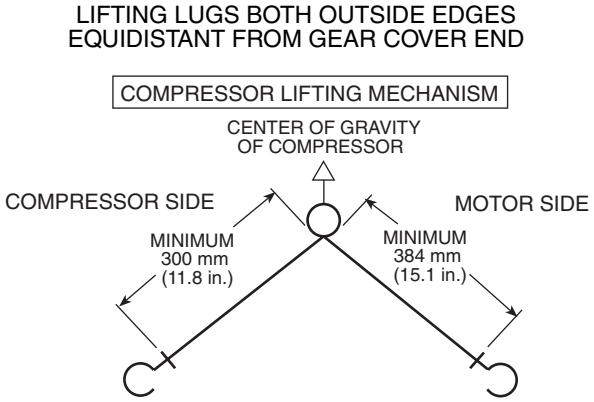

NOTE: Locate strap from center of gravity lifting ring and support motor casing to provide 3-point level rigging.

Fig. 23 — Compressor Lifting Diagrams

9. Remove the four M14 bolts securing the discharge line flange to the compressor. Two of the bolts also secure the mounting bracket for the external oil filter. Support the oil line to prevent damage to the line while the compressor is being changed. For 30GX units, place temporary protection over coils to prevent fin and tube damage.
10. Move lifting apparatus into place and attach to the 2 lifting rings on the compressor. Apply minimal tension to hold the compressor while the remaining bolts are removed.
11. Remove the $^3/_8$-in. holddown bolt securing the foot at the discharge end of the compressor to the mounting bracket on the cooler. A foot bracket will be mounted to the replacement compressor.
12. Remove the 4 lockwashers and nuts securing the compressor to the suction flange of the cooler. The compressor is held in place using four M14 x 2 studs through the suction nozzle of the cooler. The studs have an E-12 external Torx drive head. If possible, remove studs; if studs hit the cooler insulation, leave them in place — they will not interfere with compressor removal or installation. Save all the hardware as it will be needed to install the replacement compressor.
13. After checking to ensure all lines, wires, conduits, etc. are free and out of the way, remove compressor from cooler. Apply a light film of O-ring grease to new O-ring and place back into groove in mounting flange of compressor. If the new compressor is the A1/A2 (30HX units), A2 (30GXN,R204-268 units) or B2 (30GXN,R281-350 units) compressor, remove the compressor junction box and rotate it 180 degrees. Tighten screws to 6.8 to 9.5 N-m (5 to 7 ft-lb). The A1 and A2 compressors are on the right side of the unit when facing the unit control box.
14. Remove suction cover plate and bolts from new compressor and set compressor on unit flange. Thread the studs all the way back into the compressor. Install the 4 lockwashers and nuts finger-tight. Tighten bolts in a crossing pattern to a range of 81.4 to 135.6 N-m (60 to 100 ft-lb). Do NOT overtighten as damage may result to O-ring. Install and tighten holddown bolt in mounting foot.
15. Remove motor cooling/economizer and discharge line cover plates from new compressor.
16. Apply a light film of O-ring grease to motor cooling/economizer and discharge line O-rings, place back into grooves and install flange bolts. Tighten discharge line bolts in a crossing pattern to a range of 81.4 to 135.6 N-m (60 to 100 ft-lb). Tighten motor cooling/economizer bolts to a range of 81.4 to 108.5 N-m (60 to 80 ft-lb). Do NOT overtighten as damage may result to O-rings.
17. Reconnect the oil filter to the shutoff valve and oil line to the compressor. Install oil line straight into fitting until ferrule seats against fitting. Thread packing nut onto fitting and tighten finger tight. Use a backup wrench to finish tightening the nut. Do not overtighten.
18. Reinstall the loader and oil solenoids, high-pressure switch, and oil pressure transducer. Make sure the loader solenoids are installed on the correct number loader.
19. Reconnect conduits back into compressor junction box. Reconnect all wiring that was removed in Steps 4, 5, and 7. Temporarily install the reverse rotation low pressure switch that is supplied with the replacement compressor. Connect the switch to the second high pressure port using a standard $^1/_4$-in. service hose. The switch will not reset until 10 psig of pressure is present on the switch. Temporarily wire the reverse rotation low pressure switch in series with the compressor's high pressure switch as shown in Fig. 24.

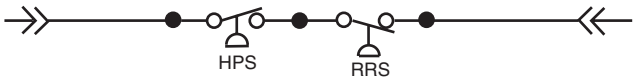

LEGEND
HPS — High-Pressure Switch
RRS — Reverse Rotation Switch (HK01CB002)

Fig. 24 — Reverse Rotation Switch Wiring

20. Leak check compressor and refrigerant lines with nitrogen. Repair any leaks found. Remove nitrogen from system. Evacuate compressor and refrigerant lines. Refer to the Refrigerant Charging/Adding Charge and Oil Charging/Low Oil Recharging sections on pages 53 and 54 for recharging procedures.
21. Open all shutoff valves and leak check the circuit and all fittings and joints. Repair any leaks found.
22. Reset the reverse rotation low pressure switch.
23. Restore main and control power to the machine. Put the Enable/Off/Remote Contact switch in the Enable position. Using the Navigator under the Service Test mode, turn the TEST sub-mode 'On'. Under the OUTS sub-mode, test each compressor's oil and motor cooling solenoids (items 'MC.A1', 'OS.A1', etc.). Next, locate and test each loader solenoid under the COMP sub-mode (items 'LD.A1', etc.). It is important that the loaders are located properly (loader 1 on right hand side when viewed from side opposite control box on 30HX units, on left hand side when reaching over compressor to far side on 30GX units).
24. Locate the appropriate compressor item ('CC.A1', etc.) under the COMP sub-mode and start the compressor. Press ENTER, followed by ▲ to change the value to On, and then ENTER again. Once the compressor has successfully started, energize both loaders one at a time. Let the circuit stabilize with both loaders energized. Refer to the Refrigerant Charging/Adding Charge and Oil Charging/Low Oil Recharging sections of this document for recharging procedures and performance criteria.
25. Once proper rotation has been verified, disconnect and lockout the power to the chiller. The reverse rotation low pressure switch can now be removed from the compressor and high pressure switch circuit.

BURNOUT CLEAN-UP PROCEDURE — If a screw compressor motor burns out on a 30GX,HX chiller, a simple clean-up should be performed. The following procedure provides the minimum steps to be taken before restarting the circuit.

1. Remove the oil from the oil separator. This can be facilitated by connecting a hose to the port located on the service valve entering the external oil filter. Run the hose to a container(s) that can hold up to 5 to 6 gallons (19 to 20 L) of oil. Pressurize the circuit to force out most of the oil in the separator. To remove the remaining oil, the pre-lube pump can be run in the Service Test mode from the Navigator. Enable the desired pump (either item 'OL.P.A' or 'OL.P.B' in the OUTS sub-mode). To prevent wear to the gears, do not allow the pre-lube pump to operate "dry."
2. Remove the failed compressor following the Compressor Changeout Sequence procedure on page 55.
3. Once the compressor is removed access the oil catch pan through the cooler-compressor mounting flange. Clean out any debris which may have collected in the oil catch pan.

4. Install a new compressor.
5. To dilute and remove any residual oil left in the separator, pump approximately $^1/_2$ gallon (2 L) of compressor oil into the oil separator using the Schrader port located on top of the separator (30GXN,R) or on the discharge line (30HX) and remove using the pre-lube pump described in Step 1.
6. Disconnect the hose from the external oil filter service valve.
7. Install a new filter drier and compressor external oil filter.
8. Measure in the amount of Castrol SW 220 Polyolester oil as specified on the nameplate of the chiller.
9. Leak check, evacuate and recharge the machine as described in this manual with the amount of R-134a stated on the chiller nameplate.
10. Perform periodic acid checks on the circuit and change the filter drier in the motor cooling line as necessary. Use the Carrier Standard Service Techniques Manual as a source of reference.

Moisture-Liquid Indicator — Clear flow of liquid refrigerant indicates sufficient charge in the system. Note, however, that bubbles in the sight glass do not necessarily indicate insufficient charge. Moisture in the system is measured in parts per million (ppm), changes of color of indicator are:

Green — moisture is below 80 ppm;
Yellow-green (chartreuse) — 80 to 225 ppm (caution);
Yellow (wet) — above 225 ppm.

Change filter drier at the first sign of moisture in the system.

IMPORTANT: Unit must in operation for at least 12 hours before moisture indicator can give an accurate reading. With the unit running, the indicating element must be in contact with liquid refrigerant to give true reading.

Filter Drier — Whenever moisture-liquid indicator shows presence of moisture, replace filter drier. Refer to Carrier Standards Service Technique Manual, Chapter 1, Refrigerants, for details on servicing filter driers. Cleanable strainers have been installed in each circuit's liquid line to aid in removal of system contaminants and debris.

Liquid Line Service Valve — This valve is located ahead of the filter drier and provides a $^1/_4$-in. Schrader connection (30GX only) for field charging. In combination with compressor discharge service valve, each circuit can be pumped down into the high side for servicing.

Thermistors — To aid in verifying thermistor performance, resistances at various temperatures are listed for all thermistors (except motor thermistors) in Tables 37A and 37B. See Table 38 for motor thermistor values.

LOCATION — General location of thermistor sensors and terminal connections in the control box are listed in Table 2.

THERMISTOR REPLACEMENT

⚠ CAUTION

Liquid level thermistors are installed in the top of the cooler using compression fittings. All other thermistors are installed in wells and will slide out of the wells easily. The wells are under refrigerant pressure (cooler EWT and LWT are under waterside pressure) and do not need to be removed to replace a faulty thermistor.

To Replace Thermistors T1, T2, T5, or T6 (Entering, Leaving Water; Discharge Gas Temperature) — Disconnect appropriate connector from the Main Base Board (MBB) or Screw Compressor Board (SCB). Thermistors T1 and T2 are connected to MBB-J8 and thermistors T5 and T6 are connected to EXV-J5. These four thermistors use insulation displacement connectors. New thermistors should be spliced to existing wiring close to the connector unless new connectors are required. A special AMP crimping tool, part no. 58580-1, is needed if new connectors are used. Remove thermistor cable from harness. Remove and discard original thermistor from well. Insert new thermistor in well body to its full depth. Add a small amount of thermal conductive grease to thermistor probe and well. Thermistors are friction-fit thermistors and will slip back into well located at the cooler head (T1, T2) or at the top of the condenser shell (T5, T6). Secure thermistor to well body with a wire tie to prevent thermistor from working its way out of the well. See Fig. 25.

To Replace Thermistors T3 or T4 (Liquid Level Sensors): — Liquid level sensor heaters have a nominal resistance of 31 ohms. With the sensor in free air (no heater), the nominal resistance can be checked. Find the ambient temperature where the sensor(s) are exposed to in Table 37A or 37B. Multiply the resistance value by 3 to obtain the level sensor resistance.

See the Inspecting/Opening Economizers section on page 48 for information on transferring the refrigerant charge to the high side. Transfer refrigerant and recover any refrigerant remaining in the low side.

NOTE: A new packing nut and ferrule will be required as the old one is not removable from the old thermistor.

For all units, disconnect plug assembly at liquid level sensor. Loosen the packing nut fully from the well threads. Remove and discard old thermistor and packing nut. Slide new packing nut then ferrule up onto new thermistor probe from inserted end. Insertion depth is dependent on unit model number. See Fig. 26 and Table 39.

Hand tighten packing nut to position ferrule while holding thermistor in position. With wrench, tighten enough to firmly secure thermistor in place in well. Connect plug assembly on new sensor to mating harness plug for all models. Thermistors are connected to the Screw Compressor Board (SCB) through either plug 13 (Circuit A) or plug 14 (Circuit B). Restore unit control power only and verify that level thermistor is reading correctly. Check system low side for leaks and repair as necessary. Evacuate low side and open circuit discharge and liquid valves.

To Service Compressor Motor Thermistors — Two thermistors are factory installed in each compressor. Connections for the thermistors are located in the compressor junction box. There are 3 terminals for the thermistors: S1, S2, and C. Motor temperature is measured by leads connected to one of the S terminals and the C terminal. If a compressor motor thermistor failure occurs, verify that there is a true short or open circuit at these terminals. If one of the thermistors fails, disconnect and relocate the wire on one of the S terminals to the other S terminal (S1 to S2 or S2 to S1). The thermistors are not serviceable in the field. If both of the compressor motor thermistors fail, compressor replacement is required. See Table 38 for motor thermistor temperature and resistance values.

Table 37A — Thermistor Temperatures (°F) vs Resistance/Voltage Drop
(NOTE: These values do NOT apply to the Motor Temperature Thermistors)

TEMP (F)	VOLTAGE DROP (V)	RESISTANCE (Ohms)
–25	4.821	98,010
–24	4.818	94,707
–23	4.814	91,522
–22	4.806	88,449
–21	4.800	85,486
–20	4.793	82,627
–19	4.786	79,871
–18	4.779	77,212
–17	4.772	74,648
–16	4.764	72,175
–15	4.757	69,790
–14	4.749	67,490
–13	4.740	65,272
–12	4.734	63,133
–11	4.724	61,070
–10	4.715	59,081
–9	4.705	57,162
–8	4.696	55,311
–7	4.688	53,526
–6	4.676	51,804
–5	4.666	50,143
–4	4.657	48,541
–3	4.648	46,996
–2	4.636	45,505
–1	4.624	44,066
0	4.613	42,679
1	4.602	41,339
2	4.592	40,047
3	4.579	38,800
4	4.567	37,596
5	4.554	36,435
6	4.540	35,313
7	4.527	34,231
8	4.514	33,185
9	4.501	32,176
10	4.487	31,202
11	4.472	30,260
12	4.457	29,351
13	4.442	28,473
14	4.427	27,624
15	4.413	26,804
16	4.397	26,011
17	4.381	25,245
18	4.366	24,505
19	4.348	23,789
20	4.330	23,096
21	4.313	22,427
22	4.295	21,779
23	4.278	21,153
24	4.258	20,547
25	4.241	19,960
26	4.223	19,393
27	4.202	18,843
28	4.184	18,311
29	4.165	17,796
30	4.145	17,297
31	4.125	16,814
32	4.103	16,346
33	4.082	15,892
34	4.059	15,453
35	4.037	15,027
36	4.017	14,614
37	3.994	14,214
38	3.968	13,826
39	3.948	13,449
40	3.927	13,084
41	3.902	12,730
42	3.878	12,387
43	3.854	12,053
44	3.828	11,730
45	3.805	11,416
46	3.781	11,112
47	3.757	10,816
48	3.729	10,529
49	3.705	10,250
50	3.679	9,979
51	3.653	9,717
52	3.627	9,461
53	3.600	9,213
54	3.575	8,973
55	3.547	8,739
56	3.520	8,511
57	3.493	8,291
58	3.464	8,076
59	3.437	7,868
60	3.409	7,665
61	3.382	7,468
62	3.353	7,277
63	3.323	7,091
64	3.295	6,911
65	3.267	6,735
66	3.238	6,564
67	3.210	6,399
68	3.181	6,238
69	3.152	6,081
70	3.123	5,929
71	3.093	5,781
72	3.064	5,637
73	3.034	5,497
74	3.005	5,361
75	2.977	5,229
76	2.947	5,101
77	2.917	4,976
78	2.884	4,855
79	2.857	4,737
80	2.827	4,622
81	2.797	4,511
82	2.766	4,403
83	2.738	4,298
84	2.708	4,196
85	2.679	4,096
86	2.650	4,000
87	2.622	3,906
88	2.593	3,814
89	2.563	3,726
90	2.533	3,640
91	2.505	3,556
92	2.476	3,474
93	2.447	3,395
94	2.417	3,318
95	2.388	3,243
96	2.360	3,170
97	2.332	3,099
98	2.305	3,031
99	2.277	2,964
100	2.251	2,898
101	2.217	2,835
102	2.189	2,773
103	2.162	2,713
104	2.136	2,655
105	2.107	2,597
106	2.080	2,542
107	2.053	2,488
108	2.028	2,436
109	2.001	2,385
110	1.973	2,335
111	1.946	2,286
112	1.919	2,239
113	1.897	2,192
114	1.870	2,147
115	1.846	2,103
116	1.822	2,060
117	1.792	2,018
118	1.771	1,977
119	1.748	1,937
120	1.724	1,898
121	1.702	1,860
122	1.676	1,822
123	1.653	1,786
124	1.630	1,750
125	1.607	1,715
126	1.585	1,680
127	1.562	1,647
128	1.538	1,614
129	1.517	1,582
130	1.496	1,550
131	1.474	1,519
132	1.453	1,489
133	1.431	1,459
134	1.408	1,430
135	1.389	1,401
136	1.369	1,373
137	1.348	1,345
138	1.327	1,318
139	1.308	1,291
140	1.291	1,265
141	1.289	1,240
142	1.269	1,214
143	1.250	1,190
144	1.230	1,165
145	1.211	1,141
146	1.192	1,118
147	1.173	1,095
148	1.155	1,072
149	1.136	1,050
150	1.118	1,029
151	1.100	1,007
152	1.082	986
153	1.064	965
154	1.047	945
155	1.029	925
156	1.012	906
157	0.995	887
158	0.978	868
159	0.962	850
160	0.945	832
161	0.929	815
162	0.914	798
163	0.898	782
164	0.883	765
165	0.868	750
166	0.853	734
167	0.838	719
168	0.824	705
169	0.810	690
170	0.797	677
171	0.783	663
172	0.770	650
173	0.758	638
174	0.745	626
175	0.734	614
176	0.722	602
177	0.710	591
178	0.700	581
179	0.689	570
180	0.678	561
181	0.668	551
182	0.659	542
183	0.649	533
184	0.640	524
185	0.632	516
186	0.623	508
187	0.615	501
188	0.607	494
189	0.600	487
190	0.592	480
191	0.585	473
192	0.579	467
193	0.572	461
194	0.566	456
195	0.560	450
196	0.554	445
197	0.548	439
198	0.542	434
199	0.537	429
200	0.531	424
201	0.526	419
202	0.520	415
203	0.515	410
204	0.510	405
205	0.505	401
206	0.499	396
207	0.494	391
208	0.488	386
209	0.483	382
210	0.477	377
211	0.471	372
212	0.465	367
213	0.459	361
214	0.453	356
215	0.446	350
216	0.439	344
217	0.432	338
218	0.425	332
219	0.417	325
220	0.409	318
221	0.401	311
222	0.393	304
223	0.384	297
224	0.375	289
225	0.366	282

Table 37B — Thermistor Temperatures (°C) vs Resistance/Voltage Drop (NOTE: These values do NOT apply to the Motor Temperature Thermistors)

TEMP (C)	VOLTAGE DROP (V)	RESISTANCE (Ohms)	TEMP (C)	VOLTAGE DROP (V)	RESISTANCE (Ohms)	TEMP (C)	VOLTAGE DROP (V)	RESISTANCE (Ohms)
–40	4.896	168,230	10	3.680	9,949	60	1.291	1,244
–39	4.889	157,440	11	3.633	9,485	61	1.258	1,200
–38	4.882	147,410	12	3.585	9,044	62	1.225	1,158
–37	4.874	138,090	13	3.537	8,627	63	1.192	1,118
–36	4.866	129,410	14	3.487	8,231	64	1.160	1,079
–35	4.857	121,330	15	3.438	7,855	65	1.129	1,041
–34	4.848	113,810	16	3.387	7,499	66	1.099	1,006
–33	4.838	106,880	17	3.337	7,161	67	1.069	971
–32	4.828	100,260	18	3.285	6,840	68	1.040	938
–31	4.817	94,165	19	3.234	6,536	69	1.012	906
–30	4.806	88,480	20	3.181	6,246	70	0.984	876
–29	4.794	83,170	21	3.129	5,971	71	0.949	836
–28	4.782	78,125	22	3.076	5,710	72	0.920	805
–27	4.769	73,580	23	3.023	5,461	73	0.892	775
–26	4.755	69,250	24	2.970	5,225	74	0.865	747
–25	4.740	65,205	25	2.917	5,000	75	0.838	719
–24	4.725	61,420	26	2.864	4,786	76	0.813	693
–23	4.710	57,875	27	2.810	4,583	77	0.789	669
–22	4.693	54,555	28	2.757	4,389	78	0.765	645
–21	4.676	51,450	29	2.704	4,204	79	0.743	623
–20	4.657	48,536	30	2.651	4,028	80	0.722	602
–19	4.639	45,807	31	2.598	3,861	81	0.702	583
–18	4.619	43,247	32	2.545	3,701	82	0.683	564
–17	4.598	40,845	33	2.493	3,549	83	0.665	547
–16	4.577	38,592	34	2.441	3,404	84	0.648	531
–15	4.554	38,476	35	2.389	3,266	85	0.632	516
–14	4.531	34,489	36	2.337	3,134	86	0.617	502
–13	4.507	32,621	37	2.286	3,008	87	0.603	489
–12	4.482	30,866	38	2.236	2,888	88	0.590	477
–11	4.456	29,216	39	2.186	2,773	89	0.577	466
–10	4.428	27,633	40	2.137	2,663	90	0.566	456
–9	4.400	26,202	41	2.087	2,559	91	0.555	446
–8	4.371	24,827	42	2.039	2,459	92	0.545	436
–7	4.341	23,532	43	1.991	2,363	93	0.535	427
–6	4.310	22,313	44	1.944	2,272	94	0.525	419
–5	4.278	21,163	45	1.898	2,184	95	0.515	410
–4	4.245	20,079	46	1.852	2,101	96	0.506	402
–3	4.211	19,058	47	1.807	2,021	97	0.496	393
–2	4.176	18,094	48	1.763	1,944	98	0.486	385
–1	4.140	17,184	49	1.719	1,871	99	0.476	376
0	4.103	16,325	50	1.677	1,801	100	0.466	367
1	4.065	15,515	51	1.635	1,734	101	0.454	357
2	4.026	14,749	52	1.594	1,670	102	0.442	346
3	3.986	14,026	53	1.553	1,609	103	0.429	335
4	3.945	13,342	54	1.513	1,550	104	0.416	324
5	3.903	12,696	55	1.474	1,493	105	0.401	312
6	3.860	12,085	56	1.436	1,439	106	0.386	299
7	3.816	11,506	57	1.399	1,387	107	0.370	285
8	3.771	10,959	58	1.363	1,337			
9	3.726	10,441	59	1.327	1,290			

Table 38 — Thermistor Temperature vs Resistance, Motor Temperature Thermistors

TEMP (F)	TEMP (C)	RESISTANCE (Ohms)
–22	–30	88,480.0
–13	–25	65,205.0
–4	–20	48,536.0
5	–15	36,476.0
14	–10	27,663.0
23	–5	21,163.0
32	0	16,325.0
41	5	12,696.0
50	10	9,949.5
59	15	7,855.5
68	20	6,246.0
77	25	5,000.0
86	30	4,028.4
95	35	3,265.7
104	40	2,663.2
113	45	2,184.2
122	50	1,801.2
131	55	1,493.1
140	60	1,243.9
149	65	1,041.4
158	70	875.8
167	75	739.7
176	80	627.6
185	85	534.9
194	90	457.7
203	95	393.3
212	100	339.3
221	105	293.8
230	110	255.3
239	115	222.6
248	120	194.8

NOTE: Motor temperature thermistor values must be verified using resistance. Voltage drop cannot be used.

Table 39 — Thermistor (Liquid Level Sensor) Depth

UNIT MODEL NUMBER	THERMISTOR DEPTH "X"-in. (mm)
30GXN,R080, 083, 090, 093	6.00 (152.4)
30GXN,R106-115	4.25 (108.0)
30GXN,R118, 125, 135, 178	5.56 (141.2)
30GXN,R128, 138, 150, 153	6.00 (152.4)
30GXN,R160	4.25 (108.0)
30GXN,R163, 174, 175	4.25 (108.0)
30GXN,R204-228	3.94 (100.0)
30GXN,R249-268	4.82 (122.4)
30GXN,R281-350	5.00 (127.0)
30HXA,C076-086	5.13 (130.3)
30HXA,C096	6.00 (152.4)
30HXA,C106	4.25 (108.0)
30HXA,C116-126	5.13 (130.3)
30HXA,C136-146	6.00 (152.4)
30HXA,C161-171	4.25 (108.0)
30HXA,C186	5.56 (141.2)
30HXA,C206	3.94 (100.0)
30HXA,C246-271	4.82 (122.4)

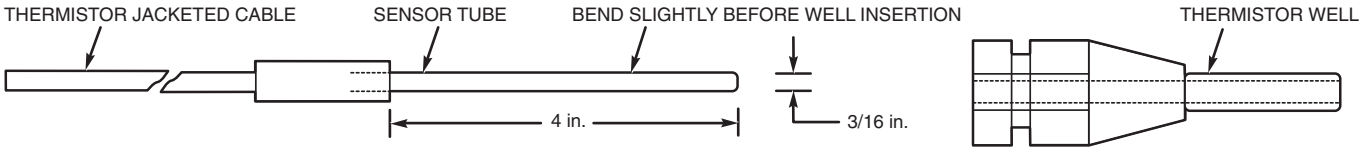

Fig. 25 — Thermistor Replacement (T1, T2, T5, or T6)

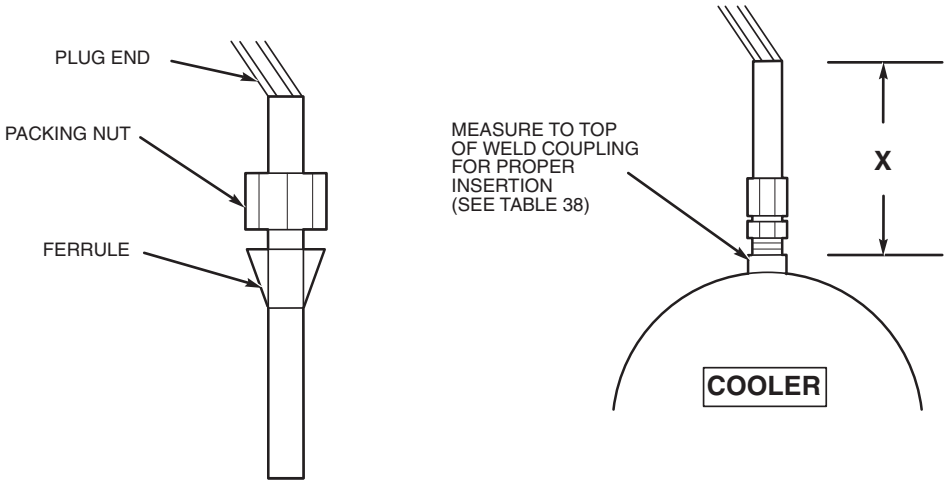

Fig. 26 — Thermistor (Liquid Level Sensor) Replacement

Pressure Transducers — Discrete high and low pressure transducers are used for pressure sensing on all 30GXN,GXR,HX chillers. The discharge and oil pressure transducers are high pressure transducers, and the suction and economizer pressure transducers are low pressure transducers (white dot). No pressure transducer calibration is required. The transducers operate on a 5 vdc supply, which is generated by the Main Base Board (MBB) for suction and discharge pressure transducers and by the Screw Compressor Board (SCB) for the oil and economizer pressure transducers. See unit wiring labels for specific MBB and SCB pressure transducer power and signal connections. Refer to Fig. 27A and 27B for pressure transducer locations.

TROUBLESHOOTING — If transducer is suspected of being faulty, first check supply voltage to transducer. Supply voltage should be 5 vdc ± .2 v. If supply voltage is correct, compare pressure reading displayed on keypad and display module against pressure shown on a calibrated pressure gage. If the 2 pressure readings are not reasonably close, replace pressure transducer. Low pressure transducers suction and economizer pressures should be within ± 2 psig. Discharge and oil pressures should be within ± 5 psig.

FLOW SENSOR — Figure 28 shows a typical view of the flow sensor as attached to a victaulic nozzle. It also shows the connector pin orientation of the sensor. If nuisance trips of the sensor are occurring, follow the steps below to correct the situation:

When power is supplied to the device, a warm-up period is initiated. During this period, the right-most green LED is lit and turned off as each LED to the left is successively lit until the left-most red LED is lit. The warm-up period may take up to 30 seconds. When some flow is detected but not enough for machine operation, a red LED at the far left will be illuminated. With increasing flow, successive red LEDs illuminate. When the switch determines flow is present, the amber LED illuminates indicating the output has closed. **This is not an indication of minimum flow.** Increasing flow above the amber LED output indication illuminates the first green LED. Each successive green LED indicates greater flow. The switch closure does not indicate minimum flow for the machine. With one green LED lit, minor fluctuations in water flow may cause nuisance alarms. Additional green LEDs indicate higher flow rates, and can avoid the nuisance alarms. Refer to Fig. 29.

1. Check to confirm that all strainers are clean, valves are open and pumps are running. For the case of VFD controlled pumps, ensure that the minimum speed setting has not been changed.
2. Measure the pressure drop across the cooler and using Appendix E on pages 87-92, calculate the cooler flow and compare this to the system requirements.
3. If the measured flow rate through the cooler agrees with the system requirements. At least 2 green LEDs should be lit.
4. If the contacts do not close while two green LEDs are lit, verify operation of the flow switch relay. Without changing fluid flow through the cooler, check for power at the flow switch relay (FSR) coil. If power is not present, check continuity of flow sensor cable. If the sensor cable is not shorted or open when correct flow has been confirmed and the green sensor LEDs are lit, the sensor has failed and must be replaced.

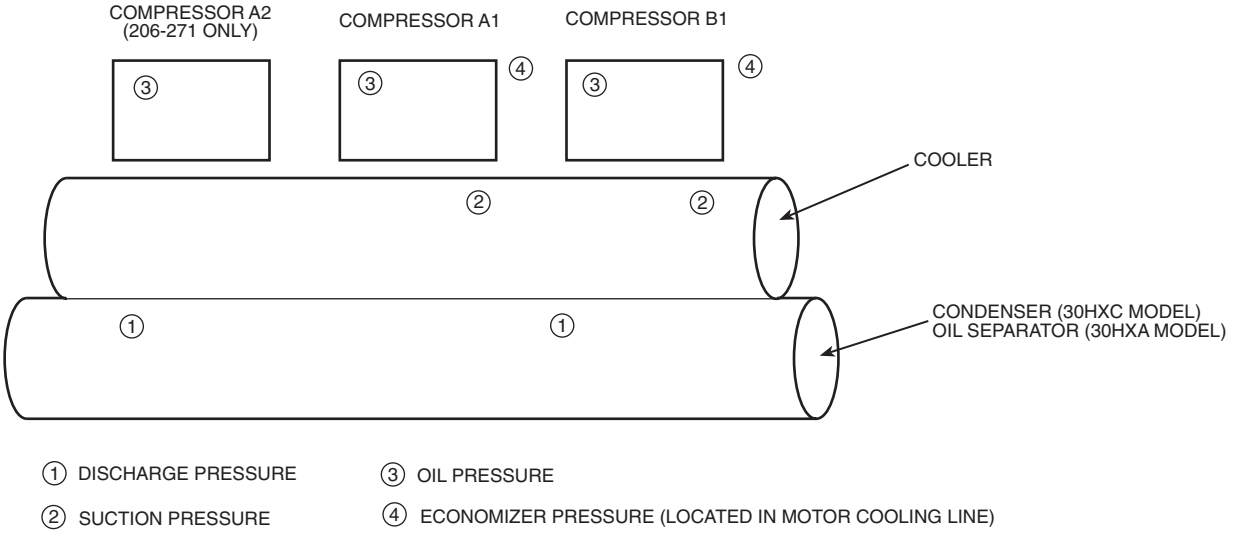

Fig. 27A — 30HX Pressure Transducer Locations

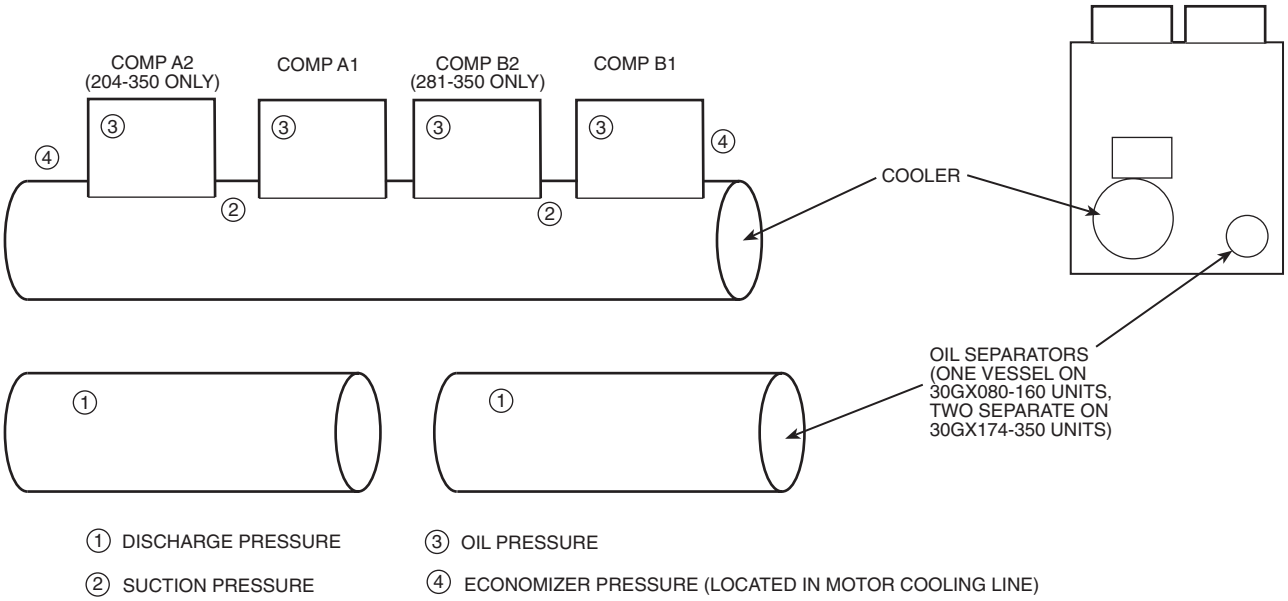

Fig. 27B — 30GXN,R Pressure Transducer Locations

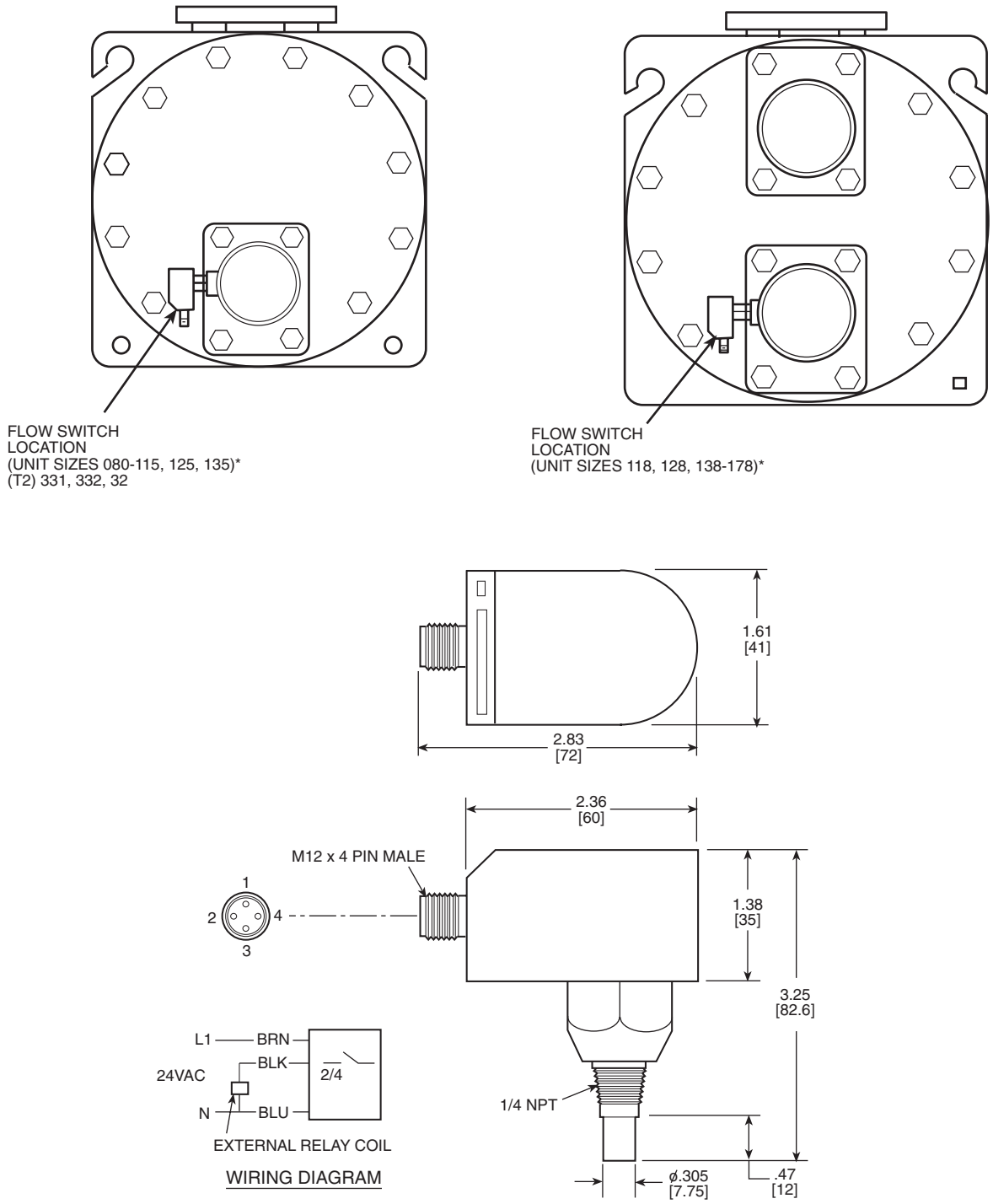

*And associated modular units.

Fig. 28 — 30GXN,R Flow Sensor

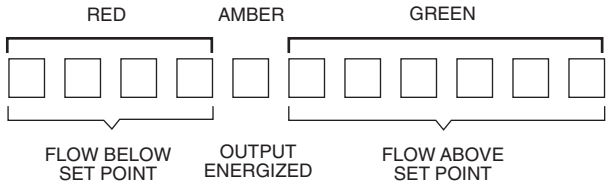

Fig. 29 — Chilled Water Flow Switch LED Display

Safety Devices — The 30GX,HX chillers contain many safety devices and protection logic built into the electronic control. Following is a description of the major safeties.

COMPRESSOR PROTECTION

Motor Overload — The compressor protection modules (CCP) protect each compressor against overcurrent. Do not bypass the current transducers or make any changes to the factory-installed and configured 8-pin headers. The configuration of these headers defines the Must Trip Amps (MTA) at which the CCP will turn the compressors off. Determine the cause for trouble and correct the problem before resetting the CCP. See Appendix A for setting of MTAs and configuration headers.

Each CCP board also reads the status of each compressor's high-pressure switch. All compressors have factory-installed high-pressure switches. For 30GX units, the switch is set to trip at 303 ± 7 psig (2089 ± 48 kPa). The setting for 30HXA units is 275 ± 7 psig (1896 ± 48 kPa) and for 30HXC units the setting is 191 ± 7 psig (1317 ± 48 kPa). If the switch opens during operation, the compressor will be shut down. The CCP will reset automatically when the switch closes, however, a manual reset is required to restart the compressor.

OIL SEPARATOR HEATERS (30GX) — Each oil separator circuit has a heater mounted on the underside of the vessel. The heater is energized with control circuit power. Oil heaters are energized when the discharge gas temperature falls below 105 F (40.6 C). The heaters are deenergized when the discharge gas temperature rises above 110 F (43.3 C). The control will allow the chiller to attempt to start with the heaters energized and will keep the heaters on, even when running, until the discharge gas temperature reaches 110 F (43.3 C). Note that the oil heaters are deenergized if the oil level switch is open.

COOLER PROTECTION

Low Water Temperature — Microprocessor is programmed to shut the chiller down if the leaving fluid temperature drops below 34 F (1.1 C) for water or more than 8° F (4.4° C) below set point for brine units. When the fluid temperature rises 6° F (3.3° C) above the leaving fluid set point, the safety resets and the chiller restarts. Reset is automatic as long as this is the first occurrence of the day.

> IMPORTANT: If the unit is installed in an area where ambient temperatures fall below 32 F (0° C), cooler heaters and inhibited ethylene glycol or other suitable solution must be used in the chilled fluid circuit.

Relief Devices — Fusible plugs are located in each circuit (30GX only) between the condenser and the liquid line shutoff valve.

PRESSURE RELIEF VALVES — Valves are installed in each circuit and are located on all coolers. One relief valve is also installed on each 30HXC condenser. Both circuits' oil separators on 30GXN,R and 30HXA units have factory-installed relief valves as well. These valves are designed to relieve if an abnormal pressure condition arises. Relief valves on all coolers and 30HXC condensers relieve at 220 psi (1517 kPa). Relief valves on 30GXN,R and 30HXA oil separators relieve at 320 psi (2206 kPa). All 30HXA, HXC units with factory-installed suction service valves also have a relief valve in each compressor discharge line. These valves are designed to relieve at 350 psig (2413 kPa). These valves should not be capped. If a valve relieves, it should be replaced. If the valve is not replaced, it may relieve at a lower pressure, or leak due to trapped dirt from the system which may prevent resealing.

Pressure relief valves located on cooler and condenser shells and 30HXA oil separator shells have $^3/_4$-in. NPT connections for relief. The 30GXN,R oil separators have $^1/_2$-in. male flare connections. Some local building codes require that relieved gases be removed. This connection allows conformance to this requirement.

Control Modules

> **⚠ CAUTION**
>
> Turn controller power off before servicing controls. This ensures safety and prevents damage to controller.

MAIN BASE BOARD (MBB), SCREW COMPRESSOR BOARD (SCB), EXPANSION VALVE BOARD (EXV), ENERGY MANAGEMENT MODULE (EMM), *COMFORT*LINK™ COMPRESSOR PROTECTION BOARDS (CCP) AND THE NAVIGATOR — All of the *Comfort*Link modules perform continuous diagnostic evaluations of the condition of the hardware. Proper operation and communication of these modules is indicated by LEDs on the surface of each module (all except the Navigator that displays 'Communication Failure' when it occurs).

RED LED — All module red LEDs will blink in unison at a 1 to 2 second rate when communicating and functioning properly. Lighted continuously indicates a problem requiring replacement of module. Off continuously indicates power should be checked. If there is no input power, check fuses. If fuse is bad, check for shorted secondary of transformer, tripped circuit breaker or bad module. An LED blinking at a rate of twice per second indicates potential loss of program. The suspect board(s) should be downloaded using the SmartLoader program. If this is not successful, the module should be replaced.

GREEN LED — Each module has a green LED that should always be blinking when power is on. Each module's green LED will be blinking at different rates. This is a normal condition. If the green LED is not blinking, check the red LED. If the red LED is normal, verify that all communication connections (J3 for MBB, J3/J4 for SCB, EXV, EMM and J10/J11 for CCP1 and CCP2) are correct. If wiring is correct, check the Main Base Board instance jumper (should be set to '1'). The EXV, EMM and SCB module address switches should all be set to ON. For CCP1, switch 1 should be On and switches 2, 3 and 4 should be Off. For CCP2, switches 1,3 and 4 should be On and switch 2 should be Off. Remote terminal strip (TB3) connections are made to the Main Base Board at plug MBB-J5.

YELLOW LED — The Main Base Board (MBB) has a yellow LED. This light will blink whenever CCN (Carrier Comfort Network) communications are in progress. Only the MBB is designed to communication on the CCN bus. All other modules (including the Navigator) are designed to communicate only on the LEN bus.

The majority of the system operating intelligence resides in the MBB, however each individual module does have its own operating software. The machine operator communicates with the MBB through the Navigator. Communications between all modules is accomplished by a 3-wire sensor bus called the Local Equipment Network (LEN). These 3 wires run in parallel from module to module.

For all models, control modules are powered by 24 vac power sources protected by circuit breakers. Separate power sources are used for the CCP modules. Refer to the 24-v wiring schematic located on the chiller for detailed information. Refer to Table 40 for control troubleshooting information.

Table 40 — Compressor Control Troubleshooting

SYMPTOMS	CAUSE	REMEDY
COMPRESSOR DOES NOT RUN	Power line open Control fuse open High-Pressure Switch (HPS) tripped Loose terminal connection Improperly wired controls Low line voltage Compressor motor defective Seized compressor Pre-lubrication not successful	Check main disconnect. Check control circuit for ground or short. Replace fuse. Use Navigator to reset current alarms. Check connections from CCP to contactor Check wiring and rewire. Check line voltage. Determine location of voltage drop and remedy deficiency. Check motor winding for open or short. Replace compressor if necessary. Replace compressor. Check oil pump operation, oil pressure transducer, verify oil solenoid valve operation.
COMPRESSOR CYCLES OFF ON LOW SATURATED SUCTION TEMPERATURE	Loss of charge Bad transducer Low refrigerant charge Failed expansion device Partially plugged or plugged strainer	Repair leak and recharge. Replace transducer. Add refrigerant. Repair/replace as needed. Remove and clean strainer.
COMPRESSOR SHUTS DOWN ON HIGH PRESSURE CONTROL	High-pressure switch erratic in action Compressor discharge valve partially closed Condenser fan(s) not operating (air cooled units) Condenser coil plugged or dirty (air cooled units) Condenser water valve not operating (water cooled units) Circuit overcharged	Replace switch. Open valve or replace if defective. Check wiring. Repair or replace motor(s) if defective. Clean coil. Check wiring. Repair or replace valve if defective. Clean condenser.
UNIT OPERATES LONG OR CONTINUOUSLY	Low refrigerant charge Control contacts fused Partially plugged or plugged strainer Defective insulation Service load exceeding design capacity Inefficient compressor	Add refrigerant. Replace control. Clean or replace. Replace or repair. Evaluate load requirements. Check loader solenoid valves. Replace if necessary.
SYSTEM NOISES	Piping vibration Expansion valve hissing Compressor noisy	Support piping as required. Add refrigerant. Check for plugged liquid line strainer. Replace compressor (worn bearings). Check for loose compressor bolts securing compressor to cooler.
COMPRESSOR LOSES OIL	Leak in system Mechanical damage to rotors	Find and repair leak. Replace compressor.
HOT LIQUID LINE	Shortage of refrigerant due to leak	Repair leak and recharge.
FROSTED LIQUID LINE	Shutoff valve partially closed or restricted	Open valve or remove restriction.
COMPRESSOR LOADERS NOT WORKING PROPERLY	Burned out coil Defective loader solenoid valve Miswired solenoid	Replace coil. Replace valve. Rewire correctly.

Carrier Comfort Network (CCN) Interface — The 30GX,HX chiller units can be connected to the CCN if desired. The communication bus wiring is a shielded, 3-conductor cable with drain wire and is supplied and installed in the field. The system elements are connected to the communication bus in a daisy chain arrangement. The positive pin of each system element communication connector must be wired to the positive pins of each system element. Wiring connections for CCN can be made at terminal block TB3. There are four terminals (including shield) located at TB3 for permanent CCN connection. For temporary CCN connection to the chiller, there is also an RJ-14 (6 position, 6 conductor) connector. The connector is for field connection of a laptop computer running Service Tool or ComfortVIEW™ software programs. Consult CCN Contractor's Manual for further information.

NOTE: Conductors and drain wire must be 20 AWG (American Wire Gage) minimum stranded, tinned copper. Individual conductors must be insulated with PVC, PVC/nylon, vinyl, Teflon, or polyethylene. An aluminum/polyester 100% foil shield and an outer jacket of PVC, PVC/nylon, chrome vinyl, or Teflon with a minimum operating temperature range of –20 C to 60 C is required. Wire manufactured by Alpha (2413 or 5463), American (A22503), Belden (8772), or Columbia (02525) meets the above mentioned requirements.

It is important when connecting to a CCN communication bus that a color coding scheme be used for the entire network to simplify the installation. It is recommended that red be used for the signal positive, black for the signal negative, and white for the signal ground. Use a similar scheme for cables containing different colored wires.

At each system element, the shields of its communication bus cables must be tied together. If the communication bus is entirely within one building, the resulting continuous shield must be connected to a ground at one point only. If the communication bus cable exits from one building and enters another, the shields must be connected to grounds at the lightning suppressor in each building where the cable enters or exits the building (one point per building only).

> IMPORTANT: A shorted CCN bus cable will prevent some routines from running and may prevent the unit from starting. If abnormal conditions occur, disconnect the CCN bus. If conditions return to normal, check the CCN connections and cable. Run new cable if necessary. A short in one section of the bus can cause problems with all system elements on the bus.

Replacing Defective Modules — The *Comfort*-Link™ replacement modules are shown in Table 41. The unit model and serial numbers are printed on the unit nameplate located on an exterior corner post (30GX) or the corner of the control box (30HX). The proper software and unit configuration data is factory installed by Carrier in the replacement module. Therefore, when ordering any replacement module, specify the replacement part number (located on each module front or back), *full* unit model number and serial number. The replacement modules will be downloaded with all required operating software. If the Main Base Board (MBB) has been replaced, verify that all configuration data is correct. Follow the configuration mode table and verify that all items under sub-modes UNIT, OPT1 and OPT2 are correct. Any additional field installed accessories or options (RSET,SLCT sub-mode) should also be verified.

Table 41 — Replacement Module Part Number

MODULE	REPLACEMENT PART NUMBER (With Software)	REPLACEMENT PART NUMBER (Without Software)
Main Base Board (MBB)	30HX501314	HK50AA029
Expansion Valve Board (EXV)	30HX515217	HK50AA026
Screw Compressor Board (SCB)	30HX501316	HK50AA032
Navigator Display	HK50AA033	N/A
Energy Management Module (EMM)	30HX515218	HK50AA028
*Comfort*Link Compressor Protection Boards (CCP1, CCP2)	HN67LM103	N/A

Refer to the Start-Up Checklist for 30GXN,GXR,HX Liquid Chillers (completed at time of original start-up) found in the job folder. This information is needed later in this procedure. If the checklist does not exist, fill out the current information in the Configuration mode on a new checklist. Tailor the various options and configurations as needed for this particular installation.

⚠ CAUTION

Electrical shock can cause personal injury. Disconnect all electrical power before servicing.

1. Check that all power to unit is off. Carefully disconnect all wires from the defective module by unplugging its connectors. Remove the screw securing the communication drain wire (CCP modules only). Save the screws.
2. Remove the defective module by removing its mounting screws with a Phillips screwdriver, and removing the module from the control box. Save the screws later use. For Navigator replacement, remove the screw securing the cable clamp near TB3.
3. Verify that the instance jumper (MBB) or address switches (all other modules) exactly match the settings of the defective module.
4. Package the defective module in the carton of the new module for return to Carrier.
5. Mount the new module in the unit's control box using a Phillips screwdriver and the screws saved in Step 2.
6. Reinstall all module connectors and communication drain wire (CCP modules only). For Navigator replacement, make sure the plug is installed at TB3 in the LEN connector.
7. Carefully check all wiring connections before restoring power.
8. Verify the Enable/Off/Remote Contact switch is in the OFF position.
9. Restore control power. Verify that all module red LEDs blink in unison. Verify that all green LEDs are blinking and that the Navigator is communicating correctly.
10. Verify all configuration information, settings, setpoints and schedules. Return the Enable/Off/Remote Contact switch to normal operation position.

Winter Shutdown Preparation — At the end of each cooling season the fluid should be drained from the system. However, due to the cooler circuiting, some fluid will remain in the cooler after draining. To prevent freeze-up damage to the cooler tubes perform the following procedure.

1. If cooler heaters have been installed, deenergize the heaters to prevent damage and possible safety hazards when draining, or when there is no liquid in the system. Remove Fuse 1 to deenergize the heaters. Drain the fluid from the system.
2. Isolate the cooler from the rest of the system with water shut off valves.
3. Fill the cooler with an appropriate amount of inhibited ethylene glycol solution (or other suitable corrosion-inhibitive antifreeze) for 15° F (8.3° C) below the expected low ambient conditions (5 gallon minimum).
4. Leave the cooler filled with the antifreeze solution for the winter, or drain if desired. Be sure to deenergize heaters (if installed) as explained in Step 1 to prevent damage. Use an approved method of disposal when removing the antifreeze solution.

Maintenance

RECOMMENDED MAINTENANCE SCHEDULE — The following are only recommended guidelines. Job site conditions may dictate that maintenance schedules be performed more frequently than listed here.

ROUTINE (as conditions dictate)

30GX machines with E-coat condenser coils:

- Check condenser coils for debris, clean as necessary
- Periodic clean water rinse, especially in coastal and industrial applications.

MONTHLY

30GX machines with E-coat Condenser Coils:

- Check condenser coils for debris, clean as necessary
- Coil cleaning with Carrier approved coil cleaner.

EVERY 3 MONTHS

All machines:

- Check all refrigerant joints and valves for refrigerant leaks, repair as necessary.
- Check moisture indicating sight glass for possible refrigerant loss and presence of moisture.
- Check oil filter pressure drops, replace as necessary.
- Check chilled water flow switch operation.

30GX machines:

- Check condenser coils for debris, clean as necessary.
- Check condenser fan operation.

YEARLY:

All machines:

- Check all electrical connections. Tighten as necessary.
- Check accuracy of all transducers for each circuit, replace as necessary.
- Check accuracy of thermistors, replace if greater than ± 2° F (1.2° C) variance from calibrated thermometer.
- Obtain and test an oil sample, change as necessary.
- Clean cooler tubes if appropriate.
- Check to be sure that the proper concentration of antifreeze is present in the chilled water loop.
- Check to be sure that the proper amount of inhibitor is present in the chilled water loop.
- Check all refrigerant strainers and filter driers for pressure drops, replace/clean as necessary
- Check chilled water strainers, clean as necessary

30GX machines:

- Check cooler heater operation
- Check condenser fan blades to insure they are securely fastened to the motor shaft and their condition.

30HXC machines:

- Check Condenser Water Regulating Valve operation, if equipped.
- Clean condenser tubes if appropriate.
- Check condenser water strainers, clean as necessary

PRE-START-UP PROCEDURE

IMPORTANT: Before beginning Pre-Start-Up or Start-Up, complete the Start-Up Checklist for the 30GX,HX Liquid Chillers on pages CL-1 to CL-10. This Checklist assures proper start-up of the chiller, and provides a record of unit condition, application requirements, system information and operation at initial start-up. The checklist should be removed from the manual and kept with the job file for future reference.

IMPORTANT: DO NOT ATTEMPT TO START THE CHILLER UNTIL THE FOLLOWING CHECKS HAVE BEEN COMPLETED.

⚠ CAUTION

DO NOT make any changes to the factory-installed compressor power wiring in the control box or at the compressor junction box. Doing so will cause permanent damage to the compressor and will require compressor replacement. Proper phasing has already been checked at the factory.

System Check

1. Check all auxiliary components such as the chilled fluid circulating pump, air-handling equipment, or other equipment to which the chiller supplies liquid. Consult the manufacturer's instructions. If the unit has field-installed accessories, be sure all are properly installed and wired correctly. Refer to the unit wiring diagrams.
2. Check the cooler flow switch for proper operation (item 'FLOW', Inputs mode under sub-mode GEN.I). Ensure sensor contacts close when the pump is on and open when the pump is turned off. A flow switch is factory installed on all models with two or more pass coolers. For single pass cooler models, the flow switch is factory supplied for field installation with factory-supplied victaulic nozzles.
3. Open the discharge and liquid valves in each circuit. The discharge shutoff valves are in-line ball type and are open when parallel with the refrigerant flow.
4. If factory-installed suction service valves are installed, open the suction service valves in each circuit. Service valve is located below the compressor in the cooler suction connection flange. To operate the valve, first remove the cap. Use a back-up wrench on the packing gland to prevent loosening while removing cap. Loosen the jam nut. Rotating the valve handle clockwise will close valve and counterclockwise will open valve. When closing the valve, the linkage arm must swing past center of the actuator shaft cam to seat and prevent accidental opening of the valve. Tighten the jam nut. See Fig. 30 and 31.
5. Open the oil shutoff valves located by the oil pre-filter. Open bubbler tube valve on 30HX machines equipped with economizers.
6. Check the tightness of all electrical connections. Check incoming power supply for proper nameplate voltage.
7. Check to ensure the unit is level per the installation instructions.
8. Check all field configuration data and set points.
9. Enter correct date, time, and operating schedule(s).
10. Verify operation of solenoids, pumps, valves, compressors, fans, etc. as listed in the Start-Up Checklist.
11. Open condenser water valves. Check condenser water pump for proper operation (30HX).

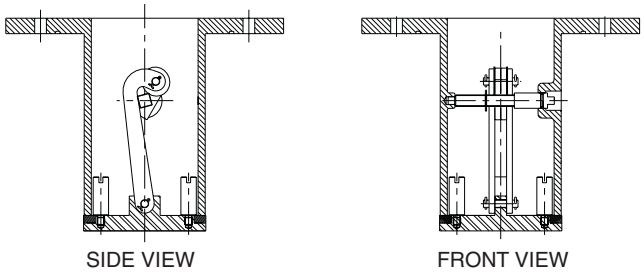

Fig. 30 — Suction Valve Detail

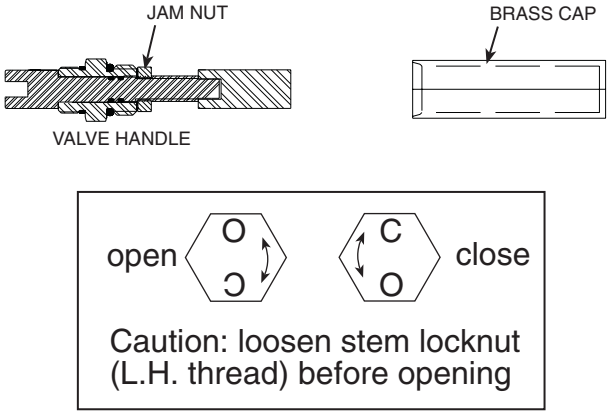

Fig. 31 — Suction Valve Handle Details

START-UP AND OPERATION

Actual Start-Up — *Actual start-up should be done only under supervision of a qualified refrigeration mechanic and qualified Carrier Comfort Network personnel.*

1. Set leaving fluid temperature. No cooling range adjustment is necessary.
2. Start chilled fluid pump and condenser pump (30HXC) if not controlled by unit.
3. Switch Enable/Off/Remote Contact switch to Enable or Remote Contact.
4. Provided there is a load on the chiller, allow the machine to operate and confirm that everything is functioning properly. Verify that the leaving fluid temperature agrees with the cooling set point (1 or 2), or if reset is being used, the modified set point. Chiller is controlling to the Control Point (item 'CTPT') displayed on the Navigator.

Operating Sequence — The chiller is started by switching the Enable/Off/Remote Contact switch to either Enable or Remote Contact position. If cooler pump control is enabled, the cooler pump is started. If condenser pump control (30HXC) is enabled, the condenser pump is started. On a command for cooling, the oil pump is turned on to start the prelubrication process. After 20 seconds, the oil solenoid is opened and the control reads the oil pressure from the transducer and determines if sufficient pressure has been built up. If there is not sufficient pressure, an alarm is generated after the second attempt and the compressor is not started.

Upon building pressure, the compressor is allowed to start (after 15 seconds). For across-the-line (XL) start chillers, the compressor starts and comes up to full speed within 1 to 3 seconds. For Wye-Delta start chillers, contactors 1M and S (starter contactor assembly) are closed and the compressor is started in a Wye configuration. This method reduces the locked rotor current requirements by approximately 60% while maintaining enough torque to bring the compressor up to full speed.

FIELD WIRING

Field wiring is shown in Fig. 32-47.

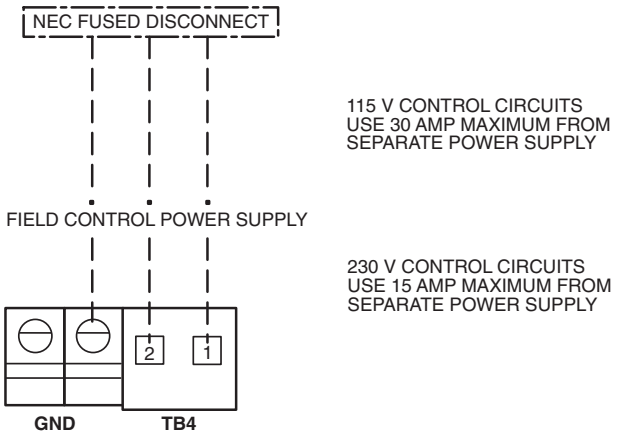

Fig. 32 — Power Supply Wiring

LEGEND FOR FIG. 32-47

ALM	—	Alarm
CFR	—	Condenser Fan Relay
CMP	—	Chiller Water Pump
CNFS	—	Condenser Flow Switch
CNPI	—	Condenser Pump Interlock
CNP-R	—	Condenser Pump Relay
CWP	—	Chilled Water Pump
EMM	—	Energy Management Module
EWT	—	Entering Water Thermistor
FIOP	—	Factory-Installed Option
FSR	—	Flow Switch Relay
FU	—	Fuse
GFI-CO	—	Ground Fault Interrupter Convenience Outlet
GND	—	Ground
LLSV	—	Liquid Line Solenoid Valve
LWT	—	Leaving Water Thermistor
MBB	—	Main Base Board
MLV	—	Minimum Load Valve
NEC	—	National Electrical Code
OAT	—	Outdoor-Air Thermistor
SCB	—	Screw Compressor Board
SPT	—	Space Temperature Sensor
SW	—	Switch
TB	—	Terminal Block
- - - -		Field-Wired
———		Factory Wired

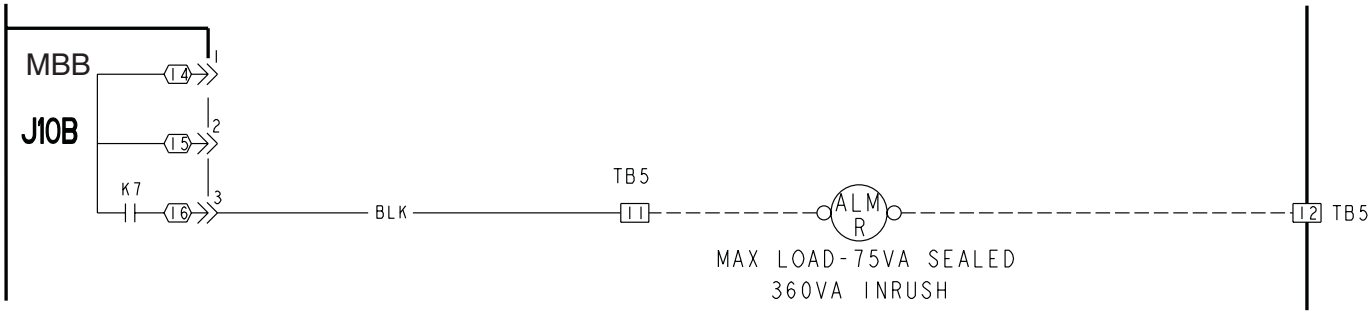

Fig. 33 — Remote Alarm Relay Accessory Wiring; All Models, 115, 230 V

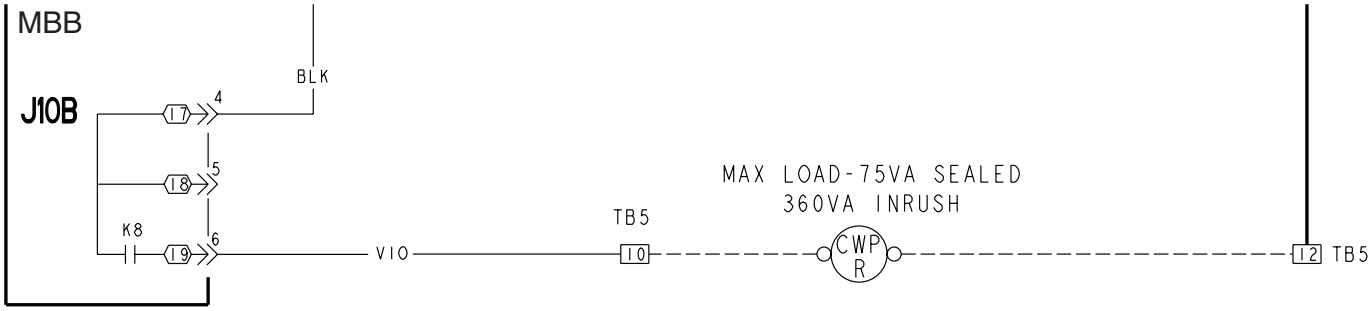

Fig. 34 — Chilled Water Pump Relay Wiring; All Models, 115, 230 V

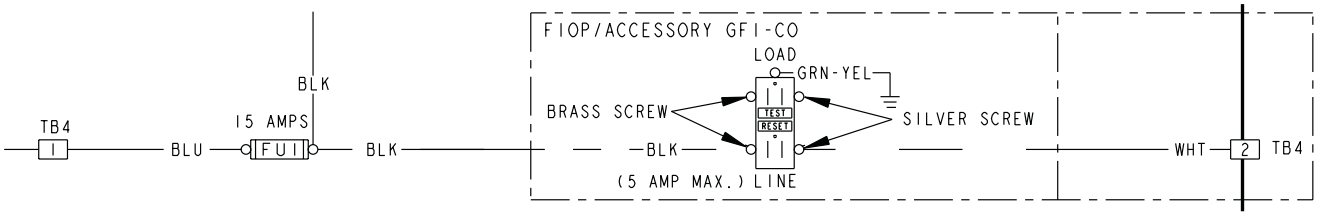

Fig. 35 — Optional Ground Fault Interrupter; Convenience Outlet Accessory Wiring

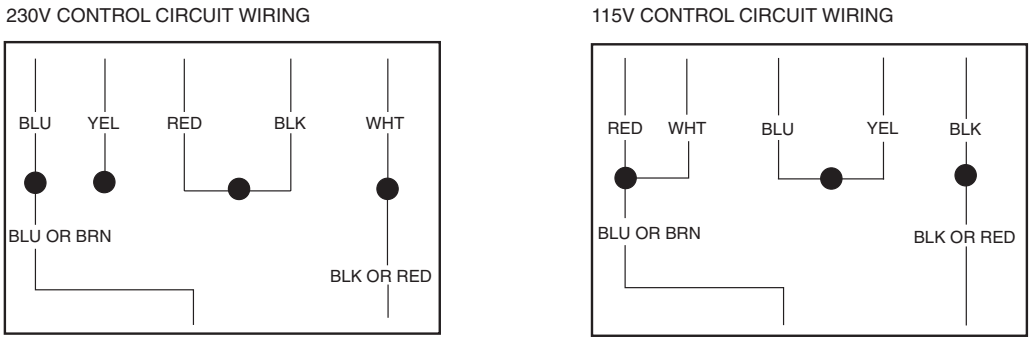

Fig. 36 — Oil Pump Motor Junction Box Wiring

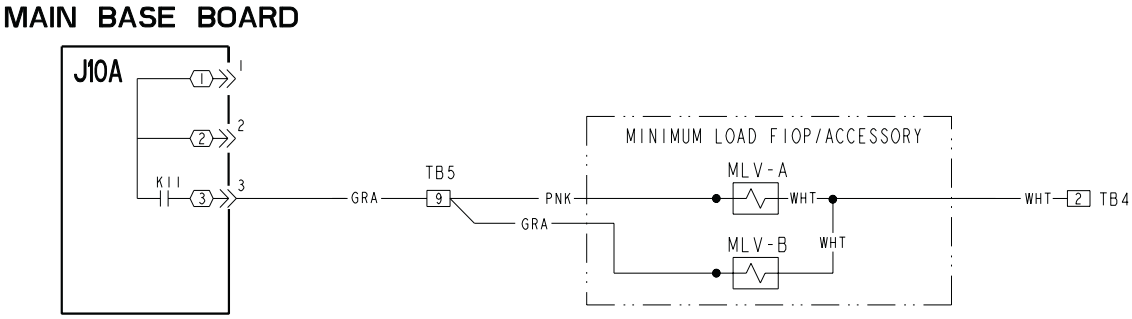

Fig. 37A — 30GXN,R Minimum Load Valve Accessory Wiring, 115, 230 V

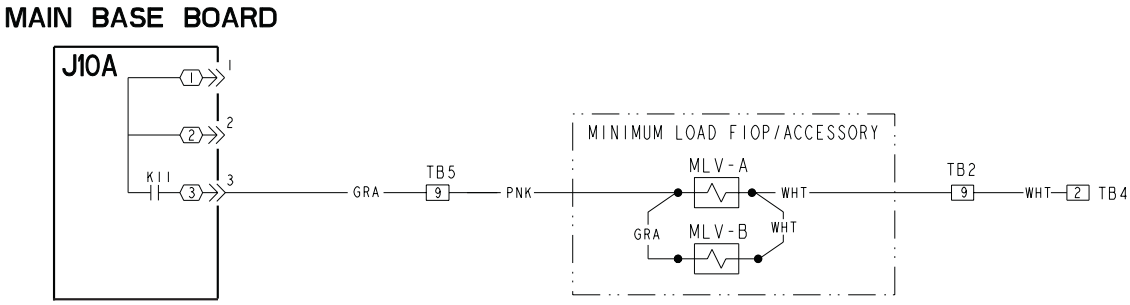

Fig. 37B — 30HX Minimum Load Valve Accessory Wiring, 115, 230 V

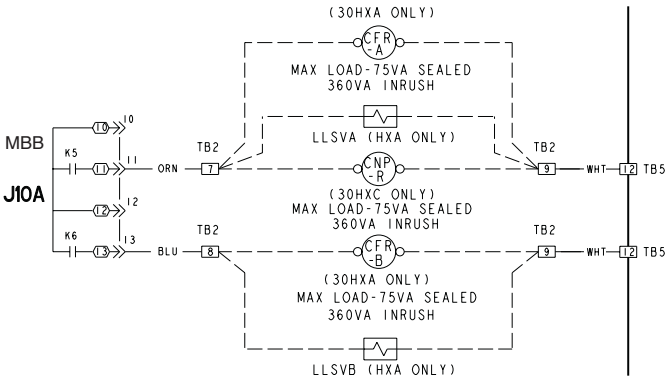

Fig. 38 — Condenser Pump Relay Wiring; 30HXC and Remote Condenser Fan/Liquid Line Solenoid Valve Wiring; 30HXA

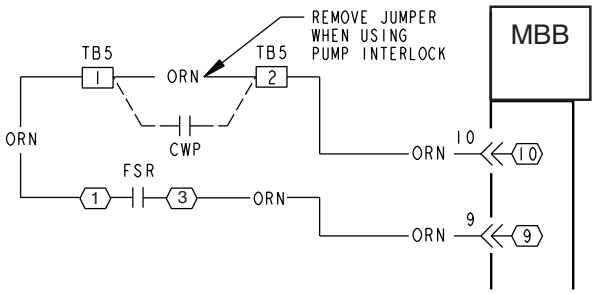

Fig. 39 — Chilled Water Interlock and Flow Switch Input Wiring

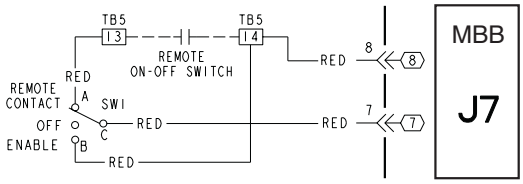

Fig. 40 — Remote On/Off Switch Input Wiring

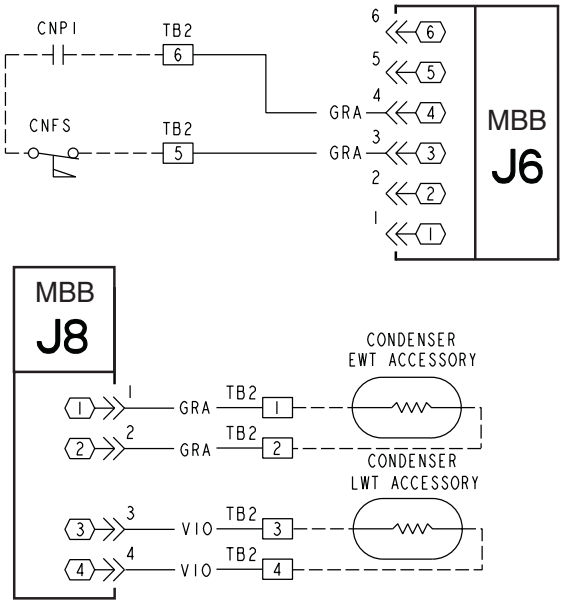

Fig. 41 — Condenser Flow Switch Interlock and Entering/Leaving Water Thermistor Wiring; 30HXC Units

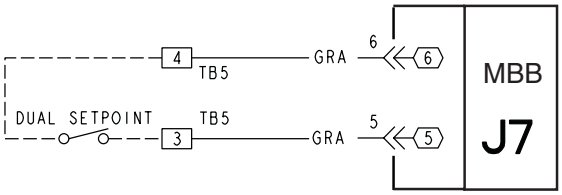

Fig. 42 — Remote Dual Setpoint Wiring; All Units

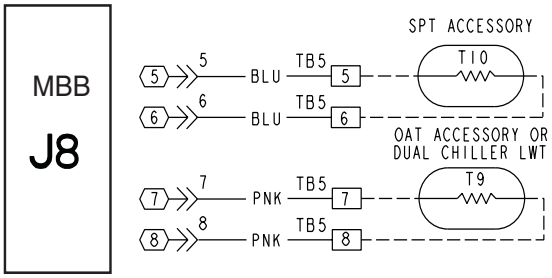

Fig. 43 — Outdoor-Air Thermistor (5KΩ at 77 F [25 C]) and Space Temperature Sensor (10KΩ at 77 F [25 C]) All Units, Field Supplied

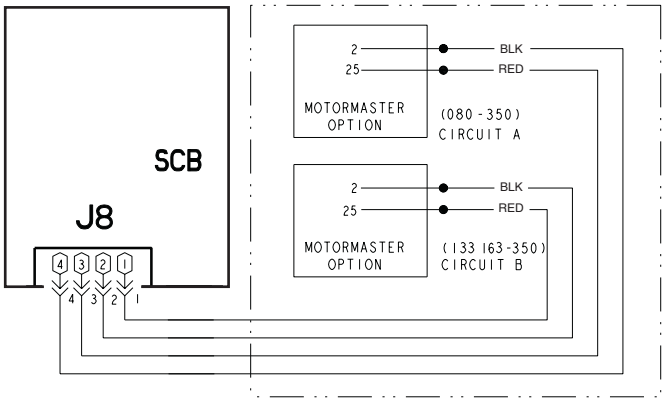

Fig. 44 — Motormaster® Option; 30GXN,R Units

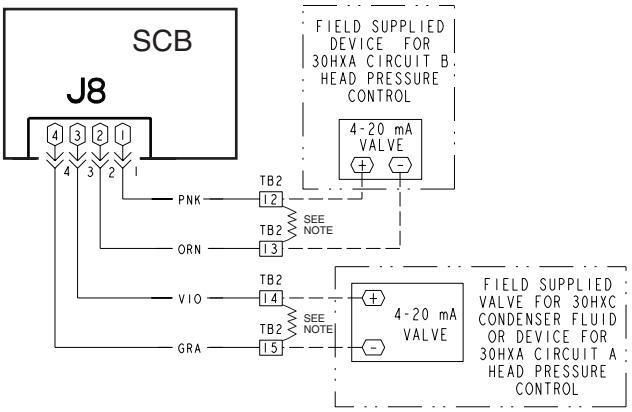

NOTE: Install a 500 Ω resistor across output terminals to convert output signal to 2-10 vdc.

Fig. 45 — Field-Supplied Head Pressure Device Wiring; 30HX Units

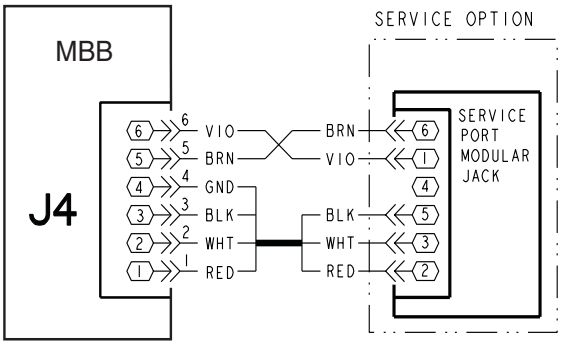

Fig. 46 — Service Port Option or Accessory Wiring; 30GX Units

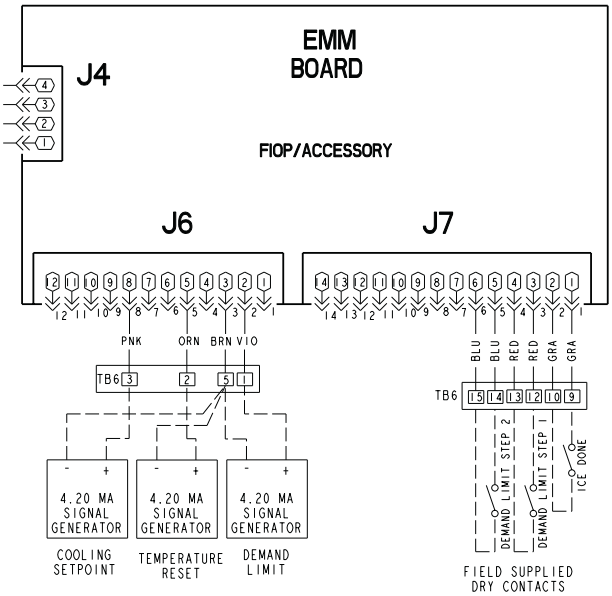

NOTE: Use signal converter for input types other than 4-20 mA.

Fig. 47 — Energy Management Module Option or Accessory Wiring; All Units

APPENDIX A

30GXN,R (High Ambient Data [Position 10 in model no. equal to ‘A’, ‘F’, ‘T’, or ‘V’], All Models)

*Comfort*Link™ Compressor Protection Module Configuration Header Punch-Outs and Must Trip Amps

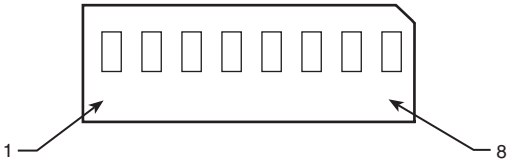

UNIT MODEL NUMBER	VOLTAGE	PUNCHOUTS FOR COMP A1	PUNCHOUTS FOR COMP A2	PUNCHOUTS FOR COMP B1	PUNCHOUTS FOR COMP B2	COMP A1 MUST TRIP AMPS SETTING	COMP A2 MUST TRIP AMPS SETTING	COMP B1 MUST TRIP AMPS SETTING	COMP B2 MUST TRIP AMPS SETTING
30GXN,R080	575-3-60	1,2,3,5,8	—	1,2,3,4,8	—	94	—	78	—
	380-3-60	1,2,4,8	—	1,2,4,5,6,8	—	142	—	118	—
	230-3-60	1,3,6	—	1,3,4,5	—	232	—	192	—
	208/230-3-60	1,4,6,7,8	—	1,3,5,6,8	—	258	—	214	—
	460-3-60	1,2,4,5,6,7	—	1,2,3,5	—	116	—	96	—
	230-3-50	1,4,5,6	—	1,3,4,8	—	248	—	206	—
	380/415-3-50	1,2,5,6,8	—	1,2,4,5,7	—	150	—	124	—
30GXN,R90 30GXN,R220B	575-3-60	1,2,4,5,6,7	—	1,2,3,4,8	—	116	—	78	—
	380-3-60	1,2	—	1,2,4,5,6,8	—	176	—	118	—
	230-3-60	1,5	—	1,3,4,5	—	288	—	192	—
	208/230-3-60	2,3,4,5,7,8	—	1,3,5,6,8	—	314	—	214	—
	460-3-60	1,2,4	—	1,2,3,5	—	144	—	96	—
	230-3-50	2,3,4,5,6,7	—	1,3,4,8	—	308	—	206	—
	380/415-3-50	1,3,4,5,7,8	—	1,2,4,5,7	—	186	—	124	—
30GXN,R106	575-3-60	1,2,4,7	—	1,2,3,4,8	—	140	—	78	—
	380-3-60	1,3,5,6,7	—	1,2,4,5,6,8	—	212	—	118	—
	230-3-60	2,3,5,7	—	1,3,4,5	—	348	—	192	—
	208/230-3-60	2,4,5	—	1,3,5,6,8	—	384	—	214	—
	460-3-60	1,2,8	—	1,2,3,5	—	174	—	96	—
	230-3-50	2,4,5,6,7	—	1,3,4,8	—	372	—	206	—
	380/415-3-50	1,3,5	—	1,2,4,5,7	—	224	—	124	—
30GXN,R114	575-3-60	1,2,4,7	—	1,2,3,5,8	—	140	—	94	—
	380-3-60	1,3,5,6,7	—	1,2,4,8	—	212	—	142	—
	230-3-60	2,3,5,7	—	1,3,6	—	348	—	232	—
	208/230-3-60	2,4,5	—	1,4,6,7,8	—	384	—	258	—
	460-3-60	1,2,8	—	1,2,4,5,6,7	—	174	—	116	—
30GXN,R115 30GXN,R240B	230-3-50	2,4,8	—	1,3,6,7	—	398	—	228	—
	380/415-3-50	1,3	—	1,2,4,7,8	—	240	—	138	—
30GXN,R125 30GXN,R220A, 240A	575-3-60	1,2,5,7,8	—	1,2,3,7	—	154	—	108	—
	380-3-60	1,3,7,8	—	1,2,6,7	—	234	—	164	—
	230-3-60	2,4,6,7	—	1,4,7	—	388	—	268	—
	208/230-3-60	2,7	—	1,7,8	—	428	—	298	—
	460-3-60	1,3,4,6,7,8	—	1,2,4,6,8	—	194	—	134	—
	230-3-50	2,4,8	—	1,5,6,7	—	398	—	276	—
	380/415-3-50	1,3	—	1,2,6,8	—	240	—	166	—
30GXN,R135 30GXN,R275A/B, 300B 30GXN,/R365B, 370B,395B	575-3-60	1,2,5,7,8	—	1,2,4,5	—	154	—	128	—
	380-3-60	1,3,7,8	—	1,3,4,6,7,8	—	234	—	194	—
	230-3-60	2,4,6,7	—	2,3,4,5	—	388	—	320	—
	208/230-3-60	2,7	—	2,3,6,7,8	—	428	—	354	—
	460-3-60	1,3,4,6,7,8	—	1,2,5	—	194	—	160	—
	230-3-50	2,4,8	—	2,3,4,6,7	—	398	—	324	—
	380/415-3-50	1,3	—	1,3,4,7,8	—	240	—	202	—
30GXN,R150 30GXN,R370B	575-3-60	1,2,4,5	—	1,3,4,5,7	—	128	—	188	—
	380-3-60	1,3,4,6,7,8	—	1,5,8	—	194	—	286	—
	230-3-60	2,3,4,5	—	3,5,6	—	320	—	472	—
	208/230-3-60	2,3,6,7,8	—	4,7,8	—	354	—	522	—
	460-3-60	1,2,5	—	1,3,7	—	160	—	236	—
	230-3-50	2,3,5,7	—	2,5,6,7	—	348	—	404	—
	380/415-3-50	1,3,5,6,7,8	—	1,4,5,6,8	—	210	—	246	—
30GXN,R160 30GXN,R300A, 320A/B 30GXN,R415B	575-3-60	1,2,5,7,8	—	1,3,4,5,7	—	154	—	188	—
	380-3-60	1,3,7,8	—	1,5,8	—	234	—	286	—
	230-3-60	2,4,6,7	—	3,5,6	—	388	—	472	—
	208/230-3-60	2,7	—	4,7,8	—	428	—	522	—
	460-3-60	1,3,4,6,7,8	—	1,3,7	—	194	—	236	—
	230-3-50	2,4,8	—	3,6	—	398	—	488	—
	380/415-3-50	1,3	—	1,6,8	—	240	—	294	—

APPENDIX A (cont)

30GXN,R (High Ambient Data [Position 10 in model no. equal to ‘A’, ‘F’, ‘T’, or ‘V’], All Models)

*Comfort*Link™ Compressor Protection Module Configuration Header Punch-Outs and Must Trip Amps

UNIT MODEL NUMBER	VOLTAGE	PUNCHOUTS FOR COMP A1	PUNCHOUTS FOR COMP A2	PUNCHOUTS FOR COMP B1	PUNCHOUTS FOR COMP B2	COMP A1 MUST TRIP AMPS SETTING	COMP A2 MUST TRIP AMPS SETTING	COMP B1 MUST TRIP AMPS SETTING	COMP B2 MUST TRIP AMPS SETTING
30GXN,R174	575-3-60	1,3,4,5,7	—	1,3,4,5,7	—	188	—	188	—
	380-3-60	1,5,8	—	1,5,8	—	286	—	286	—
	230-3-60	3,5,6	—	3,5,6	—	472	—	472	—
	208/230-3-60	4,7,8	—	4,7,8	—	522	—	522	—
	460-3-60	1,3,7	—	1,3,7	—	236	—	236	—
30GXN,R175 30GXN,R345A/B	230-3-50	3,6	—	3,6	—	488	—	488	—
	380/415-3-50	1,6,8	—	1,6,8	—	294	—	294	—
30GXN,R204	575-3-60	1,3,4,5,7	1,2,3,5,7,8	1,2,5,7,8	—	188	90	154	—
	380-3-60	1,5,8	1,2,4,6	1,3,7,8	—	286	136	234	—
	230-3-60	3,5,6	1,3,6,7	2,4,6,7	—	472	228	388	—
	208/230-3-60	4,7,8	1,4,5,7	2,7	—	522	252	428	—
	460-3-60	1,3,7	1,2,4,5,6,7,8	1,3,4,6,7,8	—	236	114	194	—
30GXN,R205 30GXN,R410B	230-3-50	2,4,8	1,3,6,7	3,6	—	398	228	488	—
	380/415-3-50	1,3	1,2,4,7,8	1,6,8	—	240	138	294	—
30GXN,R225 30GXN,R410A, 440A/B 30GXN,R450A/B	575-3-60	1,3,4,5,7	1,2,3,7	1,3,4,5,7	—	188	108	188	—
	380-3-60	1,5,8	1,2,6,7	1,5,8	—	286	164	286	—
	230-3-60	3,5,6	1,4,7	3,5,6	—	472	268	472	—
	208/230-3-60	4,7,8	1,7,8	4,7,8	—	522	298	522	—
	460-3-60	1,3,7	1,2,4,6,8	1,3,7	—	236	134	236	—
	230-3-50	3,6	1,5,6,7	3,6	—	488	276	488	—
	380/415-3-50	1,6,8	1,2,6,8	1,6,8	—	294	166	294	—
30GXN,R249 30GXN,R370A, 390A	575-3-60	1,3,4,5,7	1,3,4,5,7	1,2,5,7,8	—	188	188	154	—
	380-3-60	1,5,8	1,5,8	1,3,7,8	—	286	286	234	—
	230-3-60	3,5,6	3,5,6	2,4,6,7	—	472	472	388	—
	208/230-3-60	4,7,8	4,7,8	2,7	—	522	522	428	—
	460-3-60	1,3,7	1,3,7	1,3,4,6,7,8	—	236	236	194	—
30GXN,R250 30GXN,R365A	230-3-50	3,6	2,4,8	3,6	—	488	398	488	—
	380/415-3-50	1,6,8	1,3	1,6,8	—	294	240	294	—
30GXN,R264 30GXN,R395A, 415A	575-3-60	1,3,4,5,7	1,3,4,5,7	1,3,4,5,7	—	188	188	188	—
	380-3-60	1,5,8	1,5,8	1,5,8	—	286	286	286	—
	230-3-60	3,5,6	3,5,6	3,5,6	—	472	472	472	—
	208/230-3-60	4,7,8	4,7,8	4,7,8	—	522	522	522	—
	460-3-60	1,3,7	1,3,7	1,3,7	—	236	236	236	—
	230-3-50	3,6	3,6	3,6	—	488	488	488	—
	380/415-3-50	1,6,8	1,6,8	1,6,8	—	294	294	294	—
30GXN,R281	575-3-60	1,3,4,5,7	1,2,3,7	1,3,4,5,7	1,2,3,7	188	108	188	108
	380-3-60	1,5,8	1,2,6,7	1,5,8	1,2,6,7	286	164	286	164
	460-3-60	1,3,7	1,2,4,6,8	1,3,7	1,2,4,6,8	236	134	236	134
	380/415-3-50	1,6,8	1,2,6,8	1,6,8	1,2,6,8	294	166	294	166
30GXN,R301	575-3-60	1,3,4,5,7	1,2,4,5	1,3,4,5,7	1,2,4,5	188	128	188	128
	380-3-60	1,5,8	1,3,4,6,7,8	1,5,8	1,3,4,6,7,8	286	194	286	194
	460-3-60	1,3,7	1,2,5	1,3,7	1,2,5	236	160	236	160
	380/415-3-50	1,6,8	1,3,4,7,8	1,6,8	1,3,4,7,8	294	202	294	202
30GXN,R325	575-3-60	1,3,4,5,7	1,2,5,7,8	1,3,4,5,7	1,2,5,7,8	188	154	188	154
	380-3-60	1,5,8	1,3,7,8	1,5,8	1,3,7,8	286	234	286	234
	460-3-60	1,3,7	1,3,4,6,7,8	1,3,7	1,3,4,6,7,8	236	194	236	194
	380/415-3-50	1,6,8	1,3	1,6,8	1,3	294	240	294	240
30GXN,R350	575-3-60	1,3,4,5,7	1,3,4,5,7	1,3,4,5,7	1,3,4,5,7	188	188	188	188
	380-3-60	1,5,8	1,5,8	1,5,8	1,5,8	286	286	286	286
	460-3-60	1,3,7	1,3,7	1,3,7	1,3,7	236	236	236	236
	380/415-3-50	1,6,8	1,6,8	1,6,8	1,6,8	294	294	294	294

APPENDIX A (cont)

30GXN,R (Reduced Ambient Data [Position 10 in model no. equal to '-', 'E', 'S', or 'U'], Limited Models Only)

*Comfort*Link™ Compressor Protection Module Configuration Header Punch-Outs and Must Trip Amps

UNIT MODEL NUMBER	VOLTAGE	PUNCHOUTS FOR COMP A1	PUNCHOUTS FOR COMP A2	PUNCHOUTS FOR COMP B1	PUNCHOUTS FOR COMP B2	COMP A1 MUST TRIP AMPS SETTING	COMP A2 MUST TRIP AMPS SETTING	COMP B1 MUST TRIP AMPS SETTING	COMP B2 MUST TRIP AMPS SETTING
30GXN,R080	575-3-60	1,2,3,5,6	—	1,2,3,4,7,8	—	88	—	74	—
	380-3-60	1,2,4,6,8	—	1,2,3	—	134	—	112	—
	230-3-60	1,3,5,7	—	1,3,4,5,6	—	220	—	184	—
	208/230-3-60	1,4,5,6,7	—	1,3,4,7	—	244	—	204	—
	460-3-60	1,2,3,8	—	1,2,3,5,7	—	110	—	92	—
	230-3-50	1,3,8	—	1,3,4,6	—	238	—	200	—
	380/415-3-50	1,2,4	—	1,2,4,5,6	—	144	—	120	—
30GXN,R90 30GXN,R220B	575-3-60	1,2,3	—	1,2,3,4,7,8	—	112	—	74	—
	380-3-60	1,2,6	—	1,2,3	—	168	—	112	—
	230-3-60	1,5,6,7	—	1,3,4,5,6	—	276	—	184	—
	208/230-3-60	2,3,4,5,6,7,8	—	1,3,4,7	—	306	—	204	—
	460-3-60	1,2,4,7,8	—	1,2,3,5,7	—	138	—	92	—
	230-3-50	1,6,8	—	1,3,4,6	—	294	—	200	—
	380/415-3-50	1,3,4,5,6,7,8	—	1,2,4,5,6	—	178	—	120	—
30GXN,R106	575-3-60	1,2,4,7,8	—	1,2,3,4,7,8	—	138	—	74	—
	380-3-60	1,3,5,6,7,8	—	1,2,3	—	210	—	112	—
	230-3-60	2,3,5,6	—	1,3,4,5,6	—	344	—	184	—
	208/230-3-60	2,4,5,8	—	1,3,4,7	—	382	—	204	—
	460-3-60	1,2,7	—	1,2,3,5,7	—	172	—	92	—
	230-3-50	2,3	—	1,3,4,6	—	368	—	200	—
	380/415-3-50	1,3,5,8	—	1,2,4,5,6	—	222	—	120	—
30GXN,R114	575-3-60	1,2,4,7,8	—	1,2,3,5,6	—	138	—	88	—
	380-3-60	1,3,5,6,7,8	—	1,2,4,6,8	—	210	—	134	—
	230-3-60	2,3,5,6	—	1,3,5,7	—	344	—	220	—
	208/230-3-60	2,4,5,8	—	1,4,5,6,7	—	382	—	244	—
	460-3-60	1,2,7	—	1,2,3,8	—	172	—	110	—
30GXN,R115 30GXN,R240B	230-3-50	2,4,8	—	1,3,5,8	—	398	—	222	—
	380/415-3-50	1,3	—	1,2,4,6,8	—	240	—	134	—
30GXN,R125 30GXN,R220A, 240A	575-3-60	1,2,5,7,8	—	1,2,3,7,8	—	154	—	106	—
	380-3-60	1,3,7,8	—	1,2,6,7,8	—	234	—	162	—
	230-3-60	2,4,6,7	—	1,4,6	—	388	—	264	—
	208/230-3-60	2,7	—	1,6,8	—	428	—	294	—
	460-3-60	1,3,4,6,7,8	—	1,2,4,6,7	—	194	—	132	—
	230-3-50	2,4,8	—	1,4	—	398	—	272	—
	380/415-3-50	1,3	—	1,2,6,7	—	240	—	164	—

APPENDIX A (cont)

30HXC Models

*Comfort*Link™ Compressor Protection Module Configuration Header Punch-Outs and Must Trip Amps

UNIT MODEL NUMBER	VOLTAGE	PUNCHOUTS FOR COMP A1	PUNCHOUTS FOR COMP A2	PUNCHOUTS FOR COMP B1	COMP A1 MUST TRIP AMPS SETTING	COMP A2 MUST TRIP AMPS SETTING	COMP B1 MUST TRIP AMPS SETTING
30HXC076	575-3-60	1,2,3,4,5,6,8	—	1,2,3,4,5,6,8	54	—	54
	380-3-60	1,2,3,5,6,7,8	—	1,2,3,5,6,7,8	82	—	82
	230-3-60	1,2,4,6	—	1,2,4,6	136	—	136
	208/230-3-60	1,2,5,6	—	1,2,5,6	152	—	152
	460-3-60	1,2,3,4,6,7	—	1,2,3,4,6,7	68	—	68
	230-3-50	1,2,4,8	—	1,2,4,8	142	—	142
	380/415-3-50	1,2,3,5,6,8	—	1,2,3,5,6,8	86	—	86
30HXC086	575-3-60	1,2,3,4,6,7,8	—	1,2,3,4,5,6,8	66	—	54
	380-3-60	1,2,3,6,7	—	1,2,3,5,6,7,8	100	—	82
	230-3-60	1,2,6,8	—	1,2,4,6	166	—	136
	208/230-3-60	1,3,4,5,6	—	1,2,5,6	184	—	152
	460-3-60	1,2,3,5,6,7,8	—	1,2,3,4,6,7	82	—	68
	230-3-50	1,2,8	—	1,2,4,8	174	—	142
	380/415-3-50	1,2,3,6	—	1,2,3,5,6,8	104	—	86
30HXC096	575-3-60	1,2,3,4	—	1,2,3,4,5,6,8	80	—	54
	380-3-60	1,2,4,5,7,8	—	1,2,3,5,6,7,8	122	—	82
	230-3-60	1,3,4,7,8	—	1,2,4,6	202	—	136
	208/230-3-60	1,3,5	—	1,2,5,6	224	—	152
	460-3-60	1,2,3,6,8	—	1,2,3,4,6,7	102	—	68
	230-3-50	1,3,5,6,7,8	—	1,2,4,8	210	—	142
	380/415-3-50	1,2,4,5,8	—	1,2,3,5,6,8	126	—	86
30HXC106	575-3-60	1,2,3,6,7,8	—	1,2,3,4,5,6,8	98	—	54
	380-3-60	1,2,5,6,7	—	1,2,3,5,6,7,8	148	—	82
	230-3-60	1,4,5,6,8	—	1,2,4,6	246	—	136
	208/230-3-60	1,4	—	1,2,5,6	272	—	152
	460-3-60	1,2,4,5,7,8	—	1,2,3,4,6,7	122	—	68
	230-3-50	1,4,5,7	—	1,2,4,8	252	—	142
	380/415-3-50	1,2,5,6	—	1,2,3,5,6,8	152	—	86
30HXC116	575-3-60	1,2,3,6,7,8	—	1,2,3,4,6,7,8	98	—	66
	380-3-60	1,2,5,6,7	—	1,2,3,6,7	148	—	100
	230-3-60	1,4,5,6,8	—	1,2,6,8	246	—	166
	208/230-3-60	1,4	—	1,3,4,5,6	272	—	184
	460-3-60	1,2,4,5,7,8	—	1,2,3,5,6,7,8	122	—	82
	230-3-50	1,4,5,7	—	1,2,8	252	—	174
	380/415-3-50	1,2,5,6	—	1,2,3,6	152	—	104
30HXC126	575-3-60	1,2,3,6,7,8	—	1,2,3,4	98	—	80
	380-3-60	1,2,5,6,7	—	1,2,4,5,7,8	148	—	122
	230-3-60	1,4,5,6,8	—	1,3,4,7,8	246	—	202
	208/230-3-60	1,4	—	1,3,5	272	—	224
	460-3-60	1,2,4,5,7,8	—	1,2,3,6,8	122	—	102
	230-3-50	1,4,5,7	—	1,3,5,6,7,8	252	—	210
	380/415-3-50	1,2,5,6	—	1,2,4,5,8	152	—	126
30HXC136	575-3-60	1,2,4,5,6,8	—	1,2,3,4	118	—	80
	380-3-60	1,3,4,5,6,7,8	—	1,2,4,5,7,8	178	—	122
	230-3-60	1,6,8	—	1,3,4,7,8	294	—	202
	208/230-3-60	2,3,4,6,8	—	1,3,5	326	—	224
	460-3-60	1,2,5,6,7,8	—	1,2,3,6,8	146	—	102
	230-3-50	2,3,4,5,6,7,8	—	1,3,5,6,7,8	306	—	210
	380/415-3-50	1,3,4,5,6	—	1,2,4,5,8	184	—	126
30HXC146	575-3-60	1,2,4,5,6,8	—	1,2,3,6,7,8	118	—	98
	380-3-60	1,3,4,5,6,7,8	—	1,2,5,6,7	178	—	148
	230-3-60	1,6,8	—	1,4,5,6,7	294	—	244
	208/230-3-60	2,3,4,6,8	—	1,4	326	—	272
	460-3-60	1,2,5,6,7,8	—	1,2,4,5,7,8	146	—	122
	230-3-50	2,3,4,5,6,7,8	—	1,4,5,7	306	—	252
	380/415-3-50	1,3,4,5,6	—	1,2,5,6	184	—	152

APPENDIX A (cont)

30HXC Models

*Comfort*Link™ Compressor Protection Module Configuration Header Punch-Outs and Must Trip Amps

UNIT MODEL NUMBER	VOLTAGE	PUNCHOUTS FOR COMP A1	PUNCHOUTS FOR COMP A2	PUNCHOUTS FOR COMP B1	COMP A1 MUST TRIP AMPS SETTING	COMP A2 MUST TRIP AMPS SETTING	COMP B1 MUST TRIP AMPS SETTING
30HXC161	575-3-60	1,2,4,5	—	1,2,3,5,6	128	—	88
	380-3-60	1,3,4,6,7,8	—	1,2,4,6,8	194	—	134
	230-3-60	2,3,4,5	—	1,3,5,7	320	—	220
	208/230-3-60	2,3,6,7	—	1,4,5,6,7	356	—	244
	460-3-60	1,2,5	—	1,2,3,8	160	—	110
	230-3-50	2,3,4,7,8	—	1,3,6,7,8	330	—	226
	380/415-3-50	1,3,4,6	—	1,2,4,6	200	—	136
30HXC171	575-3-60	1,2,3,7,8	—	1,2,4,5	106	—	128
	380-3-60	1,2,6,7,8	—	1,3,4,6,7,8	162	—	194
	230-3-60	1,4,7,8	—	2,3,4,5	266	—	320
	208/230-3-60	1,6	—	2,3,6,7	296	—	356
	460-3-60	1,2,4,6,8	—	1,2,5	134	—	160
	230-3-50	1,4	—	2,3,4,7,8	272	—	330
	380/415-3-50	1,2,6,7	—	1,3,4,6	164	—	200
30HXC186	575-3-60	1,2,4,5	—	1,2,4,5	128	—	128
	380-3-60	1,3,4,6,7,8	—	1,3,4,6,7,8	194	—	194
	230-3-60	2,3,4,5	—	2,3,4,5	320	—	320
	208/230-3-60	2,3,6,7	—	2,3,6,7	356	—	356
	460-3-60	1,2,5	—	1,2,5	160	—	160
	230-3-50	2,3,4,7,8	—	2,3,4,7,8	330	—	330
	380/415-3-50	1,3,4,6	—	1,3,4,6	200	—	200
30HXC206	575-3-60	1,2,3,7,8	1,2,3,4,5,7	1,2,4,5	106	60	128
	380-3-60	1,2,6,7,8	1,2,3,5,7,8	1,3,4,6,7,8	162	90	194
	230-3-60	1,4,7,8	1,2,5,6,8	2,3,4,5	266	150	320
	208/230-3-60	1,6	1,2,6,8	2,3,6,7	296	166	356
	460-3-60	1,2,4,6,8	1,2,3,4,7,8	1,2,5	134	74	160
	230-3-50	1,4	1,2,5,7,8	2,3,4,7,8	272	154	330
	380/415-3-50	1,2,6,7	1,2,3,5,7	1,3,4,6	164	92	200
30HXC246	575-3-60	1,2,4,5	1,2,3,5,6	1,2,4,5	128	88	128
	380-3-60	1,3,4,6,7,8	1,2,4,6,8	1,3,4,6,7,8	194	134	194
	230-3-60	2,3,4,5	1,3,5,7	2,3,4,5	320	220	320
	208/230-3-60	2,3,6,7	1,4,5,6,7	2,3,6,7	356	244	356
	460-3-60	1,2,5	1,2,3,8	1,2,5	160	110	160
	230-3-50	2,3,4,7,8	1,3,6,7,8	2,3,4,7,8	330	226	330
	380/415-3-50	1,3,4,6	1,2,4,6	1,3,4,6	200	136	200
30HXC261	575-3-60	1,2,4,5	1,2,3,7,8	1,2,4,5	128	106	128
	380-3-60	1,3,4,6,7,8	1,2,6,7,8	1,3,4,6,7,8	194	162	194
	230-3-60	2,3,4,5	1,4,7,8	2,3,4,5	320	266	320
	208/230-3-60	2,3,6,7	1,6	2,3,6,7	356	296	356
	460-3-60	1,2,5	1,2,4,6,8	1,2,5	160	134	160
	230-3-50	2,3,4,7,8	1,4	2,3,4,7,8	330	272	330
	380/415-3-50	1,3,4,6	1,2,6,7	1,3,4,6	200	164	200
30HXC271	575-3-60	1,2,4,5	1,2,4,5	1,2,4,5	128	128	128
	380-3-60	1,3,4,6,7,8	1,3,4,6,7,8	1,3,4,6,7,8	194	194	194
	230-3-60	2,3,4,5	2,3,4,5	2,3,4,5	320	320	320
	208/230-3-60	2,3,6,7	2,3,6,7	2,3,6,7	356	356	356
	460-3-60	1,2,5	1,2,5	1,2,5	160	160	160
	230-3-50	2,3,4,7,8	2,3,4,7,8	2,3,4,7,8	330	330	330
	380/415-3-50	1,3,4,6	1,3,4,6	1,3,4,6	200	200	200

APPENDIX A (cont)

30HXA Models

*Comfort*Link™ Compressor Protection Module Configuration Header Punch-Outs and Must Trip Amps

UNIT MODEL NUMBER	VOLTAGE	PUNCHOUTS FOR COMP A1	PUNCHOUTS FOR COMP A2	PUNCHOUTS FOR COMP B1	COMP A1 MUST TRIP AMPS SETTING	COMP A2 MUST TRIP AMPS SETTING	COMP B1 MUST TRIP AMPS SETTING
30HXA076	575-3-60	1,2,3,4	—	1,2,3,4	80	—	80
	380-3-60	1,2,4,5,7,8	—	1,2,4,5,7,8	122	—	122
	230-3-60	1,3,4,7,8	—	1,3,4,7,8	202	—	202
	208/230-3-60	1,3,5	—	1,3,5	224	—	224
	460-3-60	1,2,3,6,7	—	1,2,3,6,7	100	—	100
	230-3-50	1,3,5,6,7,8	—	1,3,5,6,7,8	210	—	210
	380/415-3-50	1,2,4,5,8	—	1,2,4,5,8	126	—	126
30HXA086	575-3-60	1,2,3,5	—	1,2,3,4	96	—	80
	380-3-60	1,2,5,6,7,8	—	1,2,4,5,7,8	146	—	122
	230-3-60	1,4,5,6,7,8	—	1,3,4,7,8	242	—	202
	208/230-3-60	1,4,7	—	1,3,5	268	—	224
	460-3-60	1,2,4,5,6	—	1,2,3,6,7	120	—	100
	230-3-50	1,4,5,8	—	1,3,5,6,7,8	254	—	210
	380/415-3-50	1,2,5,7,8	—	1,2,4,5,8	154	—	126
30HXA096	575-3-60	1,2,4,5,6,8	—	1,2,3,4	118	—	80
	380-3-60	1,3,4,5,6,7,8	—	1,2,4,5,7,8	178	—	122
	230-3-60	1,6,8	—	1,3,4,7,8	294	—	202
	208/230-3-60	2,3,4,6,8	—	1,3,5	326	—	224
	460-3-60	1,2,5,6,7,8	—	1,2,3,6,7	146	—	100
	230-3-50	2,3,4,5,6,7	—	1,3,5,6,7,8	308	—	210
	380/415-3-50	1,3,4,5,7,8	—	1,2,4,5,8	186	—	126
30HXA106	575-3-60	1,2,4,8	—	1,2,3,4	142	—	80
	380-3-60	1,3,5,6	—	1,2,4,5,7,8	216	—	122
	230-3-60	2,3,6,8	—	1,3,4,7,8	358	—	202
	208/230-3-60	2,4,8	—	1,3,5	398	—	224
	460-3-60	1,3,4,5,6,7,8	—	1,2,3,6,7	178	—	100
	230-3-50	2,4,5,6,8	—	1,3,5,6,7,8	374	—	210
	380/415-3-50	1,3,6,7,8	—	1,2,4,5,8	226	—	126
30HXA116	575-3-60	1,2,4,8	—	1,2,3,5	142	—	96
	380-3-60	1,3,5,6	—	1,2,5,6,7,8	216	—	146
	230-3-60	2,3,6,8	—	1,4,5,6,7,8	358	—	242
	208/230-3-60	2,4,8	—	1,4,7	398	—	268
	460-3-60	1,3,4,5,6,7,8	—	1,2,4,5,6	178	—	120
	230-3-50	2,4,5,6,8	—	1,4,5,8	374	—	254
	380/415-3-50	1,3,6,7,8	—	1,2,5,7,8	226	—	154
30HXA126	575-3-60	1,2,4,8	—	1,2,4,5,6,8	142	—	118
	380-3-60	1,3,5,6	—	1,3,4,5,6,7,8	216	—	178
	230-3-60	2,3,6,8	—	1,6,8	358	—	294
	208/230-3-60	2,4,8	—	2,3,4,6,8	398	—	326
	460-3-60	1,3,4,5,6,7,8	—	1,2,5,6,7,8	178	—	146
	230-3-50	2,4,5,6,8	—	2,3,4,5,6,7	374	—	308
	380/415-3-50	1,3,6,7,8	—	1,3,4,5,7,8	226	—	186
30HXA136	575-3-60	1,2,8	—	1,2,4,5,6,8	174	—	118
	380-3-60	1,4,6	—	1,3,4,5,6,7,8	264	—	178
	230-3-60	3,4,5,6,7	—	1,6,8	436	—	294
	208/230-3-60	3,6,7	—	2,3,4,6,8	484	—	326
	460-3-60	1,3,5,7,8	—	1,2,5,6,7,8	218	—	146
	230-3-50	3,4,7	—	2,3,4,5,6,7	460	—	308
	380/415-3-50	1,5,6,8	—	1,3,4,5,7,8	278	—	186
30HXA146	575-3-60	1,2,8	—	1,2,4,8	174	—	142
	380-3-60	1,4,6	—	1,3,5,6	264	—	216
	230-3-60	3,4,5,6,7	—	2,3,6,8	436	—	358
	208/230-3-60	3,6,7	—	2,4,8	484	—	398
	460-3-60	1,3,5,7,8	—	1,3,4,5,6,7,8	218	—	178
	230-3-50	3,4,7	—	2,4,5,6,8	460	—	374
	380/415-3-50	1,5,6,8	—	1,3,6,7,8	278	—	226

APPENDIX A (cont)

30HXA Models

*Comfort*Link™ Compressor Protection Module Configuration Header Punch-Outs and Must Trip Amps

UNIT MODEL NUMBER	VOLTAGE	PUNCHOUTS FOR COMP A1	PUNCHOUTS FOR COMP A2	PUNCHOUTS FOR COMP B1	COMP A1 MUST TRIP AMPS SETTING	COMP A2 MUST TRIP AMPS SETTING	COMP B1 MUST TRIP AMP SETTING
30HXA161	575-3-60	1,3,4,6,7	—	1,2,4,6,7	196	—	132
	380-3-60	1,7,8	—	1,3,4,6	298	—	200
	230-3-60	3,7,8	—	2,3,4,7,8	490	—	330
	208/230-3-60	5	—	2,3,8	544	—	366
	460-3-60	1,4,5,6,8	—	1,2,6,8	246	—	166
	230-3-50	4,6,8	—	2,3,5,6,8	518	—	342
	380/415-3-50	2,3,4,5,6	—	1,3,4,8	312	—	206
30HXA171	575-3-60	1,2,5	—	1,3,4,6,7	160	—	196
	380-3-60	1,4,5,6,7	—	1,7,8	244	—	298
	230-3-60	2,5,6,7,8	—	3,7,8	402	—	490
	208/230-3-60	3,4,5,8	—	5	446	—	544
	460-3-60	1,3,4,7,8	—	1,4,5,6,8	202	—	246
	230-3-50	2,5	—	4,6,8	416	—	518
	380/415-3-50	1,4,5,7	—	2,3,4,5,6	252	—	312
30HXA186	575-3-60	1,3,4,6,7	—	1,3,4,6,7	196	—	196
	380-3-60	1,7,8	—	1,7,8	298	—	298
	230-3-60	3,7,8	—	3,7,8	490	—	490
	208/230-3-60	5	—	5	544	—	544
	460-3-60	1,4,5,6,8	—	1,4,5,6,8	246	—	246
	230-3-50	4,6,8	—	4,6,8	518	—	518
	380/415-3-50	2,3,4,5,6	—	2,3,4,5,6	312	—	312
30HXA206	575-3-60	1,2,5	1,2,3,5,7,8	1,3,4,6,7	160	90	196
	380-3-60	1,4,5,6,7	1,2,4,6	1,7,8	244	136	298
	230-3-60	2,5,6,7,8	1,3,6,7,8	3,7,8	402	226	490
	208/230-3-60	3,4,5,8	1,4,5,7	5	446	252	544
	460-3-60	1,3,4,7,8	1,2,4,5,6,7,8	1,4,5,6,8	202	114	246
	230-3-50	2,5	1,3,7	4,6,8	416	236	518
	380/415-3-50	1,4,5,7	1,2,4,8	2,3,4,5,6	252	142	312
30HXA246	575-3-60	1,3,4,6,7	1,2,4,6,7	1,3,4,6,7	196	132	196
	380-3-60	1,7,8	1,3,4,6	1,7,8	298	200	298
	230-3-60	3,7,8	2,3,4,7,8	3,7,8	490	330	490
	208/230-3-60	5	2,3,8	5	544	366	544
	460-3-60	1,4,5,6,8	1,2,6,8	1,4,5,6,8	246	166	246
	230-3-50	4,6,8	2,3,5,6,8	4,6,8	518	342	518
	380/415-3-50	2,3,4,5,6	1,3,4,8	2,3,4,5,6	312	206	312
30HXA261	575-3-60	1,3,4,6,7	1,2,5	1,3,4,6,7	196	160	196
	380-3-60	1,7,8	1,4,5,6,7	1,7,8	298	244	298
	230-3-60	3,7,8	2,5,6,7,8	3,7,8	490	402	490
	208/230-3-60	5	3,4,5,8	5	544	446	544
	460-3-60	1,4,5,6,8	1,3,4,7,8	1,4,5,6,8	246	202	246
	230-3-50	4,6,8	2,5	4,6,8	518	416	518
	380/415-3-50	2,3,4,5,6	1,4,5,7	2,3,4,5,6	312	252	312
30HXA271	575-3-60	1,3,4,6,7	1,3,4,6,7	1,3,4,6,7	196	196	196
	380-3-60	1,7,8	1,7,8	1,7,8	298	298	298
	230-3-60	3,7,8	3,7,8	3,7,8	490	490	490
	208/230-3-60	5	5	5	544	544	544
	460-3-60	1,4,5,6,8	1,4,5,6,8	1,4,5,6,8	246	246	246
	230-3-50	4,6,8	4,6,8	4,6,8	518	518	518
	380/415-3-50	2,3,4,5,6	2,3,4,5,6	2,3,4,5,6	312	312	312

Capacity Loading Sequence Example — The following tables show the loading sequence for a 30HX186 (50/50 split) and a 30HX161 (59/41 split) chiller. Each compressor has 2 loaders. There is no difference in operation between "Staged" and "Equal" circuit loading on 2 compressor chillers.

STANDARD LOADING SEQUENCE (CIRCUIT A LEAD CIRCUIT, 2-COMPRESSOR UNIT)

STAGE	COMP A1	LOADER A1	LOADER A2	COMP B1	LOADER B1	LOADER B2	% TOTAL CAPACITY (50/50 Split)	% TOTAL CAPACITY (59/41 Split)
0	0	0	0	0	0	0	0.0	0.0
1	1	0	0	0	0	0	20.0	23.5
2	1	1	0	0	0	0	35.0	41.1
3	1	1	1	0	0	0	50.0	58.8
4	1	1	0	1	1	0	70.0	70.0
5	1	1	0	1	1	1	85.0	82.4
6	1	1	1	1	1	1	100.0	100.0

CLOSE CONTROL LOADING SEQUENCE (CIRCUIT A LEAD CIRCUIT, 2-COMPRESSOR UNIT)

STAGE	COMP A1	LOADER A1	LOADER A2	COMP B1	LOADER B1	LOADER B2	% TOTAL CAPACITY (50/50 Split)	% TOTAL CAPACITY (59/41 Split)
0	0	0	0	0	0	0	0.0	0.0
1	1	0	0	0	0	0	20.0	23.5
2	1	1	0	0	0	0	35.0	41.1
3	1	1	1	0	0	0	50.0	58.8
3A	1	0	0	1	0	0	40.0	40.0
3B	1	0	0	1	1	0	55.0	52.4
4	1	0	0	1	1	1	70.0	64.7
5	1	1	0	1	1	1	85.0	82.4
6	1	1	1	1	1	1	100.0	100.0

LEGEND

0 — Off
1 — On

NOTES:

1. Stage 3A (and 3B for 59/41 split) is not used by the algorithm when increasing stages. Stage 3 (and 2 for a 59/41 split) is not used when decreasing stages.
2. The% Total Capacities above are calculated based on compressor nominal tons. For the case of the 59/41 split above, the 30HX uses compressors with flow rates of 250 and 174 cfm (from compressor model numbers 06N__**250** and 06N__**174**), which represent nominal tons of 80 and 56 (respectively) at 60 Hz. A factor of 40% is used when no loaders are energized, and a factor of 70% is used when Loader 1 is energized. The capacity shown for Stage 3B above is calculated as follows:

   % Total Capacity=[(0.40 x 80 + 0.70 x 56)/(80 + 56)] x 100%
   = 52.4 %

Nominal Tons

COMPRESSOR PART NO.	60 Hz NOM. TONS	50 Hz NOM. TONS
06N__123	39	—
06N__146	46	39
06N__174	56	46
06N__209	66	56
06N__250	80	66
06N__300	—	80

The following tables show the loading sequence for 30HX206 (57/43 split) and 30HX271 (67/33 split) chillers. All compressors have two loaders and the chillers are configured for *equal circuit loading*. See Note 2.

STANDARD LOADING SEQUENCE (CIRCUIT A LEAD CIRCUIT, 3-COMPRESSOR UNIT)

STAGE	COMP A1	LOADER A1	LOADER A2	COMP A2	COMP B1	LOADER B1	LOADER B2	% TOTAL CAPACITY (57/43 Split)	% TOTAL CAPACITY (67/33 Split)
0	0	0	0	0	0	0	0	0.0	0.0
1	1	0	0	0	0	0	0	14.3	13.3
2	1	1	0	0	0	0	0	25.0	23.3
3	1	1	1	0	0	0	0	35.7	33.3
4	1	1	0	0	1	1	0	55.2	46.7
5	1	1	0	0	1	1	1	68.2	56.7
6	1	1	1	0	1	1	1	78.9	66.7
7	1	1	0	1	1	1	1	83.0	80.0
8	1	1	1	1	1	1	1	100.0	100.0

CLOSE CONTROL LOADING SEQUENCE (CIRCUIT A LEAD CIRCUIT, 3-COMPRESSOR UNIT)

STAGE	COMP A1	LOADER A1	LOADER A2	COMP A2	COMP B1	LOADER B1	LOADER B2	% TOTAL CAPACITY (57/43 Split)	% TOTAL CAPACITY (67/33 Split)
0	0	0	0	0	0	0	0	0.0	0.0
1	1	0	0	0	0	0	0	14.3	13.3
2	1	1	0	0	0	0	0	25.0	23.3
3	1	1	1	0	0	0	0	35.7	33.3
3A	1	0	0	0	1	0	0	31.6	26.7
4	1	0	0	0	1	1	0	44.5	36.7
5	1	0	0	0	1	1	1	57.5	46.7
6	1	1	0	0	1	1	1	68.2	56.7
7	1	1	1	0	1	1	1	78.9	66.7
7A	1	0	0	1	1	1	1	65.9	60.0
8	1	1	0	1	1	1	1	83.0	80.0
9	1	1	1	1	1	1	1	100.0	100.0

LEGEND

0 — Off
1 — On

NOTES:
1. Stages 3A and 7A are not used by the algorithm when increasing stages. Stages 3 and 7 are not used when decreasing stages.
2. The loading sequence for 30GXN,R204-264 units is the same as those shown for the 30HX206,271 above.

The following tables show the loading sequence for 30HX206 (57/43 split) and 30HX271 (67/33 split) chillers. All compressors have two loaders and the chiller is configured for *staged circuit loading*. Loaders A1 on compressors A1 and A2 are energized in parallel. The same is true for Loaders A2 on both compressors A1 and A2. See Note 3.

STANDARD LOADING SEQUENCE (CIRCUIT A LEAD CIRCUIT, 3-COMPRESSOR UNIT)

STAGE	COMP A1	LOADER A1	LOADER A2	COMP A2	COMP B1	LOADER B1	LOADER B2	% TOTAL CAPACITY (57/43 Split)	% TOTAL CAPACITY (67/33 Split)
0	0	0	0	0	0	0	0	0.0	0.0
1	1	0	0	0	0	0	0	14.3	13.3
2	1	1	0	0	0	0	0	25.0	23.3
3	1	1	1	0	0	0	0	35.7	33.3
4	1	1	0	1	0	0	0	39.7	46.7
5	1	1	1	1	0	0	0	56.8	66.7
6	1	1	1	1	1	1	0	87.0	90.0
7	1	1	1	1	1	1	1	100.0	100.0

CLOSE CONTROL LOADING SEQUENCE (CIRCUIT A LEAD CIRCUIT, 3-COMPRESSOR UNIT)

STAGE	COMP A1	LOADER A1	LOADER A2	COMP A2	COMP B1	LOADER B1	LOADER B2	% TOTAL CAPACITY (57/43 Split)	% TOTAL CAPACITY (67/33 Split)
0	0	0	0	0	0	0	0	0.0	0.0
1	1	0	0	0	0	0	0	14.3	13.3
2	1	1	0	0	0	0	0	25.0	23.3
3	1	1	1	0	0	0	0	35.7	33.3
3A	1	0	0	1	0	0	0	22.7	26.7
4	1	1	0	1	0	0	0	39.7	46.7
5	1	1	1	1	0	0	0	56.8	66.7
6	1	1	1	1	1	0	0	74.1	80.0
7	1	1	1	1	1	1	0	87.0	90.0
8	1	1	1	1	1	1	1	100.0	100.0

LEGEND

0 — Off
1 — On

NOTES:

1. Stage 3A is not used by the algorithm when increasing stages. Stage 3 is not used by the algorithm when decreasing stages.
2. The % Total Capacities above are calculated based on compressor nominal tons. For the case of the 57/43 split above, the 30HX uses compressors with flow rates of 209, 123, and 250 cfm (from compressor model numbers 06N_**209**, 06N_**123**, and 06N_**250**), which represent nominal tons of 66, 39, and 80 (respectively) at 60 Hz. A factor of 40% is used when no loaders are energized, and a factor of 70% is used when Loader 1 is energized. The capacity shown for Stage 4 above is calculated as follows:

   % Total Capacity=[(0.70 x 66 + 0.70 x 39 + 0.0 x 80)/(66 + 39 + 80)] x 100% = 39.7%
3. The loading sequence for 30GXN,R204-264 units is the same as those shown for the 30HX206, 271 above.

APPENDIX B (cont)

The following tables show the loading sequence for a 30GXN,R350 chiller. Each compressor has 2 loaders and the chiller is configured for *equal circuit loading*. See Note 2.

STANDARD LOADING SEQUENCE (CIRCUIT A LEAD CIRCUIT, 4-COMPRESSOR UNIT)									
STAGE	COMP A1	LOADER A1	LOADER A2	COMP A2	COMP B1	LOADER B1	LOADER B2	COMP B2	% TOTAL CAPACITY (50/50 Split)
0	0	0	0	0	0	0	0	0	0.0
1	1	0	0	0	0	0	0	0	10.0
2	1	1	0	0	0	0	0	0	18.0
3	1	1	1	0	0	0	0	0	25.0
4	1	1	0	0	1	1	0	0	35.0
5	1	1	1	0	1	1	0	0	43.0
6	1	1	1	0	1	1	1	0	50.0
7	1	1	0	1	1	1	1	0	60.0
8	1	1	0	1	1	1	0	1	70.0
9	1	1	1	1	1	1	0	1	85.0
10	1	1	1	1	1	1	1	1	100.0

CLOSE CONTROL LOADING SEQUENCE (CIRCUIT A LEAD CIRCUIT, 4-COMPRESSOR UNIT)									
STAGE	COMP A1	LOADER A1	LOADER A2	COMP A2	COMP B1	LOADER B1	LOADER B2	COMP B2	% TOTAL CAPACITY (50/50 Split)
0	0	0	0	0	0	0	0	0	0.0
1	1	0	0	0	0	0	0	0	10.0
2	1	1	0	0	0	0	0	0	18.0
3	1	1	1	0	0	0	0	0	25.0
3A	1	0	0	0	1	0	0	0	20.0
4	1	0	0	0	1	1	0	0	28.0
5	1	1	0	0	1	1	0	0	35.0
6	1	1	1	0	1	1	0	0	43.0
7	1	1	1	0	1	1	1	0	50.0
7A	1	0	0	1	1	1	1	0	45.0
8	1	1	0	1	1	1	1	0	60.0
9	1	1	0	1	1	1	0	1	70.0
10	1	1	1	1	1	1	0	1	85.0
11	1	1	1	1	1	1	1	1	100.0

LEGEND
0 — Off
1 — On

NOTES:
1. Stages 3A and 7A are not used by the algorithm when increasing stages. Stages 3 and 7 are not used by the algorithm when decreasing stages.
2. The loading sequence for 30GXN,R281-325 units is the same as those shown for the 30GXN,R350 above.

APPENDIX B (cont)

The following tables show the loading sequence for a 30GXN,R350 chiller. Each compressor has 2 loaders and the chillers are configured for *staged circuit loading*. See Note 2.

STANDARD LOADING SEQUENCE (CIRCUIT A LEAD CIRCUIT, 4-COMPRESSOR UNIT)									
STAGE	**COMP A1**	**LOADER A1**	**LOADER A2**	**COMP A2**	**COMP B1**	**LOADER B1**	**LOADER B2**	**COMP B2**	**% TOTAL CAPACITY (50/50 Split)**
0	0	0	0	0	0	0	0	0	0.0
1	1	0	0	0	0	0	0	0	10.0
2	1	1	0	0	0	0	0	0	18.0
3	1	1	1	0	0	0	0	0	25.0
4	1	1	0	1	0	0	0	0	35.0
5	1	1	1	1	0	0	0	0	50.0
6	1	1	1	1	1	1	0	0	68.0
7	1	1	1	1	1	1	1	0	75.0
8	1	1	1	1	1	1	0	1	85.0
9	1	1	1	1	1	1	1	1	100.0

CLOSE CONTROL LOADING SEQUENCE (CIRCUIT A LEAD CIRCUIT, 4-COMPRESSOR UNIT)									
STAGE	**COMP A1**	**LOADER A1**	**LOADER A2**	**COMP A2**	**COMP B1**	**LOADER B1**	**LOADER B2**	**COMP B2**	**% TOTAL CAPACITY (50/50 Split)**
0	0	0	0	0	0	0	0	0	0.0
1	1	0	0	0	0	0	0	0	10.0
2	1	1	0	0	0	0	0	0	18.0
3	1	1	1	0	0	0	0	0	25.0
3A	1	0	0	1	0	0	0	0	20.0
4	1	1	0	1	0	0	0	0	35.0
5	1	1	1	1	0	0	0	0	50.0
6	1	1	1	1	1	0	0	0	60.0
7	1	1	1	1	1	1	0	0	68.0
8	1	1	1	1	1	1	1	0	75.0
8A	1	1	1	1	1	0	0	1	70.0
9	1	1	1	1	1	1	0	1	85.0
10	1	1	1	1	1	1	1	1	100.0

LEGEND
0 — Off
1 — On

NOTES:
1. Stages 3A and 8A are not used by the algorithm when increasing stages. Stages 3 and 8 are not used by the algorithm when decreasing stages.
2. The loading sequence for 30GXN,R281-325 units is the same as those shown for the 30GXN,R350 above.

APPENDIX C

Available Accessories

ACCESSORY PART NUMBER	USED ON	DESCRIPTION OF ACCESSORY	COMMENTS
30GX-900---001	30GXN,R080,090*	Condenser Grille Package	
30GX-900---002	30GXN,R083, 093, 106, 108, 114, 115, 125, 135*	Condenser Grille Package	
30GX-900---003	30GXN,R118, 128, 138, 150, 160*	Condenser Grille Package	
30GX-900---013	30GXN,R153, 174, 175, 204, 205, 225*	Condenser Grille Package	
30GX-900---024	30GXN,R163, 178*	Condenser Grille Package	
30GX-900---009	30GXN,R249, 250, 264*	Condenser Grille Package	
30GX-900---010	30GXN,R208, 228*	Condenser Grille Package	
30GX-900---034	30GXN,R253, 268, 281-350	Condenser Grille Package	
30GX-900---048	30GXN,R and 30HX (115 V Control)	Minimum Load Valve	Both circuits
30GX-900---049	30GXN,R and 30HX (230 V Control)	Minimum Load Valve	Both circuits
30GX-900---015	30GXN,R080-350	Sound Enclosure/Hail Guard/Wind Baffle	Header end only
30GX-900---016	30GXN,R080,090*	Sound Enclosure/Hail Guard/Wind Baffle	One side per package
30GX-900---017	30GXN,R083, 093, 106, 108, 114, 115, 125, 135*	Sound Enclosure/Hail Guard/Wind Baffle	One side per package
30GX-900---018	30GXN,R118, 128, 138, 150, 160*	Sound Enclosure/Hail Guard/Wind Baffle	One side per package
30GX-900---019	30GXN,R153, 174, 175, 204, 205, 225*	Sound Enclosure/Hail Guard/Wind Baffle	One side per package
30GX-900---020	30GXN,R163, 178, 249, 250, 264*	Sound Enclosure/Hail Guard/Wind Baffle	One side per package
30GX-900---030	30GXN,R208, 228*	Sound Enclosure/Hail Guard/Wind Baffle	One side per package
30GX-900---039	30GXN,R253, 268, 281-350*	Sound Enclosure/Hail Guard/Wind Baffle	One side per package
30GX-900---023	30GXN,R080-250, 264*	Vibration Isolation Pads	
30GX-900---035	30GXN,R253, 268-350*	Vibration Isolation Pads	
30HX-900---010	30HX All	Vibration Isolation Pads	
30GX-900---025	30GXN,R108, 115, 125, 135, 160, 163, 174, 175, 178 30HX161-186	Insulation Kit (16″, 3-Pass Cooler with Economizer)	Tubesheets, heads and economizers
30GX-900---026	30GXN,R118, 128, 138, 150, 153	Insulation Kit (14″, 2-Pass Cooler with Economizer)	Tubesheets, heads and economizers
30GX-900---027	30GXN,R118, 128, 138, 150, 153	Insulation Kit (14″, 1-Pass Cooler with Economizer)	Tubesheets, heads and economizers
30GX-900---032	30GXN,R204-268 30HX206-271	Insulation Kit (18″, 3-Pass Cooler with Economizer)	Tubesheets, heads and economizers
30GX-900---033	30GXN,R118, 128, 138, 150, 153	Insulation Kit (14″, 3-Pass Cooler with Economizer)	Tubesheets, heads and economizers
30GX-900---036	30GXN,R281-350	Insulation Kit (20″, 3-Pass Cooler with Economizer)	Tubesheets, heads and economizers
30GX-900---037	30GXN,R281-350	Insulation Kit (20″, 2-Pass Cooler with Economizer)	Tubesheets, heads and economizers
30GX-900---038	30GXN,R281-350	Insulation Kit (20″, 1-Pass Cooler with Economizer)	Tubesheets, heads and economizers
30GX-900---046	30GXN,R204-268*	Insulation Kit (18″, 1-Pass Cooler with Economizer)	Tubesheets, heads and economizers
30HX-900---016	30GXN,R080, 083, 090, 093 30HX076-096, 116-146	Insulation Kit (14″, 3-Pass Cooler, no Economizer)	Tubesheets, heads and economizers
30HX-900---017	30GXN,R080, 083, 090, 093 30HX076-096, 116-146	Insulation Kit (14″, 2/4-Pass Cooler, no Economizer)	Tubesheets, heads and economizers
30HX-900---019	30GXN,R106, 114	Insulation Kit (16″, 3-Pass Cooler, no Economizer)	Tubesheets, heads and economizers
30HX-900---020	30GXN,R108, 115, 125, 135, 160, 163, 174, 175, 178 30HX161-186	Insulation Kit (16″, 2/4-Pass Cooler with Economizer)	Tubesheets, heads and economizers
30HX-900---021	30GXN,R160, 163, 174, 175, 178	Insulation Kit (16″, 1-Pass Cooler with Economizer)	Tubesheets, heads and economizers
30HX-900---022	30GXN,R204-268	Insulation Kit (18″, 2-Pass Cooler with Economizer)	Tubesheets, heads and economizers
30HX-900---023	30HX206-271	Insulation Kit (18″, 1-Pass Cooler with Economizer)	Tubesheets, heads and economizers
30HX-900---024	30GXN,R106, 114	Insulation Kit (16″, 2/4-Pass Cooler, no Economizer)	Tubesheets, heads and economizers
30GX-900---044	30GXN,R220B	Insulation Kit (14″, 1-Pass Cooler, no Economizer)	Tubesheets, heads and economizers
30GX-900---045	30GXN,R220A, 240A/B, 275A/B, 300A/B, 303A, 320A/B, 328A, 345A/B, 353A/B, 365B, 390B, 395B, 415B	Insulation Kit (16″, 1-Pass Cooler, no Economizer)	Tubesheets, heads and economizers
30GX-900---047	30GXN,R283A/B, 303B, 328B, 370B,373B, 393B, 418B	Insulation Kit (14″, 1-Pass Cooler, with Economizer)	Tubesheets, heads and economizers

*And associated modular sizes.

APPENDIX C (cont)

Available Accessories (cont)

ACCESSORY PART NUMBER	USED ON	DESCRIPTION OF ACCESSORY	COMMENTS
30HX-900---001	30HX116-271	Sound Enclosure Panels	
30HX-900---011	30HX076-106	Sound Enclosure Panels	
30HX-900---004	30HX076-146	Victaulic Condenser Connections (18 in.)	
30HX-900---005	30HX161-186	Victaulic Condenser Connections (20 in.)	
30HX-900---015	30HX206-271	Victaulic Condenser Connections (22 in.)	
30HX-900---032	30GXN,R and 30HX All	Energy Management Module	
30HX-900---033	30HX (230 V, 460 V)	Control Transformer	
30HX-900---034	30HX (575 V)	Control Transformer	
30GX-900---050	30GXN,R (230 V, 460 V)	Control Transformer (080-178*)	
30GX-900---051	30GXN,R (575 V)	Control Transformer (080-178*)	
30GX-900---052	30GXN,R (208 V)	Control Transformer (080-178*)	
30GX-900---055	30GXN,R (230 V, 460 V)	Control Transformer (204-350*)	
30GX-900---056	30GXN,R (575 V)	Control Transformer (204-350*)	
30GX-900---057	30GXN,R (208 V)	Control Transformer (204-350*)	
30GX-900---058	30GXN,R220-528 Duplex	Duplex Trim Kit	
30GX-900---059	30GXN,R080-150, 160*	Motormaster® V Control (575 V)	Single controller
30GX-900---061	30GXN,R080-150, 160*	Motormaster V Control (208/230 V)	Single controller
30GX-900---062	30GXN,R080-150,160*	Motormaster V Control (575 V)	Single controller
30GX-900---063	30GXN,R153,163-350*	Motormaster V Control (575 V)	Two controllers
30GX-900---065	30GXN,R153,163-350*	Motormaster V Control (208/230 V)	Two controllers
30GX-900---066	30GXN,R153,163-350*	Motormaster V Control (575 V)	Two controllers
CEPL130322-02	30GXN,R and 30HX All	Chillervisor System Manager III	
CPNLDLK-01	30GXN,R and 30HX All	DataLink Control Panel	
CPNLDPT-01	30GXN,R and 30HX All	DataPort Control Panel	
CRLIDASY001A00	30GXN,R and 30HX All	Remote Enhanced Display	
30GT-911---049	30GXN,R and 30HX All	GFI Convenience Outlet (60 Hz only)	
30GT-911---057	30GXN,R All	Unit Control Display Window	
30GT-911---063	30GXN,R All	Remote Service Port	

*And associated modular sizes.

APPENDIX D

Building Interface — The 30GXN,GXR,HX chiller can be interfaced with multi-vendor control systems through 3 levels of inter-operability using BacLink, DataPort™, or DataLINK™ devices. BacLink functions as a gateway between a CCN and a BACnet system to facilitate the passing of data from the CCN to BACnet. The Carrier DataPort is an interface device that allows other HVAC control systems to "read only" values in system elements connected to a CCN communication bus. The Carrier DataLINK device is an interface device that allows other HVAC control systems to read and change ("read/write") values in system elements connected to a CCN bus. Both DataPort and DataLINK devices request data from a specified CCN system element and translate this data into ASCII characters off network. Information from the 30GXN,GXR,HX chiller control to support interface are listed in the following tables.

BacLink Object Definition

CCN TABLE NAME	DESCRIPTION	POINT	ACCESS
A_UNIT	Control Mode	STAT	RO
	Occupied	OCC	RO
	CCN Chiller	CHIL_S_S	RW
	Alarm State	ALM	RO
	Active Demand Limit	DEM_LIM	RW
	Percent Total Capacity	CAP_T	RO
	Control Point	CTRL_PNT	RW
	Entering Fluid Temp	EWT	RO
	Leaving Fluid Temp	LWT	RO
	Emergency Stop	EMSTOP	RW
	Heat Cool Select	HEATCOOL	RO
CIRCADIO	Compressor A1 Relay	K_A1_RLY	RO
	Compressor A2 Relay	K_A2_RLY	RO
	Min Load Valve	MLV	RO
CIRCA_AN	Percent Total Capacity	CAPA_T	RO
	Percent Available Capacity	CAPA_A	RO
	Discharge Pressure	DP_A	RO
	Suction Pressure	SP_A	RO
	Discharge Superheat Temp	SH_A	RO
	Saturated Condensing Temp	TMP_SCTA	RO
	Saturated Suction Temp	TMP_SSTA	RO
CIRBDIO	Compressor B1 Relay	K_B1_RLY	RO
	Compressor B2 Relay	K_B2_RLY	RO
CIRCB_AN	Percent Total Capacity	CAPB_T	RO
	Percent Available Capacity	CAPB_A	RO
	Discharge Superheat Temp	SH_B	RO
	Saturated Condensing Temp	TMP_SCTB	RO
	Saturated Suction Temp	TMP_SSTB	RO
OPTIONS	Fan 1 Relay	FAN_1	RO
	Fan 2 Relay	FAN_2	RO
	Fan 3 Relay	FAN_3	RO
	Fan 4 Relay	FAN_4	RO
	Cooler Entering Fluid	COOL_EWT	RO
	Cooler Leaving Fluid	COOL_LWT	RO
	Condenser Entering Fluid	COND_EWT	RO
	Condenser Leaving Fluid	COND_LWT	RO
	4-20 ma Reset Signal	RST_MA	RO
	4-20 ma Demand Signal	LMT_MA	RO
	CCN Loadshed Signal	DL_STAT	RO
	Cooler Pump Relay	COOL_PMP	RO
	Condenser Pump Relay	COND_PMP	RO
SETPOINT	Cooling Setpoint 1	CSP1	RW
	Heating Setpoint 1	HSP1	RW

CCN TABLE NAME	DATA TABLE NAME	ACCESS
OCCDEFCS	OCCPC01S	RW

LEGEND
RO — Read Only
RW — Read/Write

APPENDIX D (cont)

DataPort™/DataLINK™ Object Definition

CCN TABLE NAME	DESCRIPTION	STATUS	UNITS	POINT	FORCIBLE
A_UNIT	GENERAL PARAMETERS				
	Control Mode	(Modes 0-7)		STAT	N
	Occupied	Yes/No		OCC	N
	CCN Chiller	Start/Stop		CHIL_S_S	Y
	Alarm State	Normal/Alarm/Alert		ALM	N
	Active Demand Limit	0-100	%	DEM_LIM	Y
	Override Modes in Effect	Yes/No		MODE	N
	Percent Total Capacity	0-100	%	CAP_T	N
	Active Setpoint	snn.n	°F	SP	N
	Control Point	snn.n	°F	CTRL_PNT	Y
	Entering Fluid Temp	snnn.,n	°F	EWT	N
	Leaving Fluid Temp	snnn.n	°F	LWT	N
	Emergency Stop	Enable/Emstop		EMSTOP	Y
	Minutes Left for Start	0-15	min	MIN_LEFT	N
	Heat Cool Select	Heat/Cool		HEATCOOL	N
CIRCADIO	CIR. A DISCRETE OUTPUTS				
	Compressor A1 Relay	On/Off		K_A1_RLY	N
	Compressor A2 Relay	On/Off		K_A2_RLY	N
	Loader A1 Relay	On/Off		LOADR_A1	N
	Loader A2 Relay	On/Off		LOADR_A2	N
	Minimum Load Valve	On/Off		MLV	N
	Oil Heater	On/Off		OILA_HTR	N
	Motor Cooling A1 Solenoid	On/Off		MTRCL_A1	N
	Motor Cooling A2 Solenoid	On/Off		MTRCL_A2	N
	Oil Pump	On/Off		OILPMP_A	N
	Oil Solenoid A1	On/Off		OILSL_A1	N
	Oil Solenoid A2	On/Off		OILSL_A2	N
	CIR A DISCRETE INPUTS				
	Compressor A1 Feedback	On/Off		K_A1_FBK	N
	Compressor A2 Feedback	On/Off		K_A2_FBK	N
	Oil Level Switch	Close/Open		OILA_SW	N
CIRCA_AN	CIRCUIT A ANALOG VALUES				
	Percent Total Capacity	0-100	%	CAPA_T	N
	Percent Available Capacity	0-100	%	CAPA_A	N
	Circuit Running Current	0-1200	Amps	A_CURR	N
	Discharge Pressure	nnn.n	PSIG	DP_A	N
	Suction Pressure	nnn.n	PSIG	SP_A	N
	Economizer Pressure	nnn.n	PSIG	ECNP_A	N
	Discharge Superheat Temp	snnn.n	°F	SH_A	N
	Discharge Gas Temperature	nnn.n	°F	DISTMP_A	N
	Saturated Condensing Temp	snnn.n	°F	TMP_SCTA	N
	Saturated Suction Temp	snnn.n	°F	TMP_SSTA	N
	EXV% Open	0-100	%	EXV_A	N
	MM Speed/Wtr Vlv % Open	0-100	%	HP_OUT_A	N
	Cooler Level Indicator	0-3		LEVEL_A	N
	COMP A1 ANALOG VALUES				
	A1 Oil Pressure Diff.	nnn.n	PSI	DOP_A1	N
	A1 Oil Pressure	nnn.n	PSIG	OP_A1	N
	A1 Motor Temperature	nnn.n	°F	TMTR_A1	N
	Comp A1 Running Current	0-600	Amps	A1_CURR	N
	Comp A1% Must Trip Amps	0-100	%	A1_MTA	N
	COMP A2 ANALOG VALUES				
	A2 Oil Pressure Diff.	nnn.n	PSI	DOP_A2	N
	A2 Oil Pressure	nnn.n	PSIG	OP_A2	N
	A2 Motor Temperature	nnn.n	°F	TMTR_A2	N
	Comp A2 Running Current	0-600	Amps	A2_CURR	N
	Comp A2 % Must Trip Amps	0-100	%	A2_MTA	N
CIRCBDIO	CIR. B DISCRETE OUTPUTS				
	Compressor B1 Relay	On/Off		K_B1_RLY	N
	Compressor B2 Relay	On/Off		K_B2_RLY	N
	Loader B1 Relay	On/Off		LOADR_B1	N
	Loader B2 Relay	On/Off		LOADR_B2	N
	Minimum Load Valve	On/Off		MLV	N
	Oil Heater	On/Off		OILB_HTR	N
	Motor Cooling B1 Solenoid	On/Off		MTRCL_B1	N
	Motor Cooling B2 Solenoid	On/Off		MTRCL_B2	N
	Oil Pump	On/Off		OILPMP_B	N
	Oil Solenoid B1	On/Off		OILSL_B1	N
	Oil Solenoid B2	On/Off		OILSL_B2	N
	CIR B DISCRETE INPUTS				
	Compressor B1 Feedback	On/Off		K_B1_FBK	N
	Compressor B2 Feedback	On/Off		K_B2_FBK	N
	Oil Level Switch	Close/Open		OILB_SW	N

DataPort™/DataLINK™ Object Definition (cont)

CCN TABLE NAME	DESCRIPTION	STATUS	UNITS	POINT	FORCIBLE
CIRCB_AN	CIRCUIT B ANALOG VALUES				
	Percent Total Capacity	0-100	%	CAPB_T	N
	Percent Available Capacity	0-100	%	CAPB_A	N
	Circuit Running Current	0-1200	Amps	B_CURR	N
	Discharge Pressure	nnn.n	PSIG	DP_B	N
	Suction Pressure	nnn.n	PSIG	SP_B	N
	Economizer Pressure	nnn.n	PSIG	ECNP_B	N
	Discharge Superheat Temp	snnn.n	°F	SH_B	N
	Discharge Gas Temperature	nnn.n	°F	DISTMP_B	N
	Saturated Condensing Temp	snnn.n	°F	TMP_SCTB	N
	Saturated Suction Temp	snnn.n	°F	TMP_SSTB	N
	EXV % Open	0-100	%	EXV_B	N
	MM Speed/Wtr Vlv % Open	0-100	%	HP_OUT_B	N
	Cooler Level Indicator	0-3		LEVEL_B	N
	COMP B1 ANALOG VALUES				
	B1 Oil Pressure Diff.	nnn.n	PSI	DOP_B1	N
	B1 Oil Pressure	nnn.n	PSIG	OP_B1	N
	B1 Motor Temperature	nnn.n	°F	TMTR_B1	N
	Comp B1 Running Current	0-600	Amps	B1_CURR	N
	Comp B1% Must Trip Amps	0-100	%	B1_MTA	N
	COMP B2 ANALOG VALUES				
	B2 Oil Pressure Diff.	nnn.n	PSI	DOP_B2	N
	B2 Oil Pressure	nnn.n	PSIG	OP_B2	N
	B2 Motor Temperature	nnn.n	°F	TMTR_B2	N
	Comp B2 Running Current	0-600	Amps	B2_CURR	N
	Comp B2 % Must Trip Amps	0-100	%	B2_MTA	N
OPTIONS	FANS				
	Fan 1 Relay	On/Off		FAN_1	N
	Fan 2 Relay	On/Off		FAN_2	N
	Fan 3 Relay	On/Off		FAN_3	N
	Fan 4 Relay	On/Off		FAN_4	N
	UNIT ANALOG VALUES				
	Cooler Entering Fluid	snnn.n	°F	COOL_EWT	N
	Cooler Leaving Fluid	snnn.n	°F	COOL_LWT	N
	Condenser Entering Fluid	snnn.n	°F	COND_EWT	N
	Condenser Leaving Fluid	snnn.n	°F	COND_LWT	N
	Lead/Lag Leaving Fluid	snnn.n	°F	DUAL_LWT	N
	TEMPERATURE RESET				
	4-20 ma Reset Signal	nn.n	ma	RST_MA	N
	Outside Air Temperature	snnn.n	°F	OAT	Y
	Space Temperature	snnn.n	°F	SPT	Y
	DEMAND LIMIT				
	4-20 ma Demand Signal	nn.n	ma	LMT_MA	N
	Demand Limit Switch 1	On/Off		DLSWSP1	N
	Demand Limit Switch 2	On/Off		DLSWSP2	N
	CCN Loadshed Signal	0-2		DL_STAT	N
	PUMPS				
	Cooler Pump Relay	On/Off		COOL_PMP	N
	Condenser Pump Relay	On/Off		COND_PMP	N
	MISCELLANEOUS				
	Dual Setpoint Switch	On/Off		DUAL_IN	N
	Cooler Flow Switch	On/Off		COOLFLOW	N
	Condenser Flow Switch	On/Off		CONDFLOW	N
	Ice Done	Yes/No		ICE	N
	Cooler Heater	On/Off		COOL_HTR	N
	4-20 ma Cooling Setpoint	nn.n	ma	CSP_IN	N
	4-20 ma Heating Setpoint	nn.n	ma	HSP_IN	N

CCN TABLE NAME	DESCRIPTION	STATUS	DEFAULT	UNITS	POINT
SETPOINT	COOLING				
	Cooling Setpoint 1	snnn.n	44.0	°F	CSP1
	Cooling Setpoint 2	snnn.n	44.0	°F	CSP2
	ICE Setpoint	snnn.n	32.0	°F	CSP3
	HEATING				
	Heating Setpoint 1	snnn.n	100.0	°F	HSP1
	Heating Setpoint 2	snnn.n	100.0	°F	HSP2
	RAMP LOADING				
	Cooling Ramp Loading	0.2-2.0	1.0	^F	CRAMP
	Heating Ramp Loading	0.2-2.0	1.0	^F	HRAMP
	HEAD PRESSURE				
	Head Pressure Setpoint A	nnn.n	113.0	°F	HSP_A
	Head Pressure Setpoint B	nnn.n	113.0	°F	HSP_B
	LIQUID LEVEL				
	Liquid Level Setpoint A	0-3	1.8		LVL_SPA
	Liquid Level Setpoint B	0-3	1.8		LVL_SPB

NOTE: All set point values may be modified at any time (Unit On/Off).

APPENDIX E

The following charts list pressure drops for coolers and condensers.

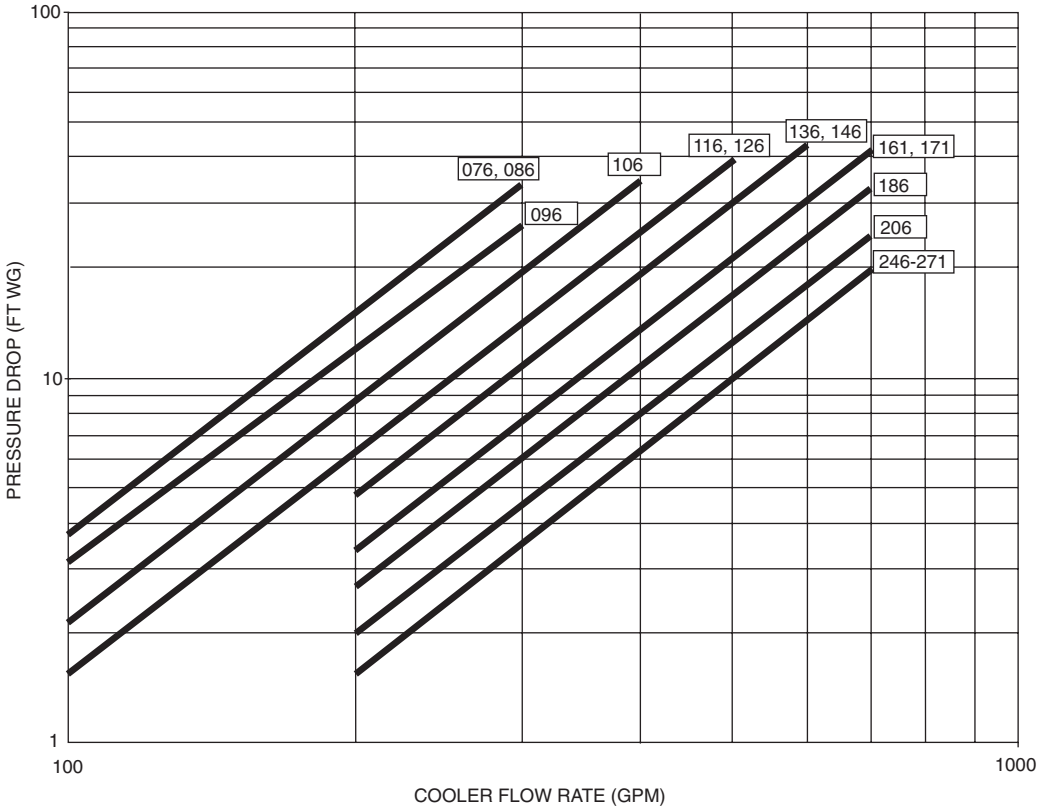

Unit Size Range

NOTE: Ft of water = 2.31 x psig.

30HX COOLER PRESSURE DROP — ENGLISH

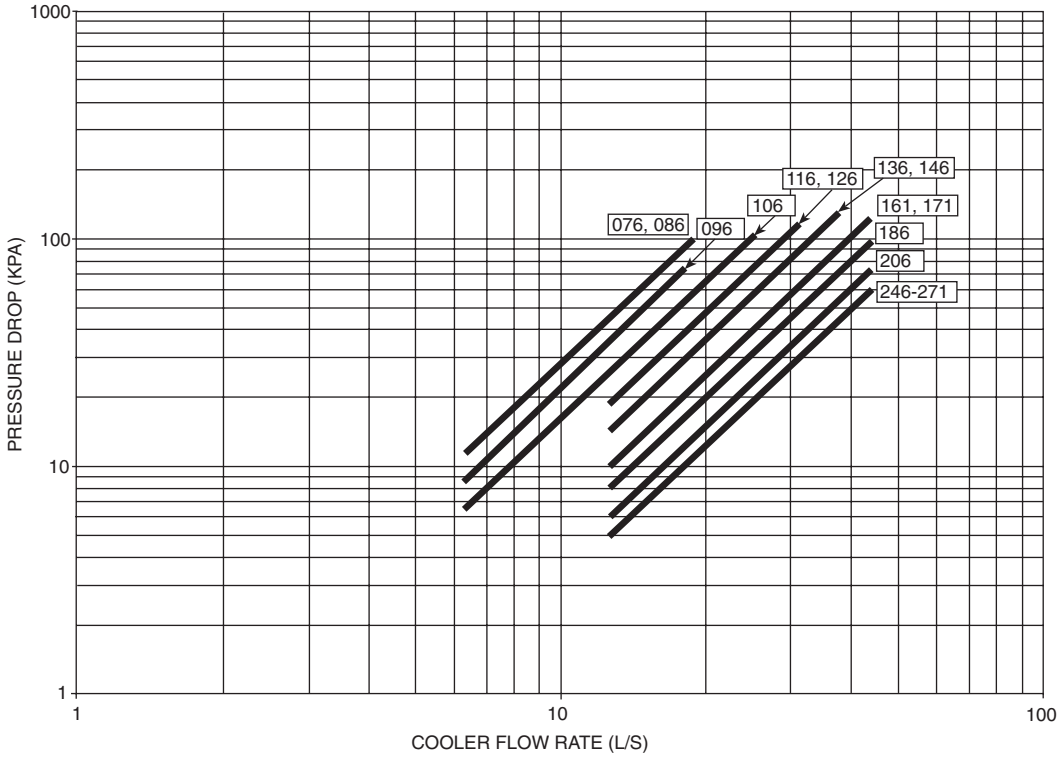

Unit Size Range

30HX COOLER PRESSURE DROP — SI

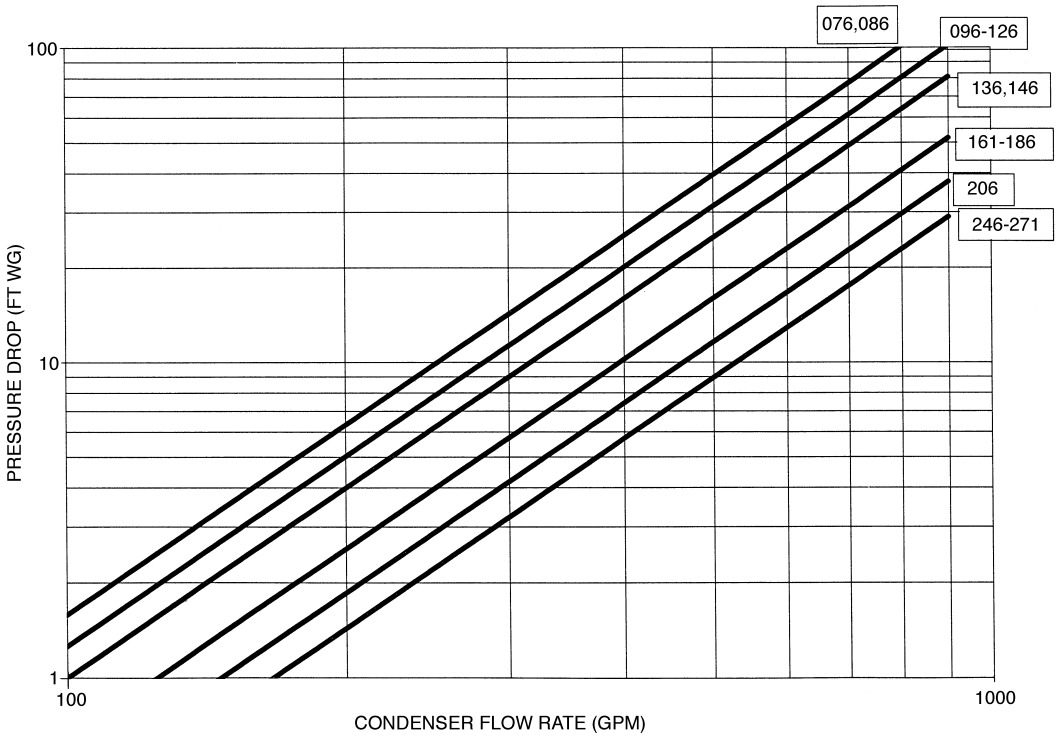

Unit Size Range

NOTE: Ft of water = 2.31 x psig.

30HX CONDENSER PRESSURE DROP — ENGLISH

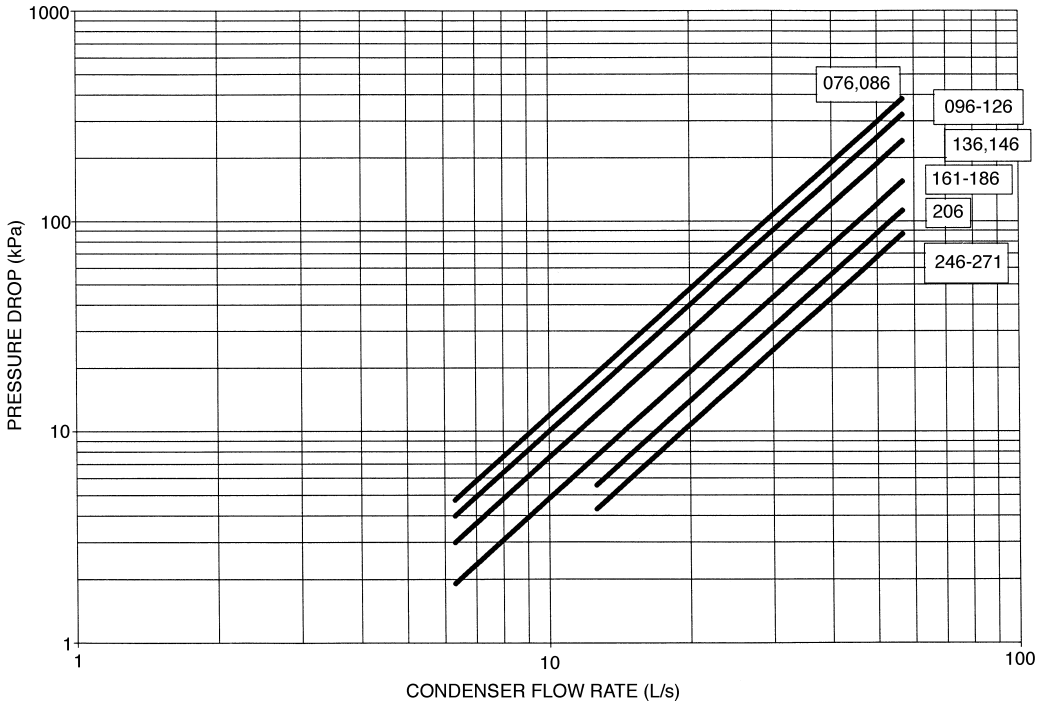

Unit Size Range

30HX CONDENSER PRESSURE DROP — SI

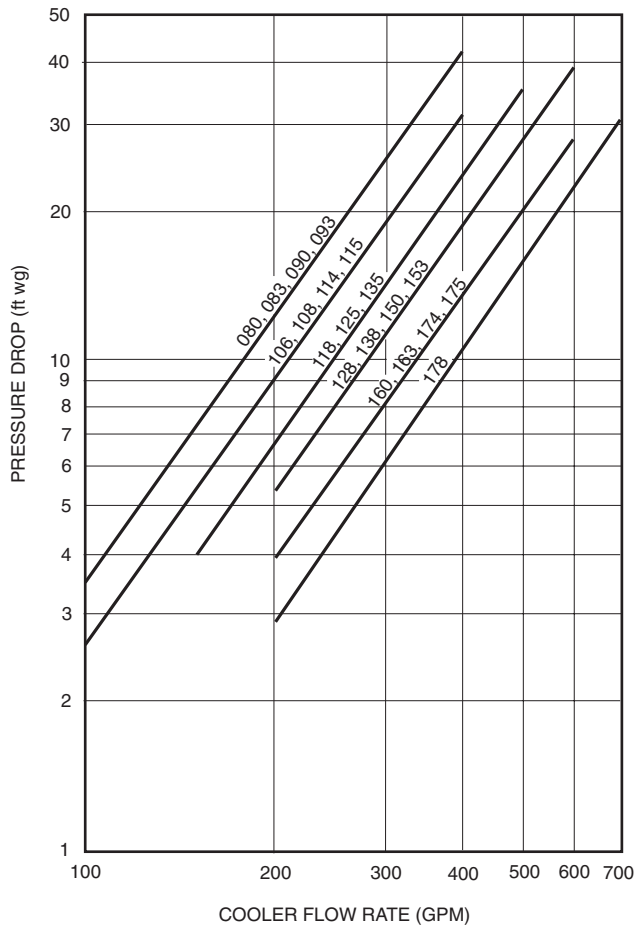

NOTE: Ft of water = 2.31 x psig.

30GXN,R080-178 COOLER PRESSURE DROP — ENGLISH

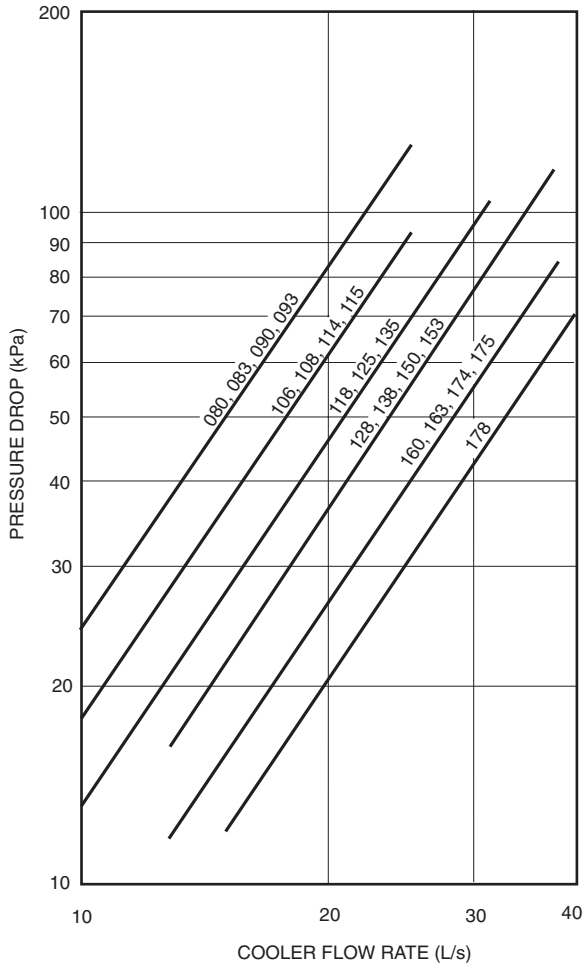

30GXN,R080-178 COOLER PRESSURE DROP — SI

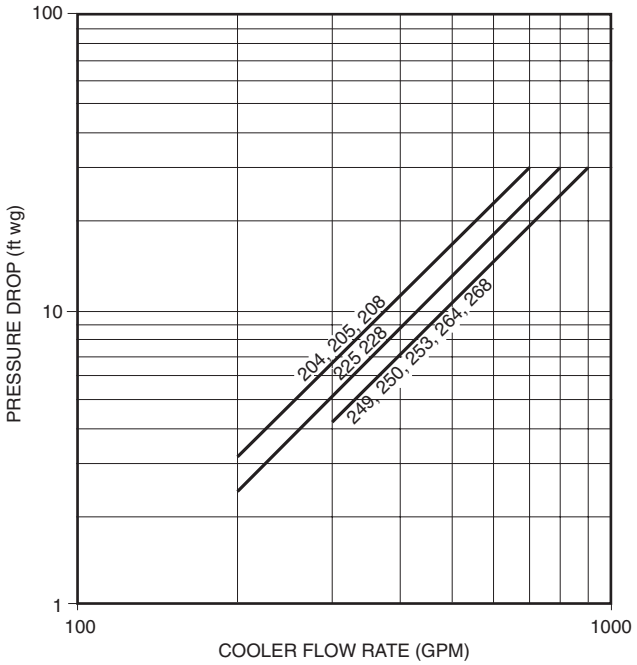

30GXN,R204-268 COOLER PRESSURE DROP — ENGLISH

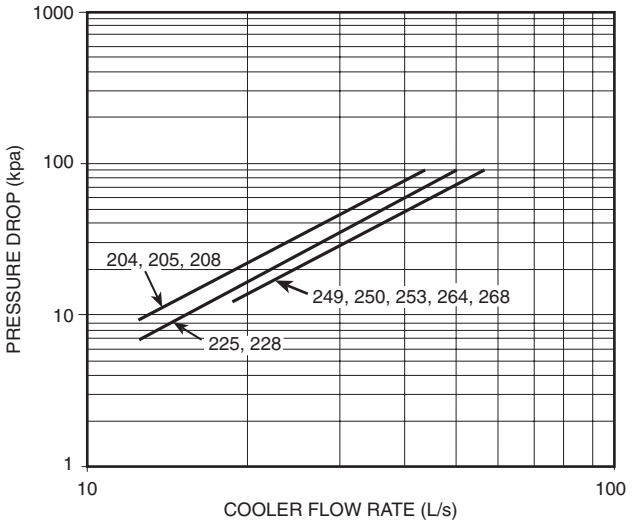

30GXN,R204-268 COOLER PRESSURE DROP — SI

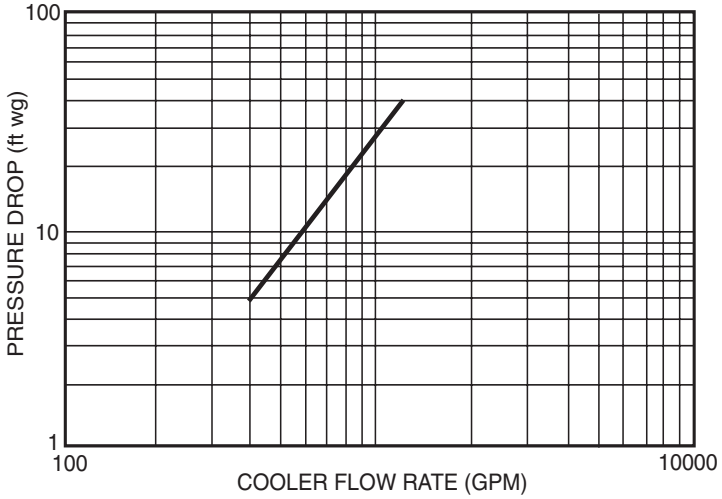

30GXN,R281-350 COOLER PRESSURE DROP — ENGLISH

NOTE: Ft of water = 2.31 x psig.

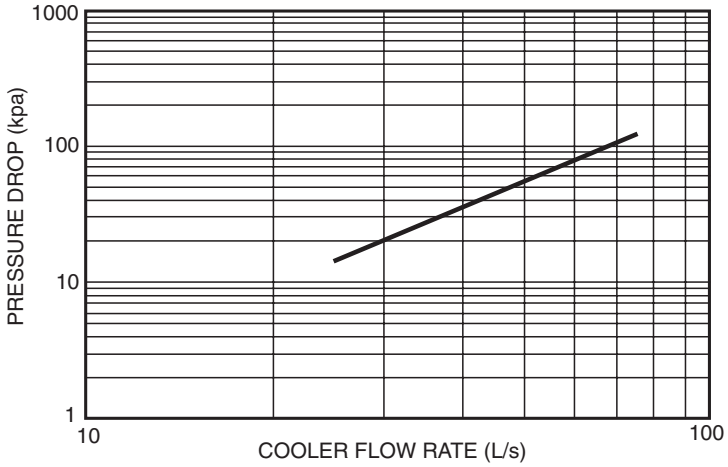

30GXN,R281-350 COOLER PRESSURE DROP — SI

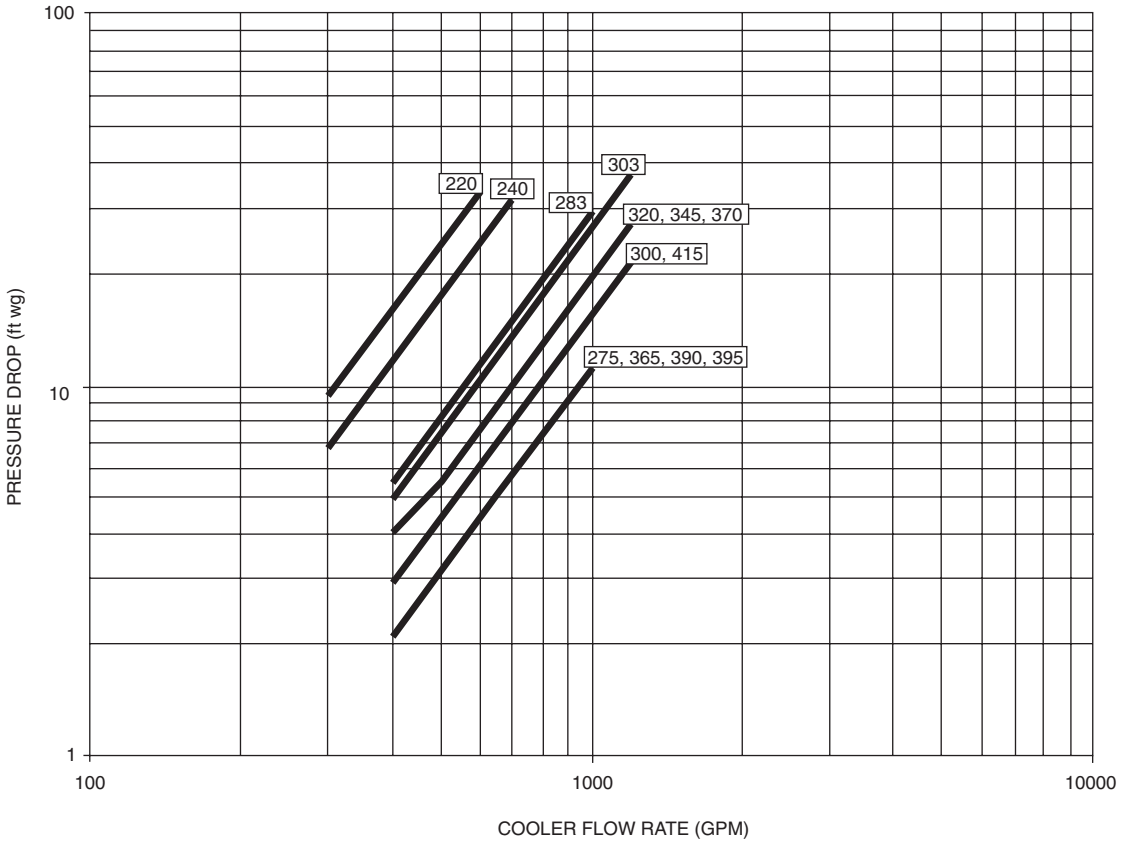

30GXN,R220-320, 345-365, 370, 390, 395, 415 DUPLEX COOLER PRESSURE DROP — ENGLISH

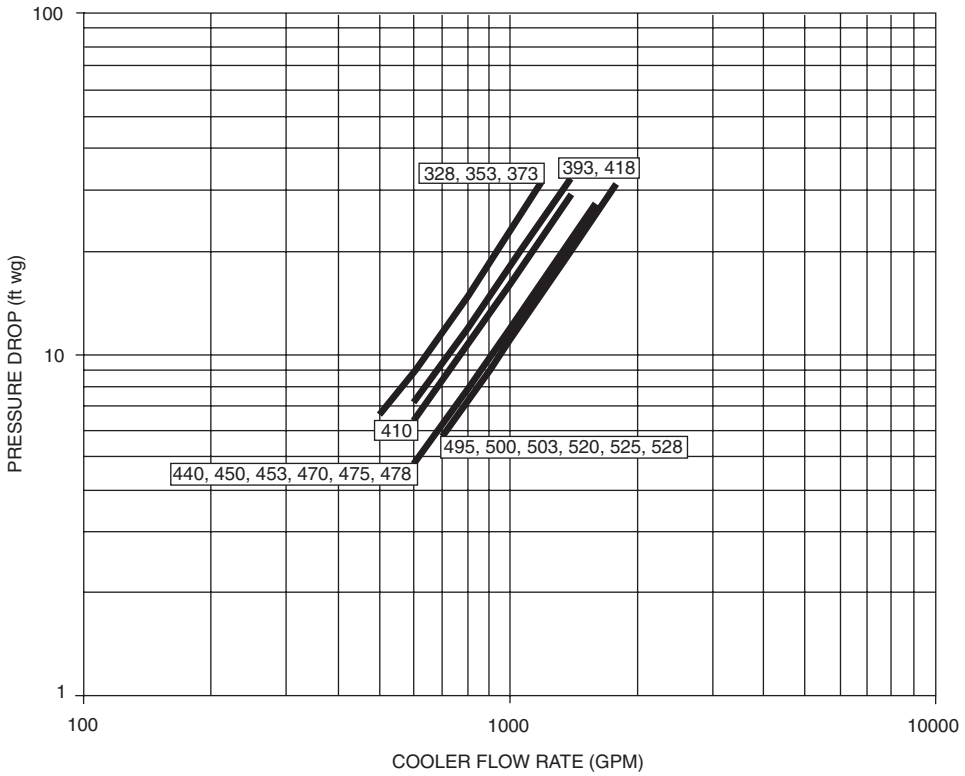

30GXN,R328, 353, 373, 393, 410, 418-528 DUPLEX COOLER PRESSURE DROP — ENGLISH

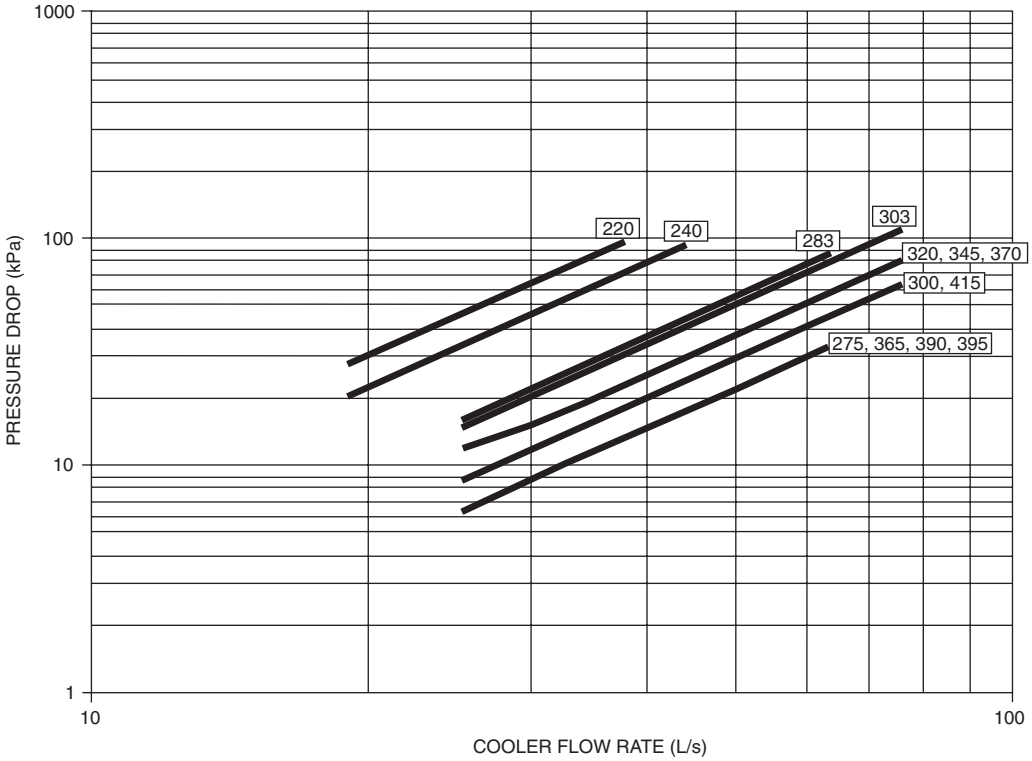

30GXN,R220-320, 345, 365, 370, 390, 395, 415 DUPLEX COOLER PRESSURE DROP — SI

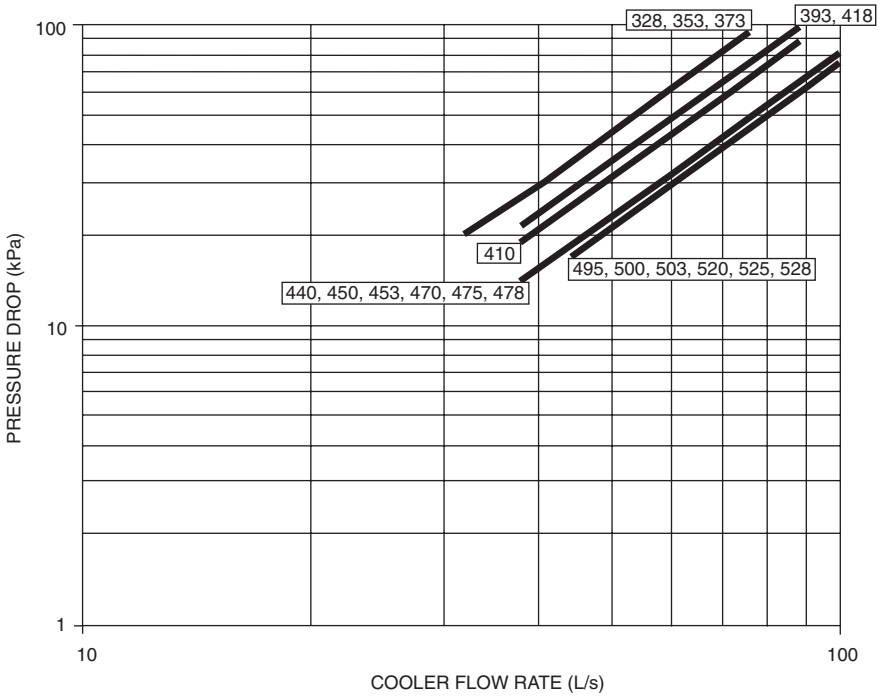

30GXN,R328, 353, 373, 393, 410, 418-528 DUPLEX COOLER PRESSURE DROP — SI

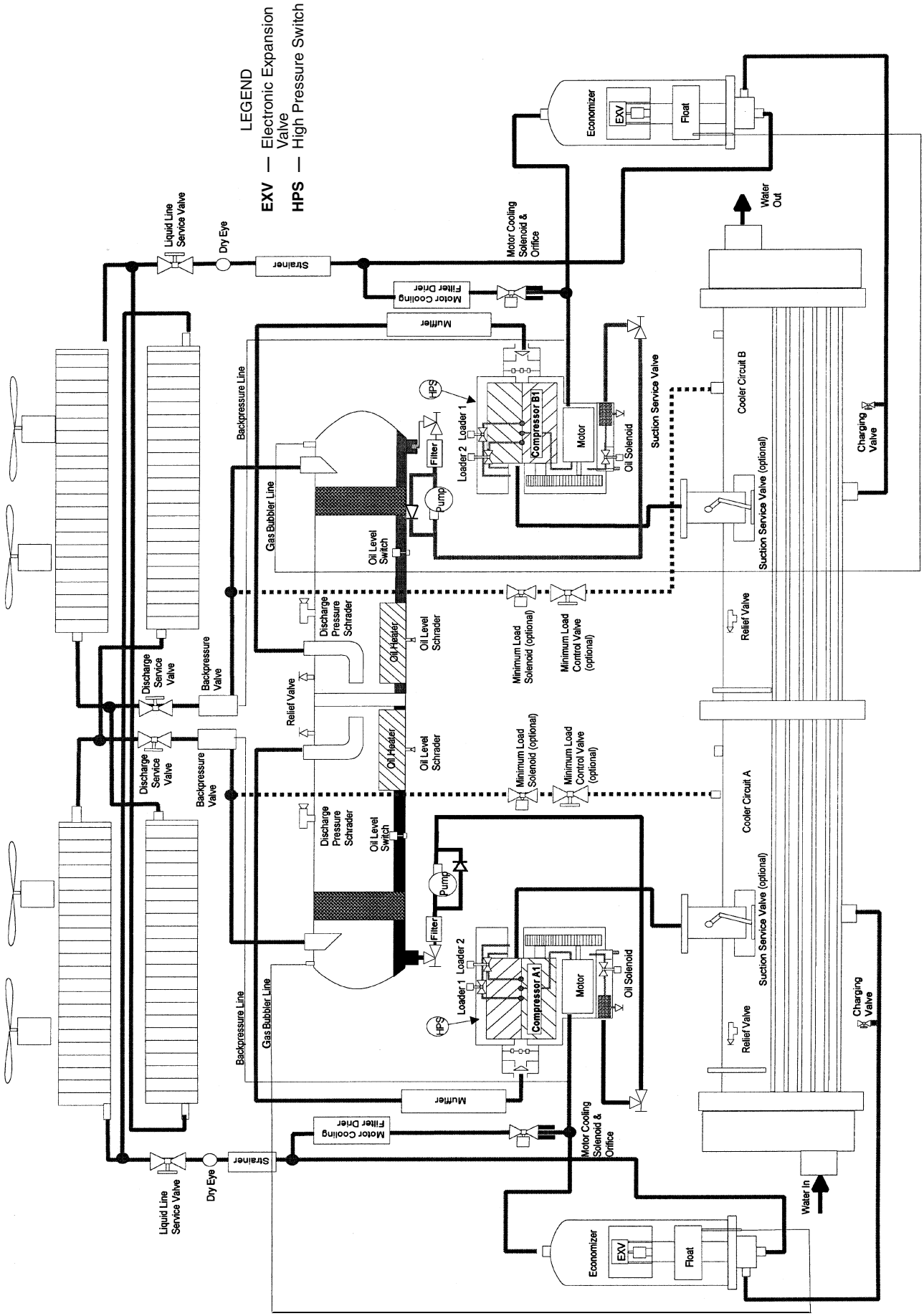

Typical System Components, 30GXN,R, With Economizer

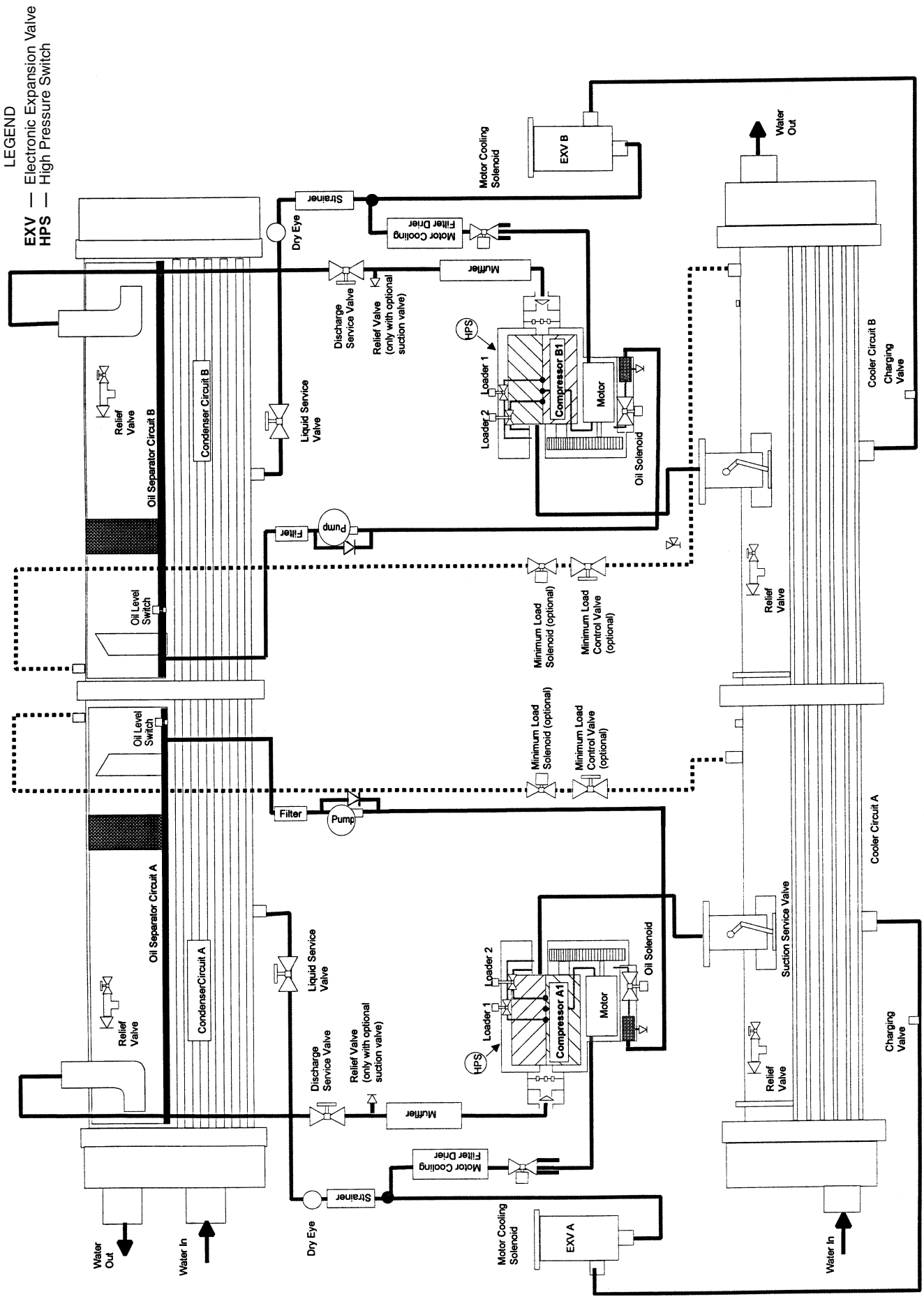

Typical System Components, 30HX, Without Economizer

APPENDIX G

A_UNIT (CCN Configurations): Status Display

DESCRIPTION	STATUS	UNITS	POINT	FORCIBLE
Control Mode	0 = Service Test 1 = Off - Local 2 = Off - CCN 3 = Off - Clock 4 = Off Emergency 5 = On - Local 6 = On - CCN 7 = On - Clock		STAT	N
Occupied	Yes/No		OCC	N
CCN Chiller Start/Stop	Start/Stop		CHIL_S_S	Y
Alarm State	0 = Normal 1 = Alarm 2 = Alert		ALM	N
Active Demand Limit	0 - 100	%	DEM_LIM	Y
Override Modes in Effect	Yes/No		MODE	N
Percent Total Capacity	0 - 100	%	CAP_T	N
Active Setpoint	snnn.n	°F	SP	N
Control Point	snn.n	°F	CTRL_PNT	Y
Entering Fluid Temp	snnn.n	°F	EWT	N
Leaving Fluid Temp	snnn.n	°F	LWT	N
Emergency Stop	Enable/Emstop		EMSTOP	Y
Minutes Left for Start	000-15 00:00-15:00	min	MIN_LEFT	N
Heat Cool Select	Heat/Cool		HEATCOOL	N

CIRCADIO (Circuit A Discrete Inputs/Outputs): Status Display

DESCRIPTION	STATUS	POINT	FORCIBLE
CIRC. A DISCRETE OUTPUTS			
Compressor A1 Relay	On/Off	K_A1_RLY	N
Compressor A2 Relay	On/Off	K_A2_RLY	N
Loader A1 Relay	On/Off	LOADR_A1	N
Loader A2 Relay	On/Off	LOADR_A2	N
Minimum Load Valve	On/Off	MLV	N
Oil Heater	On/Off	OILA_HTR	N
Motor Coolng A1 Solenoid	On/Off	MTRCL_A1	N
Motor Coolng A2 Solenoid	On/Off	MTRCL_A2	N
Oil Pump	On/Off	OILPMP_A	N
Oil Solenoid A1	On/Off	OILSL_A1	N
Oil Solenoid A2	On/Off	OILSL_A2	N
CIRC. A DISCRETE INPUTS			
Compressor A1 Feedback	On/Off	K_A1_FBK	N
Compressor A2 Feedback	On/Off	K_A2_FBK	N
Oil Level Switch	Close/Open	OILA_SW	N

CIRCA_AN (Circuit A Analog Parameters): Status Display

DESCRIPTION	STATUS	UNITS	POINT	FORCIBLE
CIRCUIT A ANALOG VALUES				
Percent Total Capacity	0 - 100	%	CAPA_T	N
Percent Available Cap	0 - 100	%	CAPA_A	N
Circuit Running Current	0 - 1200	AMPS	A_CURR	N
Discharge Pressure	nnn.n	PSIG	DP_A	N
Suction Pressure	nnn.n	PSIG	SP_A	N
Economizer Pressure	nnn.n	PSIG	ECNP_A	N
Discharge Superheat Temp	snnn.n	°F	SH_A	N
Discharge Gas Temp	nnn.n	°F	DISTMP_A	N
Saturated Condensing Tmp	snnn.n	°F	TMP_SCTA	N
Saturated Suction Temp	snnn.n	°F	TMP_SSTA	N
EXV % Open	0 - 100	%	EXV_A	N
Variable Head Press. PCT	0 - 100	%	VHPA	N
Cooler Level Indicator	0 - 3		LEVEL_A	N
COMP A1 ANALOG VALUES				
A1 Oil Pressure Diff.	nnn.n	PSIG	DOP_A1	N
A1 Oil Pressure	nnn.n	PSIG	OP_A1	N
A1 Motor Temperature	nnn.n	°F	TMTR_A1	N
Comp A1 Running Current	0 - 600	AMPS	A1_CURR	N
Comp A1 % Must Trip Amps	0 - 100	%	A1_MTA	N
COMP A2 ANALOG VALUES				
A2 Oil Pressure Diff.	nnn.n	PSIG	DOP_A2	N
A2 Oil Pressure	nnn.n	PSIG	OP_A2	N
A2 Motor Temperature	nnn.n	°F	TMTR_A2	N
Comp A2 Running Current	0 - 600	AMPS	A2_CURR	N
Comp A2 % Must Trip Amps	0 - 100	%	A2_MTA	N

APPENDIX G (cont)

CIRCBDIO: Status Display

DESCRIPTION	STATUS	POINT	FORCIBLE
CIRC. B DISCRETE OUTPUTS			
Compressor B1 Solenoid	On/Off	K_B1_RLY	N
Compressor B2 Solenoid	On/Off	K_B2_RLY	N
Loader B1 Relay	On/Off	LOADR_B1	N
Loader B2 Relay	On/Off	LOADR_B2	N
Minimum Load Valve	On/Off	MLV	N
Oil Heater	On/Off	OILB_HTR	N
Motor Coolng A1 Solenoid	On/Off	MTRCL_A1	N
Motor Coolng A2 Solenoid	On/Off	MTRCL_A2	N
Oil Pump	On/Off	OILPMP_B	N
Oil Solenoid B1	On/Off	OILSL_B1	N
Oil Solenoid B2	On/Off	OILSL_B2	N
CIRC. B DISCRETE INPUTS			
Compressor B1 Feedback	On/Off	K_B1_FBK	N
Compressor B2 Feedback	On/Off	K_B2_FBK	N
Oil Level Switch	Close/Open	OILB_SW	N

CIRCB_AN: Status Display

DESCRIPTION	STATUS	UNITS	POINT	FORCIBLE
CIRCUIT B ANALOG VALUES				
Percent Total Capacity	0 - 100	%	CAPB_T	N
Percent Available Cap	0 - 100	%	CAPB_A	N
Circuit Running Current	0 - 1200	AMPS	B_CURR	N
Discharge Pressure	nnn.n	PSIG	DP_B	N
Suction Pressure	nnn.n	PSIG	SP_B	N
Economizer Pressure	nnn.n	PSIG	ECNP_B	N
Discharge Superheat Temp	snnn.n	°F	SH_B	N
Discharge Gas Temp	nnn.n	°F	DISTMP_B	N
Saturated Condensing Tmp	snnn.n	°F	TMP_SCTB	N
Saturated Suction Temp	snnn.n	°F	TMP_SSTB	N
Variable Head Press. PCT	0 - 100	%	EXV_B	N
Motormaster Speed	0 - 100	%	VHPB	N
Cooler Level Indicator	0 - 3		LEVEL_B	N
COMP B1 ANALOG VALUES				
B1 Oil Pressure Diff.	nnn.n	PSIG	DOP_B1	N
B1 Oil Pressure	nnn.n	PSIG	OP_B1	N
B1 Motor Temperature	nnn.n	°F	TMTR_B1	N
Comp B1 Running Current	0 - 600	AMPS	B1_CURR	N
Comp B1 % Must Trip Amps	0 - 100	%	B1_MTA	N
COMP B2 ANALOG VALUES				
B2 Oil Pressure Diff.	nnn.n	PSIG	DOP_B2	N
B2 Oil Pressure	nnn.n	PSIG	OP_B2	N
B2 Motor Temperature	nnn.n	°F	TMTR_B2	N
Comp B2 Running Current	0 - 600	AMPS	B2_CURR	N
Comp B2 % Must Trip Amps	0 - 100	%	B2_MTA	N

APPENDIX G (cont)

OPTIONS: Status Display

DESCRIPTION	STATUS	UNITS	POINT	FORCIBLE
FANS				
Fan 1 Relay	On/Off		FAN_1	N
Fan 2 Relay	On/Off		FAN_2	N
Fan 3 Relay	On/Off		FAN_3	N
Fan 4 Relay	On/Off		FAN_4	N
UNIT ANALOG VALUES				
Cooler Entering Fluid	snnn.n	°F	COOL_EWT	N
Cooler Leaving Fluid	snnn.n	°F	COOL_LWT	N
Condenser Entering Fluid	snnn.n	°F	COND_EWT	N
Condenser Leaving Fluid	snnn.n	°F	COND_LWT	N
Lead/Lag Leaving Fluid	snnn.n	°F	DUAL_LWT	N
TEMPERATURE RESET				
4 - 20 ma Reset Signal	nn.n	ma	RST_MA	N
Outdoor Air Temperature	snnn.n	°F	OAT	Y
Space Temperature	snnn.n	°F	SPT	Y
DEMAND LIMIT				
4 - 20 ma Demand Signal	nn.n	ma	LMT_MA	N
Demand Limit Switch 1	On/Off		DMD_SW1	N
Demand Limit Switch 2	On/Off		DMD_SW2	N
CCN Loadshed Signal	0 = Normal 1 = Redline 2 = Loadshed		DL_STAT	N
PUMPS				
Cooler Pump Relay	On/Off		COOL_PMP	N
Condenser Pump Relay	On/Off		COND_PMP	N
MISCELLANEOUS				
Dual Setpoint Switch	On/Off		DUAL_IN	N
Cooler Flow Switch	On/Off		COOLFLOW	N
Condenser Flow Switch	On/Off		CONDFLOW	N
Ice Done	Yes/No		ICE	N
Cooler Heater	On/Off		COOL_HTR	N
4-20 ma Cooling Setpoint	nn.n	ma	CSP_IN	N
4-20 ma Heating Setpoint	nn.n	ma	HSP_IN	N

7-DAY_OCC: Occupancy Configuration

DESCRIPTION	STATUS	POINT
Monday Occupied Time	00:00	MON_OCC
Monday Unoccupied Time	00:00	MON_UNC
Tuesday Occupied Time	00:00	TUE_OCC
Tuesday Unoccupied Time	00:00	TUE_UNC
Wednesday Occupied Time	00:00	WED_OCC
Wednesday Unoccupied Time	00:00	WED_UNC
Thursday Occupied Time	00:00	THU_OCC
Thursday Unoccupied Time	00:00	THU_UNC
Friday Occupied Time	00:00	FRI_OCC
Friday Unoccupied Time	00:00	FRI_UNC
Saturday Occupied Time	00:00	SAT_OCC
Saturday Unoccupied Time	00:00	SAT_UNC
Sunday Occupied Time	00:00	SUN_OCC
Sunday Unoccupied Time	00:00	SUN_UNC

APPENDIX G (cont)

ALARMDEF: Alarm Configuration

DESCRIPTION	STATUS	DEFAULT	UNITS	POINT
Alarm Routing Control	00000000	00000000		ALRM_CNT
Equipment Priority	0 to 7	4		EQP_TYPE
Comm Failure Retry Time	1 to 240	10	min	RETRY_TM
Re-alarm Time	1 to 255	30	min	RE-ALARM
Alarm System Name	XXXXXXXX	CHILLER		ALRM_NAM

BRODEFS: Broadcast Configuration

DESCRIPTION	STATUS	DEFAULT	UNITS	POINT
CCN Time/Date Broadcast	Yes/No	No		CCNBC
CCN OAT Broadcast	Yes/No	No		OATBC
Global Schedule Broadcst	Yes/No	No		GSBC
Broadcast Acknowledger	Yes/No	No		CCNBCACK
Daylight Savings Start:				
Month	1 to 12	4		STARTM
Week	1 to 5	1		STARTW
Day	1 to 7	7		STARTD
Minutes to Add	0 to 99	60	min	MINADD
Daylight Savings Stop				
Month	1 to 12	10		STOPM
Week	1 to 5	5		STOPW
Day	1 to 7	7		STOPD
Minutes to Subtract	0 to 99	60	min	MINSUB

DISPLAY: Navigator Configuration

DESCRIPTION	STATUS	DEFAULT	UNITS	POINT
Service Password	nnnn	1111		PASSWORD
Password Enable	Enable/Disable	Enable		PASS_EBL
Metric Display	Off/On	Off		DISPUNIT
Language Selection	0 = ENGLISH 1 = FRANCAIS 2 = ESPANOL 3 = PORTUGUES	0		LANGUAGE

OCCPC01S: Occupancy Configuration

DESCRIPTION	STATUS	UNITS	POINT
Timed Override Hours	0	hours	OVR-EXT
Period 1 DOW (MTWTFSSH)	00000000		DOW1
Occupied from	00:00		OCCTOD1
Occupied to	00:00		UNOCTOD1
Period 2 DOW (MTWTFSSH)	00000000		DOW2
Occupied from	00:00		OCCTOD2
Occupied to	00:00		UNOCTOD2
Period 3 DOW (MTWTFSSH)	00000000		DOW3
Occupied from	00:00		OCCTOD3
Occupied to	00:00		UNOCTOD3
Period 4 DOW (MTWTFSSH)	00000000		DOW4
Occupied from	00:00		OCCTOD4
Occupied to	00:00		UNOCTOD4
Period 5 DOW (MTWTFSSH)	00000000		DOW5
Occupied from	00:00		OCCTOD5
Occupied to	00:00		UNOCTOD5
Period 6 DOW (MTWTFSSH)	00000000		DOW6
Occupied from	00:00		OCCTOD6
Occupied to	00:00		UNOCTOD6
Period 7 DOW (MTWTFSSH)	00000000		DOW7
Occupied from	00:00		OCCTOD7
Occupied to	00:00		UNOCTOD7
Period 8 DOW (MTWTFSSH)	00000000		DOW8
Occupied from	00:00		OCCTOD8
Occupied to	00:00		UNOCTOD8

APPENDIX G (cont)

OPTIONS1: Options Configuration

DESCRIPTION	STATUS	DEFAULT	POINT
Cooler Fluid	1 = Water 2 = Med. Brine 3 = Low Brine	1	FLUIDTYP
Min. Load Valve Select	No/Yes	No	MLV_FLG
Head Press. Control Type	0 = None 1 = Air Cooled 2 = Water Cooled 3 = Common evaporative tower 4 = Independent evaporative tower	0	HEAD_TYP
Var Head Pressure Select	0 = None 1 = 4-20 mA 2 = 0-20 mA 3 = 20-0 mA	0	VHPTYPE
Pressure Transducers	No/Yes	Yes	PRESS_TY
Cooler Pump Control	Off/On	On	CPC
Condenser Pump Interlock	Off/On	Off	CND_LOCK
Condenser Pump Control	0 = Not Controlled 1 = On when STATE is On 2 = On when compressors are On	0	CNPC
Condenser Fluid Sensors	No/Yes	No	CD_TEMP
Level Sensor Enable	Disable/Enable	Enable	LVL_ENA
EMM Module Installed	No/Yes	No	EMM_BRD

OPTIONS2: Options Configuration

DESCRIPTION	STATUS	DEFAULT	UNITS	POINT
Control Method	0 = Switch 1 = 7 day sched. 2 = Occupancy 3 = CCN	0		CONTROL
Loading Sequence Select	1 = Equal loading 2 = Staged loading	1		SEQ_TYPE
Lead/Lag Sequence Select	1 = Automatic 2 = Circuit A leads 3 = Circuit B leads	1		LEAD_TYP
Compressor Sequence	1 = Automatic 2 = Compressor 1 Leads 3 = Compressor 2 Leads	1		COMP_SEQ
Cooling Setpoint Select	0 = Single 1 = Dual, remote switch controlled 2 = Dual, 7 day clock controlled 3 = Dual, CCN occupancy controlled 4 = 4-20 mA input	0		CLSP_TYP
Heating Setpoint Select	0 = Single 1 = Dual, remote switch controlled 2 = Dual, 7 day clock controlled 3 = Dual, CCN occupancy controlled 4 = 4-20 mA input	0		HTSP_TYP
Ramp Load Select	Enable/Disable	Enable		RAMP_EBL
Heat Cool Select	Cool	Cool		HEATCOOL
High LCW Alert Limit	2 to 60	60.0	ΔF	LCW_LMT
Minutes off time	0 to 15	0	min	DELAY
Deadband Multiplier	1.0 to 4.0	2.0		Z_GAIN
Close Control Select	Disable/Enable	Disable		CLS_CTRL
Ice Mode Enable	Disable/Enable	Disable		ICE_CNFG
Current Unbalance SetPnt	10 to 25	10	%	CUR_TRIP
Enable Noflow Detection	Disable/Enable	Enable		NOFLOWEN
Winterize Alert Config	Disable/Enable	Enable		WINTMSC
Alarm Relay Usage	0 = Alerts and Alarms 1 = Alarms Only 2 = Off	0		ALRMCNFG

APPENDIX G (cont)

RESETCON: Options Configuration

DESCRIPTION	STATUS	DEFAULT	UNITS	POINT
COOLING RESET				
Cooling Reset Type	0 = No Reset 1 = 4 to 20 mA Input 2 = External Temp — OAT 3 = Return Fluid 4 = External Temp — SPT	0		CRST_TYP
4-20 MA RESET				
4-20 — Degrees Reset	–30 to +30	0	^F	C420_DEG
REMOTE RESET				
Remote — No Reset Temp	0 to 125	125	dF	CREM_NO
Remote — Full Reset Temp	0 to 125	0	dF	CREM_FUL
Remote — Degrees Reset	–30 to +30	0	^F	CREM_DEG
RETURN TEMPERATURE RESET				
Return — No Reset Temp	0 to 30	10	^F	CRTN_NO
Return — Full Reset Temp	0 to 10	0	^F	CRTN_FUL
Return — Degrees Reset	–30 to +30	0	^F	CRTN_DEG
HEATING RESET				
Heating Reset Type	0 = No Reset 1 = 4 to 20 mA Input 2 = External Temp — OAT 3 = Return Fluid 4 = External Temp — SPT	0		HRST_TYP
4-20 MA RESET				
4-20 — Degrees Reset	–30 to +30	0	^F	H420_DEG
REMOTE RESET				
Remote — No Reset Temp	0 to 125	50	dF	HREM_NO
Remote — Full Reset Temp	0 to 125	80	dF	HREM_FUL
Remote — Degrees Reset	–30 to +30	0	^F	HREM_DEG
RETURN TEMPERATURE RESET				
Return — No Reset Temp	0 to 10	10	^F	HRTN_NO
Return — Full Reset Temp	0 to 30	0	^F	HRTN_FUL
Return — Degrees Reset	–30 to +30	0	^F	HRTN_DEG
DEMAND LIMIT				
Demand Limit Select	0 = None 1 = External Switch Input 2 = 4 to 20 mA Input 3 = Loadshed	0		DMD_CTRL
Demand Limit at 20 mA	0 to 100	100	%	DMT20MA
Loadshed Group Number	0 to 99	0		SHED_NUM
Loadshed Demand Delta	0 to 60	0	%	SHED_DEL
Maximum Loadshed Time	0 to 120	60	min	SHED_TIM
Demand Limit Switch 1	0 to 100	80	%	DLSWSP1
Demand Limit Switch 2	0 to 100	50	%	DLSWSP2
LEAD/LAG				
Lead/Lag Chiller Enable	Disable/Enable	Disable		LL_ENA
Master/Slave Select	Slave/Master	Master		MS_SEL
Slave Address	0 to 239	2		SLV_ADDR
Lead/Lag Balance Select	0 = None 1 = Slave Leads 2 = Automatic	0		LL_BAL
Lead/Lag Balance Delta	40 to 400	168	hours	LL_BAL_D
Lag Start Delay	0 to 30	5	min	LL_DELAY
Parallel Configuration	Yes/No	No		PARALLEL

SCHEDOVR: Schedule and Timed Override Configuration

DESCRIPTION	STATUS	DEFAULT	UNITS	POINT
Schedule Number	0 - 99	0		SCHEDNUM
Override Time Limit	0 - 4	0	hours	OTL
Timed Override Hours	0 - 4	0	hours	OVR_EXT
Timed Override	Yes/No	No		TIMEOVER

APPENDIX G (cont)

SETPOINT: Configuration

DESCRIPTION	STATUS	DEFAULT	UNITS	POINT
COOLING				
Cool Setpoint 1	–20 to 70	44.0	°F	CSP1
Cool Setpoint 2	–20 to 70	44.0	°F	CSP2
Ice Setpoint	–20 to 32	32.0	°F	CSP3
HEATING				
Heat Setpoint 1	80 to 140	100.0	°F	HSP1
Heat Setpoint 2	80 to 140	100.0	°F	HSP2
RAMP LOADING				
Cooling Ramp Loading	0.2 to 2.0	1.0		CRAMP
Heating Ramp Loading	0.2 to 2.0	1.0		HRAMP
HEAD PRESSURE				
Head Pressure Setpoint A	80 to 140	113	°F	HSP_A
Head Pressure Setpoint B	80 to 140	113	°F	HSP_B
LIQUID LEVEL				
Liquid Level Setpoint A	0.0 to 3.0	1.8		LVL_SPA
Liquid Level Setpoint B	0.0 to 3.0	1.8		LVL_SPB

UNIT: Base Unit Configuration

DESCRIPTION	STATUS	DEFAULT	UNITS	POINT
Unit Type	1 = Air Cooled 2 = Water Cooled 3 = Split System 4 = Heat Machine 5 = Air Cooled Heat Reclaim	1		UNIT_TYP
Unit Size	76 to 350	76	TONS	SIZE
Circuit A % Capacity	0 to 100	50	%	CIRCACAP
Number Circ A Compressor	1 to 2	1		NUMCA
Number Circ B Compressor	0 to 2	1		NUMCB
Discharge Super. Setpoint	10 to 40	22.0	°F	DSH_SP
EXV Circ. A Min Position	0 to 100	8.0	%	EXVAMINP
EXV Circ. B Min Position	0 to 100	8.0	%	EXVBMINP
Fan Staging Select	1 to 8	1		FAN_TYPE
Compr. A1 Must Trip Amps	10 to 560	0		CA1_MTA
Compr. A2 Must Trip Amps	10 to 560	0		CA2_MTA
Compr. B1 Must Trip Amps	10 to 560	0		CB1_MTA
Compr. B2 Must Trip Amps	10 to 560	0		CB2_MTA

NOTE: This table is for display only and cannot be modified.

SERVICE: Configuration

DESCRIPTION	STATUS	DEFAULT	UNITS	POINT
PID GAINS				
Head Pressure P Gain	–20.0 to +20.0	1.0		HD_PGAIN
Head Pressure I Gain	–20.0 to +20.0	0.1		HD_IGAIN
Head Pressure D Gain	–20.0 to +20.0	0.0		HD_DGAIN
Water Valve Minimum Pos.	0 to 100	20	%	HD_MIN
MISCELLANEOUS				
Motor Temp Setpoint	120.0 to 240.0	200.0	°F	MTR_T_SP
Brine Freeze Point	–20.0 to 34.0	34.0	°F	BRN_FRZ
COMPRESSOR ENABLE				
Enable Compressor A1	Enable/Dsable	Enable		ENABLEA1
Enable Compressor A2	Enable/Dsable	Enable		ENABLEA2
Enable Compressor B1	Enable/Dsable	Enable		ENABLEB1
Enable Compressor B2	Enable/Dsable	Enable		ENABLEB2

APPENDIX G (cont)

ALARMS: Maintenance Display

DESCRIPTION	STATUS	POINT
Active Alarm #1	Axxx or Txxx	ALARM01C
Active Alarm #2	Axxx or Txxx	ALARM02C
Active Alarm #3	Axxx or Txxx	ALARM03C
Active Alarm #4	Axxx or Txxx	ALARM04C
Active Alarm #5	Axxx or Txxx	ALARM05C
Active Alarm #6	Axxx or Txxx	ALARM06C
Active Alarm #7	Axxx or Txxx	ALARM07C
Active Alarm #8	Axxx or Txxx	ALARM08C
Active Alarm #9	Axxx or Txxx	ALARM09C
Active Alarm #10	Axxx or Txxx	ALARM10C
Active Alarm #11	Axxx or Txxx	ALARM11C
Active Alarm #12	Axxx or Txxx	ALARM12C
Active Alarm #13	Axxx or Txxx	ALARM13C
Active Alarm #14	Axxx or Txxx	ALARM14C
Active Alarm #15	Axxx or Txxx	ALARM15C
Active Alarm #16	Axxx or Txxx	ALARM16C
Active Alarm #17	Axxx or Txxx	ALARM17C
Active Alarm #18	Axxx or Txxx	ALARM18C
Active Alarm #19	Axxx or Txxx	ALARM19C
Active Alarm #20	Axxx or Txxx	ALARM20C
Active Alarm #21	Axxx or Txxx	ALARM21C
Active Alarm #22	Axxx or Txxx	ALARM22C
Active Alarm #23	Axxx or Txxx	ALARM23C
Active Alarm #24	Axxx or Txxx	ALARM24C
Active Alarm #25	Axxx or Txxx	ALARM25C

CURRMODS: Maintenance Display

DESCRIPTION	STATUS	POINT
CSM controlling Chiller	ON/OFF	MODE_1
WSM controlling Chiller	ON/OFF	MODE_2
Master/Slave control	ON/OFF	MODE_3
Low Source Protection	ON/OFF	MODE_4
Ramp Load Limited	ON/OFF	MODE_5
Timed Override in effect	ON/OFF	MODE_6
Low Cooler Suction TempA	ON/OFF	MODE_7
Low Cooler Suction TempB	ON/OFF	MODE_8
Slow Change Override	ON/OFF	MODE_9
Minimum OFF time active	ON/OFF	MODE_10
Low Dischrge Superheat A	ON/OFF	MODE_11
Low Dischrge Superheat B	ON/OFF	MODE_12
Dual Setpoint	ON/OFF	MODE_13
Temperature Reset	ON/OFF	MODE_14
Demand Limit in effect	ON/OFF	MODE_15
Cooler Freeze Prevention	ON/OFF	MODE_16
Lo Tmp Cool/Hi Tmp Heat	ON/OFF	MODE_17
Hi Tmp Cool/Lo Tmp Heat	ON/OFF	MODE_18
Making ICE	ON/OFF	MODE_19
Storing ICE	ON/OFF	MODE_20
High SCT Circuit A	ON/OFF	MODE_21
High SCT Circuit B	ON/OFF	MODE_22
High Motor Current Cir. A	ON/OFF	MODE_23
High Motor Current Cir. B	ON/OFF	MODE_24
CKT A Off Ref Flow Delay	ON/OFF	MODE_25
CKT B Off Ref Flow Delay	ON/OFF	MODE_26
Circuit A — Pumping out	ON/OFF	MODE_27
Circuit B — Pumpout out	ON/OFF	MODE_28

APPENDIX G (cont)

DUALCHIL: Maintenance Display

DESCRIPTION	STATUS	UNITS	POINT
Dual Chiller Link Good ?	Yes/No		DC_LINK
Master Chiller Role	STAND ALONE, Lead Chiller, Lag Chiller		MC_ROLE
Slave Chiller Role	STAND ALONE, Lead Chiller, Lag Chiller		SC_ROLE
Lead Chiller Ctrl Point	snnn.n	dF	LEAD_CP
Lag Chiller Ctrl Point	snnn.n	dF	LAG_CP
Control Point	snnn.n	dF	CTRL_PNT
Cool EnteringFluid-Slave	snnn.n	dF	COOLEWTS
Cool Leaving Fluid-Slave	snnn.n	dF	COOLLWTS
Cooler Entering Fluid	snnn.n	dF	COOL_EWT
Cooler Leaving Fluid	snnn.n	dF	COOL_LWT
Lead/Lag Leaving Fluid	snnn.n	dF	DUAL_LWT
Percent Avail.Capacity	0-100	%	CAP_A
Percent Avail.Cap.Slave	0-100	%	CAP_A_S
Lag Start Delay Time	hh:mm		LAGDELAY
Load/Unload Factor	snnn.n		SMZ
Load/Unload Factor-Slave	snnn.n		SMZSLAVE
Lead SMZ Clear Commanded	Yes/No		LEADSMZC
Lag- SMZ Clear Commanded	Yes/No		LAG_SMZC
Lag Commanded Off?	Yes/No		LAG_OFF
Dual Chill Lead CapLimit	0-100	%	DCLDCAPL
Dual Chill Lag CapLimit	0-100	%	DCLGCAPL

LOADFACT: Maintenance Display

DESCRIPTION	STATUS	UNITS	POINT
CAPACITY CONTROL			
Load/Unload Factor	snnn.n	%	SMZ
Control Point	snnn.n	°F	CTRL_PNT
Leaving Fluid Temp	snnn.n	°F	LWT
Calculated Z factor	n.n		Z_CALC
CAPACITY TRANS, STATE	n		CAP_TRAN

APPENDIX G (cont)

MISCDATA: Maintenance Display

DESCRIPTION	STATUS	UNITS	POINT
MISCELLANEOUS			
Liquid Level Control Pt.	n.nn	—	LVLACTRL
Liquid Level Sensor A	snnn.n		TLEV_A
Liquid Level Control Pt.	n.nn	—	LVLBCTRL
Liquid Level Sensor B	snnn.n		TLEV_B
Options Temp 1, EXV AN2	snnn.n	°F	OPT_TMP1
Options Temp 2, EXV AN1	snnn.n	°F	OPT_TMP2
Options Temp 3, SCB AN9	snnn.n	°F	OPT_TMP3
Options Temp 4, SCB AN10	snnn.n	°F	OPT_TMP4
Options Current 1	nn.n	ma	OPT_CUR1
Options Current 2	nn.n	ma	OPT_CUR2
Pumpout Failure Count, A	nnn	—	PFAIL_A
Pumpout Failure Count, B	nnn	—	PFAIL_B

OCCDEFM: Occupancy Maintenance Display

DESCRIPTION	STATUS	POINT
Current Mode (1=Occup.)	0,1	MODE
Current Occup. Period #	0-8	PER-NO
Timed-Override in Effect	Yes/No	OVERLAST
Time-Override Duration	0-4 hours	OVR_HRS
Current Occupied Time	hh:mm	STRTTIME
Current Unoccupied Time	hh:mm	ENDTIME
Next Occupied Day		NXTOCDAY
Next Occupied Time	hh:mm	NXTOCTIM
Next Unoccupied Day		NXTUNDAY
Next Unoccupied Time	hh:mm	NXTUNTIM
Previous Unoccupied Day		PRVUNDAY
Previous Unoccupied Time	hh:mm	PRVUNTIM

OILPRESS: Maintenance Display

DESCRIPTION	STATUS	UNITS	POINT
A1 Oil Pressure	snnn.n	PSIG	OP_A1
A2 Oil Pressure	snnn.n	PSIG	OP_A2
B1 Oil Pressure	snnn.n	PSIG	OP_B1
B2 Oil Pressure	snnn.n	PSIG	OP_B2
A1 Oil Filter Diff. Press	nnn.n	PSI	FLTP_A1
A2 Oil Filter Diff. Press	nnn.n	PSI	FLTP_A2
B1 Oil Filter Diff. Press	nnn.n	PSI	FLTP_B1
B2 Oil Filter Diff. Press	nnn.n	PSI	FLTP_B2
OIL PRESSURE SETPOINTS			
Calculated Oil Press A1	nn.n	PSI	OIL_SPA1
Calculated Oil Press A2	nn.n	PSI	OIL_SPA2
Calculated Oil Press B1	nn.n	PSI	OIL_SPB1
Calculated Oil Press B2	nn.n	PSI	OIL_SPB2
MAX OPERATING PRESSURE			
Calculated MOP Circuit A	nn.n	°F	MOP_SPA
Calculated MOP Circuit B	nn.n	°F	MOP_SPB

APPENDIX G (cont)

STRTABS: Maintenance Display

DESCRIPTION	STATUS	UNITS	POINT
Machine Operating Hours	nnnnnn	hours	ABS_HRM
Machine Starts	nnnnnn		
Circuit A Run Hours	nnnnnn	hours	ABS_CYM
Compressor A1 Run Hours	nnnnnn	hours	ABS_HRA1
Compressor A2 Run Hours	nnnnnn	hours	ABS_HRA2
Circuit B Run Hours	nnnnnn	hours	ABS_HRB
Compressor B1 Run Hours	nnnnnn	hours	ABS_HRB1
Compressor B2 Run Hours	nnnnnn	hours	ABS_HRB2
Circuit A Starts	nnnnnn		ABS_CYA
Compressor A1 Starts	nnnnnn		ABS_CYA1
Compressor A2 Starts	nnnnnn		ABS_CYA2
Circuit B Starts	nnnnnn		ABS_CYB
Compressor B1 Starts	nnnnnn		ABS_CYB1
Compressor B2 Starts	nnnnnn		ABS_CYB2

STRTHOUR: Maintenance Display

DESCRIPTION	STATUS	UNITS	POINT
Machine Operating Hours	nnnnnn	hours	HR_MACH
Machine Starts	nnnnnn		CY_MACH
Circuit A Run Hours	nnnnnn	hours	HR_CIRA
Compressor A1 Run Hours	nnnnnn	hours	HR_A1
Compressor A2 Run Hours	nnnnnn	hours	HR_A2
Circuit B Run Hours	nnnnnn	hours	HR_CIRB
Compressor B1 Run Hours	nnnnnn	hours	HR_B1
Compressor B2 Run Hours	nnnnnn	hours	HR_B2
Circuit A Starts	nnnnnn		CY_CIRA
Compressor A1 Starts	nnnnnn		CY_A1
Compressor A2 Starts	nnnnnn		CY_A2
Circuit B Starts	nnnnnn		CY_CIRB
Compressor B1 Starts	nnnnnn		CY_B1
Compressor B2 Starts	nnnnnn		CY_B2

APPENDIX G (cont)

TESTMODE: Maintenance Display

DESCRIPTION	STATUS	UNITS	POINT
Service Test Mode	On/Off		MAN_CTRL
Manual Control Override	On/Off		FAC_CTRL
Compressor A1 Relay	On/Off		S_A1_RLY
Compressor A2 Relay	On/Off		S_A2_RLY
Compressor B1 Relay	On/Off		S_B1_RLY
Compressor B2 Relay	On/Off		S_B2_RLY
Loader A1 Relay	On/Off		S_LDR_A1
Loader A2 Relay	On/Off		S_LDR_A2
Loader B1 Relay	On/Off		S_LDR_B1
Loader B2 Relay	On/Off		S_LDR_B2
Oil Solenoid A1	On/Off		S_OSL_A1
Oil Solenoid A2	On/Off		S_OSL_A2
Oil Solenoid B1	On/Off		S_OSL_B1
Oil Solenoid B2	On/Off		S_OSL_B2
Motor Coolng A1 Solenoid	On/Off		S_MCS_A1
Motor Coolng A2 Solenoid	On/Off		S_MCS_A2
Motor Coolng B1 Solenoid	On/Off		S_MCS_B1
Motor Coolng B2 Solenoid	On/Off		S_MCS_B2
FAN 1 Relay	On/Off		S_FAN_1
FAN 2 Relay	On/Off		S_FAN_2
FAN 3 Relay	On/Off		S_FAN_3
FAN 4 Relay	On/Off		S_FAN_4
Oil Heater	On/Off		S_OHTR_A
Oil Heater	On/Off		S_OHTR_B
Oil Pump	On/Off		S_OPMP_A
Oil Pump	On/Off		S_OPMP_B
Cooler Pump Relay	On/Off		S_CL_PMP
Condenser Pump Relay	On/Off		S_CN_PMP
Minimum Load Valve	On/Off		S_MLV
Cooler Heater	On/Off		S_CHTR
Remote Alarm Relay	On/Off		S_ALRM
EXV % OPEN	0-100	%	S_EXV_A
EXV % OPEN	0-100	%	S_EXV_B
Var Head Press %	0-100	%	S_VHPA
Var Head Press %	0-100	%	S_VHPB

VERSIONS: Maintenance Display

DESCRIPTION	VERSION	STATUS
MBB	CESR131248-	nn-nn
EXV	CESR131172-	nn-nn
EMM	CESR131174-	nn-nn
SCB	CESR131226-	nn-nn
TI CCP 1	100233-1R3-	nn-nn
TI CCP 2	100233-1R3-	nn-nn
NAVIGATOR	CESR130227-	nn-nn

APPENDIX G (cont)

WINTLOG: Maintenance Display

DESCRIPTION	STATUS	POINT
Winterization Performed	No	WINTDONE
Date Winterized	00/00/00 00:00	WMSG00
Date Winterized	00/00/00 00:00	WMSG01
Date Winterized	00/00/00 00:00	WMSG02
Date Winterized	00/00/00 00:00	WMSG03
Date Winterized	00/00/00 00:00	WMSG04
Date Winterize Alerted	00/00/00 00:00	WALRT00
Date Winterize Alerted	00/00/00 00:00	WALRT01
Date Winterize Alerted	00/00/00 00:00	WALRT02
Date Winterize Alerted	00/00/00 00:00	WALRT03
Date Winterize Alerted	00/00/00 00:00	WALRT04
Date Winter Configured	00/00/00 00:00	WCONF00
Date Winter Unconfigured	00/00/00 00:00	WUCONF00
Date Winter Configured	00/00/00 00:00	WCONF01
Date Winter Unconfigured	00/00/00 00:00	WUCONF01
Date Winter Configured	00/00/00 00:00	WCONF02
Date Winter Unconfigured	00/00/00 00:00	WUCONF02

WSMDEFME: WSM Maintenance Display

DESCRIPTION	STATUS	POINT
WSM Active?	Yes/No	WSMSTAT
Chilled water temp	snn.n °F	CHWTEMP
Equipment status	On/Off	CHLRST
Commanded state	Enable/Disable/None	CHLRENA
CHW setpoint reset value	nn.n ^F	CHWRVAL
Current CHW setpoint	snn.n °F	CHWSTPT

APPENDIX H

30GXN,R Duplex Combinations

SIZE	MODULE A	MODULE B
220 (50 Hz only)	125	090
240 (50 Hz only)	125	115
275 (50 Hz only)	135	135
283 (60 Hz & 50 Hz)	153	138
300 (50 Hz only)	160	135
303 (60 Hz & 50 Hz)	163	138
320 (50 Hz only)	160	160
328 (60 Hz & 50 Hz)	178	153
345 (50 Hz only)	175	175
353 (60 Hz & 50 Hz)	178	178
365 (50 Hz only)	250	135
370 (60 Hz only)	225	150
373 (60 Hz & 50 Hz)	253	138
390 (60 Hz only)	264	135
393 (60 Hz & 50 Hz)	253	153
395 (50 Hz only)	264	135
410 (50 Hz only)	225	205
415 (60 Hz only)	264	160
418 (60 Hz & 50 Hz)	268	153
440 (50 Hz only)	225	225
450 (60 Hz only)	225	225
453 (60 Hz & 50 Hz)	228	228
470 (50 Hz only)	250	225
475 (60 Hz only)	249	225
478 (60 Hz & 50 Hz)	253	228
495 (50 Hz only)	250	250
500 (60 Hz only)	249	249
503 (60 Hz & 50 Hz)	253	253
520 (50 Hz only)	264	264
525 (60 Hz only)	264	264
528 (60 Hz & 50 Hz)	268	268

Motormaster V (MMV) is a Variable Frequency Drive (VFD) that varies the condenser fan speed. The speed varies in proportion to a 4 to 20 mA signal produced by the *Comfort*Link™ controls. The MMV output speed is displayed in Hz.

Configuration:

The MMV is configured for 1 of 12 operation modes based on the inputs to the control terminal block. 30GXN,R units use operating modes 5-8. In these configurations, the MMV follows a 4 to 20 mA speed reference signal present on terminals 25 (+) and 2 (–). One additional jumper is required to configure the drive for 50/60 Hz operation and input voltage. See Table 1 below for proper inputs. Once the drive is powered, it will change to the mode selected according to the inputs. No additional programming is required.

Drive Programming:

⚠ CAUTION

It is strongly recommended that the user NOT change any programming without consulting Carrier service personnel. Unit damage may occur from improper programming.

To enter password and change program values:

Press **Mode**.

Upper right decimal point blinks.

Display reads “00”.

To enter the PROGRAM mode to access the parameters, press the **Mode** button. This will activate the PASSWORD prompt (if the password has not been disabled). The display will read “00” and the upper right-hand decimal point will be blinking.

Use the ▲ and ▼ buttons to scroll to the password value (the factory default password is “111”) and press the **Mode** button. Once the correct password value is entered, the display will read “P01,” which indicates that the PROGRAM mode has been accessed at the beginning of the parameter menu (P01 is the first parameter).

NOTE: If the display flashes “Er”, the password was incorrect, and the process to enter the password must be repeated.

Press **Mode** to display present parameter setting.

Upper right decimal point blinks.

Use ▲ and ▼ to scroll to the desired parameter number.

Use the ▲ and ▼ buttons to scroll to the desired parameter number.

Once the desired parameter number is found, press the **Mode** button to display the present parameter setting. The upper right-hand decimal point will begin blinking, indicating that the present parameter setting is being displayed, and that it can be changed by using the up and down buttons.

Use ▲ and ▼ to change setting.

Press **Mode** to store new setting.

Pressing the **Mode** will store the new setting and also exit the PROGRAM mode. To change another parameter, press the **Mode** key again to re-enter the PROGRAM mode (the parameter menu will be accessed at the parameter that was last viewed or changed before exiting). If the **Mode** key is pressed within two minutes of exiting the PROGRAM mode, the password is not required access the parameters. After two minutes, the password must be entered in order to access the parameters again.

To change password: first enter the current password then change parameter P44 to the desired password.

To reset factory defaults: change P48 to one of the 4 operating modes (5-8) and then cycle power.

Table 2 shows all program parameters for each of the 4 operating modes.

EPM chip:

This drive uses a removable EPM chip to store program parameters. It should not be removed with power applied to the VFD.

Table 1: Configuration Tables

MODE	NOM VOLTAGE	Hz	CONTROL INPUT (pins 25, 2)	START JUMPER
5	208/230/460/575*	60	External control 4-20 mA	TB1-TB2
6	208/380	60	External control 4-20 mA	TB13A-TB2
7	230	50	External control 4-20 mA	TB13B-TB2
8	380/415	50	External control 4-20 mA	TB13C-TB2

*208 v can run in mode 5 or 6.

APPENDIX I (cont)

Table 2: Program Parameters for the 4 Operating Modes:

PARAMETER NUMBER	DESCRIPTION	OPERATING MODES			
		Group 5	Group 6	Group 7	Group 8
P01	Line Voltage: 01 = low line, 02 = high line	01	02	01	02
P02	Carrier Freq: 01 = 4 kHz, 02 = 6 kHz, 03 = 8 kHz	01	01	01	01
P03	Startup mode: flying restart	06	06	06	06
P04	Stop mode: coast to stop	01	01	01	01
P05	Standard Speed source: 04 = 4-20 ma, 05 = R22, 06 = R134a	04	04	04	04
P06	TB-14 output: 01 = none	01	01	01	01
P08	TB-30 output: 01 = none	01	01	01	01
P09	TB-31 output: 01 = none	01	01	01	01
P10	Tb-13A function sel: 01 = none	01	01	01	01
P11	Tb-13B function sel: 01 = none	01	01	01	01
P12	Tb-13C function sel: 01 = none	01	01	01	01
P13	Tb-15 output: 01 = none	01	01	01	01
P14	Control: 01 = Terminal strip	01	01	01	01
P15	Serial link: 02 = enabled 9600,8,N,2 w/timer	02	02	02	02
P16	Units editing: 02 = whole units	02	02	02	02
P17	Rotation: 01 = forward only, 03 = reverse only	01	01	01	01
P19	Acceleration time: 10 sec	10	10	10	10
P20	Deceleration time: 10 sec	10	10	10	10
P21	Dc brake time: 0	0	0	0	0
P22	DC BRAKE VOLTAGE 0%	0	0	0	0
P23	Min freq = 8 hz ~ 100 – 160 rpm	8	8	8	8
P24	Max freq	60	60	50	50
P25	Current limit:	125	125	110	110
P26	Motor overload: 100	100	100	100	100
P27	Base freq: 60 or 50 Hz	60	60	50	50
P28	Fixed boost: 0.5 % at low frequencies	0.5	0.5	0.5	0.5
P29	Accel boost: 0%	0	0	0	0
P30	Slip compensation: 0%	0	0	0	0
P31	Preset spd #1: 0	57	57	47	47
P32	Preset spd #2: 0	0	0	0	0
P33	Preset spd #3: 0	0	0	0	0
P34	Preset spd 4 default - R22 setpoint, TB12-2 open	18.0	18.0	18.0	18.0
P35	Preset spd 5 default - R134a setpoint, TB12-2 closed	12.6	12.6	12.6	12.6
P36	Preset spd 6 default	0	0	0	0
P37	Preset spd 7 default	0	0	0	0
P38	Skip bandwidth	0	0	0	0
P39	Speed scaling	0	0	0	0
P40	Frequency scaling 50 or 60 Hz	60	60	50	50
P41	Load scaling: default (not used so NA)	200	200	200	200
P42	Accel/decel #2: default (not used so NA)	60	60	60	60
P43	Serial address	1	1	1	1
P44	Password:111	111	111	111	111
P45	Speed at min signal: 8 HZ used when PID disabled and 4-20ma input	8	8	8	8
P46	Speed at max feedback: 60 or 50 HZ. Used when PID disabled and 4-20ma input	60	60	50	50
P47	Clear history? 01 = maintain, (set to 00 to clear)	01	01	01	01
P48	Program selection: Mode 1 - 12	05	06	07	08
P61	PI Mode: 05 = reverse, 0-5V, 01 = no PID	01	01	01	01
P62	Min feedback = 0 (0V *10)	0	0	0	0
P63	Max feedback = 50 (5V * 10)	50	50	50	50
P64	Proportional gain = 4%	4	4	4	4
P65	Integral gain = .2	.2	.2	.2	.2
P66	PI acell/decel (setpoint change filter) = 5	5	5	5	5
P67	Min alarm	0	0	0	0
P68	Max alarm	0	0	0	0

Troubleshooting:

Troubleshooting the Motormaster® V control requires a combination of observing system operation and VFD display information. The MMV should follow the 4-20 mA signal from the *Comfort*Link™ controls.

The speed command from the *Comfort*Link controls can be monitored in 2 ways:

1. Variables VH.PA, VH.PB in the "outputs" submenu of *Comfort*Link — given as a percentage of 4 to 20 mA range.
2. P56 in Motormaster V shows 4-20 mA input in percent of maximum input.

Due to the variable definitions of each controller, Table 3 shows a cross-reference:

Table 3: Controller Cross-Reference

CONTROL SIGNAL	VH.PA, VH.PB (*Comfort*Link)	4-20mA Input (P56, Motormaster V)	VFD Speed (P71, Motormaster V)
4 ma	0%	20%	8Hz
12 ma	50%	60%	26Hz
20 ma	100%	100%	60Hz

The MMV also provides real time monitoring of key inputs and outputs. The collective group is displayed through parameters 50-56 and all values are read only.

- **P50 FAULT HISTORY —** Last 8 faults
- **P51: SOFTWARE version**
- **P52: DC BUS VOLTAGE —** in percent of nominal. Usually rated input voltage x 1.4.
- **P53: MOTOR VOLTAGE —** in percent of rated output voltage
- **P54: LOAD —** in percent of drives rated output current rating
- **P55: VDC INPUT —** in percent of maximum input: 50 will indicate full scale which is 5 v
- **P56: 4-20 mA INPUT —** in percent of maximum input: 20% = 4 mA, 100% = 20 mA

Fault codes:

The drive is programmed to automatically restart after a fault and will attempt to restart three times after a fault (the drive will not restart after CF, cF, GF, F1, F2-F9, or Fo faults). If all three restart attempts are unsuccessful, the drive will trip into FAULT LOCKOUT (LC), which requires a manual reset.

To disable external control mode (5-8) and enter manual speed control mode:

Change P05 to '01-key pad'

Push ▲ and ▼ arrow key to set manual speed.

To provide manual start/stop control:

Remove start command jumper and install a switch between the appropriate start terminals.

Loss of CCN communications:

CCN communications with external control systems can be affected by high frequency electrical noise generated by Motormaster V control. Ensure unit is well grounded to eliminate ground currents along communication lines.

If communications are lost only while Motormaster V control is in operation, order a signal isolator/repeater (CEAS420876-2) and power supplies (CEAS221045-01, 2 required) for the CCN communication line.

FAULT CODES PROBLEM	DESCRIPTION	SOLUTION
AF	High Temperature Fault: Ambient temperature is too high; Cooling fan has failed (if equipped).	Check cooling fan operation.
CF	Control Fault: A blank EPM, or an EPM with corrupted data has been installed.	Perform a factory reset using Parameter 48 — PROGRAM SELECTION. See programming section above.
cF	Incompatibility Fault: An EPM with an incompatible parameter version has been installed.	Either remove the EPM or perform a factory reset (Parameter 48) to change the parameter version of the EPM to match the parameter version of the drive.
GF	Data Fault: User data and OEM defaults in the EPM are corrupted.	Restore factory defaults by toggling P48 to another mode. Then set P48 to desired mode to restore all defaults for that mode. See programming section above. If that doesn't work, replace EPM.
HF	High DC Bus Voltage Fault: Line voltage is too high; Deceleration rate is too fast; Overhauling load.	Check line voltage — Set P01 appropriately.
JF	Serial Fault: The watchdog timer has timed out, indicating that the serial link has been lost.	Check serial connection (computer). Check settings for P15. Check settings in communication software to match P15.
LF	Low DC Bus Voltage Fault: Line voltage is too low.	Check line voltage — set P01 appropriately.
OF	Output Transistor Fault: Phase to phase or phase to ground short circuit on the output; Failed output transistor; Boost settings are too high; Acceleration rate is too fast.	Reduce boost or increase acceleration values. If unsuccessful, replace drive.
PF	Current Overload Fault: VFD is undersized for the application; Mechanical problem with the driven equipment.	Check line voltage — set P01 appropriately. Check for dirty coils. Check for motor bearing failure.
SF	Single-phase Fault: Single-phase input power has been applied to a three-phase drive.	Check input power phasing.
F1	EPM Fault: The EPM is missing or damaged.	
F2 - F9, Fo	Internal Faults: The control board has sensed a problem	Consult factory.
Drive display = '---' even though drive should be running	Start jumper is missing	Replace start jumper. See configuration section.
Drive display = 8.0 Hz even though fan should be running faster	Control signal is a 4mA	Saturated condensing temperature is below setpoint in *Comfort*Link.
Unknown problem	Restore factory defaults	Restore factory defaults by toggling P48 to another mode. Then set P48 to desired mode to restore all defaults for that mode. See programmming section above. This will override all previous user inputs.
VFD flashes 57 (or 47) and LCS	Speed signal lost. Drive will operate at 57 (or 47) Hz until reset or loss of start command. Resetting requires cycling start command (or power).	In stand alone mode: In external control mode (30GXN,R) check wiring from unit controls J8 for 4-20 mA signal. Drive runs at 57 Hz in modes 5, 6 and 47 Hz in modes 7, 8.

30 Series Screw Liquid Chiller Maintenance Data Log

PLANT _____ **CHILLER MODEL NO.** _____ **CHILLER SERIAL NO.** _____

Operator Initials	Circuit	% Capacity Per Circuit	COOLER									CONDENSER							COMPRESSOR				
			Refrigerant					Water				Refrigerant		Water Cooled				Air Cooled	Discharge Gas Temp.		Oil		Motor
								Pressure		Temp.				Pressure		Temp.							
Date/ Time			Suction Pressure	Sat. Suct. Temp	Econ. Press.	Cooler Level	EXV Pos	In	Out	In	Out	Discharge Pressure	Sat. Cond. Temp	In	Out	In	Out	Outside Air Temp			Oil Pressure Diff.	Oil Pressure	Temp.
	A																			A1			
																				A2			
	B																			B1			
																				B2			
	A																			A1			
																				A2			
	B																			B1			
																				B2			
	A																			A1			
																				A2			
	B																			B1			
																				B2			
	A																			A1			
																				A2			
	B																			B1			
																				B2			
	A																			A1			
																				A2			
	B																			B1			
																				B2			
	A																			A1			
																				A2			
	B																			B1			
																				B2			
	A																			A1			
																				A2			
	B																			B1			
																				B2			

REMARKS: Indicate start counts, operating hours, shutdowns on safety controls, repairs made, oil or refrigerant added or removed (include amounts).

_____

_____

_____

_____

Copyright 2002 Carrier Corporation

Manufacturer reserves the right to discontinue, or change at any time, specifications or designs without notice and without incurring obligations.

CUT ALONG DOTTED LINE

CUT ALONG DOTTED LINE

START-UP CHECKLIST FOR 30GX,HX LIQUID CHILLER

I. Project Information

Job Name _____

Address _____

City _____ State _____ Zip _____

Installing Contractor _____

Sales Office _____

Start-up Performed By _____

Design Information

	Capacity	EWT	LWT	Fluid Type	Flow Rate	P.D.	Ambient
Cooler							
Condenser							

Equipment

Model _____ Serial _____

Compressors

A1) Model _____ Serial _____

A2) Model _____ Serial _____

B1) Model _____ Serial _____

B2) Model _____ Serial _____

Condenser (30HXA only)

Circuit A	**Circuit B**
Model _____	Model _____
Serial _____	Serial _____
Model _____	Model _____
Serial _____	Serial _____

II. Preliminary Equipment Check (to be completed by installing contractor)

Is there any physical damage? ☐ Yes ☐ No

Description _____

_____

1. Unit is installed level as per the installation instructions. ☐ Yes ☐ No
2. Power supply agrees with the unit nameplate. ☐ Yes ☐ No
3. Correct control voltage _____vac. ☐ Yes ☐ No
4. Electrical power wiring is installed properly. ☐ Yes ☐ No
5. Unit is properly grounded. ☐ Yes ☐ No
6. Electrical circuit protection has been sized and installed properly. ☐ Yes ☐ No
7. All terminals are tight. ☐ Yes ☐ No
8. All plug assemblies are tight. ☐ Yes ☐ No
9. All cables and thermistors have been inspected for crossed wires. ☐ Yes ☐ No
10. All thermistors are fully inserted into wells. ☐ Yes ☐ No
11. Mechanical room maintained above 50 F (10 C) (30HX only) ☐ Yes ☐ No

Chilled Water System Check

1. All chilled water valves are open. ☐ Yes ☐ No
2. All piping is connected properly. ☐ Yes ☐ No
3. All air has been purged from the system. ☐ Yes ☐ No
4. Chilled water pump is operating with the correct rotation. ☐ Yes ☐ No
5. Chilled water pump starter interlocked with chiller. ☐ Yes ☐ No
6. Inlet piping to cooler includes a 20 mesh strainer. ☐ Yes ☐ No
7. Water loop volume greater than 2 gal/ton for air conditioning or 6 gal/ton for process cooling and low ambient operation. ☐ Yes ☐ No
8. Proper loop freeze protection provided to ____ °F (°C). ☐ Yes ☐ No

   Antifreeze type_____ Concentration _____%.

   If antifreeze solution is not utilized on 30GX machines and the minimum outdoor ambient is below 32 F (0° C) then items 10 - 13 have to be completed to provide cooler freeze protection to 0 F. Refer to Installation Instructions for proper cooler winterization procedure.)
9. Outdoor piping wrapped with electric heater tape. ☐ Yes ☐ No
10. Cooler heaters installed and operational (30GX Only). ☐ Yes ☐ No
11. Cooler heads and tube sheets are insulated. ☐ Yes ☐ No
12. Chilled water pump controlled by chiller. ☐ Yes ☐ No

    (Chilled water pump will start automatically to circulate water through cooler during potential freezing conditions.)

CUT ALONG DOTTED LINE

CUT ALONG DOTTED LINE

Condenser Water System Check (30HXC Only)

1. All condenser water valves are open. ☐ Yes ☐ No
2. All piping is connected properly ☐ Yes ☐ No
3. All air has been purged from the system. ☐ Yes ☐ No
4. Condenser water pump is operating with the correct rotation. ☐ Yes ☐ No
5. Condenser water pump controlled by chiller. ☐ Yes ☐ No
6. Inlet piping to condenser includes a 20 mesh strainer. ☐ Yes ☐ No
7. Condenser water flow switch installed. ☐ Yes ☐ No
8. Condenser water flow switch configured and operational. ☐ Yes ☐ No
9. Condenser water control valve installed. ☐ Yes ☐ No
   (Separate control power required.)

Remote Condenser System Check (30HXA Only)

1. All refrigerant piping is connected properly. ☐ Yes ☐ No
2. Equalizer line is installed from motor cooling line to back-pressure valve. ☐ Yes ☐ No
3. Liquid line filter driers installed. ☐ Yes ☐ No
4. Liquid line solenoid valves installed. ☐ Yes ☐ No
5. 134a fan cycling pressure switches installed (09DK). ☐ Yes ☐ No
6. Refrigerant piping and condenser have been leak checked and evacuated. ☐ Yes ☐ No

III. Unit Start-Up

1. All liquid line valves are open. ☐ Yes ☐ No
2. All discharge valves are open. ☐ Yes ☐ No
3. All suction service valves are open (if equipped). ☐ Yes ☐ No
4. All oil line valves are open. ☐ Yes ☐ No
5. Chilled water flow switch is operational. ☐ Yes ☐ No
6. Leak check unit. Locate, repair and report any refrigerant leaks. ☐ Yes ☐ No
7. Voltage is within unit nameplate range. ☐ Yes ☐ No
8. Check voltage imbalance: A-B_____ A-C_____B-C_____

   Average voltage = _____ (A-B + A-C + B-C)/3

   Maximum deviation from average voltage = _____

   Voltage imbalance = _____% (max. deviation/average voltage) x 100

   Voltage imbalance less than 2%. ☐ Yes ☐ No

   (DO NOT start chiller if voltage imbalance is greater than 2%.
   Contact local Utility for assistance.)
9. Verify cooler flow rate (maximum and minimum) ☐ Yes ☐ No

   Pressure entering cooler _____ psig (kpa)
   Pressure leaving cooler _____ psig (kpa)
   Cooler pressure drop _____ psig (kpa)
   Psig x 2.31 ft/psi = _____ ft of water
   Kpa x 0.334 m/psi = _____ m of water
   Maximum cooler flow rate _____ gpm (l/s) (See Cooler Pressure Drop Curve)
   Minimum cooler flow rate _____ gpm (l/s) (See Cooler Pressure Drop Curve)

III. Unit Start-Up (cont)

9. Verify condenser flow rate. ☐ Yes ☐ No

Pressure entering condenser	_____	psig (kpa)
Pressure leaving condenser	_____	psig (kpa)
Condenser pressure drop	_____	psig (kpa)
Psig x 2.31 ft/psi =	_____	ft of water
Kpa x 0.334 m/psi =	_____	m of water
Condenser flow rate	_____	gpm (l/s) (See Condenser Pressure Drop Curve)

Start and operate machine. Complete the following:

1. Complete component test. ☐ Yes ☐ No
2. Check refrigerant and oil charge. Record charge information. ☐ Yes ☐ No
3. Record compressor motor current. ☐ Yes ☐ No
4. Record two sets of operational log readings. ☐ Yes ☐ No
5. Provide operating instructions to owner's personnel. Instruction time _____ hrs.

	Circuit A	Circuit B
Refrigerant Charge		
Additional charge required	_____	_____
Oil Charge		
Additional charge required	_____	_____

Comments:

_____

_____

_____

_____

_____

_____

_____

_____

_____

Signatures:

Start-up Technician_____ Customer Representative _____

Date_____ Date_____

CUT ALONG DOTTED LINE

CUT ALONG DOTTED LINE

Record Software Versions

MODE — RUN STATUS

SUB-MODE	ITEM	DISPLAY	ITEM EXPANSION
VERS	MBB		CESR-131248-__ __-__ __
	EXV		CESR-131172-__ __-__ __
	EMM		CESR-131174-__ __-__ __
	CP1		10233-1R1-__ __-__ __
	CP2		10233-1R1-__ __-__ __
	SCB		CESR-131226-__ __-__ __
	NAVI		CESR-131227-__ __-__ __

(Press ENTER and ESCAPE simultaneously to obtain software versions)

Record Configuration Information

MODE — CONFIGURATION

SUB-MODE	ITEM	DISPLAY	ITEM EXPANSION	ENTRY
DISP	TEST	ON/OFF	TEST DISPLAY LED'S	
	METR	ON/OFF	METRIC DISPLAY	
	LANG	x	LANGUAGE	
	PAS.E	ENBL/DSBL	PASSWORD ENABLE	
	PASS	xxxx	SERVICE PASSWORD	
UNIT	TYPE	x	UNIT TYPE	
	TONS	xxx	UNIT SIZE	
	CAP.A	xxx%	CIRCUIT A% CAPACITY	
	CMP.A	x	NUMBER CIRC A COMPRESSOR	
	CMP.B	x	NUMBER CIRC B COMPRESSOR	
	DIS.S	xx.x	DISCHARGE SUPERHEAT SETPOINT	
	FAN.S	x	FAN STAGING SELECT	
	CM.A1	xxx AMPS	COMPR. A1 MUST TRIP AMPS	
	CM.A2	xxx AMPS	COMPR. A2 MUST TRIP AMPS	
	CM.B1	xxx AMPS	COMPR. B1 MUST TRIP AMPS	
	CM.B2	xxx AMPS	COMPR. B2 MUST TRIP AMPS	
OPT1	FLUD	x	COOLER FLUID	
	MLVS	YES/NO	MINIMUM LOAD VALVE SELECT	
	HPCT	x	HEAD PRESSURE CONTROL TYPE	
	VHPT	x	VARIABLE HEAD PRESSURE SELECT	
	PRTS	YES/NO	PRESSURE TRANSDUCERS	
	CPC	ON/OFF	COOLER PUMP CONTROL	
	CNP.I	ON/OFF	CONDENSER PUMP INTERLOCK	
	CNPC	x	CONDENSER PUMP CONTROL	
	CWT.S	YES/NO	CONDENSER FLUID SENSORS	
	LVL.E	YES/NO	LEVEL SENSOR ENABLE	
	EMM	YES/NO	EMM MODULE INSTALLED	

Record Configuration Information (cont)

MODE — CONFIGURATION (cont)

SUB-MODE	ITEM	DISPLAY	ITEM EXPANSION	ENTRY
OPT2	CTRL	x	CONTROL METHOD	
	CCNA	xxx	CCN ADDRESS	
	CCNB	xxx	CCN BUS NUMBER	
	BAUD	x	CCN BAUD RATE	
	LOAD	x	LOADING SEQUENCE SELECT	
	LLCS	x	LEAD/LAG SEQUENCE SELECT	
	CP.SQ	x	COMPRESSOR SEQUENCE	
	LCWT	xx.x	HIGH LCW ALERT LIMIT	
	DELY	xx	MINUTES OFF TIME	
	CLS.C	ENBL/DSBL	CLOSE CONTROL SELECT	
	ICE.M	ENBL/DSBL	ICE MODE ENABLE	
	C.UNB	xx%	CURRENT UNBALANCE SETPOINT	
	NO.FL	ENBL/DSBL	NO REFRIGERANT FLOW ALRM ENABLE	
	WM.SG	ENBL/DSBL	WINTERIZE ALERT CONFIG	
	ALR.C	X	ALARM RELAY USAGE	
RSET	CRST	x	COOLING RESET TYPE	
	CRT1	xxx.x	NO COOL RESET TEMP	
	CRT2	xxx.x	FULL COOL RESET TEMP	
	DGRC	xx.x	DEGREES COOL RESET	
	HRST	x	HEATING RESET TYPE	
	HRT1	xxx.x	NO HEAT RESET TEMP	
	HRT2	xxx.x	FULL HEAT RESET TEMP	
	DGRH	xx.x	DEGREES HEAT RESET	
	DMDC	x	DEMAND LIMIT SELECT	
	DM20	xxx%	DEMAND LIMIT AT 20 MA	
	SHNM	xxx	LOADSHED GROUP NUMBER	
	SHDL	xxx%	LOADSHED DEMAND DELTA	
	SHTM	xxx	MAXIMUM LOADSHED TIME	
	DLS1	xxx%	DEMAND LIMIT SWITCH 1	
	DLS2	xxx%	DEMAND LIMIT SWITCH 2	
	LLEN	ENBL/DSBL	LEAD/LAG CHILLER ENABLE	
	MSSL	SLVE/MAST	MASTER/SLAVE SELECT	
	SLVA	xxx	SLAVE ADDRESS	
	LLBL	x	LEAD/LAG BALANCE SELECT	
	LLBD	xxx	LEAD/LAG BALANCE SELECT	
	LLDY	xxx	LAG START DELAY	
	PARA	YES/NO	PARALLEL CONFIGURATION	
SLCT	CLSP	x	COOLING SETPOINT SELECT	
	HTSP	x	HEATING SETPOINT SELECT	
	RL.S	ENBL/DSBL	RAMP LOAD SELECT	
	CRMP	x.x	COOLING RAMP LOADING	
	HRMP	x.x	HEATING RAMP LOADING	
	HCSW	COOL/HEAT	HEAT COOL SELECT	
	Z.GN	x.x	DEADBAND MULTIPLIER	

Record Configuration Information

MODE — CONFIGURATION (cont)

SUB-MODE	ITEM	DISPLAY	ITEM EXPANSION	ENTRY
SERV	H.PGN	xx.x	HEAD PRESSURE P GAIN	
	H.IGN	xx.x	HEAD PRESSURE I GAIN	
	H.DGN	xx.x	HEAD PRESSURE D GAIN	
	H.MIN	xxx.x	WATER VALVE MINIMUM POS	
	MT.SP	xxx.x	MOTOR TEMP SETPOINT	
	BR.FZ	xxx.x	BRINE FREEZE POINT	
	EN.A1	ENBL/DSBL	ENABLE COMPRESSOR A1	
	EN.A2	ENBL/DSBL	ENABLE COMPRESSOR A2	
	EN.B1	ENBL/DSBL	ENABLE COMPRESSOR B1	
	EN.B2	ENBL/DSBL	ENABLE COMPRESSOR B2	
	W.DNE	YES/NO	WINTERIZATION PERFORMED	
BCST	TD.B.C	ON/OFF	CCN TIME/DATE BROADCAST	
	OAT.B	ON/OFF	CCN OAT BROADCAST	
	GS.B.C	ON/OFF	GLOBAL SCHEDULE BROADCAST	
	BC.AK	ON/OFF	BROADCAST ACKNOWLEDGER	

MODE — SETPOINT

SUB-MODE	ITEM	DISPLAY	ITEM EXPANSION	ENTRY
COOL	CSP.1	xxx.x	COOLING SETPOINT 1	
	CSP.2	xxx.x	COOLING SETPOINT 2	
	CSP.3	xxx.x	ICE SETPOINT	
HEAT	HSP.1	xxx.x	HEATING SETPOINT 1	
	HSP.2	xxx.x	HEATING SETPOINT 2	
HEAD	HD.P.A	xxx.x	HEAD PRESSURE SETPOINT A	
	HD.P.B	xxx.x	HEAD PRESSURE SETPOINT B	
LIQ	LVL.A	xxx.x	LIQUID LEVEL SETPOINT A	
	LVL.B	xxx.x	LIQUID LEVEL SETPOINT B	

CUT ALONG DOTTED LINE

CUT ALONG DOTTED LINE

Component Test — Complete the following tests to make sure all peripheral components are operational before the compressors are started.

MODE – SERVICE TEST

To Enable Service Test Mode, move Enable/Off/Remote Contact Switch to OFF. Configure TEST to ON. Move Switch to ENABLE.

SUB-MODE	ITEM	DISPLAY	ITEM EXPANSION	ENTRY
TEST		ON/OFF	SERVICE TEST MODE	COMPLETE
OUTS	EXV.A	xxx %	EXV % OPEN	
	VH.PA	xxx %	VAR HEAD PRESS %	
	OL.P.A	ON/OFF	OIL PUMP	
	MC.A1	ON/OFF	MOTOR COOLING SOLENOID A1	
	MC.A2	ON/OFF	MOTOR COOLING SOLENOID A2	
	OS.A1	ON/OFF	OIL SOLENOID A1	
	OS.A2	ON/OFF	OIL SOLENOID A2	
	EXV.B	xxx %	EXV % OPEN	
	VH.PB	xxx %	VAR HEAD PRESS %	
	OL.P.B	ON/OFF	OIL PUMP	
	MC.B1	ON/OFF	MOTOR COOLING SOLENOID B1	
	MC.B2	ON/OFF	MOTOR COOLING SOLENOID B2	
	OS.B1	ON/OFF	OIL SOLENOID B1	
	OS.B2	ON/OFF	OIL SOLENOID B2	
	FAN1	ON/OFF	FAN 1 RELAY	
	FAN2	ON/OFF	FAN 2 RELAY	
	FAN3	ON/OFF	FAN 3 RELAY	
	FAN4	ON/OFF	FAN 4 RELAY	
	CLR.P	ON/OFF	COOLER PUMP RELAY	
	CLR.H	ON/OFF	COOLER HEATER	
	CND.P	ON/OFF	CONDENSER PUMP RELAY	
	RMT.A	ON/OFF	REMOTE ALARM RELAY	
COMP	CC.A1	ON/OFF	COMPRESSOR A1 RELAY	
	CC.A2	ON/OFF	COMPRESSOR A2 RELAY	
	LD.A1	ON/OFF	LOADER A1 RELAY	
	LD.A2	ON/OFF	LOADER A2 RELAY	
	MLV	ON/OFF	MINIMUM LOAD VALVE	
	OL.H.A	ON/OFF	OIL HEATER	
	CC.B1	ON/OFF	COMPRESSOR B1 RELAY	
	CC.B2	ON/OFF	COMPRESSOR B2 RELAY	
	LD.B1	ON/OFF	LOADER B1 RELAY	
	LD.B2	ON/OFF	LOADER B2 RELAY	
	MLV	ON/OFF	MINIMUM LOAD VALVE	
	OL.H.B	ON/OFF	OIL HEATER	

CUT ALONG DOTTED LINE

CUT ALONG DOTTED LINE

ALL UNITS:

Record the following information from the Pressures and Temperatures Modes when machine is in a stable operation condition.

COOLER ENTERING FLUID	_____
COOLER LEAVING FLUID	_____
OUTSIDE AIR TEMPERATURE	_____
SPACE TEMPERATURE	_____
CONDENSER ENTERING FLUID	_____
CONDENSER LEAVING FLUID	_____
LEAD/LAG LEAVING FLUID	_____

	CIRCUIT A	CIRCUIT B
SATURATED CONDENSING TEMP	_____	_____
SATURATED SUCTION TEMP	_____	_____
DISCHARGE SUPERHEAT TEMP	_____	_____
MOTOR TEMPERATURE (Comp 1/Comp 2)	_____	_____
DISCHARGE PRESSURE	_____	_____
SUCTION PRESSURE	_____	_____
ECONOMIZER PRESSURE	_____	_____
OIL PRESSURE CMPR (Comp 1/Comp 2)	_____	_____
OIL PRESSURE DIFF. CMPR (Comp 1/Comp 2)	_____	_____
OIL FILTER DIFF. CMPR (Comp 1/Comp 2)	_____	_____
CALCULATED OIL PRESS (Comp 1/Comp 2)	_____	_____

Compressor Running Current — All readings taken at full load.

	L1	L2	L3
Compressor A1	_____	_____	_____
Compressor A2	_____	_____	_____
Compressor B1	_____	_____	_____
Compressor B2	_____	_____	_____

Copyright 2002 Carrier Corporation