Controls, Start-Up, Operation and Troubleshooting

CONTENTS

Page

SAFETY CONSIDERATIONS 2
GENERAL 2
Carrier Indoor Self-contained 50BV Units 2
Single-zone (Space Temperature Control) 2
Multi-zone (Variable Air Volume Control) 2
INSTALLATION AND START-UP 5
Local Access 5
Input/Output Wiring 5
- INPUTS
- BINARY OUTPUTS
- ANALOG OUTPUTS
- WIRING INPUTS AND OUTPUTS

Rnet Wiring 7
- WIRING DEVICES TO THE UC OPEN XP CONTROLLER'S RNET PORT
- WIRING ZS SENSORS TO THE CONTROLLER
- WIRING THE WIRELESS ADAPTER FOR WIRELESS SENSORS
- WIRING THE EQUIPMENT TOUCH INTERFACE TO THE UC OPEN XP CONTROLLER
- WIRING THE TRUVU™ ET DISPLAY

Field-Installed Sensors and Accessories 10
- SUPPLY AIR TEMPERATURE SENSOR (SAT)
- RETURN AIR TEMPERATURE SENSOR(S) (RAT)
- DUCT STATIC PRESSURE PROBE AND TUBING (VAV ONLY)
- SPACE TEMPERATURE
- RELATIVE HUMIDITY SENSOR (REQUIRED FOR DEUMDIFICATION OPERATION)
- CO_2 SENSOR (REQUIRED FOR DCV OPERATION)
- ZS COMMUNICATING SENSORS (RNET)
- DISCRETE INPUTS

Communication Wiring and Addressing 13
- ADDRESSING THE UC OPEN XP CONTROLLER
- WIRING FOR COMMUNICATIONS
- WIRING SPECIFICATIONS FOR BACNET MS/TP AND ACR156
- WIRING THE CONTROLLER TO THE NETWORK

Points and Properties 14
- SETPOINTS
- ZS SENSOR BINDER

CV SEQUENCE OF OPERATION 27
Scheduling 27
- OCCUPANCY SCHEDULES
- SCHEDULE_SCHEDULE
- OCCUPANCY INPUT CONTACT (OPTION)
- BAS (BUILDING AUTOMATED SYSTEM) ON/OFF
- GLOBAL OCCUPANCY SCHEDULING
- BACNET NETWORK OCCUPANCY INPUT

Indoor Fan Operation 27
- AUTOMATIC FAN SPEED CONTROL
- FAN MODES
- FAN DELAY

Cooling Operation 27
- COMPRESSOR DELAY
- WATER SIDE ECONOMIZER (WSE)
- MODULATING HOT GAS REHEAT FOR DEHUMIDIFICATION (MHGRH)

Heating Operation 28
- COMPRESSOR DELAY
- AUXILIARY HOT WATER HEAT

VAV SEQUENCE OF OPERATION 28
Occupancy 29
- AIRSIDE LINKAGE
- STANDALONE

Indoor Fan Operation 29
- STATIC PRESSURE RESET

Cooling Operation 29
- SUPPY AIR TEMPERATURE CONTROL (WITH OPTIONAL RESET FUNCTION)
- MODULATING HOT GAS REHEAT
- COMPRESSOR DELAY

Heating Operation 29
- MORNING WARM-UP
- OCCUPIED HEATING
- UNOCCUPIED HEATING

CV AND VAV SEQUENCE OF OPERATION 30
Indoor Air Quality (IAQ) and Demand Control Ventilation (DCV) 30
- 2-POSITION OA DAMPER (OPTIONAL)

Demand Limiting 30
Compressor Status 30
Fan Status 30
Condenser Water Valve End Switch 30
Water Flow Proving Switch 30
Fire/Smoke Detector Input 30
Shutdown Input 31
APPENDIX A — WIRING DIAGRAMS 32
APPENDIX B — BACNET POINTS LIST 34
APPENDIX C — EQUIPMENT TOUCH NAVIGATION AND WIZARD 39

This document is to be used in conjunction with the following Carrier Corporation manuals:
- Equipment Touch Installation and Setup Guide
- Terminal Controller Installation and Setup Guide
- MS/TP Networking and Wiring Installation Guide

Manufacturer reserves the right to discontinue, or change at any time, specifications or designs without notice and without incurring obligations.

SAFETY CONSIDERATIONS

Installation and servicing of air-conditioning equipment can be hazardous due to system pressure and electrical components. Only trained and qualified service personnel should install, repair, or service air-conditioning equipment.

Untrained personnel can perform basic maintenance functions of cleaning coils and filters and replacing filters. All other operations should be performed by trained service personnel. When working on air-conditioning equipment, observe precautions in the literature, tags and labels attached to the unit, and other safety precautions that may apply.

Follow all local building codes and appropriate national electrical codes (in USA, ANSI/NFPA 70, National Electrical Code (NEC); in Canada, CSA C22.1) for special requirements. Wear safety glasses and work gloves. Use quenching cloth for unbrazing operations. Have fire extinguisher available for all brazing operations.

It is important to recognize safety information. This is the safety-alert symbol ⚠. When you see this symbol on the unit and in instructions or manuals, be alert to the potential for personal injury.

Understand the signal words DANGER, WARNING, CAUTION, and NOTE. These words are used with the safety-alert symbol. DANGER identifies the most serious hazards which **will** result in severe personal injury or death. WARNING signifies hazards which **could** result in personal injury or death. CAUTION is used to identify unsafe practices, which **may** result in minor personal injury or product and property damage. NOTE is used to highlight suggestions which **will** result in enhanced installation, reliability, or operation.

GENERAL

The SCU Open controller is an integrated component of the Carrier Indoor self-contained unit. The controller utilizes the Carrier UC Open XP and UC Open XP IO expander hardware. Its internal application programming can be configured to operate the indoor self-contained unit as a single-zone unit for space temperature control or as a multi-zone variable air volume unit air source (MZ-VAV). The SCU Open controller allows the unit to operate within the Carrier i-Vu Open network, enabling air and water side linkage or as a standalone unit with monitoring/control from a third-party BACnet building automation system (BAS). Carrier's i-Vu user interface Equipment Touch™ or System Touch™ and the Field Assistant technician tool can be used with the SCU Open controller. Access is available via the local access port or the Rnet communication network. Refer to Fig. 1 and Tables 1-3.

Carrier Indoor Self-contained 50BV Units

The 50BV self-contained units are indoor packaged products and available as water source cooling only with optional hot water heat or heat pump units. 50BV units are available in sizes 020-034 (single piece) and 034-060 (modular). Each unit contains multiple scroll compressors piped in separate refrigerant circuits. Each circuit includes a coaxial (tube-in-tube) water coil, TXV (thermostatic expansion valve), individual air coil, and all interconnecting piping. Hot gas bypass is available on all units (required for multi-zone VAV configurations). 50BV units utilize face split air coils and should not be operated below 50% of the nominal air flow to prevent coil freezing.

All 50BV units include a unit protection module (UPM) which implements all the unit primary safeties. The SCU Open interfaces with the UPM. For details on the UPM sequence of operation see the 50BV equipment installation manual.

For complete details on Carrier 50BV units please refer to the latest 50BV product data and installation manuals.

Single-zone (Space Temperature Control)

The single-zone configuration for space temperature control is available on both, cooling only with optional auxiliary hot water heat or heat pump units. The SCU open provides either two or four stages of mechanical cooling and heat pump heating (if equipped) to maintain the zone air temperature setpoint, based on a zone air temperature input (typically a ZS sensor). Optional functionality includes modulating hot gas reheat for dehumidification, on/off integrated water side economizer control, modulating hot water heat, source water valve enable and end switch input, modulating outdoor air damper with demand controlled ventilation (DCV) operation, and auto fan speed control.

For complete details on the single-zone configuration functions see the sequence of operation sections of this document.

Multi-zone (Variable Air Volume Control)

The multi-zone configuration for variable air volume control is available for cooling only units with optional hot water heat. The SCU open provides two or four stages of mechanical cooling with modulating hot gas reheat for supply air temperature control. The controller operates the unit as a pressure independent air source varying the fan speed to maintain a static pressure setpoint. Optional functionality includes on/off integrated water side economizer control, modulating hot water heat, source water valve enable and end switch input, and modulating outdoor air damper with demand controlled ventilation (DCV) operation.

For complete details on the multi-zone configuration functions see the sequence of operation sections of this document.

⚠ CAUTION

To protect against large electrical surges on serial EIA-485 networks, place a PROT485 at each place wire enters or exits the building.

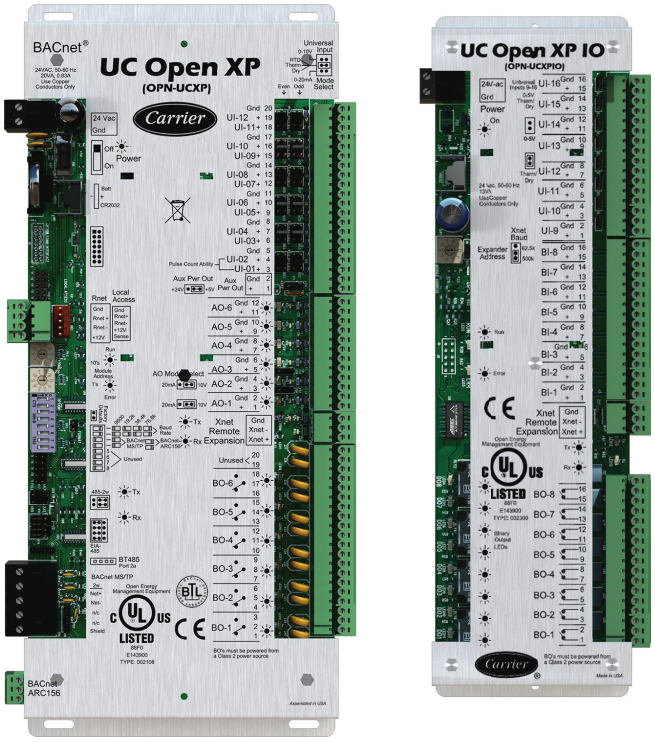

Fig. 1 — UC Open Control Module

Table 1 — UC Open XP Specifications

INPUT/OUTPUT	DESCRIPTION
Power	24 vac ±10%, 50/60 Hz 20 VA power consumption 26 vdc (25-v min, 30-v max) Single Class 2 source only, 100 VA or less
BACnet MS/TP Port	For communication with the controller network using MS/TP (9600 bps, 19.2 kbps, 38.4 kbps, or 76.8 kbps).
BACnet ARC156 Port	For communication with the controller network using ARC156.
Rnet Port[a]	• Supports up to 15 wireless and/or ZS sensors, and one Equipment Touch or TruVu™ ET display. • Supplies 12 vdc/210 mA power to the Rnet at an ambient temperature of 77°F (25°C) with a 24 vac nominal power source. NOTE: Ambient temperature and power source fluctuations may reduce the power supplied by the Rnet port.
Local Access Port	For system start-up and troubleshooting using Field Assistant technician tool.
Xnet Remote Expansion Port	For communication with the UC Open XP IO expander.
Input	12 inputs configurable for 0-10v, RTD Therm Dry, or 0-20mA. Inputs 1 and 2 may be used for pulse counting.
Input Pulse Frequency	10 pulses per second. Minimum pulse width (on or off time) required for each pulse is 50 msec.
Input Resolution	12 bit A/D.
Auxiliary Power Output	5 vdc or 24 vdc input sensor power. Jumper selectable, limited to 200 mA. Available on input terminal 1.
Binary Outputs	6 binary outputs, configured as dry contact, normally open or normally closed, must be powered from a Class 2 power source.
Analog Outputs	6 analog outputs: • 1 and 2 are configurable for 0-10v or 0-20 mA • 3-6 are 0-10v only
Output Resolution	8 bit A/D.
Real Time Clock	Battery-backed real time clock keeps track of time in the event of a power failure.
Battery	10-year Lithium CR2032 battery retains the following data for a maximum of 10,000 hours during power outages: control programs, editable properties, schedules, and trends.
Protection[b]	• Built-in surge and transient protection for power and communications in compliance with EN61000-6-1. • Incoming power and network connections are protected by non-replaceable internal solid-state polyswitches that reset themselves when the condition that causes a fault returns to normal. • The power, network, input, and output connections are also protected against transient excess voltage/surge events lasting no more than 10 msec.
Status Indicators	LEDs indicate status of communications, running, errors, and power. LED indicators for transmit/receive for the BACnet MS/TP and ARC156 ports and for each of the 12 outputs.
Environmental Operating Range	0 to 140°F (–18 to 60°C), 0 to 90% relative humidity, non-condensing
Storage Temperature Range	–24 to 140°F (–30 to 60°C), 0 to 90% relative humidity, non-condensing
Physical	Rugged aluminum housing with removable screw terminals.

NOTE(S):

a. If the total power required by the sensors on the Rnet exceeds the power supplied by the Rnet port, use an external power source. The Wireless Adapter, Equipment Touch, or TruVu™ ET display must be powered by an external power source. See the specifications in each device's Installation and Start-up Guide to determine the power required.

b. To protect against large electrical surges on serial EIA-485 networks, place a PROT485 at each place wire enters or exits the building.

Table 2 — UC Open XP I/O Specifications

INPUT/OUTPUT	DESCRIPTION
Power	• 24 vac ±10%, 50/60 Hz • 13 VA power consumption • 26 vdc (25-v min, 30-v max) • Single Class 2 source only, 100 VA or less
Binary Inputs	BI 1-8 are binary only and support pulse counting up to 10 Hz, dry contact only.
Universal Inputs	UI 9-16 inputs are jumper selectable between thermistor/dry contact and 0-5 vdc.
Input Resolution	10 bit A/D
Input Pulse Frequency	10 pulses per second. Minimum pulse width (on or off time) required for each pulse is 50 msec.
Binary Outputs	8 binary outputs, configured as dry contact, normally open, and must be powered from a Class 2 power source.
Protection	• Built-in surge and transient protection for power and communications in compliance with EN61000-6-1. • Incoming power and network connections are protected by non-replaceable internal solid-state polyswitches that reset themselves when the condition that causes a fault returns to normal. • The power, network, input, and output connections are also protected against transient excess voltage/ surge events lasting no more than 10 m/sec.
Status Indicators	LEDs indicate status of communications, running, errors, and outputs.
Environmental Operating Range	0 to 140°F (–18°C to 60°C), 0 to 90% relative humidity, non-condensing.
Storage Temperature Range	24°F to 140°F (–30°C to 60°C), 0 to 90% relative humidity, non-condensing.
Physical	Rugged aluminum housing with removable screw terminals.

Table 3 — SCU Open I/O Configuration

	INPUT/OUTPUT TYPE	TYPE OF I/O	I/O CHANNEL (CONNECTION PIN)	I/O CONFIGURATION
	INPUTS			
UC OPEN	Occupancy Override	Dry Contact	UI-12-19 and 20	DI
	Duct Static Pressure Sensor	0-5 vdc	UI-11-17 and 18	AI
	Compressor Status (Compressor 4)	IEM 2	UI-10-16 and 17	DI
	Compressor Status (Compressors 1-3)	IEM 1	UI-09-14 and 15	DI
	Return Air Sensors	10K Type II	UI-08-13 and 14	AI
	Entering Water Temperature	10K Type II	UI-07-11 and 12	AI
	Supply Air Temperature Sensor	10K Type II	UI-06-10 and 11	AI
	Relative Humidity Sensor (Required for dehum. operation.)	0-5 vdc	UI-05-8 and 9	AI
	CO_2 Sensor (Required for demand control ventilation.)	0-5 vdc	UI-04-7 and 8	AI
	Leaving Water Temperature Sensor	10K Type II	UI-03-5 and 6	AI
	UPM II (Compressors 2 and 4)	Dry Contact	UI-02-2 and 4	DI
	UPM II (Compressors 1 and 3)	Dry Contact	UI-01-2 and 3	DI
	OUTPUTS			
	Not Available	—	AO-6-11 and 12	AO
	Outdoor Air Damper	0-10 vdc	AO-4-7 and 8	AO
	Auxiliary Hot Water Heat	0-10 vdc	AO-3-5 and 6	AO
	Modulating Hot Gas Re-heat Valves	0-10 vdc	AO-2-3 and 4	AO
	Fan Speed (VFD Drive Terminal Strip AI-1)	0-10 vdc	AO-1-1 and 2	AO
	Compressor Stage 4 Command (Y4)	24 vac	BO-6-16-18	BO
	Compressor Stage 3 Command (Y3)	24 vac	BO-5-13-15	BO
	Compressor Stage 2 Command (Y2)	24 vac	BO-4-10-12	BO
	Compressor Stage 1 Command (Y1)	24 vac	BO-3-7-9	BO
	Reversing Valve (O)	24 vac	BO-2-4-6	BO
	Supply Fan Enable Signal (VFD Drive Terminal Strip)	24 vac	BO-1-1-3	BO
	Xnet Remote Expansion	—	Xnet	Com-Port
UC OPEN EXPANDER	**INPUTS**			
	Not Available	—	IN-10-16, 5, 3	UI
	Condenser Water Valve End Switch (CWVS)	Dry Contact	IN-9-1 and 2	DI
	Supply Duct High Static (SDHS)	Dry Contact	IN-8-15 and 16	DI
	Supply Fan Motor Overload (SFOV)	Dry Contact	IN-7-13 and 14	DI
	Water Flow Proving Switch	Dry Contact	IN-6-11 and 12	DI
	Filter Status Switch (FSS)	Dry Contact	IN-4-7 and 8	DI
	Supply Fan Status Switch (SFSS)	Dry Contact	IN-2-3 and 4	DI
	Fire Alarm (FA)	Dry Contact	IN-1-1 and 2	DI
	OUTPUTS			
	Not Available	—	BO-3-8	DO
	Economizer Valve Command	24 vac	BO-2-3 and 4	DO
	Condenser Water Valve Command (start/stop)	24 vac	BO-1-1 and 2	DO

INSTALLATION AND START-UP

Local Access

Use the following items as a local user interface to an Open controller. These items let you access the controller information, read sensor values, and test the controller. Refer to Table 4. Refer to Table 5 in the Input/Output Wiring section.

NOTE: These are accessory items that do not come with a controller.

Table 4 — Local Accesses

Connect...	To the controller's...	For...
Field Assistant Application[a]	Local access port	Temporary user interface for start-up.
Equipment Touch Interface[b]	Rnet Port	Temporary or permanent user interface for start-up.
i-Vu Application	BACnet Network	Permanent Interface

NOTE(S):

a. Requires a USB Link. (Part No. USB-L)
b. See the Equipment Touch Installation and Setup Guide for detailed instructions.

⚠ CAUTION

If multiple controllers share power but polarity was not maintained when they were wired, the difference between the controller's ground and the computer's AC power ground could damage the USB Link and the controller. If you are not sure of the wiring polarity, use a USB isolator between the computer and the USB Link. Purchase a USB isolator Online from a third-party manufacturer.

Input/Output Wiring

⚠ WARNING

Do not apply line voltage (mains voltage) to the controller's ports and terminals. See Table 3 for terminal types and configuration.

Table 5 — Input Wiring Specifications

INPUT	MAX LENGTH	MIN GAUGE	SHIELDING
0-5 vdc **0-10 vdc**	500 ft (152 m)	22 AWG	100 ft unshielded 100-500 ft shielded
0-20 mA	1000 ft (305 m)	22 AWG	100 ft unshielded 100-500 ft shielded
Thermistor dry contact pulse counter TL0.	500 ft (152 m)	22 AWG	100 ft unshielded 100-500 ft shielded
RTD	100 ft (30 m)	22 AWG	Shielded
ZS Sensor	See Wiring devices to the UC Open XP's Rnet port (See "Rnet Wiring" on page 7.)		
Wireless adapter for wireless sensors.			
Equipment Touch Interface			
TruVu™ Display			

INPUTS

See Table 3 for available inputs and associated configuration/type. Refer to Table 6 for a description of the different input signal types.

Table 6 — Inputs

SIGNAL TYPE	DESCRIPTION
Thermistor	Precon type 2 (10 kOhm at 77°F). Input voltages should be from 0.489 vdc to 3.825 vdc for thermistors.
Dry Contact	A 5 vdc wetting voltage detects contact position, resulting in a 1 mA maximum sense current when the contacts are closed.
0-5 vdc **0-10 vdc**	The input impedance of the UC Open XP controller is approximately 20 kOhm.
0-20 mA	The input resistance on the positive (+) terminal is 250 Ohms. The **Aux Power Out** connector is capable of supplying 24 vdc to multiple 4-20 mA transducers, but the total current demanded must not exceed 200 mA. If the voltage measured from the **Aux Power Out** connector to **Gnd** is less than 18 vdc, you need to use an external power supply.
RTD	• Platinum: 1 kOhm at 32°F (0°C) • Nickel/Iron: 1 kOhm at 70°F (21°C) • Balco TS8000: 1 kOhm at 70°F (21°C) • Input voltages should be from 0.6-1.2v
Pulse Counter[a]	UI-1 and UI-2 only: Maximum of 10 pulses per second. Minimum pulse width required for each pulse: • ON to OFF time (half cycle) is 50 msec • ON to OFF to ON time (full cycle) is msec

NOTE(S):

a. The UC Open XP controller can perform pulse counting for dry contact or voltage inputs if you assign the input to a Pulse to Analog Input microblock.

BINARY OUTPUTS

Each output is a dry contact that must be powered from a Class 2 power source. See Table 3 for available binary outputs.

To size output wiring, consider the following:

- Total loop distance from the power supply to the controller, and then to the controlled device.

NOTE: Include the total distance of actual wire. For 2-conductor wires, this is twice the cable length.

- Acceptable voltage drop in the wire from the controller to the controlled device.
- Resistance (Ohms) of the chosen wire gauge.
- Maximum current (amps) the controlled device requires to operate.

ANALOG OUTPUTS

Refer to Table 3 for available analog outputs.

- 1 and 2 are configurable for 0-10 vdc or 0-20 mA (See Table 7).
- 3, 4, 5, and 6 are 0-10v only.

Table 7 — Analog Input[a,b,c]

The controller must have the following input impedance:	
If output controls a...	**Resistance to ground must be...**
0-10 vdc Device	500 ohms minimum
0-20 mA Device	800 ohms maximum

NOTE(S):

a. The device must share the same ground as the UC Open XP controller.
b. The total output current from all outputs and the **Aux Power Out** connector must not exceed:
200 mA at 86°F (30°C)
200 mA at 115°F
122.5 mA at 140°F
c. For temperatures above 86°F (30°C), use the following equation to calculate the total current at 3.1 mA per degree:
200 mA: [(max. expected temp. –86°F) * 3.1 mA/°F]

WIRING INPUTS AND OUTPUTS

1. Turn off the UC Open XP controller's power.
2. Connect the input wiring to the screw terminals on the UC Open XP controller. See Fig. 2.
   a. If using shielded wire, connect the shield to the **GND** terminal with the ground wire. Tape off the shield wire at the sensor end.
   b. Connect the shield wire to the **GND** terminal with the ground wire.
   c. Use only UI-1 or UI-2 for pulse counter or timed local override.
   d. For an internally powered 4-20 mA sensor, wire the sensor's positive terminal to the + terminal on the UC Open XP controller's **AUX POWER OUT** port. Wire the sensor's negative terminal to an input's + terminal.
3. Set the appropriate jumpers on the UC Open XP controller. See Table 8.
4. Connect the binary output wiring to the screw terminals on the UC Open XP and to the controlled device. See Fig. 3.
5. Connect the analog output wiring to the screw terminals on the UC Open XP and to the controlled device. See Fig. 4.
6. Set the **AO Mode Select** jumper to the type of device you are wiring the output to.
7. Turn **on** the UC Open XP controller's power.

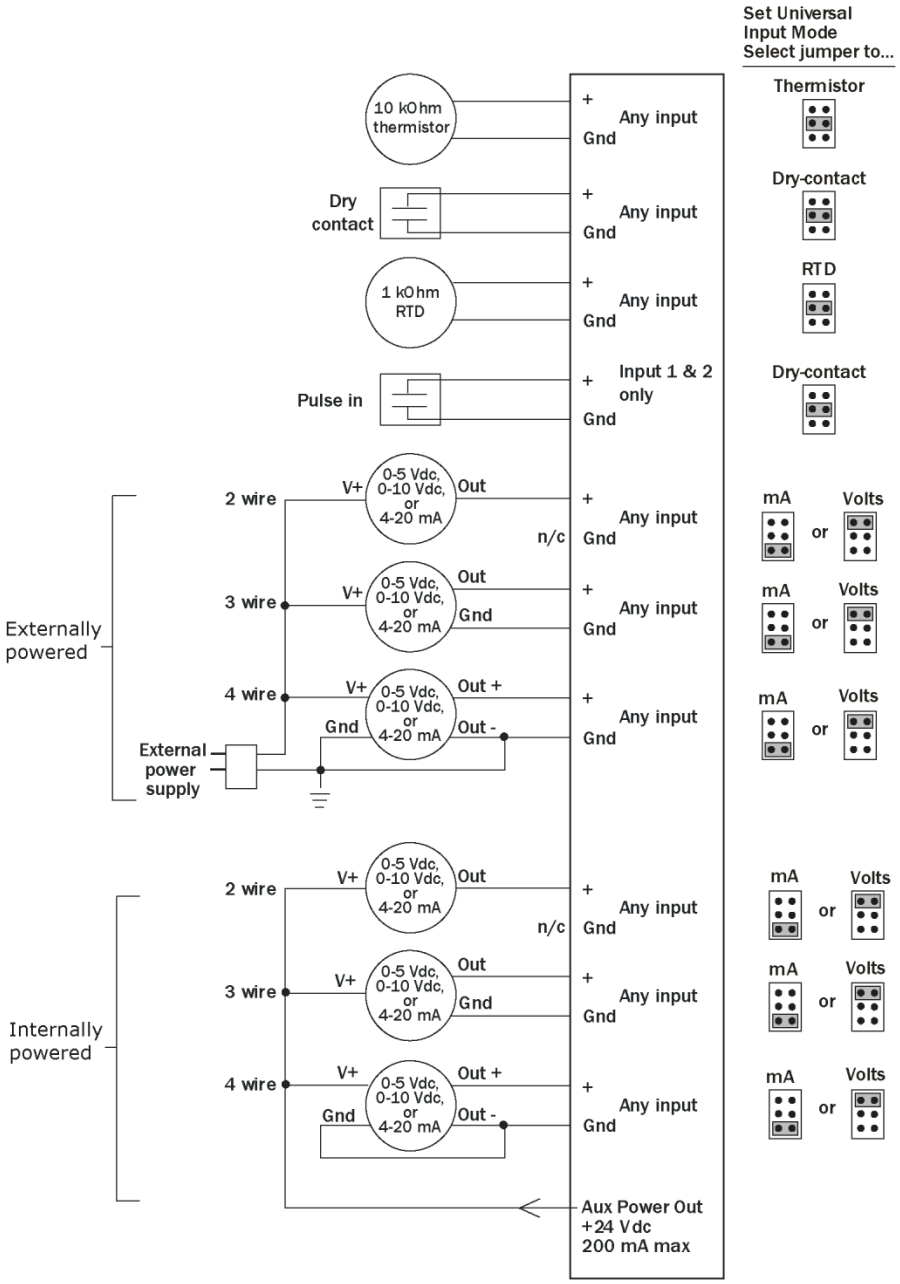

Fig. 2 — UC Open XP Typical Wiring

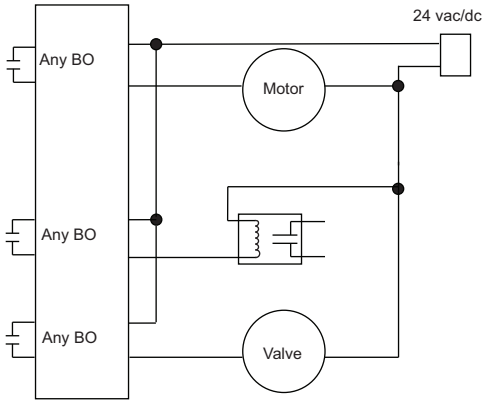

Fig. 3 — Connect Binary Output Wiring Screw Terminals

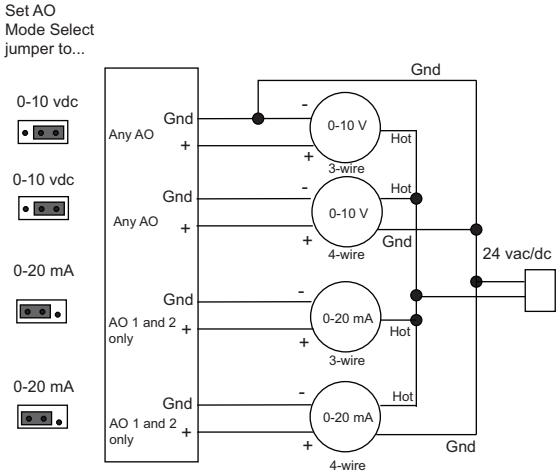

Fig. 4 — Connect Analog Output Wiring to Screw Terminals

Table 8 — Jumper Signals

To use...	For...		
Any Input	• Thermistor • Dry Contact • 0-5 vdc • 0-10 vdc • 0-20 mA • RTD	Set each input's **Universal Input Mode Select** jumper to the type of signal the input will receive.	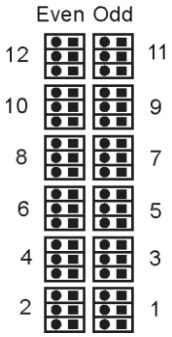
Aux Power Out Port	Internally powered 4-20 mA	Set the **Select** jumper to **+5-v** or **+24-v** as required by the sensor.	

Rnet Wiring

WIRING DEVICES TO THE UC OPEN XP CONTROLLER'S RNET PORT

The Rnet communicates at a rate of 115 kbps and should be wired in a daisy-chain configuration. Refer to Table 10.

This configuration supports up to:

- 15 wireless and/or ZS sensors (5 per control program)
- One Equipment Touch interface
- One TruVu™ ET display

NOTE: ZS sensors, a Wireless Adapter, and an Equipment Touch interface can share the Rnet, but not SPT sensors. The Wireless Adapter, Equipment Touch, or TruVu™ ET display must be powered by an external power source.

WIRING ZS SENSORS TO THE CONTROLLER

ZS sensors are thermistor-based temperature sensors that may optionally sense humidity, CO_2, or VOC (volatile organic compounds). ZS sensors are wired to the Rnet port on i-Vu® Open controllers. You can use the following ZS sensors:

- ZS Standard
- ZS Plus
- ZS Pro
- ZS Pro-F

NOTE: The ZS CO_2 model uses 190 mA during sample period. Use auxiliary 12 vdc, unless it is the only device on the Rnet port. A control program can use no more than 5 ZS sensors. SPT sensors cannot share the Rnet with other devices. For detailed instructions, see the ZS Sensor Installation Guide.

Follow Steps 1-4 for wiring the ZS Sensor to the controller:

1. Remove power from the UC Open XP controller.
2. Partially cut, then bend and pull off the outer jacket of the Rnet cable(s). Do not nick the inner insulation. Strip about .0.25 in. (0.6 cm) of the inner insulation from each wire. See Fig. 5.

NOTE: Carrier recommends using the Rnet wiring scheme in Table 9.

3. Wire each terminal on the sensor to the same terminal on the controller. Refer to Table 10.
4. Apply power to the UC Open XP controller.

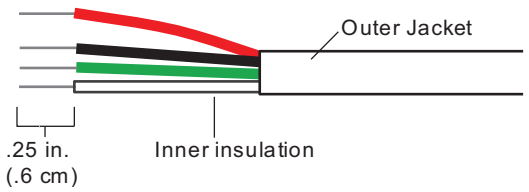

Fig. 5 — Installing ZS Sensor Cables

Table 9 — Rnet Wiring Scheme

Connect this wire...	To this terminal...
Red	+12v
Black	Rnet–
White	Rnet+
Green	Gnd

Table 10 — Rnet Wiring Specifications[a]

WIRE/CABLE TYPE	SPECIFICATIONS	DESCRIPTION
4 Conductor Shielded Or Unshielded CMP Plenum Rated Cable	Conductor	22 AWG (7x0096) bare copper if Rnet has only sensors
	Maximum length	500 ft (152 m)
	Insulation	Low-smoke PVC (or equivalent)
	Color Code	Black, white, green, red
	Shielding	If shielded, Aluminum/Mylar shield (100% coverage) with TC drain wire, terminated at controller
	UL Temperature Rating	32-167°F (0-75°C)
	Voltage	300 vac, power limited
	Listing	UL:NEC CL2P, or better

NOTE(S):

a. Use the specified type of wire and cable for maximum signal integrity.

LEGEND

CMP — Communications Multipurpose Cable Plenum
AWG — American Wire Gauge
PVC — Polyvinyl Chloride
TC — Tinned Copper Wire

WIRING THE WIRELESS ADAPTER FOR WIRELESS SENSORS

The Carrier wireless sensors are available in 868, 902, and 928 MHz radio frequency. The sensors are thermistor-based temperature sensors that may optionally sense humidity.

Wireless sensors communicate through a Wireless Adapter, which is wired to the Rnet port of the controller.

⚠ WARNING

Do not apply line voltage (mains voltage) to the Wireless Adapter.

Requirements:

- A v6.5 or later i-Vu® system
- v6-xx-xxx or later controller drivers

To configure the control program for the desired user interaction with the sensor, see the Wireless Sensors Application Guide. For detailed instructions, see the Wireless Sensors Installation Guide.

Wire, Power, and Mount the Wireless Adapter

The Wireless Adapter requires a 24 vac power supply. It is not powered by the Rnet.

If the Wireless Adapter will be:

- Daisy-chained on the Rnet with ZS sensors, an Equipment Touch, or TruVu™ ET display, use the standard 4-conductor Rnet wiring.
- The only device on the Rnet, you can use a 3-conductor cable instead of the standard 4-conductor Rnet cable.

Follow Steps 1-9 for wiring and mounting of the adaptor:

1. Turn off the power to the controller that the Wireless Adapter will be wired to.
2. Partially cut, then bend and pull off the outer jacket of the Rnet cable(s). Do not nick the inner insulation. See Fig. 6.
3. Strip about 0.25 in. (0.6 cm) of the inner insulation from each wire.
4. Wire the **Rnet+**, **Rnet–**, and **Gnd** terminals on the controller's **Rnet** port to the terminals of the same name on the Wireless Adapter's Rnet connector.
   NOTE: If using shielded wire, connect the shield wire and the ground wire to the **Gnd** terminal. See Fig. 7.
5. Wire the 24 vac external power supply to the Wireless Adapter's power connector.
6. Mount the Wireless Adapter by inserting 2 screws through the mounting tabs on each end of the Wireless Adapter.
7. Apply power to the external power supply.
8. Verify that the LED on top of the Wireless Adapter is blinking. See "LED Indicator" on page 9.
9. Turn on the controller's power.

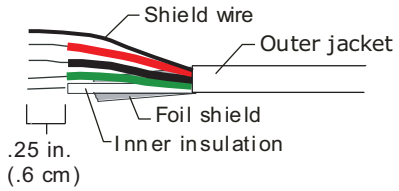

Fig. 6 — Wiring the Wireless Adapter to Controller

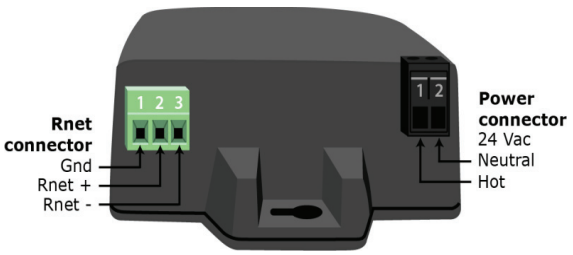

Fig. 7 — Wiring Rnet and Ground Terminals to the Controller

LED Indicator

The blue LED on the top of the Wireless Adapter indicates the following in Table 11:

Table 11 — Indicators

IF the LED is...	Then the device...
Off	is not powered or there is a problem.
Blinking	is working properly.
Steadily on	has a problem. Do one of the following: • Cycle power to the device. • Insert a small screwdriver or paper clip into the hole next to the LED to reboot the device.

WIRING THE EQUIPMENT TOUCH INTERFACE TO THE UC OPEN XP CONTROLLER

The Equipment Touch interface requires a 24 vac power supply. It is not powered by the Rnet.

If the Equipment Touch interface will be:

- Daisy-chained on the Rnet with ZS sensors or a Wireless Adapter, use the standard 4-conductor Rnet wiring and follow the wiring instructions "Wiring ZS sensors to the controller" on page 7.
- The only device on the Rnet, you can use a 2-conductor cable instead of the standard 4-conductor Rnet cable and follow the instructions below.

For complete Equipment Touch installation instructions including wiring diagrams, see the Equipment Touch Installation and Setup Guide

Complete Steps 1-6:

⚠ CAUTION

The UC Open XP controller can share a power supply with the Carrier controller as long as:

- The power supply is AC power.
- You maintain the same polarity.
- You use the power source only for Carrier controllers.

1. Turn **off** the UC Open XP controller's power.
2. Partially cut, then bend and pull off the outer jacket of the cable. Do not nick the inner insulation. See Fig. 8.

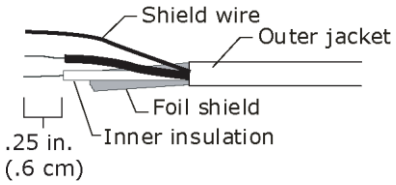

Fig. 8 — Wiring Equipment Touch Interface to UC Open XP Controller

3. Strip about 0.25 in. (0.6 cm) of the inner insulation from each wire.
4. Wire the UC Open XP controller's **Rnet+ and Rnet–** terminals to the terminals of the same name on the Equipment Touch's interface connector. NOTE: If using shielded wire, connect the shield wire and the ground wire to the **Gnd** terminal.
5. Turn **on** the UC Open XP controller's power.
6. Turn on the Equipment Touch interface.

WIRING THE TRUVU™ ET DISPLAY

⚠ WARNING

- Do not apply line voltage (main): 24 vdc power only.

Wiring Power:

1. Wire the TruVu™ ET display **24 vdc** connector to the 24 vdc power supply using 2-conductor 18 AWG wire. Maximum distance 100 ft (30 m). See Fig. 9.

⚠ CAUTION

The TruVu™ ET display can share a power supply with the Carrier controller as long as:

- The power supply is DC power.
- You maintain the same polarity.
- You use the power source only for Carrier controllers.

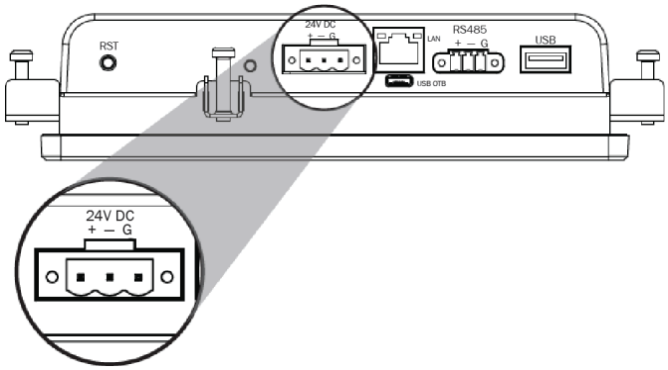

Fig. 9 — Wiring TruVu™ ET Display to the Power Supply

Wiring Communication

1. Turn off the UC Open XP controller's power.
2. Wire the TruVu™ ET display's **RS485** connector to the controller's **Rnet** port, **G** to **Gnd**, + to **Rnet+**, – to **Rnet–** using 2-conductor 22 AWG wire with a maximum distance of 500 ft (152 m). See Fig. 10.
3. Turn on the UC Open XP controller's power.

For complete TruVu™ ET display installation instructions, see the TruVu™ ET Display Installation and Start-up Guide.

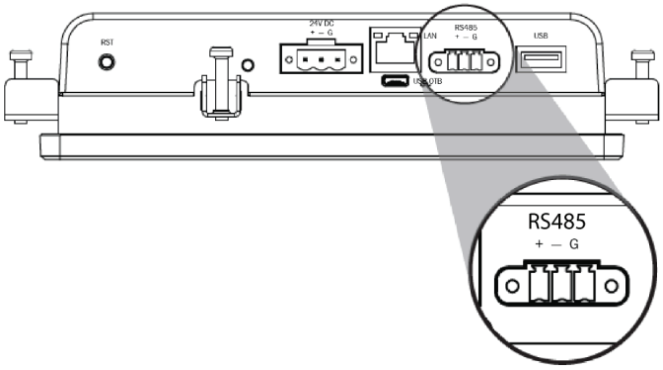

Fig. 10 — Wiring TruVu™ ET Display to Rnet Communication Port

Field-Installed Sensors and Accessories

See Fig. 11 and Table 12 for a summary of the factory and field-supplied sensors for units ordered with the SCU Open controller.

SUPPLY AIR TEMPERATURE SENSOR (SAT)

Units ordered with the SCU Open controller ship with a factory-installed supply air temperature sensor in one of the blower housings. This sensor should not be used for VAV (variable air volume) operation. It is recommended to disconnect the sensor connected to UI-06 of the controller and installed in the blower housing and field install the duct temperature sensor shipped loose with the unit. The sensor includes a 12 in. probe.

Sensor Mounting

1. Place the sensor in the middle of the duct away from temperature stratified air, coils or humidifiers to achieve the best temperature reading. Refer to Fig. 11.
2. Drill the probe hole as depicted in Fig. 12 for the enclosure being used. Insert the probe into the duct.
3. Mount the enclosure to the duct using No. 8 screws through a minimum of two opposing mounting tabs. NOTE: Weather-proof enclosures require assembly of the mounting tabs on opposite corners. A 1/8 in. pilot screw hole in the duct makes mounting easier through the mounting tabs. Use the enclosure tabs to mark the pilot hole locations.
4. Snug up the sensors so that the foam backing is depressed to prevent air leakage but do not over-tighten or strip the screw threads.

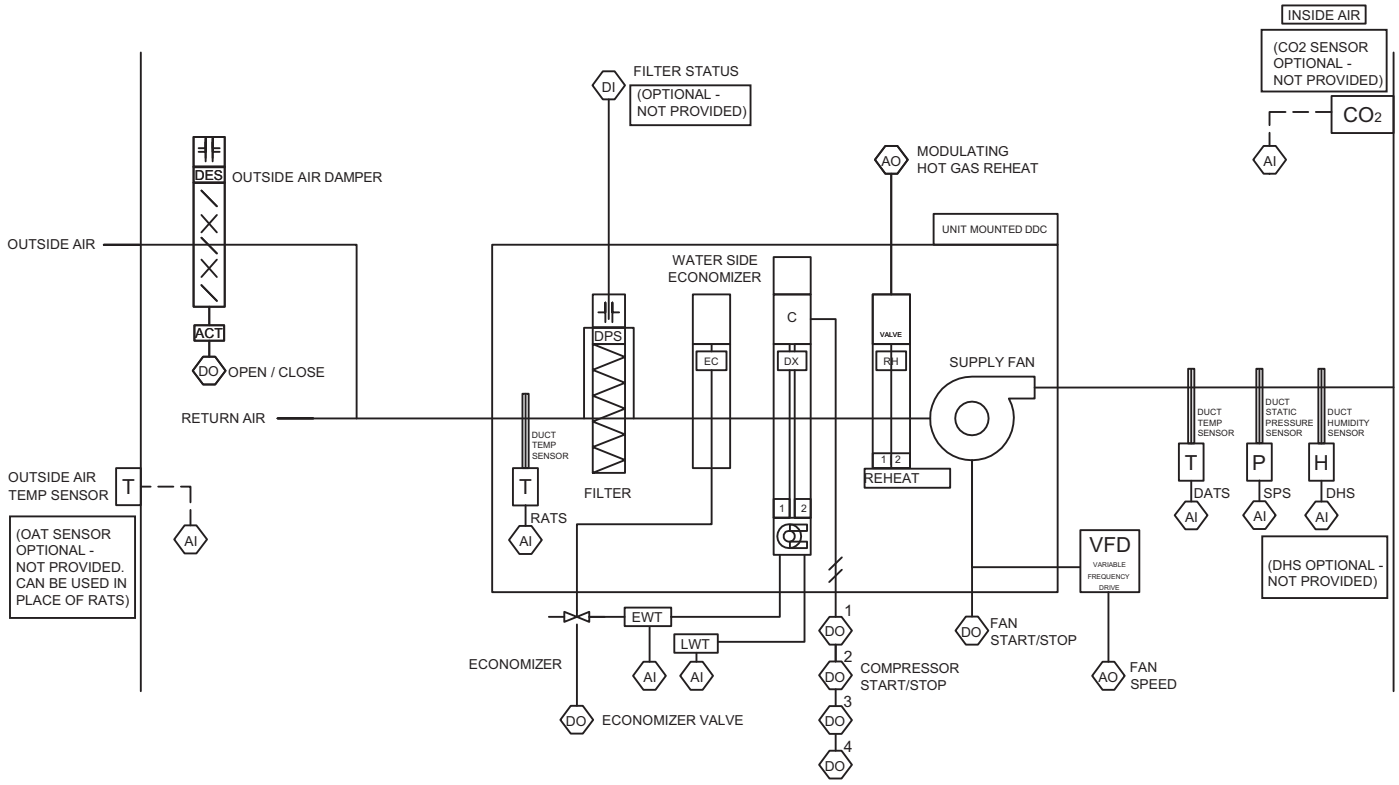

Fig. 11 — 50BV J/W Sensor Schematic

Table 12 — Sensor Summary

DESCRIPTION	QTY	SHIPPING LOCATION	INSTALLATION LOCATION	PART NUMBER
Supply Air Temperature Sensor	1	Installed	Blower Housing	8-733-815-707
Supply Air Temperature Sensor (Required for VAV Operation)	1	Loose for field installation	Supply Air Stream	T-111-641-258
Return Air Temperature Sensor	4	Loose for field installation	Return Air Stream	T-111-641-258
Entering Water Temperature	1	Installed	Source Entering Water	8-733-815-707
Leaving Water Temperature	1	Installed	Source Leaving Water	8-733-815-707
Duct Static Pressure Sensor	1	Loose for field installation	Supply Air Stream	8-733-940-957
Compressor Current Transducer	1 per comp.	Installed	Unit Electrical Box	8-733-941-336
Relative Humidity Sensor (Optional, Required for Dehumidification)	1	Field Supplied	Space or Return Air Stream	ZS, 33ZCSENSRH-02, 33ZCSENDRH-02
CO_2 Sensor (Optional, Required for DCV Operation)	1	Field Supplied	Space or Return Air Stream	ZS, 33ZCSPTCO2-01
Flow Switch	1	ETO to Factory Install Differential Pressure Switch/ Field Supplied	Across Water Entering and Leaving/NA	T-111-641-192/NA

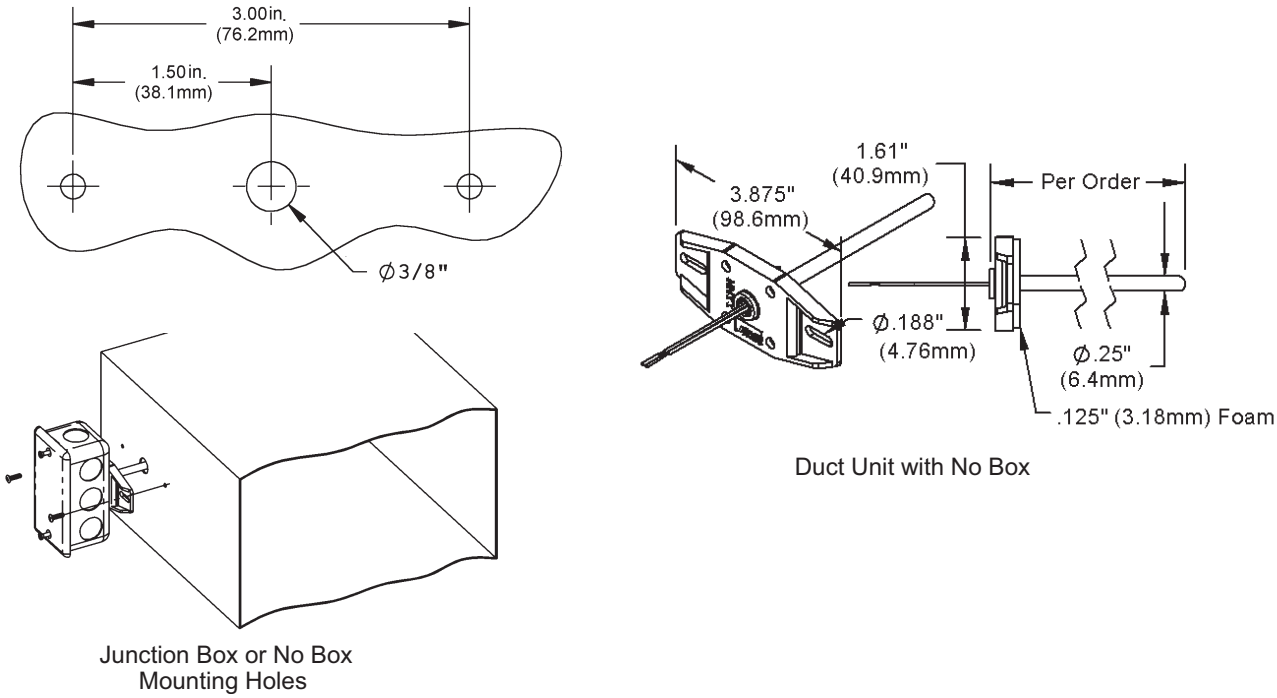

Fig. 12 — Sensor Mounting to Duct

RETURN AIR TEMPERATURE SENSOR(S) (RAT)

Units ordered with the SCU Open controller will ship with 4 RAT sensors, which are used for determining load for cooling staging. The RAT sensors must be field-installed in the return air ductwork or in front of the return air filter (free return) at various points to properly sense the return air condition. The RAT sensors should be installed near the unit to sense the true load on the unit (including any mixed air). The RAT sensors are daisy-chained and wired back to UI-8 on the unit controller. See "Sensor Mounting" on page 10 for the supply air temperature sensor for mounting instructions.

DUCT STATIC PRESSURE PROBE AND TUBING (VAV ONLY)

On VAV systems, the duct static pressure sensor is factory supplied (ships inside control cabinet) and requires field installation, field provided tubing, and a pressure pick-up port.

Mounting and Tubing Installation

The pressure sensor low port should be left open to atmosphere. The pressure sensor high port should be connected with tubing to a pressure pick up port. The pressure pick up port should be installed as close to 2/3 of the way down the duct system in a straight section of duct, away from any turning vanes, take offs, or areas in the duct that could feature turbulence.

Install the duct static pressure probe with the tip facing into the airflow. See Fig. 13.

Use 1/4 in. OD (Outside Diameter) approved polyethylene tubing for up to 50 ft (3/8 in. OD for 50 to 100 ft) to connect the probe to the bulkhead fitting mounted above the unit display panel. Carefully route the tubing from the probe to this bulkhead fitting.

The static pressure control should be adjusted so that, at full airflow, all of the remote VAV terminal boxes receive the minimum static pressure required plus any downstream resistance. Control the system to the lowest static pressure set point that will satisfy airflow requirements. Lower static pressure set points reduce total required brake horsepower and reduce generated sound levels.

Power and Wiring

Follow Steps 1-5 and the diagram in Fig. 14 for the 3-wire configuration. The sensor will be wired back to UI-11 of the SCU Open controller.

1. Wire and power up unit.

NOTE: For CE compliance a properly grounded shielding cable is required.

2. Select Pressure Range: Set appropriate full scale range using the Slide Switch Multiplier and JMP4 jumper. A-D is WC and E-H is Pa. LCD will momentarily indicate selected range. NOTE: To select E-H position also move JMP to Pa position.
3. Select Unidirectional or Bi-directional mode.
4. Select Current (mA) or Voltage 0-5, or 0-10 vdc output range (Voltage 0-5 for SCU Open Controller).
   NOTE: Be sure to set mA/volt switch to volt position if using 0 to 5-v or 0 to 10-v outputs.
5. Push Button:
   To Auto **Zero**: While at zero pressure, press and hold the **Zero Button until (-0-) appears and release** to automatically reset output to zero.

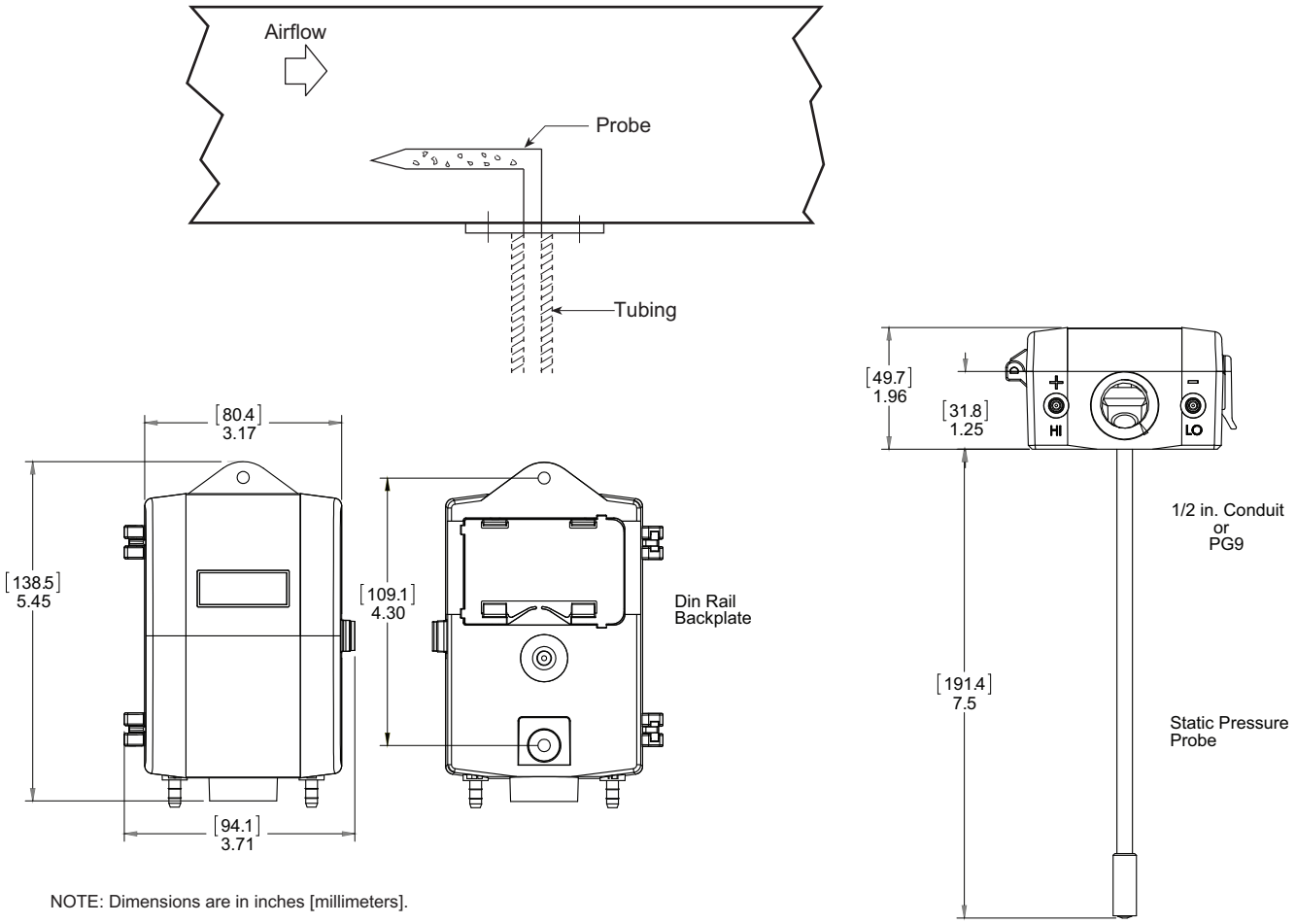

Fig. 13 — Duct Static Pressure Probe Installation

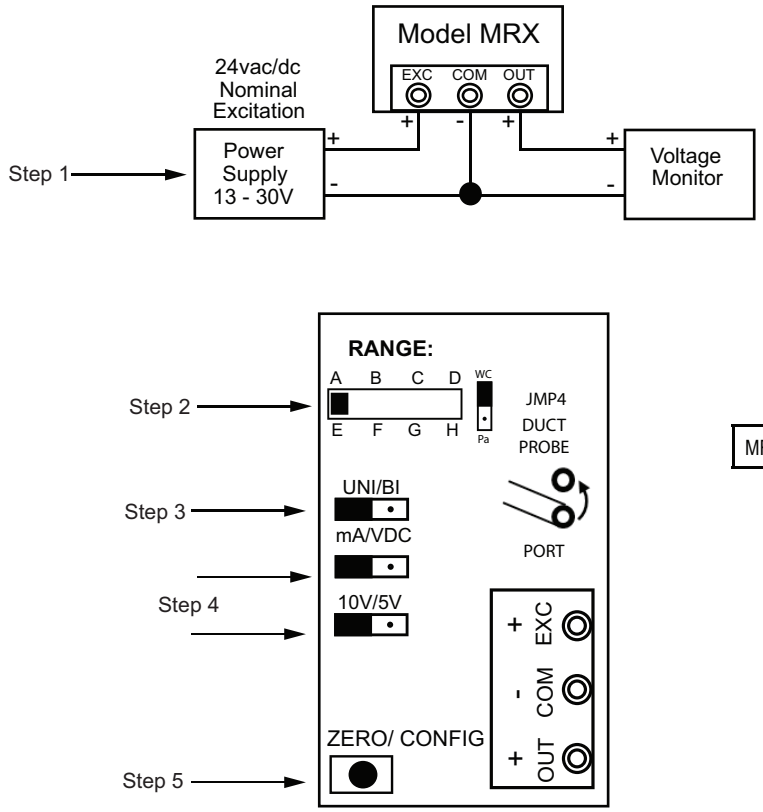

Multi-Sense Range Specifications

MRG	Range	UNI Range	BI Range
	A	5.0"WC	±5.0"WC
	B	2.5"WC	±2.5"WC
	C	1.0"WC	±1.0"WC
	D	0.5"WC	±0.5"WC
	E	1000 Pa	±1000 Pa
	F	500 Pa	±500 Pa
	G	250 Pa	±250 Pa
	H	100 Pa	±100 Pa

Fig. 14 — Duct Static Pressure Probe Wiring

SPACE TEMPERATURE

When the controller is configured as CV (constant volume) for single-zone space temperature control a space temperature input is required. The controller can receive the space temperature via a ZS sensor wired to the RNET port (preferred) or over the network. When linkage is active the space temperature can be obtained via linkage. Alternatively, the control temperature for space temperature control can be configured to the local return air temperature sensors.

RELATIVE HUMIDITY SENSOR (REQUIRED FOR DEUMDIFICATION OPERATION)

A space or duct mounted relative humidity sensor can be used to monitor the relative humidity of the conditioned space or return air duct. This is required for HGRH (hot gas reheat) dehumidification operation available for single-zone space temperature control applications. The controller source for relative humidity can be a local sensor wired to UI-05 on the controller, the network, or a ZS sensor wired to the RNET port. Refer to the input/output wiring section on page 5 of this manual for wiring specifications and Table 12 for available Carrier Relative Humidity sensors.

CO_2 SENSOR (REQUIRED FOR DCV OPERATION)

The indoor air quality can be monitored with a CO_2 sensor monitoring the concentration of carbon dioxide ppm (parts per million) of the conditioned space. This is required for demand-controlled ventilation operation in which a modulating damper is controlled based on the CO_2 concentration in the space. The controller source for CO_2 can be a local sensor wired to UI-04 on the controller, the network, or a ZS sensor wired to the RNET port. Refer to the input/output wiring section on page 5 of this manual for wiring specifications and Table 12 for available Carrier CO_2 sensors.

ZS COMMUNICATING SENSORS (RNET)

The RNET bus allows local communication with the SCU Open controller, including communicating sensors. The RNET bus can support zone temperature, CO_2, and relative humidity. A variety of ZS sensors supporting any one or a combination of these values are available for use with the SCU open controller. A maximum of five ZS sensors can be used on a single controller.

DISCRETE INPUTS

The following discrete inputs are provided for use with optional field-installed accessories. Each input is configurable to be normally open (NO) or normally closed (NC).

- Condenser Water Valve Status (CWVS)
- Differential Pressure Switch (DPS)
- Fire Alarm Input (FA)
- Filter Status Switch (FSS)
- Supply Fan Status Switch (SFSS)
- Supply Duct High Static (SDHS)
- Supply Fan Motor Overload (SFOV)

Communication Wiring and Addressing

ADDRESSING THE UC OPEN XP CONTROLLER

The UC Open XP controller's two rotary switches determine its MAC address when it is placed on a BACnet MS/TP network.

The rotary switches define the MAC address portion of the device's BACnet address, which is composed of the network address and the MAC address.

1. Turn on the controller's power.
2. Using the rotary switches, set the controller's address. Set the **Tens (10's)** switch to the tens digit of the address, and set the **Ones (1's)** switch to the ones digit.
   EXAMPLE: If the controller's address is 25, point the arrow on the **Tens (10's)** switch to 2 and the arrow on the **Ones (1's)** switch to 5. See Fig. 15.
3. Turn on the controller's power.
   NOTE: The controller reads the address each time you apply power to it.

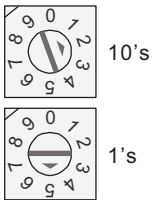

Fig. 15 — Setting Controller Address (Example)

⚠ CAUTION

The factory default setting is **00** and must be changed to successfully install your UC Open XP controller.

WIRING FOR COMMUNICATIONS

The UC Open XP controller communicates using BACnet on the following types of network segments:

- MS/TP communicating at 9600 bps, 19.2 kbps, 38.4 kbps, or 76.8 kbps
- ARC156 communicating at 156 kbps

NOTE: For more networking details, see the Open Controller Network Wiring Installation Guide.

WIRING SPECIFICATIONS FOR BACNET MS/TP AND ACR156

Cable	22 AWG or 24 AWG, low-capacitance, twisted, stranded, shielded copper wire
Maximum	2000 ft (610 m)

⚠ WARNING

Do not apply line voltage (mains voltage) to the controller's ports and terminals.

WIRING THE CONTROLLER TO THE NETWORK

1. Pull the screw terminal connector from the controller's power terminals labeled **Gnd** and 24 vac.
2. Check the communications wiring for shorts and grounds.
3. Connect the communications wiring to the BACnet MS/TP or to the BACnet ARC156 port.
   NOTE: Use the same polarity throughout the network segment.
4. For MS/TP, verify the jumpers are set to 485-2w and EIA-485. They are not used for ARC156.
5. Set the communication type and baud rate.

For...	Set Communications Selection jumper to...	Set DIP switches 1 and 2 to...	Set DIP switches 3 and 4 to...
MS/TP	MS/TP	The appropriate baud rate. See the MS/TP Baud diagram on the controller.	Off/Off
ARC156	ACR156	N/A. Baud rate will be 156 kbps regardless of the DIP switch settings.	On/On

NOTE: Use the same baud rate for all controllers on the network segment.

6. Wire the controllers on an MS/TP or ARC156 network segment in a daisy-chain configuration.
7. If the UC Open XP controller is at either end of a network segment, connect a BT485 to the UC Open XP.
8. Insert the power screw terminal connector into the UC Open XP controller's power terminals.
9. Verify communication with the network by viewing a Module Status report in the i-Vu® interface.

Points and Properties

Refer to Fig. 16 for a navigation outline of the Field Assistant properties settings. Tables 13-24 on pages 16-26 describe all the possible settings for the controller on the i-Vu® or Field Assistant Properties tab.

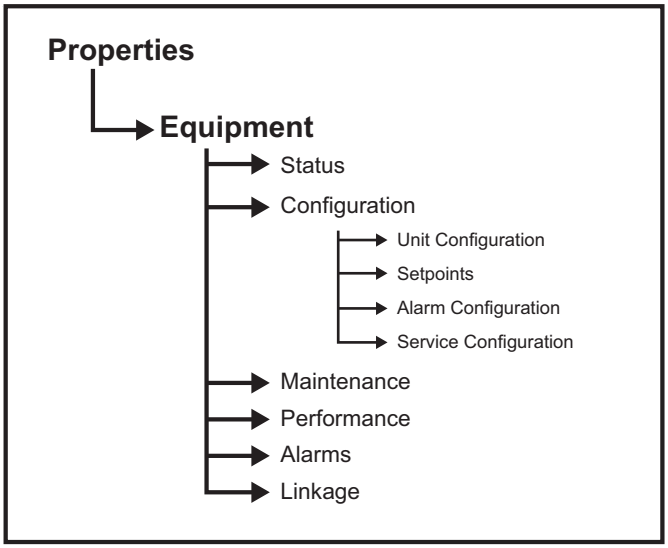

Fig. 16 — Field Assistant Navigation Chart

SETPOINTS

Select a color band on the setpoint graph to see the current setpoints in the Heating and Cooling fields. See setpoint descriptions in Fig. 17.

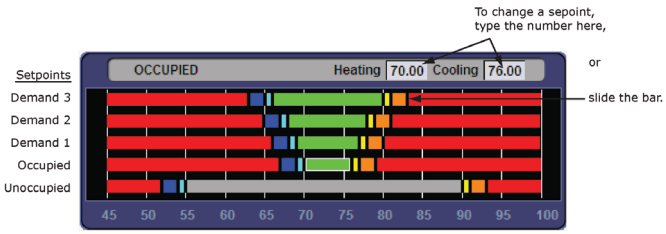

Fig. 17 — Heating and Cooling Setpoints

Occupied setpoints

The occupied setpoints described in Table 14 are the setpoints under normal operating conditions. The demand level 1-3 setpoints apply if demand limiting is used.

Demand limiting is a cost-saving strategy to reduce energy consumption. The strategy expands the occupied heating and cooling setpoints when the system reaches one of 3 levels of consumption. With the expanded setpoints, the equipment works less, thereby saving energy. By default, Demand Level 1 expands the occupied heating and cooling setpoints by 1°F, Demand Level 2 by 2°F, and Demand Level 3 by 4°F. If the occupied heating or cooling setpoints change, the (effective) demand level setpoints automatically change by the same amount. See sequence of operation sections on pages 27, 28, and 30 of this manual for more information.

Unoccupied setpoints

The Hysteresis example in Fig. 18 shows the zone color that results as the space temperature departs from and returns to the acceptable range in a zone with the following settings:

- Color Change Hysteresis = 0.5Δ °F (0.27Δ °C) (applies as the temperature returns to the acceptable range)
- Occupied Cooling Setpoint = 76°F (24.4°C)
- Occupied Heating Setpoint = 70°F (21.1°C)

Refer to Table 15.

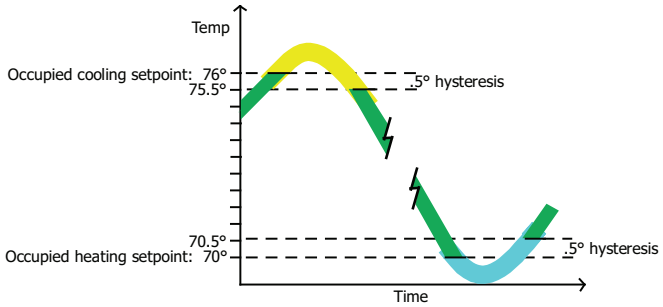

NOTE: The values in the graph below are in Fahrenheit.

Fig. 18 — Hysteresis Example

Learning adaptive optimal start

When the Learning Adaptive Optimal Start algorithm runs, the learned heating capacity or learned cooling capacity values are adjusted based on the color that is achieved when occupancy begins. The adjustment amounts for each color are displayed in the thermographic color fields (with English default values). Refer to Table 16 and Fig. 19.

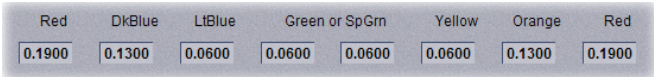

Fig. 19 — Learning Adaptive Adjustment Amounts

ZS sensor setpoints

To configure setpoint properties for ZS sensors, **Ctrl+click** anywhere on the **Zone Setpoints** (graph at the top of the Setpoints section in order to access the **Properties** microblock popup). Refer to Fig. 20 and Table 17.

In the popup, on the **Properties** → **Sensor** tab, configure ZS or wireless sensors for **Setpoint Adjust**. See Fig. 21 and Table 18.

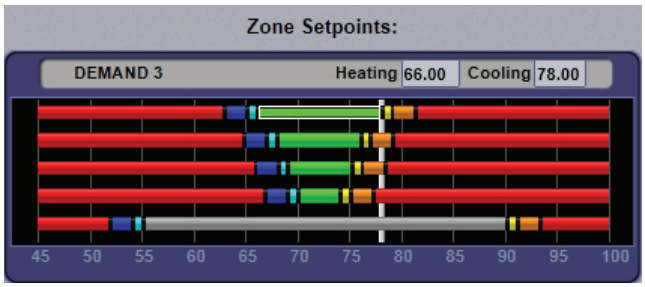

Fig. 20 — Zone Setpoints

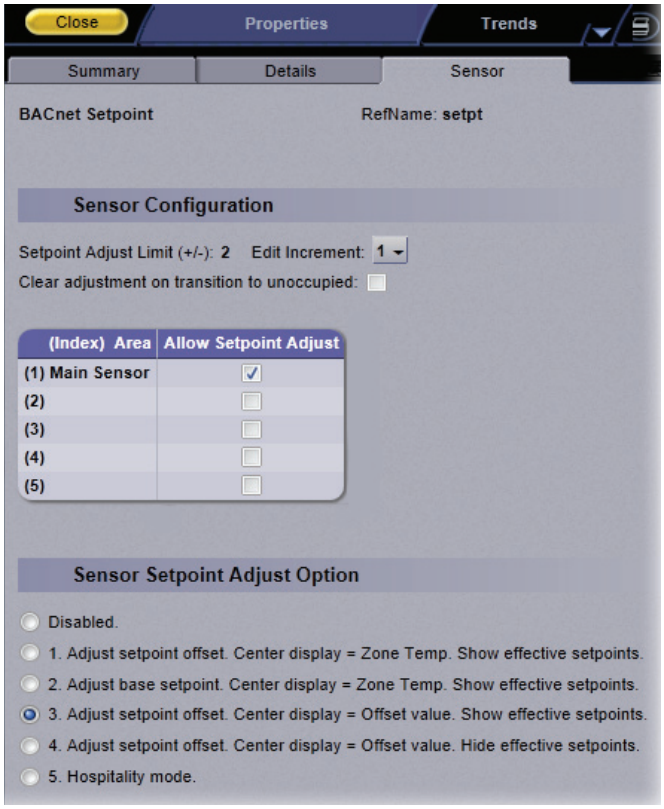

Fig. 21 — Adjusting Setpoints

ZS SENSOR BINDER

Ctrl+click on the name of these properties to access the microblock popup **Properties** page → **Details** tab. Refer to the following configurations for instructions on configuring your ZS or wireless sensors. Refer to Fig. 22.

See the microblock reference manual for more detailed explanations.

Sensor Binder

Use "Sensor Summary" on page 10 to configure the Rnet to use additional ZS or wireless sensors.

Network Type: Set to **Rnet.**

Address: Enter the DIP switch settings that are on the additional ZS sensors (up to 5 total) or RnetID assigned to each wireless sensor in SensorBuilder.

Lock Display: Check to make the sensor display-only.

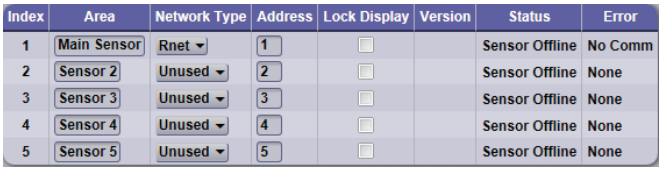

Index	Area	Network Type	Address	Lock Display	Version	Status	Error
1	Main Sensor	Rnet	1			Sensor Offline	No Comm
2	Sensor 2	Unused	2			Sensor Offline	None
3	Sensor 3	Unused	3			Sensor Offline	None
4	Sensor 4	Unused	4			Sensor Offline	None
5	Sensor 5	Unused	5			Sensor Offline	None

Fig. 22 — Sensor Binder Example

Zone Temp

Configure additional ZS or wireless temperature sensors used on the 50BV unit. See Fig. 23.

Use: Check to include ZS or wireless sensors' value in the Combined Algorithm (Average is the default).

Raw Value: Displays sensed temperature for each ZS or wireless temperature sensor's address.

Calibration: If needed, enter value to adjust the **Corrected Value** from the **Raw Value**, in order to calibrate an individual ZS or wireless sensor's sensed value.

Combination Algorithm: Use **Average**, **Maximum**, or **Minimum** zone temperature to calculate the **Corrected Value** for temperature control.

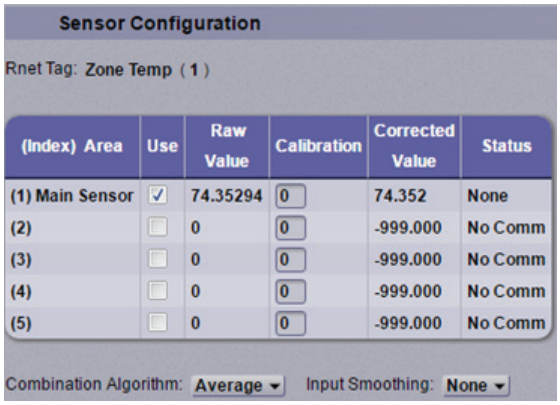

Sensor Configuration

Rnet Tag: Zone Temp (1)

(Index) Area	Use	Raw Value	Calibration	Corrected Value	Status
(1) Main Sensor	✓	74.35294	0	74.352	None
(2)		0	0	-999.000	No Comm
(3)		0	0	-999.000	No Comm
(4)		0	0	-999.000	No Comm
(5)		0	0	-999.000	No Comm

Combination Algorithm: Average Input Smoothing: None

Fig. 23 — Zone Temperature Example

Zone Humidity

Configure additional ZS or wireless humidity sensors used on the 50BV unit. Refer to Fig. 24.

Use: Check to include ZS or wireless sensors' value in the **Combined Algorithm** (**Average** is the default).

Raw Value: Displays sensed temperature for each ZS or wireless temperature sensor's address.

Calibration: If needed, enter value to adjust the **Corrected Value** from the **Raw Value**, in order to calibrate an individual ZS or wireless sensor's sensed value.

Combination Algorithm: Use **Average**, **Maximum**, or **Minimum** zone temperature to calculate the **Corrected Value** for temperature control.

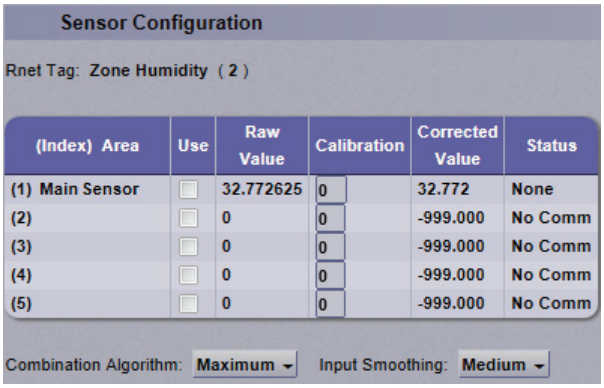

Sensor Configuration

Rnet Tag: Zone Humidity (2)

(Index) Area	Use	Raw Value	Calibration	Corrected Value	Status
(1) Main Sensor		32.772625	0	32.772	None
(2)		0	0	-999.000	No Comm
(3)		0	0	-999.000	No Comm
(4)		0	0	-999.000	No Comm
(5)		0	0	-999.000	No Comm

Combination Algorithm: Maximum Input Smoothing: Medium

Fig. 24 — Zone Humidity Example

ZS Zone CO_2

Configure additional ZS CO_2 sensors used on the 50BV unit. See Fig. 25.

Use: Check to include ZS sensors' value in the **Combined Algorithm** (**Maximum** is the default).

Raw Value: Displays sensed CO_2 for each ZS CO_2 sensor's address.

Calibration: If needed, enter value to adjust the **Corrected Value** from the **Raw Value**, in order to calibrate an individual ZS sensor's sensed value.

Combination Algorithm: Use **Average**, **Maximum**, or **Minimum** ZS CO_2 to calculate the **Corrected Value** for CO_2 control.

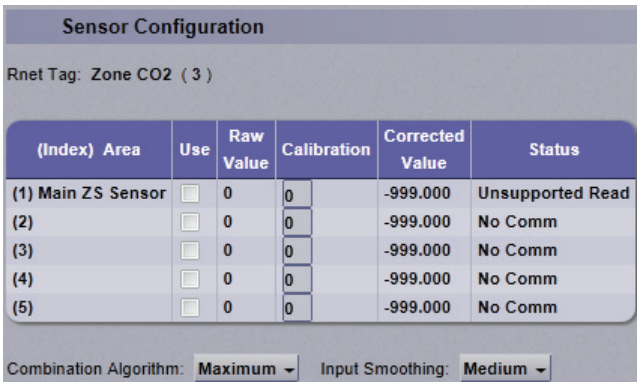

Fig. 25 — ZS Zone CO_2 Example

Table 13 — Controller Status Commands

POINT NAME/DESCRIPTION	DEFAULT	RANGE
i-Vu® / Field Assistant Navigation: Properties → Control Program → Status		
System Mode: The controller's current operating mode.	—	OFF, Fan only, Economizer, Cooling, Heating, Cont Fan, Test, Start Delay, Dehumidify, Fire Shutdown, IAQ Override
Controlling Temperature: The temperature currently used for control.	—	–56 to 245°F
Space Temperature (Prime Variable): The space temperature value currently used for control.	—	–56 to 245°F
Return Air Temperature: Displays the current return air temperature.	—	–56 to 245°F
Supply Air Temperature: Displays the current supply air temperature.	—	–56 to 245°F
Leaving Cond. Water Temp: The temperature of the water leaving the condenser.	—	–56 to 245°F
Entering Cond. Water Temp: The temperature of the water entering the condenser. NOTE: If water linkage is configured, this temperature is transferred from the UC Open/ UC Open XP controller as part of Linkage data.	—	–56 to 245°F
Outdoor Air Temperature: The outdoor air temperature used for control.	—	–56 to 245°F
Supply Fan Speed: The commanded state of the supply fan.	—	Off, Low, Med, High, On
Supply Fan Status: Displays the current operating status of the fan.	—	Off/On
Supply Fan VFD Output: Displays the current output of the supply fan VFD.	—	0-100%
Static Pressure: Displays the current static pressure.	—	0-5 in H_2O
Compressor Capacity: The percentage of compressors running.	—	0 to 100%
Damper Output: The current commanded output of the outdoor air damper, if equipped.	—	0 to 100%
Water Economizer Output: The current commanded output of the water economizer valve.	—	0 to 100%
Auxiliary Heat Output: The current commanded output of the heating device.	—	0 to 100%
HGRH Output: The current commanded output of the hot gas reheat device.	—	0 to 100%
Space Relative Humidity: The current space relative humidity. It is used for control if a factory dehumidification reheat coil is installed.	—	0 to 100%rh
Dehumidification: Displays whether the space requires dehumidification.	—	Off/Active
Indoor Air Quality CO_2 (ppm): Displays the current CO_2 sensor value. Applicable if **IAQ Source** is not set to **N/A**.	—	0 to 9999 ppm
Shutdown: When **Active**, provides a means to stop heating and cooling in an orderly manner. All alarms are reset and current active alarms are displayed.	Inactive	Inactive/Active

Table 14 — Occupied Cooling and Heating Setpoints

POINT NAME/DESCRIPTION	DEFAULT RANGE: –40°F TO 245°F			
	OCCUPIED	DEMAND LEVEL		
		1	2	3
i-Vu® / Field Assistant Navigation: Properties → Control Program → Configuration → Setpoints				
Occupied Heating: Green The heating setpoint the controller maintains while in occupied mode.	70°F	69°F	68°F	66°F
Occupied Cooling: Green The cooling setpoint the controller maintains while in occupied mode.	76°F	77°F	78°F	80°F
Occupied Heating 1: Light Blue The space temperature must be less than the Occupied Heating 1 setpoint for the VVT Primary to consider the zone a heating caller in a linked system. In a single-zone application, the heating requirement begins as soon as the space temperature falls below the Occupied Heating setpoint. Carrier recommend that the Occupied Heating 1 value be set no less than 0.5°F(0.27°C) below the Occupied Heating setpoint.	69°F	68°F	67°F	65°F
Occupied Heating 2: Dark Blue The space temperature must be less than the Occupied Heating 2 setpoint to generate a low space temperature alarm. Carrier recommend that this value be set no less than 0.5°F (0.27°C) below the Occupied Heating 1 setpoint.	67°F	66°F	65°F	63°F
Occupied Cooling 1: Yellow The space temperature must be greater than the Occupied Cooling 1 setpoint for the VVT Primary to consider the zone a cooling caller in a linked system. In a single-zone application, the cooling requirement begins as soon as the space temperature exceeds the Occupied Cooling setpoint. Carrier recommend that the Occupied Cooling 1 value be set no less than 0.5°F (0.27°C) above the Occupied Cooling setpoint.	77°F	78°F	79°F	81°F
Occupied Cooling 2: Orange The space temperature must be greater than the Occupied Cooling 2 setpoint to generate a high space temperature alarm. Carrier recommend that this value be set no less than 0.5°F (0.27°C) above the Occupied Cooling 1 setpoint.	79°F	80°F	81°F	83°F

Table 15 — Unoccupied Cooling and Heating Setpoints

POINT NAME/DESCRIPTION	DEFAULT	RANGE
i-Vu® / Field Assistant Navigation: Properties → Control Program → Configuration → Setpoints		
Unoccupied Heating: Gray The heating setpoint the controller maintains while in unoccupied mode.	55°F	–40 to 245°F
Unoccupied Cooling: Gray The cooling setpoint the controller maintains while in unoccupied mode.	90°F	–40 to 245°F
Unoccupied Heating 1: Light Blue The space temperature must be less than the Unoccupied Heating 1 setpoint for the VVT Primary to consider the zone an unoccupied heating caller in a linked system. In a single-zone application, the unoccupied heating requirement begins as soon as the space temperature falls below the Unoccupied Heating setpoint. We recommend that the Unoccupied Heating 1 value be set no less than 0.5 °F (0.27 °C) below the Unoccupied Heating setpoint.	54°F	–40 to 245°F
Unoccupied Heating 2: Dark Blue The space temperature must be less than the Unoccupied Heating 2 setpoint to generate an unoccupied low space temperature alarm. We recommend that this value be set no less than 0.5 °F (0.27 °C) below the Unoccupied Heating 1 setpoint.	52°F	–40 to 245°F
Unoccupied Cooling 1: Yellow The space temperature must be greater than the Unoccupied Cooling 1 setpoint for the VVT Primary to consider the zone an unoccupied cooling caller in a linked system. In a single-zone application, the unoccupied cooling requirement begins as soon as the space temperature exceeds the Unoccupied Cooling setpoint. We recommend that the Unoccupied Cooling 1 value be set no less than 0.5 °F (0.27 °C) above the Unoccupied Cooling setpoint.	91°F	–40 to 245°F
Unoccupied Cooling 2: Orange The space temperature must be greater than the Unoccupied Cooling 2 setpoint to generate an unoccupied high space temperature alarm. We recommend that this value be set no less than 0.5 °F (0.27 °C) above the Unoccupied Cooling 1 setpoint.	93°F	–40 to 245°F
Heating Capacity: Used for Optimal Start, this is the rate at which the space temperature changes when the heating system runs at full capacity to maintain designed occupied heating setpoint.	3°F/hr	0 to 120°F/hr
Heating Design Temperature: The geographically based outdoor air temperature at which the heating system must run constantly to maintain comfort. This information is available in ASHRAE publications and most design references.	0°F	–100 to 150°F
Cooling Capacity: Used for Optimal Start, this is the rate at which the space temperature changes when cooling system runs at full capacity to maintain designed occupied cooling setpoint.	3°F/hr	0 to 140°F
Cooling Design Temperature: The geographically based outdoor air temperature at which the cooling system must run constantly to maintain comfort. This information is available in ASHRAE publications and most design references.	100°F	–100 to 150°F
Hysteresis: The desired difference between the temperature at which the zone color changes as the space temperature departs from the acceptable range between the heating and cooling setpoints (green) into the Cooling 1 (yellow) or Heating 1 (light blue) and the temperature at which the zone color changes back to the acceptable range between the heating and cooling setpoints.	0.5°F	0 to 120°F

Table 16 — Learning Adaptive Algorithms

POINT NAME/DESCRIPTION	DEFAULT	RANGE
i-Vu® / Field Assistant Navigation: Properties → Control Program → Configuration → Setpoints		
Red: The amount the zone's learned heating capacity is adjusted when the Learning Adaptive Optimal Start algorithm runs, when the zone's thermographic color at occupancy is red.	0.19	0 to 1
DkBlue: The amount the zone's learned heating capacity is adjusted when the Learning Adaptive Optimal Start algorithm runs, when the zone's thermographic color at occupancy is dark blue.	0.13	0 to 1
LtBlue: The amount the zone's learned heating capacity is adjusted when the Learning Adaptive Optimal Start algorithm runs, when the zone's thermographic color at occupancy is light blue.	0.06	0 to 1
Green: The amount the zone's learned heating capacity is adjusted when the Learning Adaptive Optimal Start algorithm runs, when the zone's thermographic color at occupancy is green.	0.06	0 to 1
SpGrn: The amount the zone's learned cooling capacity is adjusted when the Learning Adaptive Optimal Start algorithm runs, when the zone's thermographic color at occupancy is green.	0.06	0 to 1
Yellow: The amount the zone's learned cooling capacity is adjusted when the Learning Adaptive Optimal Start algorithm runs, when the zone's thermographic color at occupancy is yellow.	0.06	0 to 1
Orange: The amount the zone's learned cooling capacity is adjusted when the Learning Adaptive Optimal Start algorithm runs, when the zone's thermographic color at occupancy is orange.	0.13	0 to 1
Red: The amount the zone's learned cooling capacity is adjusted when the Learning Adaptive Optimal Start algorithm runs, when the zone's thermographic color at occupancy is red.	0.19	0 to 1

Table 17 — ZS Sensor Setpoint

POINT NAME/DESCRIPTION	DEFAULT	RANGE
i-Vu® / Field Assistant Navigation: Properties → Control Program → Configuration → Setpoints		
Edit Increment: Amount of offset in degrees for each press of the up or down arrows on the ZS or wireless sensor for setpoint adjustment.	0.5	0.1, 0.5, 1.0
Allow Setpoint Adjust: Check to allow setpoint adjustments on the specified ZS or Carrier wireless sensor.	(1) Enabled	Disabled/Enabled
Sensor Setpoint Adjust Option: Check to select the ZS or wireless setpoint adjustment display.	3	—

Table 18 — Effective Setpoints

POINT NAME/DESCRIPTION	DEFAULT	RANGE
i-Vu® / Field Assistant Navigation: Properties → Control Program → Configuration → Setpoints		
Heating: The current programmed Heating setpoint adjusted by any offset that may be in effect (Occupied or Unoccupied, depending on mode).	—	0 to 120°F
Cooling: The current programmed Cooling setpoint adjusted by any offset that may be in effect (Occupied or Unoccupied, depending on mode).	—	0 to 120°F
Learned Cooling Capacity: The cooling capacity learned by Learning Adaptive Optimal Start that is required to bring the space temperature down to the occupied cooling setpoint prior to the occupied time.	—	—
Learned Heating Capacity: The heating capacity learned by Learning Adaptive Optimal Start that is required to bring the space temperature up to the occupied heating setpoint prior to the occupied time.	—	—
Static Pressure Setpoint: The supply air static pressure setpoint.	0.5 in. H_2O	0.25 to 5 in. H_2O
Supply Air Setpoint: The supply air temp cooling setpoint.	55°F	38 to 75°F
Optimal Start: The number of hours prior to occupancy, at which the Optimal Start function may begin to adjust the effective setpoints to achieve the occupied setpoints by the time scheduled occupancy begins. Enter 0 to disable Optimal Start.	1 hr	0 to 4 hrs
Optimal Start Type: The method used to change from unoccupied to occupied setpoint. ***Options:*** **None:** Unit will not change to occupied setpoint until the scheduled time or the unit goes into an occupied mode. Setpoints do not ramp, but change immediately from unoccupied to occupied values. **Temp Compensated**: Unit changes to occupied setpoints at a variable time prior to the occupied time, which is calculated by the current difference between space temperature and the appropriate heating or cooling setpoint. At that time, the setpoints do not ramp, but change immediately from unoccupied to occupied values. **Learning Adaptive Start**: Unit gradually changes to occupied setpoints by adjusting the unoccupied setpoints over a specified period of time to achieve the occupied setpoint by the time scheduled occupancy begins.	Temp. Compensated	None, Temp. Compensated, Learning Adaptive
Heat Start K factor (min/deg): If **Optimal Start Type** is **Temp Compensated**, this is the time in minutes per degree that the equipment starts before the occupied period when the space temperature is below the occupied heating setpoint (including any setpoint offset).	15	0 to 99
Cool Start K factor (min/deg): If **Optimal Start Type** is **Temp Compensated**, this is the time in minutes per degree that the equipment starts before the occupied period when the space temperature is above the occupied cooling setpoint (including any setpoint offset).	15	0 to 99
Occupied Relative Humidity Setpoint: The control setpoint used during occupied periods.	60%	0 to 100%
Unoccupied Relative Humidity Setpoint: The control setpoint used during unoccupied periods.	95%	0 to 100%
DCV Start Ctrl Setpoint: The value that the CO_2 level must exceed to begin the IAQ control function.	500 ppm	0 to 9999 ppm
DCV Max Ctrl Setpoint: The value that the CO_2 level must exceed for the IAQ function to control the damper to its DCV Max Vent Damper Pos.	1050 ppm	0 to 9999 ppm

Table 19 — Unit Configuration

POINT NAME/DESCRIPTION	DEFAULT	RANGE
i-Vu® / Field Assistant Navigation: Properties → Control Program →Configuration → Unit Configuration		
Heat Enable: Enables or disables heating operation.	Enable	Enable/Disable
Cool Enable: Enables or disables cooling operation.	Enable	Enable/Disable
Fan Mode: The supply fan's operating mode. **Auto:** The fan cycles on/off in conjunction with heating or cooling. **Continuous:** The fan runs continuously during occupancy and intermittently during unoccupied periods with heating or cooling. **Always On:** The fan runs continuously regardless of occupancy or calls for heating and cooling.	Continuous	Auto, Continuous, Always On
Fan On Delay: How long the fan should delay starting after heating or cooling starts.	10 sec	0 to 30 seconds
Fan Off Delay: How long the supply fan runs after receiving a valid stop command.	90 sec	0 to 180 seconds
Minimum Cooling SAT: In cooling mode, the cooling outputs are controlled so that the supply air temperature does not drop below this value.	50°F	40 to 60°F
Maximum Heating SAT: In heating mode, the heating outputs are controlled so the supply air temperature does not rise above this value.	110°F	40 to 140°F
Occupied Heating: Occupied Heating SAT control operates the same as Morning Warm-up, except that occupied heating can occur any time during the occupied period if enabled. The SAT setpoint is reset between the control temperature and the heating maximum limit (max heat sat limit minus 5 degrees) to maintain control temperature.	Disable	Enable, Disable
Static Pressure Reset: Enables or disables the Static Pressure Reset operation.	Disabled	Enable, Disable
Maximum Damper Position: The maximum allowable system damper position.	80%	0 to 100%
Minimum Damper Position: The minimum allowable system damper position.	50%	0 to 100%
Maximum Reset: The maximum static pressure reset allowed.	0.25 in. H_2O	0-0.5 in. H_2O
SP Reset Demand Level: Sets the Static Pressure Reset Demand Level	Not Active	Not Active, Cool Demand Level 1, Cool Demand Level 2, Cool Demand Level 3
Supply Air Temp Reset: Enable or disables supply air temp reset operation.	Disabled	Enable, Disable
Reset Ratio: The supply air temp cooling setpoint reset ratio.	3	0 to 10
Reset Maximum Limit: The supply air temp cooling setpoint reset maximum limit.	10°F	0-25°F
Clg Off Hysteresis (SAT): The hysteresis setting to disable compressors in VAV configuration.	4°F	0 to 5°F
Vent Damper Pos/DCV Min Pos: The minimum outdoor air damper position maintained during occupied periods.	20%	0 to 100%
DCV Max Vent Damper Pos: The maximum outdoor air damper position allowed while DCV is active.	100%	0 to 100%
Filter Service Alarm Timer: The amount of time the fan will run before generating a **Filter Alarm**. Set to 0 to disable the alarm and reset accumulated fan hours.	600 hr	0 to 10000 hr
Compressor 1 Service Alarm Timer: The amount of time compressor 1 will run before generating a Compressor 1 Runtime Alarm.	500 hr	0 to 10000 hr
Compressor 2 Service Alarm Timer: The amount of time compressor 2 will run before generating a Compressor 2 Runtime Alarm.	500 hr	0 to 10000 hr
Compressor 3 Service Alarm Timer: The amount of time compressor 3 will run before generating a Compressor 3 Runtime Alarm.	500 hr	0 to 10000 hr
Compressor 4 Service Alarm Timer: The amount of time compressor 4 will run before generating a Compressor 4 Runtime Alarm.	500 hr	0 to 10000 hr
Setpoint Adjustment: Enables or disables the setpoint adjustment mechanism on the local space sensor.	Enable	Enable/Disable
Setpoint Adjustment Range: The maximum amount that a user can adjust the setpoint on the local SPT sensor.	5°F	0 to 5°F
Cooling Lockout Temperature: Cooling is inhibited below this outdoor air temperature.	45°F	–65 to 80°F
Heating Lockout Temperature: Heating is inhibited above this outdoor air temperature.	65°F	35 to 150°F
Power Fail Restart Delay: How long the controller delays normal operation after the power is restored.	180 seconds	0 to 600 seconds
Occupied Override Delay: The amount of time the controller remains occupied after the remote occupancy switch returns to the unoccupied position.	15 minutes	0 to 240 minutes
Occupancy Schedules: If enabled, the unit runs as occupied 24/7 until another occupancy control is configured.	Enable	Enable/Disable
SENSOR CALIBRATION		
Space Temperature: The current space temperature.	—	–56 to 245°F
Space Temp Calibration: A calibration offset value to allow the local space temperature sensor to be adjusted to match a calibrated standard measuring the temperature in the same location.	0°F	–9.9 to 10°F
Supply Air Temperature: Displays the current supply air temperature.	—	–56 to 245°F
Supply Air Temp Calibration: A calibration offset value to allow the supply air temperature sensor to be adjusted to match a calibrated standard measuring the temperature in the same location.	0°F	–9.9 to 10°F
Return Air Temperature: Displays the current return air temperature.	—	–56 to 245°F
Return Air Temp Calibration: A calibration offset value to allow the return air temperature sensor to be adjusted to match a calibrated standard measuring the temperature in the same location.	0°F	–9.9 to 10°F
Leaving Condition Water Temperature: The current leaving condenser water temperature.	—	–56 to 245°F
Leaving Source Water Temp Calibration: A calibration offset value to allow the leaving source water temperature sensor to be trimmed to match a calibrated standard measuring the temperature in the same location.	0°F	–9.9 to 10°F
Entering Condition Water Temperature: The current entering condenser water temperature.	—	–56 to 245°F
Entering Condition Temp Calibration: A calibration offset value to allow the entering condenser water temperature sensor to be trimmed to match a calibrated standard measuring the temperature in the same location.	0°F	–9.9 to 10°F
Static Pressure: A calibration offset.	—	0 to 5 in. H_2O
Static Pressure Calibration: A calibration offset value to allow the entering condenser water temperature sensor to be trimmed to match a calibrated standard measuring the temperature in the same location.	0 in. H_2O	0 to 0.2 in. H_2O
Space Relative Humidity: Displays the current value of relative humidity sensor, if present.	—	0 to 100%rh
Space RH Calibration: A calibration offset value that allows you to trim the local relative humidity sensor to match a calibrated standard measuring the space relative humidity in the same location.	0%rh	–9.9 to 10%rh

Table 20 — Service Configuration

POINT NAME/DESCRIPTION	DEFAULT	RANGE
i-Vu® / Field Assistant Navigation: Properties → Control Program → Configuration → Service Configuration		
Unit Type: The type of unit installed.	CV	CV, VAV
CV Supply Fan Low Speed Setting: The fan speed setting during low speed operation.	50%	0 to 100%
CV Supply Fan Medium Speed Setting: The fan speed setting during medium speed operation.	66%	0 to 100%
CV Supply Fan High Speed Setting: The fan speed setting during high speed operation.	100%	0 to 100%
Hot Water Coil: The type of hot water coil installed.	Modulating	None, Modulating
Min VFD Output: The minimum VFD speed allowed.	25%	15%-100%
Max VFD Output: The maximum VFD speed allowed.	100%	15% - 100%
Enable Supply Fan Status Function?: Allows fan status, if installed, to be used.	No	No, Yes
Supply Fan Status Normal Logic State: Sets the normal logic state of the Supply Fan Status input.	Closed	Open, Closed
Enable CW Valve Feedback Function?: Allows CW Valve feedback, if installed, to be used.	No	No, Yes
CW Valve Status Normal Logic State: Sets the normal logic state of the CW Valve Status input.	Open	Open, Closed
CW Differential Pressure Switch: Allows CW differential pressure switch, if installed, to be used.	None	None, Installed
CW DP Switch Normal Logic State: Sets the normal logic state of the CW DP Switch input.	Closed	Open, Closed
Remote Occupancy Normal Logic State: Sets the normal logic state of the Remote Occupancy input.	Open	Open, Closed
Smoke Detector Input Normal Logic State: Sets the normal logic state of the Smoke Detector input.	Open	Open, Closed
Supply Fan Overload Function: Allows SF Overload input to be used.	Disable	Disable/Enable
Supply Fan Overload Normal Logic State: Sets the normal logic state of the Supply Fan Overload input.	Closed	Open, Closed
Supply Hi Static Switch: Allows supply hi static switch, if installed, to be used.	None	Installed, None
Supply Hi Static Normal Logic State: Sets the normal logic state of the Supply Hi Static input.	Closed	Open, Closed
Filter Status Normal Logic State: Sets the normal logic state of the Filter Status input.	Open	Open, Closed
Reversing Valve: Allows reversing valve, if installed, to be used.	Installed	Installed, None
Hot Gas Reheat: Allows hot gas reheat, if installed, to be used.	Installed	Installed, None
Compressor Stages: The number of stages of compression.	Two Stages	Two Stages, Four Stages
Water Side Economizer: The water side economizer type.	None	None, 2-Pos
Ventilation Damper Type: The ventilation damper control being used.	None	None, 2-Pos, DCV
Hardwired Humidity Sensor: Set to **Installed** if a humidity sensor is present.	N/A	N/A, Installed
Min Setpoint Separation: Minimum separation that must be maintained between the heating and cooling setpoints.	5°F	2 to 10°F
Min Condition Water Temp Heating: Determines the minimum condenser water temperature before the unit starts heating.	50°F	25 to 60°F
Max Condition Water Temp Heating: Determines the maximum condenser water temperature before the unit starts heating.	80°F	65 to 100°F
Min Condition Water Temp Cooling: Determines the minimum condenser water temperature before the unit starts cooling.	50°F	30 to 60°F
Max Condition Water Temp Cooling: Determines the maximum condenser water temperature before the unit starts cooling.	105°F	85 to 120°F
CO_2 Sensor Min Input (V): Voltage representing the minimum CO_2 value.	0-v	0 to 10-v
CO_2 Sensor Max Input (V): Voltage representing the maximum CO_2 value.	5-v	0 to 10-v
CO_2 Sensor Value at Min Voltage: CO_2 value that corresponds to the minimum input voltage.	0 ppm	0 to 9999 ppm
CO_2 Sensor Value at Max Voltage: CO_2 value that corresponds to the maximum input voltage.	2000 ppm	0 to 9999 ppm
Static Pressure Sensor Value at Min Voltage: Static pressure value that corresponds to the minimum input voltage.	0 in. H_2O	0 to 5 in. H_2O
Static Pressure Sensor Value at Max Voltage: Static pressure value that corresponds to the maximum input voltage.	5 in. H_2O	0 to 5 in. H_2O
NETWORK VALUES		
System Space Temperature: The network space temperature value that the controller is using for control (if applicable).	–999.00°F	N/A
System Setpoint Adjustment: The space temperature setpoint adjustment value received over the network.	–999.00°F	–5 to 5°F
System Space RH: Allows using another controller's relative humidity value over the network. The remote controller must be equipped with a network-accessible relative humidity sensor value.	–999	2 to 100%
System Space IAQ: Allows this controller to use a CO_2 value from another controller over the network. The remote controller must be equipped with a network-accessible CO_2/IAQ sensor value.	–999	300 to 9999 ppm
System Cool Demand Level: The system cool demand level being received over the network.	0	0 to 3
System Heat Demand Level: The system heat demand level being received over the network.	0	0 to 3
System Outdoor Air Temperature: The OAT received over the network.	–999.00°F	N/A
System Occupancy: The status of the System Occupancy network point.	Unoccupied	Unoccupied/Occupied
SERVICE TEST		
Service Test: Enable to stop automatic control so you can test the controller's outputs. Automatically resets to **Disable** after 1 hour.	Disable	Disable/Enable
Fan Test: Enable to test the controller's fan speeds. Sequences fan from low to high speed and operates at each speed for 1 minute. Resets to **Disable** when complete. **Service Test** must be set to **Enable**.	Disable	Disable/Enable
Supply Fan Speed: The commanded state of the supply fan.	—	Off, Low, Med, High, On
Compressor Test: Enable to test compressor cooling and heating operation. Sequences cooling stage 1, then stage 2, then heating stage 2 and reduces capacity to stage 1. Operates each step for 1 minute. Resets to **Disable** when complete. **Service Test** must be set to **Enable**.	Disable	Disable/Enable
Compressor Test Mode: Displays which mode is being tested by the Compressor Test function.	—	Heating, Cooling, Inactive, Dehumid, TG Wait
HGRH Test: Enable to test compressor cooling and heating operation. Sequences cooling stage 1, then stage 2, then heating stage 2 and reduces capacity to stage 1. Operates each step for 1 minute. Resets to **Disable** when complete. **Service Test** must be set to **Enable**.	Disable	Disable/Enable
Aux Heat Test: Enable to test compressor cooling and heating operation. Sequences cooling stage 1, then stage 2, then heating stage 2 and reduces capacity to stage 1. Operates each step for 1 minute. Resets to **Disable** when complete. **Service Test** must be set to **Enable**.	Disable	Disable/Enable
Economizer Test: Enable to test compressor cooling and heating operation. Sequences cooling stage 1, then stage 2, then heating stage 2 and reduces capacity to stage 1. Operates each step for 1 minute. Resets to **Disable** when complete. **Service Test** must be set to **Enable**.	Disable	Disable/Enable
Preload OA Damper: Enable to test.	Disable	Disable/Enable
Open Vent Damper 100%: Enable to test.	Disable	Disable/Enable

Table 21 — Alarms

POINT NAME/DESCRIPTION	DEFAULT	RANGE
i-Vu® / Field Assistant Navigation: Properties → Control Program → Alarms		
Supply Fan Failure: Indicates an alarm condition if the supply fan's status fails to match the fan's commanded state when ON.	—	Normal/Alarm
Fire/Smoke Shutdown: Indicates if the unit is in a **Fire/Smoke Shutdown** condition.	—	Normal/Alarm
Condenser Valve Failure: Indicates an alarm condition if the condenser valve's status fails to match the valve's commanded state when OPEN.	—	Normal/Alarm
Hi Static Pressure Shutdown: Indicates the unit is shut down due to high static pressure.	—	Normal/Alarm
Low Static Pressure Shutdown: Indicates the unit is shut down due to low static pressure.	—	Normal/Alarm
Reset Low Static Pressure Shutdown: Resets the low static pressure shutdown alarm.	Off	Off/Reset
Indoor Air Quality: Indicates if the occupied CO_2 level exceeds the Occupied High CO_2 Alarm Limit.	—	Normal/Alarm
High Space Temperature: Indicates if the space temperature sensor exceeds the high alarm limit.	—	Normal/Alarm
Low Space Temperature: Indicates if the space temperature sensor exceeds the low alarm limit.	—	Normal/Alarm
Alarming Temperature: The value of the alarming space temperature sensor. Visible only in an alarm condition.	—	The sensor's range
Alarm Limit Exceeded: The alarm limit that the alarming space temperature sensor exceeded. Visible only in an alarm condition.	—	–60 to 250°F
Supply Air Temperature: Indicates if the supply air temperature drops below the **Low SAT Alarm Limit** or exceeds the **High SAT Alarm Limit**.	—	Normal/Alarm
Return Air Temperature: Indicates if the return air temperature drops below the **Low RAT Alarm Limit** or exceeds the **High RAT Alarm Limit**.	—	Normal/Alarm
Cond. Water Temperature: Indicates if the condenser water temperature exceeds the Min/Max Condenser Water Temp Heating or Min/Max Condenser Water Temp Cooling values.	—	Normal/Alarm
Space Relative Humidity: Indicates if the space relative humidity drops below the **Low RH Alarm Limit** or exceeds the **High RH Alarm Limit**.	—	Normal/Alarm
Control Temp Sensor Failure: Indicates if the controlling temperature sensor has failed.	—	Normal/Alarm
ZS Temp Sensor Failure: Indicates if the ZS temperature sensor has failed.	—	Normal/Alarm
ZS Sensor Configuration: Indicates a ZS temperature sensor is not communicating.	—	Normal/Alarm
Supply Air Temp Sensor Failure: Indicates if the supply air temperature sensor has failed.	—	Normal/Alarm
Return Air Temp Sensor Failure: Indicates if the return air temperature sensor has failed.	—	Normal/Alarm
Static Pressure Sensor Failure: Indicates if the static pressure sensor has failed.	—	Normal/Alarm
CO_2 Sensor Failure: Indicates if the CO_2 sensor has failed.	—	Normal/Alarm
Outdoor Air Temp Sensor Failure: Indicates if the controller is no longer receiving a valid outdoor air temperature value either through the network or from a local sensor.	—	Normal/Alarm
Airside Linkage: Indicates if Airside Linkage fails.	—	Normal/Alarm
Source Water Linkage: Indicates if Source Water Linkage has failed.	—	Normal/Alarm
Overload Shutdown: Indicates the Supply Fan Overload Shutdown input is on.	—	Normal/Alarm
Unit Protection Module 1 Alarm: Indicates the UPM 1 Alarm input is on.	—	Normal/Alarm
Unit Protection Module 2 Alarm: Indicates the UPM 2 Alarm input is on.	—	Normal/Alarm
Compressor 1 Failure: Indicates compressor 1 is commanded on but the status is off.	—	Normal/Alarm
Compressor 2 Failure: Indicates compressor 2 is commanded on but the status is off.	—	Normal/Alarm
Compressor 3 Failure: Indicates compressor 3 is commanded on but the status is off.	—	Normal/Alarm
Compressor 4 Failure: Indicates compressor 4 is commanded on but the status is off.	—	Normal/Alarm
Compressor 1 Runtime Alarm: Indicates compressor 1 runtime limit has been exceeded.	—	Normal/Alarm
Compressor 2 Runtime Alarm: Indicates compressor 2 runtime limit has been exceeded.	—	Normal/Alarm
Compressor 3 Runtime Alarm: Indicates compressor 3 runtime limit has been exceeded.	—	Normal/Alarm
Compressor 4 Runtime Alarm: Indicates compressor 4 runtime limit has been exceeded.	—	Normal/Alarm
Filter: Indicates a dirty filter condition when the filter runtime exceeds the value of the **Filter Service Alarm Timer**.	—	Clean/Dirty

Table 22 — Alarm Configuration

POINT NAME/DESCRIPTION	DEFAULT	RANGE
i-Vu® / Field Assistant Navigation: Properties → Control Program → Configuration → Alarm Configuration		
SPACE TEMPERATURE (SPT) ALARM		
SPT Occupied Alarm Hysteresis: This value is added to the occupied high effective setpoint and subtracted from the occupied low effective setpoint to establish the occupied high and low limits that the space temperature must exceed before an occupied SPT alarm is generated. The alarm returns to normal when the space temperature drops below the high effective setpoint or rises above the low effective setpoint.	5°F	2 to 20°F
SPT Alarm Delay (min/deg): Determines the amount of delay before an occupied space temperature alarm is generated when the controller transitions to the occupied mode. The delay time equals this value multiplied by the difference between the sensor temperature and occupied alarm setpoint plus 15 minutes.	10 minutes	0 to 30 minutes
Unoccupied Low SPT Alarm Limit: The value that the space temperature must drop below to generate a **Space Temperature Alarm** in the unoccupied mode. There is a fixed hysteresis of 1 Δ°F (0.5 Δ°C) for return to normal.	45°F	15 to 90°F
Unoccupied High SPT Alarm Limit: The value that the space temperature must exceed to generate a **Space Temperature Alarm** in the unoccupied mode. There is a fixed hysteresis of 1 Δ°F (0.5 Δ°C) for return to normal.	95°F	45 to 100°F
SUPPLY AIR TEMPERATURE (SAT) ALARM		
Low SAT Alarm Limit: The value that the supply air temperature must drop below to generate a **Supply Air Temp Alarm**. There is a fixed hysteresis of 3 Δ°F (1.6 Δ°C) for return to normal.	45°F	15 to 90°F
High SAT Alarm Limit: The value that the supply air temperature must exceed to generate a **Supply Air Temp Alarm**. There is a fixed hysteresis of 3 Δ°F (1.6 Δ°C) for return to normal.	120°F	90 to 175°F
RETURN AIR TEMPERATURE (RAT) ALARM		
Low RAT Alarm Limit: The value that the return air temperature must drop below to generate a Return Air Temp Alarm. There is a fixed hysteresis of 3.	55°F	15 to 90°F
High RAT Alarm Limit: The value that the return air temperature must exceed to generate a Return Air Temp Alarm. There is a fixed hysteresis of 3.	120°F	90 to 175°F
STATIC PRESSURE (SP) ALARM		
SP Low Limit Trip Setpoint (Shutdown): The supply air static pressure low limit shutdown value.	0.10 in. H_2O	0.0 to 2.0 in. H_2O
SPACE HUMIDITY (RH) ALARM		
Occupied High RH Alarm Limit: The value that the relative humidity sensor must exceed to generate a **Space Relative Humidity** alarm in the occupied mode.	50%rh	45 to 100%rh
Unoccupied High RH Alarm Limit: The value that the relative humidity sensor must exceed to generate a **Space Relative Humidity** alarm in the unoccupied mode.	100%rh	0 to 100%rh
Alarm Delay (min/%RH): Determines the amount of delay before an occupied RH alarm is generated when the controller transitions to the occupied mode. The delay time equals this value multiplied by the difference between the sensor RH value and the occupied RH setpoint plus 15 minutes.	5	0 to 30
IAQ / VENTILATION ALARM		
Occupied High CO_2 Alarm Limit: The value that the CO_2 sensor must exceed to generate an Indoor Air Quality Alarm in the occupied mode if DCV Control is set to Enable. There is a fixed hysteresis of 100ppm for return to normal.	1100 ppm	0 to 9999 ppm
Alarm Delay (min/ppm): The fractional portion of a minute used to determine the amount of delay before an indoor air quality alarm is generated when the controller transitions to the occupied mode. The delay time equals this value multiplied by the difference between the sensor CO_2 value and the setpoint plus 15 minutes.	0.25	0.1 to 1.0
ALARMS DISPLAYED ON ZS SENSOR		
Fire/Smoke Alarm: If set to display, shows the alarm indicator on the communicating zone sensors, if the **Fire/Smoke Alarm** is active.	Display	Ignore/Display
Space Temperature Alarm: If set to display, shows the alarm indicator on the communicating zone sensors, if the **Space Temperature** alarm is active.	Display	Ignore/Display
Supply Air Temp Alarm: If set to display, shows the alarm indicator on the communicating zone sensors, if the **Supply Air Temp** alarm is active.	Display	Ignore/Display
Supply Fan Alarm: If set to display, shows the alarm indicator on the communicating zone sensors with display, if the **Supply Fan Failure** alarm is active.	Display	Ignore/Display
CW Valve Fail: If set to display, shows the alarm indicator on the communicating zone sensors with display, if the **Supply Fan Failure** alarm is active.	Display	Ignore/Display
Compressor Alarm: Shows the alarm indicator on the communicating zone sensors with display, if the compressor lockout is in alarm.	Display	Ignore/Display
Source Water Temp Alarm: If set to display, shows the alarm indicator on the communicating zone sensors with display, if the **Source Water Temperature** is in alarm.	Display	Ignore/Display
Return Air Temp Alarm: If set to display, shows the alarm indicator on the communicating zone sensors, if the **Return Air Temp** alarm is active.	Display	Ignore/Display
Static Pressure Alarm: If set to display, shows the alarm indicator on the communicating zone sensors, if the **Static Pressure** alarm is active.	Display	Ignore/Display

Table 22 — Alarm Configuration (cont)

POINT NAME/DESCRIPTION	DEFAULT	RANGE
i-Vu® / Field Assistant Navigation: Properties → Control Program → Configuration → Alarm Configuration		
Space High Humidity Alarm: If set to display, shows the alarm indicator on the communicating zone sensors with display, if the **Space Relative Humidity** alarm is active.	Display	Ignore/Display
Space High CO_2 Alarm: If set to display, shows the alarm indicator on the communicating zone sensors with display if the **Space CO2** is in alarm.	Display	Ignore/Display
MAINTENANCE DISPLAYED ON ZS SENSOR		
Air Side Linkage Fault: If set to display, shows the maintenance indicator on a ZS Sensor with display, if the Airside Linkage is in a Fault condition.	5°F	2 to 20°F
Sensor Fault: If set to display, shows the maintenance indicator on a ZS Sensor with display, if the zone temperature sensor reading is not valid.	10 minutes	0 to 30 minutes
Source Linkage Fault: If set to display, shows the maintenance indicator on a ZS Sensor with display, if the Source Linkage is in a Fault condition.	45°F	15 to 90°F
Dirty Filter Alarm: If set to display, shows the alarm indicator on the communicating zone sensors, if a **Filter** alarm is active.	95°F	45 to 100°F
Compressor 1 Runtime Alarm: Indicates compressor 1 runtime limit has been exceeded.	Ignore	Ignore/Display
Compressor 2 Runtime Alarm: Indicates compressor 2 runtime limit has been exceeded.	Ignore	Ignore/Display
Compressor 3 Runtime Alarm: Indicates compressor 3 runtime limit has been exceeded.	Ignore	Ignore/Display
Compressor 4 Runtime Alarm: Indicates compressor 4 runtime limit has been exceeded.	Ignore	Ignore/Display

Table 23 — Maintenance

POINT NAME/DESCRIPTION	DEFAULT	RANGE
i-Vu® / Field Assistant Navigation: Properties → Control Program → Maintenance		
Occupancy Status: The controller's occupancy status as determined by a network schedule, a local schedule, or a timed override.	—	Occupied/Unoccupied
Control Temp Source: The source of the controlling space temperature value.	—	Sensor Failure, Space, Return Air, Linkage Zone, Locked Value
Space Temp Source: The source of the controlling space temperature. • **N/A:** No valid space temperature or sensor status = failed. • **Network:** A network temperature sensor is bound to the controller's space temperature AV. • **ZS Sensor:** A ZS sensor is connected to the controller's Rnet port.	—	N/A, Network, ZS Sensor
SAT Source: The source of the controlling supply air temperature value. • **N/A:** No sensor value associated with this device. • **Net/System SAT:** A network sensor value provided to this controller. • **Local:** A physical sensor is wired and connected to the appropriate input channel of this controller. • **Locked Value:** The controller's sensor input is manually locked to a specific value.	—	N/A, Network, Local SAT, Locked Value
RAT Source: The source of the controlling return air temperature value. • **N/A:** No sensor value associated with this device. • **Net/System SAT:** A network sensor value provided to this controller. • **Local:** A physical sensor is wired and connected to the appropriate input channel of this controller. • **Locked Value:** The controller's sensor input is manually locked to a specific value.	—	N/A, Network, Local RAT, Locked Value
IAQ Source: The source of the controlling IAQ value. • **N/A:** No sensor value associated with this device. • **Local:** A physical sensor is wired and connected to the appropriate input channel of this controller. • **Network:** A network sensor value provided to this controller. • **Linkage:** The sensor value from an active Linkage connection, such as Airside Linkage. • **Locked Value:** The controller's sensor input is manually locked to a specific value. • **ZS Sensor:** A ZS sensor is connected to the controller's Rnet port.	—	N/A, Local, Network, Linkage, Locked Value, ZS Sensor
Relative Humidity Source: The source of the relative humidity value. • **N/A:** No sensor value associated with this device. • **Local:** A physical sensor is wired and connected to the appropriate input channel of this controller. • **Network:** A network sensor value provided to this controller. • **Linkage:** The sensor value from an active Linkage connection, such as Airside Linkage. • **Locked Value:** The controller's sensor input is manually locked to a specific value. • **ZS Sensor:** A ZS sensor is connected to the controller's Rnet port.	—	N/A, Local, Network, Linkage, Locked Value, ZS Sensor
Outdoor Air Temperature Source: The source of the OAT value. • **N/A:** No sensor value associated with this device. • **Local:** A physical sensor is wired and connected to the appropriate input channel of this controller. • **Network:** A network sensor value provided to this controller. • **Linkage:** The sensor value from an active Linkage connection, such as Airside Linkage. • **Locked Value:** The controller's sensor input is manually locked to a specific value.	—	N/A, Local, Network, Linkage, Locked Value
Current Static Pressure Setpoint: The current static pressure setpoint.	—	_in H_2O
Effective Supply Air Temp Setpoint: The current supply air temp setpoint being used in VAV mode.	—	_°F/C
SAT Reset Value: The value by which the supply air temp setpoint is currently reset.	—	_°F/C
Calculated Static Pressure Reset: The value by which the static pressure setpoint is reset.	—	_in H_2O
Temp Compensated Start: Indicates if temp compensated start algorithm is active or inactive.	—	Inactive/Active
Learning Adaptive Start: Indicates if learning adaptive start algorithm is active or inactive.	—	Inactive/Active
Setpoint Adjustment: The amount that a user has adjusted the setpoints at a zone sensor.	—	–56 to 245°F
Effective Heat Setpoint: The current heating setpoint. May include offsets from the configured occupied/unoccupied setpoints resulting from **Optimal Start** or **Demand Limit**.	—	_°F/C
Effective Cool Setpoint: The current cooling setpoint. May include offsets from the configured occupied/unoccupied setpoints resulting from **Optimal Start** or **Demand Limit.**	—	_°F/C
Demand Limit: The system has received over-the-network demand limiting request.	—	Inactive/Active
System Cooling Demand Level: The current system cooling demand level used by this control. NOTE: Not shown if current level is 0.	—	0 to 3
System Heating Demand Level: The current system heating demand level used by this control. NOTE: Not shown if current level is 0.	—	0 to 3
Aux Heat Control Setpoint: The calculated setpoint being used for auxiliary heating control.	—	72.5 to 105°F
Water Economizer Control Setpoint: The calculated setpoint being used for economizer control.	—	55 to 72.4°F
Calculated DCV Damper Position: The calculated damper position being used for DCV control.	—	0 to 100%
CW Valve Status: The current status of the CW valve.	—	Closed/Open
CW Flow Switch: The current status of the CW flow switch.	—	No Flow/Flow
Active Compressor Stages: The number of compressor stages currently operating.	—	0, 1, 2, 3, 4
Compressor 1 Status: The status of compressor 1.	—	Off/On
Compressor 2 Status: The status of compressor 2.	—	Off/On
Compressor 3 Status: The status of compressor 3.	—	Off/On

Table 23 — Maintenance (cont)

POINT NAME/DESCRIPTION	DEFAULT	RANGE
i-Vu® / Field Assistant Navigation: Properties → Control Program → Maintenance		
Compressor 4 Status: The status of compressor 4.	—	Off/On
Smoke Detector Input: The current state of the smoke detector input (if present).	—	Off/On
Supply Fan Overload Input: The current state of the supply fan overload shutdown input.	—	Off/On
Filter Status Input: The current state of the filter status input.	—	Clean/Dirty
Reset Filter Runtime Alarm: Set this to **On** to reset an active **Filter Alarm** and restart the **Filter**	—	Off
Service Alarm Timer: After the alarm returns to normal, this automatically changes to **Off**.	—	Off/On
Filter Runtime: Current operating hours on the filter.	—	0 to 10000 hr
Reset Comp 1 Runtime Alarm: Set this to **Clear** to reset an active runtime alarm.	—	Run/Clear
Compressor 1 Runtime: Current operating hours on compressor 1.	—	0 to 10000 hr
Reset Comp 2 Runtime Alarm: Set this to **Clear** to reset an active runtime alarm.	—	Run/Clear
Compressor 2 Runtime: Current operating hours on compressor 2.	—	0 to 10000 hr
Reset Comp 3 Runtime Alarm: Set this to **Clear** to reset an active runtime alarm.	—	Run/Clear
Compressor 3 Runtime: Current operating hours on compressor 3.	—	0 to 10000 hr
Reset Comp 4 Runtime Alarm: Set this to **Clear** to reset an active runtime alarm.	—	Run/Clear
Compressor 4 Runtime: Current operating hours on compressor 4.	—	0 to 10000 hr
OCCUPANCY		
BAS On/Off: Determines the occupancy state of the controller and can be set over the network by another device or third party BAS. **Inactive:** Occupancy is determined by a configured schedule. **Occupied:** The controller is always in the occupied mode. **Unoccupied:** The controller is always in the unoccupied mode. NOTE: If BAS On/Off is set to either Unoccupied or Occupied, the Optimal Start routine is automatically disabled.	Inactive	Inactive, Occupied, Unoccupied
Schedules: The status of the schedule.	—	Occupied/Unoccupied
Pushbutton Override: **Active** indicates if a user pushed the sensor's override button to override the occupancy state.	—	Off/Active
Override Time Remaining: The minutes left that the equipment runs, if activated by override.	—	0 to 960:00 mm:ss
Occupancy Contact: The occupied/unoccupied status of the **Occupancy Contact** switch.	Inactive	Inactive, Active Occupied
System Occupancy: The status of the **System Occupancy** network point.	Inactive	Inactive, Active Occupied
Local BACnet Schedule	—	Off/On
SENSOR CONFIGURATION		
Configure ZS Sensors by setting the following options in the Local BACnet Schedule microblock popup. Click Local BACnet Schedule to access the microblock popup Properties page → Details tab. Refer to the microblock manual for more detailed explanations.		
Allow Force Unoccupied: Check to allow a user to save energy by forcing the zone into an unoccupied schedule on the ZS sensor. The user does this by holding the sensor's On/Off button for at least 3 seconds. This forced state remains in effect until the schedule transitions to unoccupied or until a user presses the sensor's On/Off button again.	Enabled	Disabled/Enabled
Force Unoccupied without Delay: Check to allow a user to force a zone to unoccupied immediately instead of the normal 3-second delay. NOTE: This option is not available if Allow TLO Set During Occupied is checked.	Enabled	Disabled/Enabled
TIMED LOCAL OVERRIDE		
Increment: Minutes that the microblock adds to the zone's occupied time for each click of the zone's local override button or switch.	30:00 mm:ss	—
Maximum Duration: Maximum value (up to 960 minutes) the microblock outputs, regardless of additional pulses from the controller's input.	60:00 mm:ss	0 to 960:00 mm:ss

Table 24 — Linkage Configuration

POINT NAME/DESCRIPTION	DEFAULT	RANGE
i-Vu® / Field Assistant Navigation: Properties → Control Program → Configuration → Service Configuration		
AIRSIDE LINKAGE		
Airside Linkage Collector: Set the **Number of Providers** to zero (0). This value MUST be set to zero in this device and it will receive information from a single VVT Primary zone.	0	0 to 32
Airside Linkage: If **Active**, the controller is part of a linked system. If **Not Active**, the controller is a stand-alone device.	—	Active/Not Active
Air Source Mode: Displays the operating mode of this equipment as reported to Linkage.	—	Off, Warmup, Heat, Cool, Freecool, Pressure, Evac, Vent
Air Source Supply Air Temp: Displays the supply air temperature value reported to Linkage.	—	–56 to 245°F
Space Temperature: Displays the space temperature value reported to Linkage.	—	–56 to 245°F
Occupied Cooling Setpoint: Displays the occupied cooling setpoint value reported to Linkage.	—	55 to 90°F
Occupied Heating Setpoint: Displays the occupied heating setpoint value reported to Linkage.	—	55 to 90°F
Unoccupied Cooling Setpoint: Displays the unoccupied cooling setpoint value reported to Linkage.	—	55 to 90°F
Unoccupied Heating Setpoint: Displays the unoccupied heating setpoint value reported to Linkage.	—	55 to 90°F
Indoor Air CO_2: Displays the indoor air CO_2 value reported to Linkage.	—	0 to 9999 ppm
Space Relative Humidity: Displays the space relative humidity value reported to Linkage.	—	0 to 100%rh
SOURCE WATER LINKAGE		
Waterside Linkage Collector: Set the **Number of Providers** to the total number of controllers in the linked system. When configured, the controller can collect information from other WSHP Open controllers.	1	1 to 64
Waterside Linkage Provider: Allows access to configuration of a water linkage system and to the Provider's details. Enter the MS/TP **Network Number** and MAC **Address** of the controller that runs the Loop Pump Monitor control program. NOTE: If you change the Network Number or Address from a BACview device, you must cycle power to the controller for the changes to take effect.	—	—
Water Source: Network Number	0	0 to 65,534
Water Source: Collector MS/TP Address	0	0 to 99
Water Source: IP Address	0.0.0.0	0.0.0.0 to 255.255.255.255
Source Water Linkage: If **Active**, the controller is part of a linked system. If **Not Active**, the controller is a stand-alone device.	—	Active/Not Active
Loop Pump Request: Set to 1 if loop pumps are required to run.	—	0/1
Loop Pump Status: The actual status of the loop pumps.	—	Off/On
Heat Request: Set to 1 if this unit is required to operate in heating mode.	—	0/1
Cool Request: Set to 1 if this unit is required to operate in cooling mode.	—	0/1
Water Loop Temperature: Displays the actual temperature of the source water leaving the plant and entering this unit.	—	–56 to 245°F
Aux Heat Request: Set to 1 if this unit requires the auxiliary heat source to operate.	—	0/1
Aux Heat HW Pump Status: The actual state of the auxiliary heat (boiler) pump(s).	—	Off/On
Aux Heat Boiler Water Temp: Displays the actual temperature of the boiler water leaving the plant and entering this units auxiliary heating coil. A value of –999°F indicates the value is unavailable.	–999°F	–56 to 245°F
Outdoor Air Temp: Displays the outdoor air temperature being sent to this unit through **Source Water Linkage**. A value of –999°F indicates the value is unavailable.	–999°F	–56 to 245°F

CV SEQUENCE OF OPERATION

The following sequence of operation applies when the unit type is configured as CV (constant volume) for single-zone space temperature control.

Scheduling

Time periods must be configured to schedule the transitions from occupied to unoccupied operation. The time periods control the space temperature to occupied heating and cooling setpoints. The unit operates continuously in the Occupied mode until a time schedule is configured or a third-party control system enables/disables the BAS On/Off point. The local time and date for these functions must be set to operate properly. The occupancy source can be changed to one of the following:

OCCUPANCY SCHEDULES

The controller is occupied 24/7 until a time schedule is configured using either the Equipment Touch, Field Assistant, or the i-Vu® application, or a third-party enables/disables the BAS On/Off point. This can be disabled by going to ***Configuration→Unit Configuration→Occupancy Schedules,*** changing the point from Enable to Disable and clicking OK.

NOTE: You must Enable this point in order for the Equipment Touch, Field Assistant, or the i-Vu® application to assign a time schedule to the controller.

SCHEDULE_SCHEDULE

The unit operates according to the schedule configured and stored in the unit. The schedule is accessible via the Equipment Touch interface, the i-Vu® application, or Field Assistant technician tool. The daily schedule consists of a start and stop time (standard or 24-hour mode) and 7 days of the week, starting with Monday and ending on Sunday.

OCCUPANCY INPUT CONTACT (OPTION)

If configured for remote occupancy control (default), the unit can use an external dry contact closure to determine the occupancy status of the unit. You must disable the Occupancy Schedules in order to use the occupancy contact input. The unit enters an occupied mode when it senses the abnormal input. After the input returns to its normal state, the unit stays in the occupied mode for the configured OCC Override Delay period (15 minutes default).

BAS (BUILDING AUTOMATED SYSTEM) ON/OFF

For use with a Building Automation System that supports network scheduling, you must disable the Occupancy Schedules so the BAS system can control the unit through a network communication and the BAS scheduling function.

GLOBAL OCCUPANCY SCHEDULING

The unit can read the occupancy status from another unit so that a group of WSHPs (Water Source Heat Pumps) can be controlled from a single occupancy schedule. The local Occupancy Schedules must be disabled in order to use the global occupancy input.

BACNET NETWORK OCCUPANCY INPUT

The unit can accept an external BACnet Binary Network Input for occupancy control. This function is only compatible with units used in BACnet systems. You need to configure the System Occupancy BACnet network input point to locate the device and point name where the external occupancy point information resides. You must also disable Occupancy Schedules in order to use this input.

⚠ CAUTION

Scheduling can only be controlled from one source.

Indoor Fan Operation

AUTOMATIC FAN SPEED CONTROL

The unit controls 3 fan speeds (HI, MEDIUM, LOW). The motor operates at the lowest speed possible to provide quiet and efficient fan operation with the best latent capability. The motor increases speed if additional cooling or heating is required to reach the desired space temperature setpoint. The control increases the motor's speed by one step for each 2°F above the cooling or below the heating setpoint (adjustable thru property page or color bar). Control also increases the fan speed as the Supply Air Temperature approaches the configured minimum or maximum limits.

FAN MODES

The indoor fan can be configured to operate in any one of 3 Fan Modes:

- **Auto**: Intermittent operation during both occupied and unoccupied periods.
- **Continuous (default)**: Intermittent operation during unoccupied periods and continuous during occupied periods.
- **Always on**: Operates the fan continuously during both occupied and unoccupied periods.

In the Continuous default mode, the fan is turned on when any one of the following is true:

- It is in occupied mode, which is determined by the occupancy status.
- There is a demand for cooling or heating in the unoccupied mode.
- There is a call for dehumidification (optional).

FAN DELAY

When power is reapplied after a power outage, there is a configurable delay of 5-600 seconds (default 60) before starting the fan. You must configure the fan delay:

- **Fan On Delay**: Defines the delay time (0-30 seconds, default 10) before the fan begins to operate after heating or cooling is started.
- **Fan Off Delay**: Defines the delay time (0-180 seconds, default 90) the fan continues to operate after heating or cooling is stopped.

NOTE: The fan continues to run as long as the compressors, heating stages, or the dehumidification relays are on. If the Control Temp failure alarm, Fire/Smoke alarm, SA Temp Sensor failure alarm, SF Overload alarm, Static Sensor fail alarm, or Hi Static alarm is active, the fan is shut down immediately, regardless of occupancy state or demand.

Cooling Operation

The unit operates 2 or 4 stages of compression to maintain the desired cooling setpoint. The water side economizer (if equipped) is used as the 1-stage of cooling in addition to the compressors. The compressor outputs are controlled by the cooling stages capacity algorithm. The algorithm calculates the desired number of stages needed by comparing the control temperature to the appropriate cooling setpoint. The following conditions must be true for the cooling algorithm to run:

- Cooling is set to Enable.
- The Fire/Smoke Input and Shutdown modes are inactive.
- Heat mode is not active and the compressor time guard(s) have expired.
- The Water Flow Switch Status is True (if option is enabled).
- Condenser Water Valve End Switch Status is True (if option is enabled).
- Fan Status is True (if option is enabled).

- If occupied, the SPT or ZS is greater than the occupied cooling setpoint: CV.
- Space temperature reading is valid: CV.
- If unoccupied, the SPT or ZS is greater than the unoccupied cooling setpoint: CV.
- If economizer cooling is available and active, and the economizer alone is insufficient to provide enough cooling.
- OAT > Cooling Lockout Temperature if OAT is available.
- Source Water Pump is on (if Source Water Linkage is active).

If all the above conditions are met, the compressors' relays are energized as required. Otherwise, they will be de-energized. If cooling is active and if the SAT approaches the minimum SAT limit, the fan will be indexed to the next higher speed. If this is insufficient, and if the SAT falls further (equal to the minimum SAT limit), the fan will be indexed to the maximum speed. If the SAT still continues to fall 5°F below the minimum SAT limit, all cooling stages will be disabled.

The configuration screens contain the Min SAT parameter as well as Cooling Lockout based on outdoor air temperature (OAT). Both can be adjusted to meet various specifications.

COMPRESSOR DELAY

There is a 5-minute off-time for the compressor, as well as a 5-minute time delay, when staging up to allow the SAT to achieve a stable temperature, before energizing a second stage of capacity. Likewise, there is a 45 second delay when staging down.

After a compressor is staged off, it may be restarted again after a normal time-guard period of 5 minutes and if the supply air temperature has increased above the minimum supply air temperature limit.

WATER SIDE ECONOMIZER (WSE)

The controller provides 2-position water side economizer control providing free cooling when water conditions are optimal. Water side economizer settings can be accessed on ***Properties→Equipment →Status***. The following conditions must be true for economizer operation:

- SAT reading is available.
- EWT reading is available.
- If occupied, the ZS is greater than the occupied cooling setpoint and the source water is suitable.
- Space temperature reading is valid.
- If unoccupied, the ZS is greater than the unoccupied cooling setpoint and the source water is suitable.

The purpose of a WSE control is to provide a cooling economizer function directly from the source water loop when the entering water loop temperature is at least 5°F below space temperature. If the optional coil is provided and the water loop conditions are suitable, then the valve opens to provide cooling to the space, when required. If the capacity is insufficient for a period greater than 5 minutes, or if a high humidity condition occurs, the compressor is started to satisfy the load. If the SAT reaches the Minimum Cooling SAT limit, the economizer valve closes during compressor operation.

MODULATING HOT GAS REHEAT FOR DEHUMIDIFICATION (MHGRH)

The unit provides occupied and unoccupied dehumidification only on units that are equipped with the hot gas reheat option. This function requires an accessory hardwired space relative humidity sensor. When using a relative humidity sensor to control dehumidification during occupied or unoccupied times, the dehumidification setpoints are used accordingly. The ZS Humidity Sensor or a network input point System Space RH can also be used in place of the hardwired RH sensor.

When the indoor relative humidity becomes greater than the dehumidification setpoint, a dehumidification demand is acknowledged. Once acknowledged, the dehumidification output is energized, bringing on the supply fan (medium speed), mechanical cooling, and the hot gas reheat coil.

NOTE: During cooling mode, the unit cools and dehumidifies, and disables the reheat coil. However, once the call for cooling has been satisfied and there is still a call for dehumidification, the unit continues to operate in the reheat mode.

Heating Operation

The unit operates 2 or 4 stages of compression to maintain the desired heating setpoint. The compressor outputs are controlled by heating stages capacity algorithm. The algorithm calculates the desired number of stages needed by comparing the control temperature to the appropriate heating setpoint.

The following conditions must be true for the heating algorithm to run:

- Heating is set to Enable.
- The Fire/Smoke Input and Shutdown modes are inactive.
- Cool mode is not active, and the compressor time guard has expired.
- Fan Status is True (if option is enabled).
- Water Flow Switch Status is True (if option is enabled).
- Condenser Water Valve End switch Status is True (if option is enabled).
- If occupied, the SPT or ZS is less than the occupied heating setpoint.
- Space Temperature reading is valid.
- If unoccupied, the SPT or ZS is less than the unoccupied heating setpoint.
- OAT > Heating Lockout Temperature if OAT is available.
- Source Water Pump is on (if Source Water Linkage active).

If all the above conditions are met, the heating outputs are energized as required, otherwise they are de-energized. If heating is active and the SAT approaches the maximum SAT limit, the fan is indexed to the next higher speed. If this is insufficient, and if the SAT rises further and reaches the Maximum Heating SAT limit, the fan is indexed to the maximum speed. If the SAT continues to rise 5°F above the maximum limit, all heating stages are disabled. The configuration screens contain the Maximum SAT parameter as well as heating lockout based on outdoor air temperature (OAT). Both can be adjusted to meet various specifications.

COMPRESSOR DELAY

There is a 5-minute off-time for the compressor, as well as a 5-minute time delay, when staging up to allow the SAT to achieve a stable temperature, before energizing a second stage of capacity. Likewise, there is a 45 second delay when staging down.

After a compressor is staged off, it may be restarted again after a normal time-guard period of 5 minutes and if the supply air temperature has increased above the minimum supply air temperature limit.

AUXILIARY HOT WATER HEAT

Auxiliary heat operates if all reverse cycle heating compressors fail or the source water temperature is insufficient for reverse cycle heating, and in addition, it also operates to supplement the heat provided by the compressor, if the space temperature falls below the desired heating setpoint. The heat is controlled so the SAT does not exceed the Maximum Heating SAT limit.

VAV SEQUENCE OF OPERATION

The following sequence of operation applies when the unit type is configured as VAV for multi-zone variable air volume operation.

Occupancy

AIRSIDE LINKAGE

In the Open Airside Linkage mode, the controller receives its occupancy status from the zoning system through Airside Linkage.

STANDALONE

In the standalone mode with third-party air terminals occupancy is controlled by the following:

Always Occupied (default)

The controller operates continuously, regardless of any configured schedule.

BACnet Schedule

A separate occupancy schedule to determine when the unit is occupied and to determine which setpoints (occupied or unoccupied) should be used. An occupancy schedule may be:

- A local schedule configured in the controller using an Equipment Touch or Field Assistant interface.
- A BACnet schedule configured in the i-Vu® application, networked through an i-Vu® Open Router.

To set up occupancy schedules, see the documentation for the interface.

NOTE: A BACnet schedule downloaded from the i-Vu® application will overwrite a local schedule that was set up with an Equipment Touch or Field Assistant interface.

BAS On/Off

A network input multistate point (BAS ON/OFF) is provided for third-party BAS systems to interface to the control and manually set its occupancy state. The network input has three states. State 1 (default) is inactive. State 2 sets the unit to occupied mode. This will cause the control temperature to be compared to the configured occupied heating and cooling setpoints. State 3 will set the unit to go unoccupied and the RAT (or optional space temperature sensor) will be compared to the user configured unoccupied setpoints.

Remote OCC Input

Remote OCC input is an optional remote occupancy digital input that may also be used to determine if the operation of the unit is occupied or unoccupied.

Indoor Fan Operation

Fan speed is controlled to maintain the configured duct static pressure setpoint.

STATIC PRESSURE RESET

With airside linkage, between Carrier i-Vu terminal units, the controller can be configured for optional static pressure reset. When configured, the static pressure setpoint will be reset based on the air terminal damper position received via linkage. When the air terminal maximum damper is less than the air terminal minimum damper, the unit initiates static pressure reset by lowering the calculated static pressure setpoint.

Cooling Operation

The unit operates 2 or 4 stages of compression to maintain the desired supply air setpoint. The water side economizer (if equipped) is used as the first stage of cooling in addition to the compressors. The compressor outputs are controlled by the PID (proportional-integral-derivative) cooling loop and cooling stages capacity algorithm. The algorithm calculates the desired number of stages needed by comparing the supply air temperature to the supply air setpoint.

The following conditions must be true for the cooling algorithm to run:

- Cooling is set to Enable.
- Cooling is required (control temperature is ≥ cooling setpoint + 0.1°F)
- The Fire/Smoke Input and Shutdown modes are inactive.
- Water Flow Switch Status is True (if option is enabled).
- Condenser Water Valve End switch Status is True (if option is enabled).
- Fan Status is True (if option is enabled).
- If economizer cooling is available and active, and the economizer alone is insufficient to provide enough cooling.
- OAT > Cooling Lockout Temperature if OAT is available.
- Source Water Pump is on (if Source Water Linkage is active).

If all of the above conditions are met, the compressors' relays are energized as required. The compressors will remain energized until the control temperature is 4°F (adj) below the cooling setpoint. If cooling is active and if the SAT approaches the minimum SAT limit, the cooling capacity is reduced as not to go below the minimum limit.

The configuration screens contain the Minimum SAT parameter as well as Cooling Lockout based on outdoor air temperature (OAT). Both can be adjusted to meet various specifications.

SUPPY AIR TEMPERATURE CONTROL (WITH OPTIONAL RESET FUNCTION)

The control will maintain the desired supply air temperature setpoint whenever cooling is required. A user configurable setpoint will be provided (default 55°F). If Supply Air Reset is enabled, the reset algorithm will calculate a reset value using the differential between the cooling setpoint and the control temperature. The amount of reset (reset ratio and maximum reset limit value) is user configurable.

MODULATING HOT GAS REHEAT

The unit will modulate the HGRH valve to maintain SAT and prevent overcooling.

COMPRESSOR DELAY

There is a 5-minute off-time for the compressor, as well as a 5-minute time delay, when staging up to allow the SAT to achieve a stable temperature, before energizing a second stage of capacity. Likewise, there is a 45 second delay when staging down.

After a compressor is staged off, it may be restarted again after a normal time-guard period of 5 minutes and if the supply air temperature has increased above the minimum supply air temperature limit.

The unit provides a status input to monitor the compressor operation. The status is monitored to determine if the compressor status matches the commanded state.

Heating Operation

The unit operates a modulating hot water valve output to maintain the heating supply air temperature setpoint. The hot water heating valve is controlled by the Zone Setpoint PID, which calculates a heating percentage based upon the temperature differential between the control temp and the effective heating setpoint. The heating percentage resets the SAT setpoint between the control temperature and the heating maximum limit (max heat sat limit minus 5 degrees) to maintain control temperature.

MORNING WARM-UP

Morning Warm-Up occurs after the first transition from unoccupied to occupied operation, and if heat is required.

The following conditions must be true for the morning warm-up algorithm to operate:

- The outdoor air temperature is less than the Heating Lockout Temperature setpoint.
- Heating is required [(Control Temperature is < occupied heating setpoint –1°F (0.5°C)].

- The unit has a valid Supply Air Temperature input.
- The unit has a valid Space Temperature input.
- Neither Cool nor Economizer modes are active and the 5-minute time guard between modes has expired.

Morning warm-up is deactivated when the control temperature is greater than the effective heating setpoint.

OCCUPIED HEATING

The following conditions must be true for the occupied heating algorithm to operate:

- The Outdoor Air Temperature is less than the Heating Lockout Temperature (65°F) setpoint.
- Heating is required [(Control Temperature is < unoccupied heating setpoint –1°F (0.5 °C)].
- The unit has a valid Supply Air Temperature input.
- The unit has a valid Controlling Temperature input.
- Neither Cool nor Economizer modes are active and the 5-minute time guard between modes has expired.
- Occupied Heating must be configured to Enable to allow the controller to act as primary heating during Occupancy maintaining Space Effective Heating Setpoint as well to act as primary heating during Unoccupancy maintaining Space Effective Heating Setpoint.
- Occupied Heat Enable parameter must be set Enabled.

UNOCCUPIED HEATING

The following conditions must be true for the unoccupied heating algorithm to operate:

- The Outdoor Air Temperature is less than the Heating Lockout Temperature (65°F) setpoint.
- Heating is required (Control Temperature is < unoccupied heating setpoint –1°F (.5 °C).
- The unit has a valid Supply Air Temperature input.
- The unit has a valid Controlling Temperature input.
- Neither Cool nor Economizer modes are active and the 5-minute time guard between modes has expired.
- Unoccupied Heating must be configured to Enable.

CV AND VAV SEQUENCE OF OPERATION

The following sequences of operation apply to both the CV and VAV unit type.

Indoor Air Quality (IAQ) and Demand Control Ventilation (DCV)

If the optional hardwired indoor air quality sensor is installed, ZS CO2 (IAQ), or the System Space AQ network input point is used, the unit maintains indoor air quality with a modulating OA damper, which provides demand-controlled ventilation. The control operates the modulating OA damper during occupied periods, monitors the CO_2 level, compares it to the configured setpoints, and adjusts the ventilation rate, as required.

The control provides proportional ventilation to meet the requirements of ASHRAE specifications by providing a base ventilation rate [Vent Dmpr Pos / DCV Min Pos (default of 20%)] and then increasing the rate as the CO_2 level increases (from default low of 500 ppm). The control proportionally increases ventilation when the CO_2 level rises above the start ventilation setpoint and reaches the full ventilation rate when the CO_2 level is at or above the maximum setpoint [DCV Max Vent Damper Pos (default of 100%)]. A minimum damper position is configured to ensure that proper base ventilation is delivered when occupants are not present. Access the IAQ configurations through the Configuration screen.

The following conditions must be true in order for this algorithm to run:

- Damper Control is configured for DVC.
- The Fire/Smoke Input and Shutdown modes are inactive.
- Fan Status is True (if option is enabled).
- The unit is in an occupied mode.
- IAQ sensor reading is greater than the DVC Start CRTL Setpoint.

The control has the following 4 adjustable setpoints:

- DVC Start Ctrl Setpoint
- DVC Max Ctrl Setpoint
- Minimum Damper Pos
- DVC Max Vent Damper Pos

NOTE: In order for the damper to maintain proper base ventilation, you must configure the fan to Continuous or Always On.

2-POSITION OA DAMPER (OPTIONAL)

You can configure the control to operate as a ventilation damper in a 2-position ventilation mode to provide the minimum ventilation requirements during occupied periods.

Demand Limiting

The controller can accept 3 levels of demand limit from the BACnet network. In response to a demand limit, the unit decreases its heating setpoint and increases its cooling setpoint to widen the range, to immediately lower the electrical demand. The temperature adjustment for both heating and cooling and for each demand level can be configured. The response to a particular demand level can also be set to 0.

Compressor Status

The controller provides a status input to monitor the compressor operation. The status is monitored to determine if the compressor status matches the commanded state. This input is used to determine if a refrigerant safety switch or other safety device has tripped and caused the compressor to stop operating normally. If this occurs, an alarm is generated to indicate the faulted compressor condition. In heating mode, if auxiliary heat is available, the auxiliary heat replaces reverse cycle heating and maintains the space temperature as required.

Fan Status

The controller includes an optional fan status input. If configured, the controller compares the status of the fan to the desired commanded state. When the fan is commanded to run (ON), the fan status is checked and verified to match the commanded state. If the fan status is not on, then a fan status alarm is generated after 1 minute and the equipment's compressor(s) and auxiliary heat is disabled and the optional OA damper closes.

Condenser Water Valve End Switch

An optional input can be configured as a condenser water valve status input. If configured, the controller compares the status of the valve to the desired commanded state. When the valve is commanded to open (ON), the valve status is checked and verified to match the commanded state. If the valve status does not match after 30 seconds, then a valve status alarm is generated, and the equipment's compressor(s) are disabled.

Water Flow Proving Switch

An optional input can be configured as condenser water flow status input. If configured, the flow status must be ON for 3 seconds to enable the compressors.

Fire/Smoke Detector Input

The controller can read the status of a normally closed FSD contact input to determine if a fire or smoke detector alarm is present. If the controller determines an alarm condition is present; all heating; cooling, and the fan are disabled. The switch is configurable for normally closed or normally open.

Shutdown Input

The controller has a shutdown input (software point) which, when set to its Active mode causes the WSHP to safely shutdown in a controlled fashion. Heating and cooling are disabled after any minimum runtime conditions expire and the fan is disabled after the fan-off timer expires. All alarms are reset but any active alarm remains active. After the shutdown input transitions from Active mode to Inactive, the unit restarts after the configured power fail restart delay expires.

APPENDIX A — WIRING DIAGRAMS

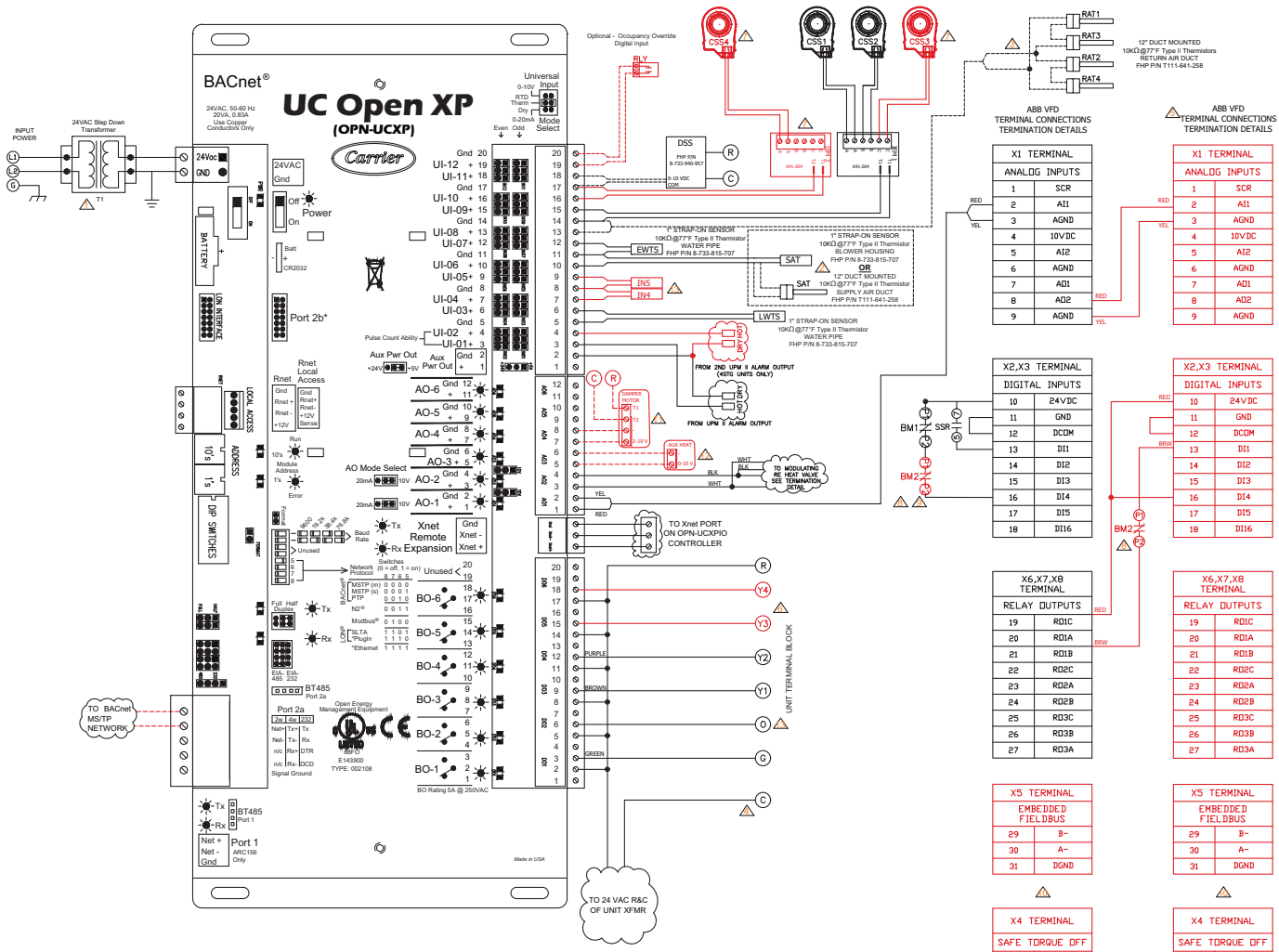

Fig. A — SCU Open Main (For use with 50BV units)

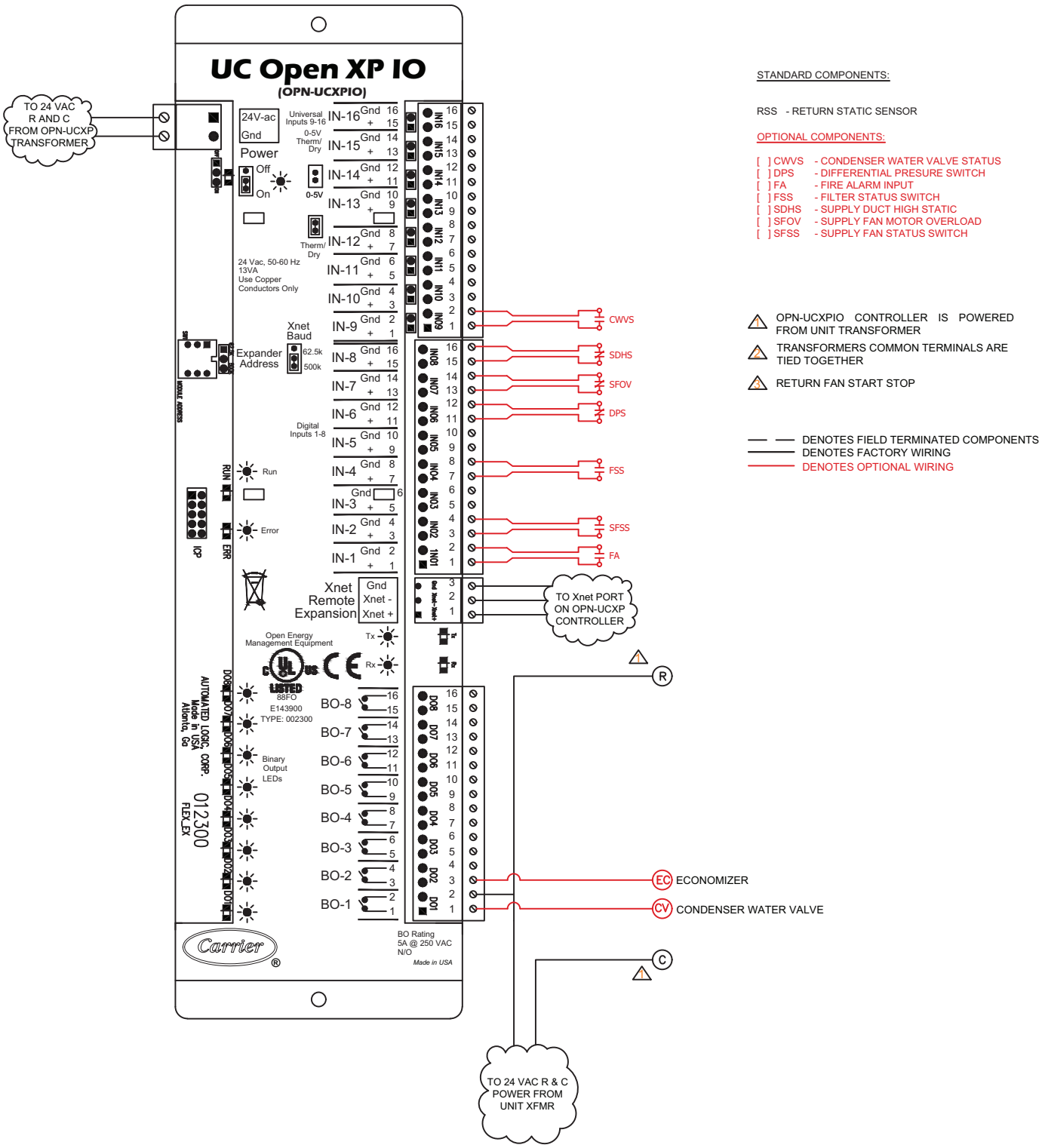

Fig. B — SCU Open Extender (For use with 50BV units)

APPENDIX B — BACNET POINTS LIST

POINT NAME	POINT ACCESS	UNITS	DEFAULT VALUE	BACnet POINT NAME	BACnet OBJECT ID
Air Source Supply Air Temp	R	°F	—	link_sat	AV:2608
Airside Linkage	R	—	—	air_linkage_fail	BV:7030
Airside Linkage	R	—	—	a_link_status	BV:2601
Auxiliary Heat Boiler Water Temp	R	°F	—	link_hwt	AV:2702
Auxiliary Heat Control Setpoint	R	°F	—	aux_heat_stpt	AV:3014
Auxiliary Heat Output	R	%	—	aux_heat_output	AV:2021
Auxilary Heat HW Pump Status	R	—	—	hw_pump	BV:2703
Auxilary Heat Test	R/W	—	Inactive (0)	aux_heat_test	BV:81004
CO_2 Sensor Failure	R	—	—	co2_fail	BV:7024
Compressor 1 Failure	R	—	—	comp1_fail	BV:7026
Compressor 1 Runtime	R	hr	—	comp1_rntm	AV:2100
Compressor 1 Runtime Alarm	R	—	—	comp1_rntm_alarm	BV:7014
Compressor 1 Service Alarm Timer	R/W	hr	500	comp1_service_hrs	AV:83106
Compressor 1 Status	R	—	—	comp1_status	BV:7152
Compressor 2 Failure	R	—	—	comp2_fail	BV:7028
Compressor 2 Runtime	R	hr	—	comp2_rntm	AV:2101
Compressor 2 Runtime Alarm	R	—	—	comp2_rntm_alarm	BV:7015
Compressor 2 Service Alarm Timer	R/W	hr	500	comp2_service_hrs	AV:83107
Compressor 2 Status	R	—	—	comp2_status	BV:7153
Compressor 3 Failure	R	—	—	comp3_fail	BV:7032
Compressor 3 Runtime	R	hr	—	comp3_rntm	AV:2102
Compressor 3 Runtime Alarm	R	—	—	comp3_rntm_alarm	BV:7016
Compressor 3 Service Alarm Timer	R/W	hr	500	comp3_service_hrs	AV:83108
Compressor 3 Status	R	—	—	comp3_status	BV:7156
Compressor 4 Failure	R	—	—	comp4_fail	BV:7033
Compressor 4 Runtime	R	hr	—	comp4_rntm	AV:2103
Compressor 4 Runtime Alarm	R	—	—	comp4_rntm_alarm	BV:7017
Compressor 4 Service Alarm Timer	R/W	hr	500	comp4_service_hrs	AV:83109
Compressor 4 Status	R	—	—	comp4_status	BV:7159
Compressor Capacity	R	%	—	comp_cap	AV:5001
Compressor Status Alarm	R	—	—	comp_alarm	BV:7013
Compressor Test	R/W	—	Inactive (0)	comp_test	BV:81002
Cond. Water Temperature	R	—	—	cwt_alarm	BV:7027
Condenser Valve Failure	R	—	—	cwv_fail	BV:7025
Control Temp Sensor Failure	R	—	—	ctrl_temp_fail	BV:7067
Controlling Temperature	R	°F	—	ctrl_temp	AV:2035
Cool Enable	R/W	—	Active (1)	cl_enable	BV:1011
Cooling Lockout Temperature	R/W	°F	45	oat_cl_lockout	AV:9002
Current Static Pressure Setpoint	R	in H_2O	—	sa_static_stpt_value	AV:3031
CW Differential Pressure Switch	R/W	—	Inactive (0)	cw_dp_enable	BV:99009
CW Flow Switch	R	—	—	dp_switch	BV:7089
CW Valve Status	R	—	—	cw_status	BV:7090
Damper Output	R	%	—	oa_dpr_pos	AV:2022
Dehumidification	R	—	—	dehum	BV:2006
Economizer Test	R/W	—	Inactive (0)	econ_test	BV:81005
Effective Cool Setpoint	R	°F	—	eff_cl_stpt	AV:3005
Effective Heat Setpoint	R	°F	—	eff_ht_stpt	AV:3006
Effective Supply Air Temp Setpoint	R	°F	—	eff_sat_setpt_value	AV:2033
Factory Test	R/W	—	Inactive (0)	fac_test_enable	BV:91000
Fan Off Delay	R/W	seconds	90	fan_delay_off	AV:9024
Fan On Delay	R/W	seconds	10	fan_delay_on	AV:9025
Fan Test	R/W	—	Inactive (0)	fan_test	BV:81001
Filter	R	—	—	filter_alarm	BV:7019
Filter Runtime	R	hr	—	filter_rntm	AV:2015
Filter Service Alarm Timer	R/W	hr	600	filter_service_hrs	AV:2019
Filter Status Input	R	—	—	filter_status	BV:1005
Fire / Smoke Shutdown	R	—	—	fire_alarm	BV:7007
Hardwired Humidity Sensor	R/W	—	Inactive (0)	rh_enable	BV:99002
Heat Enable	R/W	—	Active (1)	ht_enable	BV:1012
Heating Lockout Temperature	R/W	°F	65	oat_ht_lockout	AV:9003
HGRH Output	R	%	—	hgrh_output	AV:2026
HGRH Test	R/W	—	Inactive (0)	dehum_test	BV:81003

APPENDIX B — BACNET POINTS LIST (CONT)

POINT NAME	POINT ACCESS	UNITS	DEFAULT VALUE	BACnet POINT NAME	BACnet OBJECT ID
Hi Static Pressure Shutdown	R	—	—	sp_hi_alarm	BV:7060
High Space Temperature	R	—	—	spt_hi_alarm	BV:7011
Hot Gas Reheat	R/W	—	Active (1)	hgrh_enable	BV:99004
Hot Water Coil	R/W	—	Inactive (0)	reheat_type	BV:91010
Indoor Air Quality	R	—	—	iaq_alarm	BV:7005
Indoor Air Quality CO_2	R	ppm	—	iaq	AV:1009
Leaving Cond. Water Temp	R	°F	—	cwl_temp	AV:1017
Loop Pump Request	R	—	—	loop_request	AV:2024
Loop Pump Status	R	—	—	loop_pump	BV:2702
Low Space Temperature	R	—	—	spt_lo_alarm	BV:7012
Low Static Pressure Shutdown	R	—	—	sp_low_alarm	BV:7062
Maximum VFD Output	R/W	%	100	max_vfd_spd	AV:3026
Maximum Heating SAT	R/W	°F	120	sat_ht_max	AV:83004
Minimum VFD Output	R/W	%	25	min_vfd_spd	AV:3027
Minimum Cooling SAT	R/W	°F	45	sat_cl_min	AV:83003
Occupancy Status	R	—	—	occ_status	BV:2008
Occupied Heating	R/W	—	Inactive (0)	occ_heat	BV:2031
Occupied Override Delay	R/W	min	15	occ_ovr_delay	AV:9028
Occupied Relative Humidity Setpoint	R/W	%rh	60	occ_dehum_stpt	AV:3011
Open Vent Damper 100%	R/W	—	Inactive (0)	dpr_open	BV:81007
Optimal Start	R/W	hr	1	optm_start	AV:9026
Outdoor Air Temp. Sensor Failure	R	—	—	oat_fail	BV:7029
Outdoor Air Temperature	R	°F	—	oa_temp	AV:1003
Overload Shutdown	R	—	—	ovrld_alarm	BV:7006
Override Time Remaining	R	min	—	ovrde_time	AV:2016
Power Fail Restart Delay	R/W	seconds	10	start_delay	AV:9007
Preload OA Damper Position	R/W	—	Inactive (0)	dpr_preload	BV:81006
Reset Comp 1 Runtime Alarm	R/W	—	Inactive (0)	comp1_rntm_clr	BV:7514
Reset Comp 2 Runtime Alarm	R/W	—	Inactive (0)	comp2_rntm_clr	BV:7515
Reset Comp 3 Runtime Alarm	R/W	—	Inactive (0)	comp3_rntm_clr	BV:7516
Reset Comp 4 Runtime Alarm	R/W	—	Inactive (0)	comp4_rntm_clr	BV:7517
Reset Low Static Shutdown	R/W	—	Inactive (0)	lsl_reset	BV:1908
Reset Maximum Limit	R/W	°^F	10	sat_cl_stpt_reset_max	AV:9040
Reset Ratio	R/W	—	3	sat_cl_stpt_reset	AV:9041
Reset Runtime Filter Alarm	R/W	—	Inactive (0)	filter_rntm_clr	BV:7518
Return Air Temp Sensor Failure	R	—	—	loc_rat_sensor_fail	BV:7021
Return Air Temperature	R	°F	—	ra_temp	AV:1010
Return Air Temperature	R	—	—	rat_alarm	BV:7035
Reversing Valve	R/W	—	Inactive (0)	rev_vlv	BV:99005
Setpoint	R/W	°F	—	occ_cl_stpt	AV:3001
Setpoint	R/W	°F	—	occ_ht_stpt	AV:3002
Setpoint	R/W	°F	—	unocc_cl_stpt	AV:3003
Setpoint	R/W	°F	—	unocc_ht_stpt	AV:3004
Setpoint Adjustment	R	°^F	—	stpt_adj	AV:1006
Setpoint Adjustment	R/W	—	Active (1)	stpt_adj_enable	BV:1013
Setpoint Adjustment Range	R/W	°^F	5	stpt_adj_range	AV:9015
Service Test	R/W	—	Inactive (0)	test_enable	BV:81000
Shutdown	R/W	—	Inactive (0)	shutdown	BV:9001
Smoke Detector Input	R	—	—	smk_detect	BV:1004
Source Water Linkage	R	—	—	cw_link_status	BV:2701
Source Water Linkage	R	—	—	cond_water_linkage_fail	BV:7031
SP Low Limit Trip Setpoint (Shutdown)	R/W	in H_2O	0.1	lo_sp_limit	AV:69
Space Relative Humidity	R	%rh	—	space_rh	AV:1011
Space Relative Humidity	R	—	—	sprh_hi_alarm	BV:7018
Space Temperature	R	°F	—	space_temp	AV:2007
Static Pressure	R	in H_2O	—	static_press	AV:2028
Static Pressure Sensor Failure	R	—	—	sp_fail	BV:7061
Static Pressure Setpoint	R/W	in H_2O	0.5	sa_static_stpt	AV:3030
Supply Air Setpoint	R/W	°F	55	sat_cl_stpt	AV:3029
Supply Air Temp Reset	R/W	—	Inactive (0)	sa_reset_en	BV:9004
Supply Air Temp. Sensor Failure	R	—	—	sat_sensor_fail	BV:7020
Supply Air Temperature	R	°F	—	sa_temp	AV:1008

APPENDIX B — BACNET POINTS LIST (CONT)

POINT NAME	POINT ACCESS	UNITS	DEFAULT VALUE	BACnet POINT NAME	BACnet OBJECT ID
Supply Air Temperature	R	—	—	sat_alarm	BV:7004
Supply Fan Failure	R	—	—	sfan_fail_alarm	BV:7008
Supply Fan Status	R	—	—	sfan_status	BV:1003
Supply Fan VFD Output	R	%	—	vfd_output	AV:2027
System Cooling Demand Level	R	—	—	cool_demand_level	AV:9006
System Heating Demand Level	R	—	—	heat_demand_level	AV:9036
System Outdoor Air Temperature	R/W	°F	-999	system_oat	AV:1901
System Return Air Temperature	R/W	°F	-999	system_rat	AV:1920
System Setpoint Adjustment	R/W	°F	-999	system_stpt_adj	AV:1913
System Space IAQ	R/W	ppm	-999	system_iaq	AV:1903
System Space RH	R/W	%	-999	system_rh	AV:1904
System Space Temperature	R/W	°F	-999	system_spt	AV:1902
System Supply Air Temperature	R/W	°F	-999	system_sat	AV:1906
Test AO-1	R/W	%	0	ao_one	AV:92001
Test AO-2	R/W	%	0	ao_two	AV:92002
Test AO-3	R/W	%	0	ao_three	AV:92003
Test DO-1	R/W	—	Inactive (0)	do_one	BV:91001
Test DO-2	R/W	—	Inactive (0)	do_two	BV:91002
Test DO-3	R/W	—	Inactive (0)	do_three	BV:91003
Test DO-4	R/W	—	Inactive (0)	do_four	BV:91004
Test DO-5	R/W	—	Inactive (0)	do_five	BV:91005
Test DO-6	R/W	—	Inactive (0)	do_six	BV:91006
Test Expander 1 AO-3	R/W	%	0	ao_one_three	AV:92004
Test Expander 1 DO-1	R/W	—	Inactive (0)	do_one_one	BV:91007
Test Expander 1 DO-2	R/W	—	Inactive (0)	do_one_two	BV:91008
Unit Protection Module 1 Alarm	R	—	—	upm1_alm	BV:7022
Unit Protection Module 2 Alarm	R	—	—	upm2_alm	BV:7023
Unit Type	R/W	—	Active (1)	unit_type	BV:99001
Unoccupied Relative Humidity Setpoint	R/W	%rh	95	unocc_dehum_stpt	AV:3012
Vent Damper Pos / DCV Min Pos	R/W	%	20	econ_min	AV:4005
Water Economizer Control Setpoint	R	°F	—	h2o_econ_ctrl_stpt	AV:3015
Water Economizer Output	R	%	—	h2o_econ_output	AV:2023
Water Loop Temp	R	°F	—	link_cwt	AV:2701
ZS Sensor Configuration	R	—	—	zs_config_fail	BV:7055
ZS Temperature Sensor Failure	R	—	—	zst_sensor_fail	BV:7051

POINT NAME	POINT ACCESS	UNITS	DEFAULT VALUE	BACnet POINT NAME	BACnet OBJECT ID
Air Source Mode	R	—	1 = OFF 2 = WARMUP 3 = HEAT 4 = COOLING 5 = FREECOOL 6 = PRESSURE 7 = EVAC 8 = VENT	link_ahu_mode	MSV:2005
BAS On / Off	R/W	—	(1 = Inactive) 2 = Occupied 3 = Unoccupied	keypad_ovrde	MSV:1001
Control Temp Source	R	—	1 = Sensor Failure 2 = Space 3 = Return Air 4 = Linkage Zone 5 = Locked Value	ctrl_temp_src	MSV:2013
Entering Air Water Economizer	R/W	—	(1 = None) 2 = 2-Pos	h2o_econ_type	MSV:91001
Optimal Start Type	R/W	—	(1 = None) 2 = Temp Compensated 3 = Learning Adaptive	start_type	MSV:2009
SP Reset Demand Level	R/W	—	(1 = Not Active) 2 = Cool Dmd Lvl 1 3 = Cool Dmd Lvl 2 4 = Cool Dmd Lvl 3	sp_reset_dmd_lvl	MSV:9033
Supply Fan Speed	R	—	1 = Off 2 = Low 3 = Medium 4 = High 5 = On	fan_run	MSV:2004
System Mode	R	—	1 = OFF 2 = Fan Only 3 = Economize 4 = Cooling 5 = Heating 6 = Cont Fan 7 = Test 8 = Start Delay 9 = Dehumidify 10 = Fire Shutdown 11 = Shutdown 12 = IAQ Override	run_status	MSV:2002
Ventilation Damper Type	R/W	—	(1 = None) 2 = 2-Pos 3 = DCV	dpr_type	MSV:91002

APPENDIX C — EQUIPMENT TOUCH NAVIGATION AND WIZARD

IMPORTANT: Engineering units shown in this document in the defaults and ranges are strictly for reference. You must enter an integer only.

Table A — Navigation Screens

SCREEN NAME	DISPLAY	DETAILS
STANDBY	 Not an interactive screen, Touch anywhere to advance to **Home** screen.	Screen displays after the Inactivity Timer expires (default is 5 minutes). Displays: • Space temperature • Current setpoints • Mode: Cooling, Heating, Fan Speed, Economizer • Occupancy
HOME	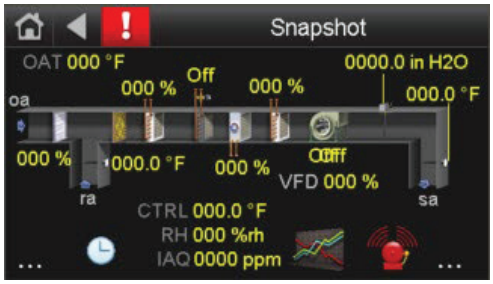 Click **[...]** on the right to navigate to **Snapshot** screen.	Displays: • Space temperature • Current setpoints • Mode: Cooling, Heating, Fan Speed, Economizer • Occupancy Features: • Pushbutton Override • Space Setpoint Offset Adjustment
SNAPSHOT	 Forward to **50BV Properties Menu** screen -click **[...]** on the right Displays: • SAT, if allowed • RH, if available and allowed • IAQ, if available and allowed • OAT, if available and allowed • Coil and Dampers' positions and % open 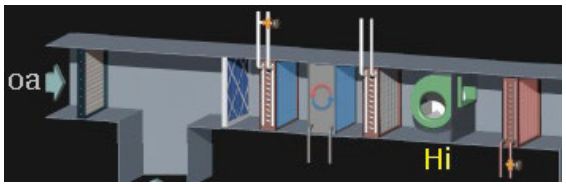	Navigates to: • Alarm Status • Schedules • Trends • Back to the **Home** screen- click **[...]** on the left Displays: • 50BV alarms, if present • Fan Speed • Filter Status

Table A — Navigation Screens (cont)

SCREEN NAME	DISPLAY	DETAILS
FAN AND MODE CONTROL	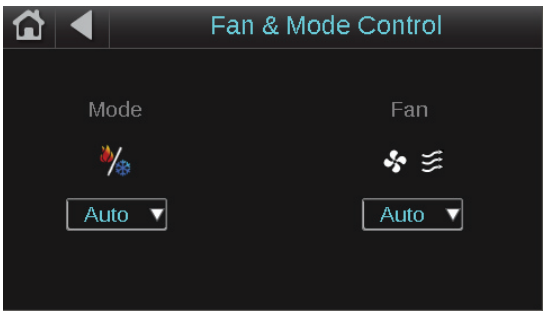	Manually set Modes and Fan Speed. Displays: • Fan Mode • Fan Speed • Cool Mode • Heat Mode
PROPERTIES	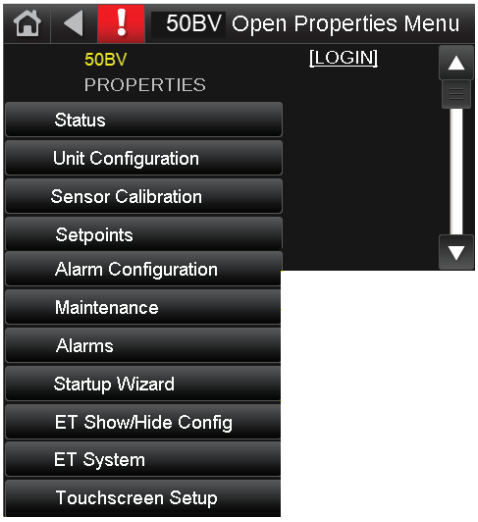	Navigates to **Property** pages. Login with one of the following passwords: • User level→ type **user** • Admin level→type **admin** • Factory level→ type **Touch** NOTE: Only the buttons that are authorized for a specific password level are visible.
SHOW/HIDE CONFIGURATION	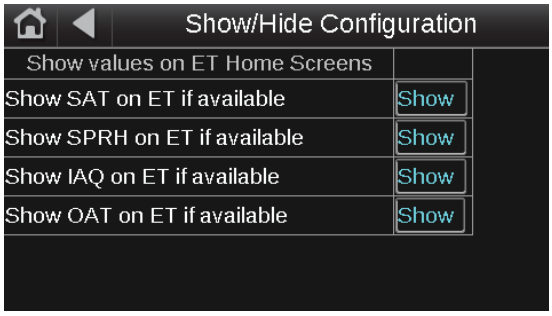	Configure Show/Hide conditions for values on the following screens: Set up Source Water Linkage using the following properties: • Collector Network number. • Address Type: (IP Address/ MAC) • MSTP Address of Collector. • IP Address of Collector (to set an IP address, the MSTP address must be set to “0”). NOTE: Only displayed for the Factory or Admin password. (See above.)
SOURCE WATER LINKAGE	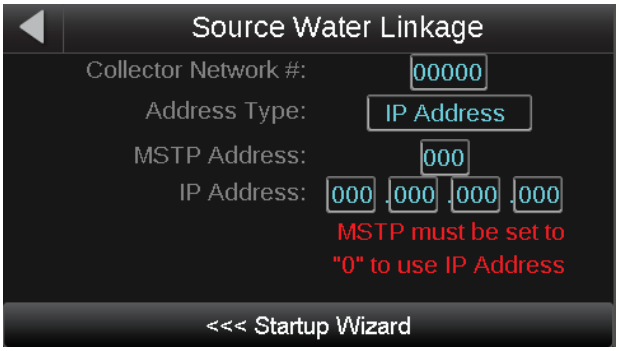	Set up Source Water Linkage using the following properties: • Collector Network number. • Address Type: (IP Address/ MAC) • MSTP Address of Collector. • IP Address of Collector (to set an IP address, the MSTP address must be set to “0”).

Table B — Startup Wizard Configuration

POINT NAME/DESCRIPTION	DEFAULT	RANGE
EQUIPMENT TOUCH START UP WIZARD		
Unit Type: The type of unit installed.	CV	CV, VAV
CV SF Low Speed Setting: The low fan speed setting in CV mode.	50%	0-100%
CV SF Med Speed Setting: The medium fan speed setting in CV mode.	66%	0-100%
CV SF High Speed Setting: The high fan speed setting in CV mode.	100%	0-100%
Min. VFD Output: The minimum allowed fan speed.	25%	0-100%
Max. VFD Output: The maximum allowed fan speed.	100%	0-100%
Enable SF Status Function: Allows the supply fan status to be used.	No	No, Yes
Enable CW Valve Status Function: Allows the CW valve status to be used.	No	No, Yes
CW DP Switch: Allows the CW DP switch to be used, if installed.	None	None, Installed
Reversing Valve: Allows the reversing valve to be used, if installed.	Installed	Installed, None
Auxiliary Heat Type: Allows the auxiliary heat to be used, if installed.	Installed	Installed, None – Cooling Only
Hot Gas Reheat: Allows the hot gas reheat to be used, if installed.	Modulating	Modulating, None
Entering Air H_2O Economizer: The water side economizer type.	None	None, 2-Pos
Vent Damper Type: The ventilation damper control being used.	None	None, 2-Pos, DCV
Hardwired Humidity Sensor: Set to **Installed** if a humidity sensor is present.	None	None, Installed
Compression Stages: The number of stages of compression.	Two Stages	Two Stages, Four Stages

Source Water Linkage

Use this screen to set up Source Water Linkage using the following properties in Fig. C and Table C). To navigate to **Startup Wizard**, click on the bottom.

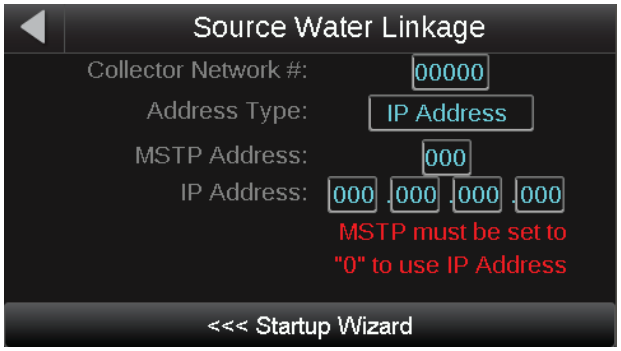

Set up Source Water Linkage using the following properties:

- Collector Network number.
- Address Type: (IP Address/MAC)
- MSTP Address of Collector.
- IP Address of Collector (to set an IP address, the MSTP address must be set to “0”).

Fig. C — Source Water Linkage Startup Wizard

Table C — Source Water Linkage

POINT NAME/DESCRIPTION	DEFAULT	RANGE
EQUIPMENT TOUCH START UP WIZARD		
SOURCE WATER LINKAGE		
Collector Network Number: Enter the source water controller’s MSTP network number.	0	0 to 65,534
Address Type: Select the type of BACnet network of the source water controller.	MSTP	MSTP or IP Address
MSTP Address: Set the MAC address of the source water controller. NOTE**:** The MSTP address and IP address are mutually exclusive. To set an IP address, the MSTP address must be 0.	0	0 to 99
IP Address: Set the MAC address of the source water controller. NOTE**:** The MSTP address and IP address are mutually exclusive. To set an IP address, the MSTP address must be 0.	0.0.0.0	0.0.0.0 to 255.255.255.255

© 2023 Carrier