Carrier
United Technologies

Aquazone™ 50PSW025-420 Water-to-Water Source Heat Pump with Puron® Refrigerant (R-410A)

Installation, Start-Up, and Service Instructions

CONTENTS

Page

SAFETY CONSIDERATIONS 1
GENERAL 2
INSTALLATION 2
Step 1 — Check Jobsite 2
Step 2 — Check Unit 2
- STORAGE
- PROTECTION
- INSPECT UNIT

Step 3 — Locate Unit 7
Step 4 — Mount Unit 7
Step 5 — Connect Piping 8
- WATER SUPPLY AND QUALITY
- COOLING TOWER/BOILER APPLICATION
- WELL WATER SYSTEMS
- EARTH COUPLED GEOTHERMAL SYSTEMS

Step 6 — Wire Electrical Connections 13
PRE-START-UP 18
System Checkout 18
FIELD SELECTABLE INPUTS 18
Safety Devices and the Complete C Controller . . 18
START-UP 21
Operating Limits 21
Unit Start-Up 21
Scroll Compressor Rotation 21
Cleaning and Flushing 21
Antifreeze 22
Cooling Tower/Boiler Systems 22
Ground Coupled, Closed Loop and Plateframe Heat Exchanger Well Systems 22
OPERATION 22
Power Up Mode 22
Units with Aquazone Complete C Control 22
Off Mode 22
Heating Mode 23
Cooling Mode 23
Retry Mode 23
SERVICE 23
Water Coil 23
Refrigerant System 23
Condenser Cleaning 24
Checking System Charge 24
Refrigerant Charging 24
TROUBLESHOOTING 24
50PSW START-UP CHECKLIST CL-1

IMPORTANT: Read the entire instruction manual before starting installation.

SAFETY CONSIDERATIONS

Installation and servicing of air-conditioning equipment can be hazardous due to system pressure and electrical components. Only trained and qualified service personnel should install, repair, or service air-conditioning equipment.

Untrained personnel can perform basic maintenance function of cleaning coils. All other operations should be performed by trained service personnel. When working on air-conditioning equipment, observe precautions in the literature, tags and labels attached to the unit, and other safety precautions that may apply.

Improper installation, adjustment, alteration, service, maintenance, or use can cause explosion, fire, electrical shock or other conditions which may cause personal injury or property damage. Consult a qualified installer, service agency, or your distributor or branch for information or assistance. The qualified installer or agency must use factory-authorized kits or accessories when modifying this product. Refer to the individual instructions packaged with the kits or accessories when installing.

Follow all safety codes. Wear safety glasses and work gloves. Use quenching cloth for brazing operations. Have fire extinguisher available. Read these instructions thoroughly and follow all warnings or cautions attached to the unit. Consult local building codes and the National Electrical Code (NEC) for special installation requirements.

Understand the signal words — DANGER, WARNING, and CAUTION. DANGER identifies the most serious hazards which will result in severe personal injury or death. WARNING signifies hazards that could result in personal injury or death. CAUTION is used to identify unsafe practices, which would result in minor personal injury or product and property damage.

Recognize safety information. This is the safety alert symbol (⚠). When you see this symbol on the unit and in instructions or manuals, be alert to the potential for personal injury.

⚠WARNING

Electrical shock can cause personal injury or death. Before installing or servicing system, always turn off main power to system. There may be more than one disconnect switch. Turn off accessory heater power if applicable. Install lockout tag.

Manufacturer reserves the right to discontinue, or change at any time, specifications or designs without notice and without incurring obligations.

⚠ WARNING

DO NOT USE TORCH to remove any component. System contains oil and refrigerant under pressure.

To remove a component, wear protective gloves and goggles and proceed as follows:

a. Shut off electrical power to unit.
b. Recover refrigerant to relieve all pressure from system using both high-pressure and low pressure ports.
c. Traces of vapor should be displaced with nitrogen and the work area should be well ventilated. Refrigerant in contact with an open flame produces toxic gases.
d. Cut component connection tubing with tubing cutter and remove component from unit. Use a pan to catch any oil that may come out of the lines and as a gage for how much oil to add to the system.
e. Carefully unsweat remaining tubing stubs when necessary. Oil can ignite when exposed to torch flame.

Failure to follow these procedures may result in personal injury or death.

⚠ CAUTION

DO NOT re-use compressor oil or any oil that has been exposed to the atmosphere. Dispose of oil per local codes and regulations. DO NOT leave refrigerant system open to air any longer than the actual time required to service the equipment. Seal circuits being serviced and charge with dry nitrogen to prevent oil contamination when timely repairs cannot be completed. Failure to follow these procedures may result in damage to equipment.

GENERAL

The Aquazone™ 50PSW water source heat pump (WSHP) is a single-package vertically mounted unit with electronic controls designed for year-round cooling and heating.

IMPORTANT: The installation of water source heat pump units and all associated components, parts, and accessories which make up the installation shall be in accordance with the regulations of ALL authorities having jurisdiction and MUST conform to all applicable codes. It is the responsibility of the installing contractor to determine and comply with ALL applicable codes and regulations.

INSTALLATION

Step 1 — Check Jobsite — Installation, operation and maintenance instructions are provided with each unit. Before unit start-up, read all manuals and become familiar with the unit and its operation. Thoroughly check out the system before operation. Complete the inspections and instructions listed below to prepare a unit for installation. See Tables 1 and 2 for unit physical data.

Units are designed for indoor installation only. Be sure to allow adequate space around the unit for servicing. See Fig. 1-4 for overall unit dimensions.

These units are not approved for outdoor installation and must be installed indoors in the structure being conditioned. Do not locate in areas where ambient conditions are not maintained within 40 to 100 F.

⚠ CAUTION

To avoid equipment damage, do not use these units as a source of heating or cooling during the construction process. The mechanical components used in these units can quickly become clogged with construction dirt and debris which may cause system damage.

Step 2 — Check Unit — Upon receipt of shipment at the jobsite, carefully check the shipment against the bill of lading. Make sure all units have been received. Inspect the carton or crating of each unit, and inspect each unit for damage. Ensure the shipping company makes proper notation of any shortages or damage on all copies of the freight bill. Concealed damage not discovered during unloading must be reported to the shipping company within 15 days of receipt of shipment.

NOTE: It is the responsibility of the purchaser to file all necessary claims with the shipping company.

1. Verify unit is correct model for entering water temperature of job.
2. Be sure the location chosen for unit installation provides ambient temperatures maintained above freezing. Well water applications are especially susceptible to freezing.
3. Be sure the installation location is isolated from sleeping areas, private offices and other acoustically sensitive spaces.

   NOTE: A sound control accessory package may be used to help eliminate sound in sensitive spaces.
4. Provide sufficient access to allow maintenance and servicing of the compressor and coils.
5. Provide an unobstructed path to the unit within the closet or mechanical room. Space should be sufficient to allow removal of unit if necessary.
6. Provide ready access to water valves and fittings, and screwdriver access to unit side panels.
7. Where access to side panels is limited, pre-removal of the control box side mounting screws may be necessary for future servicing.

STORAGE — If the equipment is not needed for immediate installation upon its arrival at the jobsite, it should be left in its shipping carton and stored in a clean, dry area of the building or in a warehouse. Units must be stored in an upright position at all times. If carton stacking is necessary, stack units a maximum of 3 cartons high. Do not remove any equipment from its shipping package until it is needed for installation.

Table 1 — 50PSW 025-071 Unit Physical Data

50PSW UNIT SIZE	025	035	049	061	071
Compressor Type	Scroll	Scroll	Scroll	Scroll	Scroll
Quantity	1	1	1	1	1
Maximum Water Working Pressure (psig/kPa)	400/3100	400/3100	400/3100	400/3100	400/3100
Water Connection Size (in.)					
FPT	3/4	3/4	1	1	1
Refrigeration Charge (oz/ckt)	48	59	62	72	90
Operating Weight (lb)	240	250	280	310	430
Shipping Weight (lb)	260	270	300	330	450

Table 2 — 50PSW 122-420 Unit Physical Data

50PSW UNIT SIZE	122	180	210	240	360	420
Compressor Type	Scroll	Scroll	Scroll	Scroll	Scroll	Scroll
Quantity	2	1	1	2	2	2
Maximum Water Working Pressure (psig/kPa)	400/3100	400/3100	400/3100	400/3100	400/3100	400/3100
Water Connection Size (in.)						
FPT	1 1/4	1 1/2	1 1/2	2	2	2
Refrigeration Charge (oz/ckt)	85	210	220	140	210	220
Operating Weight (lb)	720	850	890	1230	1550	1700
Shipping Weight (lb)	740	870	910	1260	1580	1730

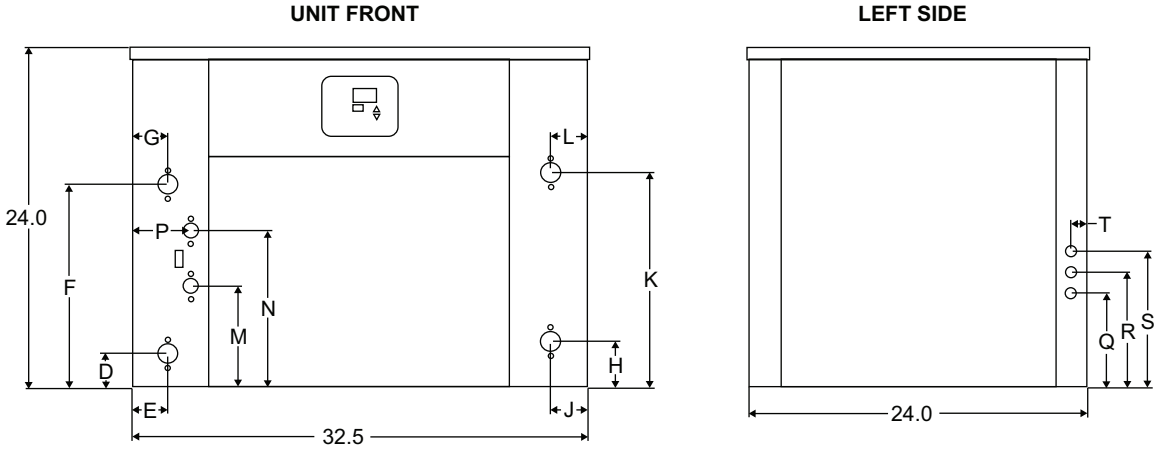

UNIT SIZE	DIMENSIONS (INCHES)															FIELD CONN.*	HRP CONN.
	D	E	F	G	H	J	K	L	M	N	P	Q	R	S	T		
025	2.70	2.50	13.70	2.50	3.25	1.95	14.25	1.95	7.15	11.00	4.25	6.55	8.05	9.55	1.25	3/4	1/2
035	2.30	2.30	14.30	2.50	3.70	2.55	15.70	2.55	7.15	11.00	4.25	6.55	8.05	9.55	1.25	3/4	1/2
049	2.30	2.60	14.30	2.65	3.70	2.65	15.70	2.65	7.15	11.00	4.25	6.55	8.05	9.55	1.25	1	1/2
061	2.30	2.60	14.30	2.65	3.20	2.65	15.20	2.65	7.15	11.00	4.25	6.55	8.05	9.55	1.25	1	1/2
071	2.50	2.60	21.75	4.45	2.50	2.45	21.75	2.65	7.15	11.00	4.25	6.55	8.05	9.55	1.25	1	1/2

LEGEND

HRP — Heat Recovery Package

*Refers to both load and source fluid connections.
NOTES:All dimensions are within ± 0.125 in. Specifications subject to change without notice.

Fig. 1 — 50PSW025-071 Unit

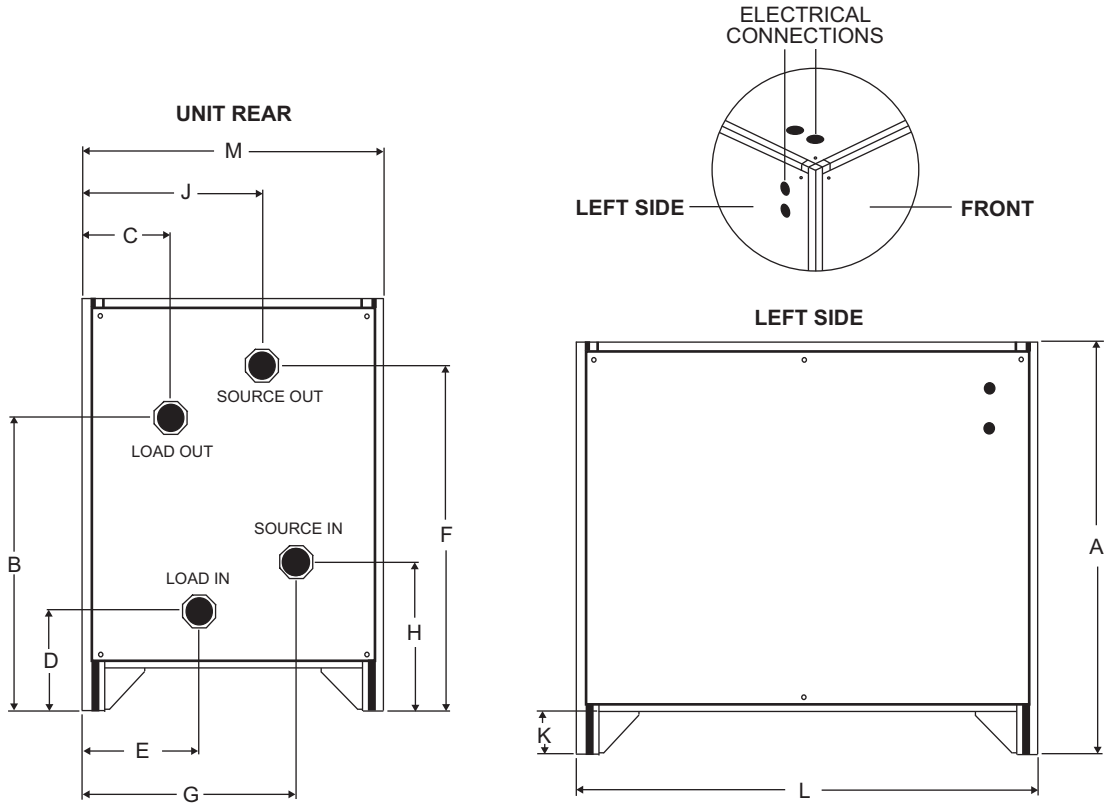

UNIT SIZE	DIMENSIONS (INCHES)												WATER CONN. (FPT)
	A	B	C	D	E	F	G	H	J	K	L	M	
122	37.50	27.62	7.00	8.38	9.25	33.50	20.75	13.50	17.50	3.50	46.00	28.00	$1^1/_4$
180	37.50	19.75	4.50	8.38	9.25	33.50	24.00	13.50	17.50	3.50	46.00	28.00	$1^1/_2$
210	37.50	19.75	4.50	8.38	9.25	33.50	23.50	13.50	17.50	3.50	46.00	28.00	$1^1/_2$

Fig. 2 — 50PSW122-210 Unit

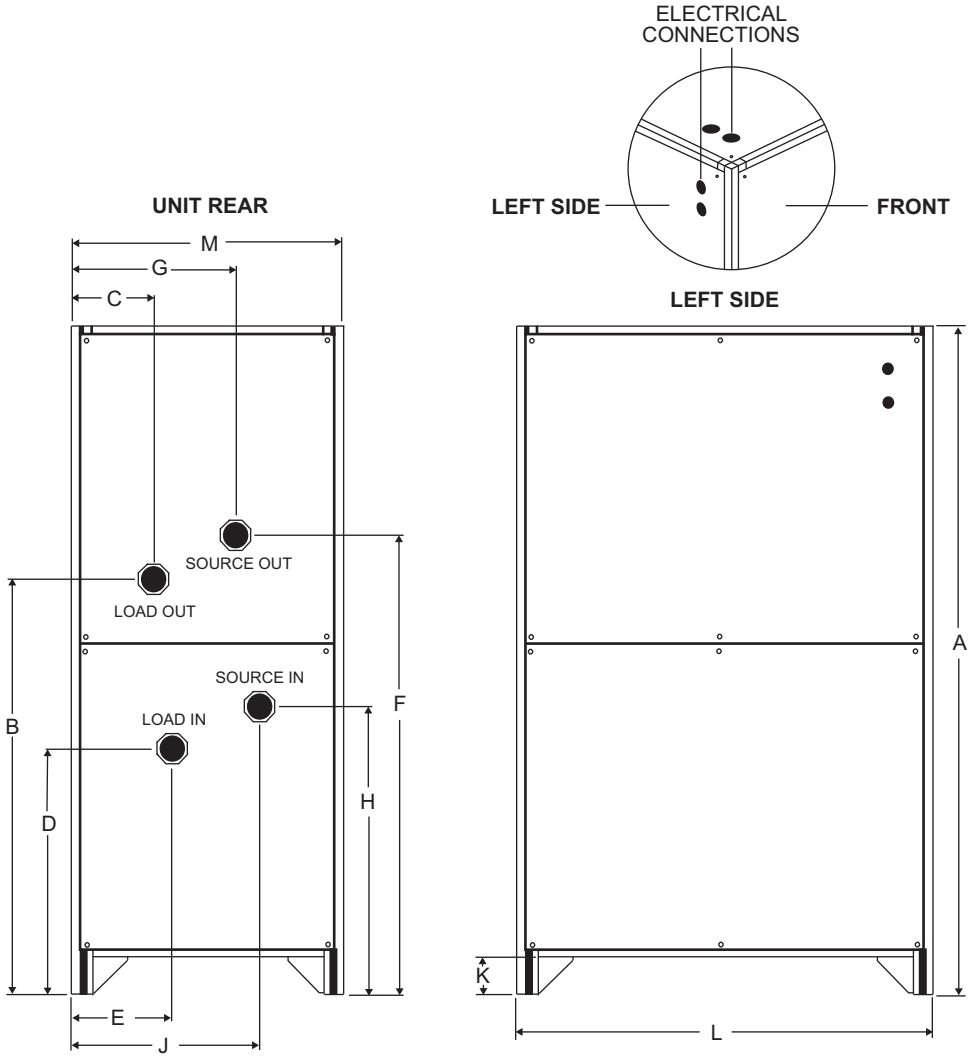

UNIT SIZE	DIMENSIONS (INCHES)												WATER CONN. (FPT)
	A	B	C	D	E	F	G	H	J	K	L	M	
240	70.00	44.00	8.50	24.50	10.50	49.00	17.50	30.00	20.50	3.50	46.00	28.00	2
360	70.00	44.00	4.50	24.50	10.50	49.00	17.50	30.00	23.50	3.50	46.00	28.00	2
420	70.00	44.00	4.50	24.50	10.50	49.00	17.50	30.00	23.50	3.50	46.00	28.00	2

Fig. 3 — 50PSW240-420 Unit

Sizes 025 thru 071

(Top View)

No access panels are located on this side.

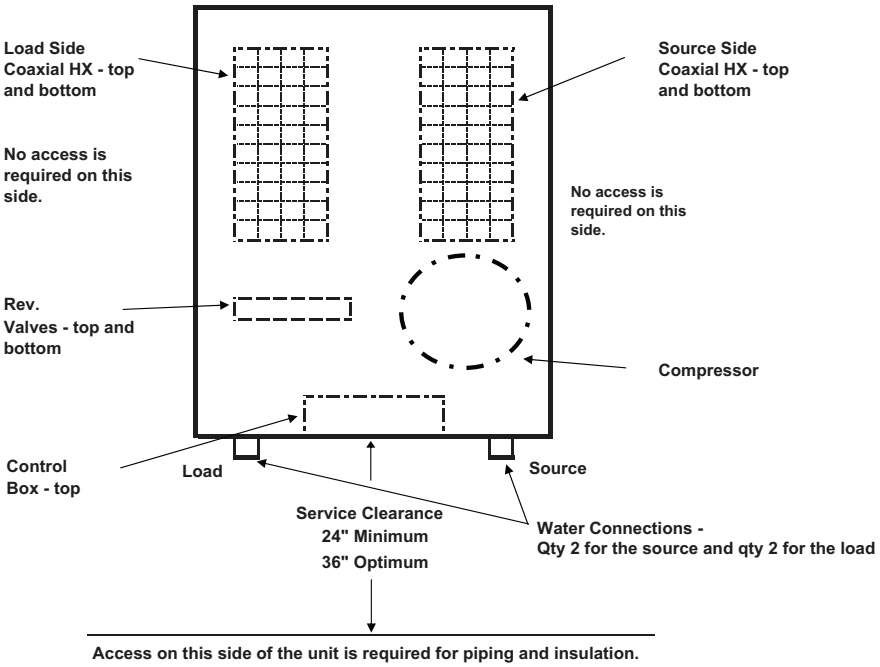

Sizes 122 thru 210

(Top View)

Access on this side of the unit is required for piping and insulation.
No access panels are located on this side.

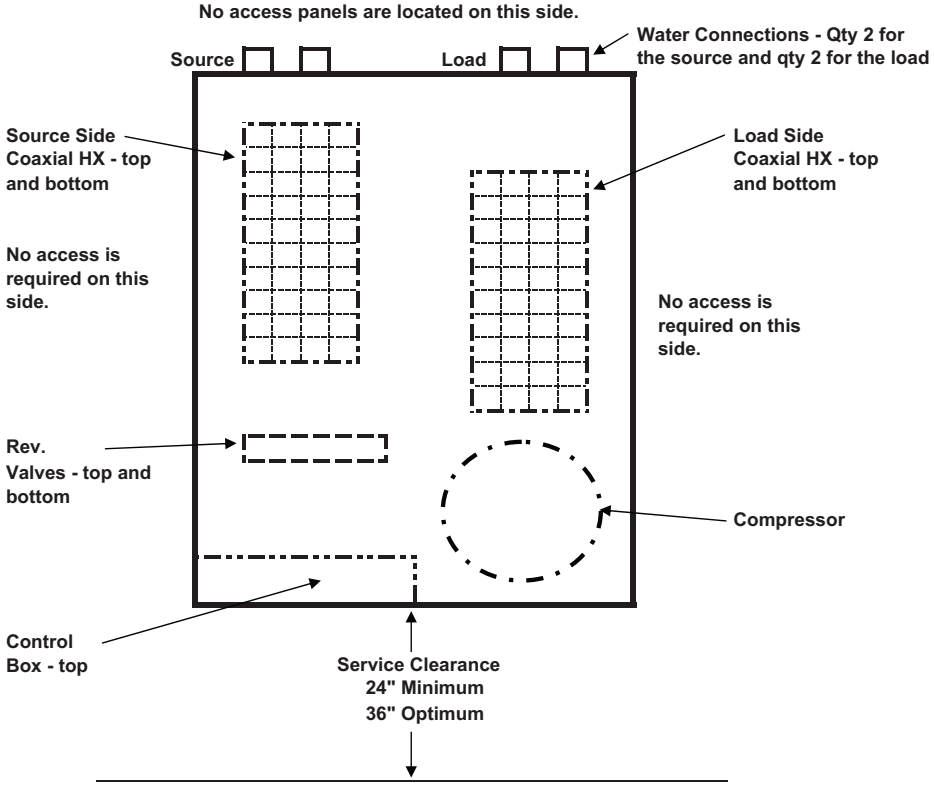

→ **Fig. 4 — Service Clearances**

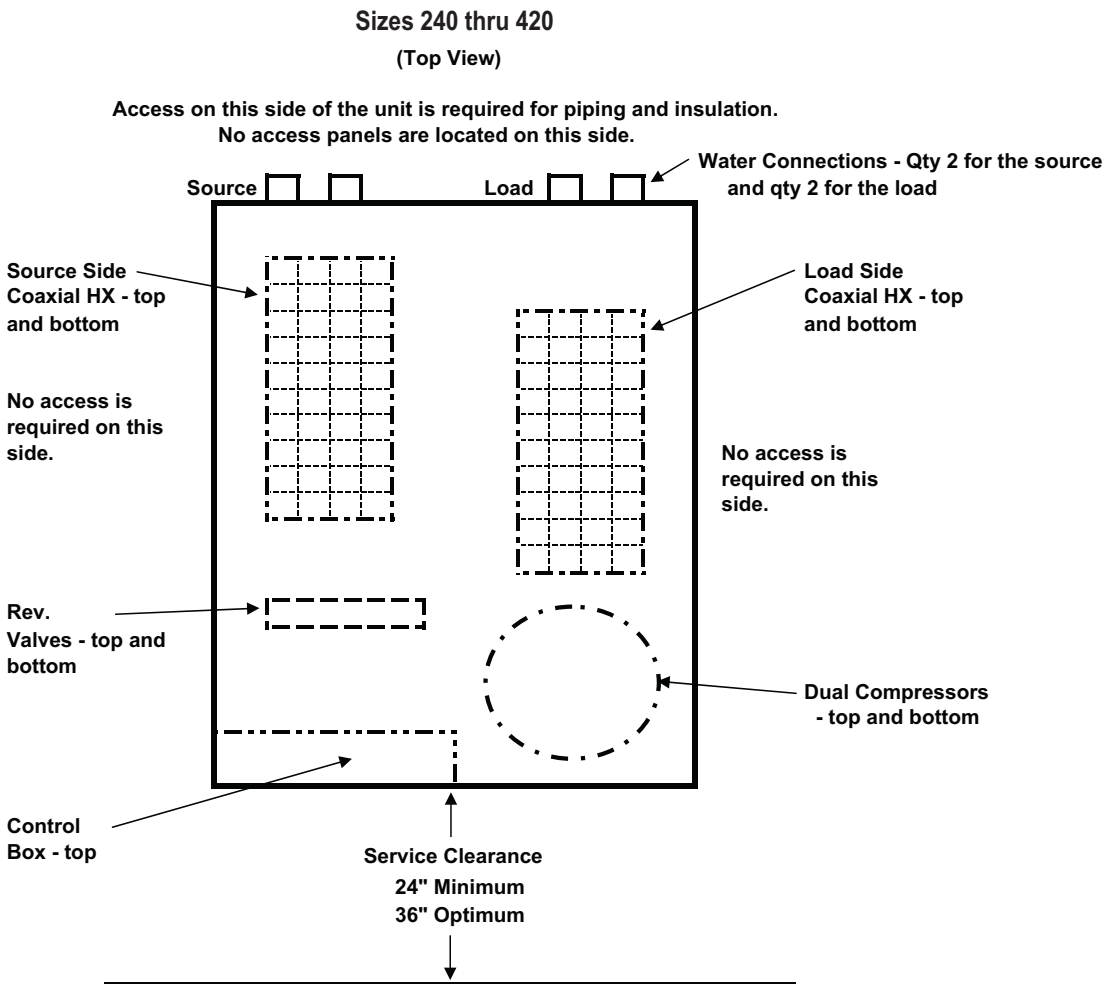

→ **Fig. 4 — Service Clearances (cont)**

PROTECTION — Once the units are properly positioned on the jobsite, they must be covered with either a shipping carton, vinyl film, or an equivalent protective covering. Open ends of pipes stored on the jobsite must be capped. This precaution is especially important in areas where painting, plastering, or spraying of fireproof material, etc., is not yet complete. Foreign material that is allowed to accumulate within the units can prevent proper start-up and necessitate costly clean-up operations.

Before installing any of the system components, be sure to examine each pipe, fitting, and valve, and remove any dirt or foreign material found in or on these components.

⚠ CAUTION

DO NOT store or install units in corrosive environments or in locations subject to temperature or humidity extremes (e.g., attics, garages, rooftops, etc.). Corrosive conditions and high temperature or humidity can significantly reduce performance, reliability, and service life. Always move units in an upright position. Tilting units on their sides may cause equipment damage.

INSPECT UNIT — To prepare the unit for installation, complete the procedures listed below:

1. Compare the electrical data on the unit nameplate with ordering and shipping information to verify that the correct unit has been shipped.
2. Verify that the unit is the correct model for the entering water temperature of the job.
3. Wait to remove the packaging until the unit is ready for installation.
4. Verify that the refrigerant tubing is free of kinks or dents, and that it does not touch other unit components.
5. Inspect all electrical connections. Be sure connections are clean and tight at the terminals.
6. Loosen bolts and remove shipping clamps on compressors equipped with external spring vibration isolators. Compressors are internally spring-mounted.
7. Locate and verify any accessory kit located in compressor section.
8. Remove any access panel screws that may be difficult to remove once unit is installed.

Step 3 — Locate Unit — The following guidelines should be considered when choosing a location for the WSHP:

- Units are for indoor use only.
- Provide sufficient space for water and electrical connections.
- Locate unit in an area that allows for easy access and removal of access panels.
- Allow enough space for service personnel to perform maintenance.

Step 4 — Mount Unit — Rod attachments must be able to support the weight of the unit. See Tables 1 and 2 for unit operating weight.

Step 5 — Connect Piping — Supply and return piping must be as large as the unit connections on the heat pump (larger on long runs). Never use flexible hoses of a smaller inside diameter than that of the water connections on the unit. The water-to-water series units are supplied with either a copper or optional cupro-nickel condenser. Should your well driller express concern regarding the quality of the well water available or should any known hazards exist in your area, Carrier recommends proper testing to assure the well water quality is suitable for use with water source equipment. In conditions anticipating moderate scale formation or in brackish water a cupro-nickel heat exchanger is recommended.

⚠ CAUTION

Galvanized pipe or fittings are not recommended for use with these units due to the possible galvanic corrosion.

Both the supply and discharge water lines will sweat if subject to low water temperature. These lines should be insulated to prevent damage from condensation.

All manual flow valves used in the system must be ball valves. Globe and gate valves must not be used due to high pressure drop and poor throttling characteristics.

Never exceed the recommended water flow rates. Serious damage or erosion of the water to refrigerant heat exchanger could occur.

⚠ CAUTION

Improper heat exchanger fluid flow due to piping, valving or improper pump operation is hazardous to the unit and constitutes abuse which will void the heat exchanger and compressor warranty.

Always check carefully for water leaks and repair appropriately. Units are equipped with female pipe thread fittings. Consult the specification sheets for sizes. Thread sealant should be used when connecting water piping connections to the units to insure against leaks and possible heat exchanger fouling. Do not overtighten the connections. Flexible hoses should be used between the unit and the rigid system to avoid possible vibration. Ball valves should be installed in the supply and return lines for unit isolation and unit flow balancing.

WATER SUPPLY AND QUALITY — Check water supply. Water supply should be plentiful and of good quality. See Table 3 for water quality guidelines.

IMPORTANT: Failure to comply with the above required water quality and quantity limitations and the closed-system application design requirements may cause damage to the tube-in-tube heat exchanger that is not the responsibility of the manufacturer.

In all applications, the quality of the water circulated through the heat exchanger must fall within the ranges listed in the Water Quality Guidelines table. Consult a local water treatment firm, independent testing facility, or local water authority for specific recommendations to maintain water quality within the published limits.

COOLING TOWER/BOILER APPLICATION (Fig. 5) — To assure adequate cooling and heating performance, the cooling tower and boiler fluid loop temperature should be maintained between 50 F and 100 F. In the cooling mode, heat is rejected from the unit into the condenser water loop. A cooling tower provides evaporative cooling to the loop water; thus, maintaining a constant supply temperature to the unit. When utilizing an open cooling tower, chemical water treatment is mandatory to ensure the water is free of corrosive materials. A secondary heat exchanger (plate frame between the unit and the open cooling tower) may also be used. It is imperative that all air is eliminated from the closed loop side of the heat exchanger to prevent condenser fouling.

In the heating mode, heat is absorbed from the condenser water loop to the unit. A boiler can be utilized to maintain the loop within the proper temperature range. In milder climates a "flooded tower" concept is often used. This concept involves adding make-up water to the cooling tower sump to maintain the desired loop temperature. No unit should be connected to the supply or return piping until the water system has been completely cleaned and flushed to remove any dirt, piping chips or other foreign material. Supply and return hoses should be connected together during this process to ensure the entire system is properly flushed. After the cleaning and flushing has taken place, the unit may be connected to the water loop and should have all valves wide open.

Pressure/temperature ports are recommended in both the supply and return lines for systen flow balancing. Water flow can be accurately set by measuring the refrigerant-to-water heat exchangers water side pressure drop.

WELL WATER SYSTEMS (Fig. 6) — Water quantity should be plentiful, between 1.5 and 2.5 gpm per ton of cooling, and of good quality. To avoid the possibility of freezing the well water should be above 50 F.

Water pressure must always be maintained in the heat exchanger by placing a water control valve on the outlet of the water-to-water unit. A bladder type expansion tank may be used to maintain pressure on the system.

Avoid using low voltage (24 volt) solenoids, using them may overload the unit transformer or interfere with the lock-out circuit. Line voltage solenoids connected across the load side (T1, T2) of the compressor contactor are preferred.

Pilot operated or slow closing valves are recommended to reduce water hammer.

The discharge water from the water-to-water unit is not contaminated in any manner and can be disposed of in various ways depending on the local codes (i.e. discharge well, dry well, storm sewer, drain field, stream, pond, etc.)

EARTH COUPLED GEOTHERMAL SYSTEMS (Fig. 7) — Closed loop and pond applications require specialized design knowledge. No attempt at these installations should be made unless the dealer has received specialized training.

Utilizing the Ground Loop Pumping Package (GLP), makes the installation easy. Anti-freeze solutions are utilized when entering loop temperatures drop below 40 F or where piping will be routed through areas subject to freezing. A flow rate between 2.5 to 3.0 gpm per nominal ton of cooling is recommended for this application.

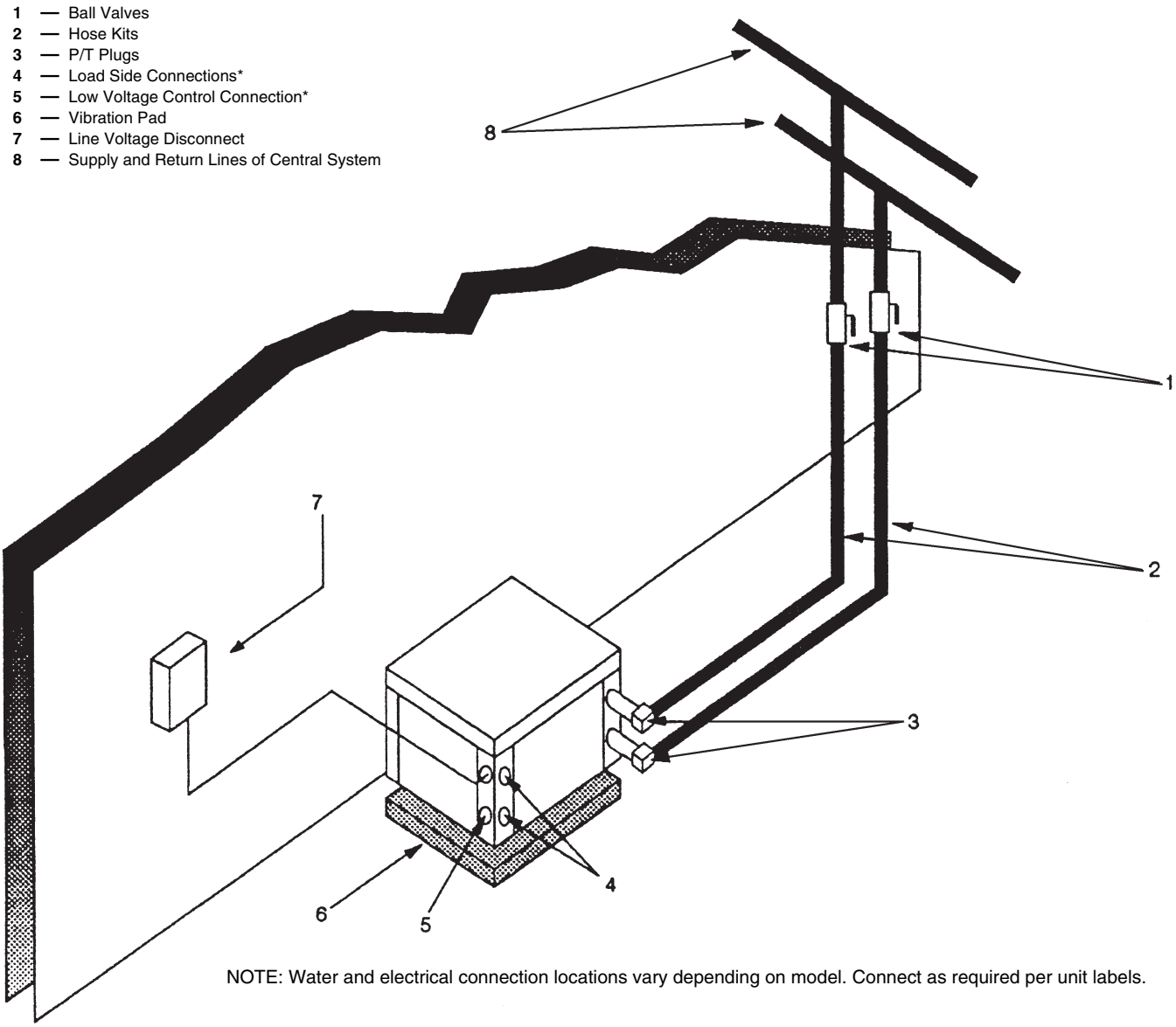

NOTE: Water and electrical connection locations vary depending on model. Connect as required per unit labels.

Fig. 5 — Typical Tower/Boiler Application (Source Side)

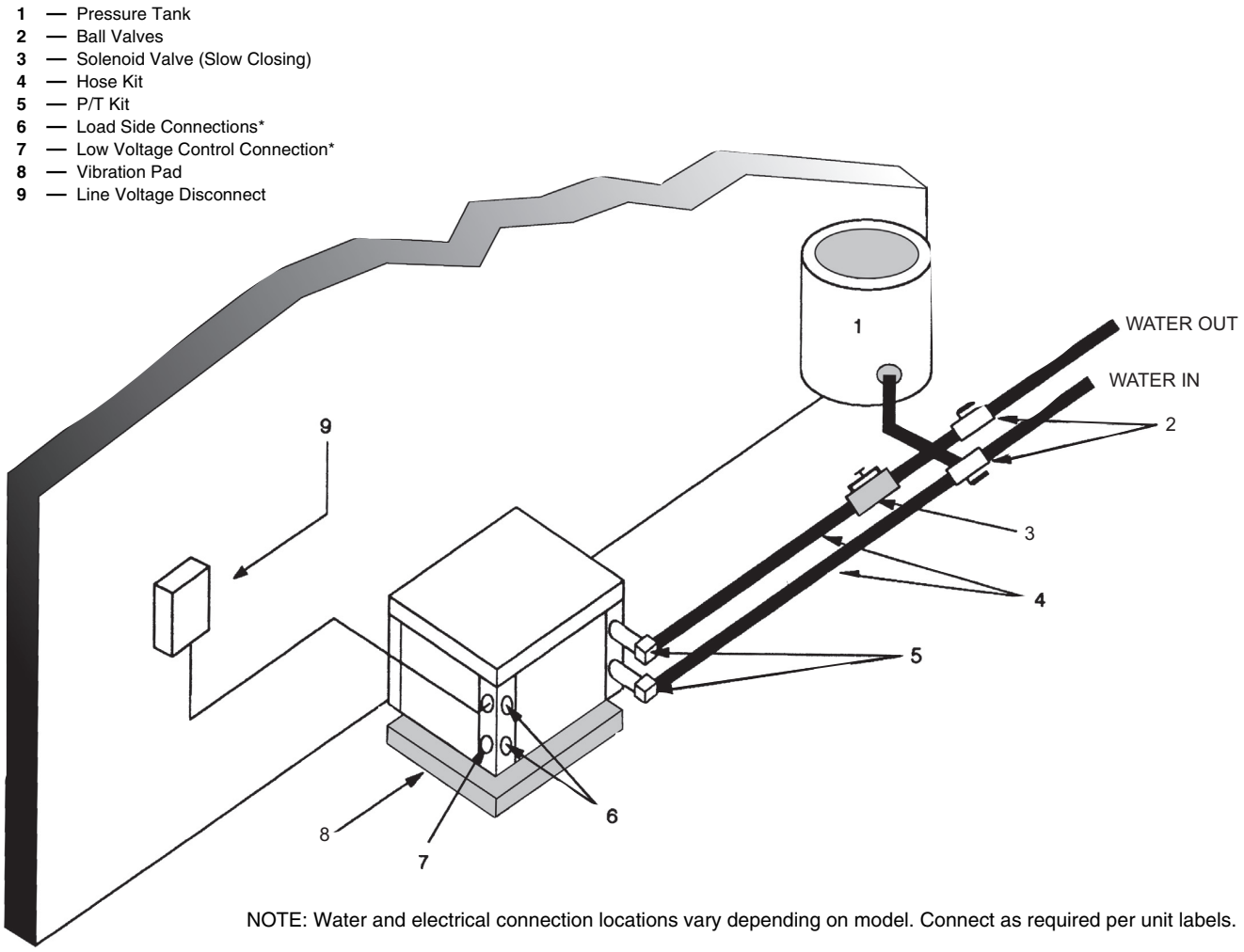

NOTE: Water and electrical connection locations vary depending on model. Connect as required per unit labels.

Fig. 6 — Typical Well Water Application (Source Side)

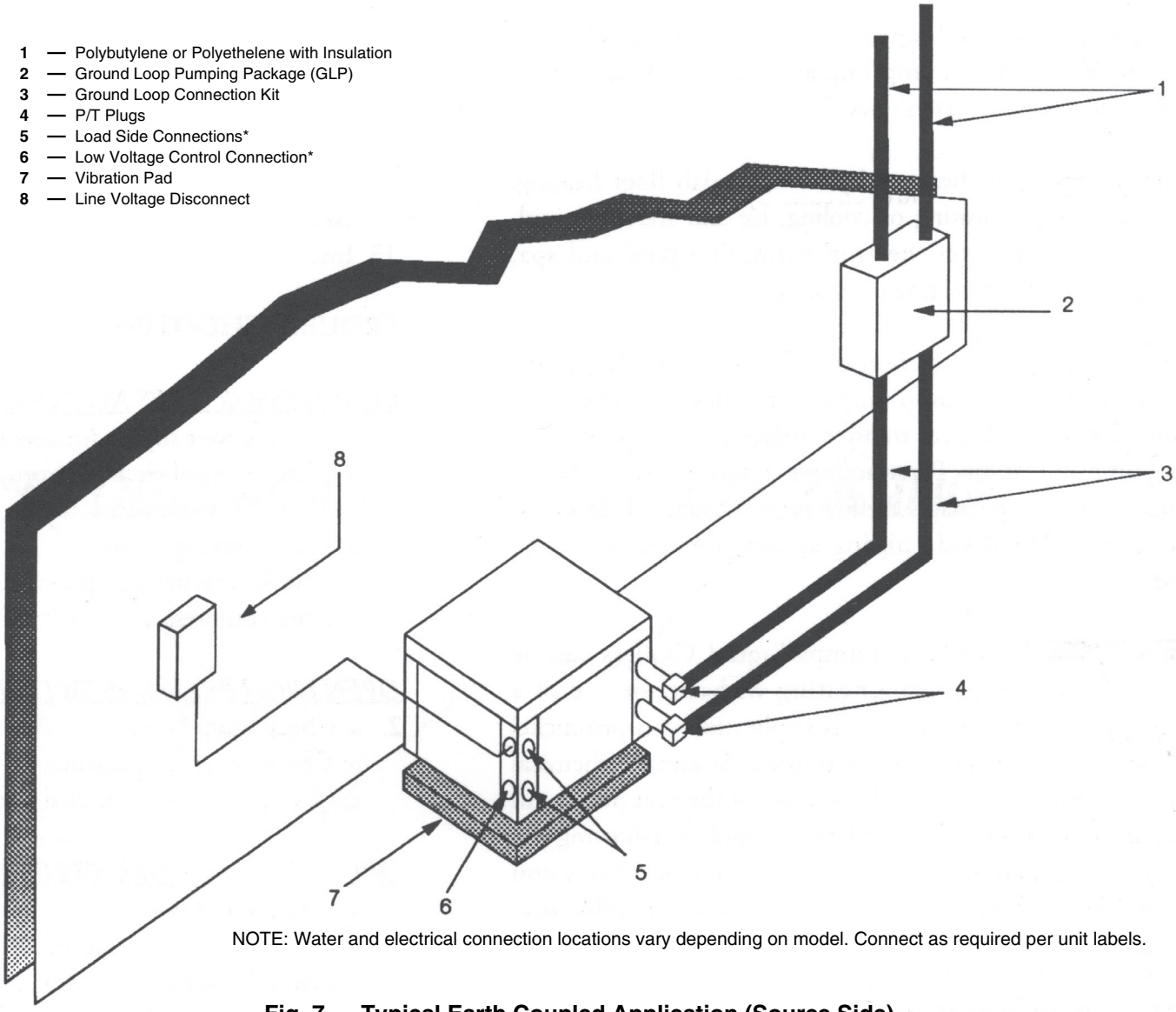

NOTE: Water and electrical connection locations vary depending on model. Connect as required per unit labels.

Fig. 7 — Typical Earth Coupled Application (Source Side)

Table 3 — Water Quality Guidelines

CONDITION	HX MATERIAL*	CLOSED RECIRCULATING†	OPEN LOOP AND RECIRCULATING WELL**		
Scaling Potential — Primary Measurement Above the given limits, scaling is likely to occur. Scaling indexes should be calculated using the limits below.					
pH/Calcium Hardness Method	All	N/A	**pH < 7.5 and Ca Hardness, <100 ppm**		
Index Limits for Probable Scaling Situations (Operation outside these limits is not recommended.)					
Scaling indexes should be calculated at 150 F for direct use and HWG applications, and at 90 F for indirect HX use. A monitoring plan should be implemented.					
Ryznar Stability Index	All	N/A	**6.0 - 7.5** If >7.5 minimize steel pipe use.		
Langelier Saturation Index	All	N/A	**–0.5 to +0.5** If <–0.5 minimize steel pipe use. Based upon 150 F HWG and direct well, 85 F indirect well HX.		
Iron Fouling					
Iron Fe^{2+} (Ferrous) (Bacterial Iron Potential)	All	N/A	**<0.2 ppm (Ferrous)** If Fe^{2+} (ferrous) >0.2 ppm with pH 6 - 8, O_2<5 ppm check for iron bacteria.		
Iron Fouling	All	N/A	**<0.5 ppm of Oxygen** Above this level deposition will occur.		
Corrosion Prevention††					
pH	All	6 - 8.5 Monitor/treat as needed.	**6 - 8.5** Minimize steel pipe below 7 and no open tanks with pH <8.		
Hydrogen Sulfide (H_2S)	All	N/A	**<0.5 ppm** At H_2S>0.2 ppm, avoid use of copper and cupronickel piping of HXs. Rotten egg smell appears at 0.5 ppm level. Copper alloy (bronze or brass) cast components are okay to <0.5 ppm.		
Ammonia Ion as Hydroxide, Chloride, Nitrate and Sulfate Compounds	All	N/A	**<0.5 ppm**		
Maximum Chloride Levels			Maximum allowable at maximum water temperature.		
			50 F (10 C)	75 F (24 C)	100 F (38 C)
	Copper	N/A	<20 ppm	NR	NR
	Cupronickel	N/A	<150 ppm	NR	NR
	304 SS	N/A	<400 ppm	<250 ppm	<150 ppm
	316 SS	N/A	<1000 ppm	<550 ppm	<375 ppm
	Titanium	N/A	>1000 ppm	>550 ppm	>375 ppm
Erosion and Clogging					
Particulate Size and Erosion	All	<10 ppm of particles and a maximum velocity of 6 fps. Filtered for maximum 800 micron size.	<10 ppm (<1 ppm "sandfree" for reinjection) of particles and a maximum velocity of 6 fps. Filtered for maximum 800 micron size. Any particulate that is not removed can potentially clog components.		

LEGEND

HWG— Hot Water Generator
HX — Heat Exchanger
N/A — Design Limits Not Applicable Considering Recirculating Potable Water
NR — Application Not Recommended
SS — Stainless Steel

*Heat exchanger materials considered are copper, cupronickel, 304 SS (stainless steel), 316 SS, titanium.
†Closed recirculating system is identified by a closed pressurized piping system.
**Recirculating open wells should observe the open recirculating design considerations.

††If the concentration of these corrosives exceeds the maximum allowable level, then the potential for serious corrosion problems exists.
Sulfides in the water quickly oxidize when exposed to air, requiring that no agitation occur as the sample is taken. Unless tested immediately at the site, the sample will require stabilization with a few drops of one Molar zinc acetate solution, allowing accurate sulfide determination up to 24 hours after sampling. A low pH and high alkalinity cause system problems, even when both values are within ranges shown. The term pH refers to the acidity, basicity, or neutrality of the water supply. Below 7.0, the water is considered to be acidic. Above 7.0, water is considered to be basic. Neutral water contains a pH of 7.0.
To convert ppm to grains per gallon, divide by 17. Hardness in mg/l is equivalent to ppm.

Step 6 — Wire Electrical Connections

⚠ WARNING

To avoid possible injury or death due to electrical shock, open the power supply disconnect switch and secure it in an open position during installation. Install lockout tag.

⚠ CAUTION

Use only copper conductors for field-installed electrical wiring. Unit terminals are not designed to accept other types of conductors. Failure to heed this warning could result in equipment damage.

All field wiring must comply with local and national fire, safety and electrical codes. Power to the unit must be within the operating voltage range indicated on the unit's nameplate. On three phase units, phases must be balanced within 2%.

Properly sized fuse or HACR (heating, air-conditioning, and refrigeration) circuit breakers must be installed for branch circuit protection. See equipment rating plate for maximum size.

The unit is supplied with an opening for attaching conduit. Be certain to connect the ground lead to the ground lug in the control box. Connect the power leads as indicated on the unit wiring diagram. See Table 4 and Fig. 8-11.

Table 4 — 50PSW Electrical Data

50PSW UNIT SIZE	VOLTAGE (V-Ph-Hz)	COMPRESSOR			MCA	MAX FUSE
		QTY	RLA	LRA		
025	208/230-1-60	1	11.7	58.3	14.6	25
	265-1-60	1	9.1	54.0	11.4	20
	208/230-3-60	1	6.5	55.4	8.1	15
035	208/230-1-60	1	15.3	83.0	19.1	30
	265-1-60	1	13.0	72.0	16.3	25
	208/230-3-60	1	11.6	73.0	11.6	25
	460-3-60	1	5.7	38.0	7.1	15
049	208/230-1-60	1	21.2	104.0	26.5	45
	208/230-3-60	1	14.0	83.1	17.5	30
	460-3-60	1	6.4	41.0	8.0	15
061	208/230-1-60	1	27.1	152.9	33.9	60
	208/230-3-60	1	16.5	110.0	20.6	35
	460-3-60	1	7.2	52.0	9.0	15
071	208/230-1-60	1	29.7	179.2	37.1	60
	208/230-3-60	1	17.6	136.0	22.0	35
	460-3-60	1	8.5	66.1	10.6	15
122	208/230-1-60	2	28.3	178.0	63.7	90
	208/230-3-60	2	19.2	136.0	43.2	60
	460-3-60	2	8.7	66.1	19.6	25
180	208/230-3-60	1	48.1	245.0	60.1	100
	460-3-60	1	18.6	125.0	23.3	40
	575-3-60	1	14.7	100.0	18.4	30
210	208/230-3-60	1	55.8	340.0	69.8	125
	460-3-60	1	26.9	173.0	33.6	60
	575-3-60	1	23.7	132.0	29.6	50
240	208/230-3-60	2	33.3	239.0	74.9	100
	460-3-60	2	17.9	125.0	40.3	50
	575-3-60	2	12.8	80.0	28.8	40
360	208/230-3-60	2	48.1	245.0	108.2	150
	460-3-60	2	18.6	125.0	41.9	60
	575-3-60	2	14.7	100.0	33.1	45
420	208/230-3-60	2	55.8	340.0	125.6	175
	460-3-60	2	26.9	173.0	60.5	80
	575-3-60	2	23.7	132.0	53.3	70

LEGEND

LRA — Locked Rotor Amps
MCA — Minimum Circuit Amps
RLA — Rated Load Amps

STATUS LED - BLINK CODES	
1	HIGH PRESSURE FAULT
2	LOW PRESSURE FAULT
3	CONDENSER FREEZE CONDITION
4	CONDENSATE OVERFLOW FAULT
5	BROWNOUT FAULT
6	LOAD FREEZE CONDITION

TRANFORMER PRIMARY LEAD CLR:	
120	– WHT
208	– RED
240	– ORG
277	– BRN
380	– PUR OR YEL
460	– BLK/RED
575	– GRY

FACTORY WIRE ————————
FIELD WIRE - - - - - - - - - -

STANDARD COMPONENTS LEGEND:
AUX – AUXILIARY RELAY (FOR LOOP PUMP, ETC)
CADM– COMFORT ALERT DIAGNOSTIC MODULE
CAP – COMPRESSOR CAPACITOR
CBR – 24V CIRCUIT BREAKER
CC – COMPRESSOR CONTACTOR
FS – FREEZE SENSOR
HPS – HIGH PRESSURE SWITCH
LP – LOOP PUMP
LPS – LOW PRESSURE SWITCH
RV – REVERSIG VALVE (HEAT PUMPS)
Y2S – SECOND STAGE SOLENOID (SHIFTS COMPRESSOR TO FULL CAPACITY)

OPTIONAL COMPONENTS LEGEND:
[ ] EMS – ENERGY MGNT SYSTEM RELAY
[ ] DS – DISCONNECT SWITCH
[ ] HRP – HEAT RECOVERY PACKAGE, INCLUDES:
HRPM– HEAT RECOVERY PUMP
LGL – LOW GAS TEMP LIMT
HWL – HOT WATER LIMIT
SWT – ON/OFF SWITCH OVERLOAD PROTECTION

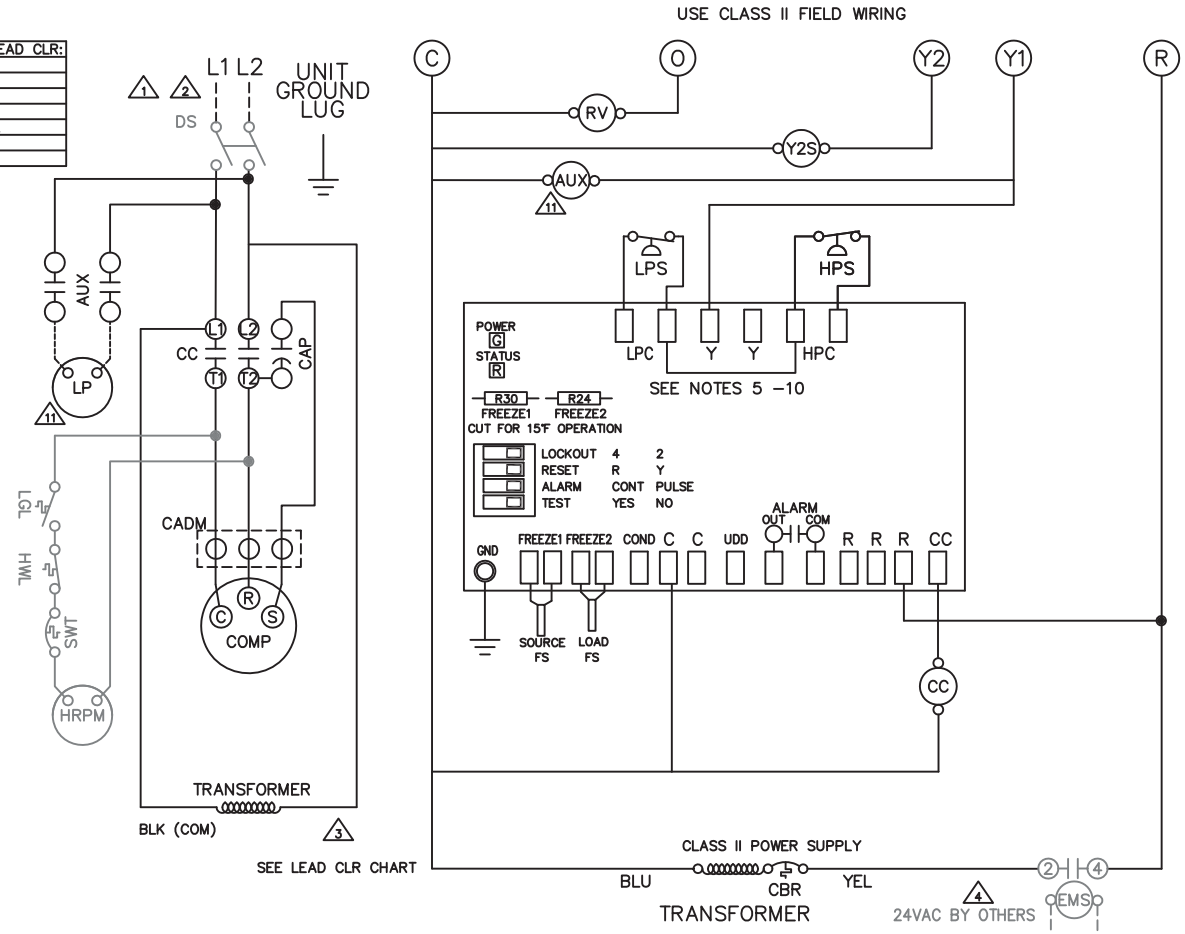

NOTES:
1. SEE UNIT NAME PLATE FOR ELECTRICAL RATING.
2. ALL FIELD WIRING MUST BE IN ACCORDANCE WITH N.E.C.–N.F.P.A. #70, COPPER CONDUCTORS ONLY.
3. 208/230V UNITS ARE FACTORY WIRED FOR 230V OPERATION. FOR 208V OPERATION, REMOVE ORG LEAD AND REPLACE WITH RED LEAD. CAP ALL UNUSED LEADS.
4. FOR ALTERNATE EMS COIL VOLTAGES CONSULT FACTORY.
5. COMPLETE C INCLUDES BUILT IN: 270-300 SECOND RANDOM START
   300 SECOND DELAY ON BREAK
   120 SECOND LOW PRESSURE BYPASS
6. "TEST" DIP SWITCH REDUCES DELAYS TO 10 SEC WHEN SET TO YES. MUST BE SET TO "NO" FOR NORMAL OPERATION.
7. "FREEZE SENSOR" WILL OPERATE AT 26°F BY DEFAULT, IF 15°F OPERATION IS REQUIRED JUMPER R30 (FS1) and R24 (FS2)MUST BE CUT IF FREEZE SENSOR IS NOT INSTALLED A JUMPER SHALL BE INSTALLED BETWEEN THE FREEZE SENSOR TERMINALS.
8. "ALARM OUTPUT" DIP SWITCH MUST BE SET TO "PULSE" IF BLINKING T–STAT SERVICE LIGHT IS DESIRED.
9. DEFAULT SETTINGS FOR COMPLETE C BOARD FROM FACTORY SHOWN
10. ALARM OUTPUT IS NORMALLY OPEN (NO) DRY CONTACT. IF 24 VAC IS NEEDED, CONNECT R TO ALR–COM TERMINAL, 24VAC WILL BE SENSED ON THE ALR–OUT WHEN THE UNIT IS IN ALARM CONDITION. OUTPUT WILL BE PULSED IF PULSE IS SELECTED.
11. LOOP PUMP BY OTHERS AUXILIARY RELAY CONTACTS RATED 208–230VAC 6A MAX.

Fig. 8 — Unit Sizes 025-071, Single-Phase Complete C Control Board

FACTORY WIRE ————
FIELD WIRE — — —

TRANFORMER PRIMARY LEAD CLR:	
120	– WHT
208	– RED
240	– ORG
277	– BRN
380	– PUR OR YEL
460	– BLK/RED
575	– GRY

STATUS LED/ALARM BLINK CODES	
1	HIGH PRESSURE FAULT – CKT 1
2	LOW PRESSURE FAULT – CKT 1
3	HIGH PRESSURE FAULT – CKT 2
4	LOW PRESSURE FAULT – CKT 2
5	FREEZE SENSOR FAULT
6	CONDENSATE FAULT
7	BROWN OUT FAULT

STANDARD COMPONENTS LEGEND:

#1 - COMPRESSOR FIRST STAGE
#2 - COMPRESSOR SECOND STAGE
AUX - AUXILIARY RELAY (FOR LOOP PUMP, ETC.)
CADM- COMFORT ALERT DIAGNOSTIC MODULE
CAP - COMPRESSOR RUN CAPACITOR
CBR - 24VAC CIRCUIT BREAKER)
CC - COMPRESSOR CONTACTOR
FS - FREEZE SENSOR
HPS - HIGH PRESSURE SWITCH
LP - LOOP PUMP
LPS - LOW PRESSURE SWITCH
RV - REVERSING VALVE(HEAT PUMPS ONLY)
RVR - REVERSING VALVE PILOT RELAY
TSR - THERMISTOR SWITCHING RELAY

OPTIONAL COMPONENTS LEGEND:

[ ] EMS - ENERGY MGMNT SYSTEM RELAY
[ ] HRP - HEAT RECOVERY PACKAGE INCLUDES:
HRPM - HEAT RECOVERY PUMP MOTOR
HWL - HOT WATER LIMIT (120 OR 140 DEG)
LGL - LOW GAS TEMP LIMIT
SWT - ON/OFF SWITCH AND OVERLOAD PROTECTION

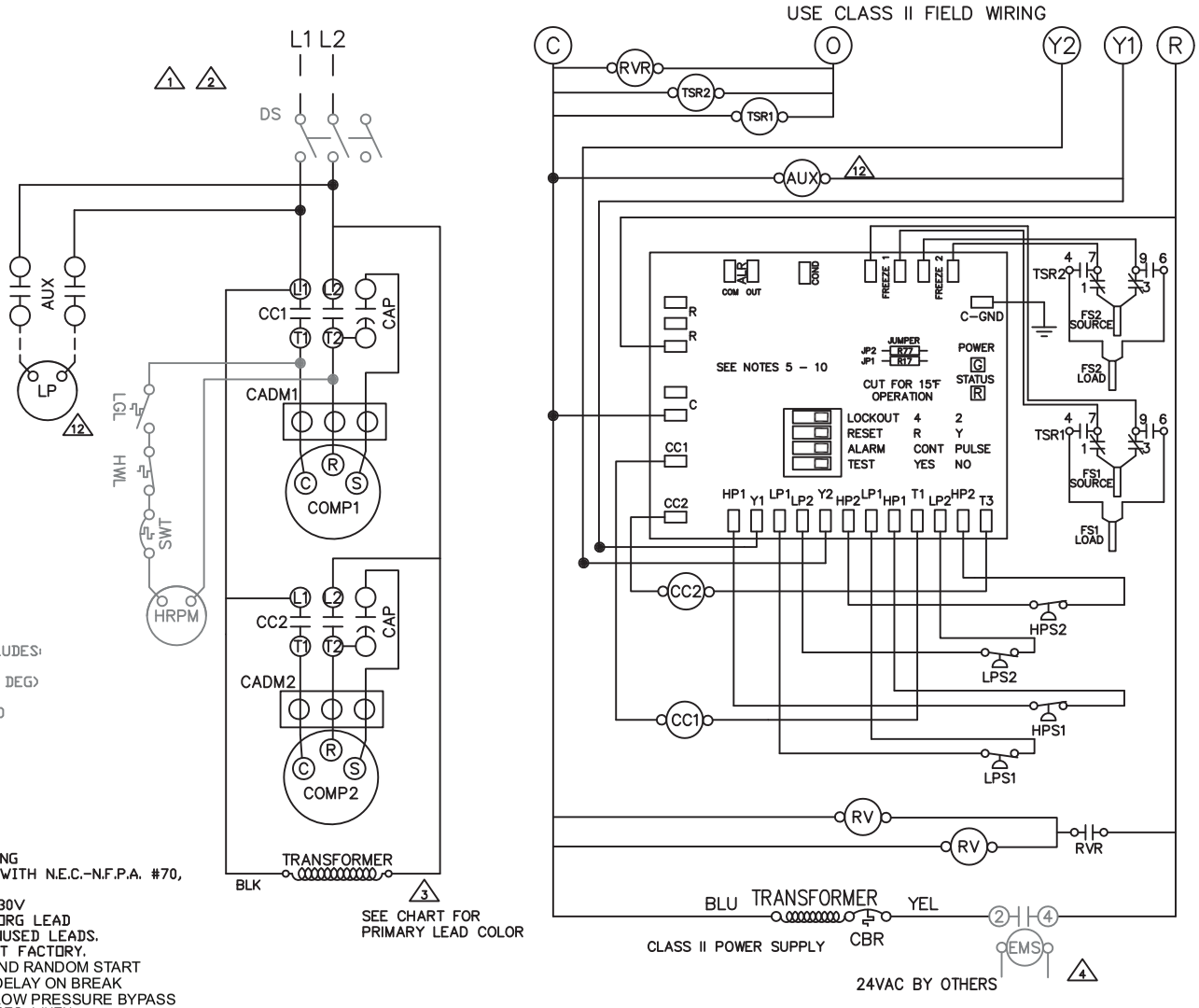

NOTES:

1. SEE UNIT NAME PLATE FOR ELECTRICAL RATING
2. ALL FIELD WIRING MUST BE IN ACCORDANCE WITH N.E.C.-N.F.P.A. #70, COPPER CONDUCTORS ONLY.
3. 208/230V UNITS ARE FACTORY WIRED FOR 230V OPERATION. FOR 208V OPERATION, REMOVE ORG LEAD AND REPLACE WITH RED LEAD. CAP ALL UNUSED LEADS.
4. FOR ALTERNATE EMS COIL VOLTAGES CONSULT FACTORY.
5. COMPLETE C INCLUDES BUILT IN: 270-300 SECOND RANDOM START
   300 SECOND DELAY ON BREAK
   120 SECOND LOW PRESSURE BYPASS
6. 'TEST' DIP SWITCH REDUCES DELAYS TO 10 SEC WHEN SET TO YES. MUST BE SET TO 'NO' FOR NORMAL OPERATION.
7. 'FREEZE SENSOR' WILL OPERATE AT 30°F BY DEFAULT, IF 15°F OPERATION IS REQUIRED JUMPERS R77 & R17 MUST BE CUT IF FREEZE SENSOR IS NOT INSTALLED A JUMPER SHALL BE INSTALLED BETWEEN THE FREEZE SENSOR TERMINALS.
8. 'ALARM OUTPUT' DIP SWITCH MUST BE SET TO 'PULSE' IF BLINKING T-STAT SERVICE LIGHT IS DESIRED.
9. DEFAULT SETTINGS FOR COMPLETE C BOARD FROM FACTORY SHOWN
10. ALARM OUTPUT IS NORMALLY OPEN (NO) DRY CONTACT. IF 24 VAC IS NEEDED, CONNECT R TO ALR-COM TERMINAL, 24VAC WILL BE SENSED ON THE ALR-OUT WHEN THE UNIT IS IN ALARM CONDITION. OUTPUT WILL BE PULSED IF PULSE IS SELECTED.
12. FACTORY MOUNTED LOOP PUMP OR TWO WAY WATER VALVE. BOTH DEVICES WILL NOT BE PRESENT IN THE SAME UNIT.

Fig. 9 — Unit Size 122, Single-Phase Complete C Control Board

STATUS LED - BLINK CODES	
1	HIGH PRESSURE FAULT
2	LOW PRESSURE FAULT
3	CONDENSER FREEZE CONDITION
4	CONDENSATE OVERFLOW FAULT
5	BROWNOUT FAULT
6	EVAPORATOR FREEZE CONDITION

TRANFORMER PRIMARY LEAD CLR:	
120	– WHT
208	– RED
240	– ORG
277	– BRN
380	– PUR OR YEL
460	– BLK/RED
575	– GRY

FACTORY WIRE ————————
FIELD WIRE - - - - - - - - - -

STANDARD COMPONENTS LEGEND:
AUX – AUXILIARY RELAY (FOR LOOP PUMP, ETC)
CC – COMPRESSOR CONTACTOR
FS – FREEZE SENSORS
HPS – HIGH PRESSURE SWITCH
LPS – LOW PRESSURE SWITCH
LP – LOOP PUMP
RV – REVERSING VALVE (HEAT PUMPS)
Y2S – SECOND STAGE SOLENOID (SHIFTS COMPRESSOR TO FULL CAPACITY)

OPTIONAL COMPONENTS LEGEND:
[ ] CBR – 24 VAC CIRCUIT BREAKER
[ ] DS – DISCONNECT SWITCH
[ ] EMS – ENERGY MGMNT SYSTEM RELAY
[ ] HRP – HEAT RECOVERY PACKAGE:
HRPM– HEAT RECOVERY PUMP MOTOR
HWL – HOT WATER LIMIT
LGL – LOW GAS TEMPERATURE LIMIT
SWT – ON/OFF SWITCH AND OVERLOAD
[ ] PM – PHASE MONITOR
[ ] TB2 – MAIN TERMINAL BLOCK (460V UNITS ONLY)
[ ] TB3 – TERMINAL BLOCK DISCONNECT SWITCH (460V UNITS ONLY)

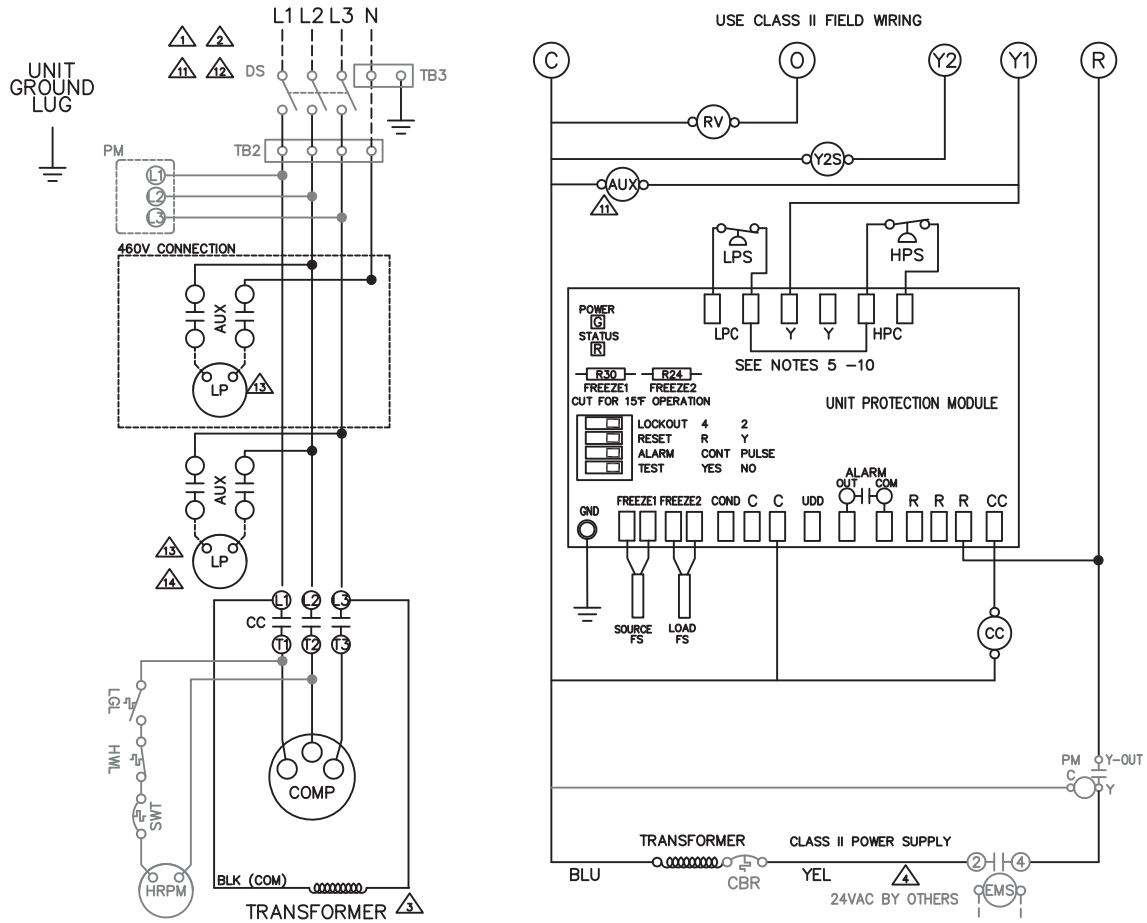

NOTES:
1. SEE UNIT NAME PLATE FOR ELECTRICAL RATING.
2. ALL FIELD WIRING MUST BE IN ACCORDANCE WITH N.E.C.–N.F.P.A. #70, COPPER CONDUCTORS ONLY.
3. 208/230V UNITS ARE FACTORY WIRED FOR 230V OPERATION. FOR 208V OPERATION, REMOVE ORG LEAD AND REPLACE WITH RED LEAD. CAP ALL UNUSED LEADS.
4. FOR ALTERNATE EMS COIL VOLTAGES CONSULT FACTORY.
5. COMPLETE C INCLUDES BUILT IN: 270-300 SECOND RANDOM START
   300 SECOND DELAY ON BREAK
   120 SECOND LOW PRESSURE BYPASS
6. "TEST" DIP SWITCH REDUCES DELAYS TO 10 SEC WHEN SET TO YES. MUST BE SET TO "NO" FOR NORMAL OPERATION.
7. "FREEZE SENSOR" WILL OPERATE AT 26°F BY DEFAULT, IF 15°F OPERATION IS REQUIRED JUMPER R42 MUST BE CUT IF FREEZE SENSOR IS NOT INSTALLED A JUMPER SHALL BE INSTALLED BETWEEN THE FREEZE SENSOR TERMINALS.
8. "ALARM OUTPUT" DIP SWITCH MUST BE SET TO "PULSE" IF BLINKING T–STAT SERVICE LIGHT IS DESIRED.
9. DEFAULT SETTINGS FOR COMPLETE C BOARD FROM FACTORY SHOWN
10. ALARM OUTPUT IS NORMALLY OPEN (NO) DRY CONTACT. IF 24 VAC IS NEEDED, CONNECT R TO ALR–COM TERMINAL, 24VAC WILL BE SENSED ON THE ALR–OUT WHEN THE UNIT IS IN ALARM CONDITION. OUTPUT WILL BE PULSED IF PULSE IS SELECTED.
11. CHECK FOR PROPER PHASE ROTATION ON UNITS WITH SCROLL COMPRESSORS. REVERSE ROTATION WILL DAMAGE THE COMPRESSOR AND VOID UNIT WARRANTY.
12. TERMINAL BLOCK TB3 LOCATED IN SIDE DISCONNECT SWITCH BOX.
13. LOOP PUMP BY OTHERS AUXILIARY RELAY CONTACTS RATED 208–230VAC 6A MAX.
14. PUMP MOTOR IS WIRED BETWEEN LINE AND NEUTRAL FOR 380–460VAC UNITS. FOR 208/230VAC UNITS PUMP MOTOR IS WIRED BETWEEN LINES.

Fig. 10 — Unit Sizes 025-071, 180, and 210, 3-Phase Complete C Control Board

TRANFORMER PRIMARY LEAD CLR:	
120	– WHT
208	– RED
240	– ORG
277	– BRN
380	– PUR OR YEL
460	– BLK/RED
575	– GRY

STATUS LED/ALARM BLINK CODES	
1	HIGH PRESSURE FAULT – CKT 1
2	LOW PRESSURE FAULT – CKT 1
3	HIGH PRESSURE FAULT – CKT 2
4	LOW PRESSURE FAULT – CKT 2
5	FREEZE SENSOR FAULT
6	CONDENSATE FAULT
7	BROWN OUT FAULT

FACTORY WIRE ————
FIELD WIRE — — —

STANDARD COMPONENTS LEGEND:

#1 - COMPRESSOR FIRST STAGE
#2 - COMPRESSOR SECOND STAGE
AUX - AUXILIARY RELAY (FOR LOOP PUMP, ETC.)
CBR - 24 VAC CIRCUIT BREAKER
CC - COMPRESSOR CONTACTOR
FS - FREEZE SENSOR
HPS - HIGH PRESSURE SWITCH
LP - LOOP PUMP
LPS - LOW PRESSURE SWITCH
RV - REVERSING VALVE(HEAT PUMPS ONLY)
RVR - REVERSING VALVE PILOT RELAY
TB2 - TERMINAL BLOCK LINE VOLT CONNECTION
TSR - THERMISTOR SWITCHING RELAY

OPTIONAL COMPONENTS LEGEND:

[ ] DS - DISCONNECT SWITCH
[ ] EMS - ENERGY MGMNT SYSTEM RELAY
[ ] HRP - HEAT RECOVERY PACKAGE INCLUDES:
HRPM - HEAT RECOVERY PUMP MOTOR
HWL - HOT WATER LIMIT (120 OR 140 DEG)
LGL - LOW GAS TEMP LIMIT
SWT - ON/OFF SWITCH AND OVERLOAD PROTECTION
[ ] PM - PHASE MONITOR

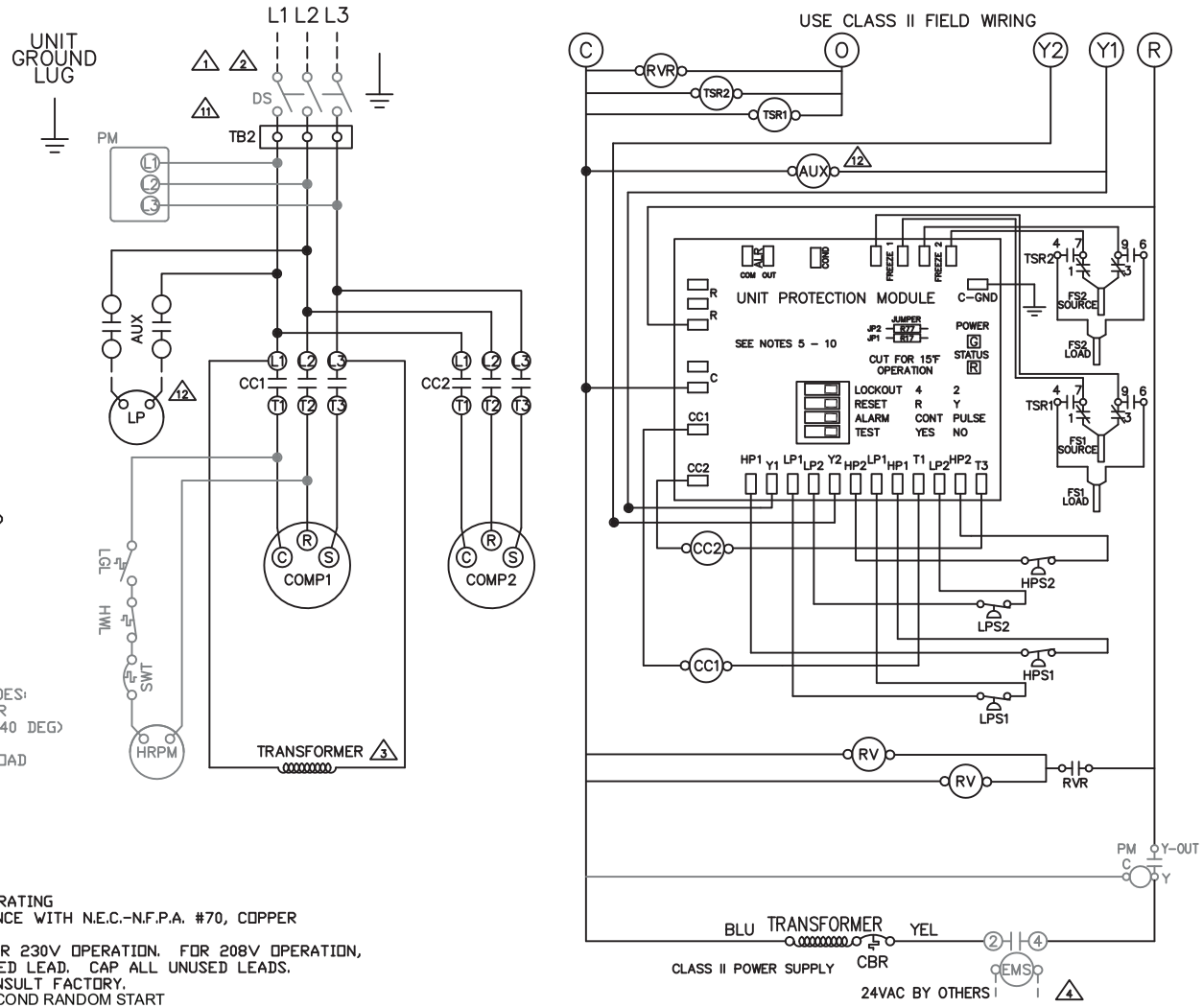

NOTES:
1. SEE UNIT NAME PLATE FOR ELECTRICAL RATING
2. ALL FIELD WIRING MUST BE IN ACCORDANCE WITH N.E.C.–N.F.P.A. #70, COPPER CONDUCTORS ONLY.
3. 208/230V UNITS ARE FACTORY WIRED FOR 230V OPERATION. FOR 208V OPERATION, REMOVE ORG LEAD AND REPLACE WITH RED LEAD. CAP ALL UNUSED LEADS.
4. FOR ALTERNATE EMS COIL VOLTAGES CONSULT FACTORY.
5. COMPLETE C INCLUDES BUILT IN: 270-300 SECOND RANDOM START
   300 SECOND DELAY ON BREAK
   120 SECOND LOW PRESSURE BYPASS
6. 'TEST' DIP SWITCH REDUCES DELAYS TO 10 SEC WHEN SET TO YES. MUST BE SET TO 'NO' FOR NORMAL OPERATION.
7. 'FREEZE SENSOR' WILL OPERATE AT 30°F BY DEFAULT, IF 15°F OPERATION IS REQUIRED JUMPERS R77 & R17 MUST BE CUT
   IF FREEZE SENSOR IS NOT INSTALLED A JUMPER SHALL BE INSTALLED BETWEEN THE FREEZE SENSOR TERMINALS.
8. 'ALARM OUTPUT' DIP SWITCH MUST BE SET TO 'PULSE' IF BLINKING T-STAT SERVICE LIGHT IS DESIRED.
9. DEFAULT SETTINGS FOR COMPLETE C BOARD FROM FACTORY SHOWN.
10. ALARM OUTPUT IS NORMALLY OPEN (NO) DRY CONTACT. IF 24 VAC IS NEEDED, CONNECT R TO ALR-COM TERMINAL, 24VAC WILL BE SENSED ON THE ALR-OUT WHEN THE UNIT IS IN ALARM CONDITION. OUTPUT WILL BE PULSED IF PULSE IS SELECTED.
11. CHECK FOR PROPER PHASE ROTATION ON UNITS WITH SCROLL COMPRESSORS. REVERSE ROTATION WILL DAMAGE THE COMPRESSOR AND VOID UNIT WARRANTY.
12. LOOP PUMP BY OTHERS AUXILIARY RELAY CONTACTS RATED 208–230VAC 6A MAX.

Fig. 11 — Unit Sizes 122 and 240-420, 3-Phase Complete C Control Board

PRE-START-UP

System Checkout — When the installation is complete, follow the system checkout procedure outlined below before starting up the system. Be sure:

1. Voltage is within the utilization range specifications of the unit compressor and fan motor, and voltage is balanced for 3-phase units.
2. Fuses, breakers and wire are correct size.
3. Low voltage wiring is complete.
4. Piping and system flushing is complete.
5. Air is purged from closed loop system.
6. System is balanced as required. Monitor if necessary.
7. Isolation valves are open.
8. Water control valves or loop pumps are wired.
9. Transformer switched to lower voltage tap if necessary.
10. Service/access panels are in place.
11. Control field-selected settings are correct.

FIELD SELECTABLE INPUTS

Jumpers and DIP (dual in-line package) switches on the control board are used to customize unit operation and can be configured in the field.

IMPORTANT: Jumpers and DIP switches should only be clipped when power to control board has been turned off.

Safety Devices and the Complete C Controller — Each unit is factory provided with a Complete C controller that controls the compressor operation and monitors the safety controls that protect the unit. See Fig. 12 for Complete C sequence of operation.

Safety controls include the following:

- For single compressor models (025-071, 180 and 210), Fig. 8 and Fig. 10
  - High-pressure switch inputs are wired across the HPC terminals on the control board
  - Low-pressure switch inputs are wired across the LPC terminals on the control board
  - The standard source side freeze thermistor is wired across the FREEZE 1 terminals on the control board. Cutting the FREEZE 1 diode will change the freeze setting to 15 F for the source sensor.
  - The standard load side freeze thermistor is wired across the FREEZE 2 terminals on the control board. Cutting the FREEZE 2 diode will change the freeze setting to 15 F for the load sensor.
- For dual compressor models (122, 240-420), Fig. 9 and Fig. 11
  - High-pressure switch inputs are wired across the HP1 and HP2 terminals on the control board
  - Low-pressure switch inputs are wired across the LP1 and LP2 terminals on the control board
  - The standard source side freeze thermister is wired across the FREEZE 1 terminals on the control board. Cutting the JP 1 diode will change the freeze setting to 15 F for the source sensor.
  - The standard load side freeze thermister is wired across the FREEZE 2 terminals on the control board. Cutting the JP 2 diode will change the freeze setting to 15 F for the load sensor.
- Optional freeze protection sensor, mounted close to condensing water coil, monitors refrigerant temperature between condensing water coil and thermal expansion valve. If temperature drops below or remains at freeze limit trip for 30 seconds, the controller will shut down the compressor and enter into a soft lockout condition. The default freeze limit trip is 30 F, however this can be changed to 15 F by cutting the R-42 resistor located on top of DIP switch SW1.
- The optional condensate overflow protection sensor is located in the drain pan of the unit and connected to the 'COND' terminal on the Complete C board.

NOTE: If freeze protection sensor is not installed, a jumper between freeze contacts must be installed on the Complete C board otherwise unit will not start.

The Complete C controller includes the following features:

ANTI-SHORT CYCLE TIMER — A 5-minute delay on break timer prevents compressor short cycling.

RANDOM START — Each controller has a unique random start delay ranging from 270 to 300 seconds to reduce the chances of multiple units simultaneously starting after initial power up or after a power interruption, creating a large electrical spike.

LOW PRESSURE BYPASS TIMER — If the compressor is running and the low-pressure switch opens, then the control will keep the compressor on for 120 seconds. After 2 minutes if the low-pressure switch remains open, the control will shut down the compressor and enter a soft lockout. The compressor will not be energized until the low-pressure switch closes and the anti-short cycle time delay expires. If the low-pressure switch opens 2 to 4 times in 1 hour, the unit will enter a hard lockout and need to be reset.

BROWNOUT/SURGE/POWER INTERRUPTION PROTECTION — The brownout protection in the Complete C board will shut down the compressor if the incoming power falls below 18 VAC. The compressor will remain off till the voltage goes above 18 VAC and the anti-short cycle timer (300 seconds) times out. The unit will not go into a hard lockout.

MALFUNCTION OUTPUT — Alarm output is Normally Open (NO) dry contact. If 24 VAC output is needed R must be wired to the ALR-COM terminal; 24 VAC will be available on the ALR-OUT terminal when the unit is in alarm condition. If pulse is selected the alarm output will be pulsed. The fault output will depend on the dip switch setting for "ALARM." If it set to "CONST,' a constant signal will be produced to indicate a fault has occurred and the unit requires inspection to determine the type of fault. If it is set to "PULSE," a pulse signal is produced and a fault code is detected by a remote device indicating the fault. See LED Fault Indication below for blink code explanations. The remote device must have a malfunction detection capability when the Complete C board is set to "PULSE."

TEST DIP SWITCH — A test DIP switch is provided to reduce all time delay settings to 10 seconds during troubleshooting or verification of unit operation. Note that operation of the unit while in test mode can lead to accelerated wear and premature failure of the unit. The "TEST" switch must be set back to "NO" for normal operation.

FREEZE SENSOR — The freeze sensor input is active all the time, if a freeze option is not selected the freeze terminals will need a jumper. There are 2 configurable freeze points, 30 F and 15 F. The unit will enter a soft lockout until the temperature climbs above the set point and the anti-short cycle time delay has expired. The freeze sensor will shut the compressor output down after 90 seconds of water flow loss and report a freeze condition. It is recommended to have a flow switch to prevent the unit from running if water flow is lost. See Fig. 13.

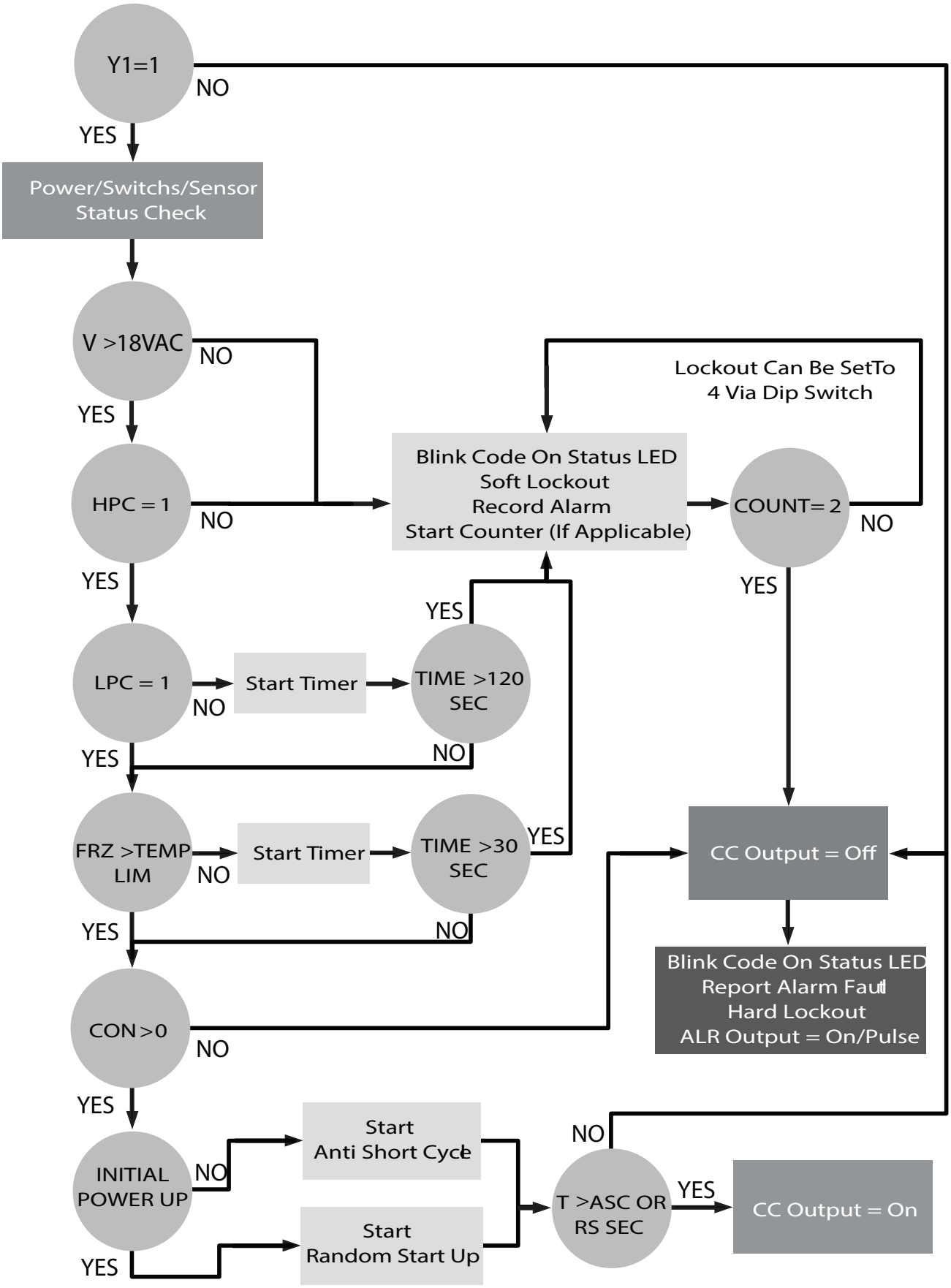

Fig. 12 — Complete C Controller Sequence of Operation

NOTE: If unit is employing a fresh water system (no anti-freeze protection), it is extremely important to have the "Freeze" jumper R-42 resistor set to 30 F in order to shut down the unit at the appropriate leaving water temperature and protect the heat pump from freezing if a freeze sensor is included.

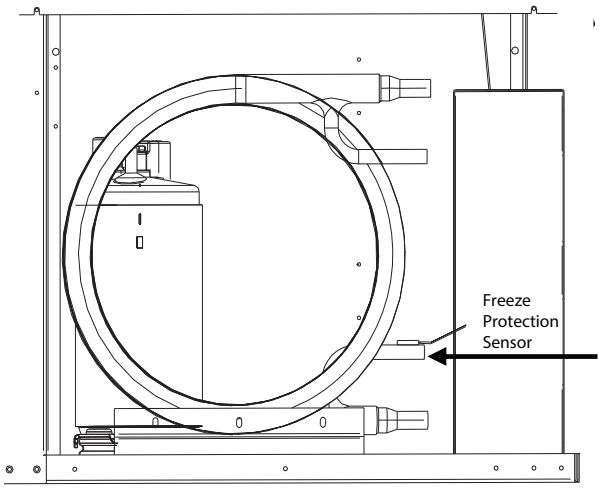

Fig. 13 — Freeze Protection Sensor

LED FAULT INDICATION — Two LED indicators are provided:

Green: Power LED indicates 18 to 30 VAC present at the board.

Red: Fault indicator with blink codes as follows:
- One blink—High pressure lockout
- Two blinks—Low pressure lockout
- Three blinks—Freeze sensor lockout
- Four blinks—Condensate overflow
- Five blinks—Brownout

INTELLIGENT RESET — If a fault condition is initiated, the 5-minute delay on break time period is initiated and the unit will restart after these delays expire. During this period the fault LED will indicate the cause of the fault. If the fault condition still exists or occurs 2 or 4 times (depending on 2 or 4 setting for Lockout DIP switch) before 60 minutes, the unit will go into a hard lockout and requires a manual lockout reset. A single condensate overflow fault will cause the unit to go into a hard lockout immediately, and will require a manual lockout reset.

LOCKOUT RESET — A hard lockout can be reset by turning the unit thermostat off and then back on when the "RESET" DIP switch is set to "Y" or by shutting off unit power at the circuit breaker when the "RESET" DIP switch is set to "R."

NOTE: The blower motor will remain active during a lockout condition.

COMPLETE C BOARD DEFAULT SETTINGS — The Complete C board will come from the factory with the following default settings:
- Freeze—"Terminals not jumped" on all the time
- Temp—30°F
- Lockout—2
- Reset—Y
- Alarm—PULSE
- Test—NO
- Dry Contact—Normally Open (NO)

CONSIDERATIONS
1. Always check incoming line voltage power supply and secondary control voltage for adequacy. Transformer primaries are dual tapped for 208 and 230 volts. Connect the appropriate tap to ensure a minimum of 18 volts secondary control voltage. 24 volts is ideal for best operation.
2. Long length thermostat and control wiring leads may create voltage drop. Increase wire gage or up-size transformers may be required to ensure minimum secondary voltage supply.
3. Carrier recommends the following guidelines for wiring between a thermostat and the unit: 18 GA up to 60 ft, 16 GA up to 100 ft and 14 GA up to 140 ft.
4. Do not apply additional control devices to the control circuit power supply without consulting the factory. Doing so may void equipment warranties.
5. Check with all code authorities on requirements involving condensate disposal/over flow protection criteria.

Table 5 — Cooling Mode Operating Pressure (psig)

ENTERING LOAD/EVAP TEMP (F)	ENTERING SOURCE CONDENSER TEMPERATURE (F)					
	75 F		85 F		95 F	
	Suction Pressure	Discharge Pressure	Suction Pressure	Discharge Pressure	Suction Pressure	Discharge Pressure
65	99-116	290-320	107-123	325-358	107-123	370-400
55	91-107	265-311	91-107	303-350	99-116	370-400
45	76- 91	265-311	76- 91	295-345	83- 99	358-390

Table 6 — Heating Mode Operating Pressure (psig)

ENTERING LOAD TEMP (F)	ENTERING SOURCE CONDENSER TEMPERATURE (F)					
	40 F		60 F		80 F	
	Suction Pressure	Discharge Pressure	Suction Pressure	Discharge Pressure	Suction Pressure	Discharge Pressure
70	68-83	255-290	99-116	270-305	130-145	290-325
90	76-91	350-380	99-116	358-390	130-165	370-400
110	76-91	455-480	99-116	470-500	139-165	480-575

START-UP

Use the procedure outlined below to initiate proper unit start-up.

NOTE: This equipment is designed for indoor installation only.

Operating Limits (See Table 7)

ENVIRONMENT — This equipment is designed for indoor installation ONLY. Extreme variations in temperature, humidity and corrosive water or air will adversely affect the unit performance, reliability and service life.

POWER SUPPLY — A voltage variation of ± 10% of nameplate utilization voltage is acceptable.

NOTE: These operating conditions are not normal or continuous operating conditions. It is assumed that start-up is for the purpose of bringing the building space up to occupancy temperature.

⚠ WARNING

When the disconnect switch is closed, high voltage is present in some areas of the electrical panel. Exercise caution when working with the energized equipment.

Table 7 — 50PSW Unit Operating Limits

WATER LIMITS	COOLING (F)	HEATING (F)
SOURCE COIL		
Min Entering Water	50	20
Normal Entering Water	85	60
Max Entering Water	110	70
LOAD COIL		
Min Entering Water	50	60
Normal Entering Water	60	100
Max Entering Water	90	120

Unit Start-Up

1. Set the primary controller to the highest setting.
2. Set the primary controller system switch to "COOL." The reversing valve solenoid should energize. The compressor should not run.
3. Reduce the primary controller setting approximately 5 degrees below return fluid temperature.
4. Verify the heat pump is operating in the cooling mode.
5. Check the cooling refrigerant pressures against the values listed in Table 5.
6. Turn the primary controller system switch to the "OFF" position. The unit should stop running and the reversing valve should de-energize.
7. Leave the unit off for approximately (5) minutes to allow for system equalization.
8. Turn the primary controller to the lowest setting.
9. Set the primary controller switch to "HEAT."
10. Increase the primary controller setting approximately 5 degrees above the return fluid temperature.
11. Verify the heat pump is operating in the heating mode.
12. Check the heating refrigerant pressures against the values listed in Table 6.
13. Set the primary controller to maintain the desired return fluid temperature.
14. Check for vibrations, leaks, etc.
15. Instruct the owner on the unit and control operation.

Scroll Compressor Rotation — It is important to be certain compressor is rotating in the proper direction. To determine whether or not compressor is rotating in the proper direction:

1. Connect service gages to suction and discharge pressure fittings.
2. Energize the compressor.
3. The suction pressure should drop and the discharge pressure should rise, as is normal on any start-up.

If the suction pressure does not drop and the discharge pressure does not rise to normal levels:

1. Turn off power to the unit. Install disconnect tag.
2. Reverse any two of the unit power leads.
3. Reapply power to the unit and verify pressures are correct. The suction and discharge pressure levels should now move to their normal start-up levels.

⚠ CAUTION

When the compressor is rotating in the wrong direction, the unit makes an elevated level of noise and does not provide cooling. Damage to compressor will occur if allowed to operate in this manner.

After a few minutes of reverse operation, the scroll compressor internal overload protection will open, thus activating the unit lockout. This requires a manual reset. To reset, turn the thermostat on and then off.

NOTE: There is a 5-minute time delay before the compressor will start.

Cleaning and Flushing — Cleaning and flushing of the piping system is the single most important step to ensure proper start-up and continued efficient operation of the system.

⚠ WARNING

To avoid possible injury or death due to electrical shock, open the power supply disconnect switch and secure it in an open position before flushing system. Install lockout tag.

Follow the instructions below to properly clean and flush the system:

1. Verify electrical power to the unit is disconnected and lockout tag installed.
2. Install the system with the supply hose connected directly to the return riser valve. Use a single length of flexible hose.
3. Open all air vents. Fill the system with the water. DO NOT allow system to overflow. Bleed all air from the system. Pressurize and check the system for leaks and repair appropriately.
4. Verify all strainers are in place. Start the pumps, and systematically check each vent to ensure all air is bled from the system.
5. Verify make-up water is available. Adjust make-up water appropriately to replace the air which was bled from the system. Check and adjust the water/air level in the expansion tank.
6. Raise the loop temperature to approximately 85 F. Open the drain at the lowest point in the system. Adjust the make-up water replacement rate to equal the rate of bleed.
7. Refill the system and add trisodium phosphate in a proportion of approximately one pound per 150 gal. of water (or other equivalent approved cleaning agent).

⚠ CAUTION

To avoid possible damage to a plastic (PVC) piping system, do not allow temperatures to exceed 110 F.

Raise the loop temperature to 100 F. Circulate the solution for a minimum of 8 to 24 hours. At the end of this period, shut off the circulating pump and drain the solution. Repeat system cleaning if desired.

8. When the cleaning process is complete, remove the short-circuited hose. Reconnect the hoses to the proper supply, and return the connections to each of the units. Refill the system and bleed off all air.
9. Test the system pH with litmus paper. The system water should be slightly alkaline (pH of 7.5 to 8.5). Add chemicals, as appropriate, to maintain acidity levels.
10. When the system is successfully cleaned, flushed, refilled and bled, restore power.
11. Check the main system panels, safety cutouts and alarms. Set the controls to properly maintain loop temperatures.

⚠ CAUTION

DO NOT use "Stop Leak" or any similar chemical agent in this system. Addition of these chemicals to the loop water will foul the system and inhibit unit operation.

Antifreeze — In areas where entering loop temperatures drop below 40 F or where piping will be routed through areas subject to freezing, antifreeze is needed.

Alcohols and glycols are commonly used as antifreeze agents. Freeze protection should be maintained to 15 F below the lowest expected entering loop temperature. For example, if the lowest expected entering loop temperature is 30 F, the leaving loop temperature would be 22 to 25 F. Therefore, the freeze protection should be at 15 F (30 F – 15 F = 15 F).

IMPORTANT: All alcohols should be pre-mixed and pumped from a reservoir outside of the building or introduced under water level to prevent alcohols from fuming.

Calculate the total volume of fluid in the piping system. See Table 8. Use the percentage by volume in Table 9 to determine the amount of antifreeze to use. Antifreeze concentration should be checked from a well mixed sample using a hydrometer to measure specific gravity.

FREEZE PROTECTION SELECTION — The freeze sensor input is active all the time, if a freeze option is not selected the freeze terminals will need a jumper. There are 2 configurable freeze points, 30 F and 15 F. The unit will enter a soft lockout until the temperature climbs above the set point and the anti-short cycle time delay has expired. The freeze sensor will shut the compressor output down after 90 seconds of water flow loss and report a freeze condition. It is recommended to have a flow switch to prevent the unit from running if water flow is lost.

Table 8 — Approximate Fluid Volume (gal.) per 100 Ft of Pipe

PIPE	DIAMETER (in.)	VOLUME (gal.)
Copper	1	4.1
	1.25	6.4
	1.5	9.2
Rubber Hose	1	3.9
Polyethylene	3/4 IPS SDR11	2.8
	1 IPS SDR11	4.5
	1 1/4 IPS SDR11	8.0
	1/2 IPS SDR11	10.9
	2 IPS SDR11	18.0
	1 1/4 IPS SCH40	8.3
	1 1/2 IPS SCH40	10.9
	2 IPS SCH40	17.0

LEGEND

IPS — Internal Pipe Size
SCH — Schedule
SDR — Standard Dimensional Ratio

NOTE: Volume of heat exchanger is approximately 1.0 gallon.

Table 9 — Antifreeze Percentages by Volume

ANTIFREEZE	MINIMUM TEMPERATURE FOR FREEZE PROTECTION (F)			
	10	15	20	25
Methanol (%)	25	21	16	10
100% USP Food Grade Propylene Glycol (%)	38	30	22	15

Cooling Tower/Boiler Systems — These systems typically use a common loop maintained at 60 to 90 F. The use of a closed circuit evaporative cooling tower with a secondary heat exchanger between the tower and the water loop is recommended. If an open type cooling tower is used continuously, chemical treatment and filtering will be necessary.

Ground Coupled, Closed Loop and Plateframe Heat Exchanger Well Systems — These systems allow water temperatures from 30 to 110 F. The external loop field is divided up into 2 in. polyethylene supply and return lines. Each line has valves connected in such a way that upon system start-up, each line can be isolated for flushing using only the system pumps. Air separation should be located in the piping system prior to the fluid re-entering the loop field.

OPERATION

Power Up Mode — The unit will not operate until all the inputs, terminals and safety controls are checked for normal operation.

NOTE: The compressor will have a 5-minute anti-short cycle upon power up.

Units with Aquazone™ Complete C Control — The controller will memorize the last mode used before power is removed and will run in that mode after it is turned on. In all modes the control will display temperature degree differential setting for 5 seconds once it is powered and this setting may be adjusted during this time. Thereafter the display will switch to the monitored water temperature. When switching from one mode to another the set point (the decimal point is used to distinguish it from water temperature) for the new mode is displayed for 5 seconds and then monitored water temperature. During this time the set point may be adjusted.

Off Mode — In the OFF mode all outputs are disabled and mode indication LED's will be off.

The control will first display temperature differential setting with the ability for the user to adjust it and then will display "OFF" and finally water temperature.

Heating Mode — When the unit is operated in the heating mode and the controlled water temperature is below the set point minus the differential setting, terminal Y1 will close and the unit will operate (first stage compressor in a two stage unit). When the set point is satisfied the compressor is turned off.

In a two-stage unit after the first stage activation if the water temperature drops an additional 2 degrees below the set point, the second stage (terminal Y2) will be activated (if control is configured for both compressors). Both stages will be on until the set point is satisfied.

When the unit runs after power is applied or the mode is changed from cooling to heating, if the fluid temperature is below set point and does not change for 3 minutes, the second stage of heating will be activated. This only applies for a two-stage machine.

There will be 5 minutes delay on break after the unit cycles off on temperature, a power interruption or because of a fault condition. See Table 10.

At any point in time the control will ignore a low pressure switch condition for 120 seconds before turning off the compressor.

Table 10 — Fault Codes

BLINK CODE	SINGLE COMPRESSOR SIZES 025-071, 180, AND 210	DUAL COMPRESSOR SIZES 122, 240-420
One Blink	High Pressure	High Pressure 1
Two Blinks	Low Pressure	Low Pressure 1
Three Blinks	Source Side Freeze	High Pressure 2
Four Blinks	Not Used on PSW	Low Pressure 2
Five Blinks	Brown Out	Freeze (Load or Source)
Six Blinks	Load Side Freeze	Not Used on These Sizes
Seven Blinks	Not Used on These Sizes	Brown Out

Cooling Mode — When the unit is operated in the cooling mode and the leaving water temperature is above the temperature set point plus the differential setting, terminals Y1 will close (first-stage compressor of a two-stage unit) and the unit will operate in the cooling mode. When the set point is satisfied the compressor is turned off. The reversing valve is always activated when the unit is in the cooling mode.

On two-stage units, after first stage activation if water temperature increases 2 degrees above the set point, the second stage (terminal Y2) will be activated (if control is configured for both compressors). Both stages will remain on until the set point is satisfied.

When the unit runs after power is applied or the mode is changed from heating to cooling, if the fluid temperature is above cooling point and does not change for 3 minutes, the second stage will be activated. This only applies for a two-stage machine.

There will be 5 minutes delay on break after the unit cycles off on temperature, a power interruption or because of a fault condition.

Retry Mode — In Retry mode, the staus LED will flash the code for the corresponding fault. If the fault clears and the thermostat call (Y) is still present the Complete C or Deluxe D control will run the compressor once the ASC (anti-short cycle) timer has expired and will try to satisfy the call. If the call is satisfied, the unit will resume its normal operation.

If 2 or 4 consecutive faults occur (depending on the DIP switch setting) within 1 hour, the controller will lock the compressor operation out and will flash the alarm code on the status LED as well as alarm dry contact output. When the Complete C or Deluxe D control enters lockout mode, the alarm will also be shown on the panel mounted LED.

SERVICE

Perform the procedures outlined below periodically, as indicated.

IMPORTANT: When a compressor is removed from this unit, system refrigerant circuit oil will remain in the compressor. To avoid leakage of compressor oil, the refrigerant lines of the compressor must be sealed after it is removed.

IMPORTANT: To avoid the release of refrigerant into the atmosphere, the refrigerant circuit of this unit must only be serviced by technicians which meet local, state and federal proficiency requirements.

IMPORTANT: All refrigerant discharged from this unit must be recovered without exception. Technicians must follow industry accepted guidelines and all local, state and federal statutes for the recovery and disposal of refrigerants.

⚠ WARNING

To prevent injury or death due to electrical shock or contact with moving parts, open unit disconnect switch before servicing unit.

Water Coil — Keep all air out of the water coil. Check open loop systems to be sure the well head is not allowing air to infiltrate the water line. Always keep lines airtight.

Inspect heat exchangers regularly, and clean more frequently if the unit is located in a “dirty” environment. The heat exchanger should be kept full of water at all times. Open loop systems should have an inverted P trap placed in the discharge line to keep water in the heat exchanger during off cycles. Closed loop systems must have a minimum of 15 psig during the summer and 40 psig during the winter.

Check P trap frequently for proper operation.

⚠ CAUTION

To avoid fouled machinery and extensive unit clean-up, DO NOT operate units without filters in place. DO NOT use equipment as a temporary heat source during construction.

Refrigerant System — Verify air and water flow rates are at proper levels before servicing. To maintain sealed circuitry integrity, do not install service gages unless unit operation appears abnormal.

Condenser Cleaning — Water-cooled condensers may require cleaning of scale (water deposits) due to improperly maintained closed-loop water systems. Sludge build-up may need to be cleaned in an open water tower system due to induced contaminants.

Local water conditions may cause excessive fouling or pitting of tubes. Condenser tubes should therefore be cleaned at least once a year, or more often if the water is contaminated.

Proper water treatment can minimize tube fouling and pitting. If such conditions are anticipated, water treatment analysis is recommended. Refer to the Carrier System Design Manual, Part 5, for general water conditioning information.

⚠ CAUTION

Follow all safety codes. Wear safety glasses and rubber gloves when using inhibited hydrochloric acid solution. Observe and follow acid manufacturer's instructions.

Clean condensers with an inhibited hydrochloric acid solution. The acid can stain hands and clothing, damage concrete, and, without inhibitor, damage steel. Cover surroundings to guard against splashing. Vapors from vent pipe are not harmful, but take care to prevent liquid from being carried over by the gases.

Warm solution acts faster, but cold solution is just as effective if applied for a longer period.

GRAVITY FLOW METHOD — Do not add solution faster than vent can exhaust the generated gases.

When condenser is full, allow solution to remain overnight, then drain condenser and flush with clean water. Follow acid manufacturer's instructions. See Fig. 14.

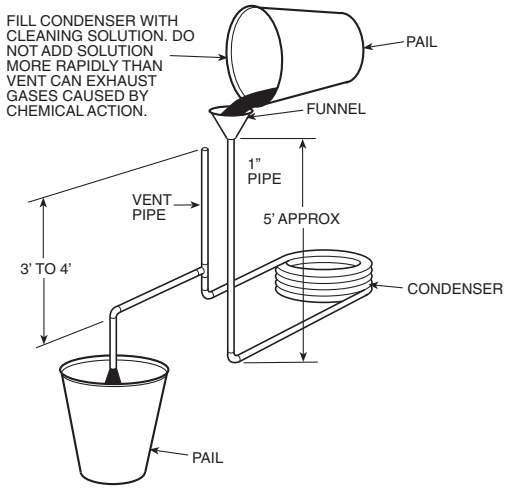

Fig. 14 — Gravity Flow Method

FORCED CIRCULATION METHOD — Fully open vent pipe when filling condenser. The vent may be closed when condenser is full and pump is operating. See Fig. 15.

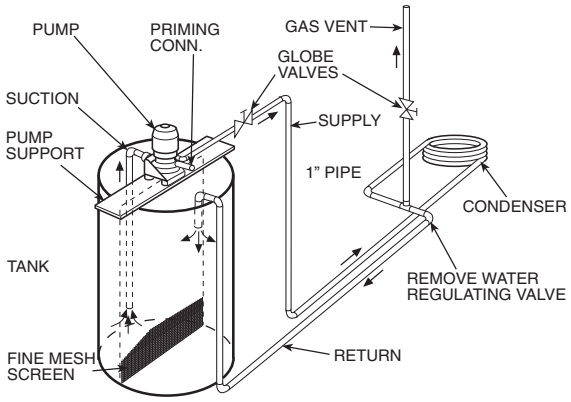

Fig. 15 — Forced Circulation Method

Regulate flow to condenser with a supply line valve. If pump is a nonoverloading type, the valve may be fully closed while pump is running.

For average scale deposit, allow solution to remain in condenser overnight. For heavy scale deposit, allow 24 hours. Drain condenser and flush with clean water. Follow acid manufacturer's instructions.

Checking System Charge — Units are shipped with full operating charge. If recharging is necessary:

1. Insert thermometer bulb in insulating rubber sleeve on liquid line near filter drier. Use a digital thermometer for all temperature measurements. DO NOT use a mercury or dial-type thermometer.
2. Connect pressure gage to discharge line near compressor.
3. After unit conditions have stabilized, read head pressure on discharge line gage.

   NOTE: Operate unit a minimum of 15 minutes before checking charge. From standard field-supplied Pressure-Temperature chart for R-410A, find equivalent saturated condensing temperature.
4. Read liquid line temperature on thermometer; then subtract from saturated condensing temperature. The difference equals subcooling temperature.

Refrigerant Charging

⚠ WARNING

To prevent personal injury, wear safety glasses and gloves when handling refrigerant. Do not overcharge system — this can cause compressor flooding.

NOTE: Do not vent or depressurize unit refrigerant to atmosphere. Remove and recover refrigerant following accepted practices.

TROUBLESHOOTING

When troubleshooting problems with a WSHP, refer to Table 11.

Table 11 — Troubleshooting

FAULT	POSSIBLE CAUSE	SOLUTION
COMPRESSOR DOES NOT OPERATE	Power supply off	Apply power, close disconnect.
	Blown fuse	Replace fuse or reset circuit breaker. Check for correct fuses.
	Broken or loose wires	Replace or tighten the wires. Check for loose or broken wires at compressor, capacitor, or contactor.
	Voltage supply low	If voltage is below minimum voltage specified on unit data plate, contact local power company.
	Controller	Set controller to “COOL” and lowest temperature setting, the unit should run in the cooling mode (reversing valve energized). Set unit to “HEAT” and the highest temperature setting, the unit should run in the heating mode. If the compressor does not run in all cases, the controller could be miswired or faulty.To ensure miswired or faulty thermostat verify 24 volts is available on the unit section low voltage terminal strip between “R” and “C,” “Y” and “C,” and “O” and “C.” Replace the controller if defective.
	Safety controls	Reset the controller to “OFF.” After a few minutes turn to “COOL” or “HEAT.” If the compressor runs, unit was off on one of the safety controls. (See problem for possible causes)
	Compressor overload open	If the compressor is cool and the overload will not reset, replace compressor.
	Compressor motor grounded	Internal winding grounded to the compressor shell. Replace compressor. If compressor burnout, install suction filter drier.
	Compressor windings open	After compressor has cooled, check continuity of the compressor windings. If the windings are open, replace the compressor.
UNIT OFF ON HIGH-PRESSURE SWITCH	Discharge pressure too high	In “COOLING” mode: SOURCE COIL - Lack of or inadequate water flow. Entering water temperature too warm. Scaled or plugged condenser. In “HEATING” mode: LOAD COIL - Lack of or inadequate water flow. Entering water temperature too warm. Scaled or plugged load coil.
	Refrigerant charge	The unit is overcharged with refrigerant. Recover refrigerant, evacuate and recharge with factory recommended charge.
	High-pressure switch	Check for defective or improperly calibrated high-pressure switch.
UNIT OFF ON LOW-PRESSURE SWITCH	Suction pressure too low	In “COOLING” mode: LOAD COIL - Lack of or inadequate fluid flow. Entering water temperature too cold. Scaled or plugged load coil. In “HEATING” mode: SOURCE COIL - Lack of or inadequate fluid flow. Entering water temperature too cold. Scaled or plugged source coil.
	Refrigerant charge	The unit is low on refrigerant. Check for refrigerant leak, repair, evacuate and recharge with factory recommended charge.
	Low-pressure switch	Check for defective or improperly calibrated low-pressure switch.
UNIT SHORT CYCLES	Unit oversized	Recalculate heating and or cooling loads.
	Wiring and controls	Loose connections in the wiring or a defective compressor contactor.
	Fluid Volume	Inadequate load side fluid volume.
INSUFFICIENT COOLING OR HEATING	Unit undersized	Recalculate heating and or cooling loads. If excessive, possibly adding insulation and shading will rectify the problem. Unit may be short of refrigerant.
	Refrigerant charge	Unit may be short on refrigerant charge.
	Compressor	Check for defective compressor. If discharge is too low and suction pressure is too high, compressor is not pumping properly. Replace compressor.
	Reversing valve	Defective reversing valve creating bypass of refrigerant from discharge to suction side of compressor. Replace reversing valve.
	Operating pressures	Compare unit operating pressures to the pressure / temperature chart for the unit.
	TXV	Check TXV (thermostatic expansion valve) for possible restriction or defect. Replace if necessary.
	Moisture, noncondensables	The refrigerant system may be contaminated with moisture or noncondensables. Recover refrigerant, evacuate and recharge with factory recommended charge. Note: a liquid line drier may be required.

© Carrier Corporation 2014

Manufacturer reserves the right to discontinue, or change at any time, specifications or designs without notice and without incurring obligations.

Catalog No. 04-53500103-01 Printed in U.S.A. Form 50PSW-3SI Pg 26 419 8-14 Replaces: NEW

50PSW
START-UP CHECKLIST

CUSTOMER:_____ JOB NAME:

MODEL NO.:_____ SERIAL NO.: _____ DATE:

LOOP TYPE: _____ ANTIFREEZE TYPE AND %:_____

I. PRE-START-UP

DOES THE UNIT VOLTAGE CORRESPOND WITH THE SUPPLY VOLTAGE AVAILABLE? (Y/N) _____

HAVE THE POWER AND CONTROL WIRING CONNECTIONS BEEN MADE AND TERMINALS TIGHT? (Y/N) _____

HAVE WATER CONNECTIONS BEEN MADE AND IS FLUID AVAILABLE AT HEAT EXCHANGER? (Y/N) _____

HAS PUMP BEEN TURNED ON AND ARE ISOLATION VALVES OPEN? (Y/N) _____

HAS CONDENSATE CONNECTION BEEN MADE AND IS A TRAP INSTALLED? (Y/N) _____

IS AN AIR FILTER INSTALLED? (Y/N) _____

II. START-UP

IS FAN OPERATING WHEN COMPRESSOR OPERATES? (Y/N) _____

IF 3-PHASE SCROLL COMPRESSOR IS PRESENT, VERIFY PROPER ROTATION PER INSTRUCTIONS. (Y/N) _____

UNIT VOLTAGE — COOLING OPERATION

PHASE AB VOLTS_____ PHASE BC VOLTS _____ (if 3 phase) PHASE CA VOLTS _____ (if 3 phase)

PHASE AB AMPS_____ PHASE BC AMPS _____ (if 3 phase) PHASE CA AMPS _____ (if 3 phase)

CONTROL VOLTAGE

IS CONTROL VOLTAGE ABOVE 21.6 VOLTS? (Y/N) _____.
IF NOT, CHECK FOR PROPER TRANSFORMER CONNECTION.

TEMPERATURES

FILL IN THE ANALYSIS CHART ATTACHED.

COAXIAL HEAT EXCHANGER	COOLING CYCLE: FLUID IN	_____	F	FLUID OUT	_____	F	_____	PSI	_____ FLOW
	HEATING CYCLE: FLUID IN	_____	F	FLUID OUT	_____	F	_____	PSI	_____ FLOW
AIR COIL	COOLING CYCLE: AIR IN	_____	F	AIR OUT	_____	F			
	HEATING CYCLE: AIR IN	_____	F	AIR OUT	_____	F			

Manufacturer reserves the right to discontinue, or change at any time, specifications or designs without notice and without incurring obligations.
Catalog No. 04-53500103-01 Printed in U.S.A. Form 50PSW-3SI CL-1 419 8-14 Replaces: NEW

HEATING AND COOLING CYCLE ANALYSIS

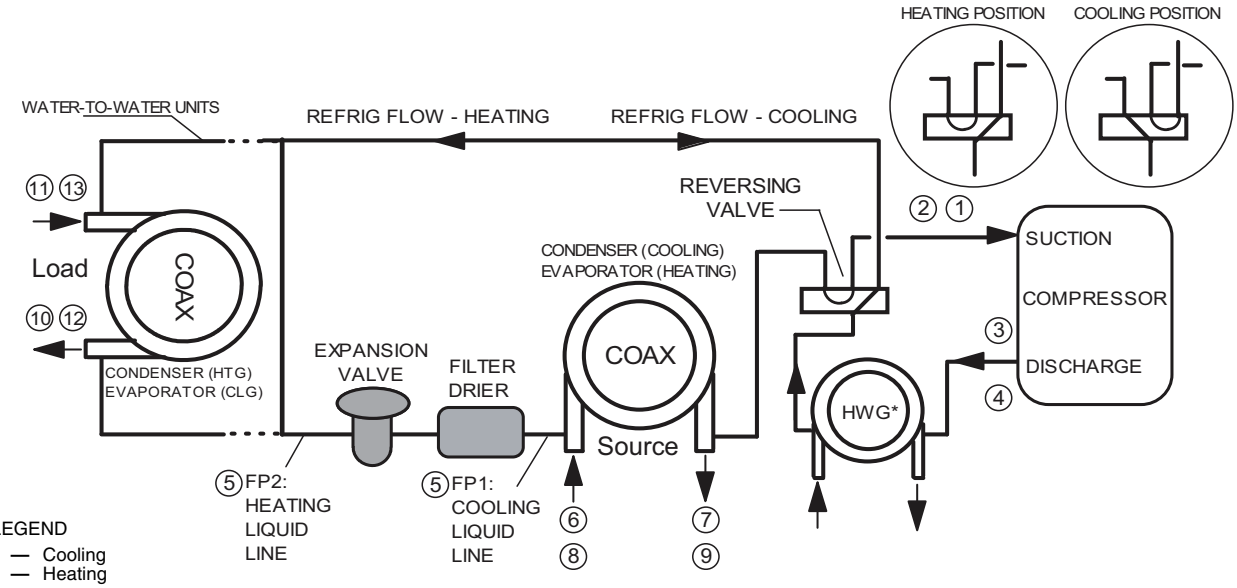

*Turn off HWG (hot water generator) before troubleshooting.

	DESCRIPTION	HEATING	COOLING	NOTES
	Voltage			
	Compressor Amp			
1	Suction Temperature			
2	Suction Pressure			
2a	Saturation Temperature			
2b	Superheat			
3	Discharge Temperature			
4	Discharge Pressure			
4a	Saturation Temperature			
4b	Subcooling			
5	Liquid Line Temperature			
6	Source Water In Temperature			
7	Source Water Out Temperature			Temperature Difference —
8	Source Water In Pressure			
9	Source Water Out Pressure			
9a	Pressure Drop			
9b	Flow Rate (gpm)			
10	Load Water In Temperature			
11	Load Water Out Temperature			Temperature Difference —
12	Load Water In Pressure			
13	Load Water Out Pressure			
13a	Pressure Drop			
13b	Flow Rate (gpm)			

HEAT OF EXTRACTION (ABSORPTION) OR HEAT OF REJECTION =

_____ FLOW RATE (GPM) x _____ TEMP. DIFF. (DEG. F) x _____ FLUID FACTOR* = _____ (Btu/hr)

SUPERHEAT = SUCTION TEMPERATURE – SUCTION SATURATION TEMPERATURE
= ____ (DEG F)

SUBCOOLING = DISCHARGE SATURATION TEMPERATURE – LIQUID LINE TEMPERATURE
= ____ (DEG F)

*Use 500 for water, 485 for antifreeze.

CUT ALONG DOTTED LINE

CUT ALONG DOTTED LINE

© Carrier Corporation 2014

Manufacturer reserves the right to discontinue, or change at any time, specifications or designs without notice and without incurring obligations.

Catalog No. 04-53500103-01 Printed in U.S.A. Form 50PSW-3SI CL-2 419 8-14 Replaces: NEW