Carrier

Aquazone™ 50HQP,VQP 072-360 Large Capacity Water Source Heat Pumps with Puron Advance™ (R-454B) Refrigerant

Installation, Start-Up, and Service Instructions

CONTENTS

Page

GENERAL 2
SAFETY CONSIDERATIONS 2
PRE-INSTALLATION 3
Inspection 3
Storage 3
INSTALLATION 3
Step 1 — Check Jobsite 3
- HORIZONTAL UNITS (50HQP)
- VERTICAL UNITS (50VQP)
- MINIMUM REQUIRED AREA FOR UNIT INSTALLATION
- INSTALLATION GUIDELINES (ALL UNITS)

Step 2 — Check Unit 29
- INSPECT UNIT

Step 3 — Locate Unit 29
- PROTECTION
- TAKE APART CONSTRUCTION ASSEMBLY
- DISASSEMBLY INSTRUCTION
- ASSEMBLY INSTRUCTION

Step 4 — Mount the Unit 31
- MOUNTING VERTICAL UNITS
- MOUNTING HORIZONTAL UNITS

Step 5 — Check Duct System 31
- DUCT STATIC PRESSURE PROBE AND TUBING (VAV UNITS ONLY)
- DUCT HIGH-STATIC (DHS) LIMIT SWITCH (VAV ONLY)

Step 6 — Install Condensate Drain 32
Step 7 — Pipe Connections 33
- WATER QUALITY GUIDELINES
- INSTALLING SUPPLY AND RETURN HOSE KIT
- UNITS WITH WATERSIDE ECONOMIZER
- UNITS WITH BOILERLESS HEAT CONTROL
- UNITS WITH HOT WATER COIL

Step 8 — Wire Field Power Supply 36
- HIGH VOLTAGE WIRING
- CONTROL TRANSFORMER SETTING FOR 208V UNITS
- 50HQP WITH SUPPLY FAN VFD

Step 9 — Low Voltage Controls Wiring 54
- THERMOSTAT AND DDC SENSORS

Additional Controls Options Wiring 55
- PUMP RELAY
- ENERGY MANAGEMENT SWITCH
- BOILERLESS HEAT CONTROL
- ALARM OUTPUT (ALL UNITS)
- CONDENSERLESS (FOR UNITS WITH FIELD PROVIDED REMOTE CONDENSER)
- HOT WATER COIL (HWC)
- TRUVU™ DDC CONTROLLER
- SCU OPEN CONTROLLER (VAV UNITS ONLY)
- CONTROL TRANSFORMER
- SAV VFD FIELD CONTROL WIRING (50HQP UNITS ONLY)

Step 10 — Configure Unit Control Components . . . 56
- UNIT PROTECTION MODULE (UPM)
- UPM STANDARD SAFETIES AND ALARMS
- WATER SIDE ECONOMIZER OPTION
- BOILERLESS HEAT CONTROL
- VARIABLE FREQUENCY DRIVE PARAMETERS (VAV UNITS)

PRE-START-UP 62
System Checkout 62
- CLEAN AIR COIL

Blower Drive Assembly 62
Fan Sheaves 62
- ALIGNMENT

Evaporator Fan Performance Adjustment (no VFD units only) 63
- BELT TENSION ADJUSTMENT

System Flushing and Filling 63
System Flow 65
- FLOW VERIFICATION
- FLOW REGULATION
- ANTIFREEZE
- FREEZE PROTECTION SELECTION
- START-UP

Operating Limits 66
- ENVIRONMENT
- POWER SUPPLY
- UNIT STARTING CONDITIONS

START UP PROCEDURE 66
- SCROLL COMPRESSOR ROTATION

Blower Performance 70
OPERATION 74
Power Up Mode 74
Unit Protection Module (UPM) 74
Sequence of Operation of Constant Volume (CV)/ Staged Air Volume (SAV) Units without DDC Controller 74
- STANDBY
- COOLING
- HEATING STAGE 1
- HEATING STAGE 2
- LOCKOUT MODE
- HOT GAS REHEAT (OPTIONAL)
- WATERSIDE ECONOMIZER (OPTIONAL)
- BOILERLESS HEAT (OPTIONAL)

Manufacturer reserves the right to discontinue, or change at any time, specifications or designs without notice and without incurring obligations.

- PUMP/VALVE RELAY (OPTIONAL)
- REFRIGERANT LEAK DETECTION SYSTEM
- COMPRESSOR STATUS RELAY (OPTIONAL)

Sequence of Operation for Units with TruVu™ DDC Controller 76
- SCHEDULING
- INDOOR FAN
- COOLING OPERATION
- HEATING OPERATION
- WATERSIDE ECONOMIZER
- INDOOR AIR QUALITY (IAQ) AND DEMAND CONTROL VENTILATION (DCV)
- COMPRESSOR STATUS
- DEMAND LIMITING
- REMOTE DISABLE
- ALARMS

Sequence of Operation for Units with SCU Open Controller (VAV Units ONLY) 82

SERVICE 82
- JOBSITE CHECK

Filters 82

Water Coil 82

Condensate Drain Pans 83

Refrigerant System 83

Refrigerating Equipment 83

Detection of Flammable Refrigerants 83

Compressor 83

Fan Motor Lubrication 83

Fan Bearing Lubrication 83

Condensate Drain Cleaning 83

Air Coil Cleaning 83

Condenser Cleaning 83
- GRAVITY FLOW METHOD
- FORCED CIRCULATION METHOD

Checking System Charge 84

Refrigerant Charging 84
- CHARGING PROCEDURES
- RECOVERY
- REMOVAL AND EVACUATION

Air Coil Fan Motor Removal 85

TROUBLESHOOTING 85
- UNIT PROTECTION MODULE (UPM)

Thermostatic Expansion Valves 85
- TXV FAILURE

GENERAL

This Installation and Start-Up Instructions literature is for Aquazone™ water source heat pump systems.

Water source heat pumps (WSHPs) are single-package vertically or horizontally mounted units with a reversible refrigeration cycle for year-round cooling and heating.

IMPORTANT: Read the entire instruction manual before starting installation.

IMPORTANT: This manual applies to units with R-454B refrigerant only as designated by a ‘C’ in the 13th digit of the model number (see Fig. 1). For units using R-410A, which have an ‘A’ or ‘B’ in this digit, refer to 50HQP-VQP-7SI.

SAFETY CONSIDERATIONS

Installation and servicing of air-conditioning equipment can be hazardous due to system pressure and electrical components. Only trained and qualified service personnel should install, repair, or service air-conditioning equipment.

Untrained personnel can perform basic maintenance functions of cleaning coils and filters and replacing filters. All other operations should be performed by trained service personnel. When working on air-conditioning equipment, observe precautions in the literature, tags and labels attached to the unit, and other safety precautions that may apply.

Improper installation, adjustment, alteration, service, maintenance, or use can cause explosion, fire, electrical shock or other conditions which may cause personal injury or property damage. Consult a qualified installer, service agency, or your distributor or branch for information or assistance. The qualified installer or agency must use factory-authorized kits or accessories when servicing or repairing this product. Refer to the individual instructions packaged with the kits or accessories when installing.

Follow all safety codes. Wear safety glasses and work gloves. Use quenching cloth for brazing operations. Have fire extinguisher available. Read these instructions thoroughly and follow all warnings or cautions attached to the unit. Consult local building codes and the National Electrical Code (NEC) for special installation requirements.

Understand the signal words — DANGER, WARNING, and CAUTION. DANGER identifies the most serious hazards which will result in severe personal injury or death. WARNING signifies hazards that could result in personal injury or death. CAUTION is used to identify unsafe practices, which would result in minor personal injury or product and property damage.

It is important to recognize safety information. These are the safety alert symbols. When you see these symbols on the unit and in instructions or manuals, be alert to the potential for personal injury.

Refrigerant Safety Group
A2L

IMPORTANT: The installation of water source heat pump units and all associated components, parts, and accessories which make up the installation shall be in accordance with the regulations of ALL authorities having jurisdiction and MUST conform to all applicable codes. It is the responsibility of the installing contractor to determine and comply with ALL applicable codes and regulations.

⚠ WARNING

WARNING: RISK OF FIRE

Flammable Refrigerant Used — Dispose of properly in accordance with federal or local regulations.

⚠ WARNING

WARNING: RISK OF FIRE

Flammable Refrigerant Used — To be repaired only by trained service personnel. DO NOT puncture refrigerant tubing.

⚠ WARNING

The appliance shall be stored in a room without continuously operating ignition sources (for example: open flames, an operating gas appliance or an operating electric heater).

⚠ WARNING

Do not pierce or burn refrigerant lines. Be aware that the refrigerants may not contain an odor.

⚠ WARNING

Auxiliary devices which may be a POTENTIAL IGNITION SOURCE shall not be installed in the duct work. Examples of such POTENTIAL IGNITION SOURCES are hot surfaces with a temperature exceeding 700°C and electric switching devices.

⚠ WARNING

Do not use means to accelerate the defrosting process or to clean, unless recommended in these instructions.

⚠ WARNING

Electrical shock can cause personal injury and death. Shut off all power to this equipment during installation and service. There may be more than one disconnect switch. Tag all disconnect locations to alert others not to restore power until work is completed.

PRE-INSTALLATION

Inspection

Upon receipt of shipment, carefully check the shipment against the bill of lading. Make sure all units have been received. Inspect the carton or crating of each unit, and inspect each unit for damage on both the interior and exterior. Ensure the shipping company makes proper notation of any shortages or damage on all copies of the freight bill. Concealed damage not discovered during unloading must be reported to the shipping company within 5 days of receipt of shipment.

NOTE: It is the responsibility of the purchaser to file all necessary claims with the shipping company.

Storage

⚠ CAUTION

EQUIPMENT DAMAGE HAZARD

DO NOT store or install units in corrosive environments or in locations subject to temperature or humidity extremes (e.g., attics, garages, rooftops, etc.). Corrosive conditions and high temperature or humidity can significantly reduce performance, reliability, and service life. Always move units in an upright position. Tilting units on their sides may cause equipment damage.

If the equipment is not needed for immediate installation upon its arrival at the job site, it should be left in its shipping carton and stored in a clean, dry area between 50°F and 95°F. Units must only be stored or moved in the normal upright position as indicated by the UP arrows on each carton at all times. DO NOT STACK UNITS.

INSTALLATION

Step 1 — Check Jobsite

Installation, operation and maintenance instructions are provided with each unit. Before unit start-up, read all manuals and become familiar with the unit and its operation. Thoroughly check out the system before operation. Complete the inspections and instructions listed below to prepare a unit for installation. See Table 2 for unit physical data.

HORIZONTAL UNITS (50HQP)

Horizontal units are designed for indoor installation only. See Fig. 22 on page 29 for the field-installed VFD shipping location. See Fig. 2 and 3 for overall unit dimensions. See Fig. 7-13 for units with Economizer. Be sure to allow adequate space around the unit for installation and servicing. See Fig. 19 for service clearance requirements.

VERTICAL UNITS (50VQP)

Vertical units are designed for indoor installations only. Vertical units are typically installed in a floor-level mechanical room or in the occupied space. See Fig 4-6 for unit dimensions. See Fig. 14-18 for units with Economizer. Be sure to allow adequate space around the unit for installation and servicing. See Fig. 19 for service clearance requirements. See Fig. 20 and 21 for take apart construction units.

⚠ CAUTION

EQUIPMENT DAMAGE HAZARD

To avoid equipment damage, do not use these units as a source of heating or cooling during the construction process. The mechanical components and filters used in these units quickly become clogged with construction dirt and debris which may cause system damage.

MINIMUM REQUIRED AREA FOR UNIT INSTALLATION

This requirement specifically applies to units utilizing A2L refrigerants with refrigerant charge exceeding 62 oz. per refrigerant circuit. It is imperative to adhere strictly to the guidelines outlined in the UL 60335-2-40 standard, ensuring both adequate space allocation and minimum airflow rate to facilitate safe installation and maintenance of the unit. The standard specifies minimum installation area, minimum circulation airflow rate and/or ventilation airflow requirements, and restricts the use of ignition sources in ductwork and spaces. Additionally, the standard may require a refrigerant leak detection system provided with the unit. For equipment using R-454B refrigerant with charge amounts of 64 oz. or less per circuit, UL 60335-2-40 does not require an installation area limit, or refrigerant leak detection system, circulation airflow, or ventilation airflow mitigation strategies. 50HQP/50VQP unit's fan(s) is activated during a refrigerant leak event and meets the minimum required airflow rate outlined in Table 1.

Table 1 — Minimum Required Area for Installation

UNIT SIZE	CONFIGURATION	TOTAL REFRIGERATION CHARGE in. oz (kg)	REFRIGERATION CHARGE PER CIRCUIT in. oz (kg)	CEILING HEIGHT ft (m)					MIN CFM[a] (m^3/hr)
				7.2[b] (2.2)	8 (2.4)	9 (2.7)	10 (3.0)	12 (3.7)	
				Minimum Area of the Total Conditioned Space ft^2 (m^2)					
072	Horizontal	140	70	258.1	232.8	207.0	186.3	155.2	233
		(4.0)	(2.0)	(24.0)	(21.6)	(19.2)	(17.3)	(14.4)	(396)
	Vertical	136	68	250.7	226.2	201.0	180.9	150.8	226
		(3.9)	(1.9)	(23.3)	(21.0)	(18.7)	(16.8)	(14.0)	(384)
096	Horizontal - Cu	166	83	306.0	276.1	245.4	220.9	184.0	276
		(4.7)	(2.4)	(28.4)	(25.6)	(22.8)	(20.5)	(17.1)	(469)
	Horizontal - CuNi	148	74	272.8	246.1	218.8	196.9	164.1	246
		(4.2)	(2.1)	(25.3)	(22.9)	(20.3)	(18.3)	(15.2)	(418)
	Vertical - Cu	154	77	283.9	256.1	227.7	204.9	170.7	256
		(4.4)	(2.2)	(26.4)	(23.8)	(21.1)	(19.0)	(15.9)	(435)
	Vertical - CuNi	148	74	272.8	246.1	218.8	196.9	164.1	246
		(4.2)	(2.1)	(25.3)	(22.9)	(20.3)	(18.3)	(15.2)	(418)
120	Horizontal	154	77	283.9	256.1	227.7	204.9	170.7	256
		(4.4)	(2.2)	(26.4)	(23.8)	(21.1)	(19.0)	(15.9)	(435)
	Vertical	154	77	283.9	256.1	227.7	204.9	170.7	256
		(4.4)	(2.2)	(26.4)	(23.8)	(21.1)	(19.0)	(15.9)	(435)
150	Horizontal	208	104	383.4	345.9	307.5	276.7	230.6	346
		(5.9)	(2.9)	(35.6)	(32.1)	(28.6)	(25.7)	(21.4)	(588)
151	Vertical	198	99	365.0	329.3	292.7	263.4	219.5	329
		(5.6)	(2.8)	(33.9)	(30.6)	(27.2)	(24.5)	(20.4)	(559)
180	Horizontal	234	117	431.3	389.2	345.9	311.3	259.4	389
		(6.6)	(3.3)	(40.1)	(36.2)	(32.1)	(28.9)	(24.1)	(661)
181	Vertical	226	113	416.6	375.8	334.1	300.7	250.6	376
		(6.4)	(3.2)	(38.7)	(34.9)	(31.0)	(27.9)	(23.3)	(639)
210	Vertical	282	141	519.8	469.0	416.9	375.2	312.7	469
		(8.0)	(4.0)	(48.3)	(43.6)	(38.7)	(34.9)	(29.0)	(797)
240	Vertical	292	146	538.2	485.6	431.7	388.5	323.7	486
		(8.3)	(4.1)	(50.0)	(45.1)	(40.1)	(36.1)	(30.1)	(825)
242	Horizontal	292	146	538.2	485.6	431.7	388.5	323.7	486
		(8.3)	(4.1)	(50.0)	(45.1)	(40.1)	(36.1)	(30.1)	(825)
300	Vertical	292	146	538.2	485.6	431.7	388.5	323.7	486
		(8.3)	(4.1)	(50.0)	(45.1)	(40.1)	(36.1)	(30.1)	(825)
360	Vertical	494	247	910.6	821.5	730.3	657.2	547.7	822
		(14.0)	(7.0)	(84.6)	(76.3)	(67.8)	(61.1)	(50.9)	(1396)

NOTE(S):

a. Minimum CFM of a unit that requires a blower for migration mode.
b. The minimum height of the room is 7.2 feet (2.2 m).

1	2	3	4	5	6	7	8	9	10	11	12	13	14	15	16
5	0	V	Q	P	0	7	2	B	A	C	3	C	1	A	X

Model Series (1-2)
50 = Packaged WSHP Unit

Configuration (3)
V = Vertical
H = Horizontal

Unit Type (4-5)
QP = Single piece

Nominal Capacity MBH (6-8)
072 = 72 (6 tons)
096 = 96 (8 tons)
120 = 120 (10 tons)
150 = 150 (12.5 tons)
151 = 150 (12.5 tons)
180 = 180 (15 tons)
181 = 180 (15 tons)
210 = 210 (17.5 tons)
240 = 240 (20 tons)
242 = 240 (20 tons)
300 = 300 (25 tons)
360 = 360 (30 tons)

Airflow Configuration (9)

DESCRIPTION	HQP	VQP
Front Return, Rear Discharge	—	Z
Front Return, Top Discharge	—	F
Front Return, Top Discharge, BLR Rotated	—	G
Front Return, Top Discharge, BLR and MTR Rotated	—	H
Rear Return, Front Discharge	—	S
Rear Return, Top Discharge	—	B
Rear Return, Top Discharge, 180° BLR Rotated	—	C
Rear Return, Top Discharge, 180° BLR and MTR Rotated	—	D
Right Return, Left Discharge	J	—
Left Return, Right Discharge	N	—
Left Return, Back Discharge	P	—

Controls — Option / VFD wiring (10)
A = UPM / SAV (2 speed)
B = UPM + Boilerless E-heat (BE) / SAV (2 speed)
V = UPM + TV DDC /SAV (3 speed)
E = UPM + SCU Open, VAV (duct static pressure control)[a,c]
F = UPM + Compressor Status Relays (SR) / SAV (2 speed)
G = UPM + Pump Relay (PR) / SAV (2 speed)
H = UPM + EMS / SAV (2 speed)
J = UPM + BE + PR / SAV (2 speed)
K = UPM + BE + SR / SAV (2 speed)
L = UPM + BE + SR + PR / SAV (2 speed)
M = UPM + SR + PR / SAV (2 speed)
N = UPM + EMS + SR / SAV (2 speed)
P = UPM + EMS + PR / SAV (2 speed)
Q = UPM + EMS + SR + PR / SAV (2 speed)
R = UPM + EMS + BE / SAV (2 speed)
S = UPM + EMS + BE + SR / SAV (2 speed)
T = UPM + EMS + BE + PR / SAV (2 speed)
U = UPM + EMS + BE + PR + SR / SAV (2 speed)

SEE NEXT PAGE FOR REMAINDER OF MODEL NOMENCLATURE

Fig. 1 — Model Number Nomenclature

1	2	3	4	5	6	7	8	9	10	11	12	13	14	15	16
5	0	V	Q	P	0	7	2	B	A	C	3	C	1	A	X

Model Series (1-2)
50 = Packaged WSHP Unit

Blower Motor Options (16)
X = 1 HP Belt Drive
Z = 1.5 HP Belt Drive
B = 2 HP Belt Drive
P = 2 HP Belt Drive w/ VFD
V = 3 HP Belt Drive w/ VFD
M = 5 HP Belt Drive w/ VFD

Sound, IAQ, TAC (15)
A = None
B = Take Apart Construction (TAC)
D = Closed Cell Foam Insulation (CCF)
J = MP (Mute Package)
F = MP + TAC
H = CCF + TAC
L = MP + CCF + TAC
M = MP + TAC
T = 4 sided 2" FR with 1" MERV 5
U = FR + MP
X = FR + CCF
Y = FR + MP + CCF
3 = FR + TAC
4 = FR + MP + TAC
7 = FR + CCF + TAC
8 = FR + MP + CCF + TAC

SEE PREVIOUS PAGE FOR REMAINDER OF MODEL NOMENCLATURE

Additional Options (14)
1 = None
A = Cooling Only (CO)
B = Condenserless (CL)
C = Hot Water Coil (HWC)
D = CO + HWC
E = CO + CL
F = CL + HWC
G = CO + CL + HWC

Revision (13)[b]
C = R-454B (All Sizes)

Electrical Options (12)
3 = 208/230-1-60
5 = 208/230-3-60
6 = 460-3-60

Refrigerant Circuit Options (11)

OPTION	NON-COATED AIR		COATED AIR	
	Cu Water Coil	CuNi Water Coil	Cu Water Coil	CuNi Water Coil
None	C	N	A	J
Hot Gas Reheat (HGRH)	E	P	D	F
Hot Gas Bypass (HGBP)	T	S	U	W
Water Side Economizer (WSE)	B	G	H	K
HGRH + HGBP	L	M	R	V
HGRH + WSE	7	8	9	Q
HGBP + WSE	Y	Z	5	6
HGRH + HGBP + WSE	1	2	3	4

NOTE(S):
a. SCU Open controller is available only for Cooling only units (Position 14). VAV units must be selected with HGRH and HGBP option (nomenclature Position 11).
b. Units with Revision A or B, refer to 50HQP-VQP-14PD for nomenclature break down and available options.
c. VAV units utilize face split air coils and should not be operated below 50% of the rated air flow to prevent coil freezing.

LEGEND

BE — Boilerless Electric Heat
BLR — Blower
CCF — Closed-Cell Foam Insulation
CL — Condenserless
CO — Cooling Only
CuNi — Cupronickel Water Coil
EMS — Energy Management Switch
FR — Filter Rack
HWC — Hot Water Coil
HGBP — Hot Gas Bypass
HGRH — Hot Gas Reheat
MP — Mute Package
MTR — Motor
PR — Pump Relay
SAV — Stages Air Volume
SR — Compressor Status Relay
TAC — Take Apart Construction
TV DDC — TruVu™ Direct Digital Controller
UPM — Unit Protection Module
VFD — Variable Frequency Drive
WSE — Waterside Economizer
WSHP — Water Source Heat Pump

Fig. 1 — Model Number Nomenclature (cont)

Table 2 — 50HQP and 50VQP Unit Physical Data

50HQP,VQP UNIT SIZE	072	096		120	150	151	180
	Cu/CuNi	Cu	CuNi	Cu/CuNi	Cu/CuNi	Cu/CuNi	Cu/CuNi
Compressor Type (Qty 2)	Scroll	Scroll		Scroll	Scroll	Scroll	Scroll
Max Water Working Pressure (psig / kPa)	450 / 3100	450 / 3100		450 / 3100	450 / 3100	450 / 3100	450 / 3100
Number of Refrigeration Circuits	2	2		2	2	2	2
Water Coil Connection (Size / Type)	1" / FPT	1" / FPT		1-1/4" / FPT (Horizontal) 1-1/2" / FPT (Vertical)	1-1/2" / FPT	1-1/2" / FPT	1-1/2" / FPT
Water Coil Type	Coaxial	Coaxial		Coaxial	Coaxial	Coaxial	Coaxial
Coil Volume (gal)	0.64	0.64		0.87	1.06	1.06	1.06
Economizer Option Supply Water Connection (Size / Type)[a]	2" / FPT	2" / FPT		2" / FPT	2" / FPT	2" / FPT	2" / FPT
Vertical Cabinet							
Coil Type	Tube-Fin	Tube-Fin		Tube-Fin	—	Tube-Fin	—
Air Coil Dimensions Vertical (H x L) (in.)	20 x 32.5 (2)	20 x 32.5 (2)		20 x 32.5 (2)	—	24 x 43 (2)	—
Row(s)	3	3		3	—	3	—
Nominal Size of Standard Filter - 1" (H x L) (in.)	20 x 34.5 (2)	20 x 34.5 (2)		20 x 34.5 (2)	—	24 x 24 (4)	—
Standard Fan Motor (hp)	1.0	1.5		2.0	—	3.0	—
Blower Wheel Size (Dia. x W x Qty) (in.)	12 x 12 x 1	12 x 12 x 1		15 x 15 x 1	—	15 x 15 x 1	—
Refrigeration Charge/Circuit (oz)	68	77	74	77	—	99	—
Total Refrigerant Charge (oz)	136	154	148	154	—	198	—
Weight - Operating (lb)	670	702		935	—	1050	—
Weight - Shipping (lb)	715	752		980	—	1140	—
Horizontal Cabinet							
Coil Type	Tube-Fin	Tube-Fin		Tube-Fin	Tube-Fin	—	Tube-Fin
Air Coil Dimensions Horizontal (H x L) (in.)	20 x 32.5 (2)	20 x 32.5 (2)		20 x 32.5 (2)	24 x 65	—	24 x 65
Nominal Size of Standard Filter - 1" (H x L) (in.)	20 x 34.5 (2)	20 x 34.5 (2)		20 x 34.5 (2)	24 x 34 (2)	—	24 x 34 (2)
Row(s)	3	3		3	3	—	3
Standard Fan Motor (hp)	1	2		3	3	—	2
Blower Wheel Size (Dia. x W x Qty) (in.)	12 x 12 x 1	12 x 12 x 1		12 x 9 x 2	15 x 15 x 1	—	12 x 12 x 2
Refrigeration Charge/Circuit (oz)	70	83	74	77	104	—	117
Total Refrigerant Charge (oz)	140	166	148	154	208	—	234
Weight - Operating (lb)	670	702		935	1060	—	1530
Weight - Shipping (lb)	715	752		980	1150	—	1620

NOTE(S):

a. For return water connection size refer to drawings with waterside economizer option.

Table 2 — 50HQP and 50VQP Unit Physical Data (cont)

50HQP,VQP UNIT SIZE	181	210	240	242	300	360
	Cu/CuNi	Cu/CuNi	Cu/CuNi	Cu/CuNi	Cu/CuNi	Cu/CuNi
Compressor Type (Qty 2)	Scroll	Scroll	Scroll	Scroll	Scroll	Scroll
Max Water Working Pressure (psig / kPa)	450 / 3100	450 / 3100	450 / 3100	450 / 3100	450 / 3100	450 / 3100
Number of Refrigeration Circuits	2	2	2	2	2	2
Water Coil Connection (Size / Type)	1-1/2" / FPT	2" / FPT	2" / FPT	2" / FPT	2" / FPT	2" / FPT
Water Coil Type	Coaxial	Coaxial	Coaxial	Coaxial	Coaxial	Coaxial
Coil Volume (gal)	1.06	3.04	3.40	3.40	3.40	3.31
Economizer Option Supply Water Connection (Size / Type)[a]	2" / FPT	2" / FPT	2" / FPT	2" / FPT	2" / FPT	2" / FPT
Vertical Cabinet						
Coil Type	Tube-Fin	Tube-Fin	Tube-Fin	—	Tube-Fin	Tube-Fin
Air Coil Dimensions Vertical (H x L) (in.)	24 x 43 (2)	20 x 32.5 (4)	20 x 32.5 (4)	—	20 x 32.5 (4)	30 x 32.5 (2)
Row(s)	3	3	3	—	3	3
Nominal size of Standard Filter - 1" (H x L) (in.)	24 x 24 (4)	20 x 34.5 (4)	20 x 34.5 (4)	—	20 x 34.5 (4)	30 x 34.5 (4)
Standard Fan Motor (hp)	5.0	1.5	2.0	—	3.0	5.0
Blower Wheel Size (Dia. x W x Qty) (in.)	15 x 15 x 1	15 x 15 x 2	15 x 15 x 2	—	15 x 15 x 2	15 x 15 x 2
Refrigeration Charge/Circuit (oz)	113	141	146	—	146	247
Total Refrigerant Charge (oz)	226	282	292	—	292	494
Weight - Operating (lb)	1090	1090	1310	—	1530	1650
Weight - Shipping (lb)	1180	1180	1400	—	1630	1750
Horizontal Cabinet						
Coil Type	—	—	—	Tube-Fin	—	—
Air Coil Dimensions Horizontal (H x L) (in.)	—	—	—	34 x 65	—	—
Nominal Size of Standard Filter - 1" (H x L) (in.)	—	—	—	20 x 34.5 (4)	—	—
Row(s)	—	—	—	3	—	—
Standard Fan Motor (hp)	—	—	—	2	—	—
Blower Wheel Size (Dia. x W x Qty) (in.)	—	—	—	15 x 15 x 2	—	—
Refrigeration Charge / Circuit (oz)	—	—	—	146	—	—
Total Refrigerant Charge (oz)	—	—	—	292	—	—
Weight - Operating (lb)	—	—	—	1655	—	—
Weight - Shipping (lb)	—	—	—	1755	—	—

NOTE(S):

a. For return water connection size refer to drawings with waterside economizer option.

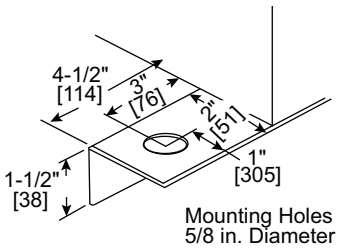

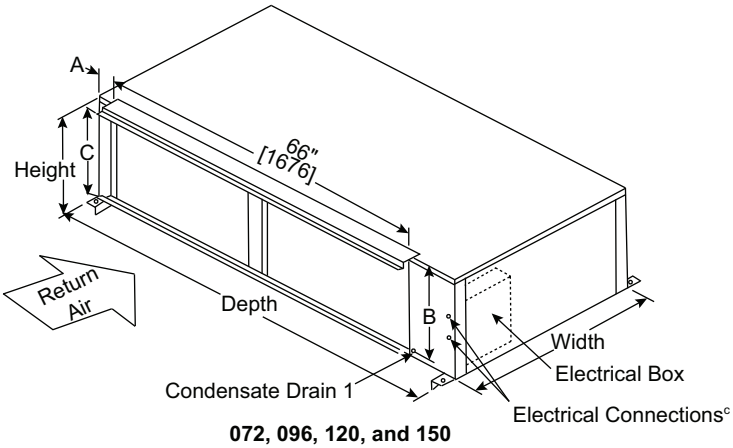

072, 096, 120, and 150
Left Return, Right Discharge

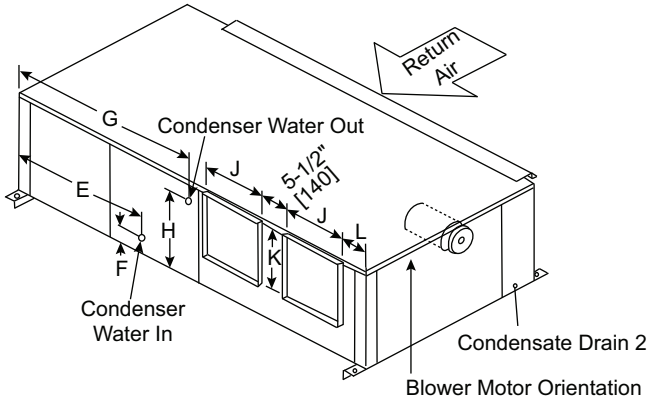

120
Left Return, Right Discharge

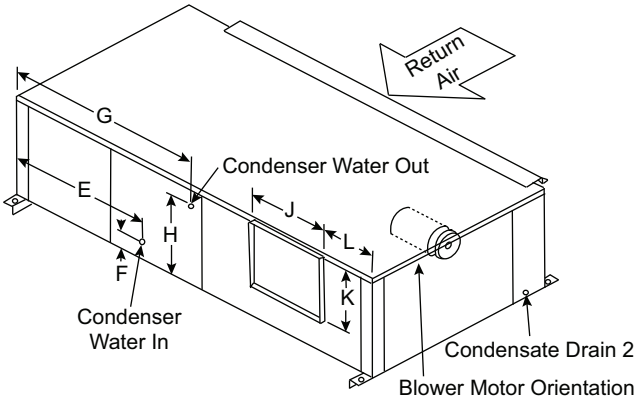

072, 096, and 150
Left Return, Right Discharge

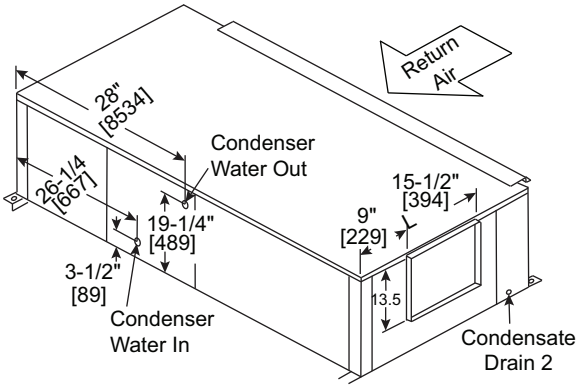

072 and 096
Left Return, Back Discharge

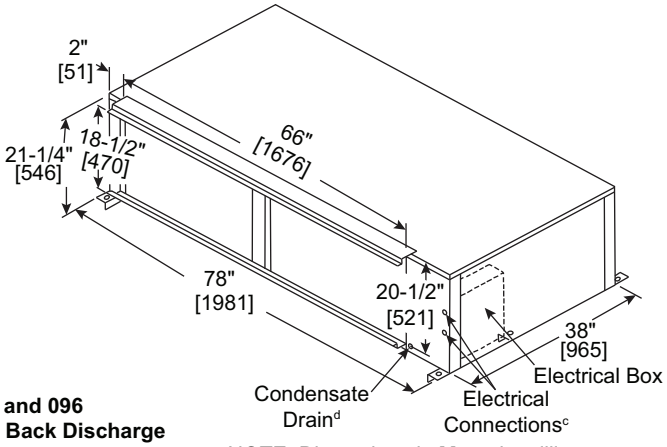

NOTE: Dimensions in [ ] are in millimeters.

50HQP UNIT SIZE	HEIGHT[a]	WIDTH	DEPTH[b]	RETURN AIR			CONDENSER WATER CONNECTIONS					SUPPLY AIR (Blower Outlets)			REPLACEMENT FILTER SIZE (NOMINAL)
				A	B	C	E	F	G	H	DIAMETER (FPT)	J	K	L	
072	21.50	38.00	78.00	2.00	20.50	18.50	28.00	3.50	28.00	15.25	1.0	15.50	13.50	10.50	20 x 34-1/2 x 1 (2 per unit)
096	21.50	38.00	78.00	2.00	20.50	18.50	28.00	3.50	28.00	15.25	1.0	15.50	13.50	10.50	
120	21.50	38.00	78.00	2.00	20.50	18.50	27.00	3.00	27.00	15.25	1.25	12.50	13.50	5.25	
150	25.50	42.00	82.00	2.00	20.50	18.50	24.00	3.25	24.00	17.50	1.50	18.50	16.00	14.00	24 x 34 x 1 (2 per unit)

NOTE(S):

a. All dimensions in inches unless otherwise noted. All dimensions within ± 0.125-in. Specifications subject to change without notice. Condensate connections are 0.75 in. FPT on sizes 072-150.
b. When TruVu™ DDC controller is installed increase depth by 3.00 inches.
c. Front of the unit is considered as the side with electrical connections.
d. Distance from condensate drain center line to the bottom of the unit is 1-1/4 inches.

Fig. 2 — 50HQP072-150 Unit Dimensions

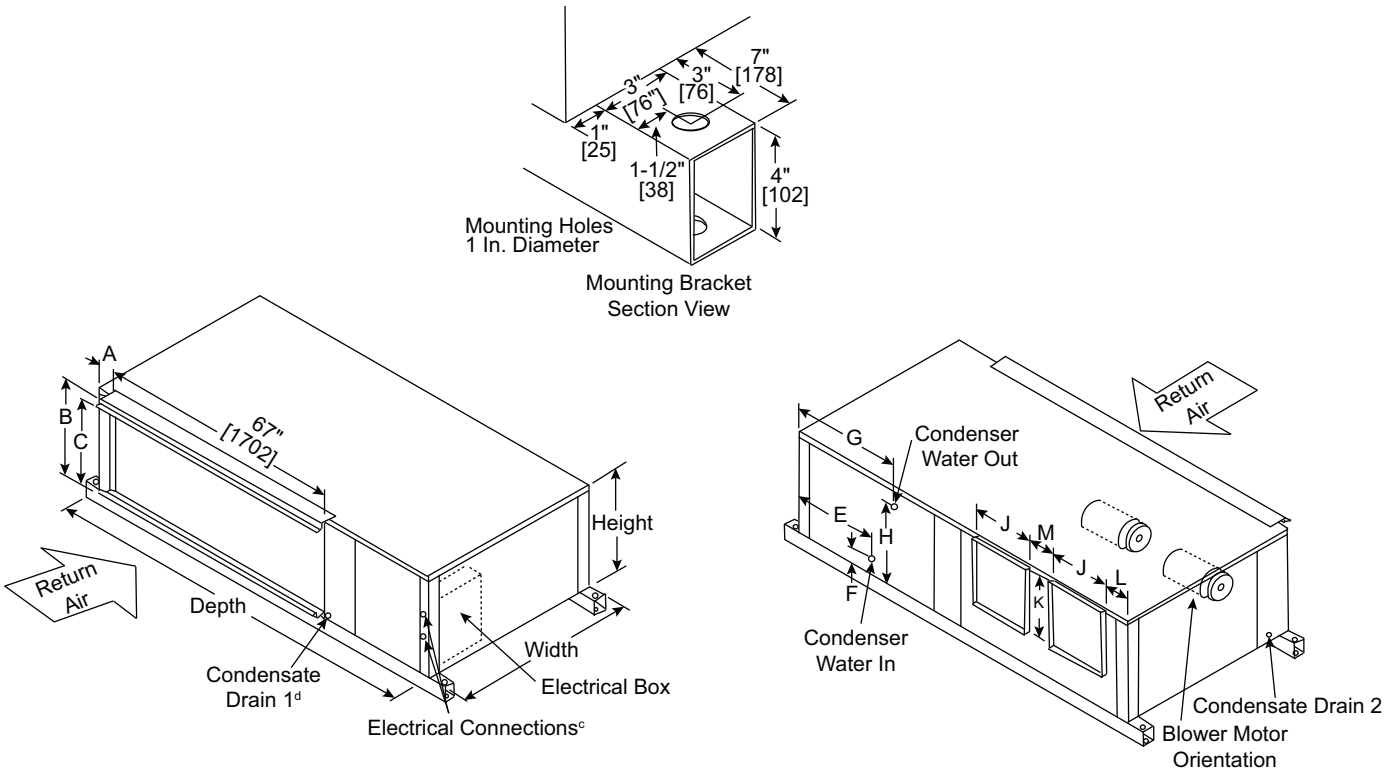

Left Return, Right Discharge

Left Return, Right Discharge

NOTE: Dimensions in [ ] are in millimeters.

50HQP UNIT SIZE	HEIGHT[a]	WIDTH	DEPTH[b]	RETURN AIR			CONDENSER WATER CONNECTIONS					SUPPLY AIR (Blower Outlets)				REPLACEMENT FILTER SIZE (NOMINAL)
				A	B	C	E	F	G	H	DIAMETER (FPT)	J	K	L	M	
180	25.25	60.25	106.50	2.00	24.00	22.00	22.00	7.25	22.00	16.00	1.5	27.75	17.25	5.00	4.00	24 x 34 x 1 (2 per unit)
242	36.00	60.25	106.50	2.00	34.75	32.75	24.50	7.25	24.50	19.62	2.0	23.75	19.75	7.75	9.75	17-1/4 x 34-1/2 x 1 (4 per unit)

NOTE(S):

a. All dimensions in inches unless otherwise noted. All dimensions within ± 0.125-in. Specifications subject to change without notice. Condensate connections are 1.25 in. FPT on sizes 180 and 242.
b. When TruVu™ DDC controller is installed increase depth by 3.00 inches.
c. Front of the unit is considered as the side with electrical connections.
d. Distance from condensate drain center line to the bottom of the unit is 1-1/4 inches.

Fig. 3 — 50HQP180,242 Unit Dimensions

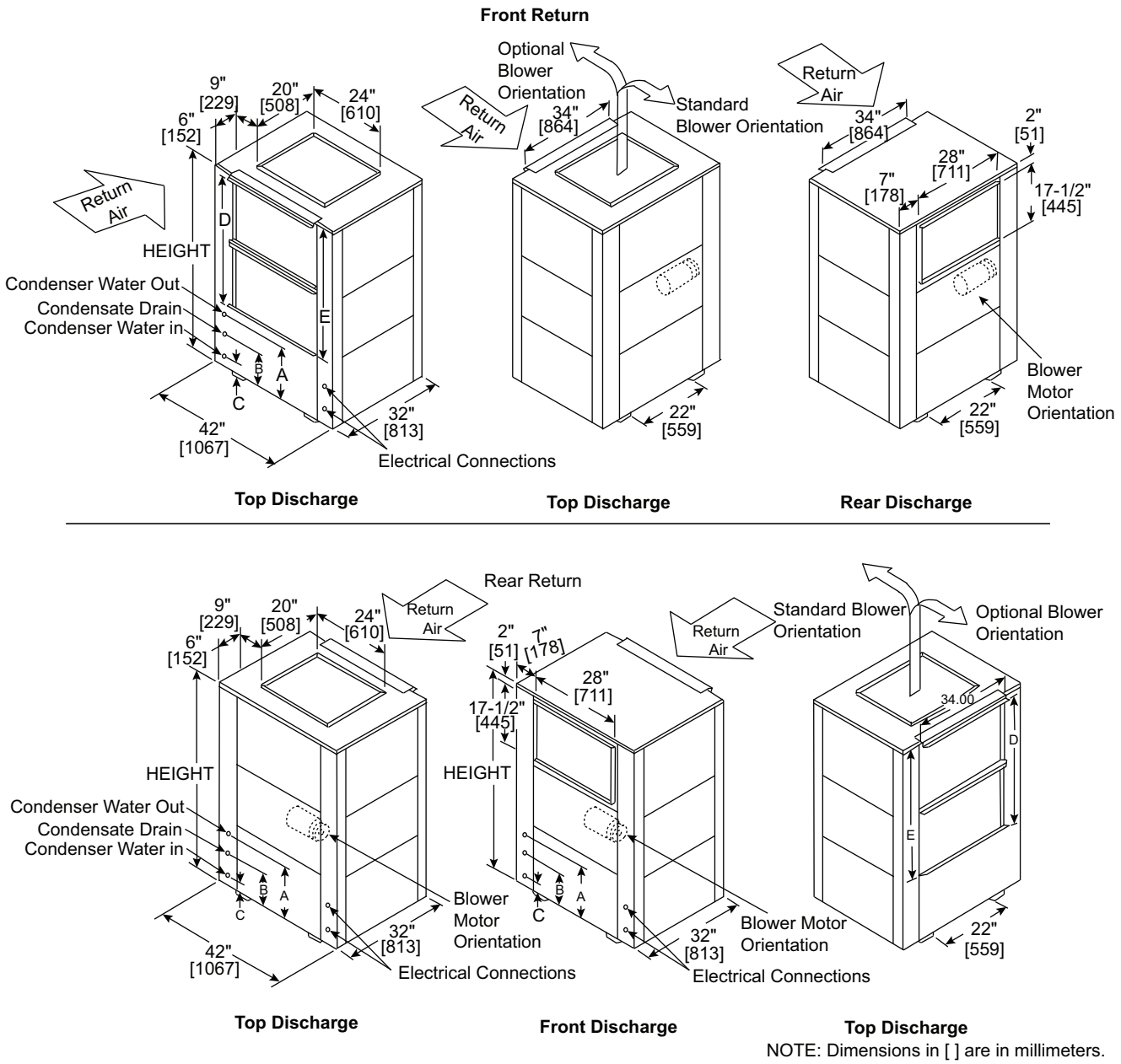

NOTE: Dimensions in [ ] are in millimeters.

50VQP UNIT SIZE	HEIGHT[a]	WIDTH	DEPTH[b]	CONDENSER WATER CONNECTIONS[c]				DUCT FLANGE	FILTER RACK	REPLACEMENT FILTER SIZE (NOMINAL)
				A	B	C	Diameter (FPT)	D	E	
072	62.00	42.00	32.00	14.75	8.50	2.75	1	38.00	40.00	20 x 34-1/2 x 1 (2)
096	62.00	42.00	32.00	14.75	8.50	2.75	1			
120	62.00	42.00	32.00	15.00	9.00	3.00	1-1/2			

NOTE(S):

a. All dimensions in inches unless otherwise noted. All dimensions within ± 0.125-in. Specifications subject to change without notice. Condensate connections are 0.75 in. FPT on sizes 072-120.
b. When TruVu™ DDC controller is installed increase depth by 3.00 inches.
c. Front of unit is side with water and electrical connections.

Fig. 4 — 50VQP072-120 Unit Dimensions

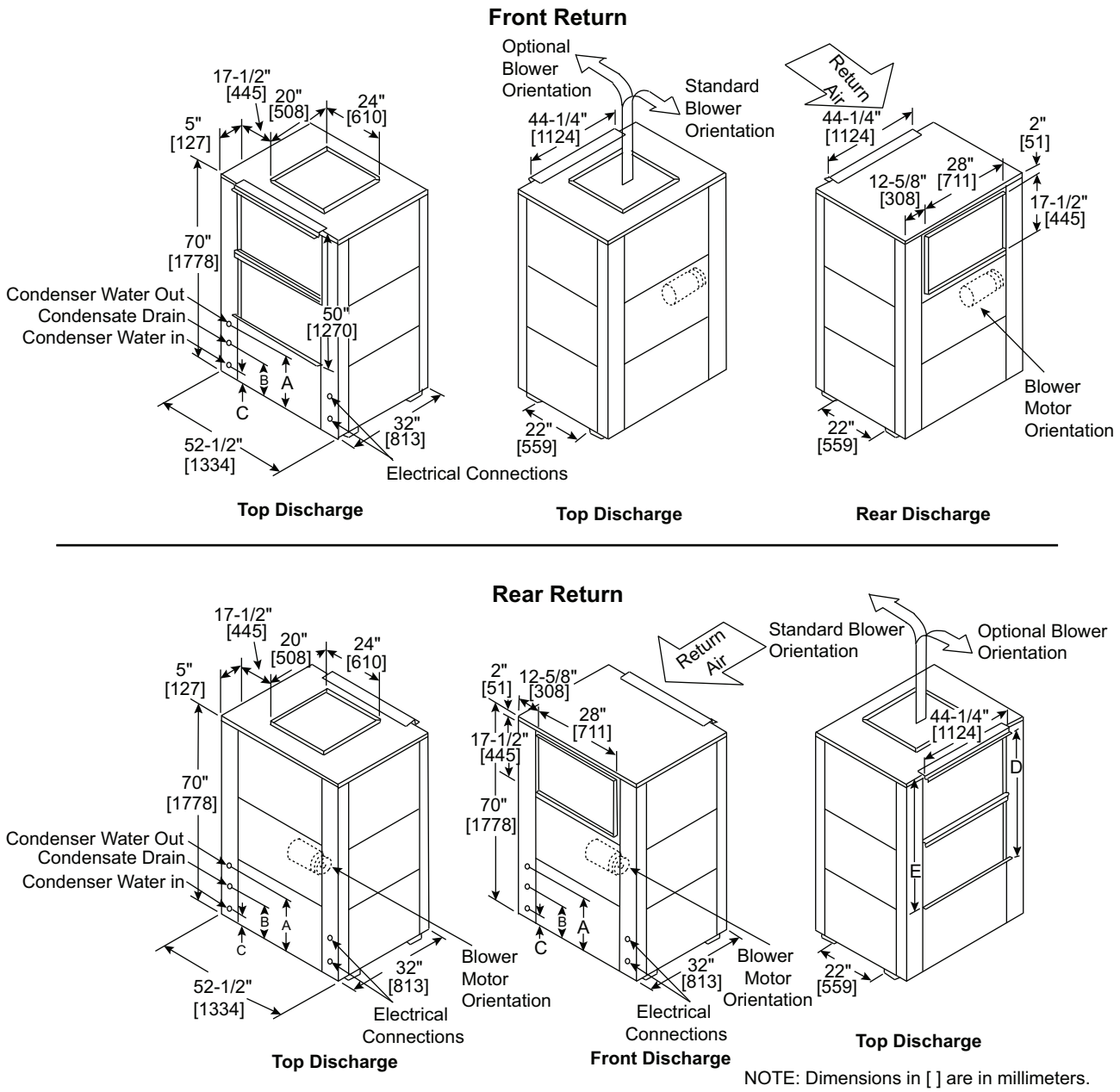

NOTE: Dimensions in [ ] are in millimeters.

50VQP UNIT SIZE	HEIGHT[a]	WIDTH	DEPTH[b]	CONDENSER WATER CONNECTIONS[c]				DUCT FLANGE	FILTER RACK	REPLACEMENT FILTER SIZE (NOMINAL)
				A	B	C	Diameter (FPT)	D	E	
151	70.00	52.50	32.00	17.00	10.50	3.00	1-1/2	48.00	50.00	24 x 24 x 1 (4 per unit)
181	70.00	52.50	32.00	17.00	10.50	3.00	1-1/2			

NOTE(S):

a. All dimensions in inches unless otherwise noted. All dimensions within ± 0.125-in. Specifications subject to change without notice. Condensate connections are 0.75 in. FPT on sizes 151 and 181.
b. When TruVu™ DDC controller is installed increase depth by 3.00 inches.
c. Front of unit is side with water and electrical connections.

Fig. 5 — 50VQP151,181 Unit Dimensions

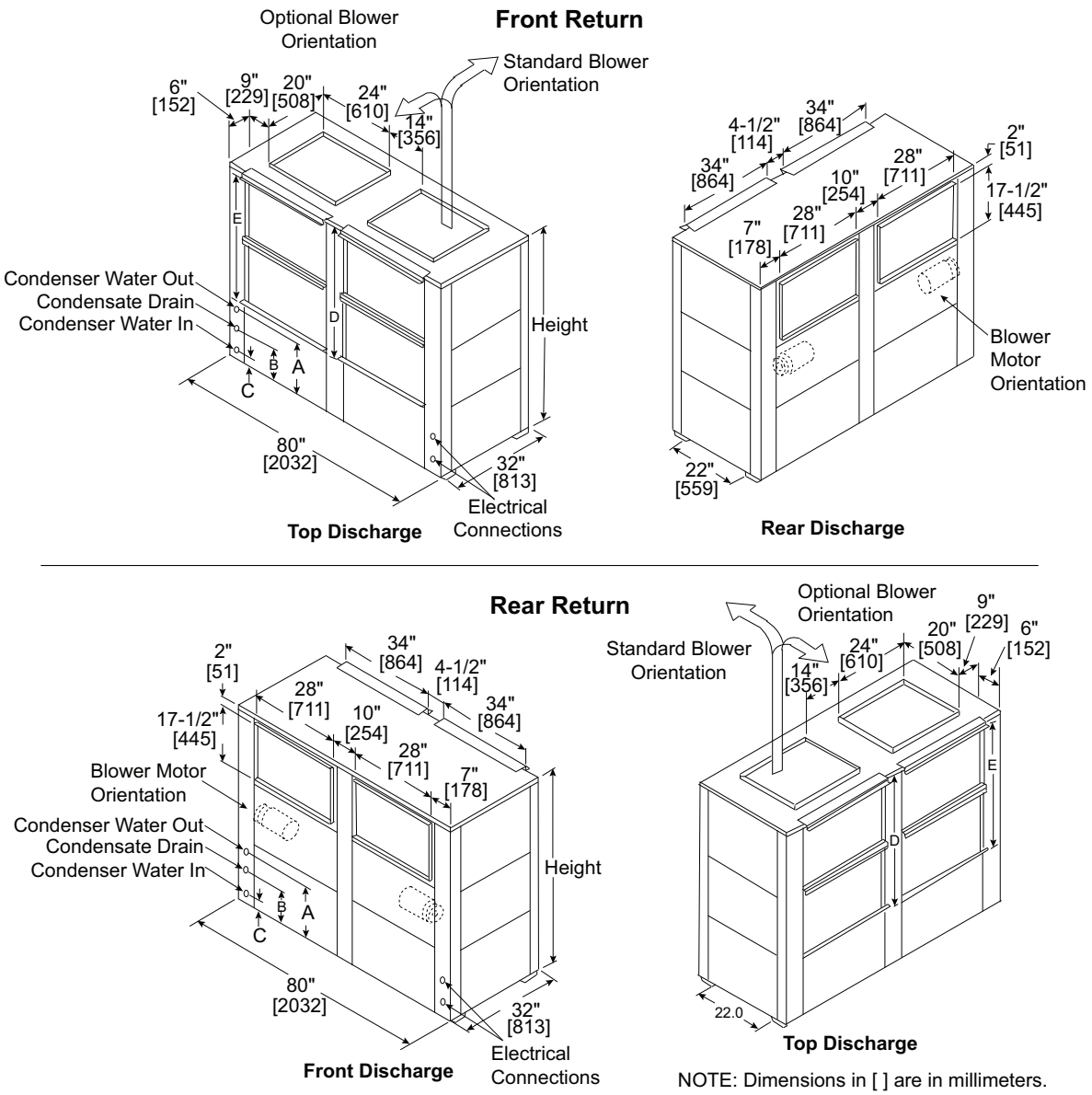

NOTE: Dimensions in [ ] are in millimeters.

50VQP UNIT SIZE	HEIGHT[a]	WIDTH	DEPTH[b]	CONDENSER WATER CONNECTIONS[c]				DUCT FLANGE	FILTER RACK	REPLACEMENT FILTER SIZE (NOMINAL)
				A	B	C	Diameter (FPT)	D	E	
210	62.00	80.00	32.00	17.50	8.75	2.75	2	40.00	38.00	20 x 34-1/2 x 1 (4 per unit)
240	66.50	80.00	32.00	18.88	8.75	2.75	2	40.00	38.00	
300	66.50	80.00	32.00	18.80	8.75	2.75	2	40.00	38.00	
360	86.50	80.00	32.00	17.00	8.75	2.75	2	60.00	58.00	30 x 34-1/2 x 1 (4 per unit, size 360 only)

NOTE(S):

a. All dimensions in inches unless otherwise noted. All dimensions within ± 0.125-in. Specifications subject to change without notice. Condensate connections are 1.25 in. FPT on sizes 210-360.
b. When TruVu™ DDC controller is installed increase depth by 3.00 inches.
c. Front of unit is side with water and electrical connections.

Fig. 6 — 50VQP210-360 Unit Dimensions

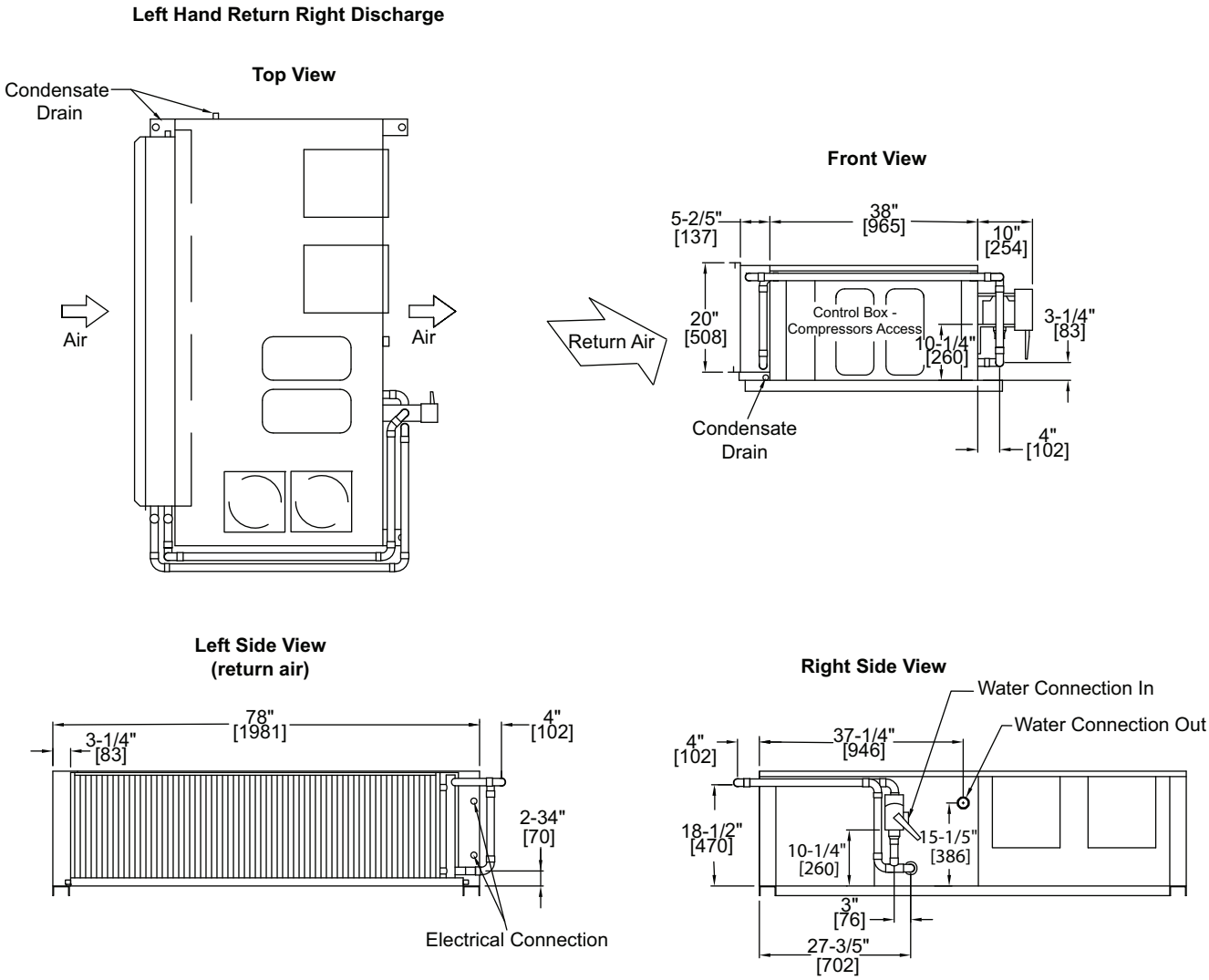

50HQP UNIT SIZE	072	096	120
FILTER QTY & SIZE	(2) 20" x 34-1/2" x 1"	(2) 20" x 34-1/2" x 1"	(2) 20" x 34-1/2" x 1"
CONDENSATE DRAIN	3/4" FPT	3/4" FPT	3/4" FPT
WATER CONN. OUT	1" FPT	1" FPT	1-1/4" FPT
WATER CONN. IN	2" FPT	2" FPT	2" FPT

NOTE(S):
1. Dimensions in inches [mm].
2. Units with two supply fan blowers require a pair of pants discharge duct.

Fig. 7 — 50HQP072-120 Units with Economizer

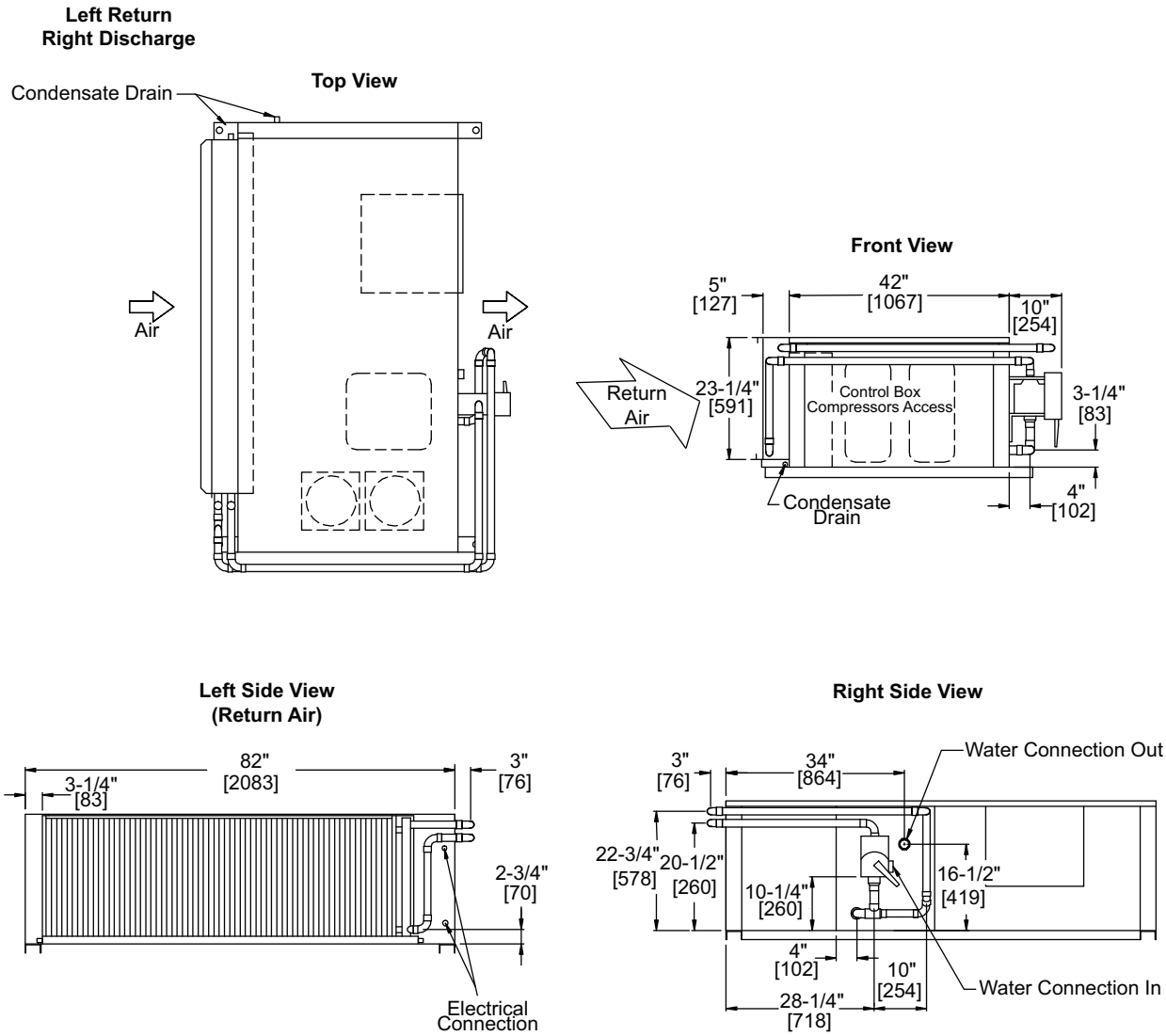

FILTER QTY & SIZE	(2) 24" x 34" x 1"
CONDENSATE DRAIN	3/4" FPT
WATER CONN. OUT	1-1/2" FPT
WATER CONN. IN	2" FPT

NOTE: Dimensions in inches [mm].

Fig. 8 — 50HQP150 Units with Economizer

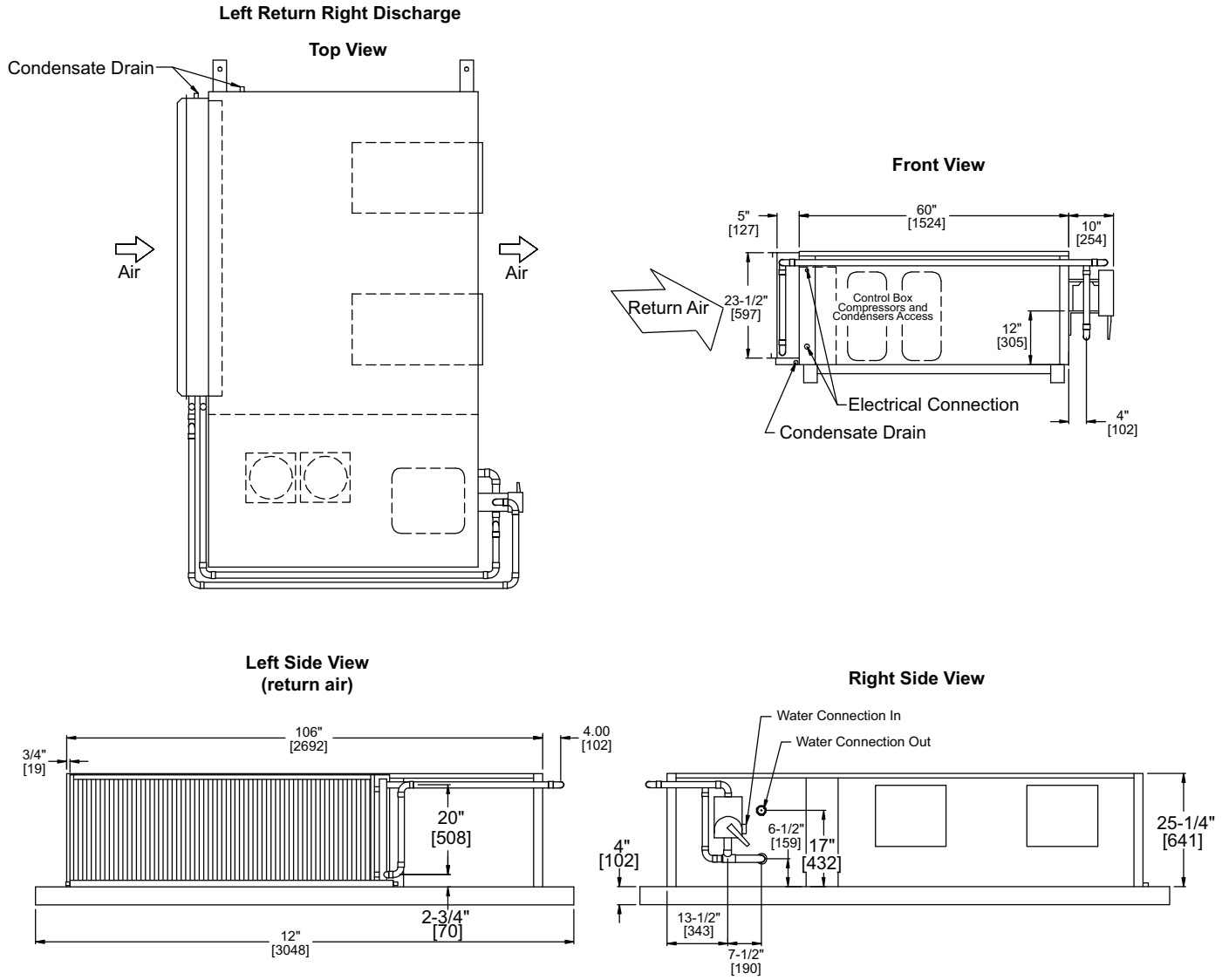

FILTER QTY & SIZE	(2) 24" x 34" x 1"
CONDENSATE DRAIN	1-1/4" FPT
WATER CONN. OUT	1-1/2" FPT
WATER CONN. IN	2" FPT

NOTE (S):
1. Dimensions in inches [mm].
2. Units with two supply outlets require a pair of pants duct connection.

Fig. 9 — 50HQP180 Units with Economizer

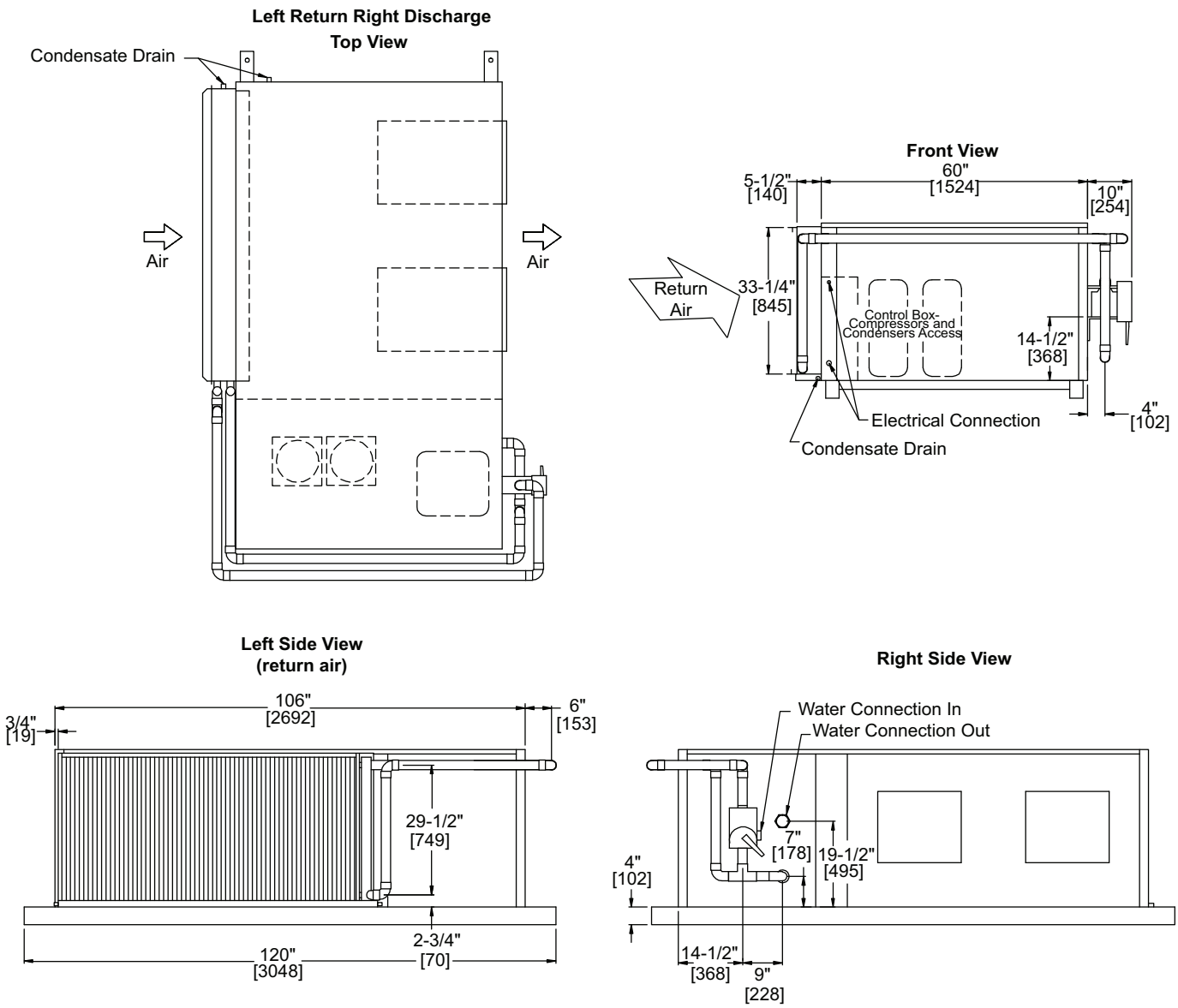

FILTER QTY & SIZE	(4) 17-1/4" X 34-1/2" X 1"
CONDENSATE DRAIN	1-1/4" FPT
WATER CONN. OUT	2" FPT
WATER CONN. IN	2" FPT

NOTE(S):
1. Dimensions in inches [mm].
2. Units with two supply outlets require a pair of pants duct connection.

Fig. 10 — 50HQP242 Units with Economizer

Left Return Back Discharge

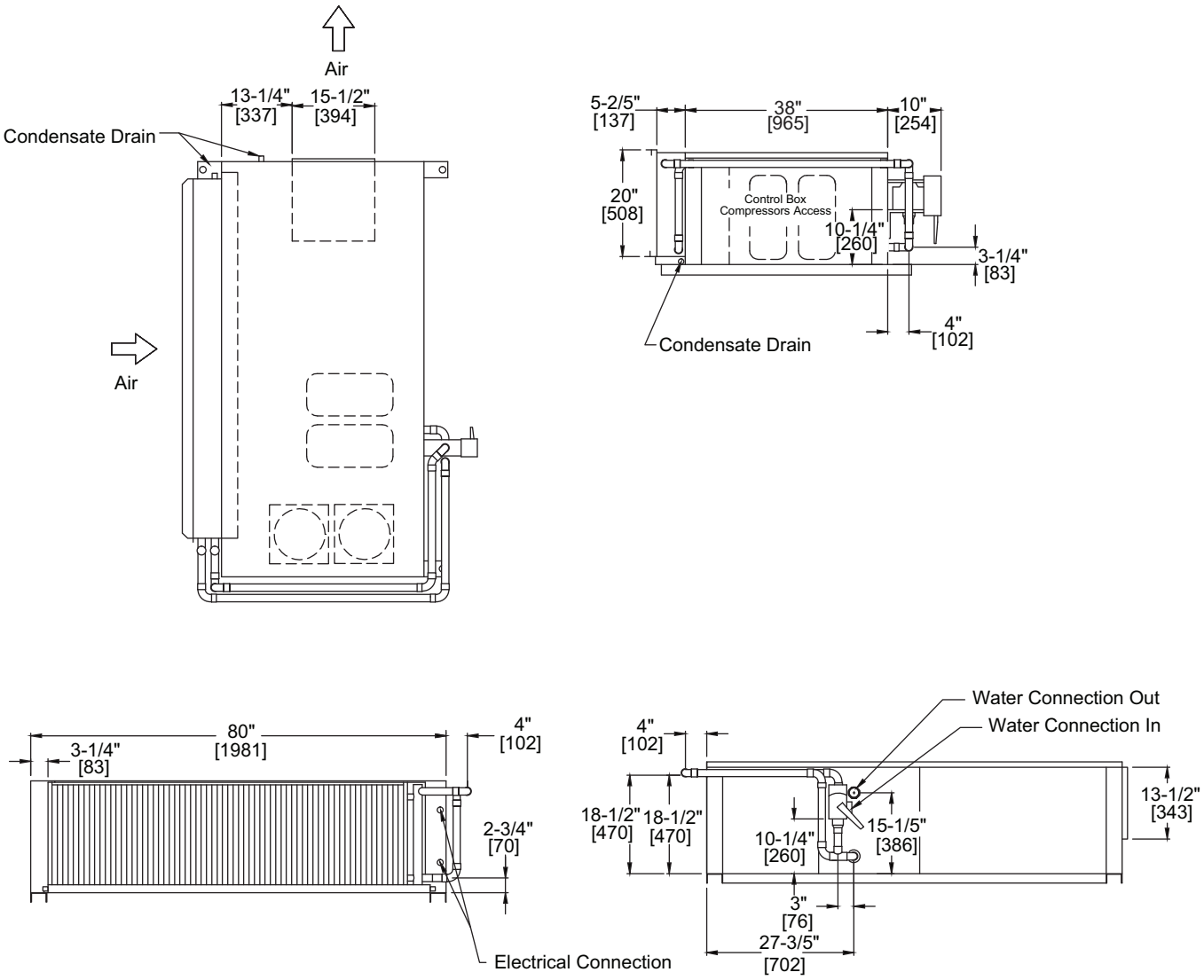

FILTER QTY & SIZE	(2) 20" X 34-1/2" X 1"
CONDENSATE DRAIN	3/4" FPT
WATER CONN. OUT	1" FPT
WATER CONN. IN	1" FPT

NOTE: Dimensions in inches [mm].

Fig. 11 — 50HQP072-096 Units with Waterside Economizer

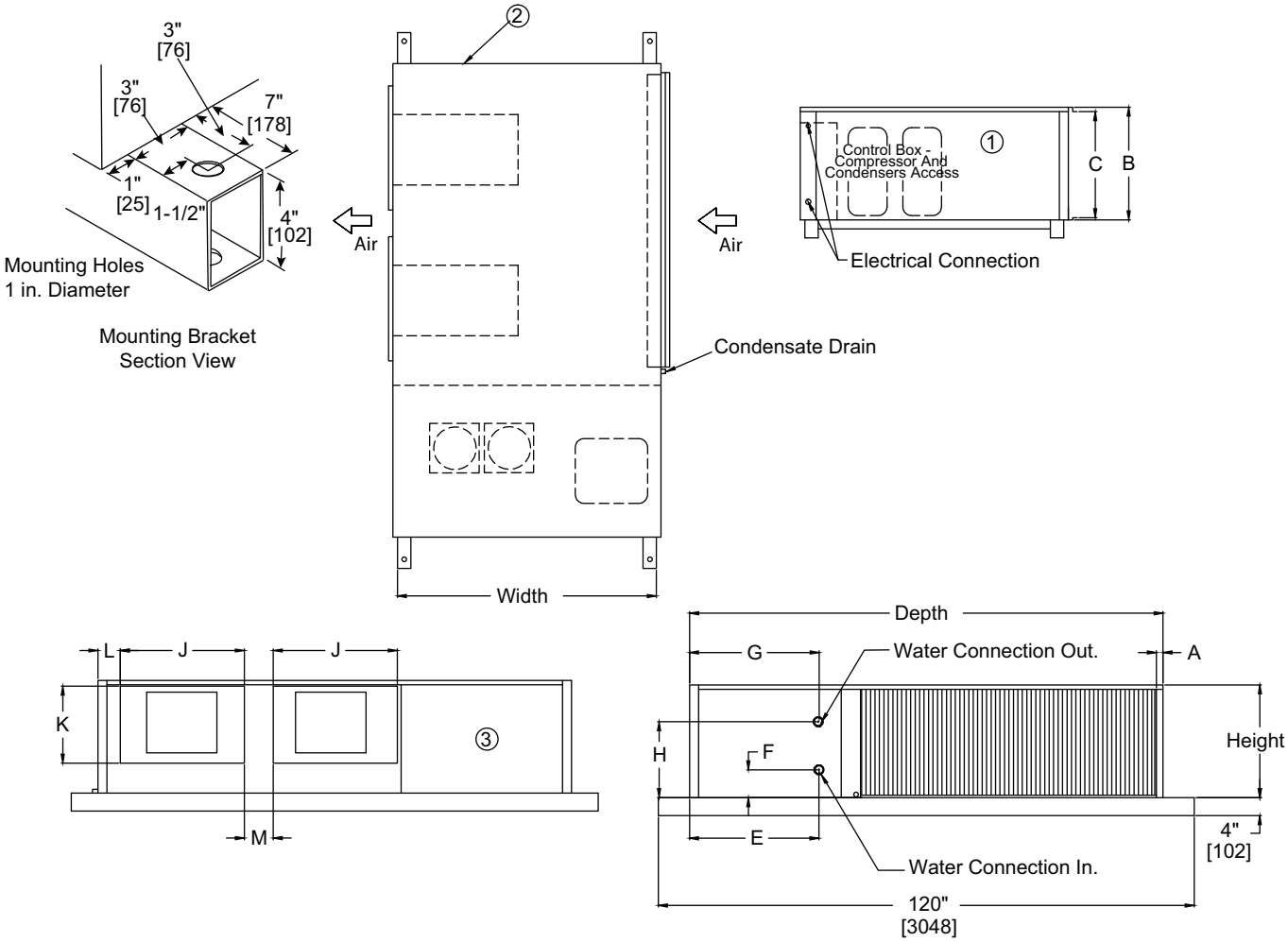

UNIT SIZE	HEIGHT	WIDTH	DEPTH	RETURN AIR			CONDENSER WATER CONNECTIONS					SUPPLY AIR				REPLACEMENT FILTER SIZE (NOMINAL)
				A	B	C	E	F	G	H	DIA. (FPT)	J	K	L	M	
180	25.25	60.25	106.50	2.00	24.00	22.00	22.50	7.25	22.00	16.00	1.25	27.75	17.25	5.00	4.00	2 (24 x 34 x 1)
242	36.00	60.25	106.50	2.00	36.00	34.00	24.50	8.00	24.00	19.62	1.25	23.75	19.75	7.75	9.75	2 (17.25 x 34.50 x 1)

SERVICE ACCESS TO:		
1	2	3
CONTROLS COMPRESSORS	BLOWER AND MOTOR	COMP. REFIG. COMPONENTS

NOTE(S):
1. Dimensions in inches [mm].
2. Units with two supply outlets require a pair of pants duct connection.

Fig. 12 — 50HQP180-242 Units without Waterside Economizer

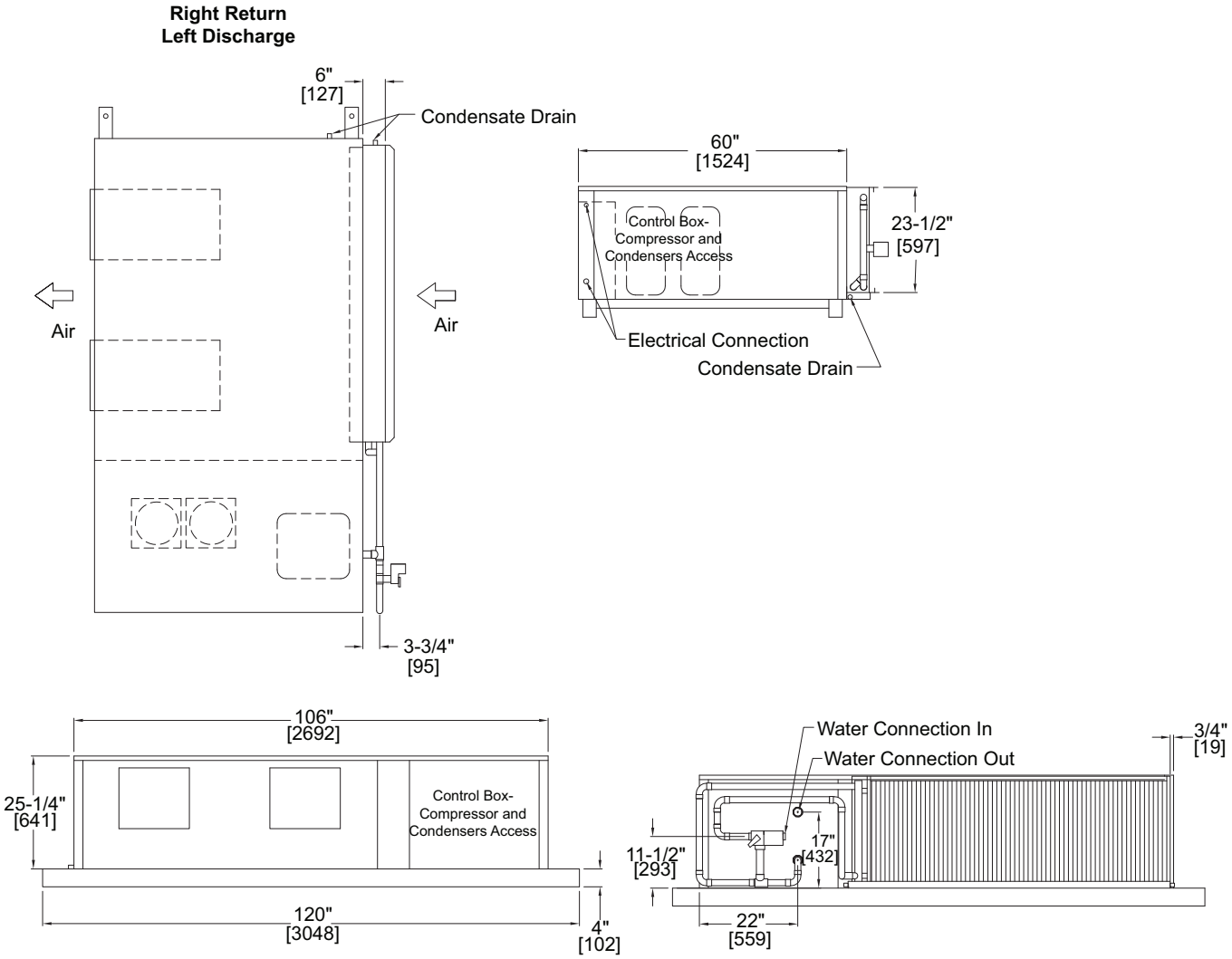

Filter Qty and Size	(2) 23-1/4" x 34-1/2" x 1"
Condensate Drain	(3) 3/4"FPT
Water Conn. Out	1.5" FPT
Water Conn. In	2" FPT

NOTE(S):
1. Dimensions in inches [mm].
2. Units with two supply outlets require a “pair of pants” duct connection.

Fig. 13 — 50HQP180-242 Units with Waterside Economizer

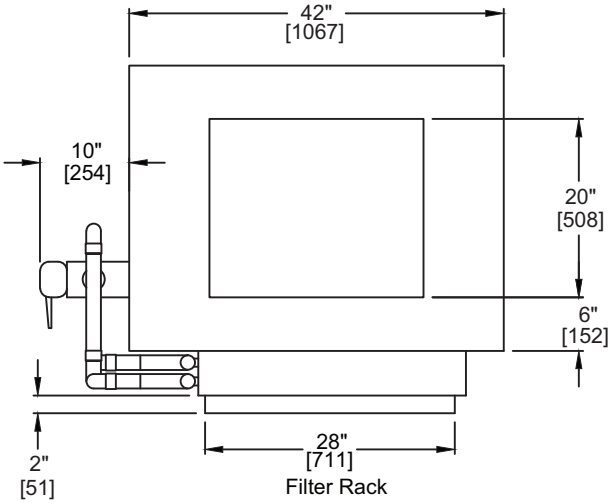

Top View

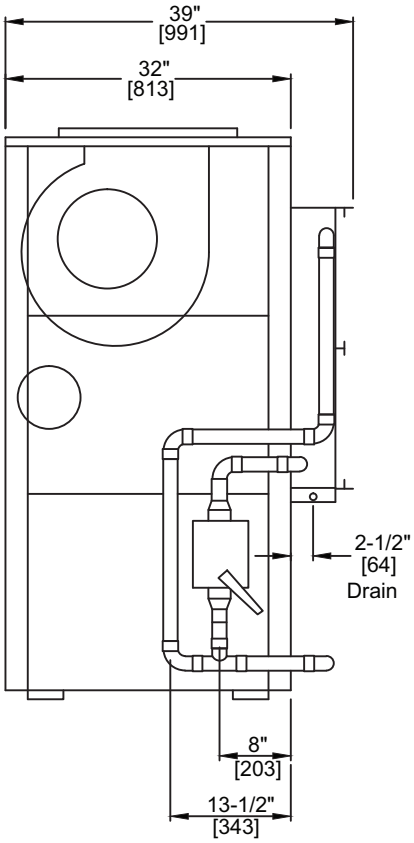

Left Side View

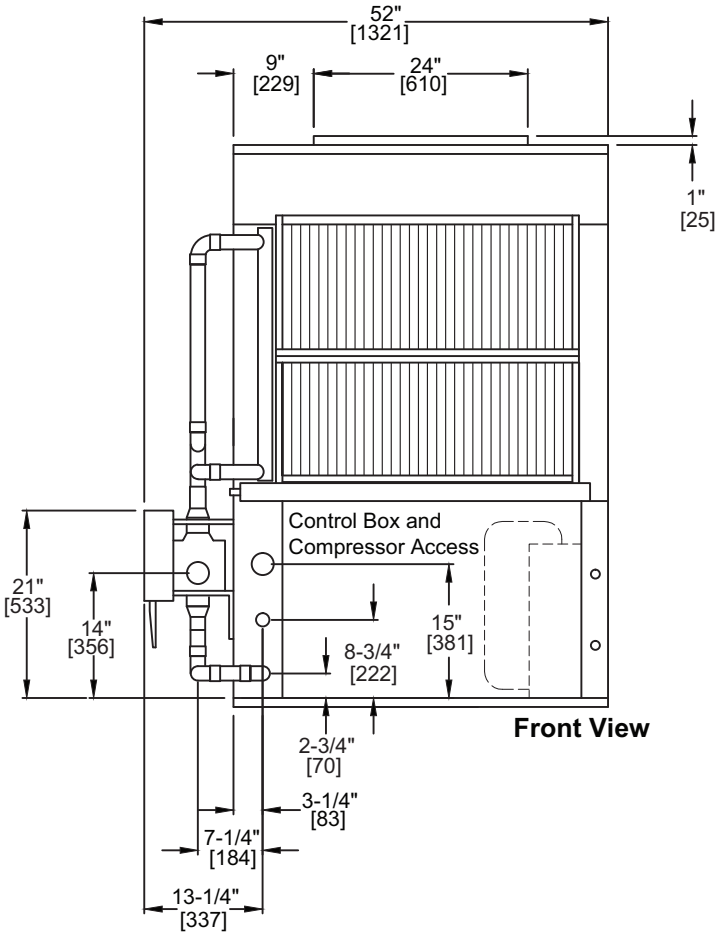

Front View

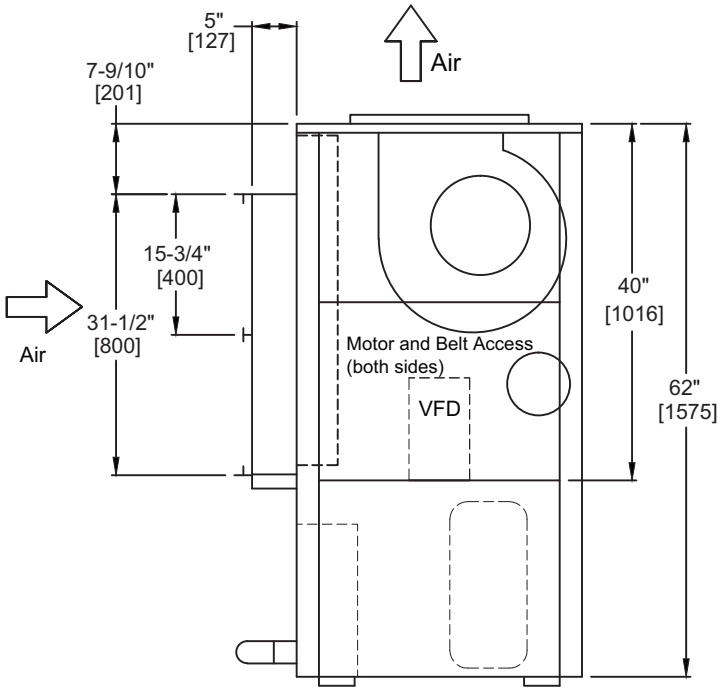

Right Side View

Filter Qty and Size	(2) 20" x 34-1/2" x 1"
Condensate Conn.	3/4" FPT
Water Conn. Out	1" FPT
Water Conn. In	2" FPT
Size	50VQP072-096

NOTE: Dimensions in inches [mm].

Fig. 14 — 50VQP072-096 Units Front Return, Top Discharge, with Economizer

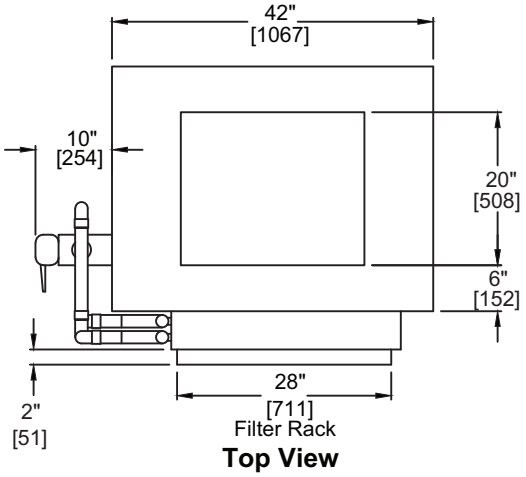

Top View

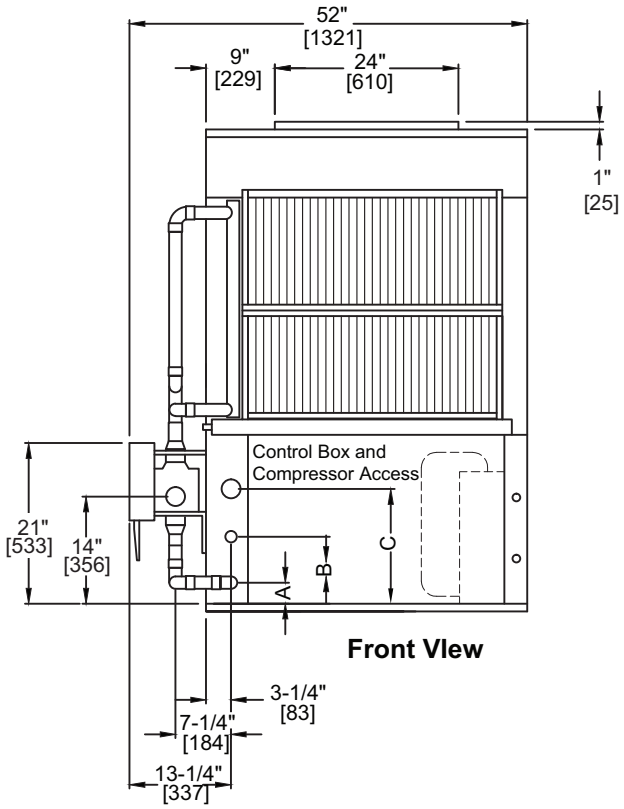

Front Vlew

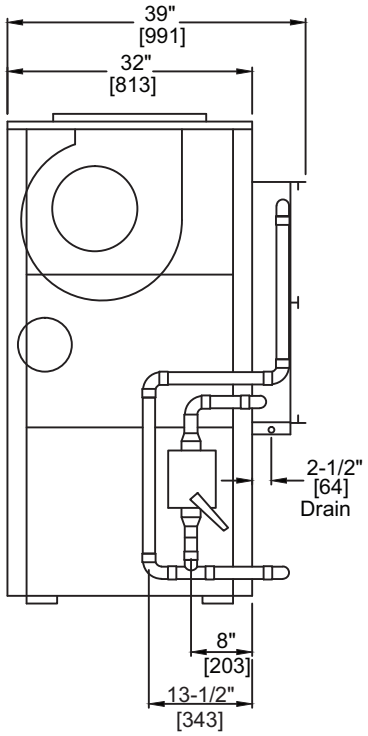

Left Side View

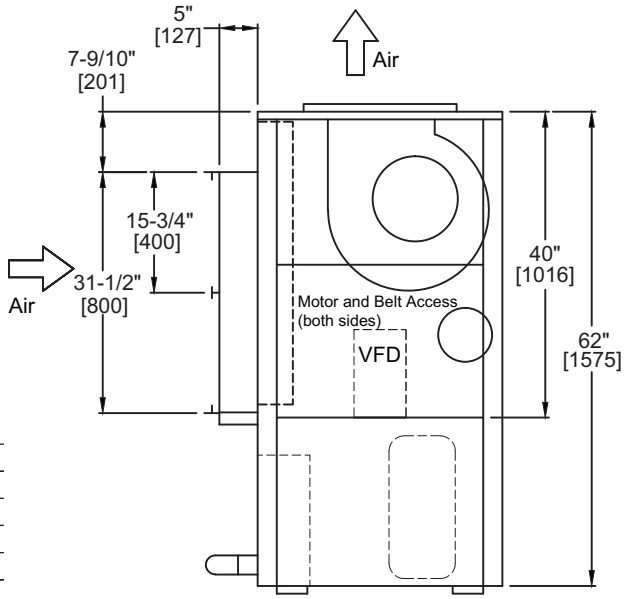

Right Side View

Filter Qty. and Size	(2) 20" x 34-1/2" x 1"
Condensate Conn.	3/4" FPT
Water Conn. Out	1-1/2" FPT
Water Conn. In	2" FPT
C	15"
B	9"
A	3"
Size	50VQP120

NOTE: Dimensions in inches [mm].

Fig. 15 — 50VQP120 Units Front Return, Top Discharge, with Economizer

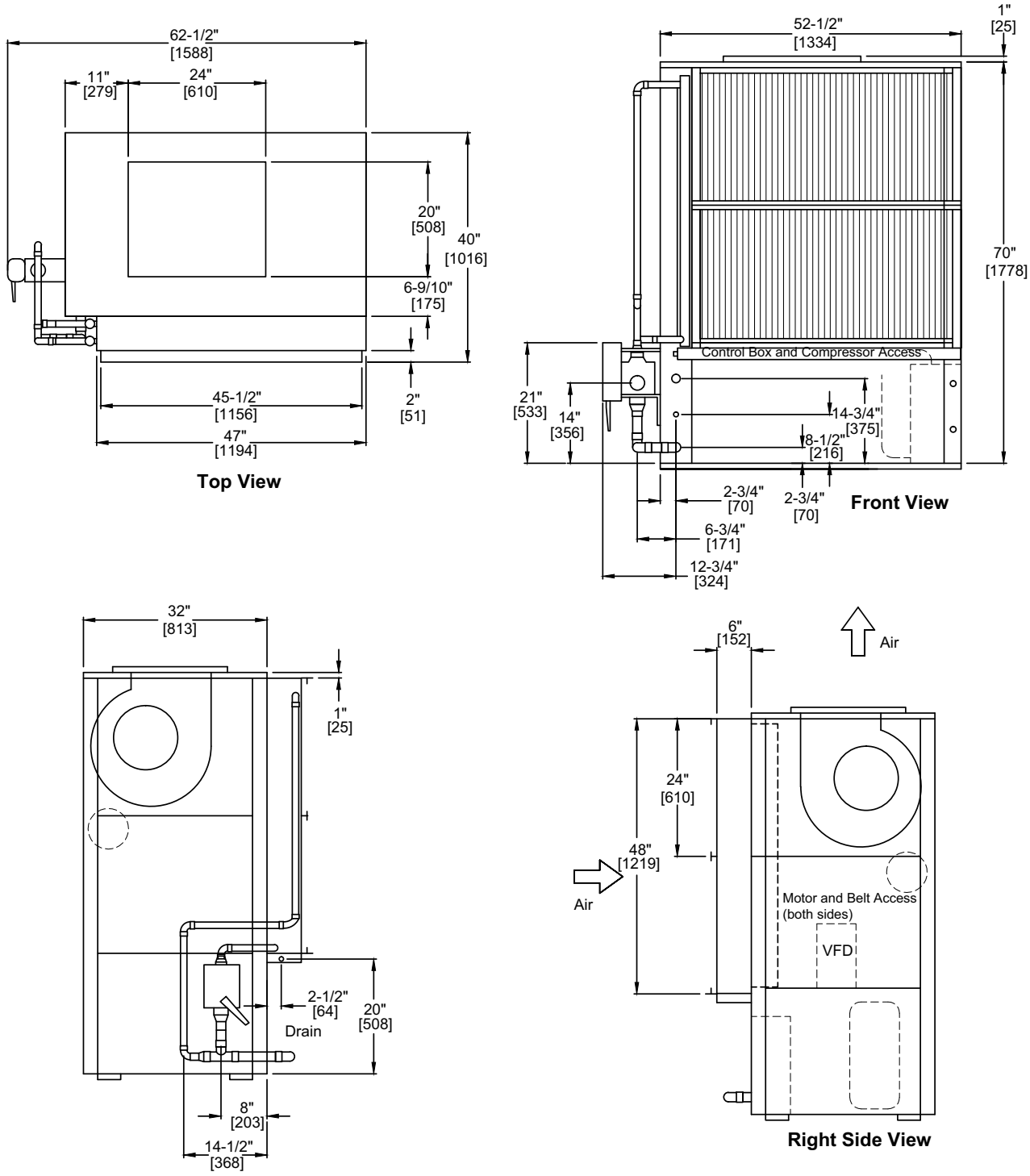

Filter Qty. and Size	(4) 24" x 24" x 1"
Condensate Conn.	3/4" FPT
Water Conn. Out	1.50" FPT
Water Conn. In	2" FPT
Size	50VQP151-181

NOTE(S): Dimensions in inches [mm].

Fig. 16 — 50VQP151 and 181 Units, Front Return, Top Discharge, with Economizer

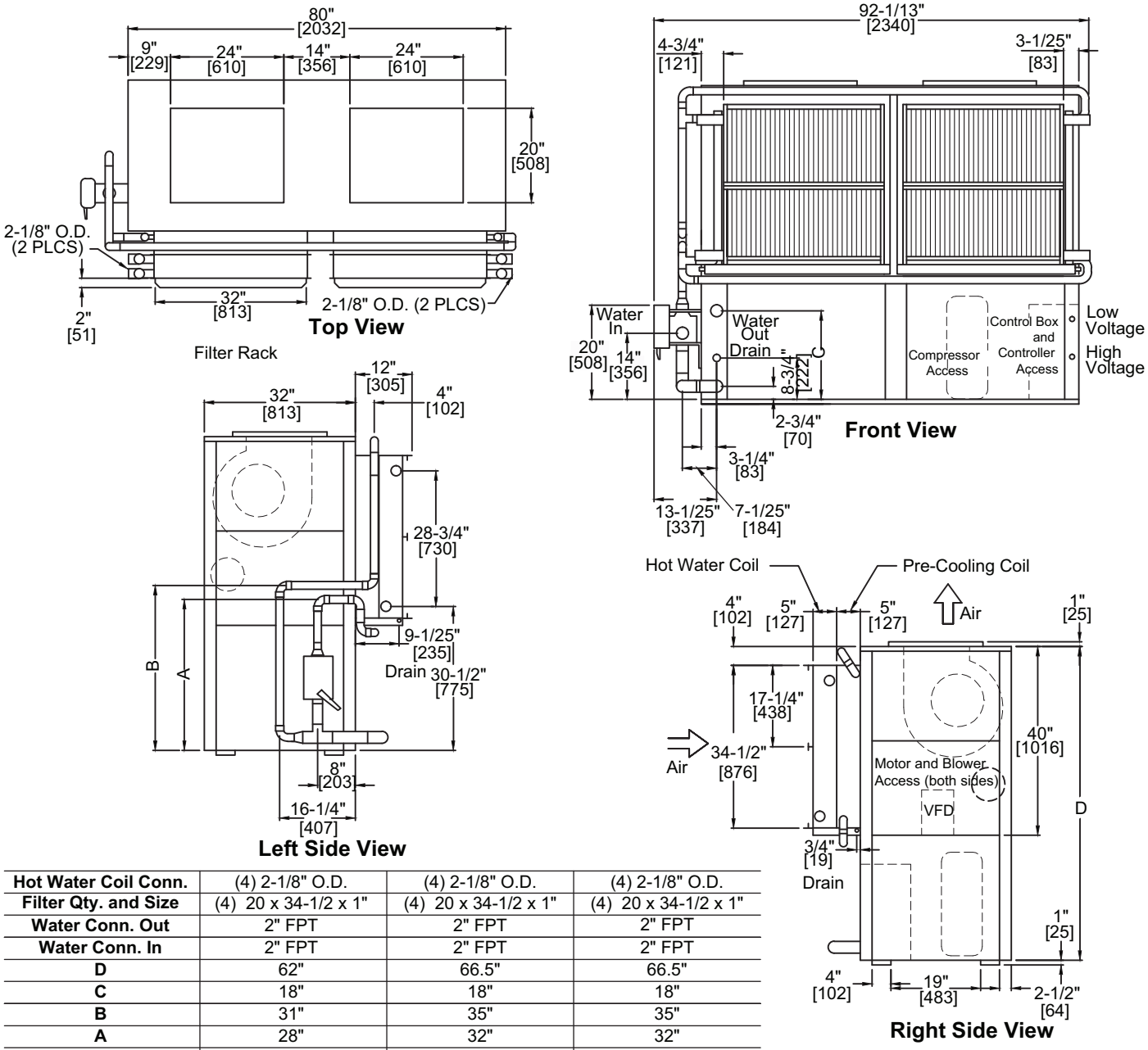

Dimension	50VQP210	50VQP240	50VQP300
Hot Water Coil Conn.	(4) 2-1/8" O.D.	(4) 2-1/8" O.D.	(4) 2-1/8" O.D.
Filter Qty. and Size	(4) 20 x 34-1/2 x 1"	(4) 20 x 34-1/2 x 1"	(4) 20 x 34-1/2 x 1"
Water Conn. Out	2" FPT	2" FPT	2" FPT
Water Conn. In	2" FPT	2" FPT	2" FPT
D	62"	66.5"	66.5"
C	18"	18"	18"
B	31"	35"	35"
A	28"	32"	32"

NOTE(S):
1. Dimensions in inches [mm].
2. Units with two supply outlets require a “pair of pants” duct connection.

Fig. 17 — 50VQP210-300 Units, Front Return, Top Discharge, with Economizer and Hot Water Coil

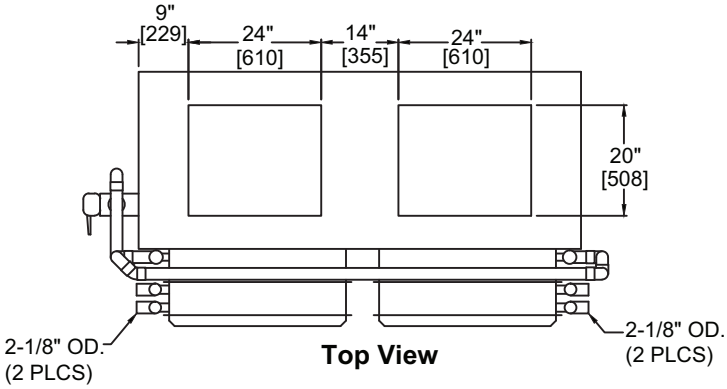

Top View

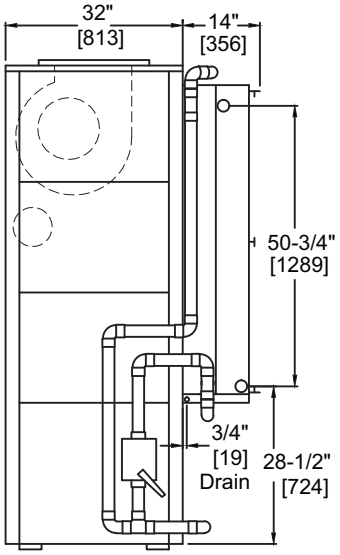

Left Side View

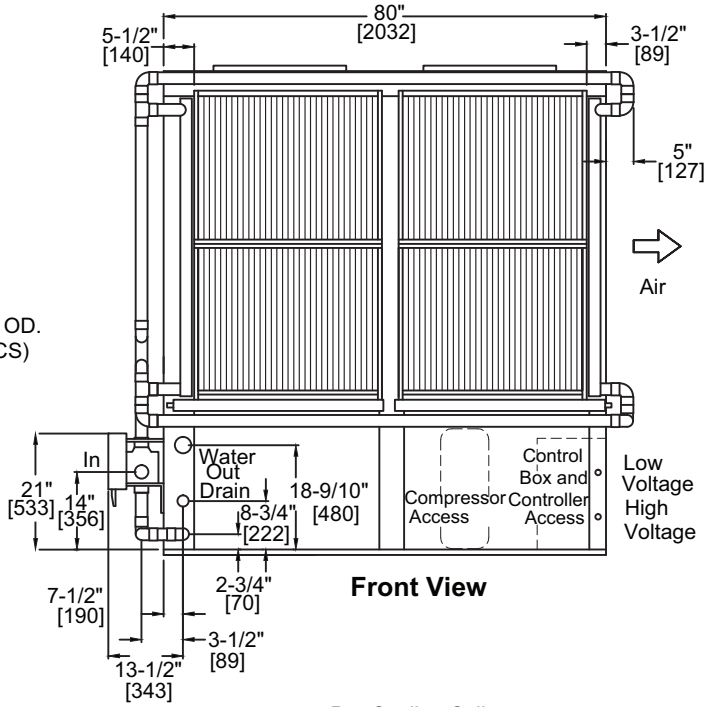

Front View

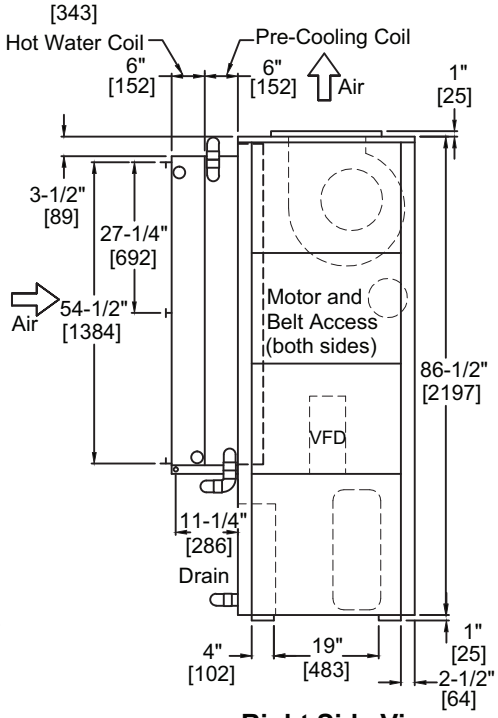

Right Side View

DESCRIPTION	SIZE
Water Conn. Out	2" FPT
Water Conn. In	2" FPT
Filter Qty. and Size	(4) 30" x 34-1/2" x 1"

NOTE(S):
1. Dimensions in inches [mm].
2. Units with two supply outlets require a “pair of pants” duct connection.

Fig. 18 — 50VQP360 Units, Front Return, Top Discharge, with Economizer, with Hot Water Coil

50HQP072-150 Unit Service Clearances

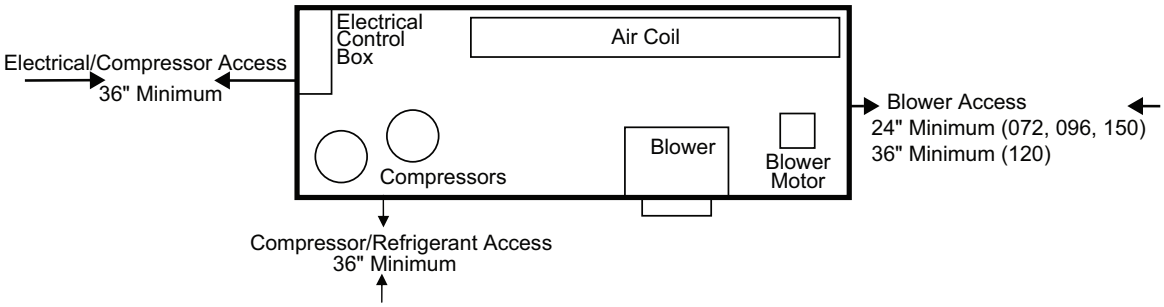

50HQP180-242 Units Service Clearances

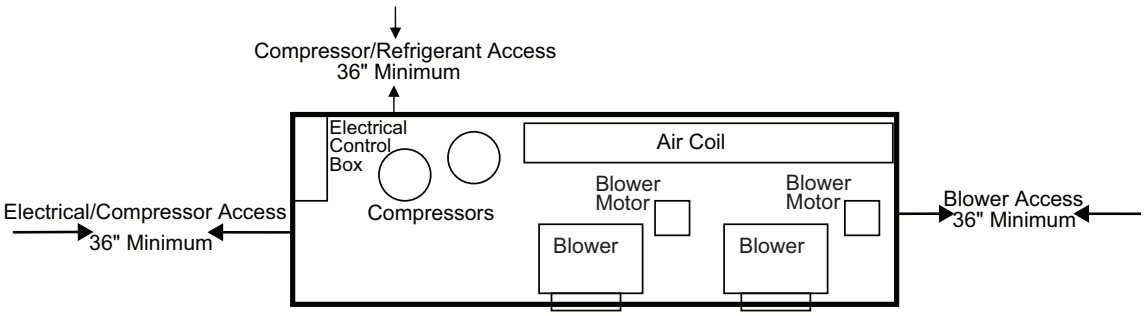

NOTE: The local electric codes may require 36" or more clearance at all electrical control boxes.

50VQP072-181 Unit Service Clearances

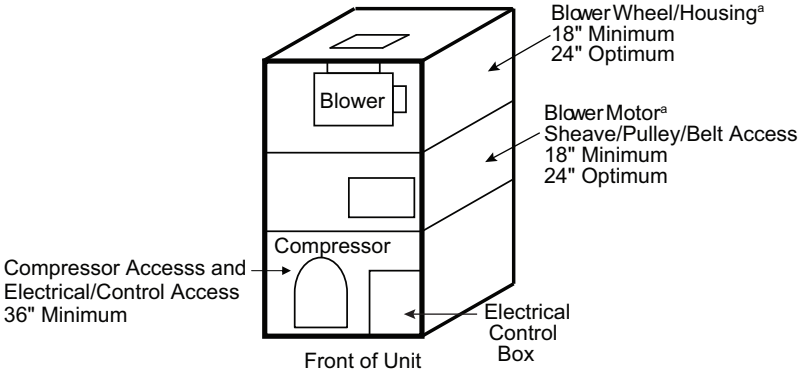

NOTE(S):

a. Blower motor and blower housing access is required on both sides of the unit.

50VQP210-360 Units Service Clearances

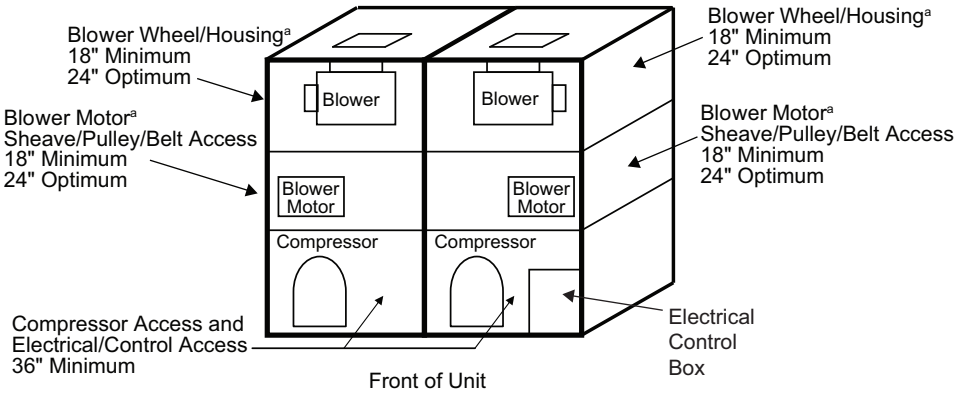

NOTE(S):

a. Blower motor and blower housing access is required on BOTH SIDES of the unit.

Fig. 19 — Service Clearances

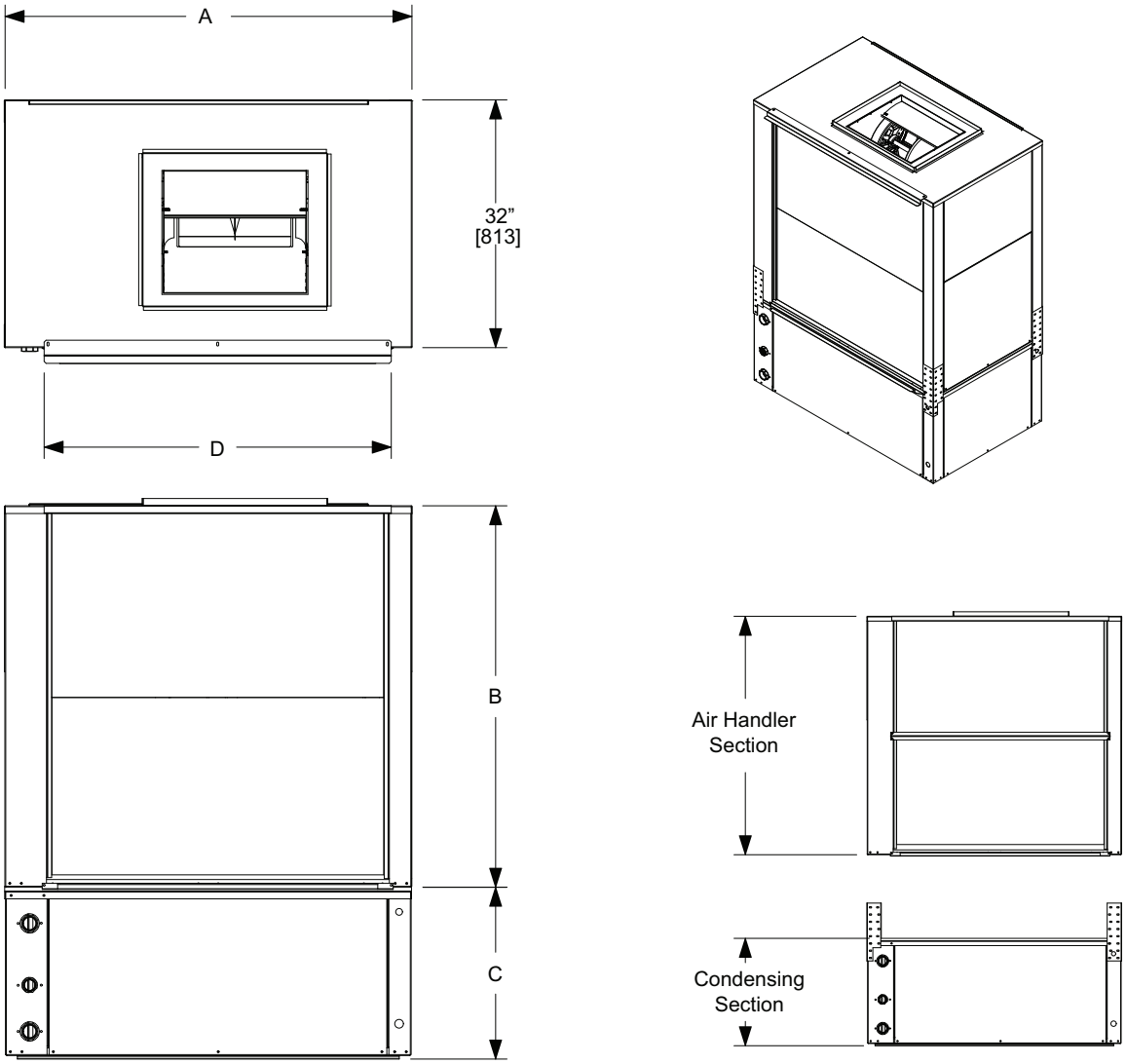

MODEL	WIDTH (in.)	HEIGHT (in.)		FILTER RACK (in.)	WEIGHTS (lb)	
	A	B	C	D	AH	CS
50VQP072	42	42	22	33	204	396
50VQP096	42	42	22	33	242	468
50VQP120	42	42	22	33	264	511
50VQP151	52.50	50	22	45	330	640
50VQP181	52.50	50	22	45	360	700

LEGEND

AH — Air Handler Section
CS — Condensing Section

NOTE: Dimensions in [ ] are in millimeters.

Fig. 20 — 50VQP072-181 Units with Take Apart Construction Option

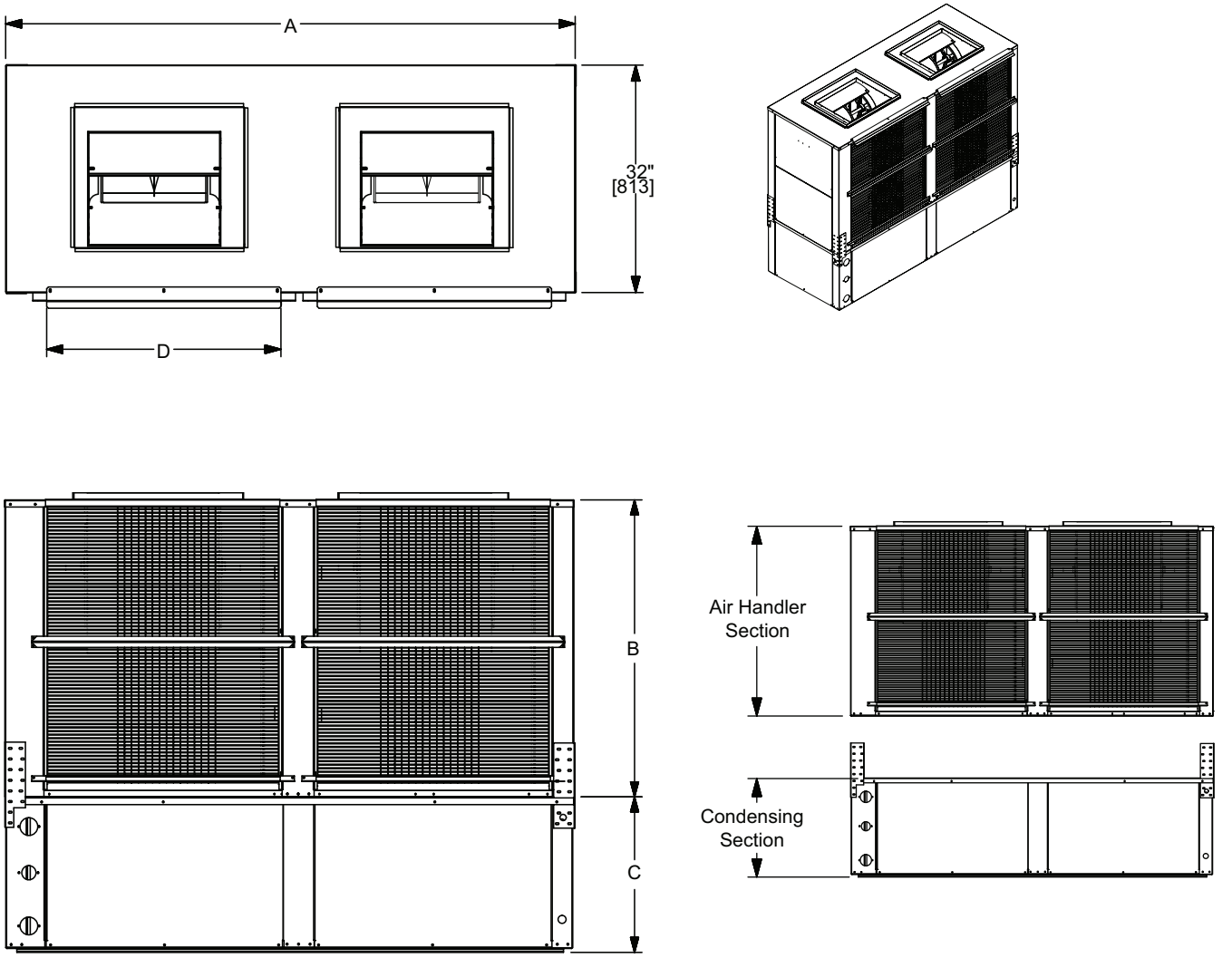

	WIDTH (in.)	HEIGHT (in.)		FILTER RACK (in.)	WEIGHTS (in.)	
Model	**A**	**B**	**C**	**D**	**AH**	**CS**
50VQP210	80	42	22	33	408	792
50VQP240	80	42	26	33	460	890
50VQP300	80	42	26	33	500	970
50VQP360	80	62	27	33	595	1155

LEGEND
AH — Air Handler Section
CS — Condensing Section

NOTE: Dimensions in [ ] are in millimeters.

Fig. 21 — 50VQP210-360 Units with Take Apart Construction Option

INSTALLATION GUIDELINES (ALL UNITS)

1. Be sure that the location chosen for unit installation provides ambient temperatures maintained above freezing.
2. Be sure the installation location is isolated from sleeping areas, private offices and other acoustically sensitive spaces.
3. Be sure unit is mounted at a height sufficient to provide an adequate slope of the condensate lines. If an appropriate slope cannot be achieved, a field-supplied condensate pump may be required.
4. On horizontal units, allow adequate room below the unit for condensate drain trap and do not locate the unit above supply piping.
5. Provide sufficient space for duct connection. Do not allow the weight of the ductwork to rest on the unit.
6. Provide adequate clearance for filter replacement and drain pan cleaning. Do not allow piping, conduit, etc. to block filter access.
7. Provide sufficient access to allow maintenance and servicing of the blower and blower motor, compressor and coils. Removal of the entire unit from the installation area should not be necessary.
8. Provide an unobstructed path to the unit within the closet or mechanical room. Space should be sufficient to allow return air to freely enter the space.
9. Provide ready access to water valves and fittings, and screwdriver access to unit side panels, discharge collar, and all electrical connections.
10. Where access to side panels is limited, pre-removal of the control box side mounting screws may be necessary for future servicing.
11. For units with dual supply fan outlets, ensure the installation area has sufficient clearance for a pair of pants duct discharge.
12. 50HQP only - for units with SAV™ or supply fan VFD option, select installation location for the VFD. If VFD location results in motor wiring that exceeds 10 ft, consider use of shaft grounding rings (field provided).

IMPORTANT: It is the installation contractor's responsibility to ensure that all equipment is installed with proper access for service, installation, and removal in accordance with Carrier's recommended service clearance and installation instructions. Please refer to the Carrier Commercial WSHP Warranty Statement (document number 04-570008-01) for details on warranty exclusions regarding equipment access, removal and clearances.

Fig. 22 — Field-Installed VFD Shipping Location, 50HQP Units

Step 2 — Check Unit

Upon receipt of shipment at the jobsite, carefully check the shipment against the bill of lading. Make sure all units have been received. Inspect the carton or crating of each unit, and inspect each unit for damage.

INSPECT UNIT

To prepare the unit for installation, complete the procedures listed below:

1. Verify the correct unit has been received. Check the unit capacity (tonnage), voltage, orientation, and configuration.
2. Verify the electrical data on the unit nameplate with the jobsite power feed (voltage, amperage, MCA) and power protection (MOCP).
3. Verify the unit is the correct model for the entering water temperature of the job (standard or extended range).
4. Remove the unit packaging, keeping the unit attached to the shipping pallet. Do not destroy packaging. Save for reinstallation on the unit if the unit will not be fully installed.
5. Open a unit access panel. Verify the refrigerant tubing is free of kinks or dents, and that it does not touch other unit components.
6. Check the water piping and piping connections to make sure they are free from defects, kinks, dents, and appear to be water tight. Verify system operating water pressure.
7. Inspect the blower assembly. Verify the blower has not come loose during shipping. Verify clearance between the blower wheel and the blower housing. Verify free blower rotation.
8. Inspect all electrical connections. Be sure connections are clean and tight at the terminals.
9. Check unit controls. If unit is ordered without factory installed DDC controller, verify field provided thermostat or DDC control is available. If factory installed TruVu™ controller, verify proper sensors have been provided and a commissioning interface will be available.
10. 50HQP Only - Check integral angle iron frames are provided with the unit, allowing the unit to be suspended from the ceiling using rods. Frames are pre-installed and welded to the cabinet.
11. 50HQP Only - Horizontal units ordered with a VFD will be provided with the VFD shipped loose for field installation. The unit will ship with the VFD secured to the top of the unit (see Fig. 22). The VFD is provided in a VFD enclosure along with the VFD manufacturers installation manual. Inspect for shipping damage prior to installation of the VFD. See Step 8 "Wire Field Power Supply" on page 36 for field wiring instructions.

NOTE: Any work required to gain full access to the unit for repair or service is not covered under the scope of the product warranty.

Step 3 — Locate Unit

⚠ CAUTION

Failure to remove shipping brackets from spring-mounted compressors will cause excessive noise and could cause component failure due to added vibration.

- Locate the unit in an indoor area that allows easy removal of the filter and access panels, and has enough room for service personnel to perform maintenance or repair.
- Provide sufficient room to make fluid, electrical, and duct connection(s).
- If the unit is located in a confined space such as a closet, provisions must be made for return air to freely enter the space.

- Unit condensate drains are not internally trapped. Allow room below the unit base for horizontal models for an adequate condensate trap.
- Horizontal units include two condensate drain connections to allow flexibility in unit sloping for proper drainage. Only one connection needs to be used. The unused connection must be plugged.
- These units are not approved for outdoor installation; therefore, they must be installed inside the structure being conditioned. Do not locate units in areas that are subject to freezing.
- Units must be installed in conditioned space that is not subject to extremes of temperature or humidity to avoid cabinet sweating and/or equipment damage. See Table 17 on page 66 for allowable ambient temperature ranges.
- Do not use units for temporary heating, air conditioning or ventilation during construction or remodeling, especially when plastering, sanding or painting or when replacing carpet or flooring. Dust and debris can clog the coil and blower. Chemical vapors can lead to formicary corrosion and damage the coil. Ensure adequate ventilation and debris collection during construction or remodeling.

PROTECTION

Once the units are properly positioned on the jobsite, cover them with either a shipping carton, vinyl film, or an equivalent protective covering. Cap open ends of pipes stored on the jobsite. This precaution is especially important in areas where painting, plastering, or spraying of fireproof material, etc. is not yet complete. Foreign material that accumulates within the units can prevent proper start-up and require costly clean-up operations. Before installing any of the system components, be sure to examine each pipe, fitting, and valve, and remove any dirt or foreign material found in or on these components.

IMPORTANT: Care must be taken to prevent the introduction of dust, paint, debris, or chemicals into the unit, which can cause damage to the unit, delay start-up, and may impact unit longevity.

TAKE APART CONSTRUCTION ASSEMBLY

Vertical units ordered with the take apart construction option will be constructed in a manner that allows for field splitting of the unit for ease of installation and rigging. The units are split into an air coil/fan section and a water coil/compressor section.

These units will ship as an assembled single piece with pre-cut interconnecting piping (including WSE piping if equipped) and coiled up blower motor wiring to be installed in the field. Wiring and interconnecting piping can be found in the air coil/fan section. Each section will be factory charged with nitrogen. Refrigerant must be provided and charged in the field per the unit's data plate (see Table 2). See take apart construction dimensional drawing for size and weights of the two sections.

DISASSEMBLY INSTRUCTION

The unit can be taken apart by removing the 4 brackets located on the corner posts between the two sections. See Fig. 20-23. Unscrew the brackets holding the two sections together (these can be completely removed from both sections). Keep brackets as they will be needed to secure after unit is installed.

NOTE: Do not place the top section flat on a solid floor as the drain stubs can be damaged and the seal broken.

ASSEMBLY INSTRUCTION

1. Locate the precut interconnecting piping and coiled blower wiring in the air coil/fan section of the unit.
2. Connect the blower motor wiring labeled 1, 2, 3. For units without a VFD the wiring to be connected in the field is the wiring from the blower to be connected to the Blower Relay (BR) terminals labeled T1, T2, T3. For units with a VFD the wiring to be connected in the field is the wiring from the VFD power terminal U1, V1, W1 to be connected to the TB2 terminals. See Fig. 24 and 25 for further details.
3. Install internal refrigerant pipes and external water pipes (if unit has water side economizer). These pre-cut components are shipped loose internal to the unit.
4. Unit is shipped with pressurized nitrogen, after field installation is complete charge the unit according to the unit's data plate. (see Table 2).

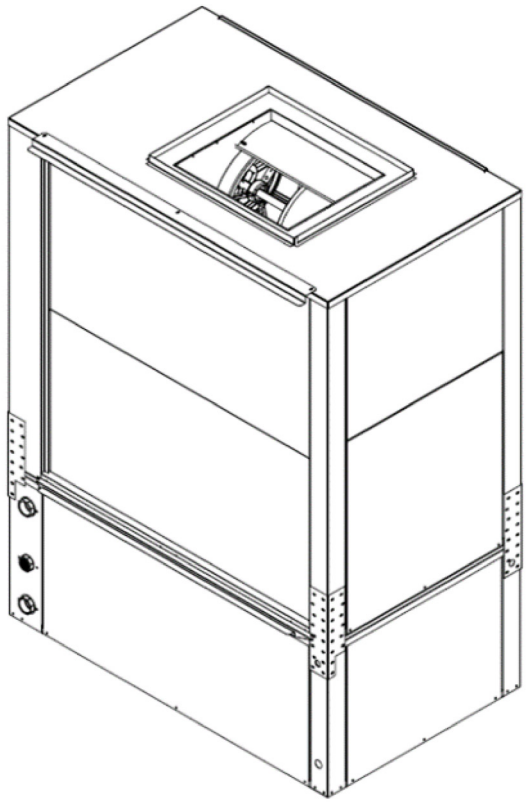

Fig. 23 — Take Apart Construction Assembly

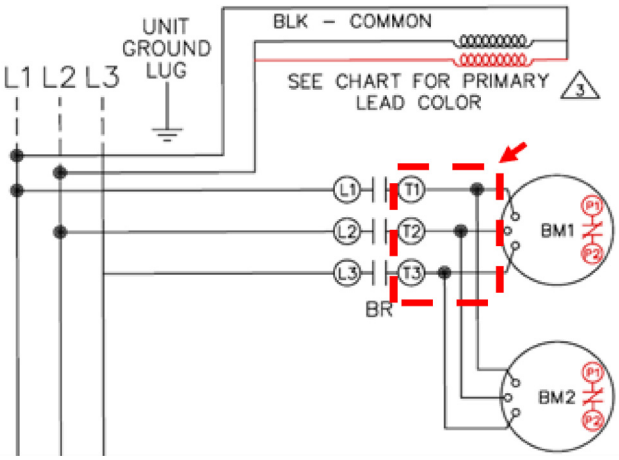

Fig. 24 — Take Apart Construction Wiring Connection, No VFD

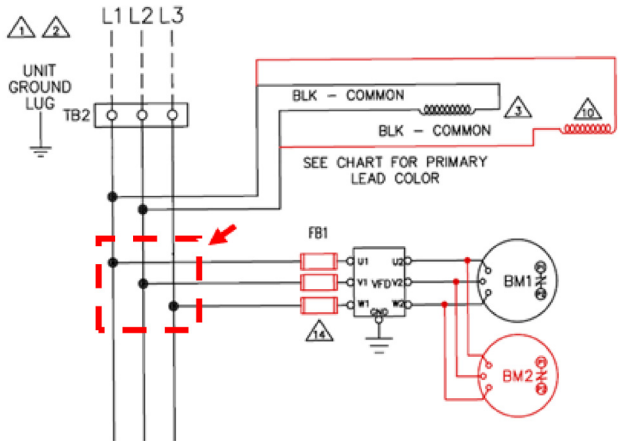

Fig. 25 — Take Apart Construction Wiring Connection, with VFD

Step 4 — Mount the Unit

⚠CAUTION

Remove all shipping blocks under blower housing. Loosen compressor mounting bolts. Failure to do so could result in equipment damage.

MOUNTING VERTICAL UNITS

Vertical units are available in front or rear return configurations. Vertical units should be mounted level on a vibration absorbing pad slightly larger than the base to minimize vibration transmission to the building structure. It is not necessary to anchor the unit to the floor unless required by local code. See Fig. 26.

All 50VQP units should be vibration isolated according to the design engineers' specifications.

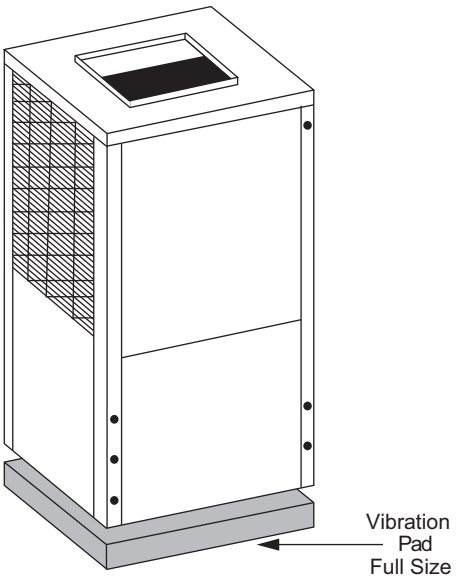

Fig. 26 — Vertical Unit on Vibration Pad

MOUNTING HORIZONTAL UNITS

While horizontal units may be installed on any level surface strong enough to hold their weight, they are typically suspended above a ceiling by threaded rods. The rods are usually attached to the unit corners. The rods must be securely anchored to the ceiling. All 50HQP units include an integral angle iron frame with mounting holes present. (See unit horizontal detail drawing.) Horizontal units installed above the ceiling must conform to all local codes. An auxiliary drain pan if required by code, should be at least four inches larger than the bottom of the heat pump. Plumbing connected to the heat pump must not come in direct contact with joists, trusses, walls, etc.

Some applications require an attic floor installation of the horizontal unit. In this case the unit should be set in a full size secondary drain pan on top of a vibration absorbing mesh. The secondary drain pan prevents possible condensate overflow or water leakage damage to the ceiling. The secondary drain pan is usually placed on a plywood base isolated from the ceiling joists by additional layers of vibration absorbing mesh. In both cases, a 3/4 in. drain connected to this secondary pan should be run to an eave at a location that will be noticeable. If the unit is located in a crawl space, the bottom of the unit must be at least 4 in. above grade to prevent flooding of the electrical parts due to heavy rains.

Step 5 — Check Duct System

A supply air outlet collar and return air duct flange are provided on all units to facilitate duct connections. Fold the duct flange outwards along the perforated line. Refer to Fig. 2-6 for physical dimensions of the collar and flange.

NOTE: All dual fan units (50HQP 120 and 180-242, 50VQP 210-360) must use a "pair of pants" duct configuration as shown in Fig. 27. Failure to follow these guidelines can result in fan system failure.

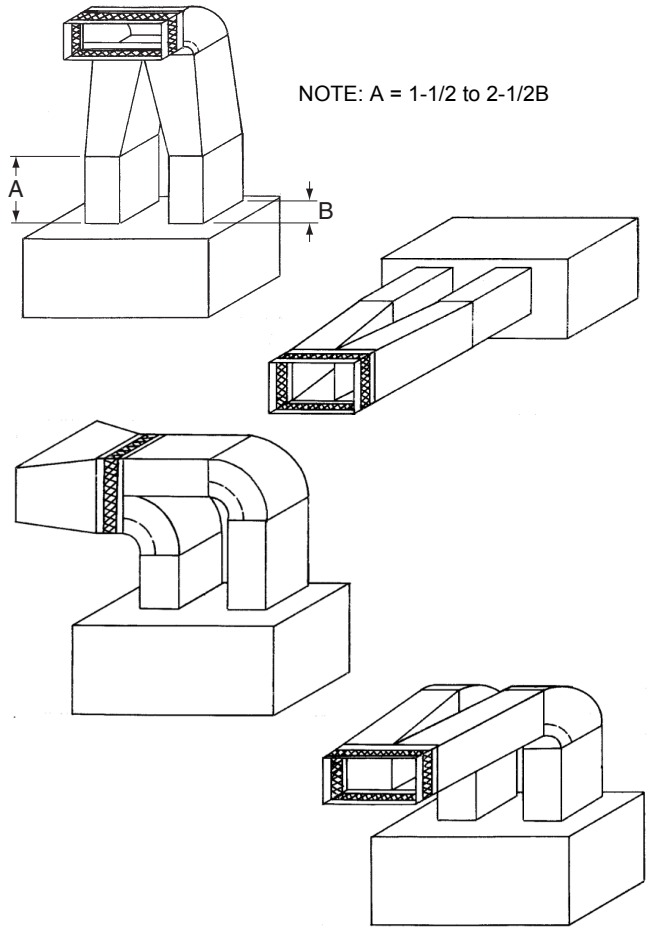

Fig. 27 — Typical Fan Discharge Connections for Multiple Fan Units

Refer to ASHRAE (American Society of Heating, Refrigerating and Air-Conditioning Engineers) standards for the recommended duct connection to units with 2 fans. An adequate straight length of ducting from the unit should be allowed before elbows are installed. Elbows should turn in the direction of fan rotation, if possible. Abrupt turns will generate air turbulence and excessive

noise. Turning vanes should be used in all short radius bends. Ensure that ducting does not obstruct access to the unit for routine servicing.

A flexible connector is recommended for supply and return air connections on metal duct systems. All metal ducting should be insulated with a minimum of one inch duct insulation to avoid heat loss or gain and prevent condensate forming during the cooling operation. Application of the unit to uninsulated duct work is not recommended as the unit's performance will be adversely affected. Do not connect discharge ducts directly to the blower outlet. The factory provided air filter must be removed when using a filter back return air grille. The factory filter should be left in place on a free return system. If the unit will be installed in a new installation with new ductwork, the installation should be designed using current ASHRAE (American Society of Heating, Refrigerating, and Air-Conditioning Engineers) procedures for duct sizing. If the unit will be connected to an existing duct system, a check should be made to assure that the duct system has the capacity to handle the air required for the unit application. If the duct system is too small, larger ductwork must be installed. Be certain to check for existing leaks and repair.

The duct system and all diffusers should be sized to handle the designed airflow quietly. To maximize sound attenuation of the unit blower, the supply and return air plenums should be insulated. There should be no direct straight air path through the return-air grille into the heat pump. The return air inlet to the heat pump must have at least one 90 degree turn away from the space return air grille. If air noise or excessive airflow are a problem, the blower speed can be changed to a lower speed to reduce airflow.

DUCT STATIC PRESSURE PROBE AND TUBING (VAV UNITS ONLY)

On VAV systems, the duct static pressure sensor is factory-supplied (ships inside control cabinet) and requires field installation and field provided tubing and pressure pick-up port. The pressure sensor low port should be left open to atmosphere.

The pressure sensor high port should be connected with tubing to a pressure pick up port. The pressure pick up port should be installed as close to 2/3 of the way down the duct system in a straight section of duct, away from any turning vanes, take offs, or areas in the duct that could feature turbulence.

Install the duct static pressure probe with the tip facing into the airflow. See Fig. 28.

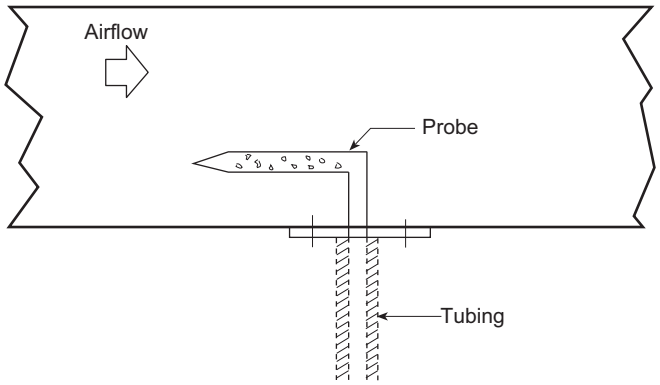

Fig. 28 — Duct Static Pressure Probe

Use 1/4 in. OD approved polyethylene tubing for up to 50 ft (3/8 in. OD for 50 to 100 ft) to connect the probe to the bulkhead fitting mounted above the unit display panel. Carefully route the tubing from the probe to this bulkhead fitting.

The static pressure control should be adjusted so that, at full airflow, all of the remote VAV terminal boxes receive the minimum static pressure required plus any downstream resistance. Control the system to the lowest static pressure set point that will satisfy airflow requirements. Lower static pressure set points reduce total required brake horsepower and reduce generated sound levels

DUCT HIGH-STATIC (DHS) LIMIT SWITCH (VAV ONLY)

The duct high static limit switch is a field provided mechanical safety that prevents duct over pressurization. The switch is optional and is field-provided.

IMPORTANT: Use tubing that complies with local codes. Improper location or installation of the supply duct pressure tubing will result in unsatisfactory unit operation and poor performance.

Step 6 — Install Condensate Drain

⚠ CAUTION

Verify condensate switch is installed in the lowest part of the drain pan, based on unit pitch. Condensate switch may need to be relocated from factory position.

A drain line must be connected to the heat pump and pitched away from the unit a minimum of 1/4-in. per foot to allow the condensate to flow away from the unit. 50VQP vertical units include one condensate drain. 50HQP horizontal units include two condensate drain connections to allow for field pitching based on installation requirements. Only one condensate drain connection should be used. Cap and seal the unused drain connection.

Units with waterside economizer include an additional condensate pan and drain as part of the economizer assembly. This drain must also be piped to a condensate line following the guidance above. NOTE: the waterside economizer condensate pan is not protected by a condensate overflow switch from the factory.

This connection must be in conformance with local plumbing codes. A trap must be installed in the condensate line to ensure free condensate flow. (Units are not internally trapped.) A vertical air vent is sometimes required to avoid air pockets. (See Fig. 29.) The length of the trap depends on the amount of positive or negative pressure on the drain pan.

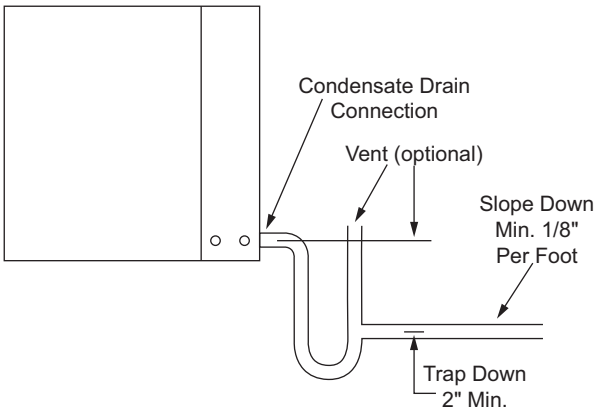

Fig. 29 — Condensate Trapping

A second trap must not be included. The horizontal unit should be pitched approximately 1/4-in. towards the drain in both directions, to facilitate condensate removal. See Fig. 30.

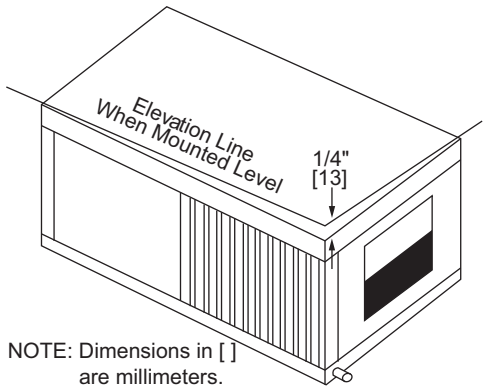

Fig. 30 — Sloped Horizontal Unit Installation

Step 7 — Pipe Connections

All WSHP units use female pipe thread fittings for water connections. Refer to Fig. 2-6 for connection sizes. When making piping connections, consider the following:

- Use a backup wrench when making screw connections to unit to prevent internal damage to piping.
- Insulation may be required on piping to avoid condensation in the case where fluid in loop piping operates at temperatures below dew point of adjacent air.
- Flexible hoses should be used between the unit and the rigid system to avoid possible vibration.
- Supply and return piping must be as large as the unit connections on the heat pump. Never use flexible hoses of a smaller inside diameter than that of the water connections on the unit.
- Piping systems that contain steel pipes or fittings may be subject to galvanic corrosion. Dielectric fittings may be used to isolate the steel parts of the system to avoid galvanic corrosion.
- Teflon®[1] tape thread sealant is recommended when connecting water piping connections to the units to ensure against leaks and possible heat exchanger fouling.
- Balancing valve and supply/return manual isolation valves must be provided for unit isolation and water flow balancing.
- Ensure unit receives the appropriate water flow during operation. To verify the correct water flow, utilize pressure/temperature ports positioned at the supply and return water lines. Refer to Fig. 61 on page 64 for water pressure drop across water to refrigerant heat exchanger.
- Avoid all plastic to metal threaded fittings due to the potential to leak. Use a flange fitted substitute.
- Route piping to avoid service access areas to unit.
- Flush the piping system prior to operation to remove dirt and foreign materials from the system.

WATER QUALITY GUIDELINES

Units are supplied with either a copper or optional cupronickel coaxial water coil. Copper is adequate for ground water that is not high in mineral content.

Carrier recommends proper testing to assure the well water quality is suitable for use with water source equipment. In conditions anticipating moderate scale formation or in brackish water a cupronickel heat exchanger is recommended. Additional considerations:

- A secondary heat exchanger (plate frame between the unit and the open cooling tower or open loop ground water system) may also be used. It is imperative that all air is eliminated from the closed loop side of the heat exchanger to prevent condenser fouling.
- In all applications, the quality of the water circulated through the heat exchanger must fall within the ranges listed in Table 4, Water Quality Guidelines. Consult a local water treatment firm, independent testing facility, or local water authority for specific recommendations to maintain water quality within the published limits

⚠ CAUTION

Water piping exposed to extreme, low ambient temperatures is subject to freezing.

INSTALLING SUPPLY AND RETURN HOSE KIT

Follow these piping guidelines:

1. Install a drain valve at the base of each supply and return riser to facilitate system flushing.
2. Install shutoff/balancing valves and unions at each unit to permit unit removal for servicing.
3. Place strainers at the inlet of each system circulating pump.
4. Select the proper hose length to allow slack between connection points. Hoses may vary in length by +2% to –4% under pressure.
5. Do not exceed the minimum bend radius for the hose selected. Refer to Table 3. Exceeding the minimum bend radius may cause the hose to collapse, which reduces water flow rate. Install an angle adapter to avoid sharp bends in the hose when the radius falls below the required minimum.

   NOTE: Piping must comply with all applicable codes.

Table 3 — Hose Dimensions

HOSE DIAMETER (in.)	MINIMUM BEND RADII (in.)
1.0	4-3/8
1.5	7-1/8
2.0	9-1/2

Insulation is not required on loop water piping except where the piping runs through unheated areas or outside the building or when the loop water temperature is below the minimum expected dew point of the pipe ambient. Insulation is required if loop water temperature drops below the dew point.

IMPORTANT: Do not bend or kink supply lines or hoses.

Pipe joint compound is not necessary when Teflon threaded tape is pre-applied to hose assemblies or when flared-end connections are used. If pipe joint compound is preferred, use compound only in small amounts on the male pipe threads of the fitting adapters. Prevent sealant from reaching the flared surfaces of the joint.

NOTE: When anti-freeze is used in the loop, assure that it is compatible with Teflon tape or pipe joint compound employed.

Maximum allowable torque for brass fittings is 30 ft-lb. If a torque wrench is not available, tighten finger-tight plus one quarter turn.

Tighten steel fittings as necessary.

Optional pressure-rated hose assemblies designed specifically for use with Carrier units are available. Similar hoses can be obtained from alternate suppliers. Supply and return hoses are fitted with swivel-joint fittings at one end to prevent kinking during installation.

⚠ CAUTION

Backup wrench is required when tightening water connections to prevent water line damage. Failure to use a backup wrench could result in equipment damage.

1.Third-party trademarks and logos are the property of their respective owners.

Male adapters secure hose assemblies to the unit and risers. Install hose assemblies properly and check them regularly to avoid system failure and reduced service life. See Fig. 31.

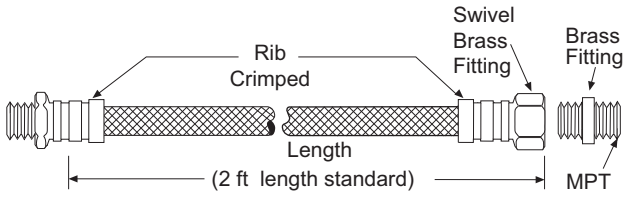

Fig. 31 — Supply/Return Hose Kit

UNITS WITH WATERSIDE ECONOMIZER

The optional waterside economizer (pre-cooling coil) is factory installed and piped internally, in series with the condenser water circuit (see Fig. 32). A diverting valve, motorized 3-way valve, aquastat with entering water temperature sensor, and factory controls are included with the option.

The remote bulb (EWT sensor) is shipped internal to the unit and requires installation on straight incoming water line to the unit, or into the 3-way diverting valve (see Fig. 32). Care should be taken not to dent the bulb or mis-calibration may occur. The remote sensing bulb must be installed on a straight section of uninsulated pipe that provides a good measurement of the entering water temperature. It is recommended to insulate the sensing bulb after installation for better water temperature sensing.

When unit is shipped with economizer option, the economizer drain must be connected to a separate trap. Follow the same steps for the economizer drain as described for evaporator condensate drain. (See Step 6 — Install Condensate Drain on page 32.)

Refer to Step 10 for Waterside economizer configuration with aquastat (without factory installed TruVu™ controller).

Refer to SCU Open controller guide or TruVu™ integration guide for configuring the entering water temperature set point for units with factory installed DDC controller.

See Fig. 7-18 on pages 14-25 for connection locations and sizes. Refer to the unit's performance report for additional water and air pressure drop.

UNITS WITH BOILERLESS HEAT CONTROL

Units with Boilerless Heat Control include entering water temperature sensor (remote sensing bulb) that must be field-installed on the incoming water piping. The remote sensing bulb must be installed on a straight section of uninsulated pipe that provides a good measurement of the entering water temperature. It is recommended to insulate the sensing bulb after installation for better water temperature sensing.

Refer to Step 10 for Boilerless control configuration with aquastat (without factory installed TruVu™ controller).

Refer to the TruVu™ integration guide for configuring the entering water temperature set point for boilerless control operation for units with TruVu™ controller.

UNITS WITH HOT WATER COIL

The hot water coil package includes a factory-installed 1 or 2-row hot water coil and pipe connections on the side of the unit. See dimensional drawings for connection sizes. (See Fig. 17-18 on pages 24-25 for details.)

NOTE: The hot water coil requires a separate pipe connection, field provided and installed control valves and strainer, and field wired to the controller of the unit.

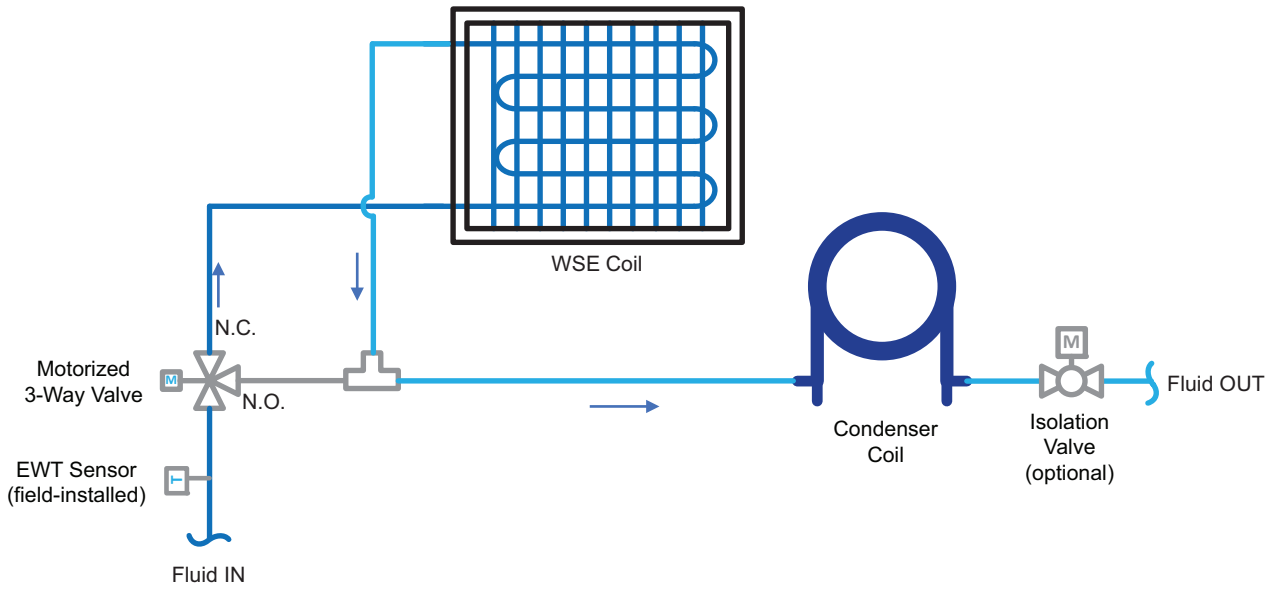

Fig. 32 — WSE Diagram

Table 4 — Water Quality Guidelines

CONDITION	HX MATERIAL[a]	CLOSED RECIRCULATING[b]	OPEN LOOP AND RECIRCULATING WELL[c]		
Scaling Potential — Primary Measurement **Above the given limits, scaling is likely to occur. Scaling indexes should be calculated using the limits below.**					
pH/Calcium Hardness Method	**All**	**N/A**	**pH < 7.5 and Ca Hardness, <100 ppm**		
Index Limits for Probable Scaling Situations (Operation outside these limits is not recommended.)					
Scaling indexes should be calculated at 150°F for direct use and HWG applications, and at 90°F for indirect HX use. A monitoring plan should be implemented.					
Ryznar Stability Index	All	N/A	6.0 - 7.5 If >7.5 minimize steel pipe use.		
Langelier Saturation Index	All	N/A	–0.5 to +0.5 If <–0.5 minimize steel pipe use. Based upon 150°F HWG and direct well, 85°F indirect well HX.		
Iron Fouling					
Iron Fe^{2+} (Ferrous) (Bacterial Iron Potential)	All	N/A	<0.2 ppm (Ferrous) If Fe^{2+} (ferrous) >0.2 ppm with pH 6 - 8, O_2<5 ppm check for iron bacteria.		
Iron Fouling	All	N/A	<0.5 ppm of Oxygen Above this level deposition will occur.		
Corrosion Prevention[d]					
pH	All	6 - 8.5 Monitor/treat as needed.	6 - 8.5 Minimize steel pipe below 7 and no open tanks with pH <8.		
Hydrogen Sulfide (H_2S)	All	N/A	<0.5 ppm At H_2S>0.2 ppm, avoid use of copper and cupronickel piping or HXs. Rotten egg smell appears at 0.5 ppm level. Copper alloy (bronze or brass) cast components are okay to <0.5 ppm.		
Ammonia Ion as Hydroxide, Chloride, Nitrate and Sulfate Compounds	All	N/A	<0.5 ppm		
Maximum Chloride Levels			Maximum allowable at maximum water temperature.		
			50°F (10°C)	75°F (24°C)	100°F (38°C)
	Copper	N/A	<20 ppm	NR	NR
	Cupronickel	N/A	<150 ppm	NR	NR
	304 SS	N/A	<400 ppm	<250 ppm	<150 ppm
	316 SS	N/A	<1000 ppm	<550 ppm	<375 ppm
	Titanium	N/A	>1000 ppm	>550 ppm	>375 ppm
Erosion and Clogging					
Particulate Size and Erosion	All	<10 ppm of particles and a maximum velocity of 6 fps. Filtered for maximum 800 micron size.	<10 ppm (<1 ppm “sandfree” for reinjection) of particles and a maximum velocity of 6 fps. Filtered for maximum 800 micron size. Any particulate that is not removed can potentially clog components.		
Brackish	All	N/A	Use cupronickel heat exchanger when concentrations of calcium or sodium chloride are greater than 125 ppm are present. (Seawater is approximately 25,000 ppm.)		

NOTE(S):

a. Heat exchanger materials considered are copper, cupronickel, 304 SS (stainless steel), 316 SS, titanium.
b. Closed recirculating system is identified by a closed pressurized piping system.
c. Recirculating open wells should observe the open recirculating design considerations.
d. If the concentration of these corrosives exceeds the maximum allowable level, then the potential for serious corrosion problems exists. Sulfides in the water quickly oxidize when exposed to air, requiring that no agitation occur as the sample is taken. Unless tested immediately at the site, the sample will require stabilization with a few drops of one Molar zinc acetate solution, allowing accurate sulfide determination up to 24 hours after sampling. A low pH and high alkalinity can cause system problems, even when both values are within ranges shown. The term pH refers to the acidity, basicity, or neutrality of the water supply. Below 7.0, the water is considered to be acidic. Above 7.0, water is considered to be basic. Neutral water registers a pH of 7.0. To convert ppm to grains per gallon, divide by 17. Hardness in mg/l is equivalent to ppm.

LEGEND

HWG — Hot Water Generator
HX — Heat Exchanger
N/A — Design Limits Not Applicable Considering Recirculating Potable Water
NR — Application Not Recommended
SS — Stainless Steel

Step 8 — Wire Field Power Supply

See Tables 5-8 for electrical data and Fig. 37-49 for typical wiring diagrams.

See Fig. 2-6 for cabinet electrical wiring points. See typical wiring diagrams starting on page 45. Unit will ship with wiring diagram affixed to the inside of the unit control panel.

HIGH VOLTAGE WIRING

All field-installed wiring must comply with the National Electric Code as well as all applicable local codes. Refer to the unit electrical data on the unit nameplate for wire and branch circuit protection sizing. Supply power voltage and phasing should match the required voltage and phasing shown on the unit nameplate. Operating the unit below the minimum voltage, above the maximum voltage or with incorrect phasing can result in poor system performance or damage to the heat pump. All field wiring should be installed by qualified and trained personnel. Refer to the unit wiring diagram for field connection requirements.

Power wiring to the heat pump should be enclosed in flexible conduit to minimize the transmission of vibration from the unit cabinet to the building.

For heat pumps with unit mounted disconnect switches, field power should be connected to the marked terminals on the disconnect switch. For heat pumps without unit-mounted disconnect switches (except units with dual power supply), power is connected to the line (L) side of the compressor contactor and the ground lug in the unit electrical box.

CONTROL TRANSFORMER SETTING FOR 208V UNITS

As factory built, all 208/230-v units are wired for 230-v operation. For job sites with a 208-v power supply, the primary leads on the unit transformer will need to be changed from 230-v to 208-v. Refer to the unit wiring diagram for details.

50HQP WITH SUPPLY FAN VFD

Units with the VFD option include a VFD that ships loose for field installation. See Fig. 36 for field power wiring for VFD. Use the following guidance for VFD installation:

NOTE: Installation must adhere to local codes and requirements.

1. Remove the VFD from the unit shipping storage location. See Fig. 22.
2. Remove the VFD Box cover and locate the ABB VFD installation manual.
3. Inspect the VFD and VFD Fuse Block. Ensure the fuses are secured inside the VFD box. See Fig. 33 and 34.
4. Mount the VFD box using the mounting brackets to a suitable remote mounting location. See Fig. 35.
5. Disconnect unit power and remove the compressor and electrical control box accesses panel on the unit. See Fig. 36.
6. Make field wiring connections between terminal block 3 (TB3) (located in the unit electrical control box) and VFD fuse block (FB1) (located in the VFD enclosure).
7. Make field wiring connections between terminals (U1, V1, W1). Both located within VFD enclosure.
8. Make field wiring connections between VFD output terminals (U2, V2, W2) (located in VFD enclosure) and terminal block 4 (TB4) (located in the unit electrical control box).

NOTE: All remote VFD field wiring must be installed per local codes and requirements. See Fig. 37-51 for typical wiring diagrams.

⚠ WARNING

To avoid possible injury or death due to electrical shock, open the power supply disconnect switch and secure it in an open position during installation.

⚠ CAUTION

All power connections must be properly torqued to avoid the risk of overheating.

⚠ CAUTION

The power supply ground wire should never be used as a neutral wire.

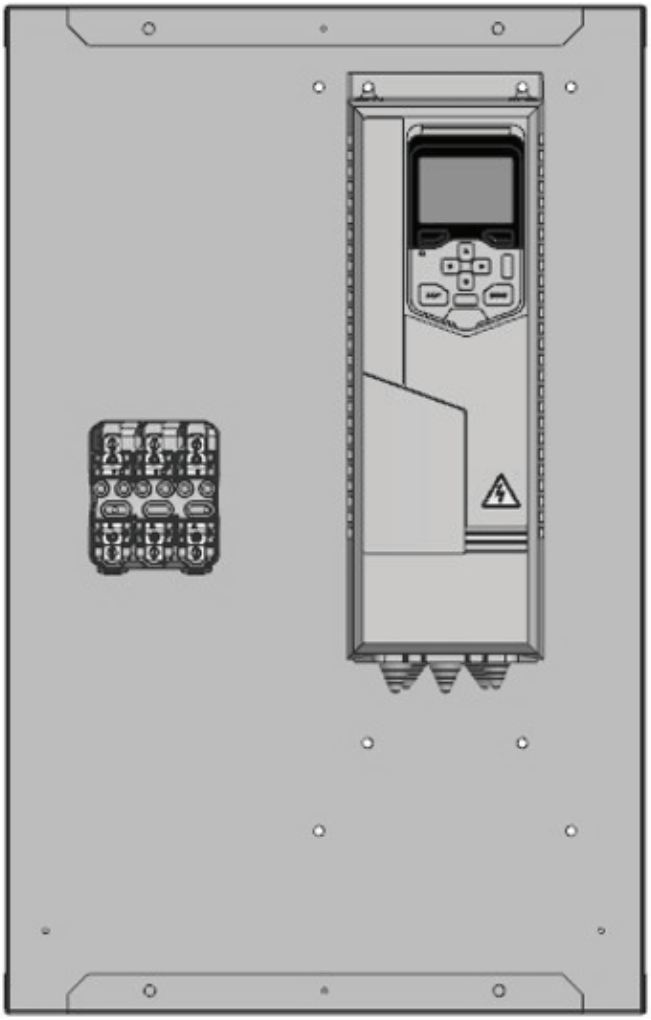

Fig. 33 — Remote VFD Enclosure Components, 50HQP Units

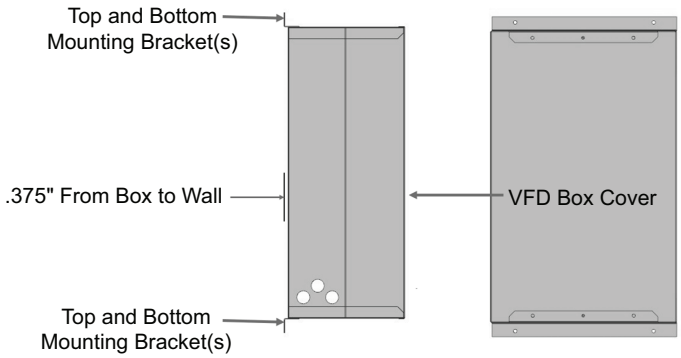

Fig. 34 — Remote VFD Enclosure Mounting, 50HQP Units

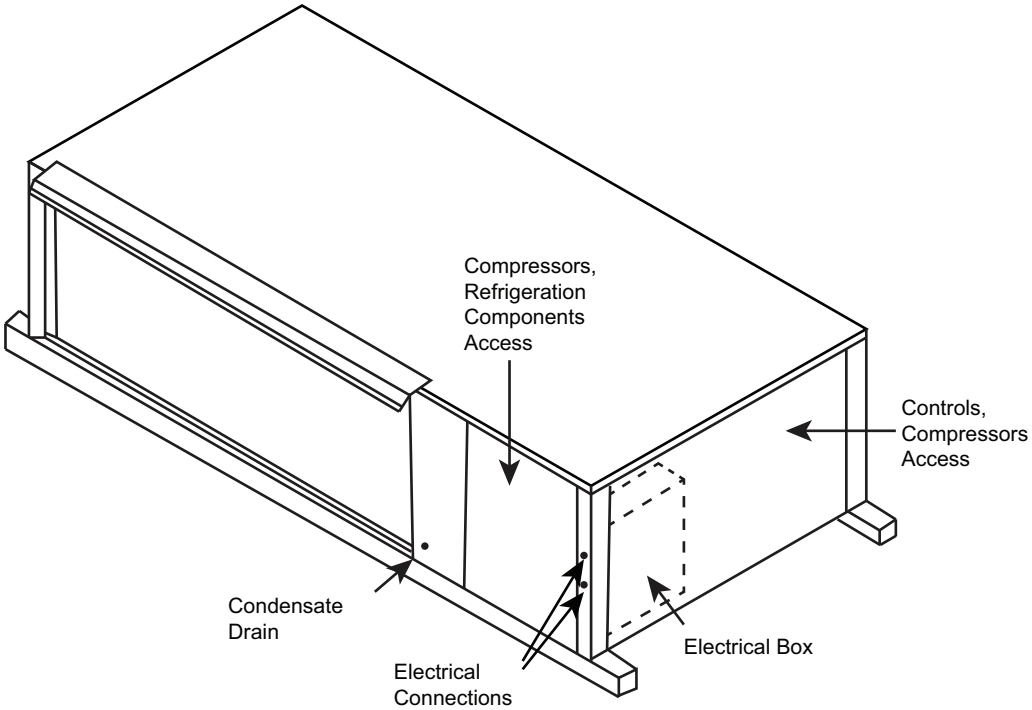

Fig. 35 — Electrical Control Box Location, 50HQP Units

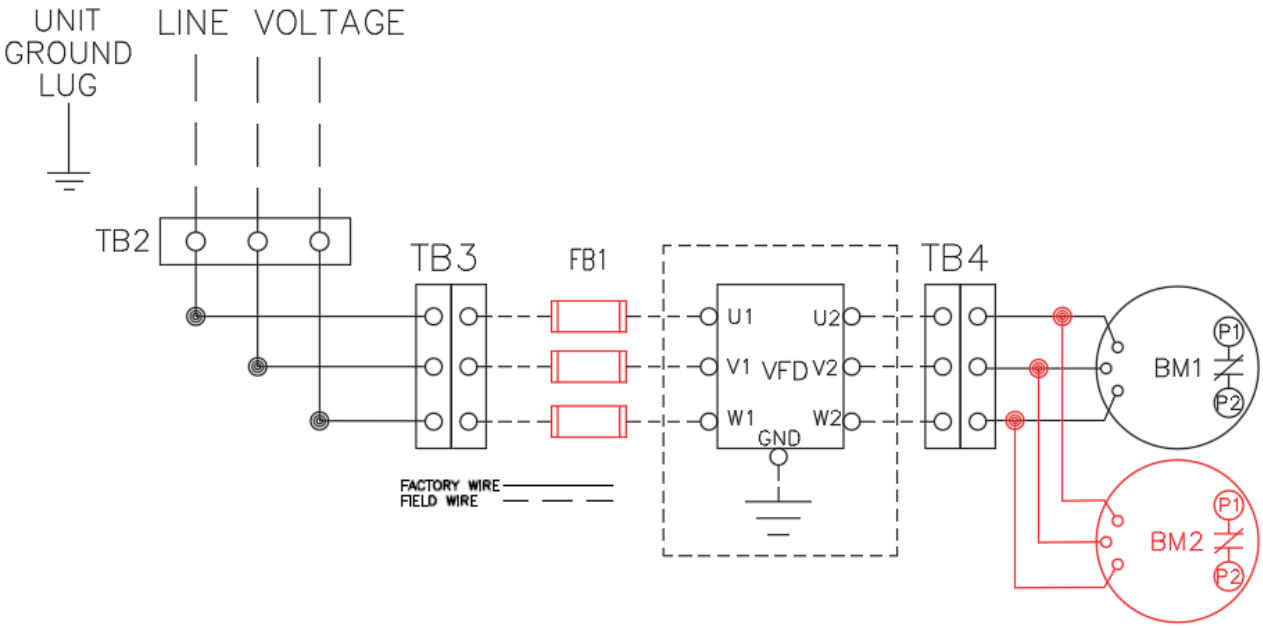

Fig. 36 — VFD Input and Output Power Connections, 50HQP Units

STATUS LED/ALARM BLINK CODES	
1	HIGH PRESSURE FAULT – CKT 1
2	LOW PRESSURE FAULT – CKT 1
3	HIGH PRESSURE FAULT – CKT 2
4	LOW PRESSURE FAULT – CKT 2
5	FREEZE SENSOR 1 FAULT
6	CONDENSATE FAULT
7	BROWN OUT FAULT
8	FREEZE SENSOR 2 FAULT
9	FREEZE SENSOR 3 FAULT
10	FREEZE SENSOR 4 FAULT
11	REFRIGERANT LEAK FAULT
12	2ND STAGE COMMUNICATION FAULT

COLOR CHART LEGEND	
ABBREVIATION	COLOR
BK	BLACK
BL	BLUE
BN	BROWN
GY	GRAY
GN	GREEN
OG	ORANGE
RD	RED
VT	VIOLET
WT	WHITE
YL	YELLOW

FACTORY WIRE ————

FIELD WIRE — — —

STANDARD COMPONENTS LEGEND:

#1 – FIRST STAGE
#2 – SECOND STAGE
A2L – AIR TO LIQUID REFRIGERANT LEAK SENSOR
BC – BLOWER CAPACITOR
BM – BLOWER MOTOR
BR – BLOWER RELAY
CS – CONDENSATE SENSOR (1 PER DRAIN PAN)
CC – COMPRESSOR CONTACTOR
CBR – 24VAC CIRCUIT BREAKER
FS – FREEZE SENSOR
HPS – HIGH PRESSURE SWITCH
LPS – LOW PRESSURE SWITCH
RV – REVERSING VALVE (HEAT PUMPS ONLY)
TB2 – TERMINAL BLOCK (HIGH VOLTAGE)

OPTIONAL COMPONENTS LEGEND:

[ ] AUX – AUXILIARY RELAY (FOR LOOP PUMP, ETC.)
[ ] BMR – BLOWER MONITOR RELAY
[ ] CMR – COMPRESSOR MONITOR RELAY
[ ] EMS – ENERGY MGMT SYSTEM RELAY
[ ] HSL – HIGH TEMPERATURE SUCTION LIMIT (WITH HGBP ONLY)

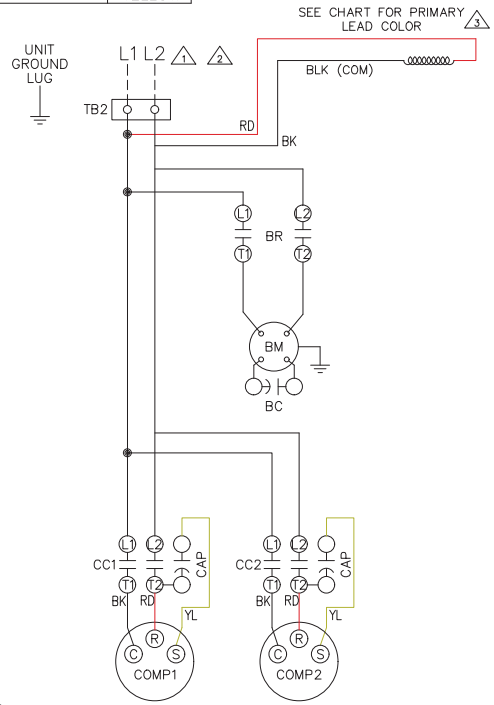

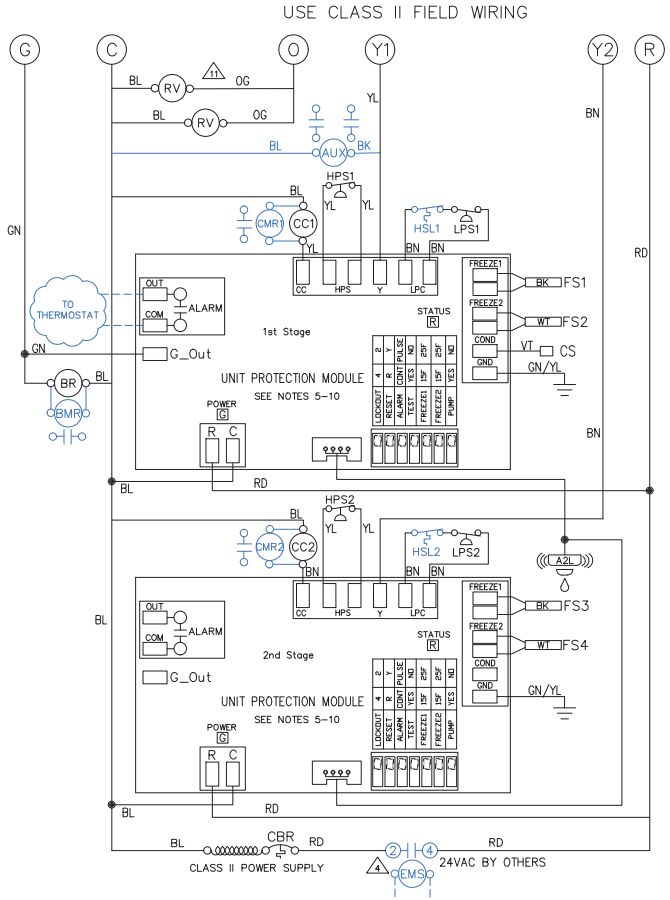

NOTES:

1. SEE UNIT NAME PLATE FOR ELECTRICAL RATING
2. ALL FIELD WIRING MUST BE IN ACCORDANCE WITH N.E.C.–N.F.P.A. #70, COPPER CONDUCTORS ONLY. CONDUCTEURS EN CUIVRE SEULEMENT.
3. 208/230V UNITS ARE FACTORY WIRED FOR 230V OPERATION. FOR 208V OPERATION, REMOVE 240V LEAD AND CONNECT IT TO 208V. CAP ALL UNUSED LEADS.
4. FOR ALTERNATE EMS COIL VOLTAGES CONSULT FACTORY.
5. UPM–I INCLUDES BUILT IN: 270–300 SECOND RANDOM START
   300 SECOND DELAY ON BREAK
   120 SECOND LOW PRESSURE BYPASS
   120 SECOND FREEZE PROTECTION BYPASS
6. "TEST" DIP SWITCH REDUCES DELAYS TO 10 SEC WHEN SET TO YES. MUST BE SET TO "NO" FOR NORMAL OPERATION.
7. "FREEZE SENSOR" ON CONDENSER WILL BE SET TO 25°F BY DEFAULT. IF 15°F OPERATION IS REQUIRED, MOVE DIP SWITCH SLIDER TO THE 15°F POSITION.
8. "ALARM OUTPUT" DIP SWITCH MUST BE SET TO "PULSE" IF BLINKING T–STAT SERVICE LIGHT IS DESIRED.
9. DEFAULT SETTINGS FOR UPM BOARD FROM FACTORY SHOWN. ALSO SEE INSTALLATION MANUAL.
10. ALARM OUTPUT IS NORMALLY OPEN (NO) DRY CONTACT. IF 24 VAC IS NEEDED, CONNECT R TO ALR–COM TERMINAL, 24VAC WILL BE SENSED ON THE ALR–OUT WHEN THE UNIT IS IN ALARM CONDITION. OUTPUT WILL BE PULSED IF PULSE IS SELECTED.
11. REVERSING VALVES AND/OR RELAYS ARE NOT PRESENT IN STRAIGHT COOL UNITS.

8733838207

Fig. 37 — Wiring Diagram — 50H/VQP 6-10 Ton Capacity, Single Phase, Constant Volume Unit

STATUS LED/ALARM BLINK CODES	
1	HIGH PRESSURE FAULT – CKT 1
2	LOW PRESSURE FAULT – CKT 1
3	HIGH PRESSURE FAULT – CKT 2
4	LOW PRESSURE FAULT – CKT 2
5	FREEZE SENSOR 1 FAULT
6	CONDENSATE FAULT
7	BROWN OUT FAULT
8	FREEZE SENSOR 2 FAULT
9	FREEZE SENSOR 3 FAULT
10	FREEZE SENSOR 4 FAULT
11	REFRIGERANT LEAK FAULT
12	2ND STAGE COMMUNICATION FAULT

COLOR CHART LEGEND	
ABBREVIATION	COLOR
BK	BLACK
BL	BLUE
BN	BROWN
GY	GRAY
GN	GREEN
OG	ORANGE
RD	RED
VT	VIOLET
WT	WHITE
YL	YELLOW

FACTORY WIRE ————
FIELD WIRE — — —

STANDARD COMPONENTS LEGEND:
#1 – FIRST STAGE
#2 – SECOND STAGE
A2L – AIR TO LIQUID REFRIGERANT LEAK SENSOR
BC – BLOWER CAPACITOR
BM1 – BLOWER MOTOR (1 OR 2 PER UNIT)
BR – BLOWER RELAY
CS – CONDENSATE SENSOR (1 PER DRAIN PAN)
CC – COMPRESSOR CONTACTOR
CBR – 24VAC CIRCUIT BREAKER
FS – FREEZE SENSOR
HPS – HIGH PRESSURE SWITCH
LPS – LOW PRESSURE SWITCH
RV – REVERSING VALVE (HEAT PUMPS ONLY)
TB2 – TERMINAL BLOCK (HIGH VOLTAGE)

OPTIONAL COMPONENTS LEGEND:
[ ] AQS – AQUASTAT (ECONOMIZER)
[ ] BCA – BOILERLESS CONTROL ACQUASTAT
[ ] BCR – BOILERLESS CONTROL RELAY
[ ] BMR – BLOWER MONITOR RELAY
[ ] CMR – COMPRESSOR MONITOR RELAY
[ ] CR – COOLING/HEATING RELAY
[ ] ER – ECONOMIZER RELAY
[ ] EMS – ENERGY MGMT SYSTEM RELAY
[ ] HGV – HOT GAS SOLENOID VALVES
[ ] HR – HEATING/COOLING RELAY
[ ] HSL – HIGH TEMPERATURE SUCTION LIMIT (WITH HGBP ONLY)
[ ] MBV – MOTORIZED BALL VALVE (ECONOMIZER)
[ ] MVR – MOTORIZED BALL VALVE RELAY (ECONOMIZER)
[ ] RH1 – REHEAT RELAY 1
[ ] RH2 – REHEAT RELAY 2

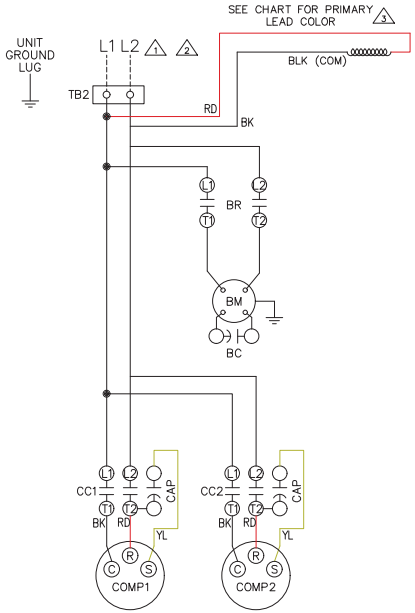

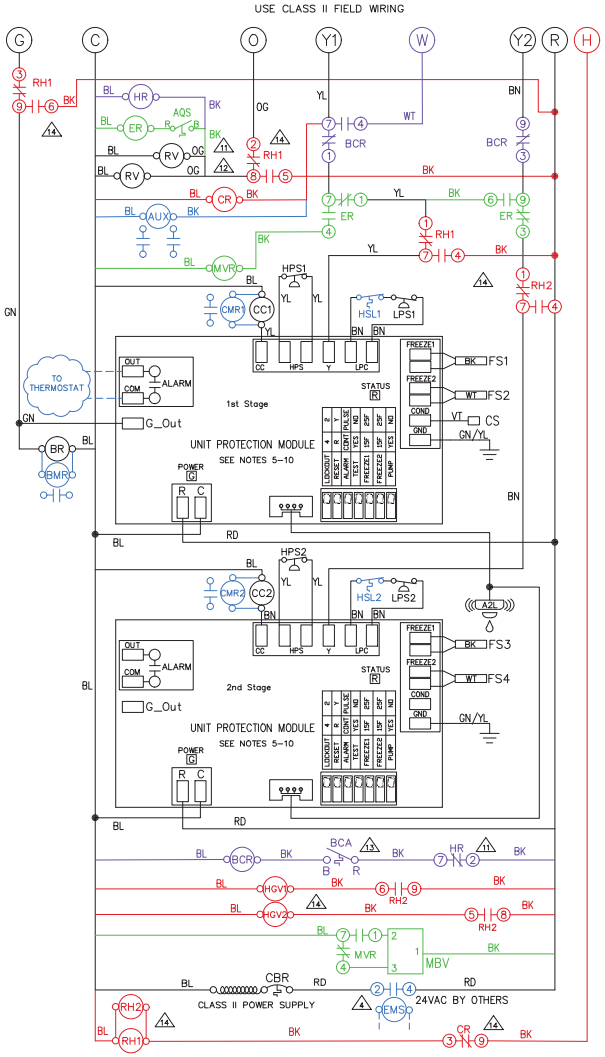

NOTES:
1. SEE UNIT NAME PLATE FOR ELECTRICAL RATING
2. ALL FIELD WIRING MUST BE IN ACCORDANCE WITH N.E.C.–N.F.P.A. #70, COPPER CONDUCTORS ONLY. CONDUCTEURS EN CUIVRE SEULEMENT.
3. 208/230V UNITS ARE FACTORY WIRED FOR 230V OPERATION. FOR 208V OPERATION, REMOVE 240V LEAD AND CONNECT IT TO 208V. CAP ALL UNUSED LEADS.
4. FOR ALTERNATE EMS COIL VOLTAGES CONSULT FACTORY.
5. UPM–I INCLUDES BUILT IN: 270–300 SECOND RANDOM START
   300 SECOND DELAY ON BREAK
   120 SECOND LOW PRESSURE BYPASS
   120 SECOND FREEZE PROTECTION BYPASS
6. "TEST" DIP SWITCH REDUCES DELAYS TO 10 SEC WHEN SET TO YES. MUST BE SET TO "NO" FOR NORMAL OPERATION.
7. "FREEZE SENSOR" ON CONDENSER WILL BE SET TO 25°F BY DEFAULT. IF 15°F OPERATION IS REQUIRED, MOVE DIP SWITCH SLIDER TO THE 15°F POSITION.
8. "ALARM OUTPUT" DIP SWITCH MUST BE SET TO "PULSE" IF BLINKING T–STAT SERVICE LIGHT IS DESIRED.
9. DEFAULT SETTINGS FOR UPM BOARD FROM FACTORY SHOWN. ALSO SEE INSTALLATION MANUAL.
10. ALARM OUTPUT IS NORMALLY OPEN (NO) DRY CONTACT. IF 24 VAC IS NEEDED, CONNECT R TO ALR–COM TERMINAL, 24VAC WILL BE SENSED ON THE ALR–OUT WHEN THE UNIT IS IN ALARM CONDITION. OUTPUT WILL BE PULSED IF PULSE IS SELECTED.
11. REVERSING VALVES AND/OR RELAYS ARE NOT PRESENT IN STRAIGHT COOL UNITS. HR WILL NOT BE PRESENT. AQS AND/OR CR ARE CONNECTED TO Y1.
12. AQS CONTACTS R–B CLOSE WHEN ENTERING WATER TEMPERATURE IS BELOW SETPOINT OF AQS.
13. BCA CONTACTS R–Y OPEN ON DROP IN WATER TEMPERATURE AND R–B CLOSE.
14. CR AND RH RELAYS ARE NOT PRESENT ON UNITS WITH DDC. H IS CONNECTED DIRECTLY TO HOT GAS VALVES.

8733838208

Fig. 38 — Wiring Diagram — 50H/VQP 6-10 Ton Capacity, Single Phase, Constant Volume Unit, Options (WSE, HGRH, HGBP, BE, SR, EMS, PR)

STATUS LED/ALARM BLINK CODES	
1	HIGH PRESSURE FAULT – CKT 1
2	LOW PRESSURE FAULT – CKT 1
3	HIGH PRESSURE FAULT – CKT 2
4	LOW PRESSURE FAULT – CKT 2
5	FREEZE SENSOR 1 FAULT
6	CONDENSATE FAULT
7	BROWN OUT FAULT
8	FREEZE SENSOR 2 FAULT
9	FREEZE SENSOR 3 FAULT
10	FREEZE SENSOR 4 FAULT
11	REFRIGERANT LEAK FAULT
12	2ND STAGE COMMUNICATION FAULT

COLOR CHART LEGEND	
ABBREVIATION	COLOR
BK	BLACK
BL	BLUE
BN	BROWN
GY	GRAY
GN	GREEN
OG	ORANGE
RD	RED
VT	VIOLET
WT	WHITE
YL	YELLOW

FACTORY WIRE ————

FIELD WIRE — — —

STANDARD COMPONENTS LEGEND:

#1 – FIRST STAGE
#2 – SECOND STAGE
A2L – AIR TO LIQUID REFRIGERANT LEAK SENSOR
BC – BLOWER CAPACITOR
BM – BLOWER MOTOR
BMR – BLOWER MONITOR RELAY
BR – BLOWER RELAY
CS – CONDENSATE SENSOR (1 PER DRAIN PAN)
CC – COMPRESSOR CONTACTOR
CBR – 24VAC CIRCUIT BREAKER
CMR – COMPRESSOR MONITOR RELAY
FS – FREEZE SENSOR
HPS – HIGH PRESSURE SWITCH
LPS – LOW PRESSURE SWITCH
RV – REVERSING VALVE (HEAT PUMPS ONLY)
TB2 – TERMINAL BLOCK (HIGH VOLTAGE)

OPTIONAL COMPONENTS LEGEND:

[ ] HGV – HOT GAS SOLENOID VALVES
[ ] HSL – HIGH TEMPERATURE SUCTION LIMIT (WITH HGBP ONLY)
[ ] MBV – MOTORIZED BALL VALVE (ECONOMIZER)
[ ] MVR – MOTORIZED BALL VALVE RELAY (ECONOMIZER)

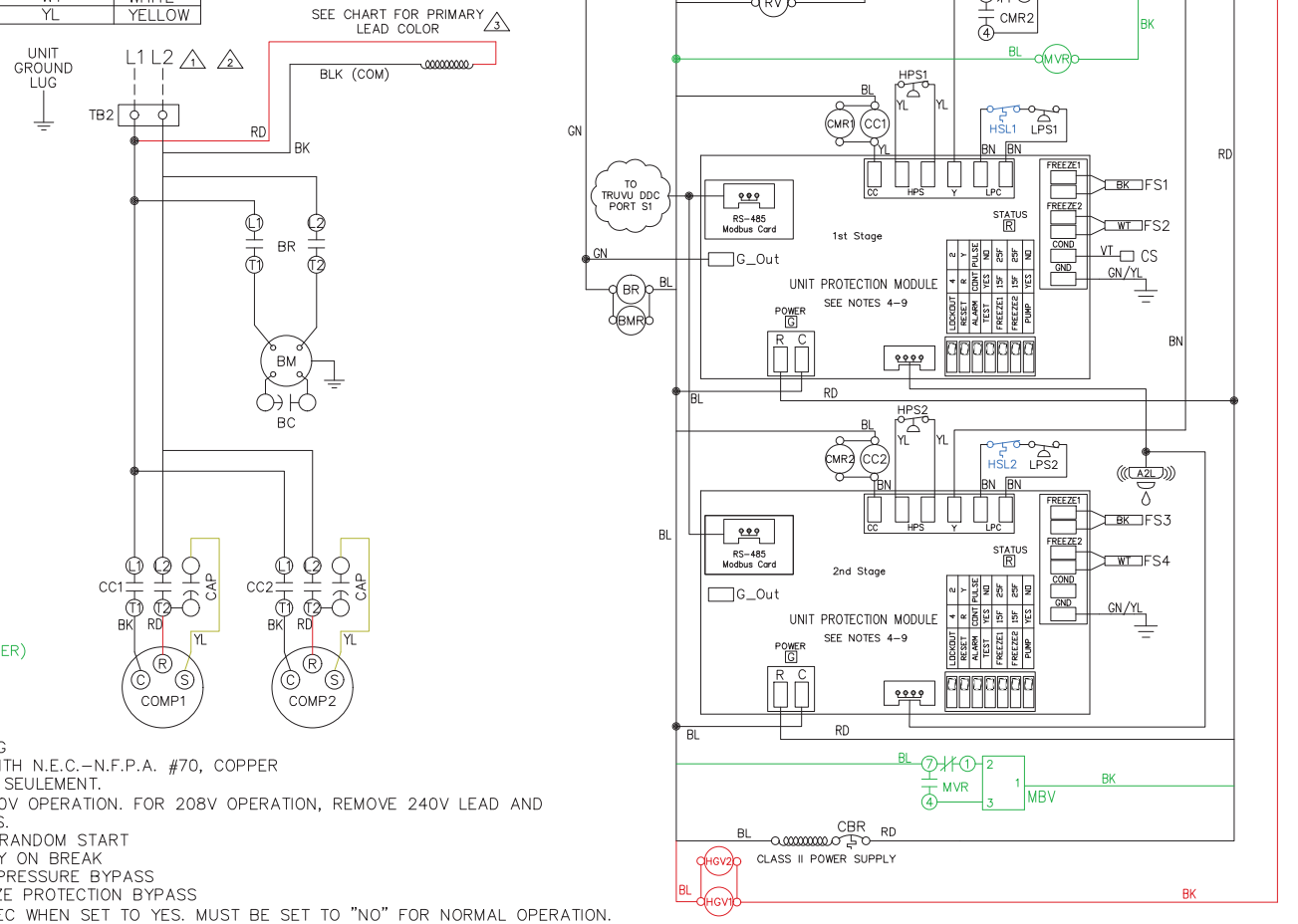

NOTES:

1. SEE UNIT NAME PLATE FOR ELECTRICAL RATING
2. ALL FIELD WIRING MUST BE IN ACCORDANCE WITH N.E.C.–N.F.P.A. #70, COPPER CONDUCTORS ONLY. CONDUCTEURS EN CUIVRE SEULEMENT.
3. 208/230V UNITS ARE FACTORY WIRED FOR 230V OPERATION. FOR 208V OPERATION, REMOVE 240V LEAD AND CONNECT IT TO 208V. CAP ALL UNUSED LEADS.
4. UPM–I INCLUDES BUILT IN: 270–300 SECOND RANDOM START
   300 SECOND DELAY ON BREAK
   120 SECOND LOW PRESSURE BYPASS
   120 SECOND FREEZE PROTECTION BYPASS
5. "TEST" DIP SWITCH REDUCES DELAYS TO 10 SEC WHEN SET TO YES. MUST BE SET TO "NO" FOR NORMAL OPERATION.
6. "FREEZE SENSOR" ON CONDENSER WILL BE SET TO 25°F BY DEFAULT. IF 15°F OPERATION IS REQUIRED, MOVE DIP SWITCH SLIDER TO THE 15°F POSITION.
7. "ALARM OUTPUT" DIP SWITCH MUST BE SET TO "PULSE" IF BLINKING T–STAT SERVICE LIGHT IS DESIRED.
8. DEFAULT SETTINGS FOR UPM BOARD FROM FACTORY SHOWN. ALSO SEE INSTALLATION MANUAL.
9. REVERSING VALVES AND/OR RELAYS ARE NOT PRESENT IN STRAIGHT COOL UNITS.
10. CMR CONNECTOR FROM DDC HARNESS WILL BE CONNECTED ACROSS PINS 4 AND 6 OF CMR1 WITH DDC SIGNAL CMR–4 GOING TO PIN GOING TO PIN 4 AND DDC SIGNAL CMR–2 GOING TO PIN 6.

8733838209

Fig. 39 — Wiring Diagram — 50H/VQP 6-10 Ton Capacity, Single Phase, Constant Volume Unit, Options (WSE, HGRH, HGBP), TruVu™ DDC

STATUS LED/ALARM BLINK CODES	
1	HIGH PRESSURE FAULT – CKT 1
2	LOW PRESSURE FAULT – CKT 1
3	HIGH PRESSURE FAULT – CKT 2
4	LOW PRESSURE FAULT – CKT 2
5	FREEZE SENSOR 1 FAULT
6	CONDENSATE FAULT
7	BROWN OUT FAULT
8	FREEZE SENSOR 2 FAULT
9	FREEZE SENSOR 3 FAULT
10	FREEZE SENSOR 4 FAULT
11	REFRIGERANT LEAK FAULT
12	2ND STAGE COMMUNICATION FAULT

COLOR CHART LEGEND	
ABBREVIATION	COLOR
BK	BLACK
BL	BLUE
BN	BROWN
GY	GRAY
GN	GREEN
OG	ORANGE
RD	RED
VT	VIOLET
WT	WHITE
YL	YELLOW

FACTORY WIRE ————

FIELD WIRE — — —

STANDARD COMPONENTS LEGEND:

#1 - FIRST STAGE
#2 - SECOND STAGE
A2L - AIR TO LIQUID REFRIGERANT LEAK SENSOR
AMR - A2L MITIGATION RELAY
BM1 - BLOWER MOTOR (1 OR 2 PER UNIT)
CBR - 24VAC CIRCUIT BREAKER
CC - COMPRESSOR CONTACTOR
CS - CONDENSATE SENSOR (1 PER DRAIN PAN)
FS - FREEZE SENSOR
HBR - HEATING BLOWER RELAY
HPS - HIGH PRESSURE SWITCH
LPS - LOW PRESSURE SWITCH
P1,P2 - BLOWER MOTOR PROTECTION (INVERTER BLOWERS ONLY)
RV - REVERSING VALVE (HEAT PUMPS ONLY)
SSR - START/STOP RELAY
TB2 - TERMINAL BLOCK (HIGH VOLTAGE)
VFD - VARIABLE FREQUENCY DRIVE
Y2R - 2ND STAGE RELAY

OPTIONAL COMPONENTS LEGEND:

[ ] BM2 - BLOWER MOTOR
[ ] BMR - BLOWER MONITOR RELAY
[ ] CMR - COMPRESSOR MONITOR RELAY
[ ] CPM - COMPRESSOR PROTECTION MODULE (15 TON AND LARGER COMPRESSORS)
[ ] FB1 - VFD FUSE BLOCK (WITH ACH580 MODEL ONLY)
[ ] FB2, FB3 - FUSE BLOCK (15 TON AND LARGER COMPRESSORS)
[ ] HSL - HIGH TEMPERATURE SUCTION LIMIT (WITH HGBP ONLY)
[ ] RVR - REVERSING VALVE RELAY

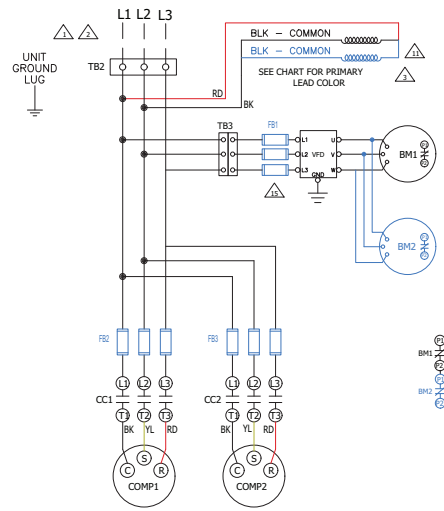

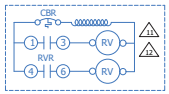

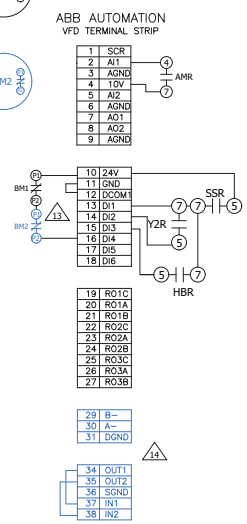

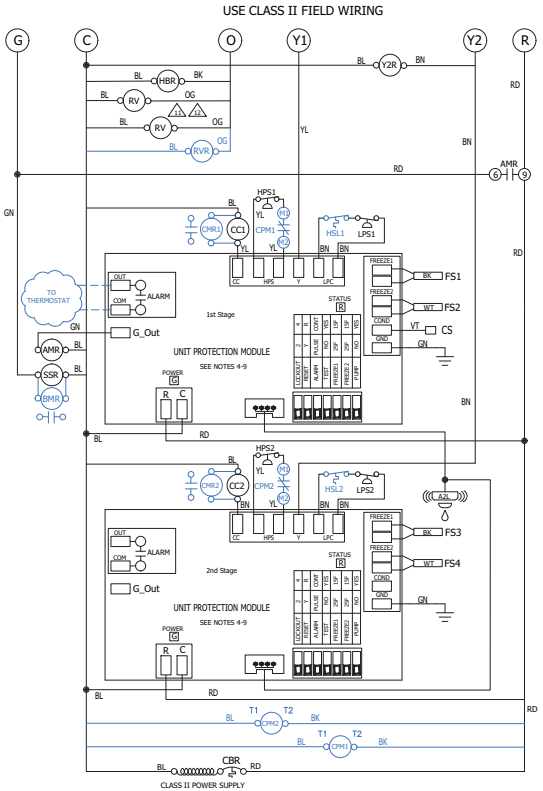

NOTES :

1. SEE UNIT NAME PLATE FOR ELECTRICAL RATING
2. ALL FIELD WIRING MUST BE IN ACCORDANCE WITH N.E.C.-N.F.P.A. #70, COPPER CONDUCTORS ONLY. CONDUCTEURS EN CUIVRE SEULEMENT.
3. 208/230V UNITS ARE FACTORY WIRED FOR 230V OPERATION. FOR 208V OPERATION, REMOVE 240V LEAD AND CONNECT IT TO 208V. CAP ALL UNUSED LEADS.
4. UPM-I INCLUDES BUILT IN: 270-300 SECOND RANDOM START
   300 SECOND DELAY ON BREAK
   120 SECOND LOW PRESSURE BYPASS
   120 SECOND FREEZE PROTECTION BYPASS
5. "TEST" DIP SWITCH REDUCES DELAYS TO 10 SEC WHEN SET TO YES. MUST BE SET TO "NO" FOR NORMAL OPERATION.
6. "FREEZE SENSOR" ON CONDENSER WILL BE SET TO 25°F BY DEFAULT. IF 15°F OPERATION IS REQUIRED, MOVE DIP SWITCH SLIDER TO THE 15°F POSITION.
7. "ALARM OUTPUT" DIP SWITCH MUST BE SET TO "PULSE" IF BLINKING T-STAT SERVICE LIGHT IS DESIRED.
8. DEFAULT SETTINGS FOR UPM BOARD FROM FACTORY SHOWN. ALSO SEE INSTALLATION MANUAL.
9. ALARM OUTPUT IS NORMALLY OPEN (NO) DRY CONTACT. IF 24 VAC IS NEEDED, CONNECT R FROM THERMOSTAT TERMINAL BLOCK TO ALR-COM TERMINAL, 24VAC WILL BE SENSED ON THE ALR-OUT WHEN THE UNIT IS IN ALARM CONDITION. OUTPUT WILL BE PULSED IF PULSE IS SELECTED.
10. CHECK FOR PROPER PHASE ROTATION ON UNITS WITH SCROLL COMPRESSORS. REVERSE ROTATION WILL DAMAGE THE COMPRESSOR AND VOID UNIT WARRANTY.
11. REVERSING VALVES ARE WIRED TO A SEPARATE TRANSFORMER ON 30 TON UNITS.
12. REVERSING VALVES AND/OR RELAYS ARE NOT PRESENT IN STRAIGHT COOL UNITS. HBR IS CONNECTED TO Y1.
13. P1 & P2 INTERLOCKS OF THE BLOWER MOTOR(S) MUST BE CONNECTED IN SERIES WITH TERMINALS 10 & 16 OF THE VFD TO ENABLE THE SAFETY INTERLOCK OF THE VFD AND TO PROTECT THE MOTOR(S) FROM THERMAL DAMAGE. TERMINALS 11 & 12 MUST ALSO BE CONNECTED TOGETHER.
14. X5 AND X4 TERMINALS ARE FOUND ON ABB ACH580 VFD'S ONLY.
15. FUSE PROTECTION IS REQUIRED ON ABB ACH580 MODELS PER UL-61800-5-1.

8733838199

Fig. 40 — Wiring Diagram — 50VQP 6-30 Ton Capacity, Three Phase, Staged Air Volume

STATUS LED/ALARM BLINK CODES	
1	HIGH PRESSURE FAULT – CKT 1
2	LOW PRESSURE FAULT – CKT 1
3	HIGH PRESSURE FAULT – CKT 2
4	LOW PRESSURE FAULT – CKT 2
5	FREEZE SENSOR 1 FAULT
6	CONDENSATE FAULT
7	BROWN OUT FAULT
8	FREEZE SENSOR 2 FAULT
9	FREEZE SENSOR 3 FAULT
10	FREEZE SENSOR 4 FAULT
11	REFRIGERANT LEAK FAULT
12	2ND STAGE COMMUNICATION FAULT

COLOR CHART LEGEND	
ABBREVIATION	COLOR
BK	BLACK
BL	BLUE
BN	BROWN
GY	GRAY
GN	GREEN
OG	ORANGE
RD	RED
VT	VIOLET
WT	WHITE
YL	YELLOW

FACTORY WIRE ————

FIELD WIRE — — —

STANDARD COMPONENTS LEGEND:

#1 - FIRST STAGE
#2 - SECOND STAGE
A2L - AIR TO LIQUID REFRIGERANT LEAK SENSOR
AMR - A2L MITIGATION RELAY
BM1 - BLOWER MOTOR (1 OR 2 PER UNIT)
CBR - 24VAC CIRCUIT BREAKER
CC - COMPRESSOR CONTACTOR
CS - CONDENSATE SENSOR (1 PER DRAIN PAN)
FS - FREEZE SENSOR
HPS - HIGH PRESSURE SWITCH
LPS - LOW PRESSURE SWITCH
P1,P2 - BLOWER MOTOR PROTECTION (INVERTER BLOWERS ONLY)
RV - REVERSING VALVE (HEAT PUMPS ONLY)
SSR - START/STOP RELAY
TB2 - TERMINAL BLOCK (HIGH VOLTAGE)
TB3, TB4 - VFD TERMINAL BLOCK(S) (HIGH VOLTAGE)
TB5, TB6 - VFD TERMINAL BLOCK(S) (LOW VOLTAGE)
VFD - VARIABLE FREQUENCY DRIVE

OPTIONAL COMPONENTS LEGEND:

[ ] BM2 - BLOWER MOTOR
[ ] BMR - BLOWER MONITOR RELAY
[ ] CMR - COMPRESSOR MONITOR RELAY
[ ] CPM - COMPRESSOR PROTECTION MODULE (15 TON AND LARGER COMPRESSORS)
[ ] EMS - ENERGY MGMT SYSTEM RELAY
[ ] FB1 - VFD FUSE BLOCK (WITH ACH580 MODEL ONLY)
[ ] FB2, FB3 - FUSE BLOCK (15 TON AND LARGER COMPRESSORS)
[ ] HSL - HIGH TEMPERATURE SUCTION LIMIT (WITH HGBP ONLY)
[ ] RVR - REVERSING VALVE RELAY

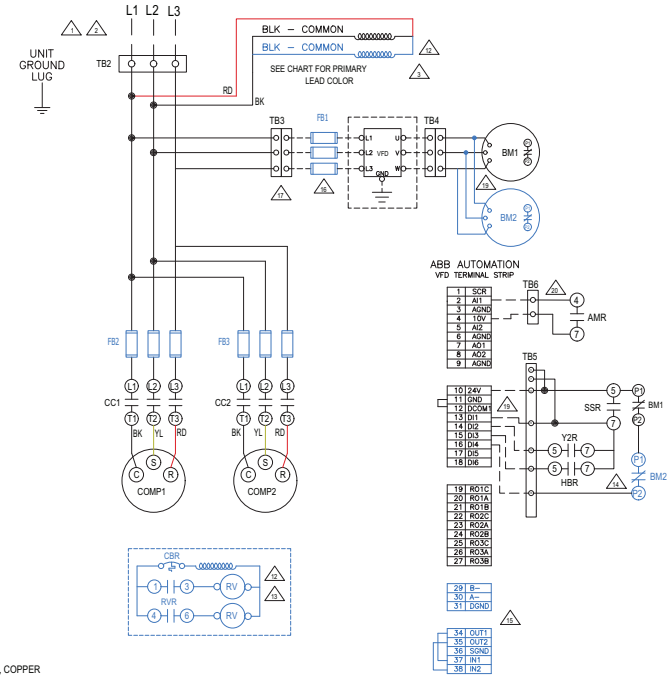

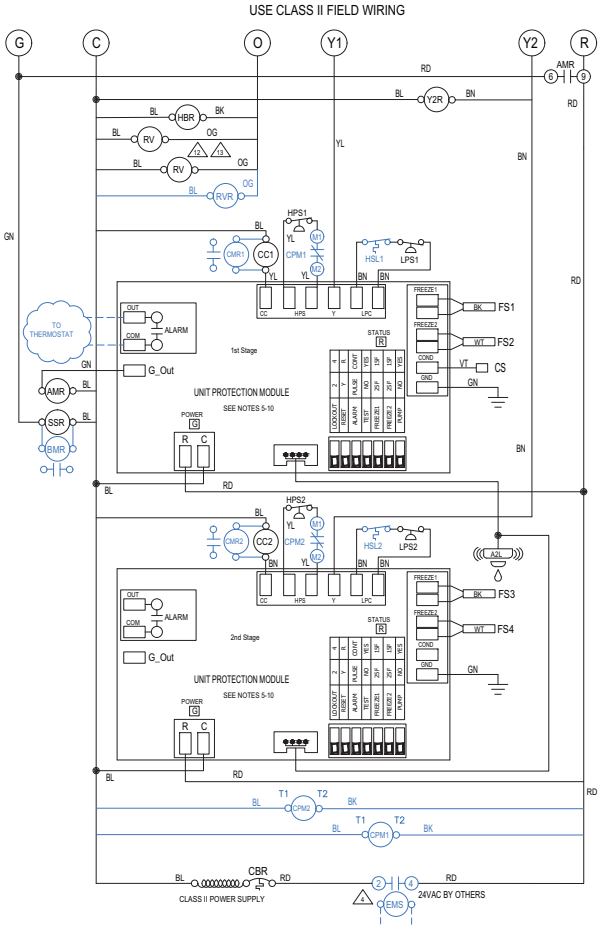

NOTES:

1. SEE UNIT NAME PLATE FOR ELECTRICAL RATING
2. ALL FIELD WIRING MUST BE IN ACCORDANCE WITH N.E.C.-N.F.P.A. #70, COPPER CONDUCTORS ONLY. CONDUCTEURS EN CUIVRE SEULEMENT.
3. 208/230V UNITS ARE FACTORY WIRED FOR 230V OPERATION. FOR 208V OPERATION, REMOVE 240V LEAD AND CONNECT IT TO 208V. CAP ALL UNUSED LEADS.
4. FOR ALTERNATE EMS COIL VOLTAGES CONSULT FACTORY.
5. UPM-I INCLUDES BUILT IN: 270-300 SECOND RANDOM START
   300 SECOND DELAY ON BREAK
   120 SECOND LOW PRESSURE BYPASS
   120 SECOND FREEZE PROTECTION BYPASS
6. "TEST" DIP SWITCH REDUCES DELAYS TO 10 SEC WHEN SET TO YES. MUST BE SET TO "NO" FOR NORMAL OPERATION.
7. "FREEZE SENSOR" ON CONDENSER WILL BE SET TO 25°F BY DEFAULT. IF 15°F OPERATION IS REQUIRED, MOVE DIP SWITCH SLIDER TO THE 15°F POSITION.
8. "ALARM OUTPUT" DIP SWITCH MUST BE SET TO "PULSE" IF BLINKING T-STAT SERVICE LIGHT IS DESIRED.
9. DEFAULT SETTINGS FOR UPM BOARD FROM FACTORY SHOWN. ALSO SEE INSTALLATION MANUAL.
10. ALARM OUTPUT IS NORMALLY OPEN (NO) DRY CONTACT. IF 24 VAC IS NEEDED, CONNECT R FROM THERMOSTAT TERMINAL BLOCK TO ALR-COM TERMINAL, 24VAC WILL BE SENSED ON THE ALR-OUT WHEN THE UNIT IS IN ALARM CONDITION.
11. CHECK FOR PROPER PHASE ROTATION ON UNITS WITH SCROLL COMPRESSORS. REVERSE ROTATION WILL DAMAGE THE COMPRESSOR AND VOID UNIT WARRANTY.
12. REVERSING VALVES ARE WIRED TO A SEPARATE TRANSFORMER ON 30 TON UNITS.
13. REVERSING VALVES AND/OR RELAYS ARE NOT PRESENT IN STRAIGHT COOL UNITS. HBR IS CONNECTED TO Y1.
14. P1 & P2 INTERLOCKS OF THE BLOWER MOTOR(S) MUST BE CONNECTED IN SERIES WITH TERMINALS 10 & 16 OF THE VFD TO ENABLE THE SAFETY INTERLOCK OF THE VFD AND TO PROTECT THE MOTOR(S) FROM THERMAL DAMAGE. TERMINALS 11 & 12 MUST ALSO BE CONNECTED TOGETHER.
15. X5 AND X4 TERMINALS ARE FOUND ON ABB ACH580 VFD'S ONLY.
16. FUSE PROTECTION IS REQUIRED ON ABB ACH580 MODELS PER UL-61800-5-1.
17. SUPPLY AND LOAD WIRING WILL BE COMPLETED FROM FACTORY TO TB3 AND TB4. SEE HIGH VOLTAGE WIRING INSTRUCTIONS PROVIDED IN ABB INSTALLATION, OPERATION AND MAINTENANCE MANUAL PROVIDED WITH VFD.
18. BLOWER CONSTANT SPEED & START/STOP SIGNALS WILL BE TERMINATED TO 7-PIN TERMINAL BLOCK (TB5), READY FOR FIELD WIRING TO BE CONNECTED FROM THE CONTROL SIGNAL WIRING THAT IS PROVIDED FROM THE FACTORY.
19. UNIT IS FACTORY PROGRAMMED USING THE "HVAC DEFAULT" MACRO TO OPERATE BLOWER MOTOR(S) AT NAMEPLATE RATED RPM SPEED. SEE INFORMATION REGARDING OPERATION AND START-UP DATA PROVIDED IN ABB INSTALLATION, OPERATION AND MAINTENANCE MANUAL PROVIDED WITH VFD.
20. BLOWER FULL SPEED SIGNAL WILL BE TERMINATED TO 2-PIN TERMINAL BLOCK (TB6), READY FOR FIELD WIRING TO BE CONNECTED FROM THE CONTROL SIGNAL WIRING THAT IS PROVIDED FROM THE FACTORY.

8733838202

Fig. 41 — Wiring Diagram — 50HQP 6-30 Ton Capacity (Field-Installed VFD), Three Phase, Staged Air Volume

STATUS LED/ALARM BLINK CODES	
1	HIGH PRESSURE FAULT – CKT 1
2	LOW PRESSURE FAULT – CKT 1
3	HIGH PRESSURE FAULT – CKT 2
4	LOW PRESSURE FAULT – CKT 2
5	FREEZE SENSOR 1 FAULT
6	CONDENSATE FAULT
7	BROWN OUT FAULT
8	FREEZE SENSOR 2 FAULT
9	FREEZE SENSOR 3 FAULT
10	FREEZE SENSOR 4 FAULT
11	REFRIGERANT LEAK FAULT
12	2ND STAGE COMMUNICATION FAULT

COLOR CHART LEGEND	
ABBREVIATION	COLOR
BK	BLACK
BL	BLUE
BN	BROWN
GY	GRAY
GN	GREEN
OG	ORANGE
RD	RED
VT	VIOLET
WT	WHITE
YL	YELLOW

FACTORY WIRE ————

FIELD WIRE — — —

STANDARD COMPONENTS LEGEND:

#1 - FIRST STAGE
#2 - SECOND STAGE
A2L - AIR TO LIQUID REFRIGERANT LEAK SENSOR
AMR - A2L MITIGATION RELAY
BM1 - BLOWER MOTOR (1 OR 2 PER UNIT)
BMR - BLOWER MONITOR RELAY
CBR - 24VAC CIRCUIT BREAKER
CC - COMPRESSOR CONTACTOR
CMR - COMPRESSOR MONITOR RELAY
CS - CONDENSATE SENSOR (1 PER DRAIN PAN)
FS - FREEZE SENSOR
HBR - HEATING BLOWER RELAY
HPS - HIGH PRESSURE SWITCH
LPS - LOW PRESSURE SWITCH
P1,P2 - BLOWER MOTOR PROTECTION (INVERTER BLOWERS ONLY)
RV - REVERSING VALVE (HEAT PUMPS ONLY)
SSR - START/STOP RELAY
TB2 - MAIN TERMINAL BLOCK (HIGH VOLTAGE)
TB3 - VFD TERMINAL BLOCK
VFD - VARIABLE FREQUENCY DRIVE
Y2R - 2ND STAGE RELAY

OPTIONAL COMPONENTS LEGEND:

[ ] AQS - AQUASTAT (ECONOMIZER)
[ ] BCA - BOILERLESS CONTROL ACQUASTAT
[ ] BCR - BOILERLESS CONTROL RELAY
[ ] BM2 - BLOWER MOTOR
[ ] BMR - BLOWER MONITOR RELAY
[ ] CMR - COMPRESSOR MONITOR RELAY
[ ] CPM - COMPRESSOR PROTECTION MODULE (15 TON AND LARGER COMPRESSORS)
[ ] CR - COOLING/HEATING RELAY
[ ] EMS - ENERGY MGMT SYSTEM RELAY
[ ] ER - ECONOMIZER RELAY
[ ] FB1 - VFD FUSE BLOCK (WITH ACH580 MODEL ONLY)
[ ] FB2, FB3 - FUSE BLOCK (15 TON AND LARGER COMPRESSORS)
[ ] HGV - HOT GAS SOLENOID VALVE(S)
[ ] HR - HEATING/COOLING RELAY
[ ] HSL - HIGH TEMPERATURE SUCTION LIMIT (WITH HGBP ONLY)
[ ] MBV - MOTORIZED BALL VALVE (ECONOMIZER)
[ ] MVR - MOTORIZED BALL VALVE RELAY (ECONOMIZER)
[ ] RH1 - REHEAT RELAY 1
[ ] RH2 - REHEAT RELAY 2
[ ] RVR - REVERSING VALVE RELAY

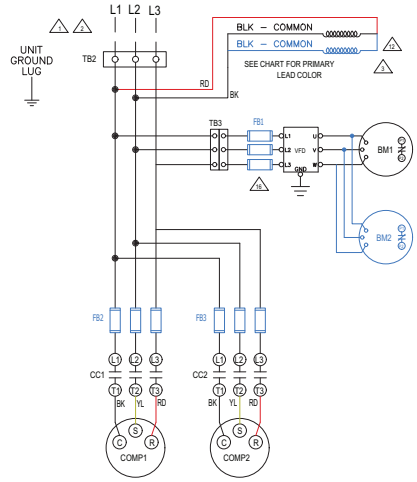

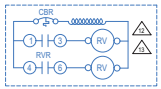

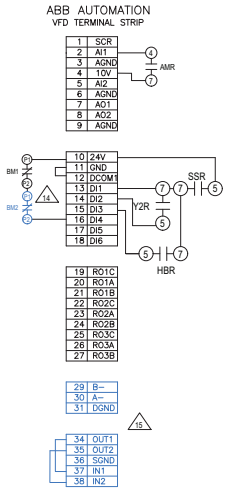

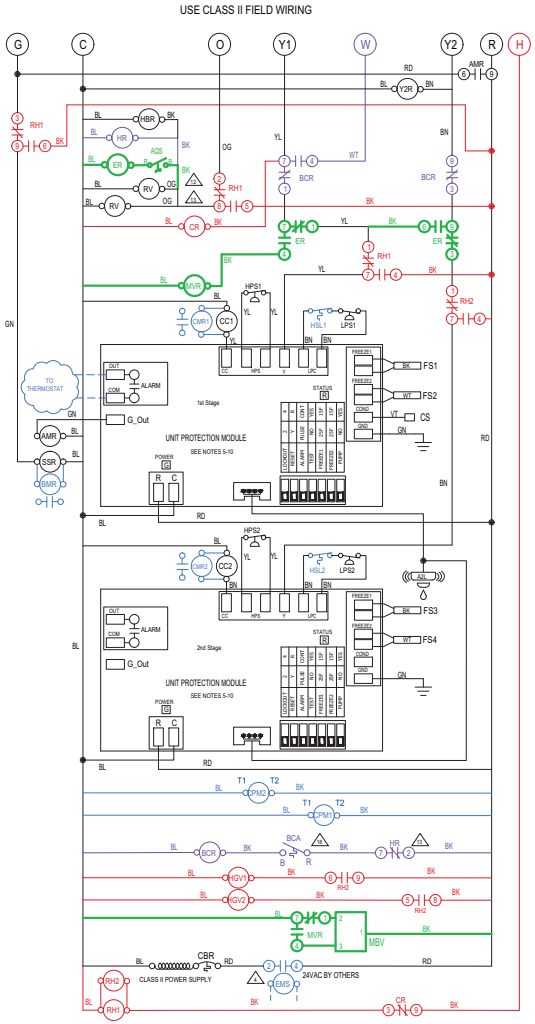

NOTES:

1. SEE UNIT NAME PLATE FOR ELECTRICAL RATING
2. ALL FIELD WIRING MUST BE IN ACCORDANCE WITH N.E.C.-N.F.P.A. #70, COPPER CONDUCTORS ONLY. CONDUCTEURS EN CUIVRE SEULEMENT.
3. 208/230V UNITS ARE FACTORY WIRED FOR 230V OPERATION. FOR 208V OPERATION, REMOVE 240V LEAD AND CONNECT IT TO 208V. CAP ALL UNUSED LEADS.
4. FOR ALTERNATE EMS COIL VOLTAGES CONSULT FACTORY.
5. UPM-I INCLUDES BUILT IN: 270-300 SECOND RANDOM START
   300 SECOND DELAY ON BREAK
   120 SECOND LOW PRESSURE BYPASS
   120 SECOND FREEZE PROTECTION BYPASS
6. "TEST" DIP SWITCH REDUCES DELAYS TO 10 SEC WHEN SET TO YES. MUST BE SET TO "NO" FOR NORMAL OPERATION.
7. "FREEZE SENSOR" ON CONDENSER WILL BE SET TO 25°F BY DEFAULT. IF 15°F OPERATION IS REQUIRED, MOVE DIP SWITCH SLIDER TO THE 15°F POSITION.
8. "ALARM OUTPUT" DIP SWITCH MUST BE SET TO "PULSE" IF BLINKING T-STAT SERVICE LIGHT IS DESIRED.
9. DEFAULT SETTINGS FOR UPM BOARD FROM FACTORY SHOWN. ALSO SEE INSTALLATION MANUAL.
10. ALARM OUTPUT IS NORMALLY OPEN (NO) DRY CONTACT. IF 24 VAC IS NEEDED, CONNECT R FROM THERMOSTAT TERMINAL BLOCK TO ALR-COM TERMINAL, 24VAC WILL BE SENSED ON THE ALR-OUT WHEN THE UNIT IS IN ALARM CONDITION. OUTPUT WILL BE PULSED IF PULSE IS SELECTED.
11. CHECK FOR PROPER PHASE ROTATION ON UNITS WITH SCROLL COMPRESSORS. REVERSE ROTATION WILL DAMAGE THE COMPRESSOR AND VOID UNIT WARRANTY.
12. REVERSING VALVES ARE WIRED TO A SEPARATE TRANSFORMER ON 30 TON UNITS.
13. REVERSING VALVES AND/OR RELAYS ARE NOT PRESENT IN STRAIGHT COOL UNITS. HR WILL NOT BE PRESENT. AQS, HBR, AND/OR CR ARE CONNECTED TO Y1.
14. P1 & P2 INTERLOCKS OF THE BLOWER MOTOR(S) MUST BE CONNECTED IN SERIES WITH TERMINALS 10 & 16 OF THE VFD TO ENABLE THE SAFETY INTERLOCK OF THE VFD AND TO PROTECT THE MOTOR(S) FROM THERMAL DAMAGE. TERMINALS 11 & 12 MUST ALSO BE CONNECTED TOGETHER.
15. X5 AND X4 TERMINALS ARE FOUND ON ABB ACH580 VFD'S ONLY.
16. FUSE PROTECTION IS REQUIRED ON ABB ACH580 MODELS PER UL-61800-5-1.
17. AQS CONTACTS R-B CLOSE WHEN ENTERING WATER TEMPERATURE IS BELOW SETPOINT OF AQS.
18. BCA CONTACTS R-Y OPEN ON DROP IN WATER TEMPERATURE AND R-B CLOSE.

8733838200

Fig. 42 — Wiring Diagram — 50VQP 6-30 Ton Capacity, Three Phase, Staged Air Volume, Options (WSE, HGRH, HGBP, BE, SR, EMS)

STATUS	LED/ALARM BLINK CODES
1	HIGH PRESSURE FAULT – CKT 1
2	LOW PRESSURE FAULT – CKT 1
3	HIGH PRESSURE FAULT – CKT 2
4	LOW PRESSURE FAULT – CKT 2
5	FREEZE SENSOR 1 FAULT
6	CONDENSATE FAULT
7	BROWN OUT FAULT
8	FREEZE SENSOR 2 FAULT
9	FREEZE SENSOR 3 FAULT
10	FREEZE SENSOR 4 FAULT
11	REFRIGERANT LEAK FAULT
12	2ND STAGE COMMUNICATION FAULT

COLOR CHART LEGEND	
ABBREVIATION	COLOR
BK	BLACK
BL	BLUE
BN	BROWN
GY	GRAY
GN	GREEN
OG	ORANGE
RD	RED
VT	VIOLET
WT	WHITE
YL	YELLOW

FACTORY WIRE ————
FIELD WIRE — — —

STANDARD COMPONENTS LEGEND:

#1 - FIRST STAGE
#2 - SECOND STAGE
A2L - AIR TO LIQUID REFRIGERANT LEAK SENSOR
AMR - A2L MITIGATION RELAY
BM1 - BLOWER MOTOR (1 OR 2 PER UNIT)
CBR - 24VAC CIRCUIT BREAKER
CC - COMPRESSOR CONTACTOR
CS - CONDENSATE SENSOR (1 PER DRAIN PAN)
FS - FREEZE SENSOR
HBR - HEATING BLOWER RELAY
HPS - HIGH PRESSURE SWITCH
LPS - LOW PRESSURE SWITCH
P1,P2 - BLOWER MOTOR PROTECTION (INVERTER BLOWERS ONLY)
RV - REVERSING VALVE (HEAT PUMPS ONLY)
SSR - START/STOP RELAY
TB2 - MAIN TERMINAL BLOCK (HIGH VOLTAGE)
TB3, TB4 - VFD TERMINAL BLOCK (HIGH VOLTAGE)
TB5, TB6 - VFD TERMINAL BLOCK (LOW VOLTAGE)
VFD - VARIABLE FREQUENCY DRIVE
Y2R - 2ND STAGE RELAY

OPTIONAL COMPONENTS LEGEND:

[ ] AQS - AQUASTAT (ECONOMIZER)
[ ] BCA - BOILERLESS CONTROL ACQUASTAT
[ ] BCR - BOILERLESS CONTROL RELAY
[ ] BM2 - BLOWER MOTOR
[ ] BMR - BLOWER MONITOR RELAY
[ ] CMR - COMPRESSOR MONITOR RELAY
[ ] CPM - COMPRESSOR PROTECTION MODULE (15 TON AND LARGER COMPRESSORS)
[ ] CR - COOLING/HEATING RELAY
[ ] ER - ECONOMIZER RELAY
[ ] EMS - ENERGY MGMT SYSTEM RELAY
[ ] FB1 - VFD FUSE BLOCK (WITH ACH580 MODEL ONLY)
[ ] FB2, FB3 - FUSE BLOCK (15 TON AND LARGER COMPRESSORS)
[ ] HGV - HOT GAS SOLENOID VALVE(S)
[ ] HR - HEATING/COOLING RELAY
[ ] HSL - HIGH TEMPERATURE SUCTION LIMIT (WITH HGBP ONLY)
[ ] MBV - MOTORIZED BALL VALVE
[ ] MVR - MOTORIZED BALL VALVE RELAY
[ ] RH1 - REHEAT RELAY 1
[ ] RH2 - REHEAT RELAY 2
[ ] RVR - REVERSING VALVE RELAY

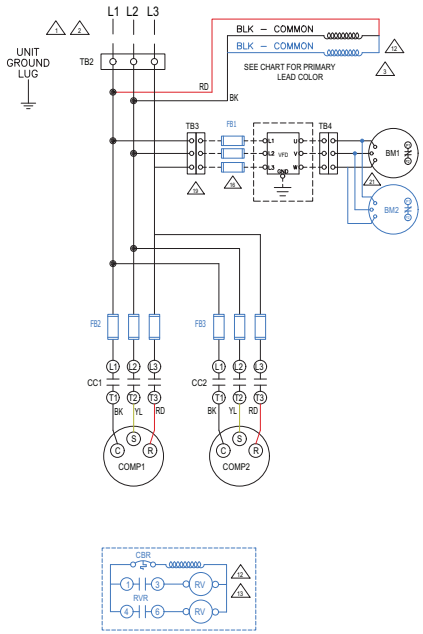

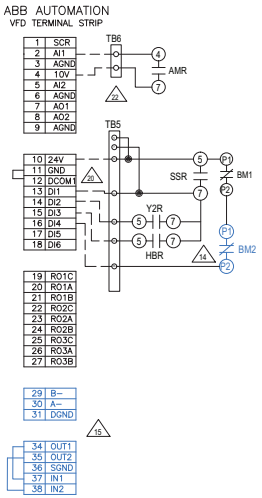

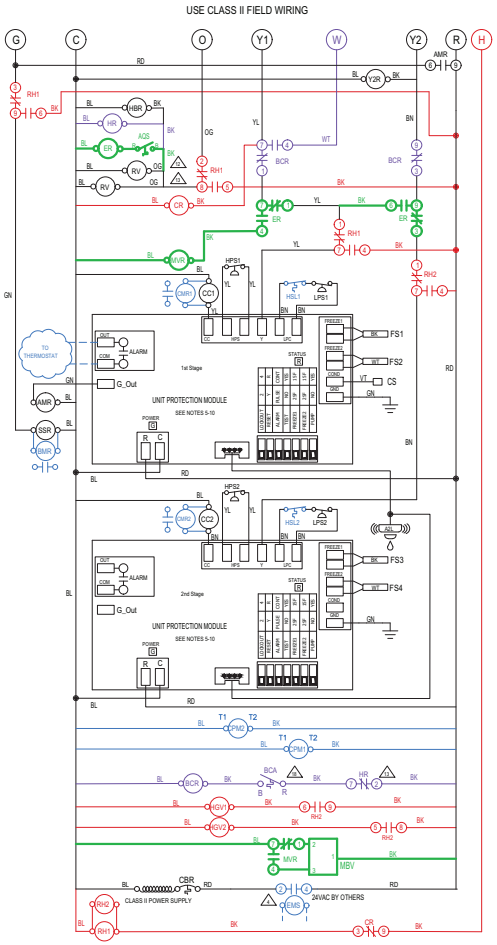

NOTES:

1. SEE UNIT NAME PLATE FOR ELECTRICAL RATING
2. ALL FIELD WIRING MUST BE IN ACCORDANCE WITH N.E.C.-N.F.P.A. #70, COPPER CONDUCTORS ONLY. CONDUCTEURS EN CUIVRE SEULEMENT.
3. 208/230V UNITS ARE FACTORY WIRED FOR 230V OPERATION. FOR 208V OPERATION, REMOVE 240V LEAD AND CONNECT IT TO 208V. CAP ALL UNUSED LEADS.
4. FOR ALTERNATE EMS COIL VOLTAGES CONSULT FACTORY.
5. UPM-I INCLUDES BUILT IN: 270-300 SECOND RANDOM START
   300 SECOND DELAY ON BREAK
   120 SECOND LOW PRESSURE BYPASS
   120 SECOND FREEZE PROTECTION BYPASS
6. "TEST" DIP SWITCH REDUCES DELAYS TO 10 SEC WHEN SET TO YES. MUST BE SET TO "NO" FOR NORMAL OPERATION.
7. FREEZE SENSOR" ON CONDENSER WILL BE SET TO 25°F BY DEFAULT. IF 15°F OPERATION IS REQUIRED, MOVE DIP SWITCH SLIDER TO THE 15°F POSITION.
8. "ALARM OUTPUT" DIP SWITCH MUST BE SET TO "PULSE" IF BLINKING T-STAT SERVICE LIGHT IS DESIRED.
9. DEFAULT SETTINGS FOR UPM BOARD FROM FACTORY SHOWN. ALSO SEE INSTALLATION MANUAL.
10. ALARM OUTPUT IS NORMALLY OPEN (NO) DRY CONTACT. IF 24 VAC IS NEEDED, CONNECT R FROM THERMOSTAT TERMINAL BLOCK TO ALR-COM TERMINAL, 24VAC WILL BE SENSED ON THE ALR-OUT WHEN THE UNIT IS IN ALARM CONDITION. OUTPUT WILL BE PULSED IF PULSE IS SELECTED.
11. CHECK FOR PROPER PHASE ROTATION ON UNITS WITH SCROLL COMPRESSORS. REVERSE ROTATION WILL DAMAGE THE COMPRESSOR AND VOID UNIT WARRANTY.
12. REVERSING VALVES ARE WIRED TO A SEPARATE TRANSFORMER ON 30 TON UNITS.
13. REVERSING VALVES AND/OR RELAYS ARE NOT PRESENT IN STRAIGHT COOL UNITS. HR WILL NOT BE PRESENT. AQS, HBR, AND/OR CR ARE CONNECTED TO Y1.
14. P1 & P2 INTERLOCKS OF THE BLOWER MOTOR(S) MUST BE CONNECTED IN SERIES WITH TERMINALS 10 & 16 OF THE VFD TO ENABLE THE SAFETY INTERLOCK OF THE VFD AND TO PROTECT THE MOTOR(S) FROM THERMAL DAMAGE. TERMINALS 11 & 12 MUST ALSO BE CONNECTED TOGETHER.
15. X5 AND X4 TERMINALS ARE FOUND ON ABB ACH580 VFD'S ONLY.
16. FUSE PROTECTION IS REQUIRED ON ABB ACH580 MODELS PER UL-61800-5-1.
17. AQS CONTACTS R-B CLOSE WHEN ENTERING WATER TEMPERATURE IS BELOW SETPOINT OF AQS.
18. BCA CONTACTS R-Y OPEN ON DROP IN WATER TEMPERATURE AND R-B CLOSE.
19. SUPPLY AND LOAD WIRING WILL BE COMPLETED FROM FACTORY TO TB3 AND TB4. SEE HIGH VOLTAGE WIRING INSTRUCTIONS PROVIDED IN ABB INSTALLATION, OPERATION AND MAINTENANCE MANUAL PROVIDED WITH VFD.
20. BLOWER CONSTANT SPEED & START/STOP SIGNALS WILL BE TERMINATED TO 7-PIN TERMINAL BLOCK (TB5), READY FOR FIELD WIRING TO BE CONNECTED FROM THE CONTROL SIGNAL WIRING THAT IS PROVIDED FROM THE FACTORY.
21. UNIT IS FACTORY PROGRAMMED USING THE "HVAC DEFAULT" MACRO TO OPERATE BLOWER MOTOR(S) AT NAMEPLATE RATED RPM SPEED. SEE INFORMATION REGARDING OPERATION AND START-UP DATA PROVIDED IN ABB INSTALLATION, OPERATION AND MAINTENANCE MANUAL PROVIDED WITH VFD.
22. BLOWER FULL SPEED SIGNAL WILL BE TERMINATED TO 2-PIN TERMINAL BLOCK (TB6), READY FOR FIELD WIRING TO BE CONNECTED FROM THE CONTROL SIGNAL WIRING THAT IS PROVIDED FROM THE FACTORY.

8733838203

Fig. 43 — Wiring Diagram — 50HQP 6-30 Ton Capacity (Field-Installed), Three Phase, Staged Air Volume, Options (WSE, HGRH, HGBP, BE, SR, EMS)

STATUS	LED/ALARM BLINK CODES
1	HIGH PRESSURE FAULT – CKT 1
2	LOW PRESSURE FAULT – CKT 1
3	HIGH PRESSURE FAULT – CKT 2
4	LOW PRESSURE FAULT – CKT 2
5	FREEZE SENSOR 1 FAULT
6	CONDENSATE FAULT
7	BROWN OUT FAULT
8	FREEZE SENSOR 2 FAULT
9	FREEZE SENSOR 3 FAULT
10	FREEZE SENSOR 4 FAULT
11	REFRIGERANT LEAK FAULT
12	2ND STAGE COMMUNICATION FAULT

COLOR CHART LEGEND	
ABBREVIATION	COLOR
BK	BLACK
BL	BLUE
BN	BROWN
GY	GRAY
GN	GREEN
OG	ORANGE
RD	RED
VT	VIOLET
WT	WHITE
YL	YELLOW

FACTORY WIRE ————

FIELD WIRE — — —

STANDARD COMPONENTS LEGEND:

#1 - FIRST STAGE
#2 - SECOND STAGE
A2L - AIR TO LIQUID REFRIGERANT LEAK SENSOR
AMR - A2L MITIGATION RELAY
BM1 - BLOWER MOTOR (1 OR 2 PER UNIT)
BMR - BLOWER MOTOR RELAY
CBR - 24VAC CIRCUIT BREAKER
CC - COMPRESSOR CONTACTOR
CMR - COMPRESSOR MONITOR RELAY
CS - CONDENSATE SENSOR (1 PER DRAIN PAN)
FS - FREEZE SENSOR
HPS - HIGH PRESSURE SWITCH
LPS - LOW PRESSURE SWITCH
P1,P2 - BLOWER MOTOR PROTECTION (INVERTER BLOWERS ONLY)
RV - REVERSING VALVE (HEAT PUMPS ONLY)
SSR - START/STOP RELAY
TB2 - TERMINAL BLOCK (HIGH VOLTAGE)
TB3 - VFD TERMINAL BLOCK (HIGH VOLTAGE)
VFD - VARIABLE FREQUENCY DRIVE

OPTIONAL COMPONENTS LEGEND:

[ ] BM2 - BLOWER MOTOR
[ ] CPM - COMPRESSOR PROTECTION MODULE (15 TON AND LARGER COMPRESSORS)
[ ] FB1 - VFD FUSE BLOCK (WITH ACH580 MODEL ONLY)
[ ] FB2, FB3 - FUSE BLOCK (15 TON AND LARGER COMPRESSORS)
[ ] HSL - HIGH TEMPERATURE SUCTION LIMIT (WITH HGBP ONLY)
[ ] RVR - REVERSING VALVE RELAY

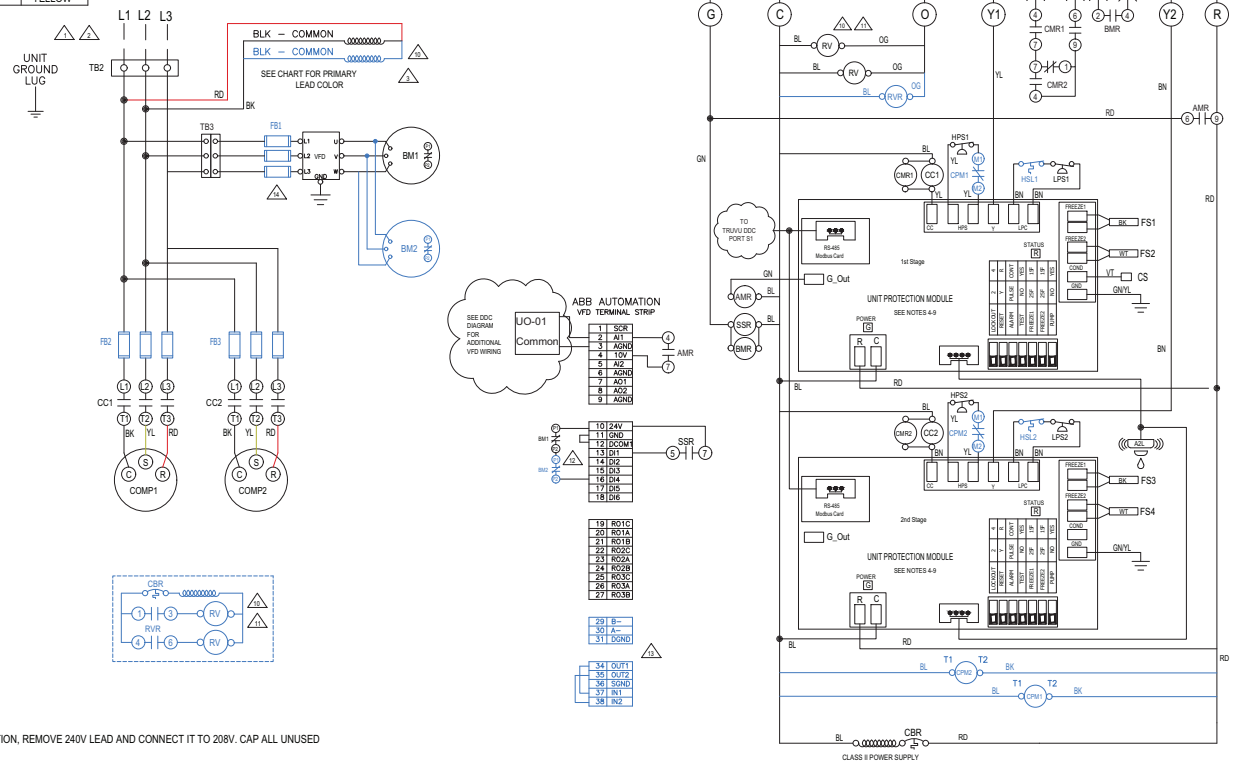

NOTES:

1. SEE UNIT NAME PLATE FOR ELECTRICAL RATING
2. ALL FIELD WIRING MUST BE IN ACCORDANCE WITH N.E.C.-N.F.P.A. #70, COPPER CONDUCTORS ONLY. CONDUCTEURS EN CUIVRE SEULEMENT.
3. 208/230V UNITS ARE FACTORY WIRED FOR 230V OPERATION. FOR 208V OPERATION, REMOVE 240V LEAD AND CONNECT IT TO 208V. CAP ALL UNUSED LEADS.
4. UPM-I INCLUDES BUILT IN: 270-300 SECOND RANDOM START
   300 SECOND DELAY ON BREAK
   120 SECOND LOW PRESSURE BYPASS
   120 SECOND FREEZE PROTECTION BYPASS
5. "TEST" DIP SWITCH REDUCES DELAYS TO 10 SEC WHEN SET TO YES. MUST BE SET TO "NO" FOR NORMAL OPERATION.
6. "FREEZE SENSOR" ON CONDENSER WILL BE SET TO 25°F BY DEFAULT. IF 15°F OPERATION IS REQUIRED, MOVE DIP SWITCH SLIDER TO THE 15°F POSITION.
7. "ALARM OUTPUT" DIP SWITCH MUST BE SET TO "PULSE" IF BLINKING T-STAT SERVICE LIGHT IS DESIRED.
8. DEFAULT SETTINGS FOR UPM BOARD FROM FACTORY SHOWN. ALSO SEE INSTALLATION MANUAL.
9. CHECK FOR PROPER PHASE ROTATION ON UNITS WITH SCROLL COMPRESSORS. REVERSE ROTATION WILL DAMAGE THE COMPRESSOR AND VOID UNIT WARRANTY.
10. REVERSING VALVES ARE WIRED TO A SEPARATE TRANSFORMER ON 30 TON UNITS.
11. REVERSING VALVES AND/OR RELAYS ARE NOT PRESENT IN STRAIGHT COOL UNITS.
12. P1 & P2 INTERLOCKS OF THE BLOWER MOTOR(S) MUST BE CONNECTED IN SERIES WITH TERMINALS 10 & 16 OF THE VFD TO ENABLE THE SAFETY INTERLOCK OF THE VFD AND TO PROTECT THE MOTOR(S) FROM THERMAL DAMAGE. TERMINALS 11 & 12 MUST ALSO BE CONNECTED TOGETHER.
13. X5 AND X4 TERMINALS ARE FOUND ON ABB ACH580 VFD'S ONLY.
14. FUSE PROTECTION IS REQUIRED ON ABB ACH580 MODELS PER UL-61800-5-1.
15. CMR CONNECTOR FROM DDC HARNESS WILL BE CONNECTED ACROSS PINS 4 AND 6 OF CMR1 WITH DDC SIGNAL CMR-4 GOING TO PIN GOING TO PIN 4 AND DDC SIGNAL CMR-2 GOING TO PIN 6.

8733838190

Fig. 44 — Wiring Diagram — 50VQP 6-30 Ton Capacity, Three Phase, Staged Air Volume, TruVu™ DDC

STATUS LED/ALARM BLINK CODES	
1	HIGH PRESSURE FAULT – CKT 1
2	LOW PRESSURE FAULT – CKT 1
3	HIGH PRESSURE FAULT – CKT 2
4	LOW PRESSURE FAULT – CKT 2
5	FREEZE SENSOR 1 FAULT
6	CONDENSATE FAULT
7	BROWN OUT FAULT
8	FREEZE SENSOR 2 FAULT
9	FREEZE SENSOR 3 FAULT
10	FREEZE SENSOR 4 FAULT
11	REFRIGERANT LEAK FAULT
12	2ND STAGE COMMUNICATION FAULT

COLOR CHART LEGEND	
ABBREVIATION	COLOR
BK	BLACK
BL	BLUE
BN	BROWN
GY	GRAY
GN	GREEN
OG	ORANGE
RD	RED
VT	VIOLET
WT	WHITE
YL	YELLOW

FACTORY WIRE ————

FIELD WIRE — — —

STANDARD COMPONENTS LEGEND:

#1 - FIRST STAGE
#2 - SECOND STAGE
A2L - AIR TO LIQUID REFRIGERANT LEAK SENSOR
AMR - A2L MITIGATION RELAY
BM1 - BLOWER MOTOR (1 OR 2 PER UNIT)
BMR - BLOWER MONITOR RELAY
CBR - 24VAC CIRCUIT BREAKER
CC - COMPRESSOR CONTACTOR
CMR - COMPRESSOR MONITOR RELAY
CS - CONDENSATE SENSOR (1 PER DRAIN PAN)
FS - FREEZE SENSOR
HPS - HIGH PRESSURE SWITCH
LPS - LOW PRESSURE SWITCH
P1,P2 - BLOWER MOTOR PROTECTION (INVERTER BLOWERS ONLY)
RV - REVERSING VALVE (HEAT PUMPS ONLY)
SSR - START/STOP RELAY
TB2 - TERMINAL BLOCK (HIGH VOLTAGE)
TB3, TB4 - TO/FROM VFD TERMINAL BOCK
TB5 - START/STOP TERMINAL BLOCK (LOW VOLTAGE)
TB6 - A2L MITIGATION TERMINAL BLOCK (LOW VOLTAGE)
VFD - VARIABLE FREQUENCY DRIVE

OPTIONAL COMPONENTS LEGEND:

[ ] BM2 - BLOWER MOTOR
[ ] CPM - COMPRESSOR PROTECTION MODULE (15 TON AND LARGER COMPRESSORS)
[ ] FB1 - VFD FUSE BLOCK (WITH ACH580 MODEL ONLY)
[ ] FB2, FB3 - FUSE BLOCK (15 TON AND LARGER COMPRESSORS)
[ ] HSL - HIGH TEMPERATURE SUCTION LIMIT (WITH HGBP ONLY)
[ ] RVR - REVERSING VALVE RELAY

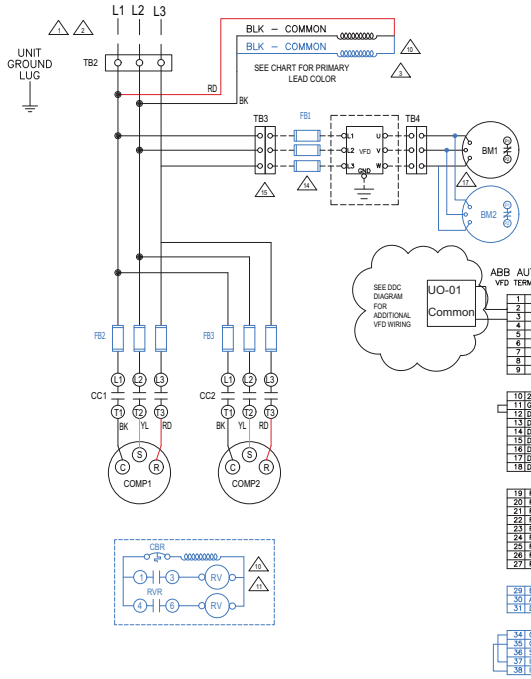

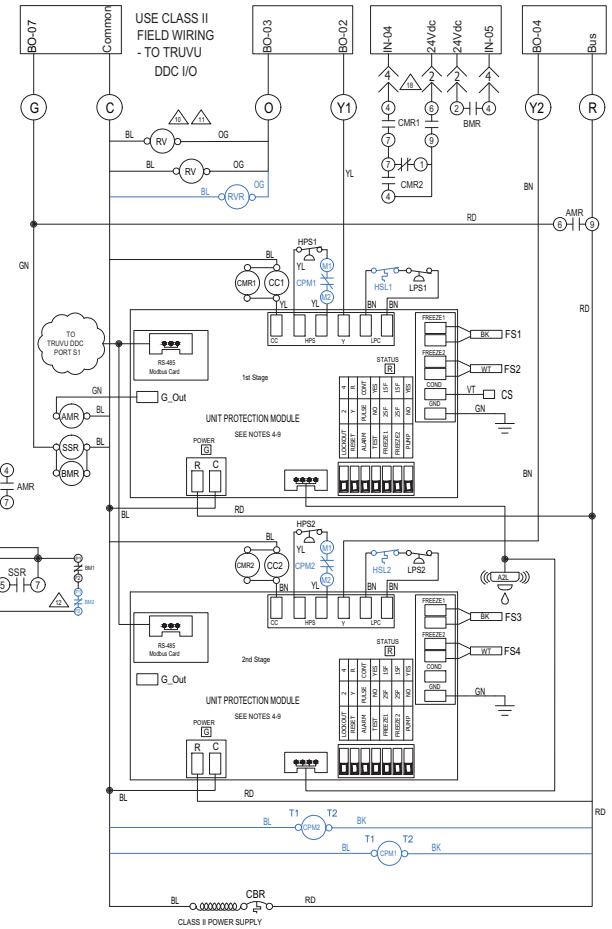

NOTES:

1. SEE UNIT NAME PLATE FOR ELECTRICAL RATING
2. ALL FIELD WIRING MUST BE IN ACCORDANCE WITH N.E.C.-N.F.P.A. #70, COPPER CONDUCTORS ONLY. CONDUCTEURS EN CUIVRE SEULEMENT.
3. 208/230V UNITS ARE FACTORY WIRED FOR 230V OPERATION. FOR 208V OPERATION, REMOVE 240V LEAD AND CONNECT IT TO 208V. CAP ALL UNUSED LEADS.
4. UPM-I INCLUDES BUILT IN: 270-300 SECOND RANDOM START
   300 SECOND DELAY ON BREAK
   120 SECOND LOW PRESSURE BYPASS
   120 SECOND FREEZE PROTECTION BYPASS
5. "TEST" DIP SWITCH REDUCES DELAYS TO 10 SEC WHEN SET TO YES. MUST BE SET TO "NO" FOR NORMAL OPERATION.
6. "FREEZE SENSOR" ON CONDENSER WILL BE SET TO 25°F BY DEFAULT. IF 15°F OPERATION IS REQUIRED, MOVE DIP SWITCH SLIDER TO THE 15°F POSITION.
7. "ALARM OUTPUT" DIP SWITCH MUST BE SET TO "PULSE" IF BLINKING T-STAT SERVICE LIGHT IS DESIRED.
8. DEFAULT SETTINGS FOR UPM BOARD FROM FACTORY SHOWN. ALSO SEE INSTALLATION MANUAL.
9. CHECK FOR PROPER PHASE ROTATION ON UNITS WITH SCROLL COMPRESSORS. REVERSE ROTATION WILL DAMAGE THE COMPRESSOR AND VOID UNIT WARRANTY.
10. REVERSING VALVES ARE WIRED TO A SEPARATE TRANSFORMER ON 30 TON UNITS.
11. REVERSING VALVES AND/OR RELAYS ARE NOT PRESENT IN STRAIGHT COOL UNITS.
12. P1 & P2 INTERLOCKS OF THE BLOWER MOTOR(S) MUST BE CONNECTED IN SERIES WITH TERMINALS 10 & 16 OF THE VFD TO ENABLE THE SAFETY INTERLOCK OF THE VFD AND TO PROTECT THE MOTOR(S) FROM THERMAL DAMAGE. TERMINALS 11 & 12 MUST ALSO BE CONNECTED TOGETHER.
13. X5 AND X4 TERMINALS ARE FOUND ON ABB ACH580 VFD'S ONLY.
14. FUSE PROTECTION IS REQUIRED ON ABB ACH580 MODELS PER UL-61800-5-1.
15. SUPPLY AND LOAD WIRING WILL BE COMPLETED FROM FACTORY TO TB3 AND TB4. SEE HIGH VOLTAGE WIRING INSTRUCTIONS PROVIDED IN ABB INSTALLATION, OPERATION AND MAINTENANCE MANUAL PROVIDED WITH VFD.
16. BLOWER CONSTANT SPEED 1, P1 & P2 INTERLOCKS, & START/STOP SIGNALS WILL BE TERMINATED TO 7-PIN TERMINAL BLOCK (TB5), READY FOR FIELD WIRING TO BE CONNECTED FROM THE CONTROL SIGNAL WIRING THAT IS PROVIDED FROM THE FACTORY.
17. UNIT IS FACTORY PROGRAMMED USING THE "HVAC DEFAULT" MACRO TO OPERATE BLOWER MOTOR(S) AT NAMEPLATE RATED RPM SPEED. SEE INFORMATION REGARDING OPERATION AND START-UP DATA PROVIDED IN ABB INSTALLATION, OPERATION AND MAINTENANCE MANUAL PROVIDED WITH VFD.
18. CMR CONNECTOR FROM DDC HARNESS WILL BE CONNECTED ACROSS PINS 4 AND 6 OF CMR1 WITH DDC SIGNAL CMR-4 GOING TO PIN GOING TO PIN 4 AND DDC SIGNAL CMR-2 GOING TO PIN 6.
19. BLOWER FULL SPEED SIGNAL WILL BE TERMINATED TO 2-PIN TERMINAL BLOCK (TB6), READY FOR FIELD WIRING TO BE CONNECTED FROM THE CONTROL SIGNAL WIRING THAT IS PROVIDED FROM THE FACTORY.

8733838193

Fig. 45 — Wiring Diagram — 50HQP 6-30 Ton Capacity (Field-Installed VFD), Three phase, Staged Air Volume, TruVu™ DDC

STATUS LED/ALARM BLINK CODES	
1	HIGH PRESSURE FAULT – CKT 1
2	LOW PRESSURE FAULT – CKT 1
3	HIGH PRESSURE FAULT – CKT 2
4	LOW PRESSURE FAULT – CKT 2
5	FREEZE SENSOR 1 FAULT
6	CONDENSATE FAULT
7	BROWN OUT FAULT
8	FREEZE SENSOR 2 FAULT
9	FREEZE SENSOR 3 FAULT
10	FREEZE SENSOR 4 FAULT
11	REFRIGERANT LEAK FAULT
12	2ND STAGE COMMUNICATION FAULT

COLOR CHART LEGEND	
ABBREVIATION	COLOR
BK	BLACK
BL	BLUE
BN	BROWN
GY	GRAY
GN	GREEN
OG	ORANGE
RD	RED
VT	VIOLET
WT	WHITE
YL	YELLOW

FACTORY WIRE ————

FIELD WIRE — — —

STANDARD COMPONENTS LEGEND:

#1 - FIRST STAGE
#2 - SECOND STAGE
A2L - AIR TO LIQUID REFRIGERANT LEAK SENSOR
AMR - A2L MITIGATION RELAY
BM1 - BLOWER MOTOR (1 OR 2 PER UNIT)
BMR - BLOWER MONITOR RELAY
CBR - 24VAC CIRCUIT BREAKER
CC - COMPRESSOR CONTACTOR
CMR - COMPRESSOR MONITOR RELAY
CS - CONDENSATE SENSOR (1 PER DRAIN PAN)
FS - FREEZE SENSOR
HPS - HIGH PRESSURE SWITCH
LPS - LOW PRESSURE SWITCH
P1,P2 - BLOWER MOTOR PROTECTION (INVERTER BLOWERS ONLY)
RV - REVERSING VALVE (HEAT PUMPS ONLY)
SSR - START/STOP RELAY
TB2 - TERMINAL BLOCK (HIGH VOLTAGE)
TB3 - VFD TERMINAL BLOCK (HIGH VOLTAGE)
VFD - VARIABLE FREQUENCY DRIVE

OPTIONAL COMPONENTS LEGEND:

[ ] BM2 - BLOWER MOTOR
[ ] CPM - COMPRESSOR PROTECTION MODULE (15 TON AND LARGER COMPRESSORS)
[ ] FB1 - VFD FUSE BLOCK (WITH ACH580 MODEL ONLY)
[ ] FB2, FB3 - FUSE BLOCK (15 TON AND LARGER COMPRESSORS)
[ ] HGV - HOT GAS SOLENOID VALVES
[ ] HSL - HIGH TEMPERATURE SUCTION LIMIT (WITH HGBP ONLY)
[ ] MBV - MOTORIZED BALL VALVE (ECONOMIZER)
[ ] MVR - MOTORIZED BALL VALVE RELAY (ECONOMIZER)
[ ] RVR - REVERSING VALVE RELAY

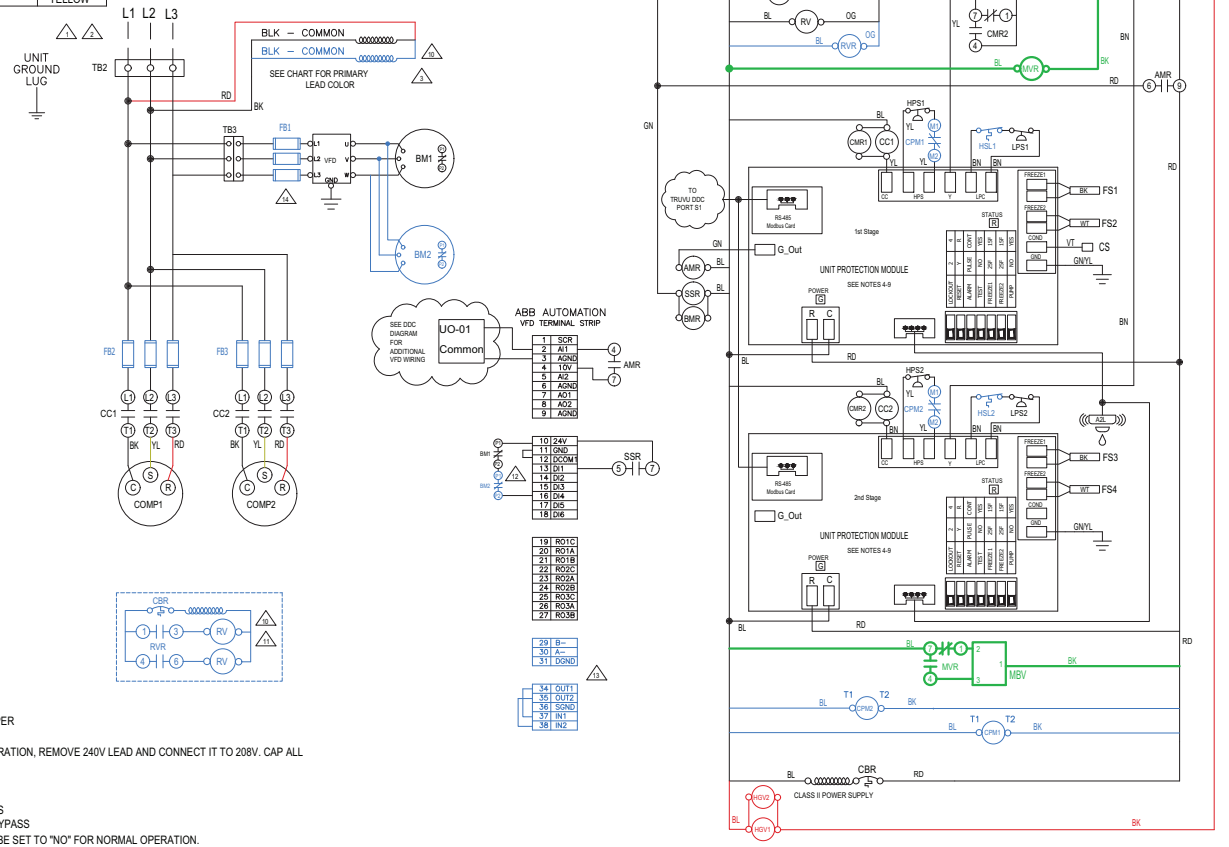

NOTES:

1. SEE UNIT NAME PLATE FOR ELECTRICAL RATING
2. ALL FIELD WIRING MUST BE IN ACCORDANCE WITH N.E.C.-N.F.P.A. #70, COPPER CONDUCTORS ONLY. CONDUCTEURS EN CUIVRE SEULEMENT.
3. 208/230V UNITS ARE FACTORY WIRED FOR 230V OPERATION. FOR 208V OPERATION, REMOVE 240V LEAD AND CONNECT IT TO 208V. CAP ALL UNUSED LEADS.
4. UPM-I INCLUDES BUILT IN: 270-300 SECOND RANDOM START
   300 SECOND DELAY ON BREAK
   120 SECOND LOW PRESSURE BYPASS
   120 SECOND FREEZE PROTECTION BYPASS
5. "TEST" DIP SWITCH REDUCES DELAYS TO 10 SEC WHEN SET TO YES. MUST BE SET TO "NO" FOR NORMAL OPERATION.
6. "FREEZE SENSOR" ON CONDENSER WILL BE SET TO 25°F BY DEFAULT. IF 15°F OPERATION IS REQUIRED, MOVE DIP SWITCH SLIDER TO THE 15°F POSITION.
7. "ALARM OUTPUT" DIP SWITCH MUST BE SET TO "PULSE" IF BLINKING T-STAT SERVICE LIGHT IS DESIRED.
8. DEFAULT SETTINGS FOR UPM BOARD FROM FACTORY SHOWN. ALSO SEE INSTALLATION MANUAL.
9. CHECK FOR PROPER PHASE ROTATION ON UNITS WITH SCROLL COMPRESSORS. REVERSE ROTATION WILL DAMAGE THE COMPRESSOR AND VOID UNIT WARRANTY.
10. REVERSING VALVES ARE WIRED TO A SEPARATE TRANSFORMER ON 30 TON UNITS.
11. REVERSING VALVES AND/OR RELAYS ARE NOT PRESENT IN STRAIGHT COOL UNITS.
12. P1 & P2 INTERLOCKS OF THE BLOWER MOTOR(S) MUST BE CONNECTED IN SERIES WITH TERMINALS 10 & 16 OF THE VFD TO ENABLE THE SAFETY INTERLOCK OF THE VFD AND TO PROTECT THE MOTOR(S) FROM THERMAL DAMAGE. TERMINALS 11 & 12 MUST ALSO BE CONNECTED TOGETHER.
13. X5 AND X4 TERMINALS ARE FOUND ON ABB ACH580 VFD'S ONLY.
14. FUSE PROTECTION IS REQUIRED ON ABB ACH580 MODELS PER UL-61800-5-1.
15. CMR CONNECTOR FROM DDC HARNESS WILL BE CONNECTED ACROSS PINS 4 AND 6 OF CMR1 WITH DDC SIGNAL CMR-4 GOING TO PIN GOING TO PIN 4 AND DDC SIGNAL CMR-2 GOING TO PIN 6.

8733838192

Fig. 46 — Wiring Diagram — 50VQP 6-30 Ton Capacity, Three Phase, Staged Air Volume, TruVu™ DDC, Options (WSE, HGRH, HGBP)

STATUS	LED/ALARM BLINK CODES
1	HIGH PRESSURE FAULT – CKT 1
2	LOW PRESSURE FAULT – CKT 1
3	HIGH PRESSURE FAULT – CKT 2
4	LOW PRESSURE FAULT – CKT 2
5	FREEZE SENSOR 1 FAULT
6	CONDENSATE FAULT
7	BROWN OUT FAULT
8	FREEZE SENSOR 2 FAULT
9	FREEZE SENSOR 3 FAULT
10	FREEZE SENSOR 4 FAULT
11	REFRIGERANT LEAK FAULT
12	2ND STAGE COMMUNICATION FAULT

COLOR CHART LEGEND	
ABBREVIATION	COLOR
BK	BLACK
BL	BLUE
BN	BROWN
GY	GRAY
GN	GREEN
OG	ORANGE
RD	RED
VT	VIOLET
WT	WHITE
YL	YELLOW

FACTORY WIRE ————

FIELD WIRE — — —

STANDARD COMPONENTS LEGEND:

#1 - FIRST STAGE
#2 - SECOND STAGE
A2L - AIR TO LIQUID REFRIGERANT LEAK SENSOR
AMR - A2L MITIGATION RELAY
BM1 - BLOWER MOTOR (1 OR 2 PER UNIT)
BMR - BLOWER MONITOR RELAY
CBR - 24VAC CIRCUIT BREAKER
CMR - COMPRESSOR MONITOR RELAY
CC - COMPRESSOR CONTACTOR
CS - CONDENSATE SENSOR (1 PER DRAIN PAN)
FS - FREEZE SENSOR
HPS - HIGH PRESSURE SWITCH
LPS - LOW PRESSURE SWITCH
P1,P2 - BLOWER MOTOR PROTECTION (INVERTER BLOWERS ONLY)
RV - REVERSING VALVE (HEAT PUMPS ONLY)
SSR - START/STOP RELAY
TB2 - TERMINAL BLOCK (HIGH VOLTAGE)
TB3, TB4 - TO/FROM VFD TERMINAL BOCK
TB5 - START/STOP TERMINAL BLOCK (LOW VOLTAGE)
TB6 - A2L MITIGATION TERMINAL BLOCK (LOW VOLTAGE)
VFD - VARIABLE FREQUENCY DRIVE

OPTIONAL COMPONENTS LEGEND:

[ ] BM2 - BLOWER MOTOR
[ ] CPM - COMPRESSOR PROTECTION MODULE (15 TON AND LARGER COMPRESSORS)
[ ] FB1 - VFD FUSE BLOCK (WITH ACH580 MODEL ONLY)
[ ] FB2, FB3 - FUSE BLOCK (15 TON AND LARGER COMPRESSORS)
[ ] HGV - HOT GAS SOLENOID VALVES
[ ] HSL - HIGH TEMPERATURE SUCTION LIMIT (WITH HGBP ONLY)
[ ] MBV - MOTORIZED BALL VALVE (ECONOMIZER)
[ ] MVR - MOTORIZED BALL VALVE RELAY (ECONOMIZER)
[ ] RVR - REVERSING VALVE RELAY

NOTES:

1. SEE UNIT NAME PLATE FOR ELECTRICAL RATING
2. ALL FIELD WIRING MUST BE IN ACCORDANCE WITH N.E.C.-N.F.P.A. #70, COPPER CONDUCTORS ONLY. CONDUCTEURS EN CUIVRE SEULEMENT.
3. 208/230V UNITS ARE FACTORY WIRED FOR 230V OPERATION. FOR 208V OPERATION, REMOVE 240V LEAD AND CONNECT IT TO 208V. CAP ALL UNUSED LEADS.
4. UPM-I INCLUDES BUILT IN: 270-300 SECOND RANDOM START
   300 SECOND DELAY ON BREAK
   120 SECOND LOW PRESSURE BYPASS
   120 SECOND FREEZE PROTECTION BYPASS
5. "TEST" DIP SWITCH REDUCES DELAYS TO 10 SEC WHEN SET TO YES. MUST BE SET TO "NO" FOR NORMAL OPERATION.
6. "FREEZE SENSOR" ON CONDENSER WILL BE SET TO 25°F BY DEFAULT. IF 15°F OPERATION IS REQUIRED, MOVE DIP SWITCH SLIDER TO THE 15°F POSITION.
7. "ALARM OUTPUT" DIP SWITCH MUST BE SET TO "PULSE" IF BLINKING T-STAT SERVICE LIGHT IS DESIRED.
8. DEFAULT SETTINGS FOR UPM BOARD FROM FACTORY SHOWN. ALSO SEE INSTALLATION MANUAL.
9. CHECK FOR PROPER PHASE ROTATION ON UNITS WITH SCROLL COMPRESSORS. REVERSE ROTATION WILL DAMAGE THE COMPRESSOR AND VOID UNIT WARRANTY.
10. REVERSING VALVES ARE WIRED TO A SEPARATE TRANSFORMER ON 30 TON UNITS.
11. REVERSING VALVES AND/OR RELAYS ARE NOT PRESENT IN STRAIGHT COOL UNITS.
12. P1 & P2 INTERLOCKS OF THE BLOWER MOTOR(S) MUST BE CONNECTED IN SERIES WITH TERMINALS 10 & 16 OF THE VFD TO ENABLE THE SAFETY INTERLOCK OF THE VFD AND TO PROTECT THE MOTOR(S) FROM THERMAL DAMAGE. TERMINALS 11 & 12 MUST ALSO BE CONNECTED TOGETHER.
13. X5 AND X4 TERMINALS ARE FOUND ON ABB ACH580 VFD'S ONLY.
14. FUSE PROTECTION IS REQUIRED ON ABB ACH580 MODELS PER UL-61800-5-1.
15. CMR CONNECTOR FROM DDC HARNESS WILL BE CONNECTED ACROSS PINS 4 AND 6 OF CMR1 WITH DDC SIGNAL CMR-4 GOING TO PIN GOING TO PIN 4 AND DDC SIGNAL CMR-2 GOING TO PIN 6.
16. SUPPLY AND LOAD WIRING WILL BE COMPLETED FROM FACTORY TO TB3 AND TB4. SEE HIGH VOLTAGE WIRING INSTRUCTIONS PROVIDED IN ABB INSTALLATION, OPERATION AND MAINTENANCE MANUAL PROVIDED WITH VFD.
17. BLOWER CONSTANT SPEED 1, P1 & P2 INTERLOCKS, & START/STOP SIGNALS WILL BE TERMINATED TO 7-PIN TERMINAL BLOCK (TB5), READY FOR FIELD WIRING TO BE CONNECTED FROM THE CONTROL SIGNAL WIRING THAT IS PROVIDED FROM THE FACTORY.
18. UNIT IS FACTORY PROGRAMMED USING THE "HVAC DEFAULT" MACRO TO OPERATE BLOWER MOTOR(S) AT NAMEPLATE RATED RPM SPEED. SEE INFORMATION REGARDING OPERATION AND START-UP DATA PROVIDED IN ABB INSTALLATION, OPERATION AND MAINTENANCE MANUAL PROVIDED WITH VFD.
19. BLOWER FULL SPEED SIGNAL WILL BE TERMINATED TO 2-PIN TERMINAL BLOCK (TB6), READY FOR FIELD WIRING TO BE CONNECTED FROM THE CONTROL SIGNAL WIRING THAT IS PROVIDED FROM THE FACTORY.

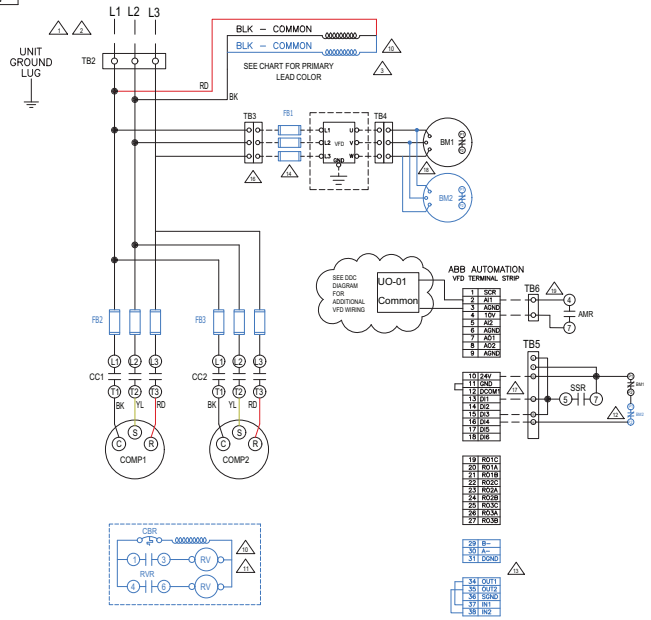

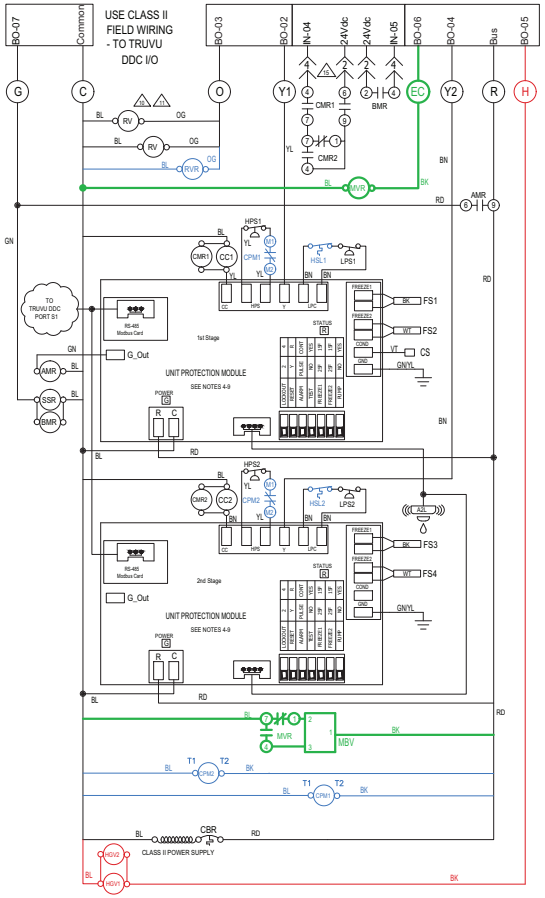

8733838198

Fig. 47 — Wiring Diagram — 50HQP 6-30 Ton Capacity (Field-Installed VFD), Three Phase, Staged Air Volume, TruVu™ DDC, Options (WSE, HGRH, HGBP)

FACTORY INSTALLED COMPONENTS (OUTPUTS):
UO-1 - UNIVERSAL OUTPUT 1:
[ ] G1 - FAN ON (PSC & CT ECM)
[ ] ECM - FAN MODULATION (CA ECM PWM)
[ ] VFD - FAN MODULATION (VFD 0-10VDC)

AO-2 - ANALOG OUTPUT 2:
[ ] MRV - MODULATING REHEAT VALVE

BO-2 - BINARY OUTPUT 2:
[ ] Y1 - COMPRESSOR

BO-3 - BINARY OUTPUT 3:
[ ] O - REVERSING VALVE

BO-4 - BINARY OUTPUT 4:
[ ] Y2 - COMPRESSOR (TWO STAGE/SPEED)
[ ] WSE - WATER-SIDE ECONOMIZER VALVE (SINGLE STAGE)
[ ] W1 - AUX HEAT 1ST STAGE (SINGLE STAGE)

BO-5 - BINARY OUTPUT 5:
[ ] H - DEHUMIDIFICATION (HGRH)
[ ] W1 - AUX HEAT 1ST STAGE (SINGLE OR TWO STAGE/SPEED)

BO-6 - BINARY OUTPUT 6:
[ ] G2 - FAN ON (CT ECM)
[ ] WSE - WATER-SIDE ECONOMIZER VALVE (TWO STAGE)
[ ] W2 - AUX HEAT 2ND STAGE (TWO STAGE/SPEED)

BO-7 - BINARY OUTPUT 7:
[ ] G3 - FAN ON (CT ECM)
[ ] VFD - VFD ENABLE/DISABLE

STANDARD FACTORY INSTALLED COMPONENTS (INPUTS):
IN-2 - UNIVERSAL INPUT 2:
[ ] LWTS - LEAVING WATER TEMPERATURE SENSOR

IN-3 - UNIVERSAL INPUT 3:
[ ] EWTS - ENTERING WATER TEMPERATURE SENSOR

STANDARD FACTORY PROVIDED COMPONENTS (INPUTS):
IN-1 - UNIVERSAL INPUT 1:
[ ] SATS - SUPPLY AIR TEMPERATURE SENSOR

IN-6 - UNIVERSAL INPUT 6:
[ ] RATS - RETURN AIR TEMPERATURE SENSOR

OPTIONAL FACTORY INSTALLED COMPONENTS (INPUTS):
IN-7 - UNIVERSAL INPUT 7:
[ ] DPS - DIFFERENTIAL PRESSURE SWITCH

OPTIONAL FIELD INSTALLED COMPONENTS (INPUTS):
IN-6 - UNIVERSAL INPUT 6:
[ ] SPT - SPACE TEMPERATURE SENSOR

IN-7 OR 8 - UNIVERSAL INPUT 7 OR 8:
[ ] EMSD - EMERGENCY SHUTDOWN
[ ] OCC - REMOTE OCCUPANCY
[ ] SCO - SECONDARY CONDENSATE OVERFLOW
[ ] FS - FLOW SWITCH
[ ] FM - WATER FLOW METER

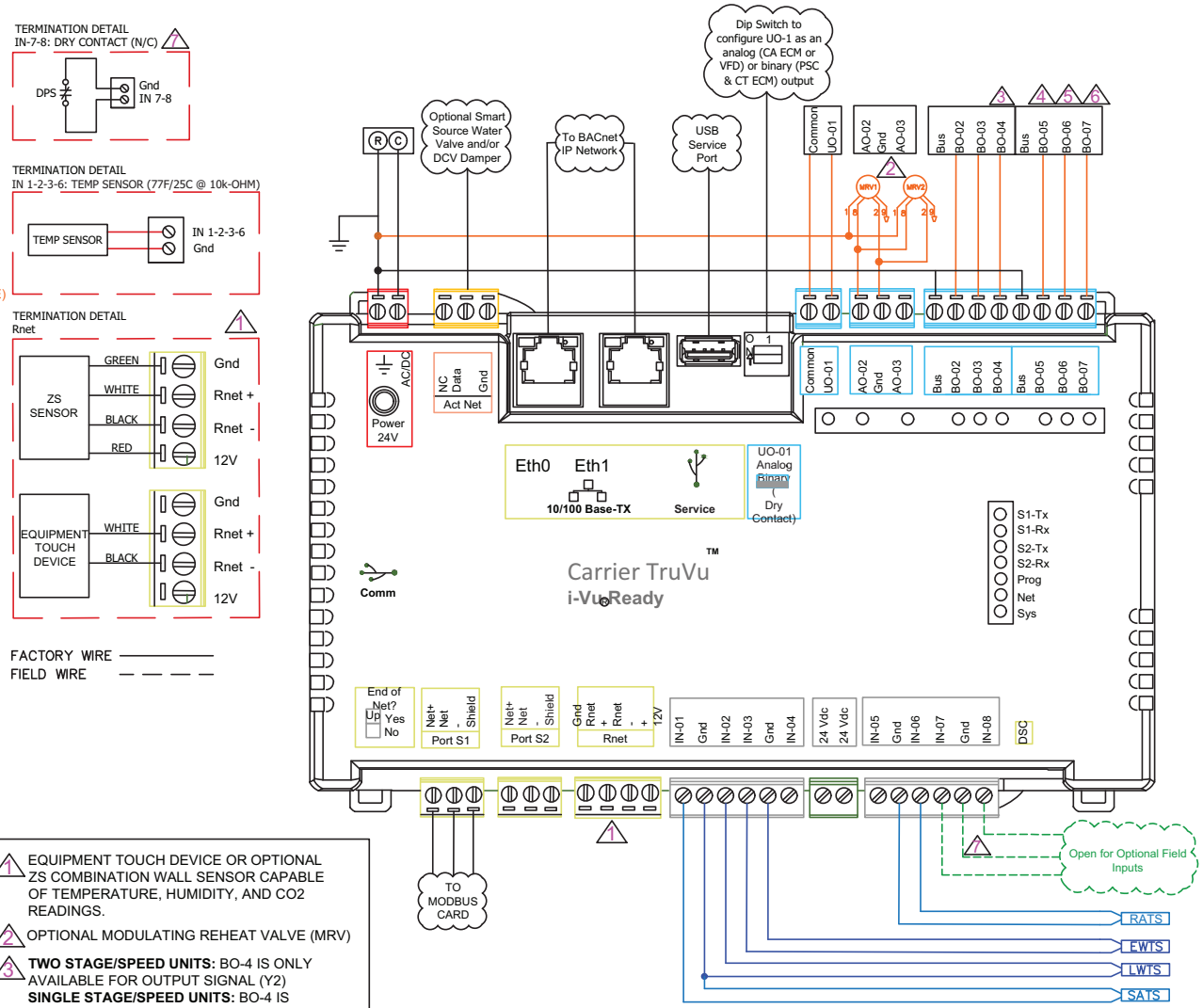

1. EQUIPMENT TOUCH DEVICE OR OPTIONAL ZS COMBINATION WALL SENSOR CAPABLE OF TEMPERATURE, HUMIDITY, AND CO2 READINGS.
2. OPTIONAL MODULATING REHEAT VALVE (MRV)
3. **TWO STAGE/SPEED UNITS:** BO-4 IS ONLY AVAILABLE FOR OUTPUT SIGNAL (Y2)
   SINGLE STAGE/SPEED UNITS: BO-4 IS AVAILABLE FOR WSE
4. H SIGNAL IS USED ON REHEAT APPLICATIONS
5. **TWO STAGE/SPEED UNITS:** BO-6 IS AVAILABLE FOR WSE OUTPUT SIGNAL
   SINGLE STAGE/SPEED UNITS: BO-6 IS AVAILABLE FOR FAN ON G2 OUTPUT SIGNAL
6. IN-07 UTILIZED FOR OPTIONAL FACTORY INSTALLED DIFFERENTIAL PRESSURE FLOW SWITCH WHEN EQUIPPED

8733837662

Fig. 48 — TruVu™ DDC Wiring Diagram

STATUS LED/ALARM BLINK CODES	
1	HIGH PRESSURE FAULT – CKT 1
2	LOW PRESSURE FAULT – CKT 1
3	HIGH PRESSURE FAULT – CKT 2
4	LOW PRESSURE FAULT – CKT 2
5	FREEZE SENSOR 1 FAULT
6	CONDENSATE FAULT
7	BROWN OUT FAULT
8	FREEZE SENSOR 2 FAULT
9	FREEZE SENSOR 3 FAULT
10	FREEZE SENSOR 4 FAULT
11	REFRIGERANT LEAK FAULT
12	2ND STAGE COMMUNICATION FAULT

COLOR CHART LEGEND	
ABBREVIATION	COLOR
BK	BLACK
BL	BLUE
BN	BROWN
GY	GRAY
GN	GREEN
OG	ORANGE
RD	RED
VT	VIOLET
WT	WHITE
YL	YELLOW

FACTORY WIRE ————

FIELD WIRE — — —

STANDARD COMPONENTS LEGEND:

#1 - FIRST STAGE
#2 - SECOND STAGE
A2L - AIR TO LIQUID REFRIGERANT LEAK SENSOR
AMR - A2L MITIGATION RELAY
BM1 - BLOWER MOTOR (1 OR 2 PER UNIT)
BMR - BLOWER MONITOR RELAY
CBR - 24VAC CIRCUIT BREAKER
CC - COMPRESSOR CONTACTOR
CMR - COMPRESSOR MONITOR RELAY
CS - CONDENSATE SENSOR (1 PER DRAIN PAN)
CSS - COMPRESSOR SENSOR SWITCH
FS - FREEZE SENSOR
HPS - HIGH PRESSURE SWITCH
LPS - LOW PRESSURE SWITCH
P1,P2 - BLOWER MOTOR PROTECTION (INVERTER BLOWERS ONLY)
RV - REVERSING VALVE (HEAT PUMPS ONLY)
SSR - START/STOP RELAY
TB2 - TERMINAL BLOCK (HIGH VOLTAGE)
TB3 - VFD TERMINAL BLOCK (HIGH VOLTAGE)
VFD - VARIABLE FREQUENCY DRIVE

OPTIONAL COMPONENTS LEGEND:

[ ] BM2 - BLOWER MOTOR
[ ] CPM - COMPRESSOR PROTECTION MODULE (15 TON AND LARGER COMPRESSORS)
[ ] FB1 - VFD FUSE BLOCK (WITH ACH580 MODEL ONLY)
[ ] FB2, FB3 - FUSE BLOCK (15 TON AND LARGER COMPRESSORS)
[ ] HSL - HIGH TEMPERATURE SUCTION LIMIT (WITH HGBP ONLY)
[ ] MBV - MOTORIZED BALL VALVE (ECONOMIZER)
[ ] MVR - MOTORIZED BALL VALVE RELAY (ECONOMIZER)
[ ] RVR - REVERSING VALVE RELAY

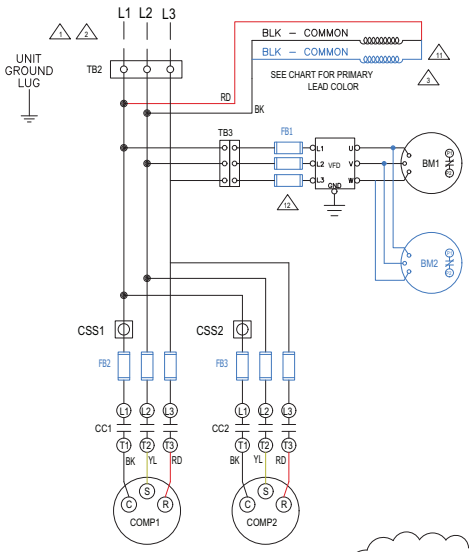

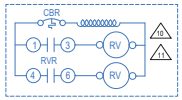

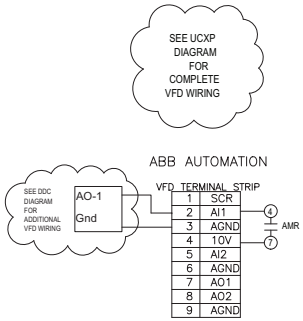

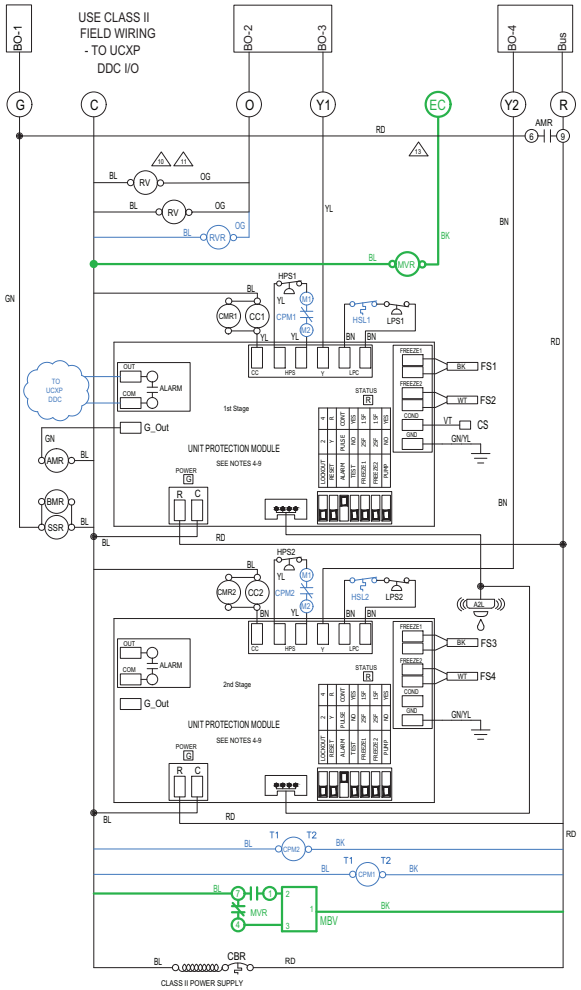

NOTES:

1. SEE UNIT NAME PLATE FOR ELECTRICAL RATING
2. ALL FIELD WIRING MUST BE IN ACCORDANCE WITH N.E.C.-N.F.P.A. #70, COPPER CONDUCTORS ONLY. CONDUCTEURS EN CUIVRE SEULEMENT.
3. 208/230V UNITS ARE FACTORY WIRED FOR 230V OPERATION. FOR 208V OPERATION, REMOVE 240V LEAD AND CONNECT IT TO 208V. CAP ALL UNUSED LEADS..
4. UPM-I INCLUDES BUILT IN: 270-300 SECOND RANDOM START
   300 SECOND DELAY ON BREAK
   120 SECOND LOW PRESSURE BYPASS
   120 SECOND FREEZE PROTECTION BYPASS
5. "TEST" DIP SWITCH REDUCES DELAYS TO 10 SEC WHEN SET TO YES. MUST BE SET TO "NO" FOR NORMAL OPERATION.
6. "FREEZE SENSOR" ON CONDENSER WILL BE SET TO 25°F BY DEFAULT. IF 15°F OPERATION IS REQUIRED, MOVE DIP SWITCH SLIDER TO THE 15°F POSITION.
7. "ALARM OUTPUT" DIP SWITCH MUST BE SET TO "PULSE" IF BLINKING T-STAT SERVICE LIGHT IS DESIRED.
8. DEFAULT SETTINGS FOR UPM BOARD FROM FACTORY SHOWN. ALSO SEE INSTALLATION MANUAL.
9. CHECK FOR PROPER PHASE ROTATION ON UNITS WITH SCROLL COMPRESSORS. REVERSE ROTATION WILL DAMAGE THE COMPRESSOR AND VOID UNIT WARRANTY.
10. REVERSING VALVES ARE WIRED TO A SEPARATE TRANSFORMER ON 30 TON UNITS.
11. REVERSING VALVES AND/OR RELAYS ARE NOT PRESENT IN STRAIGHT COOL UNITS.
12. FUSE PROTECTION IS REQUIRED ON ABB ACH580 MODELS PER UL-61800-5-1.
13. OPTIONAL ECONOMIZER SIGNAL WILL BE PROVIDED BY UCXPIO CONTROLLER.

8733838210

Fig. 49 — Wiring Diagram — 50VQP 18-30 Ton Capacity, Three Phase, VAV Unit, SCU Open, Options (WSE)

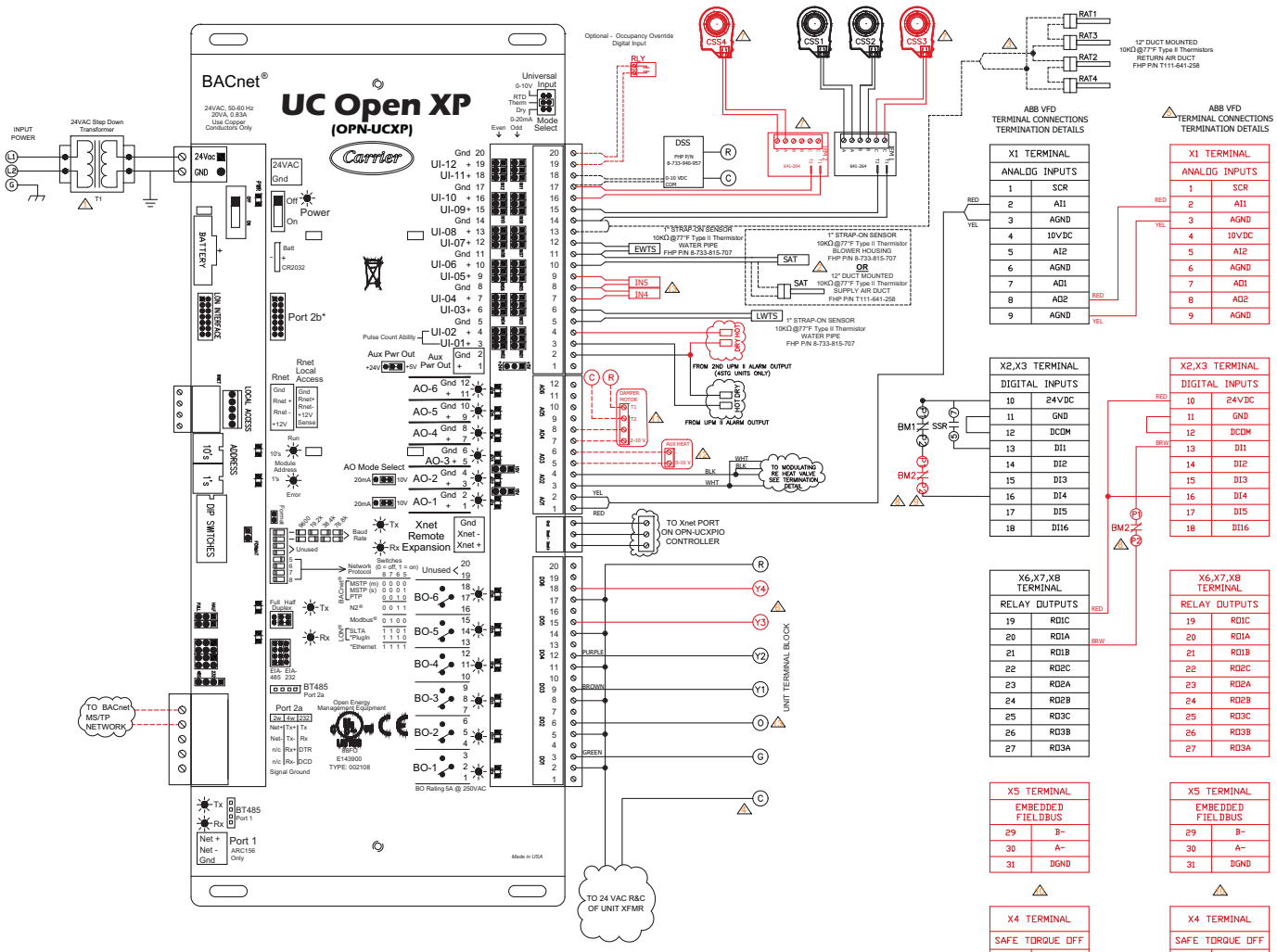

STANDARD COMPONENTS:

EWTS - ENTERING WATER TEMPERATURE SENSOR
LWTS - LEAVING WATER TEMPERATURE SENSOR
MRV - MODULATION REHEAT VALVE
RAT - RETURN AIR TEMPERATURE SENSOR(S)
SAT - SUPPLY AIR TEMPERATURE SENSOR
BM1 - BLOWER MOTOR 1

OPTIONAL COMPONENTS:

[ ] BM2 - BLOWER MOTOR 2
[ ] CSS - COMPRESSOR STATUS SWITCHES
[ ] DSS - DUCT STATIC SENSOR
[ ] IEM - INPUT EXPANSION MODULE(S)
[ ] IN4 - CO2 SENSOR
[ ] IN5 - RELATIVE HUMIDITY SENSOR

TERMINATION DETAIL
8in AND CO2 SENSORS

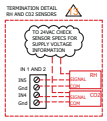

TERMINATION DETAIL
MODULATING RE-HEAT VALVES

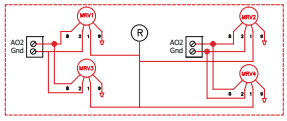

△1 CONTROLLER IS POWERED BY DEDICATED TRANSFORMER

△2 SINGLE SUPPLY AIR TEMPERATURE SENSOR FIELD TERMINATED @ UI06. PROBE SENSOR PROVIDED FOR DUCT MOUNTED APPLICATIONS (FIELD INSTALLED), STRAP-ON SENSOR PROVIDED FOR BLOWER HOUSING MOUNTED APPLICATIONS (FACTORY INSTALLED)

△3 RETURN OR MIXED AIR TEMPERATURE CONTROL SENSORS WIRED AS SHOWN AND FIELD TERMINATED @ UI08

△4 TRANSFORMERS COMMON TERMINALS ARE TIED TOGETHER

△5 2ND VFD PRESENT ON 40 TON THROUGH 60 TON CAPACITY ONLY.

△6 Y3 & Y4 SIGNALS PRESENT ON 4STG UNITS ONLY

△7 CSS3, CSS4 AND IEM2 PRESENT ON 4STG UNITS ONLY

△8 FOR 4 STAGE APPLICATION, P1/P2 INTERLOCK OF BLOWER MOTOR 2 IN SERIES WITH DI1 ON SECOND VFD

△9 P1 & P2 INTERLOCKS OF THE BLOWER MOTOR(S) MUST BE CONNECTED WITH TERMINALS 10 & 16 OF EACH VFD TO ENABLE THE SAFETY INTERLOCK OF THE VFD AND TO PROTECT THE MOTOR (S) FROM THERMAL DAMAGE. TERMINALS 11 & 12 MUST ALSO BE CONNECTED TOGETHER

△10 X5 AND X4 TERMINALS ARE FOUND ON ABB ACH580 VFD'S ONLY.

△11 OPTIONAL FIELD SUPPLIED MODULATING FRESH AIR DAMPER.

△12 OPTIONAL FIELD SUPPLIED AUXILIARY HEAT.

△13 O SIGNAL WILL NOT BE PRESENT ON COOLING ONLY UNITS.

------ DENOTES FIELD TERMINATED COMPONENTS
——— DENOTES STANDARD WIRING
——— DENOTES OPTIONAL WIRING

Fig. 50 — SCU VAV Open DDC Wiring Diagram

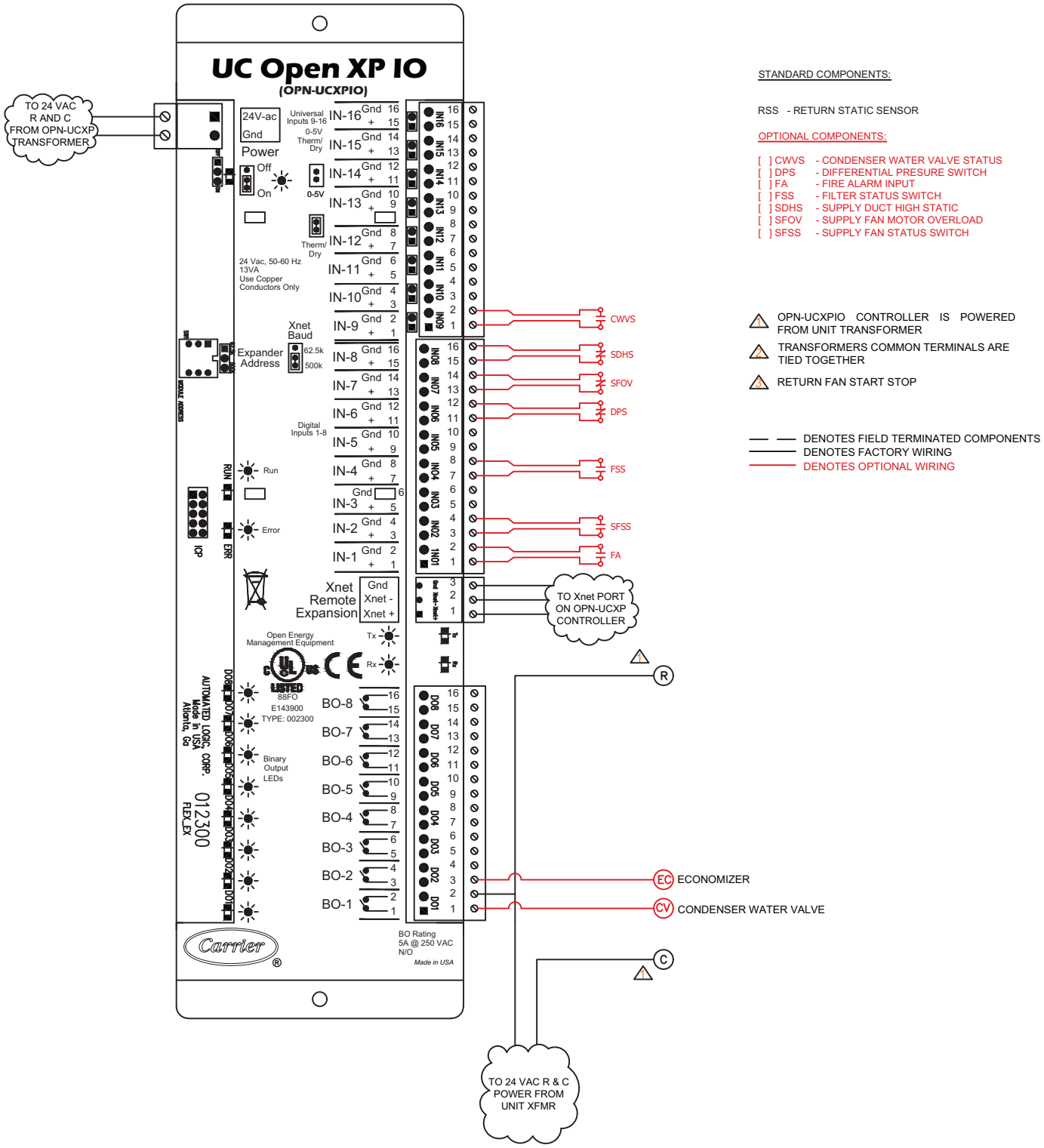

Fig. 51 — SCU VAV Open DDC Expander Wiring Diagram

Table 5 — 50HQP072-096 — Standard Duty Motor (without VFD) — Electrical Data

UNIT SIZE	v/Ph/Hz	VOLTAGE		COMPRESSOR			MOTOR			MCA	MOCP
		MIN	MAX	QTY	RLA (each)	LRA (each)	QTY	HP	FLA		
072	208/230-1-60	197	253	2	16.7	93.5	1	1.0	7.0	44.5	60
								1.5	8.5	46.0	60
								2.0	9.8	47.3	60
096	208/230-1-60	197	253	2	22.4	126.0	1	1.5	8.5	59.0	80
								2.0	9.8	60.3	80

Table 6 — 50VQP072-120 — Standard Duty Motor (without VFD) — Electrical Data

UNIT SIZE	v/Ph/Hz	VOLTAGE		COMPRESSOR			MOTOR			MCA	MOCP
		MIN	MAX	QTY	RLA (each)	LRA (each)	QTY	HP	FLA		
072	208/230-1-60	197	253	2	16.7	93.5	1	1.0	7.0	44.5	60
								1.5	8.5	46.0	60
								2.0	9.8	47.3	60
096	208/230-1-60	197	253	2	22.4	126.0	1	1.5	8.5	59.0	80
								2.0	9.8	60.3	80
120	208/230-1-60	197	253	2	25.6	126.0	1	2.0	9.8	67.5	90

Table 7 — 50HQP072-242 — Inverter Duty Motor (with VFD) — Electrical Data

UNIT SIZE	v/Ph/Hz	VOLTAGE		COMPRESSOR			MOTOR			MCA	MOCP
		MIN	MAX	QTY	RLA (each)	LRA (each)	QTY	HP	FLA		
072	208/230-3-60	197	253	2	12.2	97.5	1	2.0	6.2	33.6	45
								3.0	8.8	36.2	45
	460-3-60	414	506	2	5.8	44.3	1	2.0	3.1	16.1	20
								3.0	4.3	17.3	20
096	208/230-3-60	197	253	2	12.8	120.4	1	2.0	6.2	35.0	45
								3.0	8.8	37.6	50
	460-3-60	414	506	2	6.0	49.4	1	2.0	3.1	16.7	20
								3.0	4.3	17.9	20
120	208/230-3-60	197	253	2	18.6	155.0	1	3.0	8.8	50.6	60
								5.0	13.5	55.3	70
	460-3-60	414	506	2	8.3	58.1	1	3.0	4.3	22.9	30
								5.0	6.2	24.8	30
150	208/230-3-60	197	253	2	19.2	156.5	1	3.0	8.8	52.1	70
								5.0	13.5	56.8	70
	460-3-60	414	506	2	9.0	74.8	1	3.0	4.3	24.5	30
								5.0	6.2	26.4	35
180	208/230-3-60	197	253	2	22.4	166.2	2	2.0	6.2	62.7	80
								3.0	8.8	67.9	90
								5.0	13.5	77.3	90
	460-3-60	414	506	2	8.8	74.6	2	2.0	3.1	26.1	30
								3.0	4.3	28.5	35
								5.0	6.2	32.3	40
242	208/230-3-60	197	253	2	28.5	255.0	2	2.0	6.2	76.6	100
								3.0	8.8	81.8	110
								5.0	13.5	91.2	110
	460-3-60	414	506	2	13.5	123.0	2	2.0	3.1	36.5	45
								3.0	4.3	38.9	50
								5.0	6.2	42.7	50

Table 8 — 50VQP072-360 — Inverter Duty Motor (with VFD) — Electrical Data

UNIT SIZE	v/Ph/Hz	VOLTAGE		COMPRESSOR			MOTOR			MCA	MOCP
		MIN	MAX	QTY	RLA (each)	LRA (each)	QTY	Hp	FLA		
072	208/230-3-60	197	253	2	12.2	97.5	1	2.0	6.2	33.6	45
								3.0	8.8	36.2	45
	460-3-60	414	506	2	5.8	44.3	1	2.0	3.1	16.1	20
								3.0	4.3	17.3	20
096	208/230-3-60	197	253	2	12.8	120.4	1	2.0	6.2	35.0	45
								3.0	8.8	37.6	50
	460-3-60	414	506	2	6.0	49.4	1	2.0	3.1	16.7	20
								3.0	4.3	17.9	20
120	208/230-3-60	197	253	2	18.6	155.0	1	2.0	6.2	48.0	60
	460-3-60	414	506	2	8.3	58.1	1	2.0	3.1	21.7	25
	575-3-60	518	632	2	7.7	47.8	1	2.0	2.0	19.3	25
120	208/230-3-60	197	253	2	18.6	155.0	1	3.0	8.8	50.6	60
								5.0	13.5	55.3	70
	460-3-60	414	506	2	8.3	58.1	1	3.0	4.3	22.9	30
								5.0	6.2	24.8	30
151	208/230-3-60	197	253	2	19.2	156.5	1	3.0	8.8	52.1	70
								5.0	13.5	56.8	70
	460-3-60	414	506	2	9.0	74.8	1	3.0	4.3	24.5	30
								5.0	6.2	26.4	35
181	208/230-3-60	197	253	2	22.4	166.2	1	5.0	13.5	63.8	80
	460-3-60	414	506	2	8.8	74.6	1	5.0	6.2	26.1	30
	575-3-60	518	632	2	7.2	54.0	1	5.0	4.5	20.7	25
210	208/230-3-60	197	253	2	28.7	207.5	2	2.0	6.2	76.9	100
								3.0	8.8	82.1	110
								5.0	13.5	91.5	110
	460-3-60	414	506	2	12.4	100.2	2	2.0	3.1	34.2	45
								3.0	4.3	36.6	45
								5.0	6.2	40.4	50
240	208/230-3-60	197	253	2	28.5	255.0	2	2.0	6.2	76.6	100
								3.0	8.8	81.8	110
								5.0	13.5	91.2	110
	460/3/60	414	506	2	13.5	123.0	2	2.0	3.1	36.5	45
								3.0	4.3	38.9	50
								5.0	6.2	42.7	50
300	208/230-3-60	197	253	2	40.8	270.0	2	3.0	8.8	109.3	150
								5.0	13.5	118.7	150
	460/3/60	414	506	2	19.4	147.0	2	3.0	4.3	52.3	70
								5.0	6.2	56.1	70
360	208/230-3-60	197	253	2	49.0	386.3	2	5.0	13.5	137.2	175
	460/3/60	414	506	2	24.0	182.0	2	5.0	6.2	66.3	90

LEGEND

FLA — Full Load Amps
HACR — Heating, Air Conditioning, and Refrigeration
LRA — Locked Rotor Amps
RLA — Rated Load Amps

Step 9 — Low Voltage Controls Wiring

All control wiring is connected to a terminal block located in the unit electrical box. Refer to the unit wiring diagrams in Fig. 37-49 for connection details.

⚠ WARNING

To avoid possible injury or death due to electrical shock, open the power supply disconnect switch and secure it in an open position during installation.

⚠ CAUTION

Never route control wiring through the same conduit as power supply wiring. Electrical noise and transients from the power wiring can cause communication issues or damage to the control wiring and connected control components.

Units without factory installed TruVu™ DDC controller can be controlled using the included thermostat inputs (R, O, Y1, Y2, C, G) for two stage heat pump thermostat or field-installed DDC (Direct Digital Controls) controls. Note that the reversing valve on the unit is energized when the unit is in the cooling mode. See Fig. 52 for typical thermostat connections.

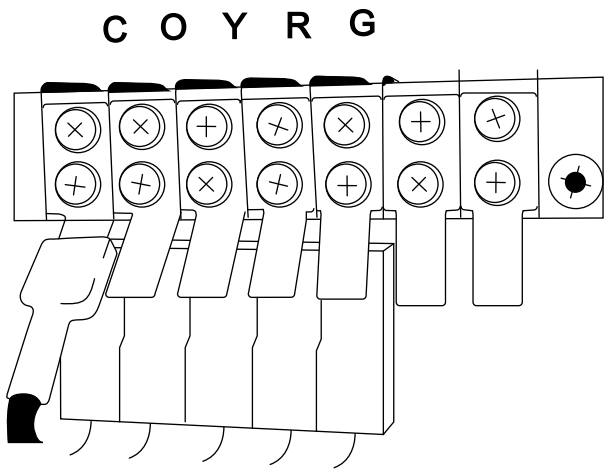

Fig. 52 — Typical Thermostat Connections

THERMOSTAT AND DDC SENSORS

Thermostats or DDC space sensors should be located on an interior wall away from supply ducts. Avoid locations subject to direct sunlight or drafts, or external walls. Thermostat wiring should be 18 AWG (American Wire Gauge). Refer to the installation instructions for the thermostat for further details.

IMPORTANT: Exceptionally long runs of thermostat wire should be avoided to prevent voltage drops in the control circuit.

Additional Controls Options Wiring

HOT GAS REHEAT CONTROL

Units with hot gas reheat (HGRH) will include an additional H terminal on the input terminal board for dehumidification control. To enable a call for dehumidification, a 24V signal must be sent to the H terminal with no voltage applied to the Y1, Y2, or O terminals. Any call for cooling (Y1 and O) will override the dehumidification call.

PUMP RELAY

Units with selected Pump Relay option can be field wired to enable a field provided loop pump or solenoid valve when there is a call for compressor operation.

ENERGY MANAGEMENT SWITCH

Units with selected energy management switch (EMS) option can be field wired to disable unit operation when a 24V signal is removed from the relay. Removing the 24V signal causes the relay to open, which cuts 24V power to the unit control circuit. All unit components will be disabled when the EMS is deactivated. See Fig. 46.

BOILERLESS HEAT CONTROL

All units with boilerless heat control (BE) option include a boilerless heat relay that can be field wired to enable an external heat source when the water loop temperature drops below the boilerless heat control set point.

ALARM OUTPUT (ALL UNITS)

If the unit is being connected to a thermostat or DDC control with an alarm indicator, this connection is made at the unit malfunction output on the Unit Protection Module (UPM). See the Unit Protection Module heading in Step 10 — Configure Unit Control Components on page 56 for further details.

CONDENSERLESS (FOR UNITS WITH FIELD PROVIDED REMOTE CONDENSER)

Remote condenser must be field wired and interlocked with compressor call (Y1) to energize remote condenser.

HOT WATER COIL (HWC)

The field provided and installed 2 position or modulating control valve shall be field wired to the controller of the unit.

Refer to the SCU Open Controller guide for AO that can be used for HWC controls and sequence of operation.

Refer to the TruVu™ controller integration guide for BO/AO that can be used for HWC controls and sequence of operation.

TRUVU™ DDC CONTROLLER

TruVu™ is a factory installed DDC control that requires the use of Carrier ZS or non-communicating sensors or the Carrier TruVu™ Equipment touch interface for space temperature sensing. TruVu™ is not compatible with thermostats. All TruVu™ wiring is completed at the TruVu™ control board. For further instructions on TruVu™ DDC, please visit HVACPartners.com or Carrier.com for the TruVu™ Integration Guide and Points/Properties Guide.

All units equipped with TruVu™ DDC controller include factory-installed EWT, LWT, and SAT sensors. Additional field-installed sensors should be provided and wired as needed. Please refer to the Operation section of the Installation, Operation, and Maintenance (IOM) manual for available inputs for optional field-installed components.

IMPORTANT: Relocate the factory installed supply air temperature sensor (SAT) when using a field-installed electric heater. The Supply Air Temperature (SAT) sensor should be downstream of any external heating device for effective control.

SCU OPEN CONTROLLER (VAV UNITS ONLY)

See SCU VAV Open Controller manual for complete details regarding control wiring for VAV units. Refer to Table 9 for recommended cable use.

Table 9 — Recommended Cables

MANUFACTURER	PART NUMBER
Alpha	2413 or 5463
American	A22503
Belden	8772
Columbia	02525

CONTROL TRANSFORMER

Units without HGRH or waterside economizer include a 75VA transformer. Units with HGRH, WSE, Boilerless control, TruVu™ DDC or SCU Open DDC include a 100VA transformer. The VA capacity of the transformer should be considered when applying low voltage accessories, such as shut off valves, thermostats, or DDC controls. Table 10 shows the VA draw of factory-mounted components in the low voltage heat pump. The total VA draw of the heat pump internal components plus any attached accessories must be lower than the VA capacity of the unit control transformer.

⚠ CAUTION

Exceeding the transformer capacity can result in low control voltage, erratic unit operation or damage to the heat pump.

Table 10 — Low Voltage VA Draw

STANDARD CONSTRUCTION	
Component	**VA**
Reversing Valve Solenoid 1	12
Reversing Valve Solenoid 2	12
Compressor Contactor 1	10
Compressor Contactor 2	10
Blower Contactor	10
UPM Board - First Stage	5
UPM Board - Second Stage	5
TOTAL VA DRAW	64
REFRIGERANT OPTIONS	
Component	**VA**
Total from "Standard Construction" (above)	64
Hot Gas Reheat Solenoid 1	9
Hot Gas Reheat Solenoid 2	9
Economizer Valve	3
TOTAL VA DRAW	85

ELECTRICAL OPTIONS	
Component	**VA**
SCU Open DDC	26
683 TruVu™ DDC	37
Reversing Valve Relay	10
Aux Relay	10
Hot Gas Reheat Relay 1	4
Hot Gas Reheat Relay 2	4
Economizer Relay	4
Boilerless Control Relay	4
Cooling Relay	4
Heating Relay	4
Compressor Monitor Relay	4
Blower Motor Relay	4
Energy Management Relay	4
Fire Alarm Relay	4

SAV VFD FIELD CONTROL WIRING (50HQP UNITS ONLY)

When horizontal units are ordered with the single speed VFD option the VFD will ship loose in a VFD enclosure for field installation. Follow these steps to complete the necessary field control wiring:

1. Disconnect unit power and remove the unit compressor/control access panel and the control box accesses panel.
2. Make the field wiring connections between VFD control terminals 10 (24V), 13 (DI1), 14 (DI2), 15 (DI3), and terminals block 5 (TB5) located in the electrical control box. See Fig. 53.

NOTE: All remote VFD field wiring must be installed per local codes and requirements.

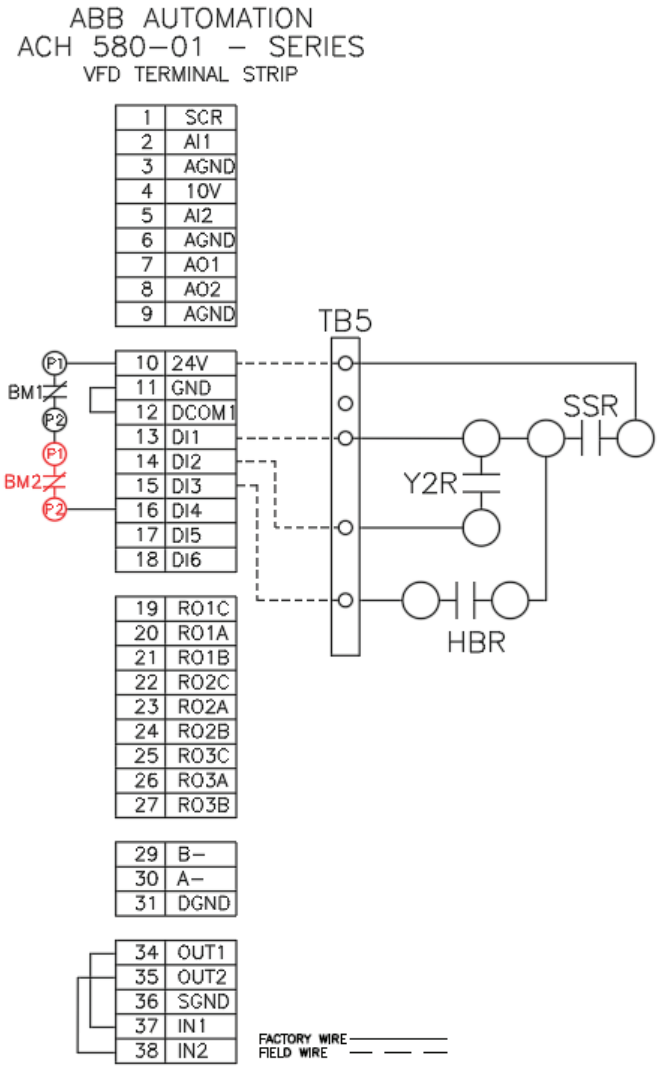

Fig. 53 — SAV VFD Field Control Wiring (50HQP Only)

Step 10 — Configure Unit Control Components

UNIT PROTECTION MODULE (UPM)

The Unit Protection Module (UPM) as shown in Fig. 54 is a printed circuit board (PCB) included in all units, that interfaces with the thermostat or the digital direct controller.

The main purpose of this device is to protect the compressors by monitoring the different states of switches and sensors of each refrigerant circuit. This device provides time delays and protects the unit against freezing of the water and refrigerant heat exchangers as well as condensate overflow when the appropriate sensors are installed.

All 50HQP/50VQP units have 2 factory installed UPM boards, one dedicated to each circuit of the unit.

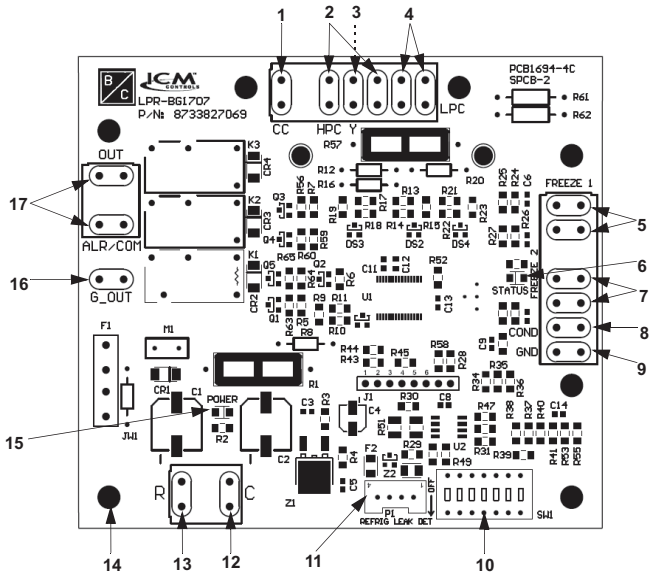

1	Compressor Contact Output
2	High Pressure Switch Connection
3	Call for Compressor (Y1)
4	Low-Pressure Switch Connection
5	Water Coil Freeze Connection (FREEZE 1)
6	UPM Status LED Indicator (fault status)
7	Air Coil Freeze Connection (FREEZE 2)
8	Condensate Overflow Sensor Connection
9	Ground
10	UPM Settings DIP Switch (SW1)
11	A2L Sensor
12	24 Vac Power Connection
13	24 Vac Power Input
14	UPM Standoff
15	Power LED
16	Fan
17	Dry Contact

Fig. 54 — Unit Protection Module (UPM)

UPM STANDARD SAFETIES AND ALARMS

Features of the unit protection module include:

High and Low Refrigerant Pressure Protection

- High-Pressure switch located in the refrigerant discharge line and wired across the HPC (High-Pressure Switch Connection) terminals on the UPM.
- Low-Pressure switch located in the unit refrigerant suction line and wired across the LPC (Low-Pressure Switch Connection) terminals (LPC1 and LPC2) on the UPM.

Water Coil Freeze Protection

Waterside freeze protection sensor, mounted close to condensing water coil (see Fig. 55), monitors refrigerant temperature between condensing water coil and thermal expansion valve.

If temperature drops below or remains at freeze limit trip for 120 seconds, the controller will shut down the compressor and enter into a soft-lockout condition. The default freeze limit trip is 25°F; however, this can be changed to 15°F by flipping DIP switch SW1. Refer to Fig. 54, item 10, Fig. 57, and Table 11.

IMPORTANT: The freeze sensor will not guard against the loss of water. A flow switch is recommended to prevent the unit from running if water flow is lost or reduced.

IMPORTANT: If the unit is employing a fresh water system (no anti-freeze protection), it is extremely important to have the Freeze 1 set to 25°F (DIP Switch SW1 set to OFF) in order to shut down the unit at the appropriate leaving water temperature and protect your heat pump from freezing if a freeze sensor is included.

Table 11 — UPM DIP Switch Selectable Positions

TOGGLE	FUNCTION	ON	OFF	FACTORY DEFAULT
1	Lockout	4	2	2
2	Reset	R	Y	Y
3	Alarm	CONT	PULSE	PULSE
4	Test	YES	NO	NO
5	Freeze 1	15°F	25°F	25°F
6	Freeze 2	15°F	25°F	25°F
7	Pump	ON	OFF	OFF

Air Coil Freeze Protection

Air coil freeze protection sensor, mounted between the thermal expansion device and the evaporator (see Fig. 56), monitors refrigerant temperature between the evaporator coil and the thermal expansion valve. If temperature drops below or remains at the freeze limit trip for 30 seconds, the controller will shut down the compressor and enter into a soft-lockout condition. The default freeze limit trip is 25°F, this can be changed to 15°F by flipping DIP switch SW1. (See Fig. 54, Item 10, Fig. 57, and Table 11.)

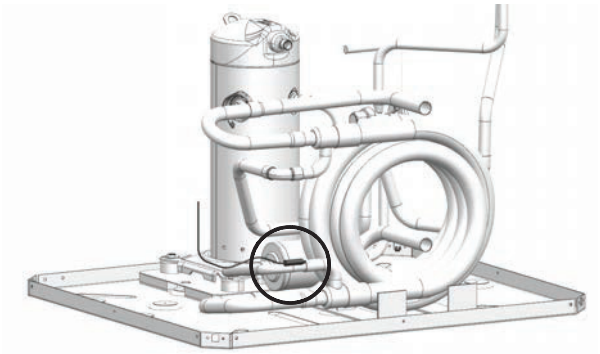

Fig. 55 — Waterside Freeze Protection Sensor

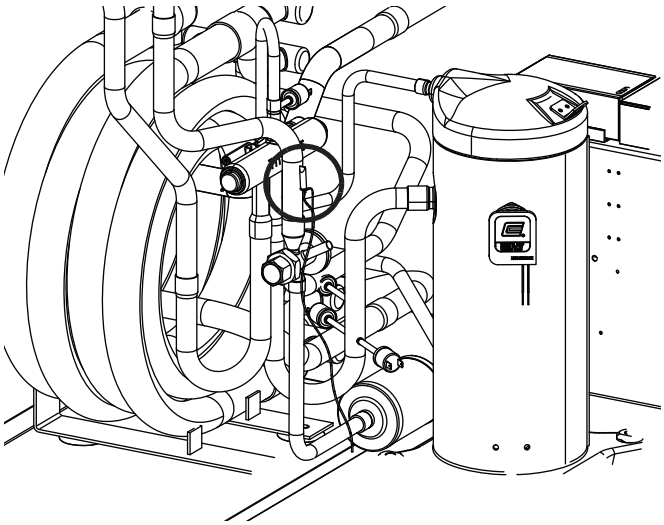

Fig. 56 — Air Coil Freeze Protection Sensor

High Condensate Level Shutdown

The condensate overflow protection sensor is located in the drain pan of the unit and connected to the "COND" terminal on the UPM board. (See Fig. 54, item 8.)

Anti-Short Cycle Timer

Five-minute delay on break timer to prevent compressor short cycling.

Random Start Time Delay

Each controller has a unique random start delay ranging from 270 to 300 seconds on initial power up to reduce the chance of multiple units simultaneously starting at the same time after power up or after a power interruption, in order to avoid creating a large electrical spike.

Low Pressure Bypass Timer

If the compressor is running and the low-pressure switch opens, the controller will keep the compressor ON for 120 seconds. After 2 minutes, if the low-pressure switch remains open, the controllers will shut down the compressor and enter a soft lockout. The compressor will not be energized until the low-pressure switch closes and the anti-short cycle time delay expires. If the low-pressure switch opens two or four times in one hour, the unit will enter a hard lockout. In order to exit hard lockout, power to the unit must be reset. The reset signal is either a "Y" or "R" signal, depending on the position of the DIP Switch as shown in Table 11. If the reset is set to "R," the board must be manually powered off and powered back on to exit the hard lockout.

Brownout/Surge/Power Interruption Protection

The brownout protection in the UPM Board will shut down the compressor if the incoming power falls below 18vac. The compressor will remain OFF until the voltage is above 18vac and the Anti-Short Cycle Timer (300 seconds) times out. The unit will not go into a hard lockout.

Alarm Output

Alarm output is Normally Open (NO) dry contact. If pulse is selected the alarm output will be pulsed. The fault output will depend on the DIP Switch setting for "ALARM." If set to "CONST," a constant signal will be produced to indicate a fault has occurred and the unit requires inspection to determine the type of fault. If it is set to "PULSE," a pulse signal is produced and a fault code is detected by a remote device indicating the fault. For blink code explanation, see Table 12. The remote device must have an analog input with malfunction detection capability to interpret PULSE signal when the UPM Board is set to "PULSE."

IMPORTANT: If 24 VAC output is needed R must be wired to ALR-COM terminal; 24 VAC will be available to the ALR-OUT terminal when the unit is in the alarm condition.

Test DIP Switch

A test DIP Switch is provided to reduce all time delay settings to 10 seconds during troubleshooting or verification of unit operation.

IMPORTANT: Operation of the unit in test mode can lead to accelerated wear and premature failure of components. The "TEST" switch must be set back to "NO" after troubleshooting or servicing is complete.

Intelligent Alarm Reset

If fault condition is initiated, the five-minute delay on break time period is initiated and the unit will restart after these delays expire. During this period the fault LED will indicate the cause of the fault. If the fault condition still exists or occurs two or four times (depending on "2" or "4" setting for Lockout DIP Switch) before 60 minutes, the unit will go into a hard lockout and requires a manual lockout reset.

Hard Lockout Reset

A hard lockout can be reset by turning the unit thermostat off and then back on when the "RESET" DIP Switch is set to "Y" or by shutting off unit power at the circuit breaker when the "RESET" DIP Switch is set to "R."

NOTE: The blower motor will remain active during a lockout condition.

Table 12 — UPM Fault Blink Codes

BLINKS	FAULT	FAULT CRITERIA
0 (None - Solid)	None	None. Adequate 18-30vac power is present.
1	High Pressure Sensor #1	Refrigerant discharge pressure has exceeded 600 psig.
2	Low Pressure Sensor #1	Refrigerant suction pressure has fallen below 40 psig.
3	High Pressure Sensor #2	Refrigerant discharge pressure has exceeded 600 psig.
4	Low Pressure Sensor #2	Refrigerant suction pressure has fallen below 40 psig.
5	Freeze Sensor #1 Water Coil Freeze Condition	Refrigerant temperature to the water coil has fallen below 25°F for 30 seconds.
6	Condensate Overflow	Condensate levels in the unit drain pan are too high.
7	Brownout	Control voltage has fallen below 18vac.
8	Freeze Sensor #2 Air Coil Freeze Condition	Refrigerant temperature to the air coil has fallen below 25°F for 30 seconds.
9	Freeze Sensor #3 Water Coil Freeze Condition	Refrigerant temperature to the water coil has fallen below 25°F for 30 seconds.
10	Freeze Sensor #4 Water Coil Freeze Condition	Refrigerant temperature to the water coil has fallen below 25°F for 30 seconds.
11	Refrigerant Leak Fault	Refrigerant LFL% is more than 15%.
12	UPM Board Connection Loss	Lost communication with second stage UPM board.

NOTE: Each 50HQP/50VQP unit comes with two UPM boards dedicated to each refrigerant circuit. It's important to note that the blink codes on the UPM boards will not synchronize. Therefore, the blinks must be counted separately on each UPM board.

Fig. 57 — UPM Settings DIP Switch (SW1)

WATER SIDE ECONOMIZER OPTION

Units without factory provided DDC controller (SCU Open or TruVu™) will include an aquastat for economizer control. The aquastat can be adjusted between –30°F and 100°F. When the water loop temperature is below the aquastat set point, the economizer is enabled. The recommended aquastat set point is 55°F. See Fig. 58.

BOILERLESS HEAT CONTROL

Units without factory provided DDC controller (SCU Open or TruVu™) include an aquastat for boilerless heat control. The aquastat can be adjusted between –30°F and 100°F. When the water loop temperature is below the aquastat set point, the heat pump heating is disabled and a field provided auxiliary heat can be enabled. The recommended aquastat set point is 55°F. See Fig. 58.

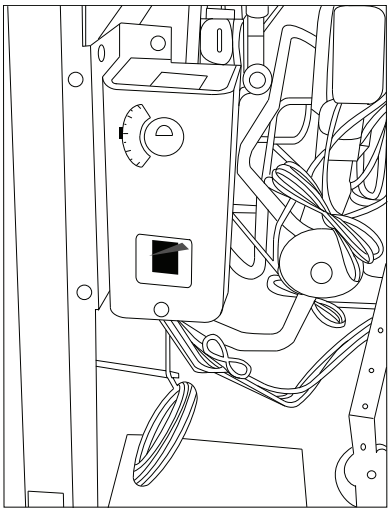

Fig. 58 — Aquastat for Waterside Economizer and Boilerless Control

VFD Field Programming (50HQP Only)

When horizontal units are ordered with either the single speed VFD option or two speed SAV VFD option the VFD will need to be programmed in the field. See Table 13 for the factory default VFD programming parameters for both options.

Table 13 — Two Speed SAV VFD Programming Parameters[a]

GROUP NUMBER	PARAMETER NUMBER	DESCRIPTION	VALUE
10	10.24	RO1 Source	Damper Control
	10.27	RO2 Source	Running
	10.30	RO3 Source	Fault (-1)
12	12.16	AI1 Filter Time	0.100 s
	12.17	AI1 Min	0 V
	12.18	AI1 Max	10 V
	12.19	AI1 Scaled at AI1 Min	0.000
	12.20	AI1 Scaled at AI1 Max	60.000
	12.27	AI2 Min	4.000 mA
	12.28	AI2 Max	20.000 mA
	12.26	AI-2 Filter Time	0.100 s
	12.30	AI2 Scaled at AI2 Max	50.000
20	20.01	Ext1 Commands	In1 Start
	20.06	Ext2 Commands	Not selected
	20.21	Direction	Forward
	20.40	Run Permissive	DI1
	20.41	Start Interlock 1	DI4
	20.42	Start Interlock 2	Not used
21	21.19	Scalar Start Mode	Automatic
	21.03	Stop Mode	Coast
23	28.72	Freq Acceleration Time 1	30.000 s
	28.73	Freq Deceleration Time 1	30.000 s

Table 13 — Two Speed SAV VFD Programming Parameters[a] (cont)

GROUP NUMBER	PARAMETER NUMBER	DESCRIPTION	VALUE
28	28.11	Ext1 Frequency Ref1	AI1 scaled
	28.15	Ext2 Frequency Ref1	Zero
	28.21	Constant Frequency Function	Bit 0 = 1 Packed
	28.22	Constant Frequency Sel1	DI1
	28.23	Constant Frequency Sel2	DI2
	28.24	Constant Frequency Sel3	DI3
	28.26	Constant Frequency 1	60.00 Hz
	28.27	Constant Frequency 2	0.00 Hz
	28.28	Constant Frequency 3	60.00 Hz
	28.29	Constant Frequency 4	0.00 Hz
	28.30	Constant Frequency 5	40.00 Hz
	28.31	Constant Frequency 6	0.00 Hz
	28.32	Constant Frequency 7	60.00 Hz
30	30.11	Minimum Speed	0.00 rpm
	30.12	Maximum Speed	1800 rpm
	30.13	Minimum Frequency	0.00 Hz
	30.14	Maximum Frequency	60.00 Hz
31	31.24	Stall Function	No action
	31.27	Stall Frequency Limit	18 Hz
	31.28	Stall Time	20 s
	31.20	Earth Fault	Fault
	31.14	Number of Trials	0
	31.15	Total Trials Time	30.0 s
	31.16	Delay Time	0.0 s
	31.12	Autoreset Selection (overcurrent)	Bit 0
	31.12	Autoreset Selection (overvoltage)	Bit 1
	31.12	Autoreset Selection (undervoltage)	Bit 2
	31.12	Autoreset Selection (AI supervision fault)	Bit 3
	31.12	Autoreset Selection (External fault 1)	Bit 11
35	35.55	Motor Thermal Time Constant	256 s
	35.51	Motor Load Curve	110%
	35.52	Zero Speed Load	70%
	35.53	Break Point	45 Hz
40	40.32	Set 1 Gain	1.0
	40.33	Set 1 Integration Time	10.0 s
	40.31	Set1 Deviation Inversion	Not inverted (Ref – Fbk)
	40.79	Set 1 Units	User Text
	40.16	Set 1 Setpoint 1 Source	Internal Setpoint
	40.21	Set 1 Internal Setpoint 1	0.00 PID Unit 1
	40.26	Set 1 Setpoint Min	0.00 PID Unit 1
	40.27	Set 1 Setpoint Max	200000.00 PID Unit 1
	40.57	PID1 Set1/Set2 Selection	PID Set 1
58	58.01	Protocol Enable	None[b]
97	97.20	U/F Ratio	Squared
	97.01	Switching Frequency Reference	4 kHz
	97.02	Minimum Switching Frequency	2 kHz
99	96.04	Macro Select	HVAC default
	99.04	Motor Control Mode	Scalar
	99.07	Motor Nominal Voltage	Refer to Motor Nameplate[c]
	99.06	Motor Nominal Current	Refer to Motor Nameplate[c]
	99.08	Motor Nominal Frequency	Refer to Motor Nameplate[c]
	99.09	Motor Nominal Speed	Refer to Motor Nameplate[c]
	99.10	Motor Nominal Power	Refer to Motor Nameplate[c]

NOTE(S):

a. To be adjusted in the field according to the static pressure requirements.
b. Change to BACnet MSTP if drive integration is required.
c. Refer to Motor name plate.

VARIABLE FREQUENCY DRIVE PARAMETERS
(VAV UNITS)

Refer to Table 14 for parameter specifics.

Table 14 — Variable Frequency Drive Parameters (VAV Units)

ABB ACH 580 VFD — Factory Default Setting			
GROUP NUMBER	**PARAMETER NUMBER**	**DESCRIPTION**	**VALUE**
10	10.24	RO1 Source	Damper Control
	10.27	RO2 Source	Running
	10.30	RO3 Source	Fault (-1)
12	12.19	AI1 Scaled at AI1 Min	0.000
	12.20	AI1 Scaled at AI1 Max	60.000
	12.17	AI1 Min	0.000 V
	12.18	AI1 Max	10.000 V
	12.27	AI2 Min	4.000 mA
	12.28	AI2 Max	20.000 mA
	12.26	AI-2 Filter Time	0.100 s
	12.30	AI2 Scaled at AI2 Max	50.000
13	13.22	AO2 Source	Motor Current
	13.27	AO2 Source Min	0.0
	13.28	AO2 Source Max	30000.0
	13.29	AO2 out at AO2 SRC Min	4.000 mA
	13.30	AO2 out at AO2 SRC Max	20.000 mA
	13.26	AO2 Filter Time	0.100 s
20	20.01	Ext1 Commands	In1Start
	20.03	Ext1 in1 Source	DI1
	20.21	Direction	Forward
	20.40	Run Permissive	DI1
	20.41	Start Interlock 1	DI4
	20.42	Start Interlock 2	Not Used
21	21.01	Start Mode	Automatic
	21.03	Stop Mode	Coast
28	28.11	Ext1 Frequency Ref1	AI1 Scaled
	28.15	Ext2 Frequency Ref1	Zero
	28.22	Constant Frequency Sel1	DI3
	28.26	Constant Frequency 1	6.00 Hz
	28.72	Freq Acceleration Time 1	30.000 s
	28.73	Freq Deceleration Time1	30.000 s
30	30.11	Minimum Speed	0.00 rpm
	30.17	Maximum Current	0.00 A
	30.13	Minimum Frequency	0.00 Hz
	30.14	Maximum Frequency	60.00 Hz
31	31.24	Stall Function	No action
	31.27	Stall Frequency Limit	18.00 Hz
	31.28	Stall Time	20 s
	31.20	External Event (1 type)	Fault
	31.14	Number of Trials	0
	31.15	Total Trials Time	30.0 s
	31.16	Delay time	0.0 s
	31.12	Autoreset Section (overcurrent)	Bit 0
	31.12	Autoreset Selection (overvoltage)	Bit 1
	31.12	Autoreset Selection (undervoltage)	But 2
	31.12	Autoreset Selection (AI supervision fault)	Bit 3
	31.12	Autoreset Selection (external fault 1)	Bit 11
35	35.55	Motor Thermal Time Constant	256 s
	35.51	Motor Load Curve	110%
	35.52	Zero Speed Load	70%
	35.53	Break Point	45.00 Hz

Table 14 — Variable Frequency Drive Parameters (VAV Units) (cont)

ABB ACH 580 VFD — Factory Default Setting			
GROUP NUMBER	PARAMETER NUMBER	DESCRIPTION	VALUE
40	40.32	Set 1 Gain	1.00
	40.33	Set 1 Integration Time	10.0 s
	40.31	Set 1 Deviation Inversion	Not Inverted (Ref —Fbk)
	40.79	Set 1 Units	User Text
	40.16	Set 1 Setpoint 1 Source	Internal Setpoint
	40.26	Set 1 Setpoint Min	0.0 PID Unit 1
	40.27	Set1 Setpoint Max	200000.00 PID Unit 1
	40.57	PID1 Set1/Set2 Selection	PID Set1
97	97.20	U/F Ratio	Squared
	97.01	Switching Frequency Mode	4 kHz
	97.02	Minimum Switching Frequency	2 kHz
99	96.04	Macro Select	Done
	96.05	Macro Active	HVAC Default
	99.04	Motor Control Mode	Scalar
	99.07	Motor Nominal Voltage	Refer to Motor Nameplate
	99.06	Motor Nominal Current	Refer to Motor Nameplate
	99.09	Motor Nominal Speed	Refer to Motor Nameplate
	99.01	Motor Nominal Power	Refer to Motor Nameplate

PRE-START-UP

System Checkout

After completing the installation, and before energizing the unit, the following system checks should be made prior to initial start-up:

1. Verify the supply voltage to the heat pump is in accordance with the nameplate ratings.
2. Verify the control transformer is set to the correct voltage for 208/230-v units (factory setting is 230-v).
3. Make sure all electrical connections are tight and secure.
4. Check the electrical fusing/breaker and wiring for the correct size.
5. Verify that the low voltage wiring between the thermostat or DDC controls and the unit is correct.
6. Verify the water piping is complete and correct.
7. Verify there are no leaks in the external piping or in the internal unit piping. Correct as necessary.
8. Verify the isolation or flow control valves are open and that any automatic flow control valve or balancing valve are set to the correct setting.
9. Check the water flow is correct and adjust if necessary.
10. Check the blower for free rotation, and that it is secured to the shaft.
11. Verify the shipping supports have been removed.
12. Vertical Units Only - Verify vibration isolation has been provided and that the unit has been installed on a solid structure.
13. Horizontal Units Only - Verify integral angle iron frames (quantity 2) are installed, and the unit is secured to an adequate support structure. Frames are pre-installed and welded to the cabinet.
14. Verify the unit has proper service clearance. Be certain that all access panels are secured in place.
15. Verify the ductwork has been properly fastened to supply and return duct collars and a pair of pants duct connection for all dual blower configurations is in place.
16. Verify the ductwork is free from obstruction and that all dampers or registers are open.
17. Make sure return air filters are positioned correctly in the filter rack if removed during installation.
18. Verify the unit is not in TEST mode.
19. Verify all control components have been properly configured and all control components have been wired.
20. For units with TruVu™, verify the space temperature input is provided via ZS sensor, non-communication zone sensor (10K thermistor), or over the network and a commissioning interface is available.
21. Verify the unused drain connection (50HQP Only) is capped and sealed.
22. For units with SCU Open controller, verify supply air temperature sensor and duct static pressure sensor have been installed and a commissioning interface is available.

CLEAN AIR COIL

To obtain maximum performance, the air coil should be cleaned before starting the unit. A 10% solution of dishwasher detergent and water is recommended for both sides of the coil. Rinse thoroughly with water.

Blower Drive Assembly

Units are equipped with a belt driven blower drive assembly consisting of the drive motor, variable pitch motor sheave, belt, blower sheave and blower.

NOTE: Consult Application Engineering for drive package details.

Fan Sheaves

Factory-supplied drives are pre-aligned and tensioned; however, it is recommended the belt tension and alignment be checked before starting the unit. Always check the drive alignment after adjusting belt tension.

To install sheaves on the fan or motor shaft:

1. Isolate power to the unit.
2. Remove side unit access panel(s).
3. Remove any rust-preventive coating on the fan shaft.
4. Make sure the shaft is clean and free of burrs. Add grease or lubricant to bore of sheave before installing.
5. Mount sheave on the shaft; to prevent bearing damage, do not use excessive force.

Each factory-assembled fan, shaft, and drive sheave assembly is precision aligned and balanced. If excessive unit vibration occurs after field replacement of sheaves, the unit should be rebalanced.

To change the drive ratio, follow the steps in the Evaporator Fan Performance Adjustment section (page 63).

After 1 to 3 minutes of operation, check the belt tension. Also check tension frequently during the first 24 hours of operation and adjust if necessary. Periodically check belt tension throughout the run-in period, which is normally the initial 72 hours of operation.

ALIGNMENT

Make sure that fan shafts and motor shafts are parallel and level. The most common causes of misalignment are nonparallel shafts and improperly located sheaves. Where shafts are not parallel, belts on one side are drawn tighter and pull more than their share of the load. As a result, these belts wear out faster, requiring the entire set to be replaced before it has given maximum service. If misalignment is in the sheave, belts enter and leave the grooves at an angle, causing excessive belt and sheave wear.

Shaft Alignment

Check shaft alignment by measuring the distance between the shafts at 3 or more locations. If the distances are equal, then the shafts are parallel.

Sheave Alignment

1. To check the location of the fixed sheaves on the shafts, use a straightedge or a piece of string. If the sheaves are properly aligned, the string will touch them at the points indicated by the arrows in Fig. 59. Rotate each sheave a half revolution to determine whether the sheave is wobbly or the drive shaft is bent. Correct any misalignment.
2. With sheaves aligned, tighten cap screws evenly and progressively.
   NOTE: There should be a 1/8-in. to 1/4-in. gap between the mating part hub and the bushing flange. If the gap is closed, the bushing is probably the wrong size.
3. With taper-lock bushed hubs, be sure the bushing bolts are tightened evenly to prevent side-to-side pulley wobble. Check by rotating sheaves and rechecking sheave alignment. When substituting field-supplied sheaves for factory-supplied sheaves, only the motor sheave should be changed.

Evaporator Fan Performance Adjustment (no VFD units only)

The motor pulleys used on 50HQP/50VQP units have a variable pitch. This means that the fan speed can be adjusted depending on the pitch diameter setting. To change fan speeds from factory settings:

1. Shut off unit power supply.
2. Loosen nuts on the 4 carriage bolts in the mounting base. Using adjusting bolts and plate, slide the motor and remove the belt.
3. Loosen adjustable pulley flange setscrew.
4. Open the variable pitch pulley to decrease fan speed and close it to increase fan speed.. Increasing the fan speed increases the load on the motor.
5. Replace and tighten the belts (see Belt Tension Adjustment section).
6. Restore power to the unit.

To align fan and motor pulleys:

1. Loosen fan pulley setscrews.
2. Slide fan pulley along fan shaft.
3. Make angular alignment by loosening motor from mounting plate.
4. Restore power to unit.

Fig. 59 — Sheave Alignment

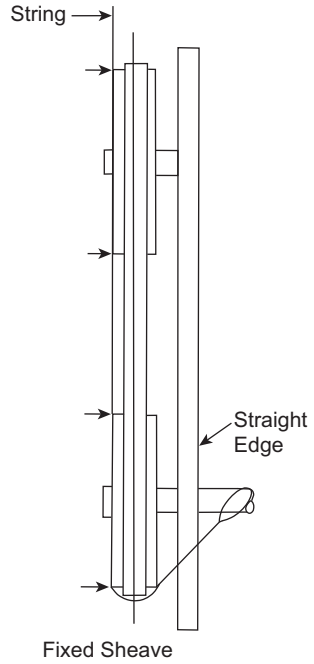

BELT TENSION ADJUSTMENT

Using a gauge, apply 4 lb of force to the center of the belt and adjust the tension until a deflection of 1/64-in. is achieved for every inch of shaft center distance. See Fig. 60.

Ideal belt tension is the lowest value under which belt slip will not occur at peak load conditions.

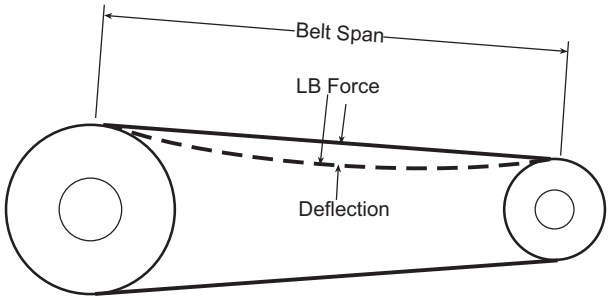

Fig. 60 — Fan Belt Tension

System Flushing and Filling

Once the piping is complete, units require final purging and loop charging. A flush cart pump of at least 1.5 hp is needed to achieve adequate flow velocity in the loop to purge air and dirt particles from the loop. Flush the loop in both directions with a high volume of water at a high velocity. Follow the steps below to properly flush the loop:

1. Verify power is off.
2. Fill loop with water from hose through flush cart before using flush cart pump to ensure an even fill. Do not allow the water level in the flush cart tank to drop below the pump inlet line to prevent air from filling the line.
3. Maintain a fluid level in the tank above the return tee to avoid air entering back into the fluid.
4. Shutting off the return valve that connects into the flush cart reservoir will allow 50 psig surges to help purge air pockets. This maintains the pump at 50 psig.
5. To purge, keep the pump at 50 psig until maximum pumping pressure is reached.

6. Open the return valve to send a pressure surge through the loop to purge any air pockets in the piping system.
7. A noticeable drop in fluid level will be seen in the flush cart tank. This is the only indication of air in the loop.

   NOTE: If air is purged from the system while using a 10 in. PVC flush tank, the level drop will only be 1 to 2 in. since liquids are incompressible. If the level drops more than this, flushing should continue since air is still being compressed in the loop. If level is less than 1 to 2 in., reverse the flow.
8. Repeat this procedure until all air is purged.
9. Restore power.

Antifreeze may be added before, during or after the flushing process. However, depending on when it is added in the process, it can be wasted. Refer to the System Flow, Antifreeze section on page 65 for more detail.

Loop static pressure will fluctuate with the seasons. Pressures will be higher in the winter months than during the warmer months. This fluctuation is normal and should be considered when charging the system initially. Run the unit in either heating or cooling for several minutes to condition the loop to a homogeneous temperature.

When complete, perform a final flush and pressurize the loop to a static pressure of 40 to 50 psig for winter months or 15 to 20 psig for summer months.

After pressurization, be sure to remove the plug from the end of the loop pump motor(s) to allow trapped air to be discharged and to ensure the motor housing has been flooded. Be sure the loop flow center provides adequate flow through the unit by checking pressure drop across the heat exchanger. Compare the results to the data in Fig. 61.

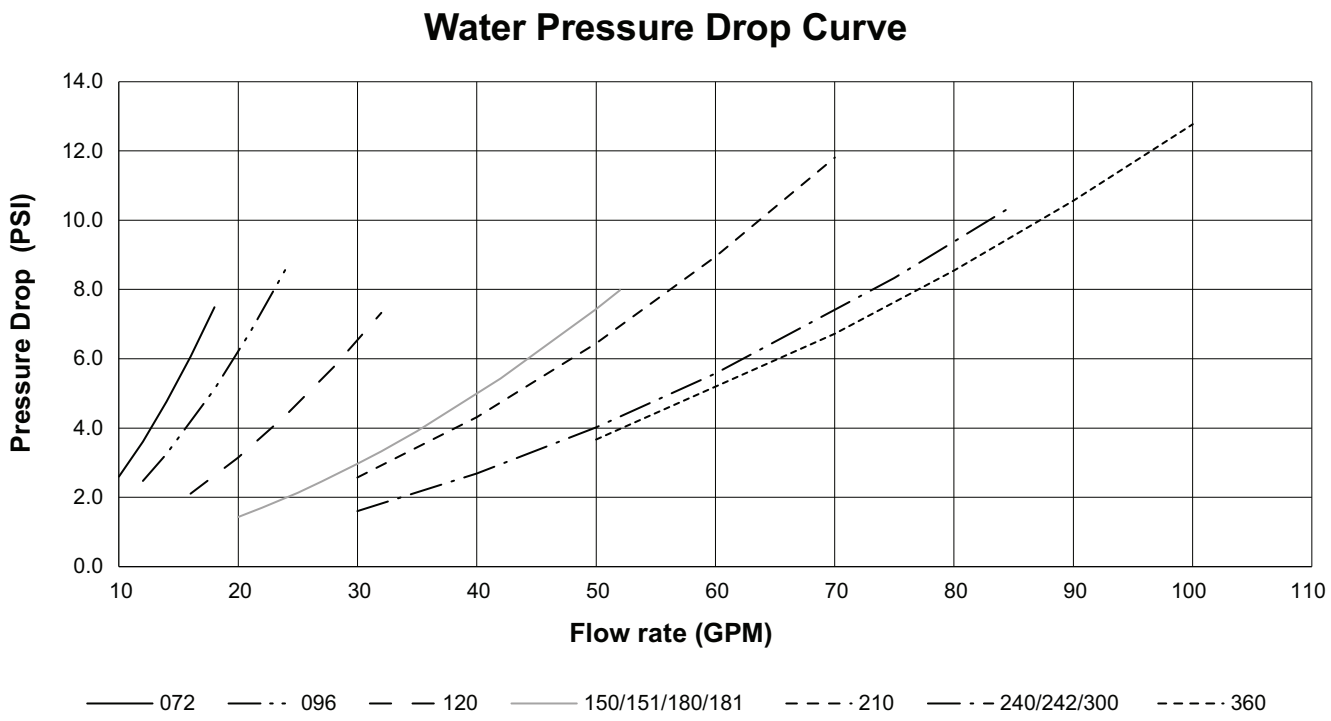

Fig. 61 — Water Pressure Drop Curve

System Flow

FLOW VERIFICATION

The WSHP units do not include a factory flow switch as standard. It is recommended to field install a flow switch or special order a flow switch as factory installed to prevent the compressor from operating without loop flow.

IMPORTANT: It is recommended to have a flow switch to prevent the unit from running if water flow is lost.

FLOW REGULATION

Flow regulation can be accomplished by two methods. Most water control valves have a flow adjustment built into the valve. By measuring the pressure drop through the unit heat exchanger, the flow rate can be determined. Adjust the water control valve until the desired flow rate is achieved. Since the pressure constantly varies, 2 pressure gauges may be needed in some applications. See Fig. 61 for flow rates based on waterside pressure drop.

An alternate method of flow regulation is to install an automatic flow control valve. These valves feature a removable cartridge that controls the maximum flow through the valve assembly. Verify that the water flow control cartridge matches the application low requirement.

ANTIFREEZE

In applications where leaving water temperatures drop below 40°F or where piping will be routed through areas subject to freezing, antifreeze is needed.

Alcohols and glycols are commonly used as antifreeze agents. Freeze protection should be maintained to 15°F below the lowest expected entering loop temperature. For example, if the lowest expected entering loop temperature is 30°F, the leaving loop temperature would be 22°F to 25°F. Therefore, the freeze protection should be at 15°F (30°F - 15°F = 15°F).

NOTE: All alcohols should be pre-mixed and pumped from a reservoir outside of the building or introduced under water level to prevent fuming.

Calculate the total volume of fluid in the piping system. (see Table 15). Use the percentage by volume in Table 16 to determine the amount of antifreeze to use. Antifreeze concentration should be checked from a well-mixed sample using a hydrometer to measure specific gravity.

Table 15 — Approximate Fluid Volume (gal.) per 100 ft of Pipe[a]

PIPE	DIAMETER (in.)	VOLUME (gal.)
Copper	1	4.1
	1-1/4	6.4
	1-1/2	9.2
Rubber Hose	1	3.9
Polyethylene	3/4 IPS SDR11	2.8
	1 IPS SDR11	4.5
	1-1/4 IPS SDR11	8.0
	1/2 IPS SDR11	10.9
	2 IPS SDR11	18.0
	1-1/4 IPS SCH40	8.3
	1-1/2 IPS SCH40	10.9
	2 IPS SCH40	17.0

NOTE(S):

a. Volume of heat exchanger is approximately 1.0 gallon.

LEGEND

IPS — Internal Pipe Size
SCH — Schedule
SDR — Standard Dimensional Ratio

Table 16 — Antifreeze Percentages by Volume

ANTIFREEZE	MINIMUM TEMPERATURE FOR FREEZE PROTECTION (°F)			
	10	15	20	25
Methanol (%)	25	21	16	10
100% USP Food Grade Propylene Glycol (%)	38	30	22	15
Ethanol (%)	29	25	20	14

FREEZE PROTECTION SELECTION

The 15°F FP1 factory setting (water) should be used to avoid freeze damage to the unit.

Once antifreeze is selected, refer to Step 10 — Configure Unit Control Components on page 56 of this manual for FREEZE Protection settings on the UPM board.

START-UP

Use the procedure outlined below to initiate proper unit start-up.

NOTE: This equipment is designed for indoor installation only.

Operating Limits

ENVIRONMENT

This equipment is designed for indoor installation ONLY. Extreme variations in temperature, humidity and corrosive water or air will adversely affect the unit performance, reliability and service life.

NOTE: Two factors determine the operating limits of a unit: entering-air temperature and water temperature. Whenever any of these factors are at a minimum or maximum level, the other factor must be at a normal level to ensure proper unit operation. See Table 18.

POWER SUPPLY

A voltage variation of ± 10% of nameplate utilization voltage is acceptable.

UNIT STARTING CONDITIONS

Depending on the model, units should start and operate with entering water temperature temperatures between 20 and 110°F and entering air temperatures between 45 and 95°F. Water flow rates should be between 1.5 and 3.0 gpm/nominal cooling ton.

NOTE: These operating limits are not normal or continuous operating conditions. Assume that such a start-up is for the purpose of bringing the building space up to occupancy temperature. See Table 17 for operating limits.

Table 17 — WSHP Operating Limits[a]

FLUID TYPE	LIMIT		COOLING	HEATING
Air	Minimum Ambient (°F)		50	40
	Maximum Ambient (°F)		100	85
	Rated Ambient (°F)		80	68
	Minimum Entering (°F db/wb)		65/57	45
	Maximum Entering (°F db/wb)		95/85	80
	Rated Entering (°F)		80/67	68/57
Liquid	Minimum Entering (°F)		45	20
	Max Entering (°F)		110	80
	Rated Entering (°F)	Water Loop	86	68
		Ground Loop	77	32
		Ground Water	59	50
	Anti-Freeze Requirement (LWT / EWT °F)		<40 / <50	
	Maximum Operating Water Pressure (psi/kPa)		400 psi/2,758 kPa (Standard unit)	
	Minimum Operating Flow Rate (gpm/ton)		1.5	

NOTE(S):

a. Units with waterside economizer options can operate with EWT <45°F, the LWT from WSE should be within the stated above conditions.

LEGEND

db — Dry Bulb
wb — Wet Bulb
EWT — Entering Water Temperature
LWT — Leaving Water Temperature

START UP PROCEDURE

⚠ WARNING

When the disconnect switch is closed, high voltage is present in some areas of the electrical panel. Exercise caution when working with the energized equipment. Failure to heed this warning could lead to personal injury.

1. Restore power to system.
2. Turn thermostat blower position to ON or use the DDC (direct digital control) interface to enable the unit blower. The blower should start.
3. Balance airflow at diffusers/dampers.
4. Adjust all water valves to the full open position.
5. Use the thermostat or DDC control to enable the compressor by placing the unit in cooling mode.
6. Verify compressor operation. If scroll compressor, verify compressor rotation direction.

SCROLL COMPRESSOR ROTATION

It is important to be certain compressor is rotating in the proper direction. To determine whether or not compressor is rotating in the proper direction:

1. Connect service gauges to suction and discharge pressure fittings.
2. Energize the compressor by using the thermostat or DDC control to put the unit in cooling mode.
3. The suction pressure should drop and the discharge pressure should rise, as is normal on any start-up.

If the suction pressure does not drop and the discharge pressure does not rise to normal levels:

1. Turn off power to the unit. Install disconnect tag.
2. Reverse any two of the unit power leads.
3. Reapply power to the unit and verify pressures are correct. The suction and discharge pressure levels should now move to their normal start-up levels.

When the compressor is rotating in the wrong direction, the unit makes more noise and does not provide cooling.

After a few minutes of reverse operation, the scroll compressor internal overload protection will open, thus activating the unit lockout. This requires a manual reset. To reset the lockout, turn the thermostat on and then off or power cycle the unit power feed.

NOTE: There is a 5-minute time delay before the compressor will restart.

Refer to Table 18 for 50HQP,VQP typical unit operating pressures and temperatures.

Table 18 — 50HQP/VQP — Typical Unit Operating Pressures and Temperatures

UNIT SIZE	ENTERING FLUID TEMP (°F)	WATER FLOW (gpm)	COOLING				HEATING			
			SUCTION PRESSURE (psig)	DISCHARGE PRESSURE (psig)	WATER TEMP RISE (°F)	AIR TEMP DROP (°F)	SUCTION PRESSURE (psig)	DISCHARGE PRESSURE (psig)	WATER TEMP DROP (°F)	AIR TEMP RISE (°F)
072	30	10.0	—	—	—	—	53-68	229-291	7-8	19-22
		16.0	—	—	—	—	56-72	232-297	5-6	21-24
	40	10.0	102-129	162-203	17-21	19-23	62-80	239-305	8-10	22-26
		16.0	101-127	146-183	11-14	19-23	67-86	243-312	5-6	23-27
	50	10.0	103-131	186-235	18-21	19-23	74-95	251-321	9-11	24-28
		16.0	103-129	169-214	11-13	18-23	79-102	256-329	6-8	26-30
	60	10.0	105-133	213-271	17-20	18-22	86-110	264-338	11-13	27-32
		16.0	105-132	195-247	11-13	18-22	93-120	271-348	7-9	29-34
	70	10.0	108-136	243-310	17-21	19-22	100-127	279-357	12-15	31-36
		16.0	107-134	225-285	11-13	19-22	109-139	288-368	8-10	33-38
	80	10.0	109-138	277-352	17-21	18-22	116-147	296-377	14-17	34-39
		16.0	108-136	259-327	11-13	18-22	127-161	307-392	9-11	36-42
	90	10.0	111-140	316-400	17-20	18-21	134-168	314-399	16-19	38-44
		16.0	111-139	297-373	11-13	18-21	147-185	328-416	10-13	40-47
	100	10.0	114-143	359-450	17-20	17-21	—	—	—	—
		16.0	113-141	340-423	10-12	17-21	—	—	—	—
096	30	13.0	—	—	—	—	59-74	257-322	8-9	24-28
		22.0	—	—	—	—	61-78	260-327	5-6	25-29
	40	13.0	98-123	177-212	17-20	20-25	69-88	271-341	10-11	26-31
		22.0	97-121	157-190	10-12	20-25	74-94	276-347	6-7	28-33
	50	13.0	99-125	203-245	17-20	20-25	82-105	286-360	11-13	29-35
		22.0	99-123	181-221	9-12	20-25	88-112	294-369	7-8	31-37
	60	13.0	101-128	230-281	17-20	20-25	96-122	304-382	12-14	33-40
		22.0	97-122	166-214	10-12	20-25	104-132	314-394	8-9	35-42
	70	13.0	99-126	203-262	17-19	20-25	111-141	324-406	13-16	36-44
		22.0	99-125	194-250	10-12	20-25	121-153	337-421	9-10	39-47
	80	13.0	105-132	295-362	16-19	19-23	129-162	346-433	16-18	40-48
		22.0	104-131	274-337	9-11	19-24	142-177	364-452	10-11	43-52
	90	13.0	106-135	334-409	15-18	19-24	148-185	372-463	17-20	44-53
		22.0	106-133	313-385	10-11	19-24	165-204	395-488	11-13	47-57
	100	13.0	108-137	376-459	15-17	19-23	—	—	—	—
		22.0	108-135	357-436	9-11	19-23	—	—	—	—
120	30	16.0	—	—	—	—	56-72	257-316	9-10	21-24
		32.0	—	—	—	—	59-76	261-322	4-5	22-25
	40	16.0	96-122	168-210	19-22	19-23	67-86	271-333	10-11	24-28
		32.0	94-119	147-186	10-11	18-23	72-92	276-340	5-6	25-29
	50	16.0	97-125	192-241	18-21	19-22	72-108	286-351	12-13	27-31
		32.0	96-123	170-216	10-11	19-23	78-116	295-361	6-7	29-33
	60	16.0	98-127	220-276	18-21	18-22	94-118	304-372	13-15	30-35
		32.0	97-125	197-250	9-10	19-23	102-128	315-384	7-8	31-37
	70	16.0	100-130	252-315	18-21	19-22	109-137	324-395	15-17	33-39
		32.0	99-127	228-288	9-11	18-22	121-149	340-413	8-10	35-41
	80	16.0	101-132	288-359	18-21	18-22	126-156	348-422	17-19	37-43
		32.0	101-131	263-330	9-11	18-22	142-173	367-443	9-11	39-46
	90	16.0	103-135	327-407	18-21	18-21	146-178	372-449	19-21	40-47
		32.0	102-133	301-377	9-11	18-22	165-199	396-475	10-12	44-51
	100	16.0	105-138	370-460	18-20	17-21	—	—	—	—
		32.0	105-136	345-429	9-11	17-21	—	—	—	—
150/151	30	22.0	—	—	—	—	52-68	231-286	6-7	18-20
		38.0	—	—	—	—	56-73	235-290	4-5	18-21
	40	22.0	105-132	176-217	15-19	18-22	63-82	241-298	8-9	20-23
		38.0	105-131	161-199	9-11	18-22	68-88	245-304	5-5	21-24
	50	22.0	106-135	202-249	14-18	18-22	68-105	253-313	9-10	23-26
		38.0	106-134	185-229	9-11	18-23	74-112	258-319	5-6	24-28
	60	22.0	107-137	230-284	15-18	18-22	90-115	266-328	10-11	25-29
		38.0	107-136	213-264	8-10	18-22	97-123	273-337	6-7	27-31
	70	22.0	106-137	208-269	15-18	18-22	105-133	281-347	12-13	29-33
		38.0	108-138	244-302	8-10	18-22	115-144	290-357	7-8	30-35
	80	22.0	109-142	297-365	14-17	18-21	123-153	299-367	14-15	32-37
		38.0	109-140	280-345	8-10	17-21	135-167	311-381	8-9	33-39
	90	22.0	111-144	336-413	14-17	17-20	143-176	319-390	15-17	35-40
		38.0	110-142	318-391	9-10	17-21	157-192	334-407	10-11	38-44
	100	22.0	112-146	377-465	14-17	17-20	—	—	—	—
		38.0	112-145	360-442	9-10	16-20	—	—	—	—

Table 18 — 50HQP/VQP — Typical Unit Operating Pressures and Temperatures (cont)

UNIT SIZE	ENTERING FLUID TEMP (°F)	WATER FLOW (gpm)	COOLING				HEATING			
			SUCTION PRESSURE (psig)	DISCHARGE PRESSURE (psig)	WATER TEMP RISE (°F)	AIR TEMP DROP (°F)	SUCTION PRESSURE (psig)	DISCHARGE PRESSURE (psig)	WATER TEMP DROP (°F)	AIR TEMP RISE (°F)
180/181	30	25.0	—	—	—	—	51-65	229-284	6-7	16-19
		45.0	—	—	—	—	55-70	232-289	3-4	17-20
	40	25.0	105-130	181-222	15-19	17-21	61-77	238-296	7-9	18-22
		45.0	104-127	164-202	8-10	17-22	66-83	243-303	4-5	19-24
	50	25.0	106-132	206-253	14-18	17-21	67-98	249-310	8-10	21-25
		45.0	105-130	189-233	8-10	17-21	73-106	255-317	4-6	22-27
	60	25.0	107-134	235-289	14-18	17-21	86-107	262-325	9-11	23-28
		45.0	106-132	216-267	8-10	16-21	94-116	270-335	5-7	25-30
	70	25.0	105-133	211-272	14-18	17-21	101-125	277-343	11-13	26-31
		45.0	107-134	248-306	8-10	17-21	111-136	288-356	6-8	28-34
	80	25.0	109-138	303-371	14-18	16-20	118-144	295-364	12-15	29-35
		45.0	109-137	283-348	8-10	16-20	130-158	308-379	7-9	31-37
	90	25.0	110-140	341-418	14-17	16-19	136-165	314-386	13-16	32-39
		45.0	110-139	322-395	7-10	16-20	152-182	330-404	8-10	35-42
	100	25.0	111-142	383-471	14-18	15-19	—	—	—	—
		45.0	111-141	365-447	8-10	16-20	—	—	—	—
210	30	28.0	—	—	—	—	56-72	236-298	8-9	21-25
		52.0	—	—	—	—	73-90	288-351	1-2	24-28
	40	28.0	95-121	123-166	18-22	19-23	70-88	270-335	9-11	24-28
		52.0	94-119	115-156	10-12	20-24	81-101	287-353	2-3	26-30
	50	28.0	97-125	148-198	17-21	19-23	76-111	304-372	11-13	26-31
		52.0	96-123	139-186	10-12	18-23	82-119	286-356	6-7	28-33
	60	28.0	100-129	172-229	17-21	18-22	97-121	290-361	12-15	30-35
		52.0	99-127	162-216	9-11	18-22	106-131	299-371	7-9	32-37
	70	28.0	103-133	200-264	15-20	18-22	113-140	307-381	13-16	33-39
		52.0	102-131	190-251	9-11	18-22	125-153	320-396	8-10	35-40
	80	28.0	105-136	232-305	15-19	18-21	131-161	326-403	16-19	36-43
		52.0	104-134	220-289	8-11	17-21	146-177	342-422	9-11	38-45
	90	28.0	106-138	267-349	15-19	17-21	151-183	348-428	18-21	39-46
		52.0	106-137	255-332	8-11	17-21	169-203	368-450	10-12	42-49
	100	28.0	108-142	305-398	14-19	17-20	—	—	—	—
		52.0	108-140	293-379	7-10	17-21	—	—	—	—
240/242	30	32.0	—	—	—	—	59-75	301-358	8-10	22-26
		64.0	—	—	—	—	62-78	266-324	4-5	22-27
	40	32.0	100-125	166-204	17-21	18-22	69-87	284-346	10-11	24-28
		64.0	98-122	145-180	9-11	18-22	74-93	273-336	5-6	25-30
	50	32.0	98-124	150-196	17-21	18-22	81-102	282-348	11-12	27-32
		64.0	100-125	169-212	9-11	17-22	88-110	290-358	6-7	28-34
	60	32.0	100-127	176-229	16-20	17-22	96-119	298-369	13-15	30-36
		64.0	100-125	165-215	8-11	18-22	105-130	308-381	7-8	32-38
	70	32.0	102-129	204-265	16-20	18-22	112-139	318-394	14-16	33-39
		64.0	101-127	193-250	8-11	18-22	124-152	332-410	8-9	35-42
	80	32.0	106-134	287-356	17-21	17-21	131-160	341-421	15-18	37-44
		64.0	106-132	263-327	8-10	17-21	145-176	359-442	8-10	40-47
	90	32.0	108-136	327-403	16-20	17-21	152-184	366-452	17-20	40-48
		64.0	107-134	303-374	8-10	17-21	169-203	388-475	9-11	44-52
	100	32.0	110-139	372-456	17-20	16-20	—	—	—	—
		64.0	110-137	347-426	8-10	16-20	—	—	—	—
300	30	45.0	—	—	—	—	55-71	263-320	7-9	22-26
		75.0	—	—	—	—	57-73	266-324	4-5	22-27
	40	45.0	89-115	124-170	15-19	18-23	66-84	277-339	9-10	25-29
		75.0	89-114	119-162	10-13	18-23	69-88	281-344	5-6	25-30
	50	45.0	92-119	148-202	15-18	17-22	79-100	294-360	10-11	28-33
		75.0	91-117	142-192	9-12	17-22	83-105	299-367	6-7	28-34
	60	45.0	95-122	173-234	15-18	18-22	95-118	314-385	11-13	30-36
		75.0	94-121	166-223	9-11	18-22	99-124	320-393	7-8	32-38
	70	45.0	96-124	200-269	15-18	17-22	111-138	337-413	13-15	34-40
		75.0	96-123	193-257	8-11	17-22	117-145	345-423	8-9	35-42
	80	45.0	98-126	232-308	14-17	17-21	131-160	362-442	14-17	38-45
		75.0	98-126	224-295	9-11	17-22	138-169	370-453	8-10	39-46
	90	45.0	100-129	267-350	14-17	17-21	154-186	390-476	15-18	42-50
		75.0	100-128	258-336	8-10	17-21	161-195	400-487	9-11	43-51
	100	45.0	102-132	307-398	13-16	16-20	—	—	—	—
		75.0	102-131	297-382	8-10	16-20	—	—	—	—

Table 18 — 50HQP/VQP — Typical Unit Operating Pressures and Temperatures (cont)

UNIT SIZE	ENTERING FLUID TEMP (°F)	WATER FLOW (gpm)	COOLING				HEATING			
			SUCTION PRESSURE (psig)	DISCHARGE PRESSURE (psig)	WATER TEMP RISE (°F)	AIR TEMP DROP (°F)	SUCTION PRESSURE (psig)	DISCHARGE PRESSURE (psig)	WATER TEMP DROP (°F)	AIR TEMP RISE (°F)
360	30	50	—	—	—	—	44-59	266-328	7-8	19-22
		90	—	—	—	—	50-66	269-334	4-5	20-23
	40	50	90-117	192-233	18-22	18-22	53-71	272-338	8-10	20-24
		90	89-115	176-213	10-13	18-22	61-80	282-351	5-6	22-26
	50	50	91-119	214-263	19-22	17-21	63-84	286-356	9-11	23-27
		90	91-117	197-242	10-12	17-22	72-95	298-371	6-8	25-29
	60	50	93-121	240-298	19-22	17-21	74-98	300-374	11-13	25-30
		90	92-119	223-275	10-12	17-21	85-112	316-393	6-8	28-33
	70	50	95-123	270-337	18-22	17-20	86-113	317-395	12-15	28-33
		90	94-121	251-311	10-12	17-20	100-130	337-417	7-9	31-36
	80	50	96-125	303-378	18-22	16-20	100-131	336-417	14-17	31-36
		90	96-124	284-352	10-12	17-21	117-151	361-446	8-10	34-40
	90	50	98-127	341-425	18-21	17-20	115-149	358-443	15-18	34-40
		90	98-126	322-398	10-12	17-20	135-173	389-477	9-12	37-44
	100	50	101-130	383-474	18-21	16-20	—	—	—	—
		90	100-128	364-447	10-12	16-20	—	—	—	—

Blower Performance

See tables 19-31 for blower performance information.

Table 19 — 50HQP072/50VQP072 Blower Performance

CFM	AVAILABLE EXTERNAL STATIC PRESSURE (in. wg wet coil and standard filter 1" MERV 5)															
	0.2		0.4		0.6		0.8		1.0		1.2		1.4		1.6	
	rpm	bhp	rpm	bhp	rpm	bhp	rpm	bhp	rpm	bhp	rpm	bhp	rpm	bhp	rpm	bhp
2000	*606*	*0.35*	693	0.43	774	0.52	850	0.62	—	—	—	—	—	—	—	—
2500	706	0.61	780	0.72	850	0.82	916	*0.93*	*979*	*1.04*	*1040*	*1.16*	*1098*	*1.28*	—	—
3000	814	1.00	*877*	*1.12*	*938*	*1.24*	996	*1.37*	*1053*	*1.5*	*1107*	*1.63*	*1160*	*1.76*	*1211*	*1.9*
3500	*923*	*1.52*	*979*	*1.66*	*1033*	*1.8*	1085	*1.94*	*1135*	*2.09*	*1184*	*2.24*	*1232*	*2.39*	*1279*	*2.54*
4000	*1033*	*2.2*	*1083*	*2.36*	*1131*	*2.52*	1178	*2.68*	—	—	—	—	—	—	—	—

Table 20 — 50HQP096/50VQP096 Blower Performance

CFM	AVAILABLE EXTERNAL STATIC PRESSURE (in. wg wet coil and standard filter 1" MERV 5)															
	0.2		0.4		0.6		0.8		1.0		1.2		1.4		1.6	
	rpm	bhp	rpm	bhp	rpm	bhp	rpm	bhp	rpm	bhp	rpm	bhp	rpm	bhp	rpm	bhp
2000	—	—	685	0.43	766	0.51	843	0.61	915	0.71	—	—	—	—	—	—
2500	*695*	0.60	769	0.7	839	0.81	906	0.91	970	1.03	1031	1.14	*1090*	*1.27*	—	—
3000	801	0.97	865	1.09	926	1.22	985	1.34	1042	1.47	*1096*	*1.60*	*1149*	*1.74*	*1201*	*1.88*
3500	906	1.48	962	1.62	1017	1.76	*1069*	*1.90*	*1120*	*2.05*	*1170*	*2.19*	*1218*	*2.34*	*1265*	*2.5*
4000	1016	2.14	*1066*	*2.30*	*1115*	*2.46*	*1162*	*2.62*	*1208*	*2.79*	*1253*	*2.95*	—	—	—	—
4500	*1124*	*2.98*	—	—	—	—	—	—	—	—	—	—	—	—	—	—
5000	—	—	—	—	—	—	—	—	—	—	—	—	—	—	—	—

Table 21 — 50VQP120 Blower Performance

CFM	AVAILABLE EXTERNAL STATIC PRESSURE (in. wg wet coil and standard filter 1" MERV 5)															
	0.2		0.4		0.6		0.8		1.0		1.2		1.4		1.6	
	rpm	bhp	rpm	bhp	rpm	bhp	rpm	bhp	rpm	bhp	rpm	bhp	rpm	bhp	rpm	bhp
2500	—	—	—	—	625	0.58	692	0.70	—	—	—	—	—	—	—	—
3000	—	—	—	—	661	0.80	723	0.94	780	1.08	**835**	**1.22**	—	—	—	—
3500	—	—	650	0.97	709	1.11	765	1.26	**818**	**1.41**	**869**	**1.57**	**918**	**1.74**	**965**	**1.90**
4000	648	1.16	704	1.32	758	1.49	**809**	**1.65**	**858**	**1.82**	**905**	**1.99**	**951**	**2.17**	**995**	**2.35**
4500	709	1.59	760	1.77	**810**	**1.95**	**857**	**2.13**	**902**	**2.32**	**946**	**2.51**	**989**	**2.70**	**1031**	**2.90**
5000	774	2.12	**821**	**2.32**	**866**	**2.52**	**909**	**2.72**	**952**	**2.92**	**993**	**3.13**	**1033**	**3.34**	**1072**	**3.55**
5500	**836**	**2.75**	**880**	**2.97**	**921**	**3.19**	**962**	**3.41**	**1002**	**3.63**	**1040**	**3.85**	**1078**	**4.08**	**1115**	**4.31**

Table 22 — 50HQP120 Blower Performance

CFM	AVAILABLE EXTERNAL STATIC PRESSURE (in. wg wet coil and standard filter 1" MERV 5)															
	0.2		0.4		0.6		0.8		1.0		1.2		1.4		1.6	
	rpm	bhp	rpm	bhp	rpm	bhp	rpm	bhp	rpm	bhp	rpm	bhp	rpm	bhp	rpm	bhp
2500	—	—	679	0.48	770	0.61	**854**	**0.75**	—	—	—	—	—	—	—	—
3000	639	0.54	729	0.68	**811**	**0.82**	**889**	**0.97**	**962**	**1.13**	**1031**	**1.3**	**1097**	**1.48**	—	—
3500	713	0.80	**793**	**0.95**	**867**	**1.11**	**938**	**1.28**	**1005**	**1.46**	**1069**	**1.64**	**1131**	**1.83**	*1191*	*2.03*
4000	784	1.12	**856**	**1.29**	**924**	**1.47**	**989**	**1.66**	**1052**	**1.85**	**1111**	**2.05**	**1169**	**2.25**	*1225*	*2.46*
4500	**857**	**1.51**	**923**	**1.71**	**985**	**1.91**	**1045**	**2.11**	**1103**	**2.32**	**1159**	**2.54**	*1213*	*2.76*	*1266*	*2.98*
5000	**934**	**2.01**	**994**	**2.23**	**1052**	**2.45**	**1107**	**2.67**	**1161**	**2.90**	*1213*	*3.13*	*1264*	*3.37*	*1314*	*3.61*
5500	**1009**	**2.60**	**1064**	**2.84**	**1118**	**3.08**	**1169**	**3.32**	*1220*	*3.56*	*1269*	*3.81*	*1317*	*4.07*	*1363*	*4.33*

NOTE: Blower performance tables are based on Wet Coil and Standard Filter (1" MERV 5).

LEGEND

	—	Do not operate in shaded area.
Italics/underline	—	values indicates outside of standard drive package rpm range. Reach out application group for alternative drive package (ETO).
Bold	—	indicates 5 hp motor selection is required.
bhp	—	Brake horse power (bhp) values are per unit. Refer to the physical data table for quantity of blowers and motors.

Table 23 — 50HQP150 Blower Performance

CFM	AVAILABLE EXTERNAL STATIC PRESSURE (in. wg wet coil and standard filter 1" MERV 5)															
	0.2		0.4		0.6		0.8		1.0		1.2		1.4		1.6	
	rpm	bhp	rpm	bhp	rpm	bhp	rpm	bhp	rpm	bhp	rpm	bhp	rpm	bhp	rpm	bhp
3500	—	—	*617*	*0.89*	*677*	*1.03*	735	1.18	789	1.33	841	1.48	891	1.64	939	1.81
4000	*606*	*1.05*	*665*	*1.21*	*721*	*1.37*	773	1.53	824	1.70	872	1.87	919	2.05	964	2.23
4500	*663*	*1.44*	*717*	*1.62*	768	1.80	817	1.98	864	2.16	909	2.35	953	2.54	995	2.73
5000	*722*	*1.92*	771	2.11	818	2.31	864	2.51	907	2.71	950	2.91	991	3.12	1031	3.33
5500	780	2.48	825	2.70	869	2.91	911	3.13	952	3.35	992	3.57	1031	3.79	**1069**	**4.02**
6000	841	3.17	883	3.40	924	3.64	963	3.88	1002	4.11	1039	4.35	**1076**	**4.59**	*1111*	*4.84*
6500	901	3.96	940	4.22	978	4.47	1015	4.73	1051	4.98	1087	5.24	*1121*	*5.5*	*1155*	*5.76*

Table 24 — 50VQP151 Blower Performance

CFM	AVAILABLE EXTERNAL STATIC PRESSURE (in. wg wet coil and standard filter 1" MERV 5)															
	0.2		0.4		0.6		0.8		1.0		1.2		1.4		1.6	
	rpm	bhp	rpm	bhp	rpm	bhp	rpm	bhp	rpm	bhp	rpm	bhp	rpm	bhp	rpm	bhp
3500	—	—	—	—	*644*	*0.95*	*704*	*1.09*	760	1.24	813	1.40	864	1.56	913	1.72
4000	—	—	*624*	*1.1*	*682*	*1.26*	*737*	*1.42*	789	1.58	839	1.75	887	1.92	933	2.10
4500	*615*	*1.29*	*672*	*1.47*	*725*	*1.64*	775	1.82	824	2.0	871	2.19	916	2.37	959	2.56
5000	*670*	*1.72*	*722*	*1.92*	*771*	*2.11*	818	2.31	864	2.51	907	2.71	950	2.91	991	3.12
5500	*723*	*2.22*	*770*	*2.44*	816	2.65	860	2.87	903	3.09	944	3.31	984	3.53	1023	3.75
6000	779	2.84	824	3.07	866	3.31	908	3.54	947	3.78	986	4.02	1024	4.26	1061	4.50
6500	835	3.55	877	3.81	917	4.06	955	4.32	993	4.57	1030	4.83	**1066**	**5.09**	*1101*	*5.35*

Table 25 — 50HQP180 Blower Performance

CFM	AVAILABLE EXTERNAL STATIC PRESSURE (in. wg wet coil and standard filter 1" MERV 5)																			
	0.2		0.4		0.6		0.8		1.0		1.2		1.4		1.6		1.8		2.0	
	rpm	bhp	rpm	bhp	rpm	bhp	rpm	bhp	rpm	bhp	rpm	bhp	rpm	bhp	rpm	bhp	rpm	bhp	rpm	bhp
4500	*655*	*1.41*	*709*	*1.59*	*760*	*1.77*	*810*	*1.95*	857	2.13	902	2.32	946	2.51	989	2.70	1031	2.90	1071	3.10
5000	*712*	*1.88*	*762*	*2.07*	*809*	*2.27*	*855*	*2.47*	899	2.67	941	2.87	983	3.08	1023	3.29	1062	3.50	1101	3.71
5500	*770*	*2.44*	*816*	*2.65*	860	2.87	903	3.09	944	3.31	984	3.53	1023	3.75	1061	3.97	1098	4.20	**1135**	**4.43**
6000	*828*	*3.10*	870	3.33	912	3.57	951	3.80	990	4.04	1028	4.28	1065	4.52	1101	4.76	**1136**	**5.01**	**1171**	**5.25**
6500	889	3.89	928	4.14	967	4.40	1004	4.65	1041	4.91	1076	5.16	**1111**	**5.42**	**1145**	**5.68**	**1179**	**5.94**	**1211**	**6.21**
7000	946	4.77	984	5.05	1020	5.32	1055	5.60	1090	5.87	**1123**	**6.15**	**1156**	**6.43**	**1189**	**6.71**	**1221**	**6.99**	**1252**	**7.27**
7500	1005	5.80	1040	6.09	1074	6.39	1108	6.68	**1140**	**6.98**	**1172**	**7.27**	**1204**	**7.57**	**1235**	**7.86**	**1265**	**8.16**	**1295**	**8.46**

Table 26 — 50VQP181 Blower Performance

CFM	AVAILABLE EXTERNAL STATIC PRESSURE (in. wg wet coil and standard filter 1" MERV 5)																			
	0.2		0.4		0.6		0.8		1.0		1.2		1.4		1.6		1.8		2.0	
	rpm	bhp	rpm	bhp	rpm	bhp	rpm	bhp	rpm	bhp	rpm	bhp	rpm	bhp	rpm	bhp	rpm	bhp	rpm	bhp
4500	*669*	*0.97*	*748*	*1.16*	822	1.35	892	1.56	959	1.77	1023	2.00	—	—	—	—	—	—	—	—
5000	*721*	*1.27*	794	1.47	863	1.69	929	1.91	991	2.13	1052	2.37	*1110*	*2.62*	—	—	—	—	—	—
5500	776	1.63	844	1.86	908	2.09	969	2.32	1028	2.57	*1085*	*2.82*	*1141*	*3.08*	*1194*	*3.35*	*1246*	*3.62*	—	—
6000	830	2.05	893	2.30	953	2.55	1011	2.80	1066	3.06	*1120*	*3.32*	*1173*	*3.60*	*1224*	*3.88*	*1274*	*4.17*	*1322*	*4.47*
6500	886	2.55	944	2.82	1001	3.08	1055	3.35	*1108*	*3.63*	*1159*	*3.91*	*1209*	*4.20*	*1258*	*4.49*	*1305*	*4.8*	*1352*	*5.11*
7000	940	3.12	995	3.40	1048	3.69	*1100*	*3.98*	*1150*	*4.27*	*1199*	*4.57*	*1246*	*4.87*	*1293*	*5.18*	*1338*	*5.50*	*1383*	*5.82*
7500	996	3.77	1048	4.08	1098	4.38	*1147*	*4.69*	*1195*	*5.00*	*1241*	*5.31*	*1287*	*5.63*	*1331*	*5.96*	*1375*	*6.29*	*1417*	*6.63*

NOTE: Blower performance tables is based on Wet Coil and Standard Filter (1" MERV 5).

LEGEND

	—	Do not operate in shaded area.
Italics/underline	—	Values indicates outside of standard drive package rpm range. Reach out application group for alternative drive package (ETO).
Bold	—	Indicates 5 hp motor selection is required.
bhp	—	Brake horse power (bhp) values are per unit. Refer to the physical data table for quantity of blowers and motors.

Table 27 — 50VQP210 Blower Performance

CFM	AVAILABLE EXTERNAL STATIC PRESSURE (in. wg wet coil and standard filter 1" MERV 5)																			
	0.2		0.4		0.6		0.8		1.0		1.2		1.4		1.6		1.8		2.0	
	rpm	bhp	rpm	bhp	rpm	bhp	rpm	bhp	rpm	bhp	rpm	bhp	rpm	bhp	rpm	bhp	rpm	bhp	rpm	bhp
5500	—	—	—	—	*638*	*1.35*	*702*	*1.60*	763	1.87	—	—	—	—	—	—	—	—	—	—
6000	—	—	—	—	*661*	*1.61*	*723*	*1.88*	780	2.15	835	2.44	—	—	—	—	—	—	—	—
6500	—	—	*620*	*1.61*	*682*	*1.88*	*741*	*2.16*	796	2.46	849	2.76	900	3.08	949	3.40	—	—	—	—
7000	—	—	*647*	*1.92*	*706*	*2.20*	762	2.50	815	2.81	866	3.13	915	3.45	963	3.79	**1008**	**4.14**	—	—
7500	*612*	*1.94*	*672*	*2.24*	*728*	*2.55*	782	2.86	833	3.18	882	3.51	929	3.85	**975**	**4.20**	**1020**	**4.56**	**1063**	**4.94**
8000	*642*	*2.30*	*699*	*2.61*	*753*	*2.94*	804	3.27	853	3.61	901	3.95	947	4.31	**991**	**4.67**	**1034**	**5.05**	**1076**	**5.43**
8500	*672*	*2.69*	*726*	*3.03*	777	3.37	827	3.72	874	4.07	920	4.43	964	4.80	**1007**	**5.18**	**1049**	**5.57**	*1090*	*5.96*

Table 28 — 50VQP240 Blower Performance

CFM	AVAILABLE EXTERNAL STATIC PRESSURE (in. wg Wet coil and standard filter 1" MERV 5)																			
	0.2		0.4		0.6		0.8		1.0		1.2		1.4		1.6		1.8		2	
	rpm	bhp	rpm	bhp	rpm	bhp	rpm	bhp	rpm	bhp	rpm	bhp	rpm	bhp	rpm	bhp	rpm	bhp	rpm	bhp
6500	—	—	*633*	*1.67*	*694*	*1.94*	*752*	*2.22*	807	2.52	860	2.82	910	3.14	—	—	—	—	—	—
7000	*601*	*1.70*	*663*	*1.99*	*721*	*2.28*	776	2.58	828	2.89	879	3.21	927	3.54	974	3.88	**1020**	**4.23**	—	—
7500	*627*	*2.01*	*686*	*2.32*	*742*	*2.62*	795	2.94	845	3.26	894	3.60	941	3.94	**986**	**4.29**	**1031**	**4.66**	**1073**	**5.03**
8000	*659*	*2.39*	*715*	*2.71*	768	3.04	819	3.37	868	3.71	915	4.06	960	4.42	**1004**	**4.78**	**1047**	**5.16**	*1088*	*5.55*
8500	*691*	*2.81*	*744*	*3.15*	795	3.49	844	3.84	890	4.20	936	4.56	**980**	**4.94**	**1022**	**5.32**	**1063**	**5.71**	*1104*	*6.10*
9000	*725*	*3.29*	775	3.64	824	4.01	871	4.37	916	4.75	959	5.13	**1002**	**5.52**	**1043**	**5.91**	1083	6.32	*1122*	*6.73*
9500	758	3.81	806	4.19	853	4.57	898	4.95	941	5.34	**983**	**5.74**	**1024**	**6.15**	**1064**	**6.56**	1103	6.98	*1141*	*7.41*

Table 29 — 50HQP242 Blower Performance

CFM	AVAILABLE EXTERNAL STATIC PRESSURE (in. wg wet coil and standard filter 1" MERV 5)																			
	0.2		0.4		0.6		0.8		1.0		1.2		1.4		1.6		1.8		2.0	
	rpm	bhp	rpm	bhp	rpm	bhp	rpm	bhp	rpm	bhp	rpm	bhp	rpm	bhp	rpm	bhp	rpm	bhp	rpm	bhp
6500	*630*	*1.65*	*691*	*1.92*	*749*	*2.21*	804	2.50	857	2.81	907	3.12	975	3.61	**1020**	**3.92**	—	—	—	—
7000	*668*	*2.02*	*726*	*2.31*	781	2.61	834	2.92	884	3.24	932	3.57	**979**	**3.91**	**1024**	**4.27**	—	—	—	—
7500	*703*	*2.41*	758	2.72	810	3.04	860	3.36	908	3.70	955	4.05	**1000**	**4.40**	**1044**	**4.77**	**1086**	**5.14**	—	—
8000	*739*	*2.86*	791	3.19	841	3.52	889	3.87	935	4.22	**980**	**4.58**	**1023**	**4.95**	**1065**	**5.33**	**1107**	**5.72**	**1147**	**6.12**
8500	777	3.37	827	3.72	874	4.07	920	4.43	964	4.80	**1007**	**5.18**	**1049**	**5.57**	**1090**	**5.96**	**1129**	**6.37**	**1168**	**6.78**
9000	814	3.93	861	4.30	907	4.67	951	5.05	**993**	**5.44**	**1035**	**5.83**	**1075**	**6.24**	**1114**	**6.65**	**1153**	**7.07**	**1190**	**7.49**
9500	850	4.55	895	4.93	939	5.33	**981**	**5.72**	**1022**	**6.13**	**1062**	**6.54**	**1101**	**6.96**	**1139**	**7.38**	**1176**	**7.82**	**1213**	**8.26**

Table 30 — 50VQP300 Blower Performance

CFM	AVAILABLE EXTERNAL STATIC PRESSURE (in. wg wet coil and standard filter 1" MERV 5)																			
	0.2		0.4		0.6		0.8		1.0		1.2		1.4		1.6		1.8		2	
	rpm	bhp	rpm	bhp	rpm	bhp	rpm	bhp	rpm	bhp	rpm	bhp	rpm	bhp	rpm	bhp	rpm	bhp	rpm	bhp
8500	782	3.40	832	3.75	879	4.11	925	4.47	969	4.84	**1012**	**5.22**	**1053**	**5.61**	*1094*	*6.00*	*1133*	*6.41*	*1172*	*6.82*
9000	822	3.99	868	4.36	913	4.73	957	5.11	**1000**	**5.50**	**1041**	**5.89**	*1081*	*6.30*	*1120*	*6.71*	*1158*	*7.13*	*1196*	*7.56*
9500	862	4.64	906	5.03	949	5.42	**991**	**5.82**	**1032**	**6.23**	**1072**	**6.64**	*1110*	*7.06*	*1148*	*7.49*	*1185*	*7.93*	*1222*	*8.37*
10000	899	5.34	941	5.74	**983**	**6.16**	**1023**	**6.57**	**1062**	**7.00**	*1101*	*7.43*	*1138*	*7.86*	*1175*	*8.31*	*1210*	*8.76*	—	—
10500	937	6.11	**978**	**6.54**	**1018**	**6.97**	**1056**	**7.40**	*1094*	*7.84*	*1131*	*8.29*	*1167*	*8.75*	*1203*	*9.21*	*1237*	*9.67*	—	—
11000	**978**	**6.99**	**1017**	**7.43**	**1055**	**7.88**	*1093*	*8.34*	*1129*	*8.80*	*1165*	*9.26*	1200	9.74	—	—	—	—	—	—
11500	**1014**	**7.89**	**1052**	**8.35**	*1089*	*8.82*	*1125*	*9.29*	*1160*	*9.77*	—	—	—	—	—	—	—	—	—	—

NOTE: Blower performance tables are based on Wet Coil and Standard Filter (1" MERV 5).

LEGEND

	—	Do not operate in shaded area.
Italics/underline	—	Values indicates outside of standard drive package rpm range. Reach out application group for alternative drive package (ETO).
Bold	—	Indicates 5 hp motor selection is required.
bhp	—	Brake horse power (bhp) values are per unit. Refer to the physical data table for quantity of blowers and motors.

Table 31 — 50VQP360 Blower Performance

CFM	AVAILABLE EXTERNAL STATIC PRESSURE (in. wg wet coil and standard filter 1" MERV 5)																					
	0.2		0.4		0.6		0.8		1.0		1.2		1.4		1.6		1.8		2.0		2.2	
	rpm	bhp	rpm	bhp	rpm	bhp	rpm	bhp	rpm	bhp	rpm	bhp	rpm	bhp	rpm	bhp	rpm	bhp	rpm	bhp	rpm	bhp
10500	*740*	*4.28*	*788*	*4.69*	834	5.11	878	5.52	920	5.94	962	6.36	1002	6.79	1041	7.23	1079	7.67	1116	8.11	1153	8.56
11000	*768*	*4.86*	814	5.29	858	5.72	901	6.15	942	6.59	982	7.03	1021	7.48	1059	7.93	1096	8.38	1133	8.84	—	—
11500	*798*	*5.50*	842	5.95	885	6.40	926	6.86	966	7.31	1005	7.77	1043	8.23	1080	8.70	—	—	—	—	—	—
12000	828	6.19	870	6.66	912	7.14	951	7.61	990	8.08	1028	8.56	—	—	—	—	—	—	—	—	—	—
12500	857	6.94	898	7.43	938	7.92	977	8.41	1014	8.91	—	—	—	—	—	—	—	—	—	—	—	—
13000	887	7.74	926	8.26	965	8.77	—	—	—	—	—	—	—	—	—	—	—	—	—	—	—	—
13500	916	8.60	—	—	—	—	—	—	—	—	—	—	—	—	—	—	—	—	—	—	—	—

NOTE: Blower performance tables are based on Wet Coil and Standard Filter (1" MERV 5).

LEGEND

	—	Do not operate in shaded area.
Italics/underline	—	Values indicates outside of standard drive package rpm range. Reach out application group for alternative drive package (ETO).
Bold	—	Indicates 5 hp motor selection is required.
bhp	—	Brake horse power (bhp) values are per unit. Refer to the physical data table for quantity of blowers and motors.

OPERATION

Power Up Mode

The unit will not operate until all the inputs, terminals and safety controls are checked for normal operation.

NOTE: The compressor will have a 5-minute anti-short cycle upon power up.

Unit Protection Module (UPM)

All Carrier WSHP units feature an advanced UPM which implements all the critical equipment safeties and allows for continuous safe and reliable operation. Fig. 62 shows the UPM sequence of operations for units safeties. Refer to Step 10 — Configure Unit Control Components on page 56 for detailed information about Safeties and Alarms.

Sequence of Operation of Constant Volume (CV)/Staged Air Volume (SAV) Units without DDC Controller

STANDBY

Y and W terminals are not active in Standby mode. However, the O and G terminals may be active, depending on the application. The compressor will be off.

COOLING

Y and O terminals are active in Cooling mode. After power up, the first call to the compressor will initiate a 270 to 300 second random start delay and a 5-minute anti-short cycle protection time delay. After both delays are complete, the compressor is energized.

NOTE: On all subsequent compressor calls the random start delay is omitted.

HEATING STAGE 1

Terminal Y is active in heating stage 1. After power up, the first call to the compressor will initiate a 270 to 300 second random start delay and a 5-minute anti-short cycle protection time delay. After both delays are complete, the compressor is energized.

NOTE: On all subsequent compressor calls the random start delay is omitted.

HEATING STAGE 2

To enter Stage 2 mode (units equipped with 2 step compressor or with two compressors only), terminal Y2 is active (Y is already active). Also, the G terminal must be active or the W terminal is disregarded. The compressor relay will remain on and EH1 is immediately turned on. EH2 will turn on after 10 minutes of continual stage 2 demand.

LOCKOUT MODE

The status LED will flash fast in Lockout mode and the compressor relay will be turned off immediately. Lockout mode can be “soft” reset via the Y input or can be reset via the disconnect depending on the DIP switch settings. The last fault causing the lockout is stored in memory and can be viewed by entering test mode.

HOT GAS REHEAT (OPTIONAL)

Terminal H is active in dehumidification mode with hot gas reheat. After a call for H, the reversing valve (O), compressor (Y), and fan (G) are also enabled.

NOTE: Any call for cooling (Y), heating (Y or W), or reversing valve (O) will override dehumidification mode (H).

WATERSIDE ECONOMIZER (OPTIONAL)

Y1/Y2 and O terminals are active in Cooling mode. When the entering water temperature drops below the entering water temperature set point on the waterside economizer aquastat, the compressor and reversing valve are disabled during first stage cooling call (Y1) and the waterside economizer is enabled. The waterside economizer three way control valve will divert water to the economizer coil for free cooling. When thermostat sends a second stage cooling call (Y2), that turns ON the first-stage compressor (Y1) to supplement the waterside economizer coil. When the entering water temperature rises above the aquastat set point, the waterside economizer is disabled and the compressor and reversing valve are enabled.

BOILERLESS HEAT (OPTIONAL)

When the entering water temperature is below the boilerless heat aquastat entering water temperature set point and there is a call for heating (Y), the compressor is disabled and the auxiliary heat output is enabled. When the entering water temperature is above the aquastat set point, the auxiliary heat output is disabled and the compressor is enabled.

PUMP/VALVE RELAY (OPTIONAL)

The pump/valve relay is enabled anytime there is a call for cooling (Y), heating (Y), or dehumidification (H) and can be used to enable/disable field installed flow control valves or circulator pumps. When there is no call for cooling, heating, or dehumidification, pump/valve relay is disabled.

REFRIGERANT LEAK DETECTION SYSTEM

The A2L sensor continually samples the air and if the concentration of refrigerant detected is higher than the preset threshold (15% LFL), it sends a signal to the UPM which then switches off the compressor and turns on the blower. The compressor will remain off until saturation level is below 15% LFL. The A2L sensor is connected to the UPM, it must always remain connected. If communication is lost, the UPM will enter refrigerant leak hard lockout fault and energize the alarm contact. To test that the communication between the sensor and board is active, the sensor can be disconnected from the UPM, which should simulate a fault. The A2L sensor for the refrigerant leak detection system shall only be replaced with the part specified on the spare parts list.

⚠ WARNING

When refrigerant leak detection system installed, unit must be powered except for service.

COMPRESSOR STATUS RELAY (OPTIONAL)

Optional relay providing compressor status via a normally open set of dry contacts.

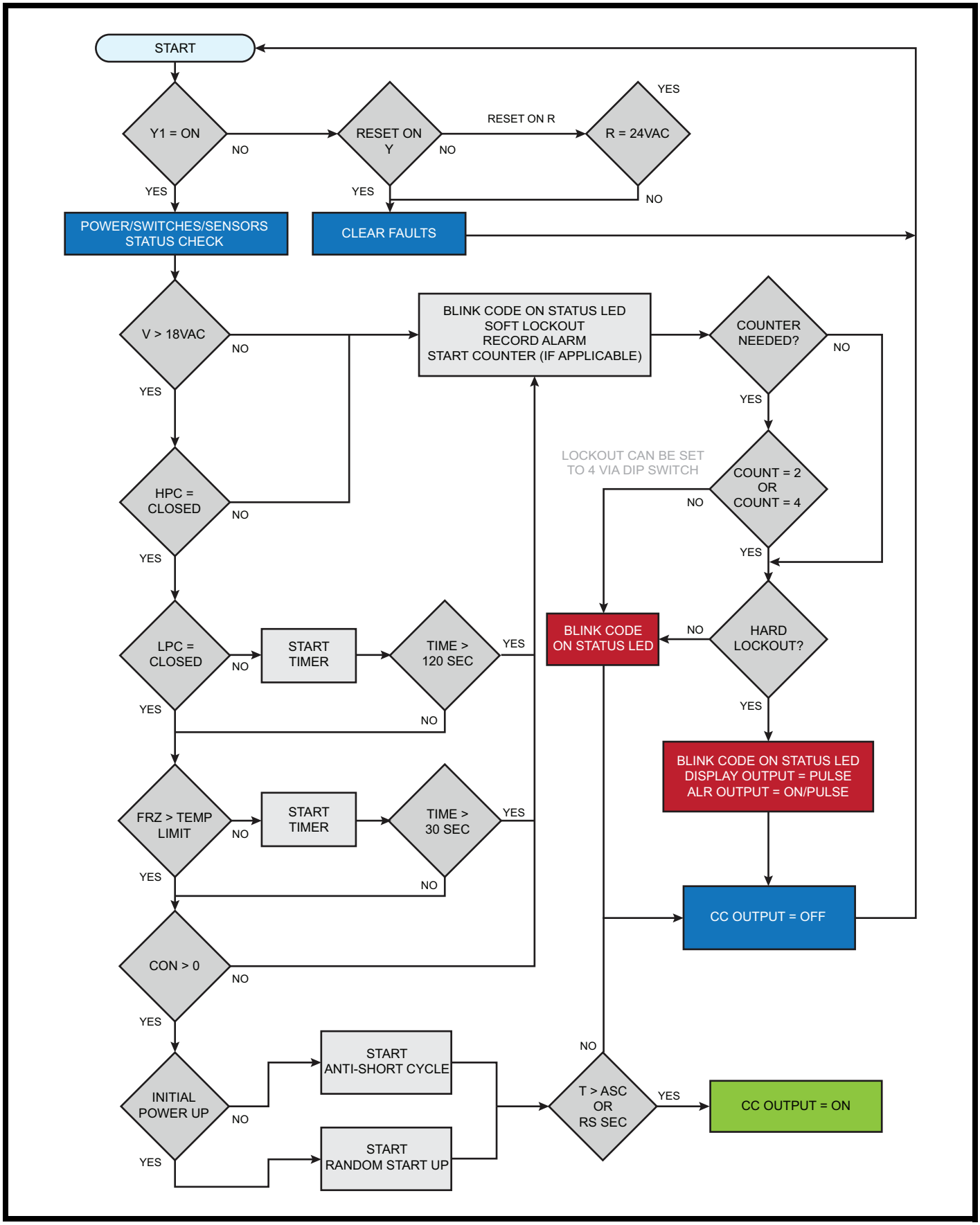

Fig. 62 — UPM Sequence of Operations

Sequence of Operation for Units with TruVu™ DDC Controller

Units with TruVu™ DDC controller still feature a UPM board for unit operation, so the operation will be similar to the sequence for CV or SAV units without DDC controller. TruVu™ does feature advanced functionality, such as automatic fan speed control and intelligent alarming, which will differ from units with UPM board only. Below is an overview of the different features for the TruVu™ controller. For more details of the TruVu™ controller operation, please refer to the TruVu™ Integration Guide and the WSHP Points/Properties Manual. See Fig. 63 for TruVu™ controller overview.

SCHEDULING

Time periods can be configured to schedule the transitions from occupied to unoccupied operation. The time periods control the space temperature to occupied heating and cooling setpoints. The unit operates continuously in the Occupied mode until a time schedule is configured by using either the TruVu™ ET, Field Assistant, the i-Vu® application, or a third-party control system enables/disables the BAS On/Off point. The local time and date for these functions must be set to operate properly.

The occupancy source can be changed to one of the following:

Occupancy Schedules

The controller is occupied 24/7 until you configure a time schedule using either the TruVu™ Equipment Touch (ET), Field Assistant, the i-Vu® application, or a third party Enables/Disables the BAS On/Off point. You can disable this by going to ***Configuration → Unit Configuration → Occupancy Schedules***, changing the point from Enable to Disable and clicking OK.

NOTE: You must Enable this point in order for the TruVu™ ET, Field Assistant, or the i-Vu® application to assign a time schedule to the controller.

Schedule_Schedule

The unit operates according to the schedule configured and stored in the unit. The schedule is accessible via the TruVu™ ET, the i-Vu® application, or Field Assistant. The daily schedule consists of a start and stop time (standard or 24-hour mode) and 7 days of the week, starting with Monday and ending on Sunday.

NOTE: Scheduling can only be controlled from one source.

Occupancy Input Contact (Option)

If configured for remote occupancy control (default), the TruVu™ can use an external dry contact closure to determine the occupancy status of the unit. You must disable the Occupancy Schedules in order to use the occupancy contact input. The unit enters an occupied mode when it senses the abnormal input. After the input returns to its normal state, the unit stays in the occupied mode for the configured Occ Override Delay period (15 minutes default).

BAS (Building Automation System) On/Off

For use with a Building Automation System that supports network scheduling, you must disable the Occupancy Schedules so the BAS system can control the unit through a network communication and the BAS scheduling function.

Global Occupancy Scheduling

The TruVu™ can read the occupancy status from another unit so that a group of WSHP's can be controlled from a single occupancy schedule. The local Occupancy Schedules must be disabled in order to use the global occupancy input.

BACnet Network Occupancy Input

The TruVu™ can accept an external BACnet Binary Network Input for occupancy control. This function is only compatible with units used in BACnet systems. You need to configure the System Occupancy BACnet network input point to locate the device and point name where the external occupancy point information resides. You must also disable Occupancy Schedules in order to use this input.

INDOOR FAN

Fan Modes

You can configure the indoor fan to operate in any one of 3 Fan Modes:

- Auto - intermittent operation during both occupied and unoccupied periods
- Continuous (default) - intermittent operation during unoccupied periods and continuous during occupied periods
- Always on - operates the fan continuously during both occupied and unoccupied periods

In the Continuous default mode, the fan is turned on when any one of the following is true:

- It is in occupied mode, which is determined by the occupancy status
- There is a demand for cooling or heating in the unoccupied mode
- There is a call for dehumidification (optional)

Auto Fan Speed Control

The TruVu™ can control up to 3 fan speeds for units with provided VFD. The motor operates at the lowest speed possible to provide quiet and efficient fan operation with the best latent capability. The motor increases speed if additional cooling or heating is required to reach the desired space temperature setpoint. The control increases the motor's speed as the space temperature rises above the cooling or below the heating setpoint. The amount of space temperature increase above or below the setpoint required to increase the fan speed is configurable in the setpoint. Also, the control increases the fan speed as the Supply Air Temperature approaches the configured minimum or maximum limits.

- Heating Max SAT Control - When heat is required and active, the control continuously monitors the supply air temperature to verify it does not rise above the configured Maximum Heating SAT Limit (110° default). As the SAT approaches this value, the control increases the fan speed as required to ensure the SAT remains within the limit. This provides the most quiet and efficient operation by running the fan at the lowest speed possible.
- Cooling Min SAT Control - When mechanical cooling is required and active, the control continuously monitors the supply air temperature to verify it does not fall below the configured Minimum Cooling SAT Limit (50° default). As the SAT approaches this value, the control increases the fan speed as required to ensure the SAT will remain within the limit. Fan operates at the lowest speed during dehumidification to maximize latent capacity during cooling.

Fan Delay

When power is reapplied after a power outage, there is a configurable delay of 5 - 600 seconds (default 60) before starting the fan. You must configure the fan delay:

- The Fan On Delay defines the delay time (0 - 30 seconds, default 10) before the fan begins to operate after heating or cooling is started.
- The Fan Off Delay defines the delay time (0 - 180 seconds, default 45) the fan continues to operate after heating or cooling is stopped.

NOTE: The fan continues to run as long as the compressors, heating stages, or the dehumidification relays are on. If the SPT failure alarm, ZS Sensor failure alarm, or condensate overflow alarm is active, the fan is shutdown immediately, regardless of occupancy state or demand.

Fan Status

You can configure an optional input as either an occupancy input contact or a fan status input. If configured as fan status, the controller compares the status of the fan to the desired commanded state. When the fan is commanded to run (ON), the fan status is

checked and verified to match the commanded state. If the fan status is not on, then a fan status alarm is generated after 1 minute and the equipment's compressor(s) and auxiliary heat is disabled and the optional OA damper closes.

COOLING OPERATION

Space Temperature Control

The TruVu™ operates 1 or 2 stages of compression to maintain the desired cooling setpoint. The compressor outputs are controlled by the PI (Proportional-integral) cooling loop and cooling stages capacity algorithm. The algorithm calculates the desired number of stages needed to satisfy the space by comparing the control temperature (return air or space) to the appropriate cooling setpoint.

NOTE: The waterside economizer, if applicable, is used for 1st stage cooling, in addition to the compressor(s). The following conditions must be true for the cooling algorithm to run:

- Cooling is set to Enable.
- The Fire/Smoke Input and Shutdown modes are inactive.
- Heat mode is not active and the compressor time guard(s) have expired.
- Condensate Overflow alarm status is Normal.
- Fan Status is True (if option is enabled).
- If occupied, the control temperature is greater than the occupied cooling setpoint.
- Control temperature reading is valid.
- If unoccupied, the control temperature is greater than the unoccupied cooling setpoint.
- If economizer cooling is available and active, and the economizer alone is insufficient to provide enough cooling.
- OAT > Cooling Lockout Temperature if OAT is available.
- Source Water Pump is on (if Source Water Linkage is active).
- Water Flow Switch Status is True (if option is enabled).

If all of the above conditions are met, the compressors' relays are energized as required. Otherwise, they will be de-energized. If cooling is active and if the SAT approaches the minimum SAT limit, the fan will be indexed to the next higher speed. If this is insufficient, and if the SAT falls further (equal to the minimum SAT limit), the fan will be indexed to the maximum speed. If the SAT still continues to falls 5°F below the minimum SAT limit, all cooling stages will be disabled.

During Cooling, the reversing valve output is held in the cooling position (either B or O type, as configured), even after the compressor is stopped. The valve does not switch position until the heating mode is required.

The configuration screens contain the Min SAT parameter as well as Cooling Lockout based on outdoor air temperature (OAT). Both can be adjusted to meet various specifications.

Passive Dehumidification

When the unit is configured for auto fan speed control the TruVu™ will use the lowest fan speed setting possible to meet the setpoint and stay within the maximum SAT limits. Using the lowest fan speed possible in cooling operation will provide a method of passive dehumidification allowing for enhanced latent capacity.

Hot Gas Reheat Dehumidification

The TruVu™ provides occupied and unoccupied dehumidification only on units that are equipped with the reheat option. This function requires an accessory hardwired space relative humidity sensor. When using a relative humidity sensor to control dehumidification during occupied or unoccupied times, the dehumidification setpoints are used accordingly. Also, you may use a ZS Humidity Sensor or a network input point System Space RH in place of the hardwired RH sensor.

When the indoor relative humidity becomes greater than the dehumidification setpoint, a dehumidification demand is acknowledged. Once acknowledged, the dehumidification output is energized, bringing on the supply fan (medium speed), mechanical cooling, and the integral reheat coil. The controls engage cooling mode and the waste heat from the compressor cooling cycle is returned to the reheat coil simultaneously, meaning that the reversing valve causes the compressor to operate in the cooling mode.

NOTE: During cooling mode, the unit cools and dehumidifies, and disables the reheat coil. However, once the call for cooling has been satisfied and there is still a call for dehumidification, the unit continues to operate in the reheat mode.

HEATING OPERATION

Space Temperature Control (Reverse Cycle Heating)

The TruVu™ operates 1 or 2 stages of compression to maintain the desired heating setpoint. The compressor outputs are controlled by the heating PI (Proportional-integral) loop and heating stages capacity algorithm. The algorithm calculates the desired number of stages needed to satisfy the space by comparing the control temperature (return air or space) to the appropriate heating setpoint.

The following conditions must be true for the heating algorithm to run:

- Heating is set to Enable
- The Fire/Smoke Input and Shutdown modes are inactive
- Cool mode is not active and the compressor time guard has expired
- Condensate Overflow alarm status is Normal
- Fan Status is True (if option is enabled)
- If occupied, the control temperature is less than the occupied heating setpoint
- Control temperature reading is valid
- If unoccupied, the control temperature is less than the unoccupied heating setpoint
- OAT > — < Heating Lockout Temperature if OAT is available
- Source Water Pump is on (if Source Water Linkage active)
- Water Flow Switch Status is True (if option is enabled)

If all the above conditions are met, the heating outputs are energized as required, otherwise they are de- energized. If heating is active and the SAT approaches the maximum SAT limit, the fan is indexed to the next higher speed. If this is insufficient, and if the SAT rises further and reaches the Maximum Heating SAT limit, the fan is indexed to the maximum speed. If the SAT still continues to rise 5°F above the maximum limit, all heating stages are disabled.

Space Temperature Control (Reverse Cycle Heating and Auxiliary Heat)

The TruVu™ can control a 2-position or modulating water or steam valve, connected to a coil on the discharge side of the unit and supplied by a boiler, or a single stage ducted electric heater, in order to maintain the desired heating setpoint. If the compressor capacity is insufficient, or a compressor failure occurs, the auxiliary heat is used. Unless the compressor fails, the auxiliary heat only operates to supplement the heat provided by the compressor, if the space temperature falls more than 1°F below the desired heating setpoint. (This amount is configurable.) The heat is controlled so the SAT does not exceed the Maximum Heating SAT limit.

The same conditions required for Reverse Cycle Heating must be true in order for the Auxiliary Heat algorithm to run.

<u>Auxiliary Modulating Hot Water / Steam Heating</u>

The control can modulate a hot water or steam valve connected to a coil on the discharge side of the unit, and supplied by a boiler in order to maintain the desired heating setpoint, if the compressor capacity is insufficient, or a compressor failure occurs. Unless a compressor fault condition exists, the valve only operates to supplement the heat provided by the compressor if the space

temperature falls more than 1°F below the desired heating setpoint. The valve is controlled so the SAT does not exceed the Maximum Heating SAT limit.

2- Position Hot Water / Steam Heating

The control can operate a 2-position, NO or NC, hot water or steam valve, connected to a coil on the discharge side of the unit and supplied by a boiler, in order to maintain the desired heating setpoint, if the compressor capacity is insufficient or a compressor failure occurs. Unless a compressor fault condition exists, the valve only opens to supplement the heat provided by the compressor, if the space temperature falls more than 1°F below the desired heating setpoint. The valve is controlled so the SAT does not exceed the Maximum Heating SAT limit and is subject to a 2-minute minimum OFF-time to prevent excessive valve cycling.

Single or two stage Electric Auxiliary Heat

The control can operate a field-installed single or two stage of electric heat that is installed on the discharge side of the unit, in order to maintain the desired heating setpoint, if the compressor capacity is insufficient or a compressor failure occurs. Unless a compressor fault condition exists, the heat stage only operates to supplement the heat provided by the compressor if the space temperature falls more than 1°F below the desired heating setpoint. The heat stage is controlled so the SAT does not exceed the Maximum Heating SAT limit and is subject to a 2-minute minimum OFF-time to prevent excessive cycling.

"Boilerless" Control (Reverse Cycle Heating or Auxiliary Heat)

The TruVu™ can be configured to control the auxiliary heat source for "boilerless" types of systems or system with no means for heat injection into the source water loop. Reverse cycle heating will be disabled, and the auxiliary heat source will be enabled when the entering water temperature drops below the configurable boilers electric heat setpoint.

WATERSIDE ECONOMIZER

The TruVu™ can provide modulating, or 2-position waterside economizer operation (for a factory or field-installed economizer coil mounted to the return air side of the unit and connected to the source water loop), in order to provide free cooling or preheating, when water conditions are optimal. Waterside economizer settings can be accessed on ***PROPERTIES → EQUIPMENT → STATUS***.

The following conditions must be true for economizer operation:

- SAT reading is available
- EWT reading is available
- If occupied, the control temperature is greater than the occupied cooling setpoint or less than the occupied heating setpoint and the source water is suitable
- Space temperature reading is valid
- If unoccupied, the SPT or ZS is greater than the unoccupied cooling setpoint, or less than the unoccupied heating setpoint, and the source water is suitable

Modulating Waterside Economizer Control

Modulates a water valve to control source water flowing through a coil on the entering air side of the unit

- Cooling - Provides an economizer cooling function by using the source water loop when the entering water loop temperature is at least 5°F below space temperature. If the water loop conditions are suitable, the valve modulates open to maintain a Supply Air Temperature that meets the load conditions. If the economizer coil capacity alone is insufficient for a period greater than 5 minutes, or if a high humidity condition occurs, then the compressor starts, in order to satisfy the load. If the SAT approaches the Minimum Cooling SAT limit (***HOME → CONFIG → UNIT***), the economizer valve modulates closed during compressor operation.
- Heating - In addition, the control modulates the water valve if the entering source water loop temperature is suitable for heating (at least 5°F above space temperature) and heat is required. The valve is controlled in a similar manner, except to satisfy the heating requirement. If the coil capacity alone is insufficient to satisfy the space load conditions for more than 5 minutes, then the compressor starts in order to satisfy the load. If the SAT approaches the Maximum Heating SAT limit, the economizer valve modulates closed during compressor operation.

2-position Waterside Economizer Control

The 2-position waterside economizer control has the capability to control a NO or NC, 2-position water valve to control source water flow through a coil on the entering air side of the unit.

- Cooling - The purpose is to provide a cooling economizer function directly from the source water loop when the entering water loop temperature is at least 5°F below space temperature. If the optional coil is provided and the water loop conditions are suitable, then the valve opens to provide cooling to the space, when required. If the capacity is insufficient for a period greater than 5 minutes, or if a high humidity condition occurs, the compressor is started in order to satisfy the load. If the SAT reaches the Minimum Cooling SAT limit, the economizer valve closes during compressor operation.
- Heating - In addition, the economizer control opens the water valve, if the entering water loop temperature is suitable for heating (at least 5°F above space temperature) and heat is required. The valve is controlled in a similar manner, except to satisfy the heating requirement. If the coil capacity is insufficient to satisfy the space load for more than 5 minutes, then the compressor is started to satisfy the load. If the SAT reaches the Maximum Heating SAT limit, the economizer valve closes during compressor operation.

INDOOR AIR QUALITY (IAQ) AND DEMAND CONTROL VENTILATION (DCV)

If the optional hardwired indoor air quality sensor is installed, ZS CO_2 (IAQ), or the System Space AQ network input point is used, the TruVu™ maintains indoor air quality with a modulating OA damper, which provides demand- controlled ventilation. The control operates the modulating OA damper during occupied periods, monitors the CO_2 level, compares it to the configured setpoints, and adjusts the ventilation rate, as required. The control provides proportional ventilation to meet the requirements of ASHRAE specifications by providing a base ventilation rate and then increasing the rate as the CO_2 level increases. The control proportionally increases ventilation when the CO_2 level rises above the start ventilation setpoint and reaches the full ventilation rate when the CO_2 level is at or above the maximum setpoint.

You can configure a minimum damper position to ensure that proper base ventilation is delivered when occupants are not present. Access the IAQ configurations through the Configuration screen.

The following conditions must be true in order for this algorithm to run:

- Damper Control is configured for DCV
- The Fire/Smoke Input and Shutdown modes are inactive
- Fan Status is True (if option is enabled)
- The unit is in an occupied mode
- IAQ sensor reading is greater than the DCV Start CTRL Setpoint

The control has the following 4 adjustable setpoints:

- DCV Start Ctrl Setpoint
- DCV Max Ctrl Setpoint
- Minimum Damper Pos
- DCV Max Vent Damper Pos

NOTE: For the damper to maintain proper base ventilation, you must configure the fan as "Continuous" or "Always On."

2-Position OA Damper

Alternatively, the controller can be configured to operate as a ventilation damper in a 2-position ventilation mode to provide the minimum ventilation requirements during occupied periods.

Differential pressure switch / water flow switch

The flow switch monitors the pressure difference between two points on the waterside. An optional input can be configured as condenser water flow status input. If configured, the flow status must be ON for 3 seconds to enable the compressors.

COMPRESSOR STATUS

The TruVu™ provides a status input to monitor the compressor operation. The status is monitored to determine if the compressor status matches the commanded state. This input is used to determine if a refrigerant safety switch or other safety device has tripped and caused the compressor to stop operating normally. If this occurs, an alarm is generated to indicate the faulted compressor condition.

DEMAND LIMITING

The TruVu™ can accept 3 levels of demand limit from the BACnet network. In response to a demand limit, the unit decreases its heating setpoint and increases its cooling setpoint to widen the range, in order to immediately lower the electrical demand. You can configure the temperature adjustment for both heating and cooling and for each demand level. You can also set the response to a particular demand level to 0.

REMOTE DISABLE

Fire/Smoke Detector Input

The TruVu™ can read the status of a normally closed FSD contact input to determine if a fire or smoke detector alarm is present. If the controller determines an alarm condition is present, all heating, cooling, and the fan are disabled. The switch is factory-set to Normally Closed and cannot be changed.

Shutdown Input

The TruVu™ controller has a shutdown input (software point) which, when set to its Active mode causes the WSHP to safely shutdown in a controlled fashion. Heating and cooling is disabled after any minimum runtime conditions expire and the fan is disabled after the fan-off timer expires. All alarms are reset but any active alarm remains active. After the shutdown input transitions from Active mode to Inactive, the TruVu™ restarts after the configured power fail restart delay expires.

ALARMS

High Discharge Pressure (UPM Alarm)

The TruVu™ WSHP monitors the status of a high discharge pressure fault condition via the serial port (S1). The fault condition is determined by the Unit Protection Module (UPM) included on all WSHPs. The UPM monitors a high-pressure switch input and establishes a high-pressure fault when the discharge pressure exceeds 600 PSIG. Upon fault a 5-minute break is initiated (soft lockout) and the compressor is disabled. The unit will automatically restart after this time period. If the fault occurs 2 times (configurable on UPM) within 60 minutes the UPM will put the unit into hard lockout requiring manual reset. Manual reset can be accomplished remotely when the UPM is configured for the reset method "Y" by remotely disabling the unit via the TruVu™ WSHP.

Low Suction Pressure (UPM Alarm)

The TruVu WSHP monitors the status of a low suction pressure fault condition via the serial port (S1). The fault condition is determined by the Unit Protection Module (UPM) included on all WSHPs. The UPM monitors a low-pressure switch input and establishes a high-pressure fault when the discharge pressure drops below 40 PSIG. Upon fault a 5-minute break is initiated (soft lockout) and the compressor is disabled. The unit will automatically restart after this time period. If the fault occurs 2 times (configurable on UPM) within 60 minutes the UPM will put the unit into hard lockout requiring manual reset. Manual reset can be accomplished remotely when the UPM is configured for the reset method "Y" by remotely disabling the unit via the TruVu™ WSHP.

Air Coil Freeze Alarm (UPM Alarm)

The TruVu WSHP monitors the status of an air coil freeze fault condition via the serial port (S1). The fault condition is determined by the Unit Protection Module (UPM) included on all WSHPs. The UPM monitors the heating liquid line refrigerant temperature and establishes a high-pressure fault if the temperature drops below 25°F (configurable on UPM) for 30 seconds. Upon fault a 5-minute break is initiated (soft lockout) and the compressor is disabled. The unit will automatically restart after this time period. If the fault occurs 2 times (configurable on UPM) within 60 minutes the UPM will put the unit into hard lockout requiring manual reset. Manual reset can be accomplished remotely when the UPM is configured for the reset method "Y" by remotely disabling the unit via the TruVu™ WSHP.

Water Coil Freeze Alarm (UPM Alarm)

The TruVu™ WSHP monitors the status of a water coil freeze fault condition via the serial port (S1). The fault condition is determined by the Unit Protection Module (UPM) included on all WSHPs. The UPM monitors the cooling liquid line refrigerant temperature and establishes a high-pressure fault if the temperature drops below 25°F (configurable on UPM) for 30 seconds. Upon fault a 5-minute break is initiated (soft lockout) and the compressor is disabled. The unit will automatically restart after this time period. If the fault occurs 2 times (configurable on UPM) within 60 minutes the UPM will put the unit into hard lockout requiring manual reset. Manual reset can be accomplished remotely when the UPM is configured for the reset method "Y" by remotely disabling the unit via the TruVu™ WSHP.

Condensate Overflow Alarm (UPM Alarm)

The TruVu™ WSHP monitors the status of a condensate overflow fault condition via the serial port (S1). The fault condition is determined by the Unit Protection Module (UPM) included on all WSHPs. The UPM monitors a condensate overflow switch and upon fault puts the unit in a hard lockout condition, disabling the compressor. The hard lockout condition requires manual reset. Manual reset can be accomplished remotely when the UPM is configured for the reset method "Y" by remotely disabling the unit via the TruVu™ WSHP.

Brownout Alarm (UPM Alarm)

The TruVu™ WSHP monitors the status of a brownout fault condition via the serial port (S1).

Fire/Smoke Detector Alarm

The control monitors the voltage input to J1-9 to detect if a smoke detector or fire detector NC contact has opened, indicating an alarm condition. The control verifies the presence of 24 Vac on this input. If the input opens at any time, an alarm is generated after 3 seconds and the equipment (fan, compressor, aux heat, and damper) immediately shuts down.

Space Temperature Alarms

The control provides the ability to generate an alarm when the space temperature exceeds the alarm setpoint. A separate occupied hysteresis and fixed unoccupied high and low alarm setpoints are provided. The control provides a 5-minute alarm delay

during unoccupied periods. During occupied periods, the control uses the occupied temperature setpoint and applies the hysteresis value to determine the alarm setpoints. When occupancy transitions from unoccupied to occupied or the occupied temperature setpoints are changed, causing an alarm condition to occur, the control automatically calculates an alarm delay (equivalent to the configured delay time in minutes/ °F, multiplied by the temperature error, + 15 minutes). This prevents nuisance alarms when an occupancy change occurs and allows time for the unit to correct an alarming temperature condition.

Source Water Temperature Alarm

The control has 4 configurable alarm limits for source water temperature. The control verifies that the water temperature is within operating range (between high and low limits) for the specific operating mode (heating or cooling) before energizing the compressor. Once the compressor is started, the source water temperature is further monitored to verify that it is within limits to insure sufficient water is flowing through the coil. If the leaving water temperature rises above or falls below the appropriate limits, and lasts for more than 15 seconds, an alarm is generated and the compressor shuts down.

Supply Air Temperature Alarm

The control has 2 configurable alarm limits for supply air temperature. The control verifies that the supply air temperature is within operating range (between high and low limits) when the compressor or auxiliary heat is operating. If the air temperature rises above or falls below the appropriate limits, and this lasts for more than 5 minutes, an alarm is generated.

Fan Status Alarm (optional)

The control generates a fan status alarm if the fan status input detects the fan is OFF after any fan speed output has been enabled. A 30-second alarm delay is used to allow the fan to start operation before an alarm condition is detected. The control monitors the fan output and if the fan is operating at any speed, the fan status must detect the fan is operating.

Compressor Status Alarm

The control generates a compressor failure alarm if the compressor status input detects the compressor is OFF after the compressor output has been energized. A 6-minute alarm delay is used to allow the compressor to start (prevents alarms due to timeguard operation) before an alarm condition is detected. The control monitors the compressor output and if the compressor output is energized, the compressor status input must detect the compressor operation.

Filter Status Alarm

The control provides the ability to generate a dirty filter alarm after the number of fan run hours exceeds a configurable filter alarm timer limit. The control monitors the fan output and if the fan is operating at any speed, it accumulates run time. If the fan run time hours exceed the configurable limit, an alarm is generated. To reset the alarm timer after the alarm has been generated, a Reset Filter Alarm input is provided. You can disable the filter alarm by setting the Filter Alarm Timer Delay to 0 (factory default).

Indoor Air Quality Alarm

The control provides the ability to generate a high CO_2 level alarm during occupied periods when the CO_2 sensor value exceeds the adjustable limit. When a transition from unoccupied to occupied occurs, or the occupied alarm limit is changed to a value that causes an alarm condition to occur, the control will automatically calculate an alarm delay (equivalent to the configured delay time in minutes/ppm, times the error that occurred, + 15 minutes). This prevents nuisance alarms from occurring when occupancy changes or the setpoint is changed. You can disable the IAQ alarm by setting Occupied High IAQ Alarm Limit to 0.

Relative Humidity Alarm

The control provides the ability to generate an alarm when the space relative humidity exceeds the alarm setpoint. Separate occupied and unoccupied high humidity alarm setpoints are provided. The control provides a 5-minute alarm delay during unoccupied periods. During occupied periods, the controller uses the occupied high RH alarm limit. When an occupancy transition from unoccupied to occupied occurs, or the occupied high alarm limit is lowered, causing an alarm condition to occur, the control automatically calculates an alarm delay (equivalent to the configured delay time in minutes/% RH, times the humidity error condition that occurred, + 15 minutes). This prevents nuisance alarms when an occupancy change occurs and allows time for the unit to correct an alarming humidity condition.

Source Water Linkage Failure Alarm (if Source Water Linkage was active)

The control generates a Source Water Linkage failure alarm if Linkage fails after once being active. The Linkage status is monitored and if it fails to be updated from the Loop controller, then a Source Water Linkage alarm is generated. There is a 6-minute alarm delay to prevent false alarms.

NOTE: You can reset this alarm only by re-establishing Linkage and correcting the condition that caused the Linkage failure, or by momentarily setting the Shutdown point to Active.

Airside Linkage Failure Alarm (if Airside Linkage was active)

The control generates an Airside Linkage failure alarm if Linkage fails after once being active. The Linkage status is monitored and if it fails to be updated from the master zone controller, then an Airside Linkage alarm is generated. There is a 6-minute alarm delay to prevent false alarms.

NOTE: You can reset this alarm only by re-establishing Linkage and correcting the condition that caused the Linkage failure, or by momentarily setting the Shutdown point to Active.

OAT Sensor Alarm (if Network OA Temperature was active)

The control generates an OAT Sensor failure alarm if the value of OAT fails to be updated through the network after once being active. The update status is monitored and if it fails to be updated, then an OAT sensor alarm is generated. There is an alarm delay (approximately 1 hour) to prevent false alarms, while minimizing the required update rate for OAT.

NOTE: You can reset this alarm by momentarily setting the Shutdown point to Active.

SPT Sensor Alarm (if SPT sensor was active)

The control generates an SPT sensor failure alarm if the SPT sensor fails to communicate with the control for 5 minutes or greater. The update status is monitored and if it fails to be updated, then an SPT sensor alarm is generated.

ZS Sensor Alarm (if ZS sensor was active)

The control generates a ZS sensor failure alarm if the ZS sensor fails to communicate with the control for 5 minutes or greater. The update status is monitored and if it fails to be updated, then a ZS sensor alarm is generated.

UPM Alarm - Hard lockout status

The control generates Alarm when Hard lockout Alarm is active on UPM board. Configurable 2 or 4 soft lockout alarms on UPM board before unit enters to hard lock out. Soft lockout alarm history is available via controller.

Low Water Flow Alarm

The control monitors differential pressure switch (water flow switch), and generates alarm if water flow is not met.

Air Side Delta T Alarm

The control has 4 configurable alarm limits for Air side Delta T. The control verifies that the calculates delta T based on Return and Supply Air temperatures reading and verifies if it operates within configured ranged (between high and low limits) for the specific operating mode (heating or cooling) before energizing the compressor.

Source Water Valve Alarm

The control generates alarm if communication with Act Net device is lost.

Water Side Delta T Alarm

The control has 4 configurable alarm limits for Source water Delta T. The control verifies that the calculates delta T based on Entering and Leaving water temperatures reading and verifies if it operates within configured ranged (between high and low limits) for the specific operating mode (heating or cooling) before energizing the compressor.

Entering Water Temperature Alarm

The control has 4 configurable alarm limits for Entering Water temperature. The control verifies that the entering water temperature is within operating range (between high and low limits) for the specific operating mode (heating or cooling) before energizing the compressor. Once the compressor is started, the entering water temperature is further monitored to verify that it is within limits to insure sufficient water is flowing through the coil. If the entering water temperature rises above or falls below the appropriate limits, and lasts for more than 15 seconds, an alarm is generated and the compressor shuts down.

Return Air Temperature Alarm (if RAT sensor is field provided)

The control has 2 configurable alarm limits for return air temperature. The control verifies that the return air temperature is within operating range (between high and low limits) when unit is operating. If the air temperature rises above or falls below the appropriate limits, and this lasts for more than 5 minutes, an alarm is generated.

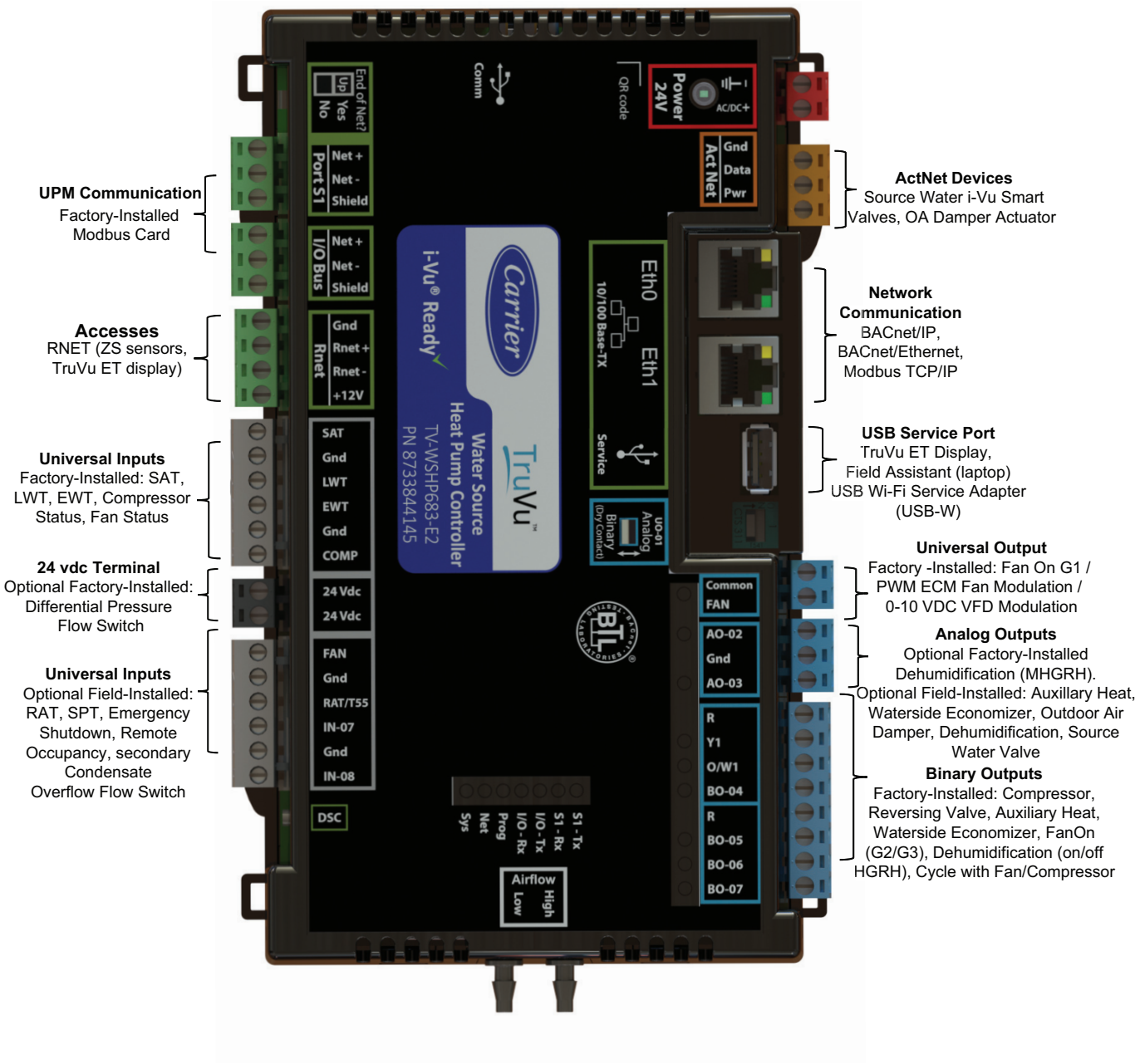

Fig. 63 — TruVu™ Controller Board

Sequence of Operation for Units with SCU Open Controller (VAV Units ONLY)

The SCU Open controller is an integrated component of the Carrier Indoor self-contained unit. The controller utilizes the

Carrier UC Open XP and UC Open XP IO expander hardware. Its internal application programming can be configured to operate the indoor self-contained unit as a single-zone unit for space temperature control or as a multi-zone variable air volume unit air source (MZ-VAV). The SCU Open controller allows the unit to operate within the Carrier i-Vu Open network, enabling air and water side linkage or as a standalone unit with monitoring/control from a third-party BACnet building automation system (BAS). Carrier's i-Vu user interface Equipment Touch™ or System Touch™ and the Field Assistant technician tool can be used with the SCU Open controller. Access is available via the local access port or the Rnet communication network.

All 50VQP units include a unit protection module (UPM) which implements all the unit primary safeties. The SCU Open interfaces with the UPM. For details on the UPM sequence of operation see the UPM section of the installation manual.

For complete details on Carrier SCU Open controller please refer to the latest SCU Open Controls, Start-Up, Operation, and Troubleshooting manual.

NOTE: 50VQP units utilize face split air coils and should not be operated below 50% of the rated air flow to prevent coil freezing.

SERVICE

Perform the procedures outlined below periodically, as indicated.

An annual "checkup" is recommended by a licensed refrigeration mechanic. Recording the performance measurements of volts, amps, and water temperature differences (both heating and cooling) is recommended. This data should be compared to the information on the unit's data plate and the data taken at the original startup of the equipment.

Periodic lockouts almost always are caused by air or water flow problems. The lockout (shutdown) of the unit is a normal protective measure in the design of the equipment. If continual lockouts occur call a qualified technician immediately and have them check for water flow problems, water temperature problems, airflow problems or air temperature problems. Use of the pressure and temperature charts for the unit may be required to properly determine the cause.

JOBSITE CHECK

Checks to the area

Prior to beginning work on systems containing flammable refrigerants, safety checks are necessary to ensure the risk of ignition is minimized. For repair to the refrigerating system the following precautions shall be completed prior to conducting work on the system.

Work procedure

Work shall be undertaken under a controlled procedure to minimize the risk of a flammable gas or vapor being present while the work is being performed.

General work area

All maintenance staff and others working in the local area shall be instructed on the nature of work being carried out. Work in confined spaces shall be avoided.

Checking for presence of refrigerant

The area shall be checked with an appropriate refrigerant detector prior to and during work, to ensure the technician is aware of potentially toxic or flammable atmospheres. Ensure that the leak detection equipment being used is suitable for use with R-454B refrigerant (i.e., non-sparking, adequately sealed or intrinsically safe).

Presence of fire extinguisher

If any hot work is to be conducted on the refrigerating equipment or any associated parts, appropriate fire extinguishing equipment shall be available to hand. Have a dry powder or CO_2 fire extinguisher adjacent to the charging area.

No ignition sources

No person carrying out work in relation to a refrigerating system which involves exposing any pipe work shall use any sources of ignition in such a manner that it may lead to the risk of fire or explosion. All possible ignition sources, including cigarette smoking, should be kept sufficiently far away from the site of installation, repairing, removing and disposal, during which refrigerant can possibly be released to the possible ignition sources, including cigarette smoking, should be kept sufficiently far away from the site of installation, repairing, removing and disposal, during which refrigerant can possibly be released to the surrounding space. Prior to work taking place, the area around the equipment is to be surveyed to make sure that there are no flammable hazards or ignition risks. "No Smoking" signs shall be displayed.

Ventilated area

Ensure that the area is in the open or that it is adequately ventilated before breaking into the system or conducting any hot work. A degree of ventilation shall continue during the period that the work is carried out. The ventilation should safely disperse any released refrigerant and preferably expel it externally into the atmosphere.

⚠ CAUTION

To avoid the release of refrigerant into the atmosphere, the refrigerant circuit of this unit must only be serviced by technicians which meet local, state and federal proficiency requirements.

⚠ WARNING

To prevent injury or death due to electrical shock or contact with moving parts, lockout/tagout disconnect switch before servicing unit.

Filters

Filter changes or cleanings are required at regular intervals. The time period between filter changes will depend upon the type of environment the equipment is used in. In a single family home that is not under construction, changing or cleaning the filter every 60 days may be sufficient. In other applications such as motels, where daily vacuuming produces a large amount of lint, filter changes may need to be as frequent as biweekly. See Fig. 2-6 for replacement filter sizes.

IMPORTANT: Units should never be operated without a filter.

Water Coil

Keep all air out of the water coil. Check open loop systems to be sure the well head is not allowing air to infiltrate the water line. Always keep lines airtight.

Inspect heat exchangers regularly, and clean more frequently if the unit is located in a "dirty" environment. The heat exchanger should be kept full of water at all times. Open loop systems should have an inverted P trap placed in the discharge line to keep water in the heat exchanger during off cycles. Closed loop systems must have a minimum of 15 psig during the summer and 40 psig during the winter.

Check P trap frequently for proper operation.

IMPORTANT: To avoid fouled machinery and extensive unit clean-up, DO NOT operate units without filters in place. DO NOT use equipment as a temporary heat source during construction.

Condensate Drain Pans

The condensate drain should be checked annually by cleaning and flushing to ensure proper drainage.

Check condensate drain pans for algae growth twice a year. If algae growth is apparent, consult a water treatment specialist for proper chemical treatment. Applying an algaecide every 3 months will typically eliminate algae problems in most locations.

Refrigerant System

Verify air and water flow rates are at proper levels before servicing. To maintain sealed circuitry integrity, do not install service gauges unless unit operation appears abnormal.

Check to see that unit is within the superheat and subcooling temperature ranges. If the unit is not within these ranges, recover and reweigh in refrigerant charge.

IMPORTANT: All refrigerant discharged from this unit must be recovered without exception. Technicians must follow industry accepted guidelines and all local, state and federal statutes for the recovery and disposal of refrigerants.

Refrigerating Equipment

Where electrical components are being changed, they shall be fit for the purpose and to the correct specification. At all times the manufacturer's maintenance and service guidelines shall be followed.

The following checks shall be applied to installations using flammable refrigerants:

- The actual refrigerant charge is in accordance with the room size within which the refrigerant containing parts are installed.
- The ventilation machinery and outlets are operating adequately and are not obstructed.
- If an indirect refrigerating circuit is being used, the secondary circuit shall be checked for the presence of refrigerant.
- Marking to the equipment continues to be visible and legible. Markings and signs that are illegible shall be corrected.
- Refrigerant pipe or components are installed in a position where they are unlikely to be exposed to any substance which may corrode refrigerant containing components, unless the components are constructed of materials which are inherently resistant to being corroded or are suitably protected against being so corroded.

Detection of Flammable Refrigerants

Under no circumstances shall potential sources of ignition be used in the searching for or detection of refrigerant leaks. A halide torch (or any other detector using a naked flame) shall not be used.

The following leak detection methods are deemed acceptable for all refrigerant systems:

- Electronic leak detectors may be used to detect refrigerant leaks but, in the case of flammable refrigerants, the sensitivity may not be adequate, or may need re-calibration. (Detection equipment shall be calibrated in a refrigerant-free area.). Ensure that the detector is not a potential source of ignition and is suitable for the refrigerant used. Leak detection equipment shall be set at a percentage of the LFL gas (25% maximum) and it is confirmed.
- Leak detection fluids are also suitable for use with most refrigerants but the use of detergents containing chlorine shall be avoided as the chlorine may react with the refrigerant and corrode the copper pipe-work.

  NOTE: Examples of leak detection fluids are the bubble method and fluorescent dye method.

If a leak is suspected, all naked flames shall be removed/extinguished.

If a leakage of refrigerant is found which requires brazing, all of the refrigerant shall be recovered from the system, or isolated (by means of shut off valves) in a part of the system remote from the leak.

Compressor

Conduct annual amperage checks to ensure that amp draw is no more than 10% greater than indicated on the serial plate data.

IMPORTANT: When a compressor is removed from this unit, system refrigerant circuit oil will remain in the compressor. To avoid leakage of compressor oil, the refrigerant lines of the compressor must be sealed after it is removed.

Fan Motor Lubrication

The fan motor was properly lubricated at the time of manufacture. Lubricate the fan motor(s) with SAE-20 (Society of Automotive Engineers) non-detergent electric oil.

Fan Bearing Lubrication

Inspect the fan bearings for proper lubrication every 6 month or 2500 hours of operation, whichever comes first. Standard units have grease fittings on the fan shaft bearings, located on each side of the blower wheel. Lubricate bearings with a lithium-based grease (NLGI Grade 2).

Condensate Drain Cleaning

Clean the drain line and unit drain pan at the start of each cooling season. Check flow by pouring water into drain. Be sure trap is filled to maintain an air seal.

Air Coil Cleaning

Remove dirt and debris from evaporator coil as required by condition of the coil. Clean coil with a stiff brush, vacuum cleaner, or compressed air. Use a fin comb of the correct tooth spacing when straightening mashed or bent coil fins.

Condenser Cleaning

Water-cooled condensers may require cleaning of scale (water deposits) due to improperly maintained closed-loop water systems. Sludge build-up may need to be cleaned in an open water tower system due to induced contaminants.

Local water conditions may cause excessive fouling or pitting of tubes. Condenser tubes should therefore be cleaned at least once a year, or more often if the water is contaminated.

Proper water treatment can minimize tube fouling and pitting. If such conditions are anticipated, water treatment analysis is recommended. Refer to the Carrier System Design Manual, Part 5, for general water conditioning information.

⚠ CAUTION

Follow all safety codes. Wear safety glasses and rubber gloves when using inhibited hydrochloric acid solution. Observe and follow acid manufacturer's instructions. Failure to follow these safety precautions could result in personal injury or equipment or property damage.

Clean condensers with an inhibited hydrochloric acid solution. The acid can stain hands and clothing, damage concrete, and, without inhibitor, damage steel. Cover surroundings to guard against splashing. Vapors from vent pipe are not harmful, but take care to prevent liquid from being carried over by the gases.

Warm solution acts faster, but cold solution is just as effective if applied for a longer period.

GRAVITY FLOW METHOD

Do not add solution faster than vent can exhaust the generated gases.

When condenser is full, allow solution to remain overnight, then drain condenser and flush with clean water. Follow acid manufacturer's instructions. See Fig. 64.

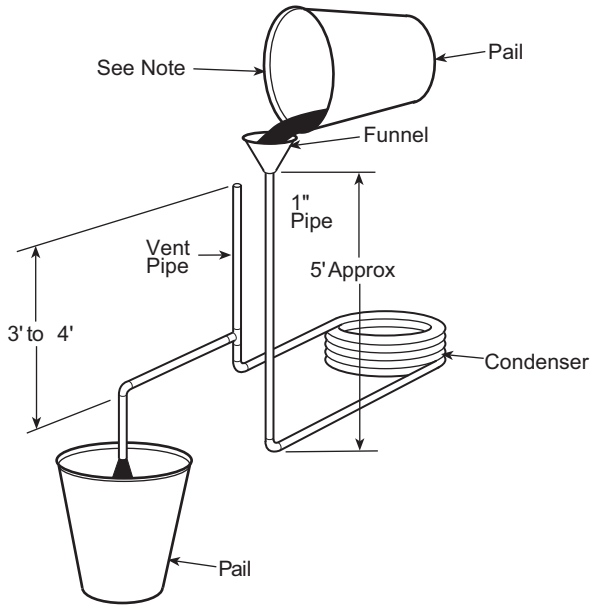

NOTE: Fill condenser with cleaning solution. Do not add solution more rapidly than vent can exhaust gases caused by chemical action.

Fig. 64 — Gravity Flow Method

FORCED CIRCULATION METHOD

Fully open vent pipe when filling condenser. The vent may be closed when condenser is full and pump is operating. See Fig. 65.

Regulate flow to condenser with a supply line valve. If pump is a non-overloading type, the valve may be fully closed while pump is running.

For average scale deposit, allow solution to remain in condenser overnight. For heavy scale deposit, allow 24 hours. Drain condenser and flush with clean water. Follow acid manufacturer's instructions.

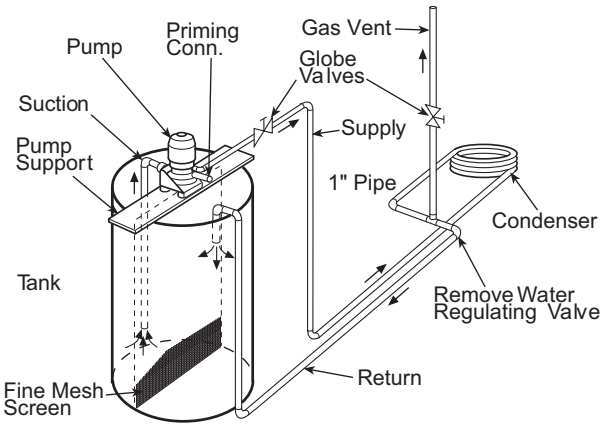

Fig. 65 — Forced Circulation Method

Checking System Charge

Units are shipped with full operating charge. If recharging is necessary:

1. Insert thermometer bulb in insulating rubber sleeve on liquid line near filter drier. Use a digital thermometer for all temperature measurements. DO NOT use a mercury or dial-type thermometer.
2. Connect pressure gauge to discharge line near compressor.
3. After unit conditions have stabilized, read head pressure on discharge line gauge.

   NOTE: Operate unit a minimum of 15 minutes before checking charge.
4. From standard field-supplied Pressure-Temperature chart for R-454B, find equivalent saturated condensing temperature.
5. Read liquid line temperature on thermometer; then subtract from saturated condensing temperature. The difference equals subcooling temperature.
6. Compare the subcooling temperature with the normal temperature. If the measured liquid line temperature does not agree with the required liquid line temperature, ADD refrigerant to raise the temperature or REMOVE refrigerant (using standard practices) to lower the temperature (allow a tolerance of ± 3°F).

Refrigerant Charging

⚠ WARNING

To prevent personal injury, wear safety glasses and gloves when handling refrigerant. Do not overcharge system — this can cause compressor flooding.

NOTE: Do not vent or depressurize unit refrigerant to atmosphere. Remove and recover refrigerant following accepted practices.

CHARGING PROCEDURES

In addition to conventional charging procedures, the following requirements shall be followed.

- Ensure that contamination of different refrigerants does not occur when using charging equipment.
- Hoses or lines shall be as short as possible to minimize the amount of refrigerant contained in them.
- Cylinders shall be kept in an appropriate position according to the instructions.
- Ensure that the refrigerating system is earthed prior to charging the system with refrigerant.
- Label the system when charging is complete (if not already).
- Extreme care shall be taken not to overfill the refrigerating system.

Prior to recharging the system, it shall be pressure-tested with the appropriate purging gas. The system shall be leak-tested on completion of charging but prior to commissioning. A follow up leak test shall be carried out prior to leaving the site.

RECOVERY

When removing refrigerant from a system, either for servicing or decommissioning, it is recommended good practice that all refrigerants are removed safely.

When transferring refrigerant into cylinders, ensure that only appropriate refrigerant recovery cylinders are employed. Ensure that the correct number of cylinders for holding the total system charge is available. All cylinders to be used are designated for the recovered refrigerant and labeled for that refrigerant (e.g., special cylinders for the recovery of refrigerant). Cylinders shall be complete with pressure-relief valve and associated shut-off valves in good

working order. Empty recovery cylinders are evacuated and, if possible, cooled before recovery occurs.

The recovery equipment shall be in good working order with a set of instructions concerning the equipment that is at hand and shall be suitable for the recovery of the flammable refrigerant. If in doubt, the manufacturer should be consulted. In addition, a set of calibrated weighing scales shall be available and in good working order. Hoses shall be complete with leak-free disconnect couplings and in good condition.

The recovered refrigerant shall be processed according to local legislation in the correct recovery cylinder, and the relevant waste transfer note arranged. Do not mix refrigerants in recovery units and especially not in cylinders.

If compressors or compressor oils are to be removed, ensure that they have been evacuated to an acceptable level to make certain that flammable refrigerant does not remain within the lubricant. The compressor body shall not be heated by an open flame or other ignition sources to accelerate this process. When oil is drained from a system, it shall be carried out safely.

REMOVAL AND EVACUATION

When breaking into the refrigerant circuit to make repairs – or for any other purpose – conventional procedures shall be used. However, for flammable refrigerants it is important that best practice be followed, since flammability is a consideration. The following procedure shall be adhered to:

- safely remove refrigerant following local and national regulations;
- evacuate;
- purge the circuit with inert gas (optional for A2L);
- evacuate (optional for A2L);
- continuously flush or purge with inert gas when using flame to open circuit; and
- open the circuit.

The refrigerant charge shall be recovered into the correct recovery cylinders if venting is not allowed by local and national codes. For appliances containing flammable refrigerants, the system shall be purged with oxygen-free nitrogen to render the appliance safe for flammable refrigerants. This process might need to be repeated several times. Compressed air or oxygen shall not be used for purging refrigerant systems.

For appliances containing flammable refrigerants, refrigerant purging shall be achieved by breaking the vacuum in the system with oxygen-free nitrogen and continuing to fill until the working pressure is achieved, then venting to atmosphere, and finally pulling down to a vacuum (optional for A2L). This process shall be repeated until no refrigerant is within the system (optional for A2L). When the final oxygen-free nitrogen charge is used, the system shall be vented down to atmospheric pressure to enable work to take place.

The outlet for the vacuum pump shall not be close to any potential ignition sources, and ventilation shall be available.

Air Coil Fan Motor Removal

⚠ CAUTION

Before attempting to remove fan motors or motor mounts, place a piece of plywood over evaporator coils to prevent coil damage.

Motor power wires need to be disconnected from motor terminals before motor is removed from unit.

1. Shut off unit main power supply.
2. Loosen bolts on mounting bracket so that fan belt can be removed.
3. Loosen and remove the 2 motor mounting bracket bolts on left side of bracket.
4. Slide motor/bracket assembly to extreme right and lift out through space between fan scroll and side frame. Rest motor on a high platform such as a step ladder. Do not allow motor to hang by its power wires.

TROUBLESHOOTING

When troubleshooting problems with a WSHP, consider the following and see Table 32:

UNIT PROTECTION MODULE (UPM)

All Carrier WSHPS are equipped with a 24V low voltage control circuit. Units are selectable to be provided with no controls for control via a field installed thermostat or 3rd party DDC or to be provided with a factory installed Carrier i-Vu DDC for advanced equipment control and monitoring. Regardless of the selection all units will be equipped with a unit protection module. The UPM board should be one of the first areas to start with troubleshooting an equipment issue. (See Fig. 54.) Refer to Step 10 — Configure Unit Control Components on page 56 for UPM configuration and Alarms.

Thermostatic Expansion Valves

Thermostatic expansion valves (TXV) are used as a means of metering the refrigerant through the evaporator to achieve a preset superheat at the TXV sensing bulb. Correct superheat of the refrigerant is important for the most efficient operation of the unit and for the life of the compressor.

Packaged heat pumps typically use one bi-flow TXV to meter refrigerant in both modes of operation. When diagnosing possible TXV problems it may be helpful to reverse the refrigerant flow to assist with the diagnosis.

Geothermal and water source heat pumps are designed to operate through a wide range of entering-water temperatures that will have a direct effect on the unit refrigerant operating pressures. Therefore, diagnosing TXV problems can be difficult.

TXV FAILURE

The most common failure mode of a TXV is when the valve fails while closed. Typically, a TXV uses spring pressure to close the valve and an opposing pressure, usually from a diaphragm, to open the valve. The amount of pressure exerted by the diaphragm will vary, depending on the pressure inside of the sensing bulb. As the temperature of and pressure within the bulb decreases, the valve will modulate closed and restrict the refrigerant flow through the valve. The result is less refrigerant in the evaporator and an increase in the superheat. As the temperature at the bulb increases the diaphragm pressure will increase, which opens the valve and allows more refrigerant flow and a reduction in the superheat.

If the sensing bulb, connecting capillary, or diaphragm assembly are damaged, pressure is lost and the spring will force the valve to a closed position. Often, the TXV will not close completely so some refrigerant flow will remain, even if there is inadequate flow for the heat pump to operate.

The TXV sensing bulb must be properly located, secured, and insulated as it will attempt to control the temperature of the line to which it is connected. The sensing bulb must be located on a dedicated suction line close to the compressor. On a packaged heat pump, the bulb may be located almost any place on the tube running from the compressor suction inlet to the reversing valve. If the bulb is located on a horizontal section, it should be placed in the 10:00 or 2:00 position for optimal performance.

⚠ CAUTION

Use caution when tightening the strap. The strap must be tight enough to hold the bulb securely but caution must be taken not to over-tighten the strap, which could dent, bend, collapse or otherwise damage the bulb.

The bulb must be secured to the pipe using a copper strap. The use of heat transfer paste between the bulb and the pipe will also help ensure optimum performance.

The bulb must also be properly insulated to eliminate any influence on valve operation by the surrounding conditions. Cork tape is the recommended insulation as it can be molded tight to the bulb to prevent air infiltration.

Causes of TXV Failure

The most common causes of TXV failure are:

1. A cracked, broken, or damaged sensing bulb or capillary can be caused by excessive vibration of the capillary during shipping or unit operation. If the sensing bulb is damaged or if the capillary is cracked or broken, the valve will be considered failed and must be replaced. Replacement of the TXV "power head" or sensing bulb, capillary, diaphragm assembly is possible on some TXVs. The power head assembly screws onto most valves, but not all are intended to be replaceable. If the assembly is not replaceable, replace the entire valve.
2. Particulate debris within the system can be caused by several sources including contaminated components, tubing, and service tools, or improper techniques used during brazing operations and component replacement. Problems associated with particulate debris can be compounded by refrigerant systems that use POE (polyolester oil). POE oil has solvent-like properties that will clean the interior surfaces of tubing and components. Particulates can be released from interior surfaces and may migrate to the TXV strainer, which can lead to plugging of the strainer.
3. Corrosive debris within the system may happen after a failure, such as a compressor burn out, if system was not properly cleaned.
4. Non-condensables may be present in the system. Non-condensables includes any substance other than the refrigerant or oil such as air, nitrogen, or water. Contamination can be the result of improper service techniques, use of contaminated components, and/or improper evacuation of the system.

Symptoms

The symptoms of a failed TXV can be varied and will include one or more of the following:

1. Low refrigerant suction pressure.
2. High refrigerant superheat.
3. High refrigerant subcooling.
4. TXV and/or low pressure tubing frosting.
5. Equalizer line condensing and at a lower temperature than the suction line or the equalizer line frosting.
6. FP1 faults in the heating mode in combination with any of the symptoms listed above.
7. FP2 faults in the cooling mode in combination with any of the symptoms listed above. Some symptoms can mimic a failed TXV but may actually be caused be another problem.

Before conducting an analysis for a failed TXV the following must be verified:

1. Confirm that there is proper water flow and water temperature in the heating mode.
2. Confirm that there is proper airflow and temperature in the cooling mode.
3. Ensure coaxial water coil is clean on the inside; this applies to the heating mode and may require a scale check.
4. Refrigerant may be undercharged. To verify, subcooling and superheat calculations may be required.

Diagnostics

Several tests may be required to determine if a TXV has failed. The following tools may be required for testing:

1. Refrigerant gauge manifold compatible with the refrigerant in the system.
2. Digital thermometer, preferably insulated, with wire leads that can be connected directly to the tubing.
3. Refrigerant pressure-temperature chart for the refrigerant used.

To determine that a TXV has failed, verify the following:

1. The suction pressure is low and the valve is non-responsive.
2. The TXV sensing bulb can be removed from the suction line and warmed by holding the bulb in your hand. This action should result in an increase in the suction pressure while the compressor is operating. The sensing bulb can also be chilled by immersion in ice water, which should result in a decrease in the suction pressure while the compressor is operating. No change in the suction pressure would indicate a non-responsive valve.
3. Simultaneous LOW suction pressure, HIGH refrigerant subcooling and HIGH superheat.
4. LOW suction pressure, LOW subcooling and HIGH superheat may indicate an undercharge of refrigerant. HIGH subcooling and LOW superheat may indicate an overcharge of refrigerant. The suction pressure will usually be normal or high if there is an overcharge of refrigerant.
5. LOW suction pressure and frosting of the valve and/or equalizer line may indicate a failed valve. However, these symptoms may also indicate an undercharge of refrigerant. Calculate the subcooling and superheat to verify a failed valve or refrigerant charge issue.

Repair

See Fig. 66 for typical refrigerant diagram to aid in service and repair of the unit.

⚠ WARNING

Most TXVs are designed for a fixed superheat setting and are therefore considered non-adjustable. Removal of the bottom cap will not provide access for adjustment and can lead to damage to the valve or equipment, unintended venting of refrigerant, personal injury, or possibly death.

⚠ CAUTION

Always recover the refrigerant from the system with suitable approved tools, recovery equipment, and practices prior to attempting to remove or repair any TXV.

IMPORTANT: Repair of any sealed refrigerant system requires training in the use of refrigeration tools and procedures. Repair should only be attempted by a qualified service technician. A universal refrigerant handling certificate will be required. Local and/or state license or certificate may also be required.

⚠ CAUTION

Disconnect power from unit before removing or replacing connectors, or servicing motor. Wait 5 minutes after disconnecting power before opening motor.

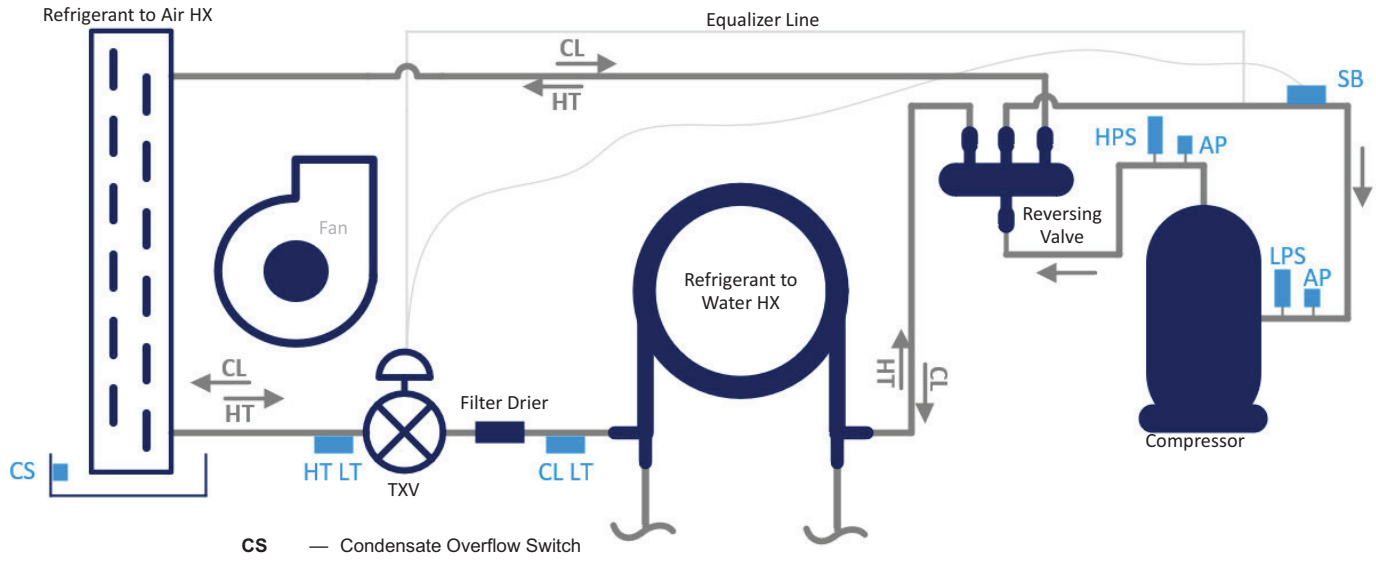

LEGEND

AP — Access Port
CL LT — Cooling Liquid Line Temperature / Water Side Freeze 1
HT LT — Heating Liquid Line Temperature / Air Coil Freeze 2
HPS — High Pressure Switch
LPS — Low Pressure Switch
SB — TXV Sensing Bulb

NOTE(S):
1. Filter Drier only present on units equipped with scroll compressor 2 tons and up.
2. All Pilot and Equalizer Lines 1/4" OD.

Fig. 66 — Typical Refrigerant Diagram

Table 32 — Troubleshooting

PROBLEM	POSSIBLE CAUSE	SOLUTION
Entire Unit Does Not Run	Power Supply Off	Apply power, close disconnect
	Blown Fuse	Replace fuse or reset circuit breaker. Check for correct fuses.
	Voltage Supply Low	If voltage is below minimum voltage specified on unit data plate, contact local power company.
	Thermostat	Set the fan to “ON”, the fan should run. Set thermostat to “COOL” and lowest temperature setting, the unit should run in the cooling mode (reversing valve energized). Set unit to “HEAT” and the highest temperature setting, the unit should run in the heating mode. If neither the blower or compressor run in all three cases, the thermostat could be mis-wired or faulty.To ensure mis-wired or faulty thermostat verify 24 volts is available on the condensing section low voltage terminal strip between “R” and “C”, “Y” and “C”, and “O” and “C”. If the blower does not operate, verify 24 volts between terminals “G” and “C” in the air handler. Replace the thermostat if defective.
Blower Operates but Compressor Does Not	Thermostat	Check setting, calibration, and wiring.
	Wiring	Check for loose or broken wires at compressor, capacitor, or contactor.
	Safety Controls	Check UPM board red default LED for Blink Code
	Compressor Overload Open	If the compressor is cool and the overload will not reset, replace compressor. Check the resistance of the compressor windings using the values shown in the compressor characteristics chart (Table 33).
	Compressor Motor Grounded	Internal winding grounded to the compressor shell. Replace compressor. If compressor burnout, install suction filter drier. Check the resistance of the compressor windings using the values shown in the compressor characteristics chart (Table 33).
	Compressor Windings Open	After compressor has cooled, check continuity of the compressor windings. If the windings are open, replace the compressor. Check the resistance of the compressor windings using the values shown in the compressor characteristics chart (Table 33).
Unit Off On High Pressure Control	Discharge Pressure Too High	In “COOLING” mode: Lack of or inadequate water flow. Entering water temperature too warm. Scaled or plugged condenser. In “HEATING” mode: Lack of or inadequate airflow. Blower inoperative, clogged filter or restrictions in ductwork.
	Refrigerant Charge	The unit is overcharged with refrigerant. Recover refrigerant, evacuate and recharge with factory recommended charge.
	High Pressure	Check for defective or improperly calibrated high pressure switch.
Unit Off On Low Pressure Control	Suction Pressure Too Low	In “COOLING” mode: Lack of or inadequate air flow. Entering air temperature too cold. Blower inoperative, clogged filter, or restrictions in ductwork. In “HEATING” mode: Lack of or inadequate water flow. Entering water temperature too cold. Scaled or plugged condenser.
	Refrigerant Charge	The unit is low on refrigerant. Check for refrigerant leak, repair, evacuate and recharge with factory recommended charge.
	Low Pressure Switch	Check for defective or improperly calibrated low-pressure switch.
Unit Short Cycles	Unit Oversized	Recalculate heating and or cooling loads.
	Thermostat	Thermostat installed near a supply air grille, relocate thermostat. Readjust heat anticipator.
	Wiring and Controls	Loose connections in the wiring or a defective compressor contactor.
Insufficient Cooling or Heating	Unit Undersized	Recalculate heating and or cooling loads. If excessive, possibly adding insulation and shading will rectify the problem.
	Loss of Conditioned Air by Leaks	Check for leaks in ductwork or introduction of ambient air through doors or windows.
	Airflow	Lack of adequate airflow or improper distribution of air. Replace dirty filter.
	Refrigerant Charge	Low on refrigerant charge causing inefficient operation.
	Compressor	Check for defective compressor. If discharge is too low and suction pressure is too high, compressor is not pumping properly. Replace compressor.
	Reversing Valve	Defective reversing valve creating bypass of refrigerant from discharge to suction side of compressor. Replace reversing valve.
	Operating Pressures	Compare unit operating pressures to the pressure / temperature chart for the unit.
	TXV/Capillary Tube	Check for possible restriction or defect. Replace if necessary.
	Moisture, Non-Condensables	The refrigerant system may be contaminated with moisture or non-condensables. Recover refrigerant, evacuate and recharge with factory recommended charge. Note: a liquid line drier may be required.

LEGEND

LED — Light Emitting Diode
TXV — Thermostatic Expansion Valve

Table 33 — Compressor Characteristics

SIZES	VOLTAGE	COLD WINDING RESISTANCE VALUES			RUN CAPACITOR (µF/V)
		Single Phase R-C	Single Phase S-C	Three Phase ± 7% Line-Line	
072	208/230-1-60	0.72	1.43	—	40 / 370
	208/230-3-60	—	—	0.98	—
	460-3-60	—	—	4.27	—
096	208/230-1-60	0.46	1.30	—	45 / 370
	208/230-3-60	—	—	T1-T2 0.796, T2-T3 0.975, T3-T1 0.796	—
	460-3-60	—	—	T1-T2 3.52, T2-T3 4.32, T3-T1 3.52	—
	575-3-60	—	—	5.61	—
120	208/230-1-60	0.36	0.73	—	70 / 370
	208/230-3-60	—	—	T1-T2 0.629, T2-T3 0.772, T3-T1 0.629	—
	460-3-60	—	—	3.44	—
	575-3-60	—	—	T1-T2 4.91, T2-T3 3.75, T3-T1 4.91	—
150	208/230-3-60	—	—	0.54	—
	460-3-60	—	—	2.16	—
	575-3-60	—	—	T1-T2 4.91, T2-T3 3.75, T3-T1 4.91	—
151	208/230-3-60	—	—	0.54	—
	460-3-60	—	—	2.13	—
	575-3-60	—	—	T1-T2 4.91, T2-T3 3.75, T3-T1 4.91	—
180	208/230-3-60	—	—	T1-T2 0.646, T2-T3 0.532, T3-T1 0.532	—
	460-3-60	—	—	T1-T2 2.806, T2-T3 2.272, T3-T1 2.272	—
	575-3-60	—	—	3.56	—
181	208/230-3-60	—	—	T1-T2 0.646, T2-T3 0.532, T3-T1 0.532	—
	460-3-60	—	—	T1-T2 2.806, T2-T3 2.272, T3-T1 2.272	—
	575-3-60	—	—	3.56	—
210	208/230-3-60	—	—	0.37	—
	460-3-60	—	—	T1-T2 1.726, T2-T3 1.320, T3-T1 1.726	—
	575-3-60	—	—	2.76	—
240	208/230-3-60	—	—	0.33	—
	460-3-60	—	—	T1-T2 1.704, T2-T3 1.380, T3-T1 1.380	—
	575-3-60	—	—	2.33	—
242	208/230-3-60	—	—	0.33	—
	460-3-60	—	—	T1-T2 1.704, T2-T3 1.380, T3-T1 1.380	—
	575-3-60	—	—	2.33	—
300	208/230-3-60	—	—	0.27	—
	460-3-60	—	—	1.04	—
	575-3-60	—	—	1.69	—
360	208/230-3-60	—	—	0.18	—
	460-3-60	—	—	0.79	—
	575-3-60	—	—	1.38	—

© 2024 Carrier

Manufacturer reserves the right to discontinue, or change at any time, specifications or designs without notice and without incurring obligations.

Catalog No. 04-53500484-01 Printed in U.S.A. Form No. 50HQP-VQP-9SI Pg 90 9-24 Replaces: 50HQP-VQP-8SI

START-UP CHECKLIST

50HQP/50VQP

(Remove and use for job file)

NOTE: To avoid injury to personnel and damage to equipment or property when completing the procedures listed in this start-up checklist, use good judgment, follow safe practices, and adhere to the safety considerations/information as outlined in preceding sections of this Installation, Start-Up and Service Instructions.

I. PRELIMINARY INFORMATION

CUSTOMER: _____
JOB NAME: _____
MODEL NO.: _____
SERIAL NO.: _____
DATE: _____

II. PRE-START-UP

Does the unit voltage correspond with the supply voltage available? (Y/N) _____
Have the power and control wiring connections been made and terminals tight? (Y/N) _____
Have water connections been made and is fluid available at heat exchanger? (Y/N) _____
Has pump been turned on and are isolation valves open? (Y/N) _____
Has condensate connection been made and is a trap installed? (Y/N) _____
Is an air filter installed? (Y/N) _____

III. START-UP

Is fan operating when compressor operates? (Y/N) _____
If 3-phase scroll compressor is present, verify proper rotation per instructions. (Y/N) _____
Unit voltage — cooling operation:

Phase AB volts _____ (if 3 phase) Phase BC volts _____ (if 3 phase) Phase CA volts _____
Phase AB amps _____ (if 3 phase) Phase BC amps _____ (if 3 phase) Phase CA amps _____

CONTROL VOLTAGE

Is control voltage above 21.6 volts? (Y/N) _____
If not, check for proper transformer connection.

TEMPERATURES

Fill in the analysis chart attached.

Coaxial Heat Exchanger	Cooling Cycle: Fluid In _____ °F	Fluid Out _____ °F	_____ psi	_____ Flow		
	Heating Cycle: Fluid In _____ °F	Fluid Out _____ °F	_____ psi	_____ Flow		
Air Coil	Cooling Cycle: Air In _____ °F	Air Out _____ °F				
	Heating Cycle: Air In _____ °F	Air Out _____ °F				

Manufacturer reserves the right to discontinue, or change at any time, specifications or designs without notice and without incurring obligations.

HEATING CYCLE ANALYSIS

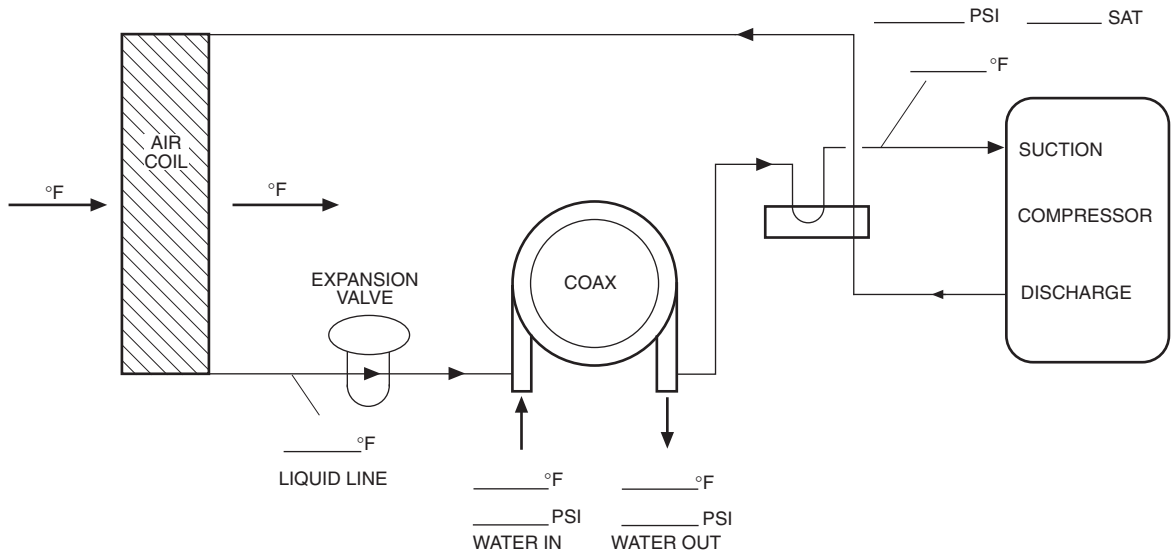

COOLING CYCLE ANALYSIS

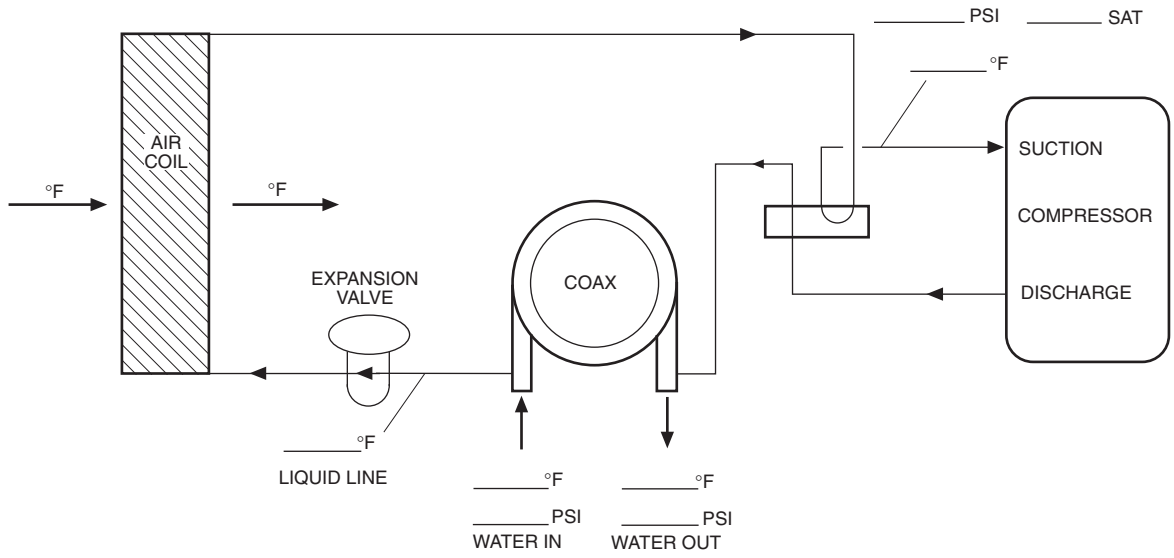

Heat of Extraction (absorption) or Heat of Rejection =
_____ Flow Rate (gpm) x _____ Temp. Diff. (°F) x _____ Fluid Factor* = _____(btu/hr)

Superheat = Suction Temperature – Suction Saturation Temperature = _____ (°F)

Subcooling = Discharge Saturation Temperature – Liquid Line Temperature = _____ (°F)

*Use 500 for water, 485 for antifreeze.

CUT ALONG DOTTED LINE

CUT ALONG DOTTED LINE

© 2024 Carrier

Manufacturer reserves the right to discontinue, or change at any time, specifications or designs without notice and without incurring obligations.

Catalog No. 04-53500484-01 Printed in U.S.A. Form No. 50HQP-VQP-9SI Pg CL-2 9-24 Replaces: 50HQP-VQP-8SI