19XR
Hermetic Centrifugal Liquid Chillers
50/60 Hz
With PIC II Controls and HFC-134a

Start-Up, Operation, and Maintenance Instructions

SAFETY CONSIDERATIONS

Centrifugal liquid chillers are designed to provide safe and reliable service when operated within design specifications. When operating this equipment, use good judgment and safety precautions to avoid damage to equipment and property or injury to personnel.

Be sure you understand and follow the procedures and safety precautions contained in the chiller instructions as well as those listed in this guide.

⚠ DANGER

DO NOT VENT refrigerant relief valves within a building. Outlet from rupture disc or relief valve must be vented outdoors in accordance with the latest edition of ANSI/ASHRAE 15 (American National Standards Institute/American Society of Heating, Refrigeration, and Air Conditioning Engineers). The accumulation of refrigerant in an enclosed space can displace oxygen and cause asphyxiation.

PROVIDE adequate ventilation in accordance with ANSI/ASHRAE 15, especially for enclosed and low overhead spaces. Inhalation of high concentrations of vapor is harmful and may cause heart irregularities, unconsciousness, or death. Misuse can be fatal. Vapor is heavier than air and reduces the amount of oxygen available for breathing. Product causes eye and skin irritation. Decomposition products are hazardous.

DO NOT USE OXYGEN to purge lines or to pressurize a chiller for any purpose. Oxygen gas reacts violently with oil, grease, and other common substances.

NEVER EXCEED specified test pressures, VERIFY the allowable test pressure by checking the instruction literature and the design pressures on the equipment nameplate.

DO NOT USE air for leak testing. Use only refrigerant or dry nitrogen.

DO NOT VALVE OFF any safety device.

BE SURE that all pressure relief devices are properly installed and functioning before operating any chiller.

RISK OF INJURY OR DEATH by electrocution. High voltage is present on motor leads even though the motor is not running when a solid-state or inside-delta mechanical starter is used. Open the power supply disconnect before touching motor leads or terminals.

⚠ WARNING

DO NOT WELD OR FLAMECUT any refrigerant line or vessel until all refrigerant *(liquid and vapor)* has been removed from chiller. Traces of vapor should be displaced with dry air or nitrogen and the work area should be well ventilated. *Refrigerant in contact with an open flame produces toxic gases.*

DO NOT USE eyebolts or eyebolt holes to rig chiller sections or the entire assembly.

DO NOT work on high-voltage equipment unless you are a qualified electrician.

DO NOT WORK ON electrical components, including control panels, switches, starters, or oil heater until you are sure ALL POWER IS OFF and no residual voltage can leak from capacitors or solid-state components.

LOCK OPEN AND TAG electrical circuits during servicing. IF WORK IS INTERRUPTED, confirm that all circuits are deenergized before resuming work.

AVOID SPILLING liquid refrigerant on skin or getting it into the eyes. USE SAFETY GOGGLES. Wash any spills from the skin with soap and water. If liquid refrigerant enters the eyes, IMMEDIATELY FLUSH EYES with water and consult a physician.

NEVER APPLY an open flame or live steam to a refrigerant cylinder. Dangerous over pressure can result. When it is necessary to heat refrigerant, use only warm (110 F [43 C]) water.

DO NOT REUSE disposable (nonreturnable) cylinders or attempt to refill them. It is DANGEROUS AND ILLEGAL. When cylinder is emptied, evacuate remaining gas pressure, loosen the collar and unscrew and discard the valve stem. DO NOT INCINERATE.

CHECK THE REFRIGERANT TYPE before adding refrigerant to the chiller. The introduction of the wrong refrigerant can cause damage or malfunction to this chiller.

Operation of this equipment with refrigerants other than those cited herein should comply with ANSI/ASHRAE15 (latest edition). Contact Carrier for further information on use of this chiller with other refrigerants.

DO NOT ATTEMPT TO REMOVE fittings, covers, etc., while chiller is under pressure or while chiller is running. Be sure pressure is at 0 psig (0 kPa) before breaking any refrigerant connection.

CAREFULLY INSPECT all relief devices, rupture discs, and other relief devices AT LEAST ONCE A YEAR. If chiller operates in a corrosive atmosphere, inspect the devices at more frequent intervals.

DO NOT ATTEMPT TO REPAIR OR RECONDITION any relief device when corrosion or build-up of foreign material (rust, dirt, scale, etc.) is found within the valve body or mechanism. Replace the device.

DO NOT install relief devices in series or backwards.

USE CARE when working near or in line with a compressed spring. Sudden release of the spring can cause it and objects in its path to act as projectiles.

⚠ CAUTION

DO NOT STEP on refrigerant lines. Broken lines can whip about and release refrigerant, causing personal injury.

DO NOT climb over a chiller. Use platform, catwalk, or staging. Follow safe practices when using ladders.

USE MECHANICAL EQUIPMENT (crane, hoist, etc.) to lift or move inspection covers or other heavy components. Even if components are light, use mechanical equipment when there is a risk of slipping or losing your balance.

BE AWARE that certain automatic start arrangements CAN ENGAGE THE STARTER, TOWER FAN, OR PUMPS. Open the disconnect *ahead of* the starter, tower fans, or pumps.

USE only repair or replacement parts that meet the code requirements of the original equipment.

DO NOT VENT OR DRAIN waterboxes containing industrial brines, liquid, gases, or semisolids without the permission of your process control group.

DO NOT LOOSEN waterbox cover bolts until the waterbox has been completely drained.

DOUBLE-CHECK that coupling nut wrenches, dial indicators, or other items have been removed before rotating any shafts.

DO NOT LOOSEN a packing gland nut before checking that the nut has a positive thread engagement.

PERIODICALLY INSPECT all valves, fittings, and piping for corrosion, rust, leaks, or damage.

PROVIDE A DRAIN connection in the vent line near each pressure relief device to prevent a build-up of condensate or rain water.

Manufacturer reserves the right to discontinue, or change at any time, specifications or designs without notice and without incurring obligations.

CONTENTS

Page

SAFETY CONSIDERATIONS 1
INTRODUCTION 4
ABBREVIATIONS AND EXPLANATIONS 4
CHILLER FAMILIARIZATION 5-7
Chiller Information Plate 5
System Components 5
Cooler 5
Condenser 5
Motor-Compressor 5
Control Panel 5
Factory-Mounted Starter (Optional) 7
Storage Vessel (Optional) 7
REFRIGERATION CYCLE 7
MOTOR AND LUBRICATING OIL COOLING CYCLE 7,8
LUBRICATION CYCLE 8
Summary 8
Details 8
Oil Reclaim System 8
• PRIMARY OIL RECOVERY MODE
• SECONDARY OIL RECOVERY METHOD
STARTING EQUIPMENT 8-10
Unit-Mounted Solid-State Starter (Optional) 9
Unit-Mounted Wye-Delta Starter (Optional) 10
CONTROLS 10-43
Definitions 10
• ANALOG SIGNAL
• DISCRETE SIGNAL
General 10
PIC II System Components 10
• CHILLER VISUAL CONTROLLER (CVC)
• INTEGRATED STARTER MODULE (ISM)
• CHILLER CONTROL MODULE (CCM)
• OIL HEATER CONTACTOR (1C)
• OIL PUMP CONTACTOR (2C)
• HOT GAS BYPASS CONTACTOR RELAY (3C) (Optional)
• CONTROL TRANSFORMERS (T1, T2)
CVC Operation and Menus 14
• GENERAL
• ALARMS AND ALERTS
• CVC MENU ITEMS
• BASIC CVC OPERATIONS (Using the Softkeys)
• TO VIEW STATUS
• OVERRIDE OPERATIONS
• TIME SCHEDULE OPERATION
• TO VIEW AND CHANGE SET POINTS
• SERVICE OPERATION
PIC II System Functions 32
• CAPACITY CONTROL
• ECW CONTROL OPTION
• CONTROL POINT DEADBAND
• DIFFUSER CONTROL
• PROPORTIONAL BANDS AND GAIN
• DEMAND LIMITING
• CHILLER TIMERS
• OCCUPANCY SCHEDULE
Safety Controls 33
Shunt Trip (Option) 35
Default Screen Freeze 35
Ramp Loading 35
Capacity Override 35
High Discharge Temperature Control 35
Oil Sump Temperature Control 35

Page

Oil Cooler 36
Remote Start/Stop Controls 36
Spare Safety Inputs 36
Spare Safety Alarm Contacts 36
Refrigerant Leak Detector 36
Condenser Pump Control 36
Condenser Freeze Prevention 37
Tower Fan Relay Low and High 37
Auto. Restart After Power Failure 37
Water/Brine Reset 37
• RESET TYPE 1
• RESET TYPE 2
• RESET TYPE 3
Demand Limit Control Option 38
Surge Prevention Algorithm 38
Surge Protection 39
Lead/Lag Control 39
• COMMON POINT SENSOR INSTALLATION
• CHILLER COMMUNICATION WIRING
• LEAD/LAG OPERATION
• FAULTED CHILLER OPERATION
• LOAD BALANCING
• AUTO. RESTART AFTER POWER FAILURE
Ice Build Control 41
• ICE BUILD INITIATION
• START-UP/RECYCLE OPERATION
• TEMPERATURE CONTROL DURING ICE BUILD
• TERMINATION OF ICE BUILD
• RETURN TO NON-ICE BUILD OPERATIONS
Attach to Network Device Control 42
• ATTACHING TO OTHER CCN MODULES
Service Operation 43
• TO ACCESS THE SERVICE SCREENS
• TO LOG OUT OF NETWORK DEVICE
• HOLIDAY SCHEDULING
START-UP/SHUTDOWN/RECYCLE SEQUENCE 44,45
Local Start-Up 44
Shutdown Sequence 45
Automatic Soft Stop Amps Threshold 45
Chilled Water Recycle Mode 45
Safety Shutdown 45
BEFORE INITIAL START-UP 46-58
Job Data Required 46
Equipment Required 46
Using the Optional Storage Tank and Pumpout System 46
Remove Shipping Packaging 46
Open Oil Circuit Valves 46
Tighten All Gasketed Joints and Guide Vane Shaft Packing 46
Check Chiller Tightness 46
Refrigerant Tracer 46
Leak Test Chiller 48
Standing Vacuum Test 48
Chiller Dehydration 51
Inspect Water Piping 51
Check Optional Pumpout Compressor Water Piping 51
Check Relief Valves 51
Inspect Wiring 51
Carrier Comfort Network Interface 52
Check Starter 52
• MECHANICAL STARTER
• BENSHAW, INC. REDISTART MICRO SOLID-STATE STARTER
Oil Charge 53

CONTENTS (cont)

Page

Power Up the Controls and Check the Oil Heater 53
• SOFTWARE VERSION
Software Configuration 53
Input the Design Set Points 53
Input the Local Occupied Schedule (OCCPC01S) 53
Input Service Configurations 53
• PASSWORD
• INPUT TIME AND DATE
• CHANGE CVC CONFIGURATION IF NECESSARY
• TO CHANGE THE PASSWORD
• TO CHANGE THE CVC DISPLAY FROM ENGLISH TO METRIC UNITS
• MODIFY CONTROLLER IDENTIFICATION IF NECESSARY
• INPUT EQUIPMENT SERVICE PARAMETERS IF NECESSARY
• CONFIGURE DIFFUSER CONTROL IF NECESSARY
• MODIFY EQUIPMENT CONFIGURATION IF NECESSARY
Perform a Control Test 56
Check Optional Pumpout System Controls and Compressor 56
High Altitude Locations 56
Charge Refrigerant Into Chiller 56
• CHILLER EQUALIZATION WITHOUT A PUMPOUT UNIT
• CHILLER EQUALIZATION WITH PUMPOUT UNIT
• TRIMMING REFRIGERANT CHARGE

INITIAL START-UP 58,59
Preparation 58
Dry Run to Test Start-Up Sequence 58
Check Motor Rotation 58
• IF THE MOTOR ROTATION IS CLOCKWISE
• IF THE MOTOR ROTATION IS NOT CLOCKWISE
Check Oil Pressure and Compressor Stop 59
To Prevent Accidental Start-Up 59
Check Chiller Operating Condition 59
Instruct the Customer Operator 59
• COOLER-CONDENSER
• OPTIONAL PUMPOUT STORAGE TANK AND PUMPOUT SYSTEM
• MOTOR COMPRESSOR ASSEMBLY
• MOTOR COMPRESSOR LUBRICATION SYSTEM
• CONTROL SYSTEM
• AUXILIARY EQUIPMENT
• DESCRIBE CHILLER CYCLES
• REVIEW MAINTENANCE
• SAFETY DEVICES AND PROCEDURES
• CHECK OPERATOR KNOWLEDGE
• REVIEW THE START-UP, OPERATION, AND MAINTENANCE MANUAL

OPERATING INSTRUCTIONS 59-61
Operator Duties 59
Prepare the Chiller for Start-Up 59
To Start the Chiller 59
Check the Running System 59
To Stop the Chiller 60
After Limited Shutdown 60
Preparation for Extended Shutdown 60

Page

After Extended Shutdown 60
Cold Weather Operation 60
Manual Guide Vane Operation 60
Refrigeration Log 60

PUMPOUT AND REFRIGERANT TRANSFER PROCEDURES 62-64
Preparation 62
Operating the Optional Pumpout Unit 62
• TO READ REFRIGERANT PRESSURES
Chillers with Storage Tanks 63
• TRANSFER REFRIGERANT FROM PUMPOUT STORAGE TANK TO CHILLER
• TRANSFER THE REFRIGERANT FROM CHILLER TO PUMPOUT STORAGE TANK
Chillers with Isolation Valves 64
• TRANSFER ALL REFRIGERANT TO CHILLER CONDENSER VESSEL
• TRANSFER ALL REFRIGERANT TO CHILLER COOLER VESSEL
• RETURN CHILLER TO NORMAL OPERATING CONDITIONS

GENERAL MAINTENANCE 65,66
Refrigerant Properties 65
Adding Refrigerant 65
Removing Refrigerant 65
Adjusting the Refrigerant Charge 65
Refrigerant Leak Testing 65
Leak Rate 65
Test After Service, Repair, or Major Leak 65
• REFRIGERANT TRACER
• TO PRESSURIZE WITH DRY NITROGEN
Repair the Leak, Retest, and Apply Standing Vacuum Test 65
Checking Guide Vane Linkage 65
Trim Refrigerant Charge 65

WEEKLY MAINTENANCE 66
Check the Lubrication System 66

SCHEDULED MAINTENANCE 66-69
Service Ontime 66
Inspect the Control Panel 66
Check Safety and Operating Controls Monthly 66
Changing Oil Filter 66
Oil Specification 67
Oil Changes 67
• TO CHANGE THE OIL
Refrigerant Filter 67
Oil Reclaim Filter 67
Inspect Refrigerant Float System 67
Inspect Relief Valves and Piping 67
Compressor Bearing and Gear Maintenance 67
Inspect the Heat Exchanger Tubes and Flow Devices 68
• COOLER AND FLOW DEVICES
• CONDENSER AND FLOW DEVICES
Water Leaks 68
Water Treatment 68
Inspect the Starting Equipment 68
Check Pressure Transducers 68
Optional Pumpout System Maintenance 68
• OPTIONAL PUMPOUT COMPRESSOR OIL CHARGE
• OPTIONAL PUMPOUT SAFETY CONTROL SETTINGS
Ordering Replacement Chiller Parts 69

CONTENTS (cont)

Page

TROUBLESHOOTING GUIDE 69-99
Overview 69
Checking the Display Messages 69
Checking Temperature Sensors 69
• RESISTANCE CHECK
• VOLTAGE DROP
• CHECK SENSOR ACCURACY
• DUAL TEMPERATURE SENSORS
Checking Pressure Transducers 70
• COOLER AND CONDENSER PRESSURE TRANSDUCER AND WATERSIDE FLOW DEVICE CALIBRATION
• TRANSDUCER REPLACEMENT
Control Algorithms Checkout Procedure 70
Control Test 71
Control Modules 80
• RED LED (Labeled as STAT)
• GREEN LED (Labeled as COM)

Page

Notes on Module Operation 80
Chiller Control Module (CCM) 81
• INPUTS
• OUTPUTS
ISM Integrated Starter Module 81
• INPUTS
• OUTPUTS
Replacing Defective Processor Modules 81
• INSTALLATION
Solid-State Starters 81
• TESTING SILICON CONTROL RECTIFIERS IN BENSHAW, INC. SOLID-STATE STARTERS
• SCR REMOVAL/INSTALLATION
Physical Data 84
INDEX 100,101
INITIAL START-UP CHECKLIST FOR 19XR HERMETIC CENTRIFUGAL LIQUID CHILLER . . . . . CL-1 to CL-12

INTRODUCTION

Prior to initial start-up of the 19XR unit, those involved in the start-up, operation, and maintenance should be thoroughly familiar with these instructions and other necessary job data. This book is outlined to familiarize those involved in the start-up, operation and maintenance of the unit with the control system before performing start-up procedures. Procedures in this manual are arranged in the sequence required for proper chiller start-up and operation.

⚠ WARNING

This unit uses a microprocessor control system. Do not short or jumper between terminations on circuit boards or modules; control or board failure may result.

Be aware of electrostatic discharge (static electricity) when handling or making contact with circuit boards or module connections. Always touch a chassis (grounded) part to dissipate body electrostatic charge before working inside control center.

Use extreme care when handling tools near boards and when connecting or disconnecting terminal plugs. Circuit boards can easily be damaged. Always hold boards by the edges and avoid touching components and connections.

This equipment uses, and can radiate, radio frequency energy. If not installed and used in accordance with the instruction manual, it may cause interference to radio communications. It has been tested and found to comply with the limits for a Class A computing device pursuant to Subpart J of Part 15 of FCC Rules, which are designed to provide reasonable protection against such interference when operated in a commercial environment. Operation of this equipment in a residential area is likely to cause interference, in which case the user, at his own expense, will be required to take whatever measures may be required to correct the interference.

Always store and transport replacement or defective boards in anti-static shipping bag.

ABBREVIATIONS AND EXPLANATIONS

Frequently used abbreviations in this manual include:

CCM	—	Chiller Control Module
CCN	—	Carrier Comfort Network
CVC	—	Chiller Visual Control
CCW	—	Counterclockwise
CW	—	Clockwise
ECDW	—	Entering Condenser Water
ECW	—	Entering Chilled Water
EMS	—	Energy Management System
HGBP	—	Hot Gas Bypass
I/O	—	Input/Output
ISM	—	Integrated Starter Module
LCD	—	Liquid Crystal Display
LCDW	—	Leaving Condenser Water
LCW	—	Leaving Chilled Water
LED	—	Light-Emitting Diode
OLTA	—	Overload Trip Amps
PIC II	—	Product Integrated Control II
RLA	—	Rated Load Amps
SCR	—	Silicon Controlled Rectifier
SI	—	International System of Units
TXV	—	Thermostatic Expansion Valve

Words printed in all capital letters or in italics may be viewed on the Chiller Visual Control (CVC) (e.g., LOCAL, CCN, ALARM, etc.).

Words printed in *both* all capital letters and italics can also be viewed on the CVC and are parameters (e.g., *CONTROL MODE, COMPRESSOR START RELAY, ICE BUILD OPTION*, etc.) with associated values (e.g., modes, temperatures, percentages, pressures, on, off, etc.).

Words printed in all capital letters and in a box represent softkeys on the CVC control panel (e.g., ENTER, EXIT, INCREASE, QUIT, etc.).

Factory-installed additional components are referred to as options in this manual; factory-supplied but field-installed additional components are referred to as accessories.

The chiller software part number of the 19XR unit is located on the back of the CVC.

CHILLER FAMILIARIZATION (Fig. 1 and 2)

Chiller Information Plate — The information plate is located on the right side of the chiller control panel.

System Components — The components include the cooler and condenser heat exchangers in separate vessels, motor-compressor, lubrication package, control panel, and motor starter. All connections from pressure vessels have external threads to enable each component to be pressure tested with a threaded pipe cap during factory assembly.

Cooler — This vessel (also known as the evaporator) is located underneath the compressor. The cooler is maintained at lower temperature/pressure so evaporating refrigerant can remove heat from water flowing through its internal tubes.

Condenser — The condenser operates at a higher temperature/pressure than the cooler and has water flowing through its internal tubes in order to remove heat from the refrigerant.

Motor-Compressor — This component maintains system temperature and pressure differences and moves the heat-carrying refrigerant from the cooler to the condenser.

Control Panel — The control panel is the user interface for controlling the chiller. It regulates the chiller's capacity as required to maintain proper leaving chilled water temperature. The control panel:

- registers cooler, condenser, and lubricating system pressures
- shows chiller operating condition and alarm shutdown conditions
- records the total chiller operating hours
- sequences chiller start, stop, and recycle under microprocessor control
- displays status of motor starter
- provides access to other CCN (Carrier Comfort Network) devices

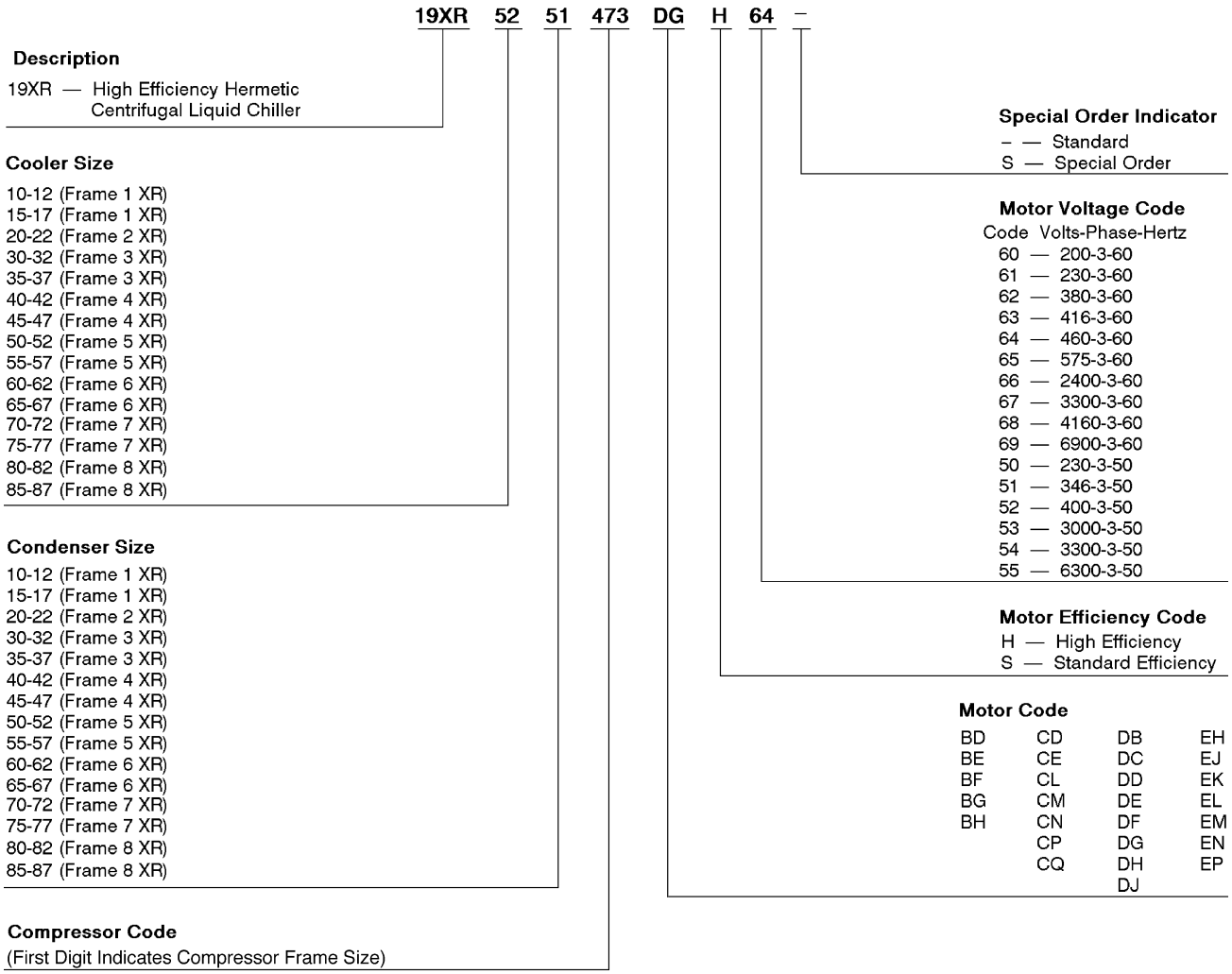

Fig. 1 — 19XR Identification

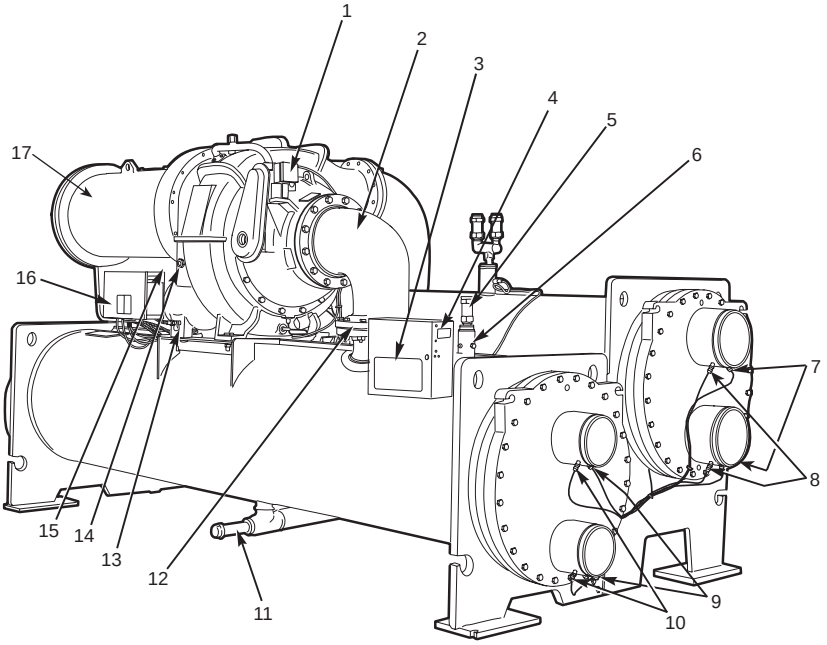

FRONT VIEW

LEGEND

1 — Guide Vane Actuator
2 — Suction Elbow
3 — Chiller Visual Control (CVC)
4 — Chiller Identification Nameplate
5 — Cooler, Auto Reset Relief Valves
6 — Cooler Pressure Transducer
7 — Condenser In/Out Temperature Thermistors
8 — Condenser Waterflow Device
9 — Cooler In/Out Temperature Thermistors
10 — Cooler Waterflow Device
11 — Refrigerant Charging Valve
12 — Typical Flange Connection
13 — Oil Drain Charging Valve
14 — Oil Level Sight Glasses
15 — Refrigerant Oil Cooler (Hidden)
16 — Auxiliary Power Panel
17 — Motor Housing

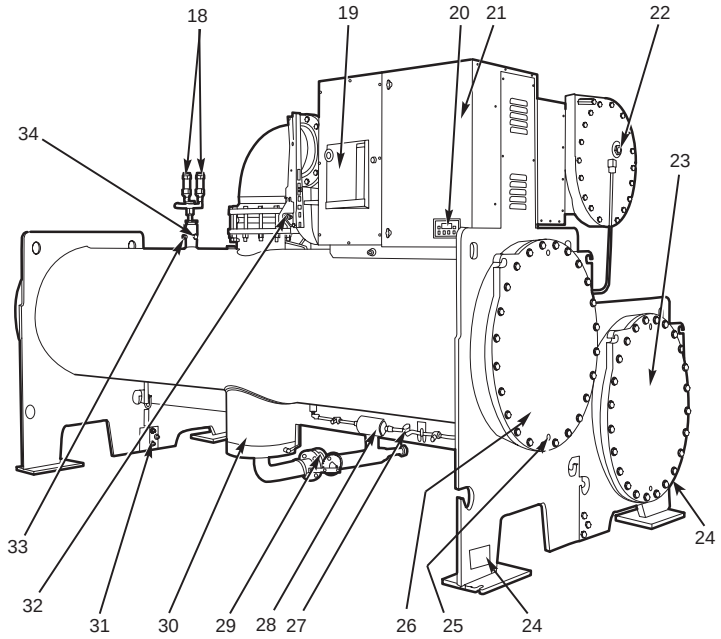

REAR VIEW

LEGEND

18 — Condenser Auto. Reset Relief Valves
19 — Motor Circuit Breaker
20 — Solid-State Starter Control Display
21 — Unit-Mounted Starter (Optional), Solid-State Starter Shown
22 — Motor Sight Glass
23 — Cooler Return-End Waterbox Cover
24 — ASME Nameplate (One Hidden)
25 — Typical Waterbox Drain Port
26 — Condenser Return-End Waterbox Cover
27 — Refrigerant Moisture/Flow Indicator
28 — Refrigerant Filter/Drier
29 — Liquid Line Isolation Valve (Optional)
30 — Linear Float Valve Chamber
31 — Vessel Take-Apart Connector
32 — Discharge Isolation Valve (Optional)
33 — Pumpout Valve
34 — Condenser Pressure Transducer

Fig. 2 — Typical 19XR Components

Factory-Mounted Starter (Optional) — The starter allows for the proper start and disconnect of electrical energy for the compressor-motor, oil pump, oil heater, and control panel.

Storage Vessel (Optional) — There are 2 sizes of storage vessels available. The vessels have double relief valves, a magnetically-coupled dial-type refrigerant level gage, a one-inch FPT drain valve, and a ½-in. male flare vapor connection for the pumpout unit.

NOTE: If a storage vessel is not used at the jobsite, factory-installed isolation valves on the chiller may be used to isolate the chiller charge in either the cooler or condenser. An optional pumpout system is used to transfer refrigerant from vessel to vessel.

REFRIGERATION CYCLE

The compressor continuously draws refrigerant vapor from the cooler at a rate set by the amount of guide vane opening. As the compressor suction reduces the pressure in the cooler, the remaining refrigerant boils at a fairly low temperature (typically 38 to 42 F [3 to 6 C]). The energy required for boiling is obtained from the water flowing through the cooler tubes. With heat energy removed, the water becomes cold enough to use in an air conditioning circuit or for process liquid cooling.

After taking heat from the water, the refrigerant vapor is compressed. Compression adds still more heat energy, and the refrigerant is quite warm (typically 98 to 102 F [37 to 40 C]) when it is discharged from the compressor into the condenser.

Relatively cool (typically 65 to 90 F [18 to 32 C]) water flowing into the condenser tubes removes heat from the refrigerant and the vapor condenses to liquid.

The liquid refrigerant passes through orifices into the FLASC (Flash Subcooler) chamber (Fig. 3). Since the FLASC chamber is at a lower pressure, part of the liquid refrigerant flashes to vapor, thereby cooling the remaining liquid. The FLASC vapor is recondensed on the tubes which are cooled by entering condenser water. The liquid drains into a float chamber between the FLASC chamber and cooler. Here a float valve forms a liquid seal to keep FLASC chamber vapor from entering the cooler. When liquid refrigerant passes through the valve, some of it flashes to vapor in the reduced pressure on the cooler side. In flashing, it removes heat from the remaining liquid. The refrigerant is now at a temperature and pressure at which the cycle began.

MOTOR AND LUBRICATING OIL COOLING CYCLE

The motor and the lubricating oil are cooled by liquid refrigerant taken from the bottom of the condenser vessel (Fig. 3). Refrigerant flow is maintained by the pressure differential that exists due to compressor operation. After the refrigerant flows past an isolation valve, an in-line filter, and a sight glass/moisture indicator, the flow is split between the motor cooling and oil cooling systems.

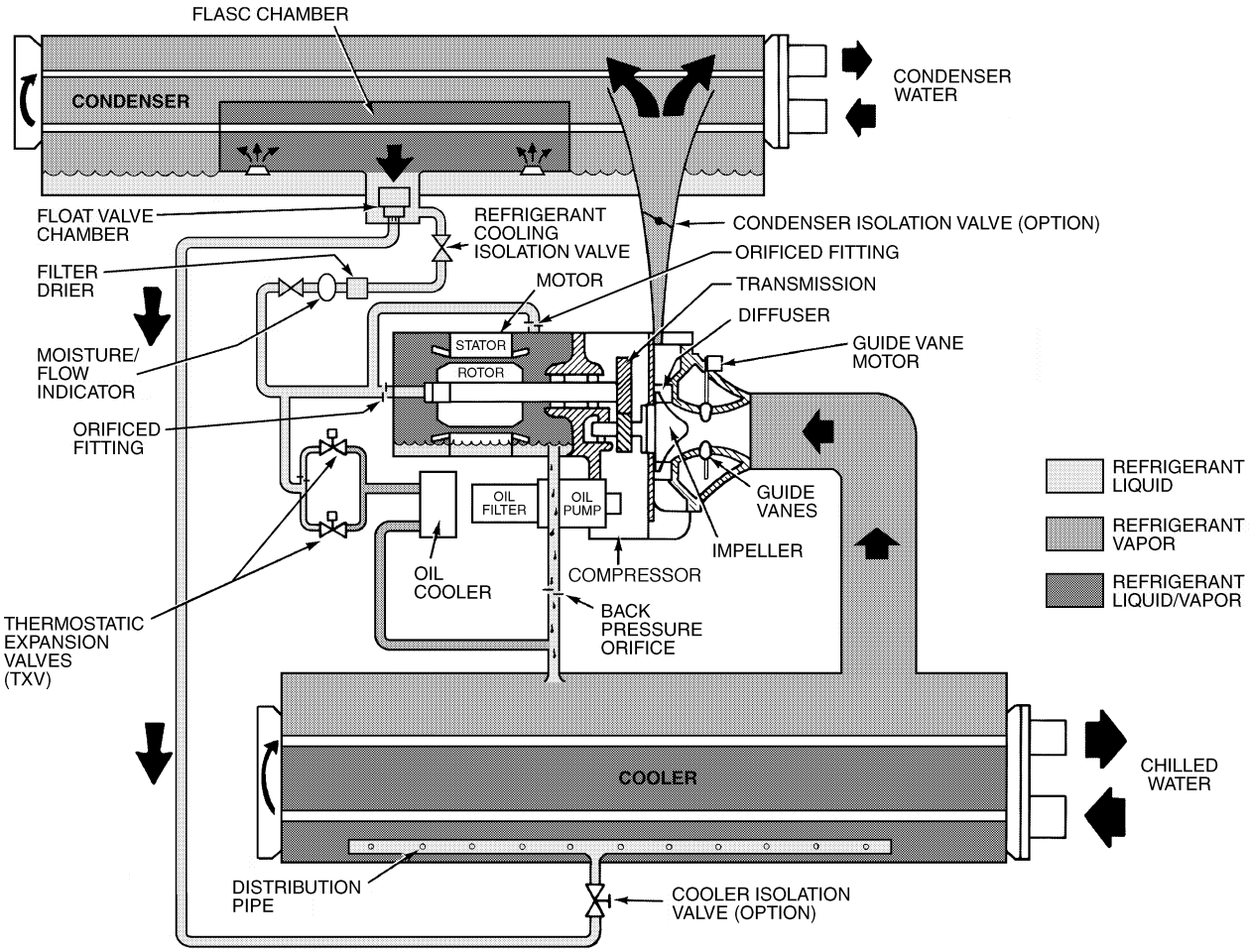

Fig. 3 — Refrigerant Motor Cooling and Oil Cooling Cycles

Flow to the motor cooling system passes through an orifice and into the motor. Once past the orifice, the refrigerant is directed over the motor by a spray nozzle. The refrigerant collects in the bottom of the motor casing and is then drained back into the cooler through the motor refrigerant drain line. A back pressure valve or an orifice in this line maintains a higher pressure in the motor shell than in the cooler/oil sump. The motor is protected by a temperature sensor imbedded in the stator windings. An increase in motor winding temperature past the motor override set point overrides the temperature capacity control to hold, and if the motor temperature rises 10° F (5.5° C) above this set point, closes the inlet guide vanes. If the temperature rises above the safety limit, the compressor shuts down.

Refrigerant that flows to the oil cooling system is regulated by thermostatic expansion valves (TXVs). The TXVs regulate flow into the oil/refrigerant plate and frame-type heat exchanger (the oil cooler in Fig. 3). The expansion valve bulbs control oil temperature to the bearings. The refrigerant leaving the oil cooler heat exchanger then returns to the chiller cooler.

LUBRICATION CYCLE

Summary — The oil pump, oil filter, and oil cooler make up a package located partially in the transmission casting of the compressor-motor assembly. The oil is pumped into a filter assembly to remove foreign particles and is then forced into an oil cooler heat exchanger where the oil is cooled to proper operational temperatures. After the oil cooler, part of the flow is directed to the gears and the high speed shaft bearings; the remaining flow is directed to the motor shaft bearings. Oil drains into the transmission oil sump to complete the cycle (Fig. 4).

Details — Oil is charged into the lubrication system through a hand valve. Two sight glasses in the oil reservoir permit oil level observation. Normal oil level is between the middle of the upper sight glass and the top of the lower sight glass when the compressor is shut down. The oil level should be visible in at least one of the 2 sight glasses during operation. Oil sump temperature is displayed on the CVC (Chiller Visual Control) default screen. During compressor operation, the oil sump temperature ranges between 125 to 150 F (52 to 66 C).

The oil pump suction is fed from the oil reservoir. An oil pressure relief valve maintains 18 to 25 psid (124 to 172 kPad) differential pressure in the system at the pump discharge. This differential pressure can be read directly from the CVC default screen. The oil pump discharges oil to the oil filter assembly. This filter can be closed to permit removal of the filter without draining the entire oil system (see Maintenance sections, pages 65 to 69, for details). The oil is then piped to the oil cooler heat exchanger. The oil cooler uses refrigerant from the condenser as the coolant. The refrigerant cools the oil to a temperature between 120 and 140 F (49 to 60 C).

As the oil leaves the oil cooler, it passes the oil pressure transducer and the thermal bulb for the refrigerant expansion valve on the oil cooler. The oil is then divided. Part of the oil flows to the thrust bearing, forward pinion bearing, and gear spray. The rest of the oil lubricates the motor shaft bearings and the rear pinion bearing. The oil temperature is measured in the bearing housing as it leaves the thrust and forward journal bearings. The oil then drains into the oil reservoir at the base of the compressor. The PIC II (Product Integrated Control II) measures the temperature of the oil in the sump and maintains the temperature during shutdown (see Oil Sump Temperature Control section, page 35). This temperature is read on the CVC default screen.

During the chiller start-up, the PIC II energizes the oil pump and provides 45 seconds of prelubrication to the bearings after pressure is verified before starting the compressor. During shutdown, the oil pump will run for 60 seconds to post-lubricate after the compressor shuts down. The oil pump can also be energized for testing purposes during a Control Test.

Ramp loading can slow the rate of guide vane opening to minimize oil foaming at start-up. If the guide vanes open quickly, the sudden drop in suction pressure can cause any refrigerant in the oil to flash. The resulting oil foam cannot be pumped efficiently; therefore, oil pressure falls off and lubrication is poor. If oil pressure falls below 15 psid (103 kPad) differential, the PIC II will shut down the compressor.

If the controls are subject to a power failure that lasts more than 3 hours, the oil pump will be energized periodically when the power is restored. This helps to eliminate refrigerant that has migrated to the oil sump during the power failure. The controls energize the pump for 60 seconds every 30 minutes until the chiller is started.

Oil Reclaim System — The oil reclaim system returns oil lost from the compressor housing back to the oil reservoir by recovering the oil from 2 areas on the chiller. The guide vane housing is the primary area of recovery. Oil is also recovered by skimming it from the operating refrigerant level in the cooler vessel.

PRIMARY OIL RECOVERY MODE — Oil is normally recovered through the guide vane housing on the chiller. This is possible because oil is normally entrained with refrigerant in the chiller. As the compressor pulls the refrigerant up from the cooler into the guide vane housing to be compressed, the oil normally drops out at this point and falls to the bottom of the guide vane housing where it accumulates. Using discharge gas pressure to power an eductor, the oil is drawn from the housing and is discharged into the oil reservoir.

SECONDARY OIL RECOVERY METHOD — The secondary method of oil recovery is significant under light load conditions, when the refrigerant going up to the compressor suction does not have enough velocity in which to bring oil along. Under these conditions, oil collects in a greater concentration at the top level of the refrigerant in the cooler. This oil and refrigerant mixture is skimmed from the side of the cooler and is then drawn up to the guide vane housing. There is a filter in this line. Because the guide vane housing pressure is much lower than the cooler pressure, the refrigerant boils off, leaving the oil behind to be collected by the primary oil recovery method.

STARTING EQUIPMENT

The 19XR requires a motor starter to operate the centrifugal hermetic compressor motor, the oil pump, and various auxiliary equipment. The starter is the main field wiring interface for the contractor.

See Carrier Specification Z-415 for specific starter requirements. All starters must meet these specifications in order to properly start and satisfy mechanical safety requirements. Starters may be supplied as separate, free-standing units or may be mounted directly on the chiller (unit mounted) for low-voltage units only.

Three separate circuit breakers are inside the starter. Circuit breaker CB1 is the compressor motor circuit breaker. The disconnect switch on the starter front cover is connected to this breaker. Circuit breaker CB1 supplies power to the compressor motor.

⚠ WARNING

The main circuit breaker (CB1) on the front of the starter disconnects the main motor current only. Power is still energized for the other circuits. Two more circuit breakers inside the starter must be turned off to disconnect power to the oil pump, PIC II controls, and oil heater.

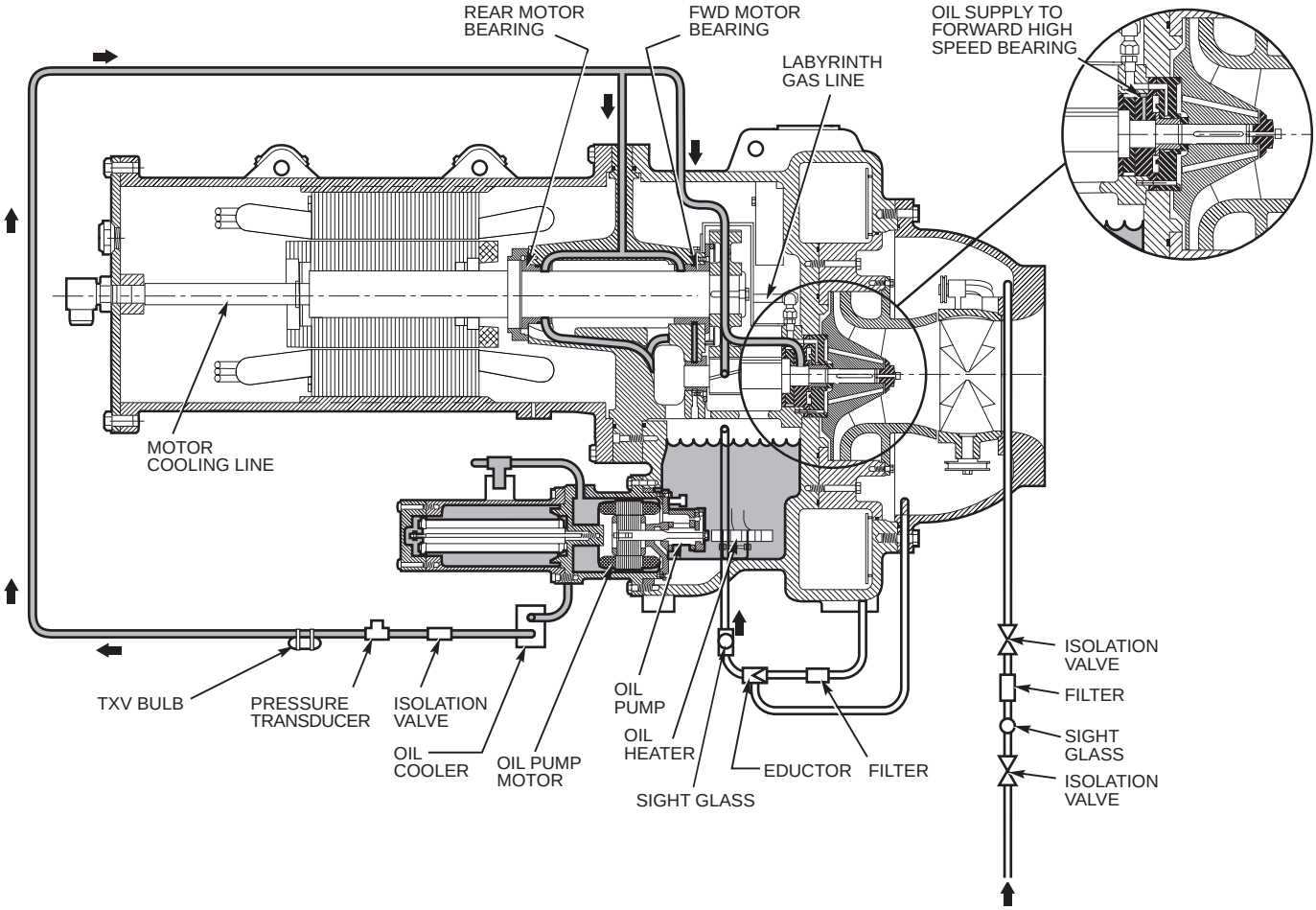

Fig. 4 — Lubrication System

Circuit breaker CB2 supplies power to the control panel, oil heater, and portions of the starter controls.

Circuit breaker CB3 supplies power to the oil pump. Both CB2 and CB3 are wired in parallel with CB1 so that power is supplied to them if the CB1 disconnect is open.

All starters must include a Carrier control module called the Integrated Starter Module (ISM), excluding the Benshaw solid-state starters. This module controls and monitors all aspects of the starter. See the Controls section on page 10 for additional ISM information. All starter replacement parts are supplied by the starter manufacturer excluding the ISM (contact Carrier's Replacement Component Division [RCD]).

Unit-Mounted Solid-State Starter (Optional) — The 19XR chiller may be equipped with a solid-state, reduced-voltage starter (Fig. 5 and 6). This starter's primary function is to provide on-off control of the compressor motor. This type of starter reduces the peak starting torque, reduces the motor inrush current, and decreases mechanical shock. This capability is summed up by the phrase ''soft starting.'' The solid-state starter is available as a 19XR option (factory supplied and installed). The solid-state starters manufacturer name is located inside the starter access door.

A solid-state, reduced-voltage starter operates by reducing the starting voltage. The starting torque of a motor at full voltage is typically 125% to 175% of the running torque. When the voltage and the current are reduced at start-up, the starting torque is reduced as well. The object is to reduce the starting voltage to just the voltage necessary to develop the torque required to get the motor moving. The voltage is reduced by silicon controlled rectifiers (SCRs). The voltage and current are then ramped up in a desired period of time. Once full voltage is reached, a bypass contactor is energized to bypass the SCRs.

⚠ WARNING

When voltage is supplied to the solid-state circuitry, the heat sinks in the starter as well as the wires leading to the motor and the motor terminal are at line voltage. Do not touch the heat sinks, power wiring, or motor terminals while voltage is present or serious injury will result.

There is a display on the front of the Benshaw, Inc., solid-state starters that is useful for troubleshooting and starter check-out. The display indicates:

- voltage to the SCRs
- SCR control voltage
- power indication
- proper phasing for rotation
- start circuit energized
- over-temperature
- ground fault
- current unbalance
- run state
- software configuration

The starter is further explained in the Check Starter and Troubleshooting Guide sections, pages 52 and 66.

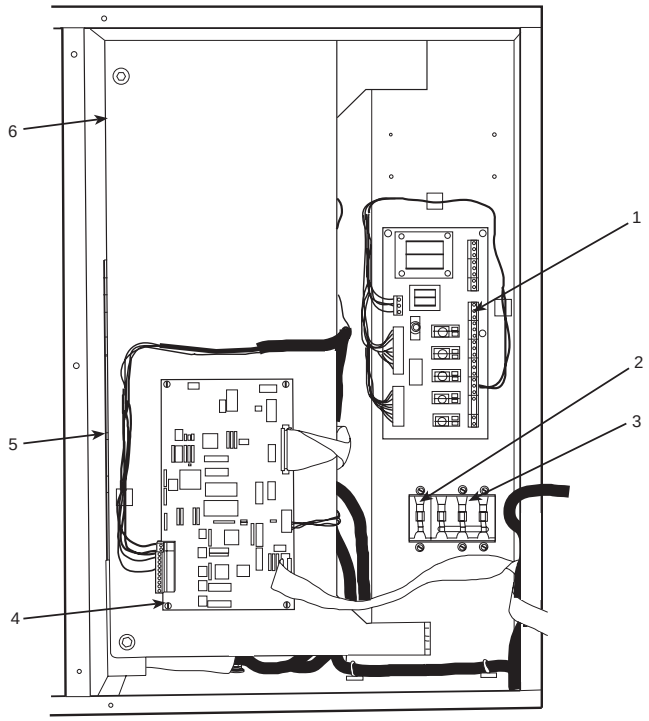

LEGEND

1 — Ready-Start Micro Input/Output Card
2 — Circuit Breaker 2 (CB2): Machine Control and Heater Power
3 — Circuit Breaker 3 (CB3): Oil Pump Power
4 — Ready-Start Micro Central Processing Unit Card (CPU)
5 — Restart Micro Power Card (hidden, not depicted)
6 — Restart Micro Bypass Card (hidden, not depicted)

Fig. 5 — Solid-State Starter Box, Internal View

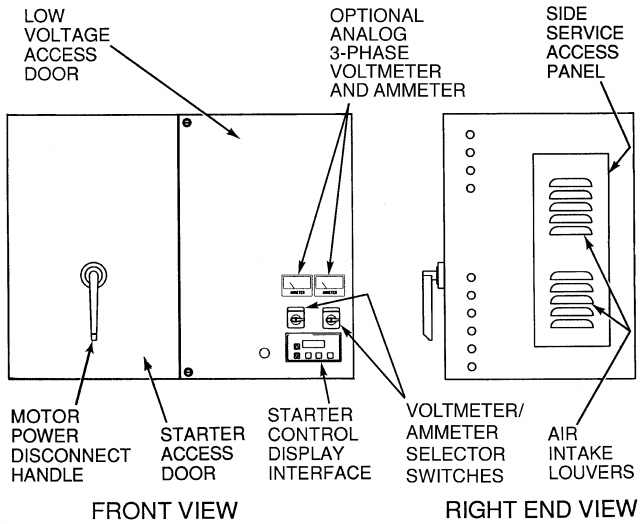

Fig. 6 — Typical Starter External View (Solid-State Starter Shown)

Unit-Mounted Wye-Delta Starter (Optional) — The 19XR chiller may be equipped with a wye-delta starter mounted on the unit. This starter is intended for use with low-voltage motors (under 600 v). It reduces the starting current inrush by connecting each phase of the motor windings into a wye configuration. This occurs during the starting period when the motor is accelerating up to speed. Once the motor is up to speed, the starter automatically connects the phase windings into a delta configuration. Starter control, monitoring, and motor protection is provided by Carrier's Integrated Starter Module (ISM).

CONTROLS

Definitions

ANALOG SIGNAL — *An analog signal* varies in proportion to the monitored source. It quantifies values between operating limits. (Example: A temperature sensor is an analog device because its resistance changes in proportion to the temperature, generating many values.)

DISCRETE SIGNAL — *A discrete signal* is a 2-position representation of the value of a monitored source. (Example: A switch produces a discrete signal indicating whether a value is above or below a set point or boundary by generating an on/off, high/low, or open/closed signal.)

General — The 19XR hermetic centrifugal liquid chiller contains a microprocessor-based control center that monitors and controls all operations of the chiller (see Fig. 7). The microprocessor control system matches the cooling capacity of the chiller to the cooling load while providing state-of-the-art chiller protection. The system controls cooling load within the set point plus the deadband by sensing the leaving chilled water or brine temperature and regulating the inlet guide vane via a mechanically-linked actuator motor. The guide vane is a variable flow pre-whirl assembly that controls the refrigeration effect in the cooler by regulating the amount of refrigerant vapor flow into the compressor. An increase in guide vane opening increases capacity. A decrease in guide vane opening decreases capacity. The microprocessor-based control center protects the chiller by monitoring the digital and analog inputs and executing capacity overrides or safety shutdowns, if required.

PIC II System Components — The chiller control system is called the PIC II (Product Integrated Control II). See Table 1. The PIC II controls the operation of the chiller by monitoring all operating conditions. The PIC II can diagnose a problem and let the operator know what the problem is and what to check. It promptly positions the guide vanes to maintain leaving chilled water temperature. It can interface with auxiliary equipment such as pumps and cooling tower fans to turn them on when required. It continually checks all safeties to prevent any unsafe operating condition. It also regulates the oil heater while the compressor is off and regulates the hot gas bypass valve, if installed. The PIC II controls provide critical protection for the compressor motor and controls the motor starter.

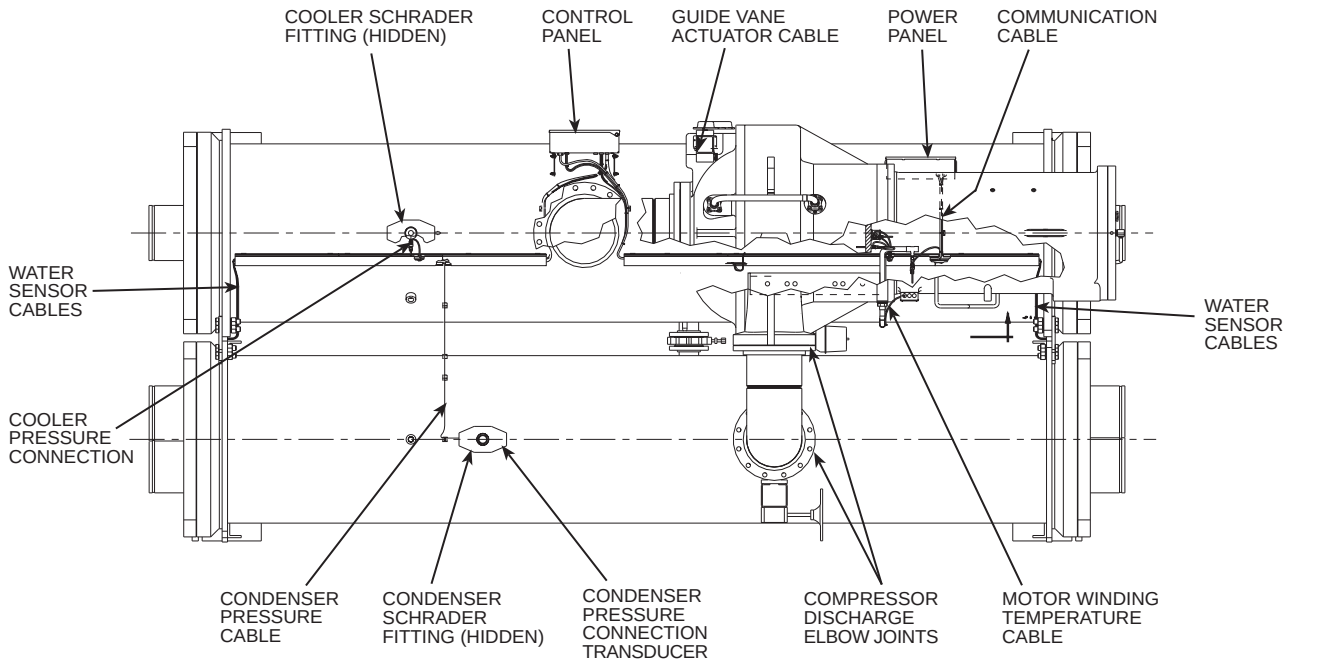

TOP VIEW

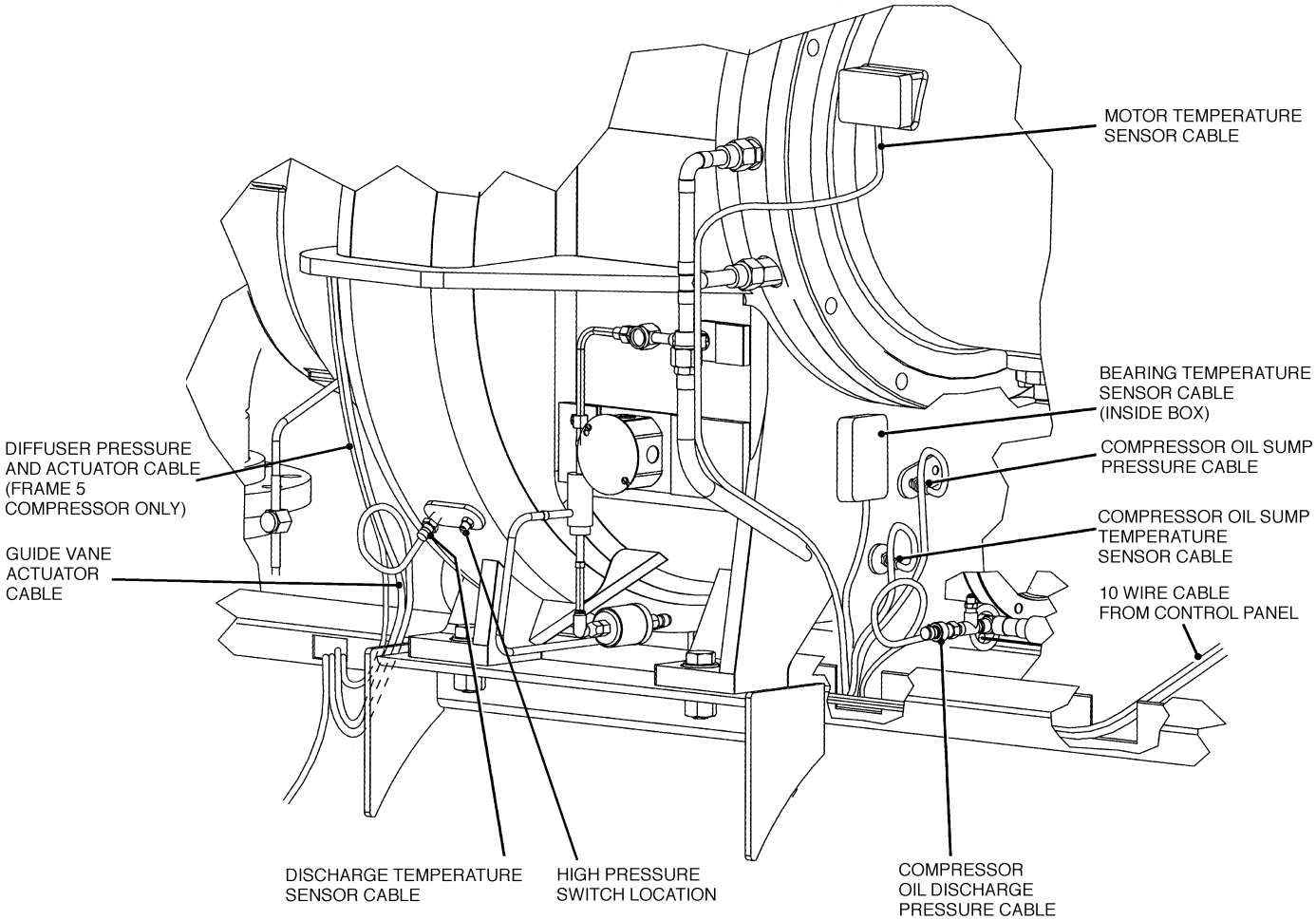

VIEW A — A (COMPRESSOR DETAIL)

Fig. 7 — 19XR Controls and Sensor Locations

The PIC II can interface with the Carrier Comfort Network (CCN) if desired. It can communicate with other PIC I or PIC II equipped chillers and other CCN devices.

The PIC II consists of 3 modules housed inside 3 major components. The component names and corresponding control voltages are listed below (also see Table 1):

- control panel
  — all extra low-voltage wiring (24 v or less)
- power panel
  — 230 or 115 v control voltage (per job requirement)
  — up to 600 v for oil pump power
- starter cabinet
  — chiller power wiring (per job requirement)

Table 1 — Major PIC Components and Panel Locations*

PIC II COMPONENT	PANEL LOCATION
Chiller Visual Controller (CVC) and Display	Control Panel
Integrated Starter Module (ISM)	Starter Cabinet
Chiller Control Module (CCM)	Control Panel
Oil Heater Contactor (1C)	Power Panel
Oil Pump Contactor (2C)	Power Panel
Hot Gas Bypass Relay (3C) (Optional)	Power Panel
Control Transformers (T1, T2)	Power Panel
Temperature Sensors	See Fig. 7.
Pressure Transducers	See Fig. 7.

*See Fig. 5 and Fig. 7-11.

CHILLER VISUAL CONTROLLER (CVC) — The CVC is the ‘‘brain’’ of the PIC II. This module contains all the operating software needed to control the chiller. The CVC is mounted to the control panel (Fig. 10) and is the input center for all local chiller set points, schedules, configurable functions, and options. The CVC has a stop button, an alarm light, four buttons for logic inputs, and a backlight display. The backlight will automatically turn off after 15 minutes of non-use. The functions of the four buttons or ‘‘softkeys’’ are menu driven and are shown on the display directly above the softkeys.

The viewing angle of the CVC can be adjusted for optimum viewing. Remove the 2 bolts connecting the control panel to the brackets attached to the cooler. Place them in one of the holes to pivot the control panel forward to backward to change the viewing angle. See Fig. 10. To change the contrast of the display, access the adjustment on the back of the CVC. See Fig. 10.

INTEGRATED STARTER MODULE (ISM) — This module is located in the starter cabinet. This module initiates commands from the CVC for starter functions such as starting and stopping the compressor, condenser, chilled water pumps, tower fan, spare alarm contacts, and the shunt trip. The ISM monitors starter inputs such as line voltage, motor current, ground fault, remote start contact, spare safety, condenser high pressure, oil pump interlock, starter 1M, and run contacts. The ISM contains logic capable of safety shutdown. It shuts down the chiller if communications with the CVC are lost.

CHILLER CONTROL MODULE (CCM) — This module is located in the control panel. The CCM provides the input and outputs necessary to control the chiller. This module monitors refrigerant pressure, entering and leaving water temperatures, and outputs control for the guide vane actuator, oil heaters, and oil pump. The CCM is the connection point for optional demand limit, chilled water reset, remote temperature reset, and refrigerant leak sensor.

OIL HEATER CONTACTOR (1C) — This contactor is located in the power panel (Fig. 11) and operates the heater at either 115 or 230 v. It is controlled by the PIC II to maintain oil temperature during chiller shutdown.

OIL PUMP CONTACTOR (2C) — This contactor is located in the power panel. It operates all 200 to 575-v oil pumps. The PIC II energizes the contactor to turn on the oil pump as necessary.

HOT GAS BYPASS CONTACTOR RELAY (3C) (Optional) — This relay, located in the power panel, controls the opening of the hot gas bypass valve. The PIC II energizes the relay during low load, high lift conditions.

CONTROL TRANSFORMERS (T1, T2) — These transformers convert incoming control voltage to 24 vac power for the 3 power panel contactor relays, CCM, and CVC.

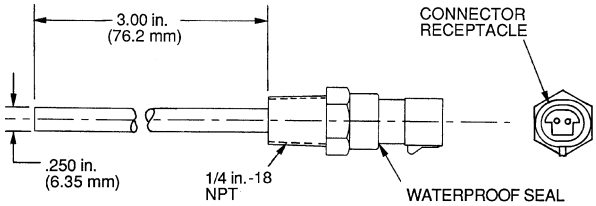

Fig. 8 — Control Sensors (Temperature)

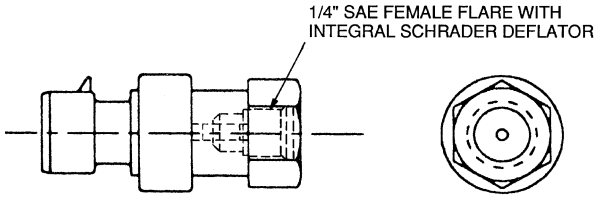

Fig. 9 — Control Sensors (Pressure Transducers, Typical)

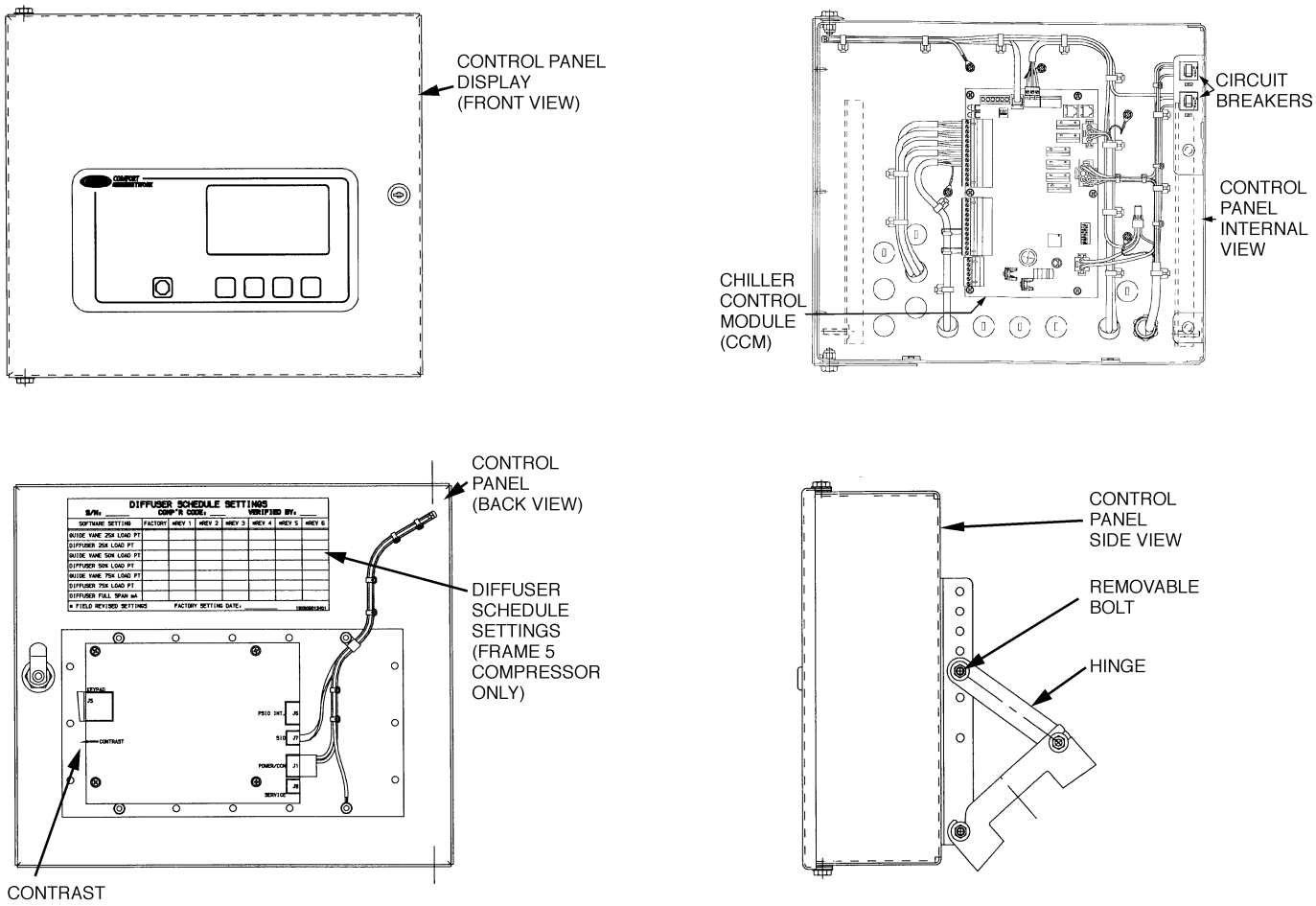

Fig. 10 — Control Panel

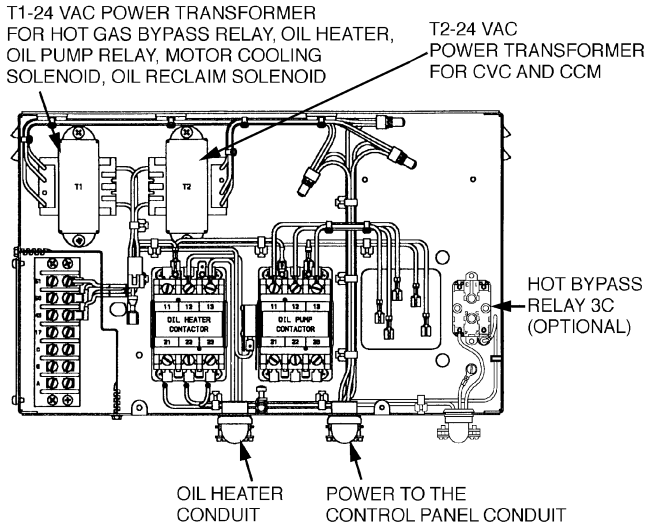

Fig. 11 — Power Panel

CVC Operation and Menus (Fig. 12-18)

GENERAL

- The CVC display automatically reverts to the default screen after 15 minutes if no softkey activity takes place and if the chiller is not in the pumpdown mode (Fig. 12).
- If a screen other than the default screen is displayed on the CVC, the name of that screen is in the upper right corner (Fig. 13).
- The CVC may be set to display either English or SI units. Use the CVC configuration screen (accessed from the Service menu) to change the units. See the Service Operation section, page 43.
- Local Operation — The PIC II can be placed in local operating mode by pressing the LOCAL softkey. The PIC II then accepts commands from the CVC only and uses the Local Time Schedule to determine chiller start and stop times.
- CCN Operation — The PIC II can be placed in the CCN operating mode by pressing the CCN softkey. The PIC II then accepts modifications from any CCN interface or module (with the proper authority), as well as from the CVC. The PIC II uses the CCN time schedule to determine start and stop times.

ALARMS AND ALERTS — An alarm shuts down the compressor. An alert does not shut down the compressor, but it notifies the operator that an unusual condition has occurred. An alarm (*) or alert (!) is indicated on the STATUS screens on the far right field of the CVC display screen.

Alarms are indicated when the control center alarm light (!) flashes. The primary alarm message is displayed on the default screen. An additional, secondary message and troubleshooting information are sent to the ALARM HISTORY table.

When an alarm is detected, the CVC default screen will freeze (stop updating) at the time of alarm. The freeze enables the operator to view the chiller conditions at the time of alarm. The STATUS tables will show the updated information. Once all alarms have been cleared (by pressing the RESET softkey), the default CVC screen will return to normal operation.

CVC MENU ITEMS — To perform any of the operations described below, the PIC II must be powered up and have successfully completed its self test. The self test takes place automatically, after power-up.

Press the MENU softkey to view the list of menu structures: STATUS, SCHEDULE, SETPOINT, and SERVICE.

- The STATUS menu allows viewing and limited calibration or modification of control points and sensors, relays and contacts, and the options board.
- The SCHEDULE menu allows viewing and modification of the local and CCN time schedules and Ice Build time schedules.
- The SETPOINT menu allows set point adjustments, such as the entering chilled water and leaving chilled water set points.

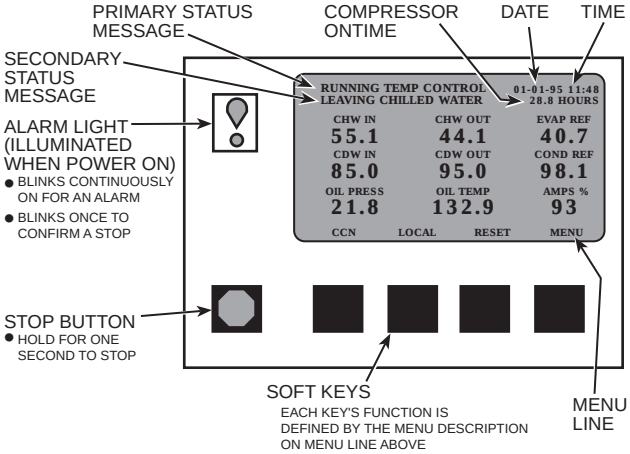

Fig. 12 — CVC Default Screen

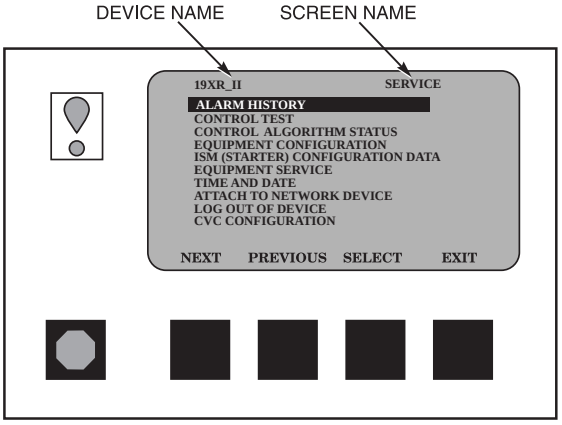

Fig. 13 — CVC Service Screen

- The SERVICE menu can be used to view or modify information on the Alarm History, Control Test, Control Algorithm Status, Equipment Configuration, ISM Starter Configuration data, Equipment Service, Time and Date, Attach to Network Device, Log Out of Network Device, and CVC Configuration screens.

For more information on the menu structures, refer to Fig. 15.

Press the softkey that corresponds to the menu structure to be viewed : STATUS, SCHEDULE, SETPOINT, or SERVICE. To view or change parameters within any of these menu structures, use the NEXT and PREVIOUS softkeys to scroll down to the desired item or table. Use the SELECT softkey to select that item. The softkey choices that then appear depend on the selected table or menu. The softkey choices and their functions are described below.

BASIC CVC OPERATIONS (Using the Softkeys) — To perform any of the operations described below, the PIC II must be powered up and have successfully completed its self test.

- Press QUIT to leave the selected decision or field without saving any changes.

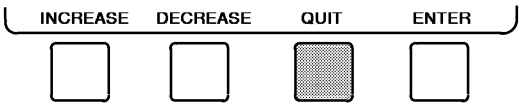

- Press ENTER to leave the selected decision or field and save changes.

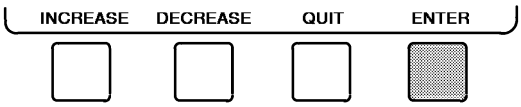

- Press NEXT to scroll the cursor bar down in order to highlight a point or to view more points below the current screen.

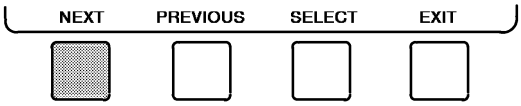

- Press PREVIOUS to scroll the cursor bar up in order to highlight a point or to view points above the current screen.

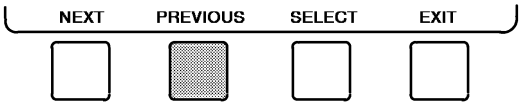

- Press SELECT to view the next screen level (highlighted with the cursor bar), or to override (if allowable) the highlighted point value.

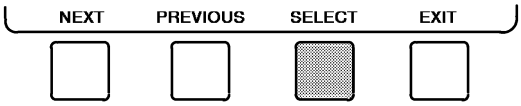

- Press EXIT to return to the previous screen level.

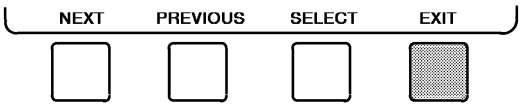

- Press INCREASE or DECREASE to change the highlighted point value.

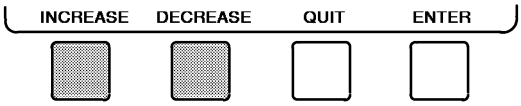

TO VIEW STATUS (Fig. 14) — The status table shows the actual value of overall chiller status such as CONTROL MODE, RUN STATUS, AUTO CHILLED WATER, RESET, and REMOTE RESET SENSOR.

1. On the menu screen, press STATUS to view the list of point status tables.

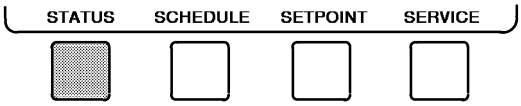

2. Press NEXT or PREVIOUS to highlight the desired status table. The list of tables is:
   - MAINSTAT — Overall chiller status
   - STARTUP — Status required to perform startup of chiller
   - COMPRESS — Status of sensors related to the compressor
   - HEAT_EX — Status of sensors related to the heat exchangers
   - POWER — Status of motor input power
   - ISM_STAT — Status of motor starter
   - CVC_PSWD — Service menu password forcing access screen

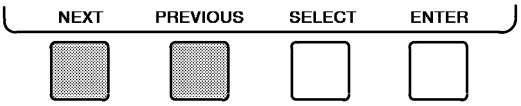

3. Press SELECT to view the desired point status table.

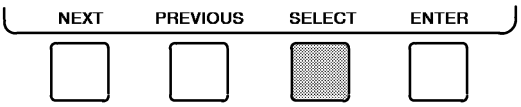

4. On the point status table, press NEXT or PREVIOUS until the desired point is displayed on the screen.

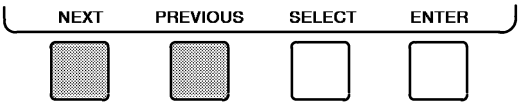

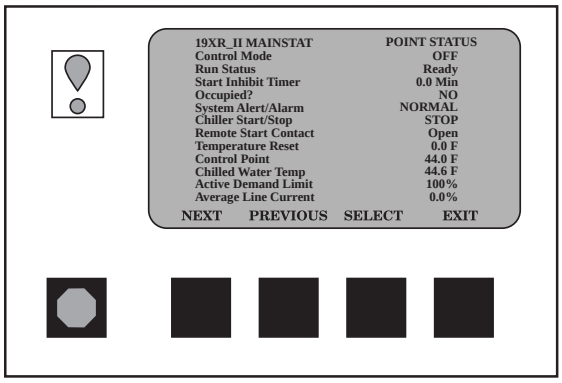

Fig. 14 — Example of Status Screen

OVERRIDE OPERATIONS

To Override a Value or Status

1. From any point status screen, press NEXT or PREVIOUS to highlight the desired value.

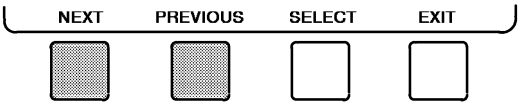

2. Press SELECT to select the highlighted value. Then:

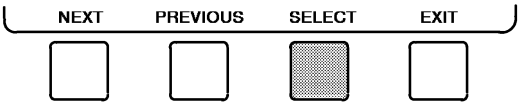

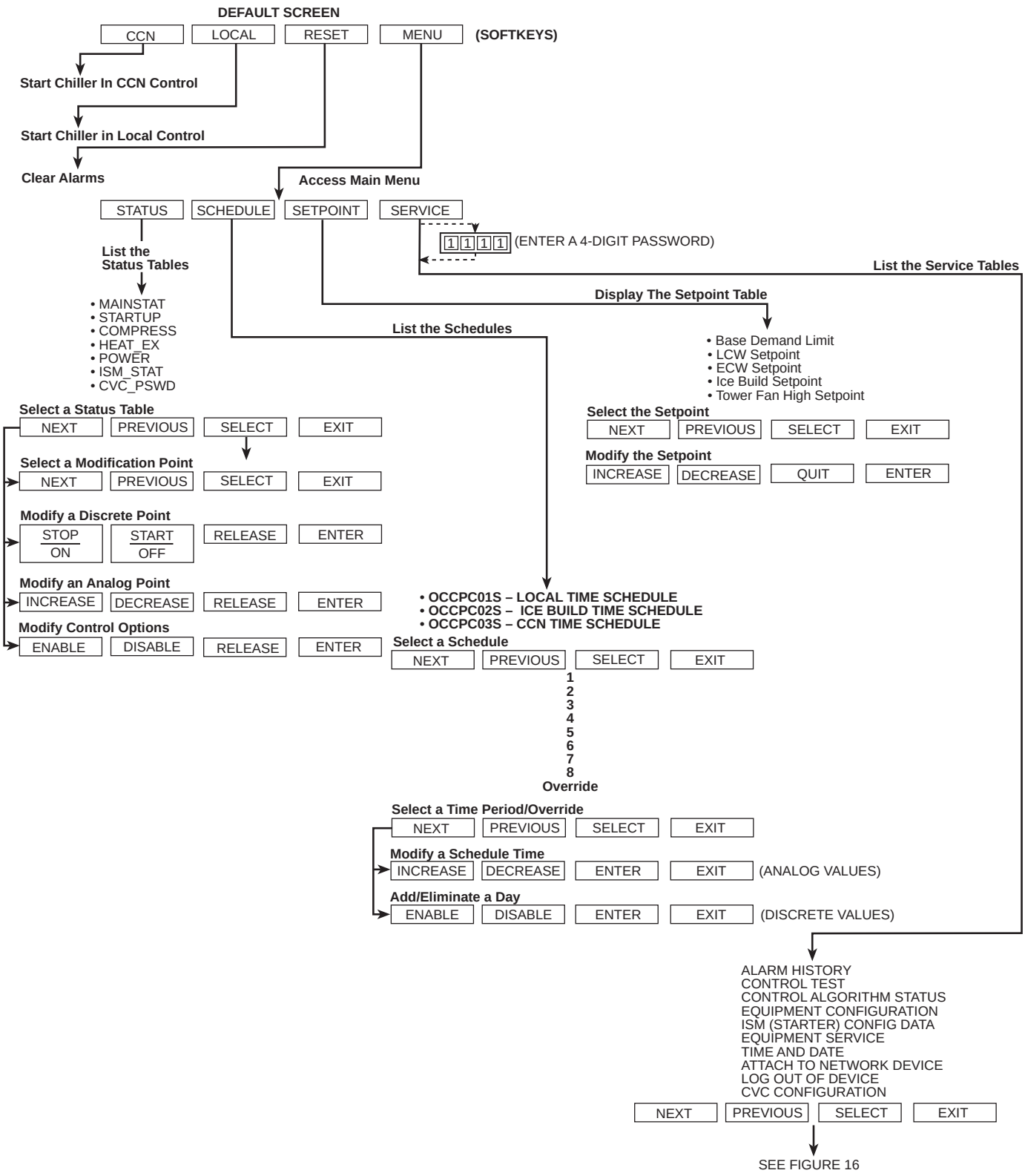

Fig. 15 — 19XR CVC Menu Structure

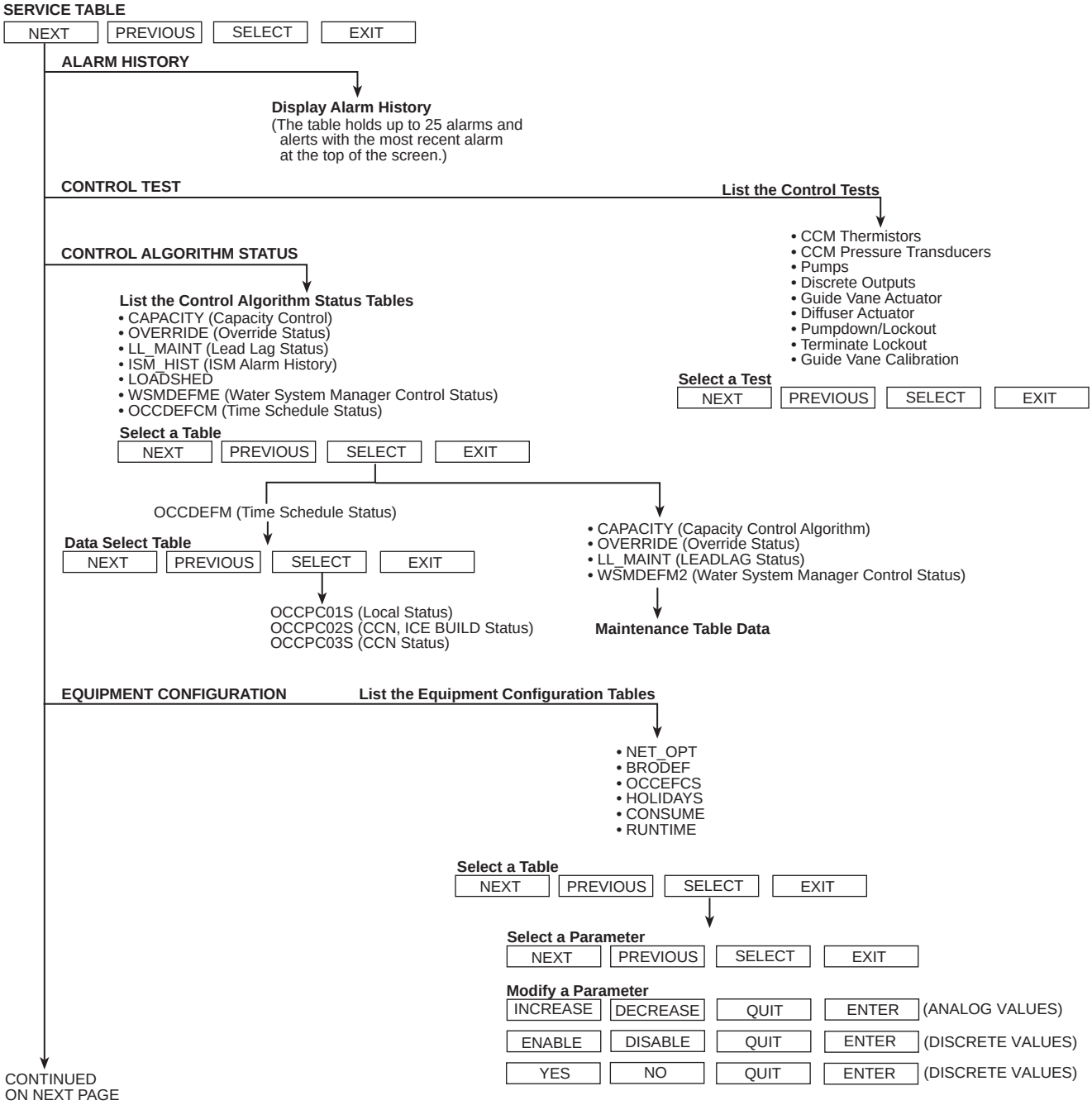

Fig. 16 — 19XR Service Menu Structure

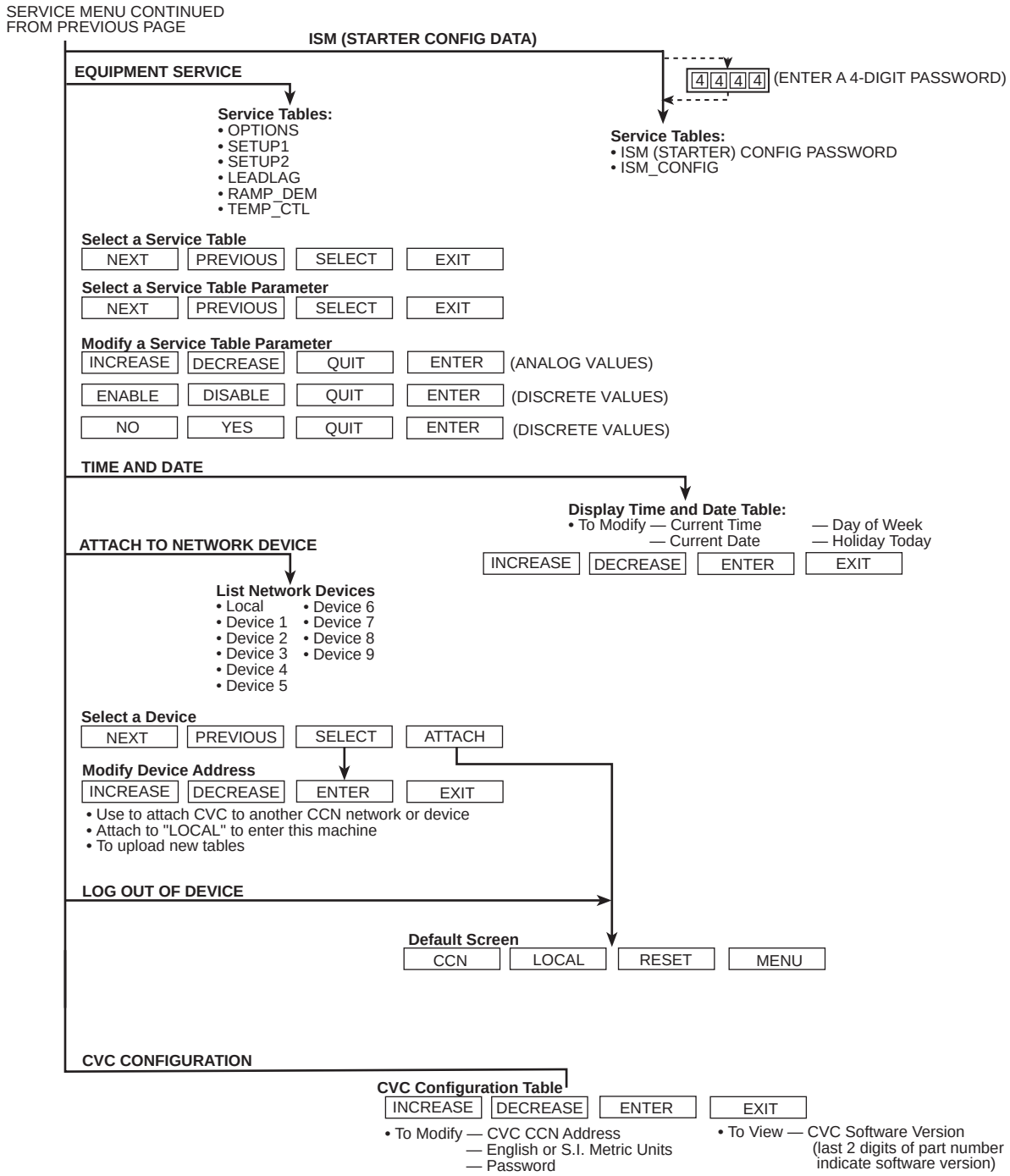

LEGEND

CCN — Carrier Comfort Network
CVC — Chiller Visual Control
ISM — Integrated Starter Module
PIC II — Product Integrated Control II

Fig. 16 — 19XR Service Menu Structure (cont)

For Discrete Points — Press START or STOP to select the desired state.

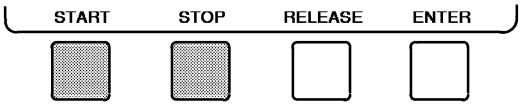

For Analog Points — Press INCREASE or DECREASE to select the desired value.

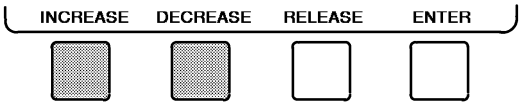

3. Press ENTER to register the new value.

NOTE: When overriding or changing metric values, it is necessary to hold down the softkey for a few seconds in order to see a value change, especially on kilopascal values.

To Remove an Override

1. On the point status table press NEXT or PREVIOUS to highlight the desired value.

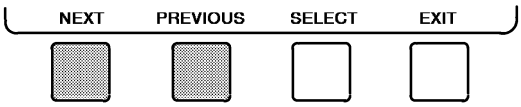

2. Press SELECT to access the highlighted value.

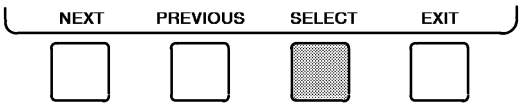

3. Press RELEASE to remove the override and return the point to the PIC II's automatic control.

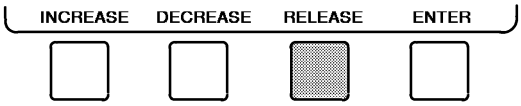

Override Indication — An override value is indicated by "SUPVSR," "SERVC," or "BEST" flashing next to the point value on the STATUS table.

TIME SCHEDULE OPERATION (Fig. 17)

1. On the Menu screen, press SCHEDULE.

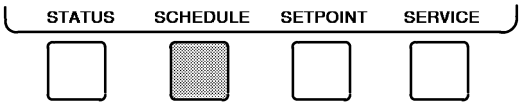

2. Press NEXT or PREVIOUS to highlight the desired schedule.

   OCCPC01S — LOCAL Time Schedule
   OCCPC02S — ICE BUILD Time Schedule
   OCCPC03 — CCN Time Schedule

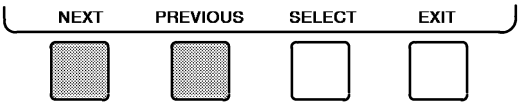

3. Press SELECT to view the desired time schedule.

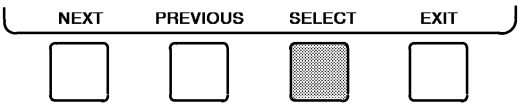

4. Press NEXT or PREVIOUS to highlight the desired period or override to change.

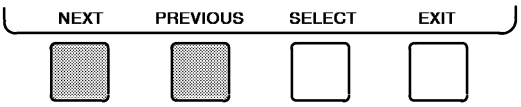

5. Press SELECT to access the highlighted period or override.

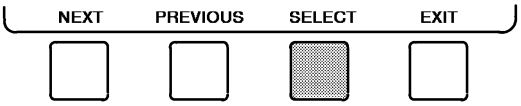

6. a. Press INCREASE or DECREASE to change the time values. Override values are in one-hour increments, up to 4 hours.

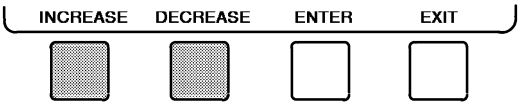

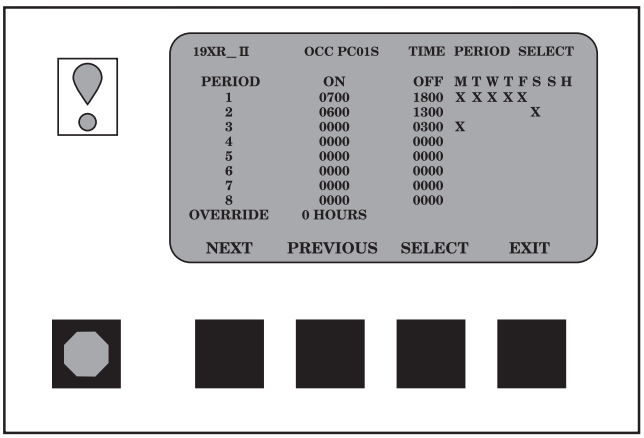

Fig. 17 — Example of Time Schedule Operation Screen

b. Press ENABLE to select days in the day-of-week fields. Press DISABLE to eliminate days from the period.

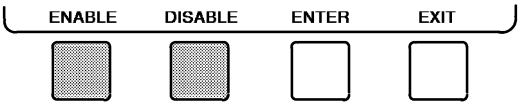

7. Press ENTER to register the values and to move horizontally (left to right) within a period.

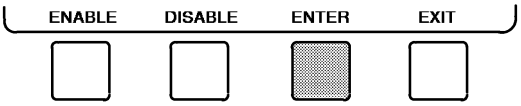

8. Press EXIT to leave the period or override.

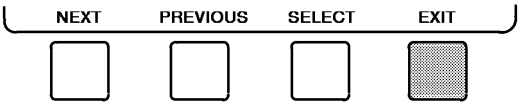

9. Either return to Step 4 to select another period or override, or press EXIT again to leave the current time schedule screen and save the changes.

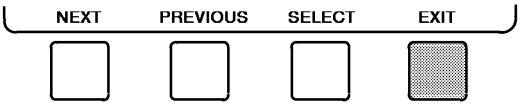

10. The Holiday Designation (HOLIDEF table) may be found in the Service Operation section, page 43. The month, day, and duration for the holiday must be assigned. The Broadcast function in the BRODEF table also must be enabled for holiday periods to function.

TO VIEW AND CHANGE SET POINTS (Fig. 18)

1. To view the SETPOINT table, from the MENU screen press SETPOINT .

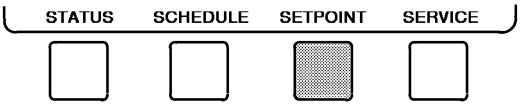

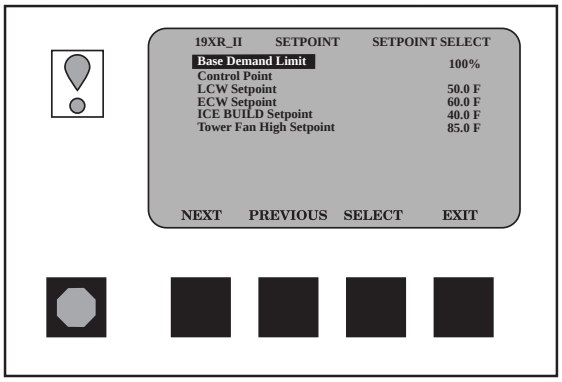

Fig. 18 — Example of Set Point Screen

2. There are 5 set points on this screen: BASE DEMAND LIMIT, LCW SETPOINT (leaving chilled water set point), ECW SETPOINT (entering chilled water set point), ICE BUILD SETPOINT, and TOWER FAN HIGH SETPOINT. Only one of the chilled water set points can be active at one time. The set point that is active is determined from the SERVICE menu. See the Service Operation section, page 43. The ice build (ICE BUILD) function is also activated and configured from the SERVICE menu.

3. Press NEXT or PREVIOUS to highlight the desired set point entry.

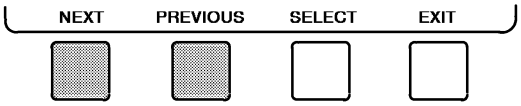

4. Press SELECT to modify the highlighted set point.

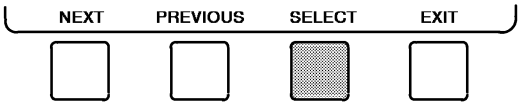

5. Press INCREASE or DECREASE to change the selected set point value.

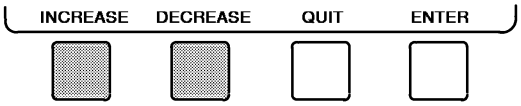

6. Press ENTER to save the changes and return to the previous screen.

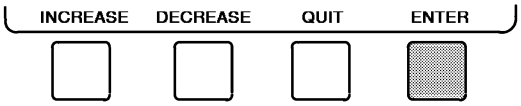

SERVICE OPERATION — To view the menu-driven programs available for Service Operation, see Service Operation section, page 43. For examples of CVC display screens, see Table 2.

Table 2 — CVC Display Data

IMPORTANT: The following notes apply to all Table 2 examples.

1. Only 12 lines of information appear on the CVC screen at any one time. Press the NEXT or PREVIOUS softkey to highlight a point or to view items below or above the current screen. Press the NEXT softkey twice to page forward; press the PREVIOUS softkey twice to page back.
2. To access the information shown in Examples 9 through 21, enter your 4-digit password after pressing the SERVICE softkey. If no softkeys are pressed for 15 minutes, the CVC automatically logs off (to prevent unrestricted access to PIC II controls) and reverts to the default screen. If this happens, you must reenter your password to access the tables shown in Examples 9 through 21.
3. Terms in the Description column of these tables are listed as they appear on the CVC screen.
4. The CVC may be configured in English or Metric (SI) units using the CVC CONFIGURATION screen. See the Service Operation section, page 43, for instructions on making this change.
5. The items in the Reference Point Name column *do not appear on the CVC screen*. They are data or variable names used in CCN or Building Supervisor (BS) software. They are listed in these tables as a convenience to the operator if it is necessary to cross reference CCN/BS documentation or use CCN/BS programs. For more information, see the 19XR CCN literature.
6. Reference Point Names shown in these tables in all capital letters can be read by CCN and BS software. Of these capitalized names, those preceded by a dagger can also be changed (that is, written to) by the CCN, BS, and the CVC. Capitalized Reference Point Names preceded by two asterisks can be changed only from the CVC. Reference Point Names in lower case type can be viewed by CCN or BS only by viewing the whole table.
7. Alarms and Alerts: An asterisk *in the far right field of a CVC status screen* indicates that the chiller is in an alarm state; an exclamation point in the far right field of the CVC screen indicates an alert state. The asterisk (or exclamation point) indicates that the value on that line has exceeded (or is approaching) a limit. For more information on alarms and alerts, see the Alarms and Alerts section, page 14.

LEGEND

CCN — Carrier Comfort Network
CHW — Chilled Water
CHWR — Chilled Water Return
CHWS — Chilled Water Supply
CVC — Chiller Visual Control
CT — Current Transformer
ECW — Entering Chilled Water
HGBP — Hot Gas Bypass
ISM — Integrated Starter Module
LCW — Leaving Chilled Water
LRA — Locked Rotor Amps
mA — Milliamps
P — Pressure
SS — Solid State
T — Temperature
VFD — Variable Frequency Drive
WSM — Water System Manager

EXAMPLE 1 — CVC DEFAULT SCREEN

The following data is displayed in the CVC Default screen.

DESCRIPTION	RANGE	UNITS	REFERENCE POINT NAME (ALARM HISTORY)	DISPLAY
(PRIMARY MESSAGE)				
(SECONDARY MESSAGE)				
(DATE AND TIME)				
Compressor Ontime	0-500000.0	HOURS	C__HRS	
Entering Chilled Water	−40-245	DEG F	ECW	CHW IN
Leaving Chilled Water	−40-245	DEG F	LCW	CHW OUT
Evaporator Temperature	−40-245	DEG F	ERT	EVAP REF
Entering Condenser Water	−40-245	DEG F	ECDW	CDW IN
Leaving Condenser Water	−40-245	DEG F	LCDW	CDW OUT
Condenser Temperature	−40-245	DEG F	CRT	COND REF
Oil Pressure	0-420	PSI	OILPD	OILPRESS
Oil Sump Temp	−40-245	DEG F	OILT	OIL TEMP
Average Line Current	0-999	%	AMPS__%	AMPS %
	0-1		CCN	
	0-1		LOCAL	
	0-1		RESET	

NOTE: The last three entries are used to indicate operating mode to the PIC II. These values may be forced by the CVC only.

Table 2 — CVC Display Data (cont)

EXAMPLE 2 — MAINTSTAT DISPLAY SCREEN

To access this display from the **CVC default** screen:

1. Press **MENU** .
2. Press **STATUS** (**MAINSTAT** will be highlighted).
3. Press **SELECT** .

DESCRIPTION	STATUS	UNITS	POINT
Control Mode	NOTE 1	NOTE 1	MODE
Run Status	NOTE 2	NOTE 2	STATUS
Start Inhibit Timer	0-15	min	T__START
Occupied ?	0/1	NO/YES	OCC
System Alert/Alarm	0-2	NOTE 3	SYS__ALM
***Chiller Start/Stop**	0/1	STOP/START	CHIL__ S__S
***Remote Start Contact**	0/1	OFF/ON	REMCON
Temperature Reset	−30-30	DEG F	T__RESET
***Control Point**	10-120	DEG F	LCW__STPT
Chilled Water Temp	−40-245	DEG F	CHW__TMP
***Active Demand Limit**	40-100	%	DEM__LIM
Average Line Current	0-999	%	%__AMPS
Motor Percent Kilowatts	0-999	%	KW__P
Auto Demand Limit Input	4-20	mA	AUTODEM
Auto Chilled Water Reset	4-20	mA	AUTORES
Remote Reset Sensor	−40-245	DEG F	R__RESET
Total Compressor Starts	0-99999		c__starts
Starts in 12 Hours	0-8		STARTS
Compressor Ontime	0-500000.0	HOURS	c__hrs
***Service Ontime**	0-32767	HOURS	S__HRS
Ice Build Contact	0-1	OPEN/CLOSE	ICE__CON
Refrigerant Leak Sensor	0-20	mA	REF__LEAK

NOTES:
1. Reset, Off, Local, CCN
2. Timeout, Ready, Recycle, Prestart, Start-up, Ramping, Running, Demand, Override, Shutdown, Trippout, Pumpdown, Lockout
3. Normal, Alert, Alarm
4. All variables with capital letter point names are available for CCN read operation. Those shown with (*) support write operations for all CCN devices.

EXAMPLE 3 — STARTUP DISPLAY SCREEN

To access this display from the **CVC default** screen:

1. Press **MENU** .
2. Press **STATUS**.
3. Scroll down to highlight **STARTUP**.
4. Press **SELECT** .

DESCRIPTION	STATUS	UNITS	POINT
Actual Guide Vane Pos	0-100	%	GV__ACT
****Chilled Water Pump**	0-1	OFF/ON	CHWP
Chilled Water Flow	0-1	NO/YES	CHW__FLOW
****Condenser Water Pump**	0-1	OFF/ON	CDP
Condenser Water Flow	0-1	NO/YES	CDW__FLOW
Oil Pump Relay	0-1	OFF/ON	OILR
****Oil Pump Delta P**	−6.7-200	^PSI	OILPD
Compressor Start Relay	0-1	OFF/ON	CMPR
Compressor Start Contact	0-1	OPEN/CLOSED	ICR__AUX
Starter Trans Relay	0-1	OFF/ON	CMPTRANS
Compressor Run Contact	0-1	OPEN/CLOSED	RUN__AUX
****Tower Fan Relay Low**	0-1	OFF/ON	TFR__LOW
****Tower Fan Relay High**	0-1	OFF/ON	TFR__HIGH
Starter Fault	0-1	ALARM/NORMAL	STR__FLT
Spare Safety Input	0-1	ALARM/NORMAL	SAFETY
Shunt Trip Relay	0-1	OFF/ON	TRIPR
Starter Fault Status	0-255		STRSTAT

NOTE: All variables with CAPITAL LETTER point names are available for CCN read operation. Those shown with (**) shall support write operations for the CVC only.

Table 2 — CVC Display Data (cont)

EXAMPLE 4 — COMPRESS DISPLAY SCREEN

To access this display from the **CVC default** screen:

1. Press **MENU** .
2. Press **STATUS** .
3. Scroll down to highlight **COMPRESS** .
4. Press **SELECT** .

DESCRIPTION	STATUS	UNITS	POINT
Actual Guide Vane Pos	0-100	%	GV__ACT
Guide Vane Delta	0-100	%	GV__DELTA
****Target Guide Vane Pos**	0-100	%	GV__TRG
Oil Sump Temp	−40-245	DEG F	OILT
****Oil Pump Delta P**	−6.7-200	DEG F	OILPD
Comp Discharge Temp	−40-245	DEG F	CMPD
Comp Thrust Brg Temp	−40-245	DEG F	MTRB
Comp Motor Winding Temp	−40-245	DEG F	MTRW
Spare Temperature 1	−40-245	DEG F	SPARE1
Spare Temperature 2	−40-245	DEG F	SPARE2
Oil Heater Relay	0/1	OFF/ON	OILH
Diffuser Actuator	0-100	%	DIFF__ACT
****Target VFD Speed**	0-110	%	VFD__OUT
****Actual VFD Speed**	0-100	%	VFD__ACT
Surge Protection Counts	0-5		spc

NOTE: All variables with CAPITAL LETTER point names are available for CCN read operation. Those shown with (**) shall support write operations for the CVC only.

EXAMPLE 5 — HEAT__EX DISPLAY SCREEN

To access this display from the **CVC default** screen:

1. Press **MENU** .
2. Press **STATUS** .
3. Scroll down to highlight **HEAT__EX** .
4. Press **SELECT** .

DESCRIPTION	STATUS	UNITS	POINT
****Chilled Water Delta P**	−6.7-420	PSI	CHW__PD
Entering Chilled Water	−40-245	DEG F	ECW
Leaving Chilled Water	−40-245	DEG F	LCW
Chilled Water Delta T	−6.7-420	^ F	CHW__DT
Chill Water Pulldown/Min	−20-20	^ F	CHW__PULL
Evaporator Refrig Temp	−40-245	DEG F	ERT
****Evaporator Pressure**	−6.7-420	PSI	ERP
Evaporator Approach	0-99	^ F	EVAP__APP
****Condenser Water Delta P**	−6.7-420	PSI	COND__PD
Entering Condenser Water	−40-245	DEG F	ECDW
Leaving Condenser Water	−40-245	DEG F	LCDW
Condenser Refrig Temp	−40-245	DEG F	CRT
****Condenser Pressure**	−6.7-420	PSI	CRP
Condenser Approach	0-99	^ F	COND__APP
Hot Gas Bypass Relay	0/1	OFF/ON	HGBR
Surge/HGBP Active ?	0/1	NO/YES	SHG__ACT
Active Delta P	0-200	PSI	dp__a
Active Delta T	0-200	DEG F	dt__a
Surge/HGBP Delta T	0-200	DEG F	dt__c

NOTE: All variables with CAPITAL LETTER point names are available for CCN read operation. Those shown with (**) shall support write operations for the CVC only.

Table 2 — CVC Display Data (cont)

EXAMPLE 6 — POWER DISPLAY SCREEN

To access this display from the **CVC default** screen:

1. Press **MENU** .
2. Press **STATUS** .
3. Scroll down to highlight **POWER** .
4. Press **SELECT** .

DESCRIPTION	STATUS	UNITS	POINT
Average Line Current	0-999	%	%__AMPS
Actual Line Current	0-99999	AMPS	AMP__A
Average Line Voltage	0-999	%	VOLT__P
Actual Line Voltage	0-99999	VOLTS	VOLT__A
Power Factor	0.0-1.0		PF
Motor Kilowatts	0-99999	kW	KW__A
Motor Kilowatt-Hours	0-99999	kWH	KWH
Demand Kilowatts	0-99999	kWH	DEM__KWH
Line Current Phase 1	0-99999	AMPS	AMPS__1
Line Current Phase 2	0-99999	AMPS	AMPS__2
Line Current Phase 3	0-99999	AMPS	AMPS__3
Line Voltage Phase 1	0-99999	VOLTS	VOLTS__1
Line Voltage Phase 2	0-99999	VOLTS	VOLTS__2
Line Voltage Phase 3	0-99999	VOLTS	VOLTS__3
Ground Fault Phase 1	0-999	AMPS	GF__1
Ground Fault Phase 2	0-999	AMPS	GF__2
Ground Fault Phase 3	0-999	AMPS	GF__3
Frequency	0-99	Hz	FREQ
I2T Sum Heat-Phase 1	0-200	%	HEAT1SUM
I2T Sum Heat-Phase 2	0-200	%	HEAT2SUM
I2T Sum Heat-Phase 3	0-200	%	HEAT3SUM

NOTE: All variables with CAPITAL LETTER point names are available for CCN read operation.

EXAMPLE 7 — ISM__STAT SCREEN

To access this display from the **CVC default** screen:

1. Press **MENU** .
2. Press **STATUS** .
3. Scroll down to highlight **ISM__STAT** .
4. Press **SELECT** .

DESCRIPTION	STATUS	UNITS	POINT
ISM Fault Status	0-223		ISMFLT
Single Cycle Dropout	0-1	NORMAL/ALARM	CYCLE__1
Phase Loss	0-1	NORMAL/ALARM	PH__LOSS
Overvoltage	0-1	NORMAL/ALARM	OV__VOLT
Undervoltage	0-1	NORMAL/ALARM	UN__VOLT
Current Imbalance	0-1	NORMAL/ALARM	AMP__UNB
Voltage Imbalance	0-1	NORMAL/ALARM	VOLT__UNB
Overload Trip	0-1	NORMAL/ALARM	OVERLOAD
Locked Rotor Trip	0-1	NORMAL/ALARM	LRATRIP
Starter LRA Trip	0-1	NORMAL/ALARM	SLRATRIP
Ground Fault	0-1	NORMAL/ALARM	GRND__FLT
Phase Reversal	0-1	NORMAL/ALARM	PH__REV
Frequency Out of Range	0-1	NORMAL/ALARM	FREQFLT
ISM Power on Reset	0-1	NORMAL/ALARM	ISM__POR
Phase 1 Fault	0-1	NORMAL/ALARM	PHASE__1
Phase 2 Fault	0-1	NORMAL/ALARM	PHASE__2
Phase 3 Fault	0-1	NORMAL/ALARM	PHASE__3
ICR Start Complete	0-1	FALSE/TRUE	START__OK
IM Start/Run Fault	0-1	NORMAL/ALARM	1M__FLT
2M Start/Run Fault	0-1	NORMAL/ALARM	2M__FLT
Pressure Trip Contact	0-1	NORMAL/ALARM	PRS__TRIP
Starter Fault	0-1	NORMAL/ALARM	STRT__FLT
Motor Amps Not Sensed	0-1	NORMAL/ALARM	NO__AMPS
Starter Acceleration Fault	0-1	NORMAL/ALARM	ACCELFLT
High Motor Amps	0-1	NORMAL/ALARM	HIGHAMPS
ICR Stop Complete	0-1	FALSET/TRUE	STOP__OK
1M/2M Stop Fault	0-1	NORMAL/ALARM	1M2MSTOP
Motor Amps When Stopped	0-1	NORMAL/ALARM	AMPSTOP
Hardware Failure	0-1	NORMAL/ALARM	HARDWARE

NOTE: All variables with CAPITAL LETTER point names are available for CCN read operation.

Table 2 — CVC Display Data (cont)

EXAMPLE 8 — SET POINT DISPLAY SCREEN

To access this display from the **CVC default** screen:

1. Press **MENU** .
2. Press **SETPOINT** (Base Demand Limit will be highlighted).
3. Press **SELECT** .

DESCRIPTION	STATUS	UNITS	POINT	DEFAULT
Base Demand Limit	40-100	%	DLM	100
Control Point				
LCW Set Point	10-120	DEG F	lcw__sp	50.0
ECW Set Point	15-120	DEG F	ecw__sp	60.0
Ice Build Set Point	15-60	DEG F	ice__sp	40.0
Tower Fan High Set Point	55-105	DEG F	tf2__sp	75

NOTE: All variables are available for CCN read operation; forcing shall not be supported on set point screens.

EXAMPLE 9 — CAPACITY DISPLAY SCREEN

To access this display from the **CVC default** screen:

1. Press **MENU** .
2. Press **SERVICE** .
3. Scroll down to highlight **CONTROL ALGORITHM STATUS** .
4. Press **SELECT** .
5. Scroll down to highlight **CAPACITY** .

DESCRIPTION	STATUS	UNITS	POINT
Entering Chilled Water	−40-245	DEG F	ECW
Leaving Chilled Water	−40-245	DEG F	LCW
Capacity Control			
Control Point	10-120	DEG F	ctrlpt
Control Point Error	−99-99	DEG F	cperr
ECW Delta T	−99-99	DEG F	ecwdt
ECW Reset	−99-99	DEG F	ecwres
LCW Reset	−99-99	DEG F	lcwres
Total Error + Resets	−99-99	DEG F	error
Guide Vane Delta	−2-2	%	gvd
Target Guide Vane Pos	0-100	%	GV__TRG
Actual Guide Vane Pos	0-100	%	GV__ACT
Target VFD Speed	0-100	%	VFD__IN
ACTUAL VFD Speed	0-100	%	VFD__ACT
VFD Gain	0.1-1.5		vfd__gain
Demand Inhibit Active	0-1	NO/YES	DEM__INH
Amps/kW Ramp	0-100	%	DMD__RAMP

NOTE: All variables with CAPITAL LETTER point names are available for CCN read operation; forcing shall not be supported on maintenance screen.

Table 2 — CVC Display Data (cont)

EXAMPLE 10 — OVERRIDE DISPLAY SCREEN

To access this display from the **CVC default** screen:

1. Press **MENU** .
2. Press **SERVICE** .
3. Scroll down to highlight **CONTROL ALGORITHM STATUS** .
4. Press **SELECT** .
5. Scroll down to highlight **OVERRIDE** .

DESCRIPTION	STATUS	UNITS	POINT
Comp Motor Winding Temp	−40-245	DEG F	MTRW
Comp Motor Temp Override	150-200	DEG F	mt__over
Condenser Pressure	0-420	PSI	CRP
Cond Press Override	90-180	PSI	cp__over
Evaporator Refrig Temp	−40-245	DEG F	ERT
Evap Ref Override Temp	2-45	DEG F	rt__over
Comp Discharge Temp	−40-245	DEG F	CMPD
Comp Discharge Alert	125-200	DEG F	cd__alert
Comp Thrust Brg Temp	−40-245	DEG F	MTRB
Comp Thrust Brg Alert	165-185	DEG F	tb__alert
Actual Superheat	−20-99	DEG F	SUPRHEAT
Superheat Required	6-99	^ F	SUPR__REQ
Condenser Refrig Temp	−40-245	^ F	CRT

NOTE: All variables with CAPITAL LETTER point names are available for CCN read operation; forcing shall not be supported on maintenance screens.

EXAMPLE 11 — LL__MAINT DISPLAY SCREEN

To access this display from the **CVC default** screen:

1. Press **MENU** .
2. Press **SERVICE** .
3. Scroll down to highlight **CONTROL ALGORITHM STATUS** .
4. Press **SELECT** .
5. Scroll down to highlight **LL__MAINT.** .

DESCRIPTION	STATUS	UNITS	POINT
Lead Lag Control			
LEAD/LAG: Configuration	NOTE 1		leadlag
Current Mode	NOTE 2		llmode
Load Balance Option	0/1	DSABLE/ENABLE	loadbal
LAG Start Time	2-60	MIN	lagstart
LAG Stop Time	2-60	MIN	lagstop
PRESTART FAULT Time	2-30	MIN	preflt
Pulldown: Delta T/Min	x.xx	^ DEG	pull__dt
Satisfied?	0/1	NO/YES	pull__sat
LEAD CHILLER in Control	0/1	NO/YES	leadctrl
LAG CHILLER: Mode	NOTE 3		lagmode
Run Status	NOTE 4		lagstat
Start/Stop	NOTE 5		lag__s__s
Recovery Start Request	0/1	NO/YES	lag__rec
STANDBY CHILLER: Mode	NOTE 3		stdmode
Run Status	NOTE 4		stdstat
Start/Stop	NOTE 5		Std__s__s
Recovery Start Request	0/1	NO/YES	std__rec
Spare Temperature 1	−40-245	DEG F	SPARE1
Spare Temperature 2	−40-245	DEG F	SPARE2

NOTES:
1. DISABLE, LEAD, LAG, STANDBY, INVALID
2. DISABLE, LEAD, LAG, STANDBY, RECOVERY, CONFIG
3. Reset, Off, Local, CCN
4. Timeout, Ready, Recycle, Prestart, Startup Ramping, Running, Demand, Override, Shutdown, Trippout, Pumpdown, Lockout
5. Stop, Start, Retain
6. All variables with CAPITAL LETTER point names are available for CCN read operation; forcing shall not be supported on maintenance screens.

Table 2 — CVC Display Data (cont)

EXAMPLE 12 — ISM__HIST DISPLAY SCREEN

To access this display from the **CVC default** screen:

1. Press **MENU** .
2. Press **SERVICE** .
3. Scroll down to highlight **CONTROL ALGORITHM STATUS** .
4. Press **SELECT** .
5. Scroll down to highlight **ISM__HIST** .

DESCRIPTION	STATUS	UNITS	POINT
ISM FAULT HISTORY			
Values At Last Fault:			
Line Current Phase 1	0-99999	AMPS	AMPS__1F
Line Current Phase 2	0-99999	AMPS	AMPS__2F
Line Current Phase 3	0-99999	AMPS	AMPS__3F
Line Voltage Phase 1	0-99999	VOLTS	VOLTS__1F
Line Voltage Phase 2	0-99999	VOLTS	VOLTS__2F
Line Voltage Phase 3	0-99999	VOLTS	VOLTS__3F
Ground Fault Phase 1	0-999	AMPS	GF__1F
Ground Fault Phase 2	0-999	AMPS	GF__2F
Ground Fault Phase 3	0-999	AMPS	GF__3F
I2T Sum Heat-Phase 1	0-200	%	HEAT1SUMF
I2T Sum Heat-Phase 2	0-200	%	HEAT2SUMF
I2T Sum Heat-Phase 3	0-200	%	HEAT3SUMF
Phase 1 Faulted?	0/1	NO/YES	PH1__FLT
Phase 2 Faulted?	0/1	NO/YES	PH2__FLT
Phase 3 Faulted?	0/1	NO/YES	PH3__FLT
Line Frequency	0-99	Hz	FREQ__F
ISM Fault Status	0-9999		ISM__STAT

NOTE: All variables with CAPITAL LETTER point names are available for CCN read operation; forcing shall not be supported on maintenance screens.

EXAMPLE 13 — WSMDEFME DISPLAY SCREEN

To access this display from the **CVC default** screen:

1. Press **MENU** .
2. Press **SERVICE** .
3. Scroll down to highlight **CONTROL ALGORITHM STATUS** .
4. Press **SELECT** .
5. Scroll down to highlight **WSMDEFME** .

DESCRIPTION	STATUS	UNITS	POINT
WSM Active?	0/1	NO/YES	WSMSTAT
Chilled Water Temp	0.0-99.9	DEG F	CHWTEMP
Equipment Status	0/1	OFF/ON	CHLRST
Commanded State	XXXXXXXX	TEXT	CHLRENA
CHW setpt Reset Value	0.0-25.0	DEG F	CHWRVAL
Current CHW Set Point	0.0-99.9	DEG F	CHWSTPT

NOTE: All variables with CAPITAL LETTER point names are available for CCN read operation; forcing shall not be supported on maintenance screens.

Table 2 — CVC Display Data (cont)

EXAMPLE 14 — NET__OPT DISPLAY SCREEN

To access this display from the **CVC default** screen:

1. Press **MENU** .
2. Press **SERVICE** .
3. Scroll down to highlight **EQUIPMENT CONFIGURATION** .
4. Press **SELECT** .
5. Scroll down to highlight **NET__OPT** .

DESCRIPTION	STATUS	UNITS	POINT	DEFAULT
Loadshed Function				
Group Number	0-99		ldsgrp	0
Demand Limit Decrease	0-60	%	ldsdelta	20
Maximum Loadshed Time	0-120	MIN	maxldstm	60
CCN Occupancy Config:				
Schedule Number	3-99		occpcxxe	3
Broadcast Option	0-1	DSABLE/ENABLE	occbrcst	DSABLE
Alarm Configuration				
Re-alarm Time	0-1440	MIN		30
Alarm Routing	0-1			10000000

NOTE: No variables are available for CCN read or write operation.

EXAMPLE 15 — ISM__CONF DISPLAY SCREEN

To access this display from the **CVC default** screen:

1. Press **MENU** .
2. Press **SERVICE** .
3. Scroll down to highlight **ISM (STARTER) CONFIG DATA** .
4. Press **SELECT** .
5. Scroll down to highlight **ISM__CONF** .

DESCRIPTION	STATUS	UNITS	POINT	DEFAULT
Starter Type	0-2		starter	1
(0 = Full, 1 = Red, 2 = SS/VFD)				
Motor Rated Line Voltage	200-13200	VOLTS	v__fs	460
Volt Transformer Ratio:1	1-33		vt__rat	1
Overvoltage Threshold	105-115	%	overvolt	115
Undervoltage Threshold	85-95	%	undvolt	85
Over/Under Volt Time	1-10	SEC	uvuntime	5
Voltage % Imbalance	1-10	%	v__unbal	5
Voltage Imbalance Time	1-10	SEC	v__time	5
Motor Rated Load Amps	10-5000	AMPS	a__fs	200
Motor Locked Rotor Trip	100-60000	AMPS	motor__lr	1000
Locked Rotor Start Delay	1-10	cycles	lrdelay	5
Starter LRA Rating	100-60000	AMPS	start__lr	2000
Motor Current CT Ratio:1	10-1000		ct__turns	100
Current % Imbalance	5-40	%	c__unbal	15
Current Imbalance Time	1-10	SEC	c__time	5
3 Grnd Fault CT's? (1 = No)	0-1	NO/YES	gf__phase	YES
Ground Fault CT Ratio:1	150		gf__ctr	150
Ground Fault Current	1-20	AMPS	gf__amps	15
Ground Fault Start Delay	1-20	cycles	gf__delay	10
Ground Fault Persistence	1-10	cycles	gf__pers	5
Single Cycle Dropout	0/1	DSABLE/ENABLE	cycdrop	DSABLE
Frequency = 60 Hz? (No = 50)	0/1	NO/YES	freq	YES
Line Frequency Faulting	0/1	DSABLE/ENABLE	freq__en	DSABLE

Table 2 — CVC Display Data (cont)

EXAMPLE 16 — OPTIONS DISPLAY SCREEN

To access this display from the **CVC default** screen:

1. Press **MENU** .
2. Press **SERVICE** .
3. Scroll down to highlight **EQUIPMENT SERVICE** .
4. Press **SELECT** .
5. Scroll down to highlight **OPTIONS** .

DESCRIPTION	STATUS	UNITS	POINT	DEFAULT
Auto Restart Option	0/1	DSABLE/ENABLE	astart	DSABLE
Remote Contacts Option	0/1	DSABLE/ENABLE	r__contact	DSABLE
Soft Stop Amps Threshold	40-100	%	softstop	100
Surge/Hot Gas Bypass				
Surge Limit/HGBP Option	0/1		srg__hgbp	0
Select: Surge = 0, HGBP = 1				
Min. Load Point (T1/P1)				
Surge/HGBP Delta T1	0.5-15	^ F	hgb__dt1	1.5
Surge/HGBP Delta P1	30-170	PSI	hgb__dp1	50
Full Load Point (T2/P2)				
Surge/HGBP Delta T2	0.5-15	^ F	hgb__dt2	10
Surge/HGBP Delta P2	50-170	PSI	hgb__dp2	85
Surge/HGBP Deadband	0.5-3	^ F	hgb__dp	1
Surge Protection				
Surge Delta % Amps	5-15	%	surge__a	10
Surge Time Period	7-10	MIN	surge__t	8
Ice Build Control				
Ice Build Option	0/1	DSABLE/ENABLE	ibopt	DSABLE
Ice Build Termination	0-2		ibterm	0
0 = Temp, 1 = Contacts, 2 = Both				
Ice Build Recycle	0/1	DSABLE/ENABLE	ibrecyc	DSABLE
Refrigerant Leak Option	0/1	DSABLE/ENABLE		DSABLE
Refrigerant Leak Alarm mA	4-20	mA	REF__LEAK	20

NOTE: No variables are available for CCN read or write operation.

EXAMPLE 17 — SETUP1 DISPLAY SCREEN

To access this display from the **CVC default** screen:

1. Press **MENU** .
2. Press **SERVICE** .
3. Scroll down to highlight **EQUIPMENT SERVICE** .
4. Press **SELECT** .
5. Scroll down to highlight **SETUP1** .

DESCRIPTION	STATUS	UNITS	POINT	DEFAULT
Comp Motor Temp Override	150-200	DEG F	mt__over	200
Cond Press Override	90-165	PSI	cp__over	125
Comp Discharge Alert	125-200	DEG F	cd__alert	200
Comp Thrust Brg Alert	165-185	DEG F	tb__alert	175
Chilled Medium	0/1	WATER/BRINE	medium	WATER
Chilled Water Deadband	.5-2.0	^F	cw__db	1.0
Evap Refrig Trippoint	0.0-40.0	DEG F	ert__trip	33
Refrig Override Delta T	2.0-5.0	^F	ref__over	3
Condenser Freeze Point	−20 - 35	DEG F	cdfreeze	34
Evap Flow Delta P Cutout	0.5 - 50.0	PSI	evap__cut	5.0
Cond Flow Delta P Cutout	0.5 - 50.0	PSI	cond__cut	5.0
Water Flow Verify Time	0.5-5	MIN	wflow__t	5
Oil Press Verify Time	15-300	SEC	oilpr__t	40
Recycle control				
Recycle Restart Delta T	2.0-10.0	DEG F	rcycr__dt	5
Recycle Shutdown Delta	0.5-4.0	DEG F	rcycs__dt	1
SPARE ALERT/ALARM ENABLE				
Disable=0, Lo=1/3,Hi=2/4				
Spare Temp #1 Enable	0.4		sp1__en	0
Spare Temp #1 Limit	−40-245	DEG F	sp1__lim	245
Spare Temp #2 Enable	0-4		sp2__en	0
Spare Temp #2 Limit	-40-245	DEG F	sp2__lim	245

NOTE: No variables are available for CCN read operation; forcing shall not be supported on service screens.

Table 2 — CVC Display Data (cont)

EXAMPLE 18 — SETUP2 DISPLAY SCREEN

To access this display from the **CVC default** screen:

1. Press **MENU** .
2. Press **SERVICE** .
3. Scroll down to highlight **EQUIPMENT SERVICE** .
4. Press **SELECT** .
5. Scroll down to highlight **SETUP2** .

DESCRIPTION	STATUS	UNITS	POINT	DEFAULT
Capacity Control				
Proportional Inc Band	2-10		gv__inc	6.5
Proportional DEC Band	2-10		gv__dec	6.0
Proportional ECW Gain	1-3		gv__ecw	2.0
Guide Vane Travel Limit	30-100	%	gv__lim	80
Diffuser Control				
Diffuser Option	0-1	DSABLE/ENABLE	diff__opt	DSABLE
Guide Vane 25% Load Pt	0-78	%	gv__25	25
Diffuser 25% Load	0-100	%	df__25	0
Guide Vane 50% Load Pt	0-78	%	gv__50	50
Diffuser 50% Load Pt	0-100	%	df__50	0
Guide Vane 75% Load Pt	0-78	%	gv__75	75
Diffuser 75% Load Pt	0-100	%	df__75	0
Diffuser Full Span mA	15-22	mA	diff__ma	18
VFD Speed Control				
VFD Option	0/1	DSABLE/ENABLE	vfd__opt	DSABLE
VFD Gain	0.1-1.5		vfd__gain	0.75
VFD Increase Step	1-5	%	vfd__step	2
VFD Minimum Speed	65-100	%	vfd__min	70
VFD Maximum speed	90-110	%	vfd__max	100

NOTE: No variables are available for CCN read operation; forcing shall be supported on service screens.

EXAMPLE 19 − LEADLAG DISPLAY SCREEN

To access this display from the **CVC default** screen:

1. Press **MENU** .
2. Press **SERVICE** .
3. Scroll down to highlight **EQUIPMENT SERVICE** .
4. Press **SELECT** .
5. Scroll down to highlight **LEADLAG** .

DESCRIPTION	STATUS	UNITS	POINT	DEFAULT
Lead Lag Control				
LEAD/LAG Configuration DSABLE=0, LEAD=1, LAG=2, STANDBY=3	0-3		leadlag	0
Load Balance Option	0/1	DSABLE/ENABLE	load/bal	DSABLE
Common Sensor Option	0/1	DSABLE/ENABLE	commsens	DSABLE
LAG Percent Capacity	25-75	%	lag__per	50
LAG Address	1-236		lag__add	92
LAG START Timer	2-60	MIN	lagstart	10
LAG STOP Timer	2-60	MIN	lagstop	10
PRESTART FAULT Timer	2-30	MIN	preflt	5
STANDBY Chiller Option	0/1	DSABLE/ENABLE	stndopt	DSABLE
STANDBY Percent Capacity	25-57	%	stnd__per	50
STANDBY Address	1-236		stnd__add	93

NOTE: No variables are available for CCN read or write operation.

Table 2 — CVC Display Data (cont)

EXAMPLE 20 — RAMP_DEM DISPLAY SCREEN

To access this display from the **CVC default** screen:

1. Press **MENU** .
2. Press **SERVICE** .
3. Scroll down to highlight **EQUIPMENT SERVICE** .
4. Press **SELECT** .
5. Scroll down to highlight **RAMP_DEM** .

DESCRIPTION	STATUS	UNITS	POINT	DEFAULT
Pulldown Ramp Type:	0/1		ramp__opt	1
Select: Temp=0, Load=1				
Demand Limit + kW Ramp				
Demand Limit Source	0/1		dem__src	0
Select: Amps=0, kW=1				
Motor Load Ramp %/Min	5-20		kw__ramp	10
Demand Limit Prop Band	3-15	%	dem__prop	10
Demand Limit At 20 mA	40-100	%	dem__20ma	40
20mA Demand Limit Opt	0/1	DS/ENABLE	dem__sel	DSABLE
Motor Rated Kilowatts	50-9999	kW	motor__kw	145
Demand Watts Interval	5-60	MIN	dw__int	15

NOTE: No variables are available for CCN read or write operation.

EXAMPLE 20 — TEMP_CTL DISPLAY SCREEN

To access this display from the **CVC default** screen:

1. Press **MENU** .
2. Press **SERVICE** .
3. Scroll down to highlight **EQUIPMENT SERVICE** .
4. Press **SELECT** .
5. Scroll down to highlight **TEMP_CTL** .

DESCRIPTION	STATUS	UNITS	POINT	DEFAULT
Control Point				
EWB Control Option	0/1	DSABLE/ENABLE	ecw__opt	DSABLE
Temp Pulldown Deg/Min	2-10	^F	tmp__ramp	3
Temperature Reset				
RESET TYPE 1				
Degrees REset At 20 mA	−30- 30	^F	deg__20ma	10
RESET TYPE 2				
Remote Temp (No Reset)	−40-245	DEG F	res__rt1	85
Remote Temp (Full Reset)	_40-245	DEG F	res__rt2	65
Degrees Reset	−30-30	^F	deg__rt	10
RESET TYPE 3				
CHW Delta T (No Reset)	0-15	^F	restd__1	10
CHW Delta T (Full Reset)	0-15	^F	restd__2	0
Degrees Reset	−30-30	^F	deg__chw	5
Select/Enable Reset Type	0-3		res__sel	0

PIC II System Functions

NOTE: Words not part of paragraph headings and printed in all capital letters can be viewed on the CVC (e.g., LOCAL, CCN, RUNNING, ALARM, etc.). Words printed in *both* in all capital letters and italics can also be viewed on the CVC and are parameters (*CONTROL MODE, COOLING SET POINT, TARGET GUIDE VANE POS*, etc.) with associated values (e.g., modes, temperatures, pressures, percentages, on, off, enable, disable, etc.). Works printed in all capital letters and in a box represent softkeys on the CVC (e.g., ENTER and EXIT). See Table 2 for examples of the type of information that can appear on the CVC screens. Figures 12-18 give an overview of CVC operations and menus.

CAPACITY CONTROL — The PIC II controls the chiller capacity by modulating the inlet guide vanes in response to chilled water temperature changes away from the *CONTROL POINT*. The *CONTROL POINT* may be changed by a CCN network device or is determined by the PIC II adding any active chilled water reset to the *SET POINT*. The PIC II uses the *PROPORTIONAL INC (Increase) BAND, PROPORTIONAL DEC (Decrease) BAND*, and the *PROPORTIONAL ECW (Entering Chilled Water) GAIN* to determine how fast or slow to respond. *CONTROL POINT* may be viewed or overridden from the MAINSTAT screen.

ECW CONTROL OPTION — If this option is enabled, the PIC II uses the *ENTERING CHILLED WATER* temperature to modulate the vanes instead of the *LEAVING CHILLED WATER* temperature. The *ECW CONTROL OPTION* may be viewed on the TEMP_CTL screen, which is accessed from the EQUIPMENT SERVICE screen.

CONTROL POINT DEADBAND — This is the tolerance range on the chilled water/brine temperature control point. If the water temperature goes outside the *CHILLED WATER DEADBAND*, the PIC II opens or closes the guide vanes until the temperature is within tolerance. The PIC II may be configured with a 0.5 to 2 F (0.3 to 1.1 C) deadband. *CHILLED WATER DEADBAND* may be viewed or modified on the SETUP1 screen, which is accessed from the EQUIPMENT SERVICE table.

For example, a 1° F (0.6° C) deadband setting controls the water temperature within ±0.5° F (0.3° C) of the control point. This may cause frequent guide vane movement if the chilled water load fluctuates frequently. A value of 1° F (0.6° C) is the default setting.

DIFFUSER CONTROL — On 19XR compressors equipped with a variable discharge diffuser, the PIC II adjusts the diffuser actuator position (*DIFFUSER ACTUATOR* on the COMPRESS screen) to correspond to the actual guide vane position *(ACTUAL GUIDE VANE POS* on the COMPRESS screen).

The diffuser control can be enabled or disabled from the SETUP2 screen. See Table 2, Example 18. In addition, the diffuser and guide vane load points may be viewed and modified from this screen. These points must be correct for the compressor size. The diffuser opening can be incremented from fully open to completely closed. A 0% setting is fully open; a 100% setting is completely closed. To obtain the proper settings for Diffuser Control, contact a Carrier Engineering representative.

PROPORTIONAL BANDS AND GAIN — Proportional band is the rate at which the guide vane position is corrected in proportion to how far the chilled water/brine temperature is from the control point. Proportional gain determines how quickly the guide vanes react to how quickly the temperature is moving from the *CONTROL POINT*. The proportional bands and gain may be viewed or modified from the SETUP2 screen, which is accessed from the EQUIPMENT SERVICE table.

The Proportional Band — There are two response modes, one for temperature response above the control point, the other for the response below the control point.

The temperature response above the control point is called the *PROPORTIONAL INC BAND*, and it can slow or quicken guide vane response to chilled water/brine temperatures above the *DEADBAND*. The *PROPORTIONAL INC BAND* can be adjusted from a setting of 2 to 10; the default setting is 6.5.

The response below the control point is called the *PROPORTIONAL DEC BAND*, and it can slow or quicken the guide vane response to chilled water temperature below the deadband plus the control point. The *PROPORTIONAL DEC BAND* can be adjusted on the CVC from a setting of 2 to 10. The default setting is 6.0.

NOTE: Increasing either of these settings causes the guide vanes to respond more slowly than they would at a lower setting.

The *PROPORTIONAL ECW GAIN* can be adjusted on the CVC display for values of 1, 2, or 3; the default setting is 2. Increase this setting to increase guide vane response to a change in entering chilled water temperature.

DEMAND LIMITING — The PIC II responds to the *ACTIVE DEMAND LIMIT* set point by limiting the opening of the guide vanes. It compares the *ACTIVE DEMAND LIMIT* set point to the *DEMAND LIMIT SOURCE* (either the *AVERAGE LINE CURRENT* or the *MOTOR KW)*. Depending on how the control is configured. *DEMAND LIMIT SOURCE* is on the RAMP_DEM screen. The default source is the compressor motor current.

CHILLER TIMERS — The PIC II maintains 2 runtime clocks, known as *COMPRESSOR ONTIME* and *SERVICE ONTIME*. *COMPRESSOR ONTIME* indicates the total lifetime compressor run hours. This timer can register up to 500,000 hours before the clock turns back to zero. The *SERVICE ONTIME* is a reset table timer that can be used to indicate the hours since the last service visit or any other event. The time can be changed from the CVC to whatever value is desired. This timer can register up to 32,767 hours before it rolls over to zero.

The chiller also maintains a start-to-start timer and a stop-to-start timer. These timers limit how soon the chiller can be started. *START INHIBIT TIMER* is displayed on the MAINSTAT screen. See the Start-Up/Shutdown/Recycle Sequence section, page 44, for more information on this topic.

OCCUPANCY SCHEDULE — The chiller schedule, described in the Time Schedule Operation section (page 19), determines when the chiller can run. Each schedule consists of from 1 to 8 occupied or unoccupied time periods, set by the operator. The chiller can be started and run during an occupied time period (when *OCCUPIED ?* is set to YES on the MAINSTAT display screen). It cannot be started or run during an unoccupied time period (when *OCCUPIED ?* is set to NO on the MAINSTAT display screen). These time periods can be set for each day of the week and for holidays. The day begins with 0000 hours and ends with 2400 hours. The default setting for *OCCUPIED ?* is YES, unless an unoccupied time period is in effect.

These schedules can be set up to follow a building's occupancy schedule, or the chiller can be set so to run 100% of the time, if the operator wishes. The schedules also can be bypassed by forcing the *CHILLER START/STOP* parameter on the MAINSTAT screen to START. For more information on forced starts, see Local Start-Up, page 44.

The schedules also can be overridden to keep the chiller in an occupied state for up to 4 hours, on a one time basis. See the Time Schedule Operation section, page 19.

Figure 17 shows a schedule for a typical office building with a 3-hour, off-peak, cool-down period from midnight to 3 a.m., following a weekend shutdown. Holiday periods are in an unoccupied state 24 hours per day. The building operates Monday through Friday, 7:00 a.m. to 6:00 p.m., and Saturdays from 6:00 a.m. to 1:00 p.m. This schedule also includes the Monday midnight to 3:00 a.m. weekend cool-down schedule.

NOTE: This schedule is for illustration only and is not intended to be a recommended schedule for chiller operation.

Whenever the chiller is in the LOCAL mode, it uses Occupancy Schedule 01 (OCCPC01S). When the chiller is in the ICE BUILD mode, it uses Occupancy Schedule 02 (OCCPC02S). When the chiller is in CCN mode, it uses Occupancy Schedule 03 (OCCPC03S).

The CCN *SCHEDULE NUMBER* is configured on the NET_OPT display screen, accessed from the EQUIPMENT CONFIGURATION table. See Table 2, Example 14. *SCHEDULE NUMBER* can be changed to any value from 03 to 99. If this number is changed on the NET_OPT screen, the operator must go to the ATTACH TO NETWORK DEVICE screen to upload the new number into the SCHEDULE screen. See Fig. 16.

Safety Controls — The PIC II monitors all safety control inputs and, if required, shuts down the chiller or limits the guide vanes to protect the chiller from possible damage from any of the following conditions:

- high bearing temperature
- high motor winding temperature
- high discharge temperature
- low discharge superheat*
- low oil pressure
- low cooler refrigerant temperature/pressure
- condenser high pressure or low pressure
- inadequate water/brine cooler and condenser flow
- high, low, or loss of voltage
- ground fault
- voltage imbalance
- current imbalance
- excessive motor acceleration time
- excessive starter transition time
- lack of motor current signal
- excessive motor amps
- excessive compressor surge
- temperature and transducer faults

*Superheat is the difference between saturation temperature and sensible temperature. The high discharge temperature safety measures only sensible temperature.

Starter faults or optional protective devices within the starter can shut down the chiller. The protective devices you have for your application depend on what options were purchased.

⚠ CAUTION

If compressor motor overload occurs, check the motor for grounded or open phases before attempting a restart.

If the PIC II control initiates a safety shutdown, it displays the reason for the shutdown (the fault) on the CVC display screen along with a primary and secondary message, energizes an alarm relay in the starter, and blinks the alarm light on the control panel. The alarm is stored in memory and can be viewed on the ALARM HISTORY and ISM_HIST screens on the CVC, along with a message for troubleshooting. If the safety shutdown was also initiated by a fault detected in the motor starter, the conditions at the time of the fault will be stored in ISM_HIST.

To give more precise information or warnings on the chiller's operating condition, the operator can define alert limits on various monitored inputs. Safety contact and alert limits are defined in Table 3. Alarm and alert messages are listed in the Troubleshooting Guide section, page 69.

Table 3 — Protective Safety Limits and Control Settings

MONITORED PARAMETER	LIMIT	APPLICABLE COMMENTS
TEMPERATURE SENSORS OUT OF RANGE	–40 to 245 F (–40 to 118.3 C)	Must be outside range for 2 seconds
PRESSURE TRANSDUCERS OUT OF RANGE	0.06 to 0.98 Voltage Ratio	Must be outside range for 3 seconds. Ratio = Input Voltage ÷ Voltage Reference
COMPRESSOR DISCHARGE TEMPERATURE	>220 F (104.4 C)	Preset, alert setting configurable
MOTOR WINDING TEMPERATURE	>220 F (104.4 C)	Preset, alert setting configurable
BEARING TEMPERATURE	>185 F (85 C)	Preset, alert setting configurable
EVAPORATOR REFRIGERANT TEMPERATURE	<33 F (for water chilling) (0.6° C)	Preset, configure chilled medium for water (SETUP1 table)
	<EVAP REFRIG TRIPPOINT (set point adjustable from 0 to 40 F [–18 to 4 C] for brine chilling)	Configure chilled medium for brine (SETUP1 table). Adjust *EVAP REFRIG TRIPPOINT* for proper cutout
TRANSDUCER VOLTAGE	<4.5 vdc > 5.5 vdc	Preset
CONDENSER PRESSURE — SWITCH	>263 ± 7 psig (1813 ± 48 kPa), reset at 180 ± 10 (1241 ± 69 kPa)	Preset
— CONTROL	165 psig (1138 kPa)	Preset
OIL PRESSURE	Cutout <15 psid (103 kPad) Alert <18 psid (124 kPad)	Preset
LINE VOLTAGE — HIGH	>110% for one minute	Preset, based on transformed line voltage to ISM. Also monitored at CVC and CCM power input.
— LOW	<90% for one minute or ≤85% for 3 seconds	
— SINGLE-CYCLE	<50% for one cycle	
COMPRESSOR MOTOR LOAD	>110% for 30 seconds	Preset
	<15% with compressor running	Preset
	>15% with compressor off	Preset
STARTER ACCELERATION TIME (Determined by inrush current going below 100% compressor motor load)	>45 seconds	For chillers with reduced voltage mechanical and solid-state starters
	>10 seconds	For chillers with full voltage starters (Configured on ISM_CONFIG table)
STARTER TRANSITION	>75 seconds	Reduced voltage starters only
CONDENSER FREEZE PROTECTION	Energizes condenser pump relay if condenser refrigerant temperature or condenser entering water temperature is below the configured condenser freeze point temperature. Deenergizes when the temperature is 5 F (3 C) above condenser freeze point temperature.	*CONDENSER FREEZE POINT* configured in SETUP1 table with a default setting of 34 F (1 C).
DISCHARGE SUPERHEAT	Minimum value calculated based on operating conditions and then compared to actual superheat.	Calculated minimum required superheat and actual superheat are shown on OVERRIDE screen.
VARIABLE DIFFUSER OPERATION	Detects discharge pulses caused by incorrect diffuser position.	Preset, no calibration needed.

Shunt Trip (Option) — The function of the shunt trip option on the PIC II is to act as a safety trip. The shunt trip is wired from an output on the ISM to a shunt trip equipped motor circuit breaker. If the PIC II tries to shut down the compressor using a normal shutdown procedure but is unsuccessful for 30 seconds, the shunt trip output is energized and causes the circuit breaker to trip off. If ground fault protection has been applied to the starter, the ground fault trip also energizes the shunt trip to trip the circuit breaker. Protective devices in the starter can also energize the shunt trip. The shunt trip feature can be tested using the Control Test feature.

Default Screen Freeze — When the chiller is in an alarm state, the default CVC display ''freezes,'' that is, it stops updating. The first line of the CVC default screen displays a primary alarm message; the second line displays a secondary alarm message.

The CVC default screen freezes to enable the operator to see the conditions of the chiller *at the time of the alarm.* If the value in alarm is one normally displayed on the default screen, it flashes between normal and reverse video. The CVC default screen remains frozen until the condition that caused the alarm is remedied by the operator.

Knowledge of the operating state of the chiller at the time an alarm occurs is useful when troubleshooting. Additional chiller information can be viewed on the status screens and the ISM_HIST screen. Troubleshooting information is recorded in the ALARM HISTORY table, which can be accessed from the SERVICE menu.

To determine what caused the alarm, the operator should read both the primary and secondary default screen messages, as well as the alarm history. The primary message indicates the most recent alarm condition. The secondary message gives more detail on the alarm condition. Since there may be more than one alarm condition, another alarm message may appear after the first condition is cleared. Check the ALARM HISTORY screen for additional help in determining the reasons for the alarms. Once all existing alarms are cleared (by pressing the RESET softkey), the default CVC display returns to normal operation.

Ramp Loading — The ramp loading control slows down the rate at which the compressor loads up. This control can prevent the compressor from loading up during the short period of time when the chiller is started and the chilled water loop has to be brought down to *CONTROL POINT.* This helps reduce electrical demand charges by slowly bringing the chilled water to *CONTROL POINT.* The total power draw during this period remains almost unchanged.

There are two methods of ramp loading with the PIC II. Ramp loading can be based on chilled water temperature or on motor load. Either method is selected from the RAMP__DEM screen.

1. Temperature ramp loading *(TEMP PULLDOWN DEG/MIN)* limits the degrees per minute rate at which either leaving chilled water or entering chilled water temperature decreases. This rate is configured by the operator on the TEMP_CTL screen. The lowest temperature ramp rate will also be used if chiller power has been off for 3 hours or more (even if the motor ramp load is selected as the ramp loading method.
2. Motor load ramp loading *(LOAD PULLDOWN)* limits the degrees per minute rate at which the compressor motor current or compressor motor load increases. The *LOAD PULLDOWN* rate is configured by the operator on the RAMP_DEM screen in amps or kilowatts.

If kilowatts is selected for the *DEMAND LIMIT SOURCE*, the *MOTOR RATED KILOWATTS* must be entered (information found on the chiller Requisition form).

The *TEMP PULLDOWN DEG/MIN* may be viewed or modified on the TEMP_CTL screen which is accessed from the EQUIPMENT SERVICE screen. *PULLDOWN RAMP TYPE, DEMAND LIMIT SOURCE,* and *MOTOR LOAD RAMP %/MIN* may be viewed or modified on the RAMP_DEM screen.

Capacity Override (Table 4) — Capacity overrides can prevent some safety shutdowns caused by exceeding the motor amperage limit, refrigerant low temperature safety limit, motor high temperature safety limit, and condenser high pressure limit. In all cases there are 2 stages of compressor vane control.

1. The vanes are prevented from opening further, and the status line on the CVC indicates the reason for the override.
2. The vanes are closed until the condition decreases to below the first step set point. Then the vanes are released to normal capacity control.

Whenever the motor current demand limit set point (*ACTIVE DEMAND LIMIT*) is reached, it activates a capacity override, again, with a 2-step process. Exceeding 110% of the rated load amps for more than 30 seconds will initiate a safety shutdown.

The compressor high lift (surge prevention) set point will cause a capacity override as well. When the surge prevention set point is reached, the controller normally will only prevent the guide vanes from opening. If so equipped, the hot gas bypass valve will open instead of holding the vanes. See the Surge Prevention Algorithm section, page 38.

High Discharge Temperature Control — If the discharge temperature increases above 160 F (71.1 C), the guide vanes are proportionally opened to increase gas flow through the compressor. If the leaving chilled water temperature is then brought 5° F (2.8° C) below the control set point temperature, the PIC II will bring the chiller into the recycle mode.

Oil Sump Temperature Control — The oil sump temperature control is regulated by the PIC II, which uses the oil heater relay when the chiller is shut down.

As part of the pre-start checks executed by the controls, the oil sump temperature (*OIL SUMP TEMP*) is compared to the cooler refrigerant temperature (*EVAPORATOR REFRIG TEMP*). If the difference between these 2 temperatures is 50 F (27.8 C) or less, the start-up will be delayed until the oil temperature is 50 F (27.8 C) or more. Once this temperature is confirmed, the start-up continues.

The oil heater relay is energized whenever the chiller compressor is off and the oil sump temperature is less than 140 F (60.0 C) or the oil sump temperature is less than the cooler refrigerant temperature plus 53° F (11.7° C). The oil heater is turned off when the oil sump temperature is either

- more than 152 F (66.7 C), or
- more than 142 F (61.1 C) and more than the cooler refrigerant temperature plus 55° F (12.8° C).

The oil heater is always off during start-up or when the compressor is running.

The oil pump is also energized during the time the oil is being heated (for 60 seconds at the end of every 30 minutes).

Table 4 — Capacity Overrides

OVERRIDE CAPACITY CONTROL	FIRST STAGE SET POINT			SECOND STAGE SET POINT	OVERRIDE TERMINATION
	View/Modify on CVC Screen	Default Value	Configurable Range	Value	Value
HIGH CONDENSER PRESSURE	SETUP1	125 psig (862 kPa)	90 to 165 psig (620 to 1138 kPa)	>Override Set Point + 2.4 psid (16.5 kPad)	<Override Set Point
HIGH MOTOR TEMPERATURE	SETUP1	>200 F (93.3 C)	150 to 200 F (66 to 93 C)	>Override Set Point +10° F (6° C)	<Override Set Point
LOW REFRIGERANT TEMPERATURE (Refrigerant Override Delta Temperature)	SETUP1	3° F (1.6° C)	2° to 5° F (1° to 3° C)	⩽Trippoint + Override ΔT –1° F (0.56° C)	>Trippoint + Override ΔT +2° F (1.2° C)
HIGH COMPRESSOR LIFT (Surge Prevention)	OPTIONS	Min: T1 — 1.5° F (0.8° C) P1 — 50 psid (345 kPad) Max: T2 — 10° F (5.6° C) P2 — 85 psid (586 kPad)	0.5° to 15° F (0.3° to 8.3° C) 30 to 170 psid (207 to1172 kPad) 0.5° to 15° F (0.3° to 8.3° C) 50 to 170 psid (348 to 1172 kPad)	None	Within Lift Limits Plus Surge/HGBP Deadband Setting
MANUAL GUIDE VANE TARGET	CAPACITY	Automatic	0 to 100%	None	Release of Manual Control
MOTOR LOAD — ACTIVE DEMAND LIMIT	MAINSTAT	100%	40 to 100%	⩾5% of Set Point	2% Lower Than Set Point
LOW DISCHARGE SUPERHEAT	OVERRIDE	Calculated Minimum Superheat for Conditions	None	2° F (1.1° C) Below Calculated Minimum Superheat	1° F (0.56° C) Above Calculated Minimum Superheat

Oil Cooler — The oil must be cooled when the compressor is running. This is accomplished through a small, plate-type heat exchanger (also called the oil cooler) located behind the oil pump. The heat exchanger uses liquid condenser refrigerant as the cooling liquid. Refrigerant thermostatic expansion valves (TXVs) regulate refrigerant flow to control the oil temperature entering the bearings. The bulbs for the expansion valves are strapped to the oil supply line leaving the heat exchanger, and the valves are set to maintain 110 F (43 C).

NOTE: The TXVs are not adjustable. The oil sump temperature may be at a lower temperature during compressor operations.

Remote Start/Stop Controls — A remote device, such as a timeclock that uses a set of contacts, may be used to start and stop the chiller. However, the device should not be programmed to start and stop the chiller in excess of 2 or 3 times every 12 hours. If more than 8 starts in 12 hours (the *STARTS IN 12 HOURS* parameter on the MAINSTAT screen) occur, an excessive starts alarm displays, preventing the chiller from starting. The operator must press the RESET softkey on the CVC to override the starts counter and start the chiller. If the chiller records 12 starts (excluding recycle starts) in a sliding 12-hour period, it can be restarted only by pressing the RESET softkey followed by the LOCAL or CCN softkey. This ensures that, if the automatic system is malfunctioning, the chiller will not repeatedly cycle on and off. If the automatic restart after a power failure option (*AUTO RESTART OPTION* on the OPTIONS screen) is not activated when a power failure occurs, and if the remote contact is closed, the chiller will indicate an alarm because of the loss of voltage.

The contacts for remote start are wired into the starter at terminal strip J2, terminals 5 and 6 on the ISM. See the certified drawings for further details on contact ratings. The contacts must have 24 vac rating.

Spare Safety Inputs — Normally closed (NC) discrete inputs for additional field-supplied safeties may be wired to the spare protective limits input channel in place of the factory-installed jumper. (Wire multiple inputs in series.) The opening of any contact will result in a safety shutdown and a display on the CVC. Refer to the certified drawings for safety contact ratings.

Analog temperature sensors may also be added to the module (SPARE TEMP #1 and #2). The analog temperature sensors may be configured to cause an alert or alarm on the CCN network. The alert will not shut the chiller down. Configuring for alarm state will cause the chiller to shut down.

Spare Safety Alarm Contacts — One set of alarm contacts is provided in the starter. The contact ratings are provided in the certified drawings. The contacts are located on terminal strip JP, terminals 15 and 16.

Refrigerant Leak Detector — An input is available on the CCM module [terminal 15-5 (−) and J5-6 (+)] for a refrigerant leak detector. Enabling *REFRIGERANT LEAK OPTION* (OPTIONS screen) will allow the PIC II controls to go into an alarm state at a user configured level (REFRIGERANT LEAK ALARM mA). The input is configured for 4 to 20 mA by setting the DIP switch 1 on SW2 at the ON position, or configured for 0 to 5 vdc by setting switch 1 at the OFF position. The output of the refrigerant leak detector is displayed as *REFRIGERANT LEAK SENSOR* on the MAINSTAT screen. For a 0 to 5 vcd input, 0 vdc input represents 4 mA displayed and 5 vdc input represents 20 mA displayed.

Condenser Pump Control — The chiller will monitor the condenser pressure (*CONDENSER PRESSURE*) and may turn on the condenser pump if the condenser pressure becomes too high while the compressor is shut down. The condenser pressure override (*COND PRESS OVERRIDE*) parameter is used to determine this pressure point. *COND PRESS OVERRIDE* is found in the SETUP1 display screen, which is accessed from the EQUIPMENT SERVICE table. The default value is 125 psig (862 kPa).

If the *CONDENSER PRESSURE* is greater than or equal to the *COND PRESS OVERRIDE*, and the entering condenser water temperature (*ENTERING CONDENSER WATER)* is less than 115 F (46 C), the condenser pump will

energize to try to decrease the pressure. The pump will turn off when the condenser pressure is 3.5 psi (24.1 kPa) less than the pressure override or when the condenser refrigerant temperature (*CONDENSER REFRIG TEMP)* is within 3° F (1.7° C) of the entering condenser water temperature (*ENTERING CONDENSER WATER*).

Condenser Freeze Prevention — This control algorithm helps prevent condenser tube freeze-up by energizing the condenser pump relay. The PIC II controls the pump and, by starting it, helps to prevent the water in the condenser from freezing. The PIC II can perform this function whenever the chiller is not running *except* when it is either actively in pumpdown or in pumpdown/lockout with the freeze prevention disabled.

When the *CONDENSER REFRIG TEMP* is less than or equal to the *CONDENSER FREEZE POINT*, the *CONDENSER WATER PUMP* is energized until the *CONDENSER REFRIG TEMP* is greater than the *CONDENSER FREEZE POINT* plus 5° F (2.7° C) and the *ENTERING CONDENSER WATER TEMPERATURE* is less than or equal to the *CONDENSER FREEZE POINT*. An alarm is generated if the chiller is in PUMPDOWN mode and the pump is energized. An alert is generated if the chiller is not in PUMPDOWN mode and the pump is energized. If the chiller is in RECYCLE SHUTDOWN mode, the mode will transition to a non-recycle shutdown.

Tower Fan Relay Low and High — Low condenser water temperature can cause the chiller to shut down when refrigerant temperature is low. The tower fan relays, located in the starter, are controlled by the PIC II to energize and deenergize as the pressure differential between cooler and condenser vessels changes. This prevents low condenser water temperature and maximizes chiller efficiency. The tower fan relay can only accomplish this if the relay has been added to the cooling tower temperature controller.

The tower fan relay low is turned on whenever the condenser water pump is running, flow is verified, and the difference between cooler and condenser pressure is more than 30 psid (207 kPad) for entering condenser water temperature greater than 65 F (18.3 C).

The tower fan relay low is turned off when the condenser pump is off, flow is stopped, or the cooler refrigerant temperature is less than the override temperature for *ENTERING CONDENSER WATER* temperature less than 62 F (16.7 C), or the differential pressure is less than 25 psid (172.4 kPad) for entering condenser water less than 80 F (27 C).

The tower fan relay high is turned on whenever the condenser water pump is running, flow is verified and the difference between cooler and condenser pressure is more than 35 psid (241.3 kPa) for entering condenser water temperature greater than the *TOWER FAN HIGH SETPOINT* (SETPOINT menu, default 75 F [23.9 C]).

The tower fan relay high is turned off when the condenser pump is off, flow is stopped, or the cooler refrigerant temperature is less than the override temperature and *ENTERING CONDENSER WATER* is less than 70 F (21.1 C), or the difference between cooler and condenser pressure is less than 28 Psid (193 kPa), or *ENTERING CONDENSER WATER* temperature is less than *TOWER FAN HIGH SETPOINT* minus 3 F (−16.1 C).

The *TOWER FAN RELAY LOW* and *HIGH* parameter is accessed from the STARTUP screen.

IMPORTANT: A field-supplied water temperature control system for condenser water should be installed. The system should maintain the leaving condenser water temperature at a temperature that is 20° F (11° C) above the leaving chilled water temperature.

⚠ CAUTION

The tower fan relay control is not a substitute for a condenser water temperature control. When used with a water temperature control system, the tower fan relay control can be used to help prevent low condenser water temperatures.

Auto. Restart After Power Failure — This option may be enabled or disabled and may be viewed or modified on the OPTIONS screen, which is accessed from the EQUIPMENT CONFIGURATION table. If the *AUTO. RESTART* option is enabled, the chiller will start up automatically after a power failure has occurred (after a single cycle dropout; low, high, or loss of voltage; and the power is within ± 10% of normal). The 15- and 3-minute inhibit timers are ignored during this type of start-up.

When power is restored after the power failure and if the compressor had been running, the oil pump will energize for one minute before energizing the cooler pump. *AUTO. RESTART* will then continue like a normal start-up.

If power to the CVC module has been off for more than 3 hours or the timeclock has been set for the first time, start the compressor with the slowest temperature-based ramp load rate possible in order to minimize oil foaming.

The oil pump is energized occasionally during the time the oil is being brought up to proper temperature in order to eliminate refrigerant that has migrated to the oil sump during the power failure. The pump turns on for 60 seconds at the end of every 30-minute period until the chiller is started.

Water/Brine Reset — Three types of chilled water or brine reset are available and can be viewed or modified on the TEMP_CTL screen, which is accessed from the EQUIPMENT SERVICE table.

The CVC default screen indicates when the chilled water reset is active. RESET TEMPERATURE on the MAINSTAT screen indicates the amount of reset. The CONTROL POINT will be determined by adding the RESET TEMPERATURE to the SETPOINT.

To activate a reset type, access the TEMP_CTL screen and input all configuration information for that reset type. Then, input the reset type number (1, 2, or 3) in the SELECT/ENABLE RESET TYPE input line.

RESET TYPE 1: 4 to 20 mA (0 to 5 vdc) TEMPERATURE RESET — Reset Type 1 is an automatic chilled water temperature reset based on a remote temperature sensor input configured for either an externally powered 4 to 20 mA or a 0 to 5 vcd signal. Reset Type 1 permits up to ±30 F (±16 C) of automatic reset to the chilled water set point.

The auto, chilled water reset is hardwired to terminals J5-3 (−) and J5-4 (+) on the CCM. Switch setting number 2 on SW2 will determine the type of input signal. With the switch set at the ON position the input is configured for an externally powered 4 to 20 mA signal. With the switch in the OFF position the input is configured for an external 0 to 5 vdc signal.

RESET TYPE 2: REMOTE TEMPERATURE RESET — Reset Type 2 is an automatic chilled water temperature reset based on a remote temperature sensor input signal. Reset Type 2 permits ± 30° F (± 16° C) of automatic reset to the set point based on a temperature sensor wired to the CCM module (see wiring diagrams or certified drawings). The temperature sensor must be wired to terminal J4-13 and J4-14.

To configure Reset Type 2, enter the temperature of the remote sensor at the point where no temperature reset will occur (*REMOTE TEMP [NO RESET]*). Next, enter the temperature at which the full amount of reset will occur

(*REMOTE TEMP [FULL RESET]*). Then, enter the maximum amount of reset required to operate the chiller (*DEGREES RESET*). Reset Type 2 can now be activated.

RESET TYPE 3 — Reset Type 3 is an automatic chilled water temperature reset based on cooler temperature difference. Reset Type 3 adds ± 30° F (± 16° C) based on the temperature difference between the entering and leaving chilled water temperature.

To configure Reset Type 3, enter the chilled water temperature difference (the difference between entering and leaving chilled water) at which no temperature reset occurs (*CHW DELTA T [NO RESET]*). This chilled water temperature difference is usually the full design load temperature difference. Next, enter the difference in chilled water temperature at which the full amount of reset occurs (*CHW DELTA T [FULL RESET]*). Finally, enter the amount of reset (*DEGREES RESET*). Reset Type 3 can now be activated.

Demand Limit Control Option — The demand limit control option (*20 mA DEMAND LIMIT OPT*) is externally controlled by a 4 to 20 mA or 0 to 5 vdc signal from an energy management system (EMS). The option is set up on the RAMP_DEM screen. When enabled, 4 mA is the 100% demand set point with an operator-configured minimum demand at a 20 mA set point (*DEMAND LIMIT AT 20 mA*).

The auto. demand limit is hardwired to terminals J5-5 (−) and J5-6 (+) on the CCM. Switch setting number 1 on SW2 will determine the type of input signal. With the switch set at the ON position the input is configured for an externally powered 4 to 20 mA signal. With the switch in the OFF position the input is configured for an external 0 to 5 vdc signal.

Surge Prevention Algorithm — This is an operator-configurable feature that can determine if lift conditions are too high for the compressor and then take corrective action. Lift is defined as the difference between the pressure at the impeller eye and at the impeller discharge. The maximum lift a particular impeller wheel can perform varies with the gas flow across the impeller and the size of the wheel.

A surge condition occurs when the lift becomes so high the gas flow across the impeller reverses. This condition can eventually cause chiller damage. The surge prevention algorithm notifies the operator that chiller operating conditions are marginal and to take action to help prevent chiller damage such as lowering entering condenser water temperature.

The surge prevention algorithm first determines if corrective action is necessary. The algorithm checks 2 sets of operator-configured data points, the minimum load points (*MIN. LOAD POINT [T1/P1]*) and the full load points (*FULL LOAD POINT [T2/P2]*). These points have default settings as defined on the OPTIONS screen or on Table 4.

The surge prevention algorithm function and settings are graphically displayed in Fig. 19 and 20. The two sets of load points on the graph (default settings are shown) describe a line the algorithm uses to determine the maximum lift of the compressor. When the actual differential pressure between the cooler and condenser and the temperature difference between the entering and leaving chilled water are above the line on the graph (as defined by the minimum and full load points), the algorithm goes into a corrective action mode. If the actual values are below the line and outside of the deadband region, the algorithm takes no action. When the point defined by the *ACTIVE DELTA P* and *ACTIVE DELTA T*, moves from the region where the HOT GAS BYPASS/SURGE PREVENTION is off, the point must pass through the deadband region to the line determined by the configured valves before the HOT GAS BYPASS/SURGE PREVENTION will be turned on. As the point moves from the region where the HOT GAS BYPASS/SURGE PREVENTION is on, the point must pass through the deadband region before the HOT GAS BYPASS/SURGE PREVENTION is turned off. Information on modifying the default set points of the minimum and full load points may be found in the Input Service Configurations section, page 53.

Corrective action can be taken by making one of 2 choices. If a hot gas bypass line is present and the hot gas option is selected on the OPTIONS table (*SURGE LIMIT/HGBP OPTION* is set to 1), the hot gas bypass valve can be energized. If the hot gas bypass option is not selected (*SURGE LIMIT/HGBP OPTION* is set to 0), hold the guide vanes. See Table 4, Capacity Overrides. Both of these corrective actions try to reduce the lift experienced by the compressor and help prevent a surge condition.

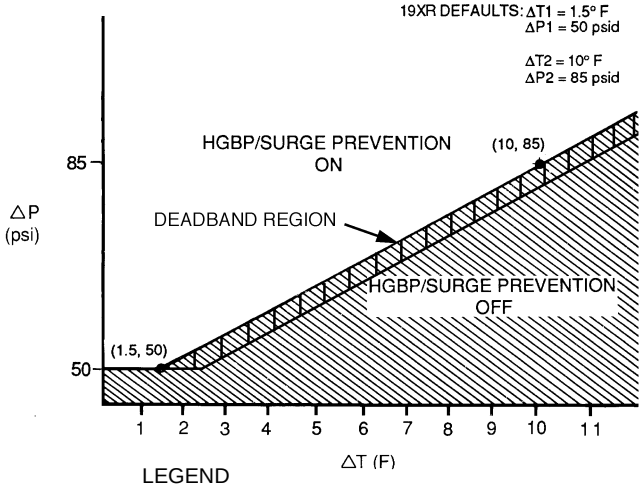

LEGEND

ECW — Entering Chilled Water
HGBP — Hot Gas Bypass
LCW — Leaving Chilled Water
ΔP = (Condenser Psi) − (Cooler Psi)
ΔT = (ECW) − (LCW)

Fig. 19 — 19XR Hot Gas Bypass/Surge Prevention with Default English Settings

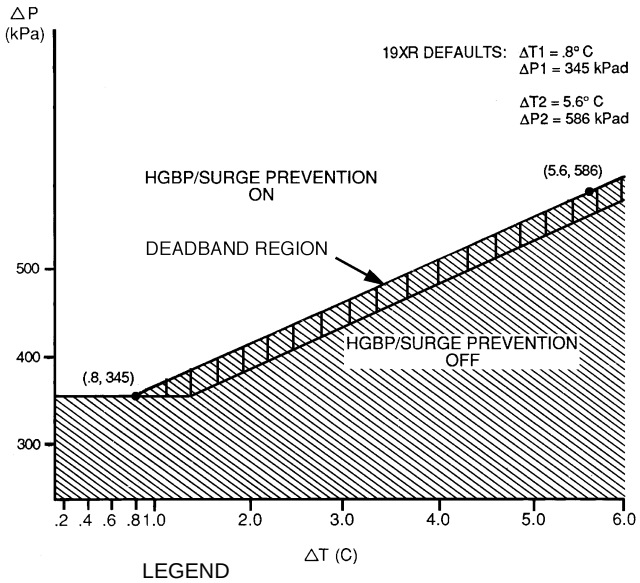

LEGEND

ECW — Entering Chilled Water
HGBP — Hot Gas Bypass
LCW — Leaving Chilled Water
ΔP = (Condenser kPa) − (Cooler kPa)
ΔT = (ECW) − (LCW)

Fig. 20 — 19XR Hot Gas Bypass/Surge Prevention with Default Metric Settings

Surge Protection — The PIC II monitors surge, which is a fluctuation in compressor motor amperage. Each time the fluctuation exceeds an operator-specified limit (*SURGE DELTA % AMPS*), the PIC II counts the surge. If more than 5 surges occur within an operator-specified time (*SURGE TIME PERIOD*), the PIC II initiates a surge protection shutdown of the chiller.

The surge limit can be adjusted from the OPTIONS screen. Scroll down to the *SURGE DELTA % AMPS* parameter, and use the INCREASE or DECREASE softkey to adjust the percent of surge. The default setting is 10% amps.

The surge time period can also be adjusted from the OPTIONS screen. Scroll to the *SURGE TIME PERIOD* parameter, and use the INCREASE or DECREASE softkey to adjust the amount of time. The default setting is 8 minutes.

Access the display screen (COMPRESS) to monitor the surge count (*SURGE PROTECTION COUNTS*).

Lead/Lag Control — The lead/lag control system automatically starts and stops a lag or second chiller in a 2-chiller water system. A third chiller can be added to the lead/lag system as a standby chiller to start up in case the lead or lag chiller in the system has shut down during an alarm condition and additional cooling is required. Refer to Fig. 15 and 16 for menu, table, and screen selection information.

NOTE: The lead/lag function can be configured on the LEADLAG screen, which is accessed from the SERVICE menu and EQUIPMENT SERVICE table. See Table 2, Example 19. Lead/lag status during chiller operation can be viewed on the LL_MAINT display screen, which is accessed from the SERVICE menu and CONTROL ALGORITHM STATUS table. See Table 2, Example 11.

Lead/Lag System Requirements:

- all chillers in the system must have software capable of performing the lead/lag function
- water pumps MUST be energized from the PIC II controls
- water flows should be constant
- the CCN time schedules for all chillers must be identical

Operation Features:

- 2 chiller lead/lag
- addition of a third chiller for backup
- manual rotation of lead chiller
- load balancing if configured
- staggered restart of the chillers after a power failure
- chillers may be piped in parallel or in series chilled water flow

COMMON POINT SENSOR INSTALLATION — Lead/lag operation does not require a common chilled water point sensor. Common point sensors (Spare Temp #1 and #2) can be added to the CCM module, if desired. Spare Temp #1 and #2 are wired to plug J4 terminals 25-26 and 27-28 (J4 lower, respectively).

NOTE: If the common point sensor option is chosen on a chilled water system, each chiller should have its own common point sensor installed. Each chiller uses its own common point sensor for control when that chiller is designated as the lead chiller. The PIC II cannot read the value of common point sensors installed on the other chillers in the chilled water system.

If leaving chilled water control (*ECW CONTROL OPTION* is set to 0 [DSABLE] TEMP_CTL screen) and a common point sensor is desired (*COMMON SENSOR OPTION* in LEADLAG screen selected as 1) then the sensor is wired in Spare Temp #1 position on the CCM.

If the entering chilled water control option (*ECW CONTROL OPTION*) is enabled (configured in TEMP_CTL screen) and a common point sensor is desired (*COMMON SENSOR OPTION* in LEADLAG screen selected as 1) then the sensor is wired in Spare Temp #2 position on the CCM.

When installing chillers in series, a common point sensor should be used. If a common point sensor is not used, the leaving chilled water sensor of the upstream chiller must be moved into the leaving chilled water pipe of the downstream chiller.

If return chilled water control is required on chillers piped in series, the common point return chilled water sensor should be installed. If this sensor is not installed, the return chilled water sensor of the downstream chiller must be relocated to the return chilled water pipe of the upstream chiller.

To properly control the common supply point temperature sensor when chillers are piped in parallel, the water flow through the shutdown chillers must be isolated so no water bypass around the operating chiller occurs. The common point sensor option must not be used if water bypass around the operating chiller is occurring.

CHILLER COMMUNICATION WIRING — Refer to the chiller's Installation Instructions, Carrier Comfort Network Interface section for information on chiller communication wiring.

LEAD/LAG OPERATION — The PIC II not only has the ability to operate 2 chillers in lead/lag, but it can also start a designated standby chiller when either the lead or lag chiller is faulted and capacity requirements are not met. The lead/lag option only operates when the chillers are in CCN mode. If any other chiller configured for lead/lag is set to the LOCAL or OFF modes, it will be unavailable for lead/lag operation.

Lead/Lag Chiller Configuration and Operation

- A chiller is designated the lead chiller when its *LEAD/LAG CONFIGURATION* value on the LEADLAG screen is set to "1."
- A chiller is designated the lag chiller when its *LEAD/LAG CONFIGURATION* value is set to "2."
- A chiller is designated as a standby chiller when its *LEAD/LAG CONFIGURATION* value is set to "3."
- A value of "0" disables the lead/lag designation of a chiller.

To configure the *LAG ADDRESS* value on the LEADLAG screen, always enter the address of the other chiller on the system. For example, if you are configuring chiller A, enter the address for chiller B as the lag address. If you are configuring chiller B, enter the address for chiller A as the lag address. This makes it easier to rotate the lead and lag chillers.

If the address assignments in the *LAG ADDRESS* and *STANDBY ADDRESS* parameters conflict, the lead/lag function is disabled and an alert (!) message displays. For example, if the *LAG ADDRESS* matches the lead chiller's address, the lead/lag will be disabled and an alert (!) message displayed. The lead/lag maintenance screen (LL_MAINT) displays the message 'INVALID CONFIG' in the *LEAD/LAG CONFIGURATION* and *CURRENT MODE* fields.

The lead chiller responds to normal start/stop controls such as the occupancy schedule, a forced start or stop, and remote start contact inputs. After completing start-up and ramp loading, the PIC II evaluates the need for additional capacity. If additional capacity is needed, the PIC II initiates the start-up of the chiller configured at the *LAG ADDRESS*. If the lag chiller is faulted (in alarm) or is in the OFF or LOCAL modes, the chiller at the *STANDBY ADDRESS* (if configured) is requested to start. After the second chiller is started and is

running, the lead chiller monitors conditions and evaluates whether the capacity has been reduced enough for the lead chiller to sustain the system alone. If the capacity is reduced enough for the lead chiller to sustain the *CONTROL POINT* temperatures alone, then the operating lag chiller is stopped.

If the lead chiller is stopped in CCN mode for any reason other than an alarm (*) condition, the lag and standby chillers are also stopped. If the configured lead chiller stops for an alarm condition, the configured lag chiller takes the lead chiller's place as the lead chiller, and the standby chiller serves as the lag chiller.

If the configured lead chiller does not complete the start-up before the *PRESTART FAULT TIMER* (a user-configured value) elapses, then the lag chiller starts and the lead chiller shuts down. The lead chiller then monitors the start request from the acting lead chiller. The *PRESTART FAULT TIMER* is initiated at the time of a start request. The *PRESTART FAULT TIMER* provides a timeout if there is a prestart alert condition that prevents the chiller from starting in a timely manner. The *PRESTART FAULT TIMER* parameter is on the LEADLAG screen, which is accessed from the EQUIPMENT SERVICE table of the SERVICE menu.

If the lag chiller does not achieve start-up before the *PRESTART FAULT TIMER* elapses, the lag chiller stops, and the standby chiller is requested to start, if configured and ready.

Standby Chiller Configuration and Operation — A chiller is designated as a standby chiller when its *LEAD/LAG CONFIGURATION* value on the LEADLAG screen is set to ''3.'' The standby chiller can operate as a replacement for the lag chiller only if one of the other two chillers is in an alarm (*) condition (as shown on the CVC panel). If both lead and lag chillers are in an alarm (*) condition, the standby chiller defaults to operate in CCN mode, based on its configured occupancy schedule and remote contacts input.

Lag Chiller Start-Up Requirements — Before the lag chiller can be started, the following conditions must be met:

1. Lead chiller ramp loading must be complete.
2. Lead chilled water temperature must be greater than the *CONTROL POINT* temperature (see the MAINSTAT screen) plus 1/2 the *CHILLED WATER DEADBAND* temperature (see the SETUP1 screen).

   NOTE: The chilled water temperature sensor may be the leaving chilled water sensor, the return water sensor, the common supply water sensor, or the common return water sensor, depending on which options are configured and enabled.
3. Lead chiller *ACTIVE DEMAND LIMIT* (see the MAINSTAT screen) value must be greater than 95% of full load amps.
4. Lead chiller temperature pulldown rate (*TEMP PULLDOWN DEG/MIN* on the TEMP_CTL screen) of the chilled water temperature is less than 0.5° F (0.27° C) per minute.
5. The lag chiller status indicates it is in CCN mode and is not in an alarm condition. If the current lag chiller is in an alarm condition, the standby chiller becomes the active lag chiller, if it is configured and available.
6. The configured *LAG START TIMER* entry has elapsed. The *LAG START TIMER* starts when the lead chiller ramp loading is completed. The *LAG START TIMER* entry is on the LEADLAG screen, which is accessed from the EQUIPMENT SERVICE table of the SERVICE menu.

When all the above requirements have been met, the lag chiller is commanded to a STARTUP mode (SUPVSR flashing next to the point value on the STATUS table). The PIC II control then monitors the lag chiller for a successful start. If the lag chiller fails to start, the standby chiller, if configured is started.

Lag Chiller Shutdown Requirements — The following conditions must be met in order for the lag chiller to be stopped.

1. Lead chiller compressor motor average line current or load value (*MOTOR PERCENT KILOWATTS* on the MAINSTAT screen) is less than the lead chiller percent capacity.

   NOTE: Lead chiller percent capacity = 115 – *LAG PERCENT CAPACITY.* The *LAG PERCENT CAPACITY* parameter is on the LEADLAG screen, which is accessed from the EQUIPMENT SERVICE table on the SERVICE menu.
2. The lead chiller chilled water temperature is less than the *CONTROL POINT* temperature (see the MAINSTAT screen) plus ½ the *CHILLED WATER DEADBAND* temperature (see the SETUP1 screen).
3. The configured *LAG STOP TIME* entry has elapsed. The *LAG STOP TIMER* starts when the lead chiller chilled water temperature is less than the chilled water *CONTROL POINT* plus 1/2 of the *CHILLED WATER DEADBAND* and the lead chiller compressor motor load (*MOTOR PERCENT KILOWATT* or *AVERAGE LINE CURRENT* on the MAINSTAT screen) is less than the lead chiller percent capacity.

NOTE: Lead chiller percent capacity = 115 – *LAG PERCENT CAPACITY.* The *LAG PERCENT CAPACITY* parameter is on the LEADLAG screen, which is accessed from the EQUIPMENT SERVICE table on the SERVICE menu.

FAULTED CHILLER OPERATION — If the lead chiller shuts down because of an alarm (*) condition, it stops communicating to the lag and standby chillers. After 30 seconds, the lag chiller becomes the acting lead chiller and starts and stops the standby chiller, if necessary.

If the lag chiller goes into alarm when the lead chiller is also in alarm, the standby chiller reverts to a stand-alone CCN mode of operation.

If the lead chiller is in an alarm (*) condition (as shown on the CVC panel), press the RESET softkey to clear the alarm. The chiller is placed in CCN mode. The lead chiller communicates and monitors the RUN STATUS of the lag and standby chillers. If both the lag and standby chillers are running, the lead chiller does not attempt to start and does not assume the role of lead chiller until either the lag or standby chiller shuts down. If only one chiller is running, the lead chiller waits for a start request from the operating chiller. When the configured lead chiller starts, it assumes its role as lead chiller.

If the lag chiller is the only chiller running when the lead chiller assumes its role as a lead chiller then the lag chiller will perform a *RECOVERY START REQUEST* (LL_MAINT screen). The lead chiller will start up when the following conditions are met.

1. Lag chiller ramp loading must be complete.
2. Lag *CHILLED WATER TEMP* (MAINSTAT screen) is greater than *CONTROL POINT* plus 1/2 the *CHILLED WATER DEADBAND* temperature.
3. Lag chiller *ACTIVE DEMAND LIMIT* value must be greater than 95% of full load amps.
4. Lag chiller temperature pulldown rate (*TEMP PULLDOWN DEG/MIN*) of the chilled water temperature is less than 0.5 F (0.27 C) per minute.
5. The standby chiller is not running as a lag chiller.
6. The configured *LAG START TIMER* has elapsed. The *LAG START TIMER* is started when ramp loading is completed.

LOAD BALANCING — When the *LOAD BALANCE OPTION* (see LEADLAG screen) is enabled, the lead chiller sets the *ACTIVE DEMAND LIMIT* in the lag chiller to the lead chiller's compressor motor load value *MOTOR PERCENT KILOWATTS* or *AVERAGE LINE CURRENT* on the MAINSTAT screen). This value has limits of 40% to 100%. When the lag chiller *ACTIVE DEMAND LIMIT* is set, the *CONTROL POINT* must be modified to a value of 3° F (1.67° C) less than the lead chiller's *CONTROL POINT* value. If the *LOAD BALANCE OPTION* is disabled, the *ACTIVE DEMAND LIMIT* and the *CONTROL POINT* are forced to the same value as the lead chiller.

AUTO. RESTART AFTER POWER FAILURE — When an auto. restart condition occurs, each chiller may have a delay added to the start-up sequence, depending on its lead/lag configuration. The lead chiller does not have a delay. The lag chiller has a 45-second delay. The standby chiller has a 90-second delay. The delay time is added after the chiller water flow is verified. The PIC II ensures the guide vanes are closed. After the guide vane position is confirmed, the delay for lag and standby chillers occurs prior to energizing the oil pump. The normal start-up sequence then continues. The auto. restart delay sequence occurs whether the chiller is in CCN or LOCAL mode and is intended to stagger the compressor motor starts. Preventing the motors from starting simultaneously helps reduce the inrush demands on the building power system.

Ice Build Control — The ice build control option automatically sets the *CONTROL POINT* of the chiller to a temperature that allows ice building for thermal storage.

NOTE: For ice build control to operate properly, the PIC II must be in CCN mode.

NOTE: See Fig. 15 and 16 for more information on ice build-related menus.

The PIC II can be configured for ice build operation.

- From the SERVICE menu, access the EQUIPMENT SERVICE table. From there, select the OPTIONS screen to enable or disable the *ICE BUILD OPTION*. See Table 2, Example 16.
- The *ICE BUILD SETPOINT* can be configured from the SETPOINT display, which is accessed from the PIC II main menu. See Table 2, Example 8.
- The ice build schedule can be viewed or modified from the SCHEDULE table. From this table, select the ice build schedule (OCCPC02S) screen. See Fig. 17 and the section on Time Schedule Operation, page 19, for more information on modifying chiller schedules.

The ice build time schedule defines the period(s) during which ice build is active if the ice build option is enabled. If the ice build time schedule overlaps other schedules, the ice build time schedule takes priority. During the ice build period, the *CONTROL POINT* is set to the *ICE BUILD SETPOINT* for temperature control. The *ICE BUILD RECYCLE* and *ICE BUILD TERMINATION* parameters, accessed from the OPTIONS screen, allow the chiller operator to recycle or terminate the ice build cycle. The ice build cycle can be configured to terminate if:

- the *ENTERING CHILLED WATER* temperature is less than the *ICE BUILD SETPOINT*. In this case, the operator sets the *ICE BUILD TERMINATION* parameter to 0 on the OPTIONS screen.
- the REMOTE CONTACT inputs from an ice level indicator are opened. In this case, the operator sets the *ICE BUILD TERMINATION* parameter to 1 on the OPTIONS screen.
- the chilled water temperature is less than the ice build set point *and* the remote contact inputs from an ice level indicator are open. In this case, the operator sets the *ICE BUILD TERMINATION* parameter to 2 on the OPTIONS screen.
- the end of the ice build time schedule has been reached.

ICE BUILD INITIATION — The ice build time schedule (OCCPC02S) is the means for activating the ice build option. The ice build option is enabled if:

- a day of the week and a time period on the ice build time schedule are enabled. The SCHEDULE screen shows an X in the day field and ON/OFF times are designated for the day(s),
- *and* the *ICE BUILD OPTION* is enabled.

The following events take place (unless overridden by a higher authority CCN device).

1. *CHILLER START/STOP* is forced to START.
2. The *CONTROL POINT* is forced to the *ICE BUILD SETPOINT*.
3. Any force (Auto) is removed from the *ACTIVE DEMAND LIMIT*.

NOTE: A parameter's value can be forced, that is, the value can be manually changed at the CVC by an operator, changed from another CCN device, or changed by other algorithms in the PIC II control system.

NOTE: Items 1-3 (shown above) do not occur if the chiller is configured and operating as a lag or standby chiller for lead/lag operation and is actively being controlled by a lead chiller. The lead chiller communicates the *ICE BUILD SET POINT*, the desired *CHILLER START/STOP* state, and the *ACTIVE DEMAND LIMIT* to the lag or standby chiller as required for ice build, if configured to do so.

START-UP/RECYCLE OPERATION — If the chiller is not running when ice build activates, the PIC II checks the following conditions, based on the *ICE BUILD TERMINATION* value, to avoid starting the compressor unnecessarily:

- if *ICE BUILD TERMINATION* is set to the TEMP option and the *ENTERING CHILLED WATER* temperature is less than or equal to the *ICE BUILD SETPOINT*;
- if *ICE BUILD TERMINATION* is set to the *CONTACTS* option and the remote contacts are open;
- if the *ICE BUILD TERMINATION* is set to the BOTH (temperature and contacts) option and the *ENTERING CHILLED WATER* temperature is less than or equal to the *ICE BUILD SETPOINT and* the remote contacts are open.

The *ICE BUILD RECYCLE* on the OPTIONS screen determines whether or not the chiller will go into an ice build RECYCLE mode.

- If the *ICE BUILD RECYCLE* is set to DSABLE (disable), the PIC II reverts to normal temperature control when the ice build function terminates.
- If the *ICE BUILD RECYCLE* is set to ENABLE, the PIC II goes into an *ICE BUILD RECYCLE* mode and the chilled water pump relay remains energized to keep the chilled water flowing when the ice build function terminates. If the temperature of the *ENTERING CHILLED WATER* increases above the *ICE BUILD SETPOINT* plus the *RECYCLE RESTART DELTA T* value, the compressor restarts and controls the chilled water/brine temperature to the *ICE BUILD SETPOINT*.

TEMPERATURE CONTROL DURING ICE BUILD — During ice build, the capacity control algorithm shall use the *CONTROL POINT* minus 5 F (−2.8 C) for control of the *LEAVING CHILLED WATER* temperature. See Table 2, example 9, the *CAPACITY CONTROL* parameter on the CAPACITY screen.) The *ECW CONTROL OPTION* and any

temperature reset option shall be ignored, if enabled, during ice build. The AUTO DEMAND LIMIT INPUT shall also be ignored if enabled during ice build.

- *ECW CONTROL OPTION* and any temperature reset options (configured on TEMP_CTL screen).
- *20 mA DEMAND LIMIT OPT* (configured on RAMP_DEM screen).

TERMINATION OF ICE BUILD — The ice build function terminates under the following conditions:

1. Time Schedule — When the current time on the ice build time schedule (OCCPC02S) is *not* set as an ice build time period.
2. Entering Chilled Water Temperature — Compressor operation terminates, based on temperature, if the *ICE BUILD TERMINATION* parameter is set to 0 (TEMP), the *ENTERING CHILLED WATER* temperature is less than the *ICE BUILD SETPOINT*, and the ICE BUILD RECYCLE is set to DSABLE. If the *ICE BUILD RECYCLE OPTION* is set to ENABLE, a recycle shutdown occurs and recycle start-up depends on the *LEAVING CHILLED WATER* temperature being greater than the *WATER/BRINE CONTROL POINT* plus the *RECYCLE RESTART DELTA T* temperature.
3. Remote Contacts/Ice Level Input — Compressor operation terminates when the *ICE BUILD TERMINATION* parameter is set to 1 CONTACTS) and the remote contacts are open and the ICE BUILD RECYCLE is set to DSABLE (0). In this case, the contacts provide ice level termination control. The contacts are used to stop the ice build function when a time period on the ice build schedule (OCCPC02S) *is* set for ice build operation. The remote contacts can still be opened and closed to start and stop the chiller when a specific time period on the ice build schedule is *not* set for ice build.
4. Entering Chilled Water Temperature and ICE BUILD Contacts — Compressor operation terminates when the *ICE BUILD TERMINATION* parameter is set to 2 (*BOTH*) and the conditions described above in items 2 and 3 for entering chilled water temperature and remote contacts have occurred.

NOTE: It is not possible to override the *CHILLER START/STOP*, *CONTROL POINT*, and *ACTIVE DEMAND LIMIT* variables from CCN devices (with a priority 4 or greater) during the ice build period. However, a CCN device can override these settings during 2-chiller lead/lag operation.

RETURN TO NON-ICE BUILD OPERATIONS — The ice build function forces the chiller to start, even if all other schedules indicate that the chiller should stop. When the ice build function terminates, the chiller returns to normal temperature control and start/stop schedule operation. The *CHILLER START/STOP* and *CONTROL POINT* return to normal operation. If the *CHILLER START/STOP* or *CONTROL POINT* has been forced (with a device of less than 4 priority) before the ice build function started, when the ice build function ends, the previous forces (of less than 4 priority) are not automatically restored.

Attach to Network Device Control — The Service menu includes the ATTACH TO NETWORK DEVICE screen. From this screen, the operator can:

- enter the time schedule number (if changed) for OCCPC03S, as defined in the NET_OPT screen
- attach the CVC to any CCN device, if the chiller has been connected to a CCN network. This may include other PIC-controlled chillers.
- upgrade software

Figure 21 shows the ATTACH TO NETWORK DEVICE screen. The *LOCAL* parameter is always the CVC module address of the chiller on which it is mounted. Whenever the controller identification of the CVC changes, the change is reflected automatically in the BUS and ADDRESS columns for the local device. See Fig. 16. Default address for local device is BUS 0 ELEMENT 1.

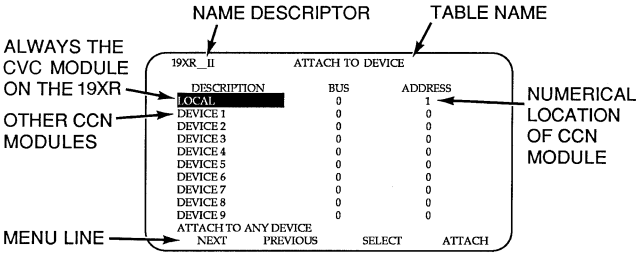

Fig. 21 — Example of Attach to Network Device Screen

When the ATTACH TO NETWORK DEVICE screen is accessed, information can not be read from the CVC on any device until one of the devices listed on that screen is attached. The CVC erases information about the module to which it was attached to make room for information on another device. Therefore, a CCN module must be attached when this screen is entered.

To attach any CCN device, highlight it using the SELECT softkey and press the ATTACH softkey. The message "UPLOADING TABLES, PLEASE WAIT" displays. The CVC then uploads the highlighted device or module. If the module address cannot be found, the message "COMMUNICATION FAILURE" appears. The CVC then reverts back to the ATTACH TO DEVICE screen. Try another device or check the address of the device that would not attach. The upload process time for each CCN module is different. In general, the uploading process takes 1 to 2 minutes. Before leaving the ATTACH TO NETWORK DEVICE screen, select the local device. Otherwise, the CVC will be unable to display information on the local chiller.

ATTACHING TO OTHER CCN MODULES — If the chiller CVC has been connected to a CCN Network or other PIC controlled chillers through CCN wiring, the CVC can be used to view or change parameters on the other controllers. Other PIC II chillers can be viewed and set points changed (if the other unit is in CCN control), if desired, from this particular CVC module.

If the module number is not valid, the "COMMUNICATION FAILURE" message will show and a new address number must be entered or the wiring checked. If the module is communicating properly, the "UPLOAD IN PROGRESS" message will flash and the new module can now be viewed.

Whenever there is a question regarding which module on the CVC is currently being shown, check the device name descriptor on the upper left hand corner of the CVC screen. See Fig. 21.

When the CCN device has been viewed, the ATTACH TO NETWORK DEVICE table should be used to attach to the PIC that is on the chiller. Move to the ATTACH TO NETWORK DEVICE table (LOCAL should be highlighted) and press the ATTACH softkey to upload the LOCAL device. The CVC for the 19XR will be uploaded and default screen will display.

NOTE: The CVC will not automatically reattach to the local module on the chiller. Press the ATTACH softkey to attach to the LOCAL device and view the chiller operation.

Service Operation — An overview of the tables and screens available for the SERVICE function is shown in Fig. 16.

TO ACCESS THE SERVICE SCREENS — When the SERVICE screens are accessed, a password must be entered.

1. From the main MENU screen, press the SERVICE softkey. The softkeys now correspond to the numerals 1, 2, 3, 4.
2. Press the four digits of the password, one at a time. An asterisk (*) appears as each digit is entered.

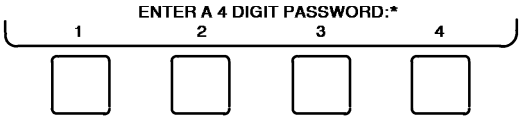

NOTE: The initial factory-set password is 1 - 1- 1 - 1. If the password is incorrect, an error message is displayed.

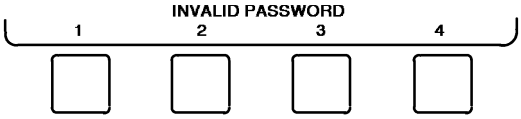

If this occurs, return to Step 1 and try to access the SERVICE screens again. If the password is correct, the softkey labels change to:

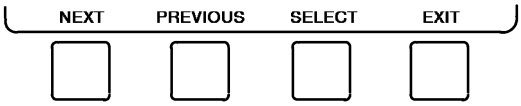

NOTE: The SERVICE screen password can be changed by entering the CVC CONFIGURATION screen under SERVICE menu. The password is located at the bottom of the menu.

The CVC screen displays the following list of available SERVICE screens:

- Alarm History
- Control Test
- Control Algorithm Status
- Equipment Configuration
- ISM (STARTER) Config Data
- Equipment Service
- Time and Date
- Attach to Network Device
- Log Out of Device
- CVC Configuration

See Fig. 16 for additional screens and tables available from the SERVICE screens listed above. Use the EXIT softkey to return to the main MENU screen.

NOTE: To prevent unauthorized persons from accessing the CVC service screens, the CVC automatically signs off and password-protects itself if a key has not been pressed for 15 minutes. The sequence is as follows. Fifteen minutes after the last key is pressed, the default screen displays, the CVC screen light goes out (analogous to a screen saver), and the CVC logs out of the password-protected SERVICE menu. Other screen and menus, such as the STATUS screen can be accessed without the password by pressing the appropriate softkey.

TO LOG OUT OF NETWORK DEVICE — To access this screen and log out of a network device, from the default CVC screen, press the MENU and SERVICE softkeys. Enter the password and, from the SERVICE menu, highlight LOG OUT OF NETWORK DEVICE and press the SELECT softkey. The CVC default screen will now be displayed.

HOLIDAY SCHEDULING (Fig. 22) — The time schedules may be configured for special operation during a holiday period. When modifying a time period, the ‘‘H’’ at the end of the days of the week field signifies that the period is applicable to a holiday. (See Fig. 17.)

The broadcast function must be activated for the holidays configured on the HOLIDEF screen to work properly. Access the BRODEF screen from the EQUIPMENT CONFIGURATION table and select ENABLE to the activated function. Note that when the chiller is connected to a CCN Network, only one chiller or CCN device can be configured as the broadcast device. The controller that is configured as the broadcaster is the device responsible for transmitting holiday, time, and daylight-savings dates throughout the network.

To access the BRODEF screen, see the SERVICE menu structure, Fig. 16.

To view or change the holiday periods for up to 18 different holidays, perform the following operation:

1. At the Menu screen, press SERVICE to access the Service menu.
2. If not logged on, follow the instructions for To Log On or To Log Off. Once logged on, press NEXT until Equipment Configuration is highlighted.
3. Once Equipment Configuration is highlighted, press SELECT to access.
4. Press NEXT until HOLIDAYS is highlighted. This is the Holiday Definition table.
5. Press SELECT to enter the Data Table Select screen. This screen lists 18 holiday tables.
6. Press NEXT to highlight the holiday table that is to be viewed or changed. Each table is one holiday period, starting on a specific date, and lasting up to 99 days.
7. Press SELECT to access the holiday table. The Configuration Select table now shows the holiday start month and day, and how many days the holiday period will last.
8. Press NEXT or PREVIOUS to highlight the month, day, or duration.
9. Press SELECT to modify the month, day, or duration.
10. Press INCREASE or DECREASE to change the selected value.
11. Press ENTER to save the changes.
12. Press EXIT to return to the previous menu.

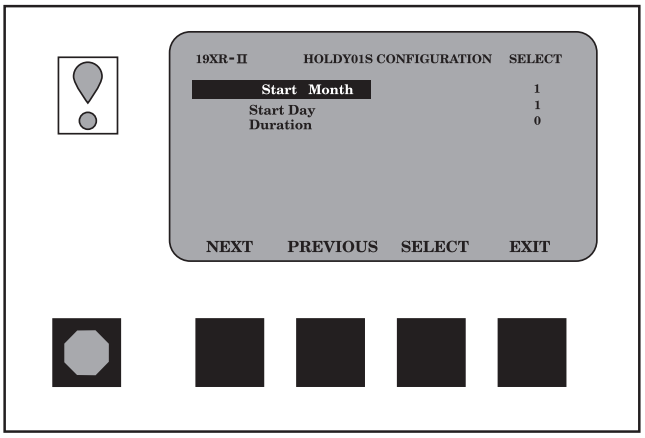

Fig. 22 — Example of Holiday Period Screen

START-UP/SHUTDOWN/RECYCLE SEQUENCE (Fig. 23)

Local Start-Up — Local start-up (or a manual start-up) is initiated by pressing the LOCAL menu softkey on the default CVC screen. Local start-up can proceed when the chiller schedule indicates that the current time and date have been established as a run time and date, and after the internal 15-minute start-to-start and the 1-minute stop-to-start inhibit timers have expired. These timers are represented in the *START INHIBIT TIMER* and can be viewed on the MAINSTAT screen and DEFAULT screen. The timer must expire before the chiller will start. If the timers have not expired the *RUN STATUS* parameter on the MAINSTAT screen now reads *TIMEOUT*.

NOTE: The time schedule is said to be ''occupied'' if the *OCCUPIED ?* parameter on the MAINSTAT screen is set to YES. For more information on occupancy schedules, see the sections on Time Schedule Operation (page 19), Occupancy Schedule (page 32), and To Prevent Accidental Start-Up (page 59), and Fig. 17.

If the *OCCUPIED ?* parameter on the MAINSTAT screen is set to NO, the chiller can be forced to start as follows. From the default CVC screen, press the MENU and STATUS softkeys. Scroll to highlight MAINSTAT. Press the SELECT softkey. Scroll to highlight *CHILLER START/STOP*. Press the START softkey to override the schedule and start the chiller.

NOTE: The chiller will continue to run until this forced start is released, regardless of the programmed schedule. To release the forced start, highlight *CHILLER START/STOP* from the MAINSTAT screen and press the RELEASE softkey. This action returns the chiller to the start and stop times established by the schedule.

The chiller may also be started by overriding the time schedule. From the default screen, press the MENU and SCHEDULE softkeys. Scroll down and select the current schedule. Select OVERRIDE, and set the desired override time.

Another condition for start-up must be met for chillers that have the *REMOTE CONTACTS OPTION* on the EQUIPMENT SERVICE screen set to ENABLE. For these chillers, the *REMOTE CONTACTS INPUT* parameter on the MAINSTAT screen must be CLOSED. From the CVC default screen, press the MENU and STATUS softkeys. Scroll to highlight MAINSTAT and press the SELECT softkey. Scroll down the STATUS01 screen to highlight *REMOTE CONTACTS INPUT* and press the SELECT softkey. Then, press the CLOSE softkey. To end the override, select *REMOTE CONTACTS INPUT* and press the RELEASE softkey.

Once local start-up begins, the PIC II performs a series of pre-start tests to verify that all pre-start alerts and safeties are within the limits shown in Table 3. The *RUN STATUS* parameter on the MAINSTAT screen line now reads PRESTART. If a test is not successful, the start-up is delayed or aborted. If the tests are successful, the chilled water/brine pump relay energizes, and the MAINSTAT screen line now reads STARTUP.

Five seconds later, the condenser pump relay energizes. Thirty seconds later the PIC II monitors the chilled water and condenser water flow devices and waits until the *WATER FLOW VERIFY TIME* (operator-configured, default 5 minutes) expires to confirm flow. After flow is verified, the chilled water temperature is compared to *CONTROL POINT* plus 1/2 *CHILLED WATER DEADBAND*. If the temperature is less than or equal to this value, the PIC II turns off the condenser pump relay and goes into a RECYCLE mode.

If the water/brine temperature is high enough, the start-up sequence continues and checks the guide vane position. If the guide vanes are more than 4% open, the start-up waits until the PIC II closes the vanes. If the vanes are closed and the oil pump pressure is less than 4 psi (28 kPa), the oil pump relay energizes. The PIC II then waits until the oil pressure *(OIL PRESS VERIFY TIME,* operator-configured, default of 40 seconds) reaches a maximum of 18 psi (124 kPa). After oil pressure is verified, the PIC II waits 40 seconds, and the compressor start relay (1CR) energizes to start the compressor.

Compressor ontime and service ontime timers start, and the compressor starts in 12 hours counter and the number of starts over a 12-hour period counter advance by one.

Failure to verify any of the requirements up to this point will result in the PIC II aborting the start and displaying the applicable pre-start mode of failure on the CVC default screen. A pre-start failure does not advance the starts in 12 hours counter. Any failure after the 1CR relay has energized results in a safety shutdown, advances the starts in the 12 hours counter by one, and displays the applicable shutdown status on the CVC display.

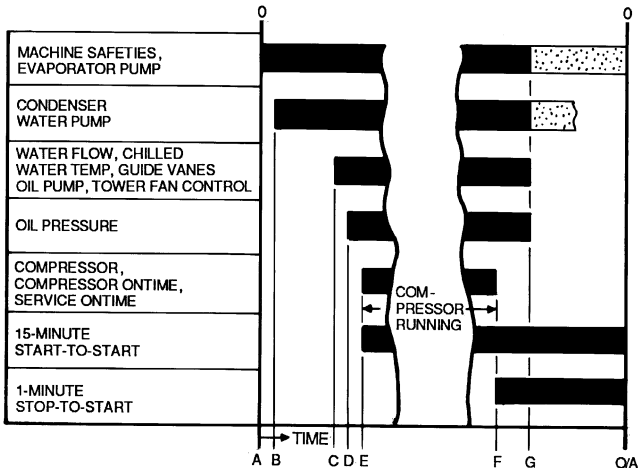

A — START INITIATED — Prestart checks made; evaporator pump started.
B — Condenser water pump started (5 seconds after A).
C — Water flows verified (30 seconds to 5 minutes maximum after B). Chilled water temperatures checked against control point. Guide vanes checked for closure. Oil pump started; tower fan control enabled.
D — Oil pressure verified (15 seconds minimum, 300 seconds maximum after C).
E — Compressor motor starts, compressor ontime and service ontime start, 15-minute inhibit timer starts (10 seconds after D), total compressor starts advances by one, and the number of starts over a 12-hour period advances by one.
F — SHUTDOWN INITIATED — Compressor motor stops, compressor ontime and service ontime stops, and 1-minute inhibit timer starts.
G — Oil pump and evaporator pumps deenergized (60 seconds after F). Condenser pump and tower fan control may continue to operate if condenser pressure is high. Evaporator pump may continue if in RECYCLE mode.
O/A — Restart permitted (both inhibit timers expired: minimum of 15 minutes after E; minimum of 1 minute after F).

Fig. 23 — Control Sequence

Shutdown Sequence — Chiller shutdown begins if any of the following occurs:

- the STOP button is pressed for at least one second (the alarm light blinks once to confirm the stop command)
- a recycle condition is present (see Chilled Water Recycle Mode section)
- the time schedule has gone into unoccupied mode
- the chiller protective limit has been reached and chiller is in alarm
- the start/stop status is overridden to stop from the CCN network or the CVC

When a stop signal occurs, the shutdown sequence first stops the compressor by deactivating the start relay (1CR). A status message of ''SHUTDOWN IN PROGRESS, COMPRESSOR DEENERGIZED'' is displayed, and the compressor ontime and service ontime stop. The guide vanes are then brought to the closed position. The oil pump relay and the chilled water/brine pump relay shut down 60 seconds after the compressor stops. The condenser water pump shuts down at the same time if the *ENTERING CONDENSER WATER* temperature is greater than or equal to 115 F (46.1 C) and the *CONDENSER REFRIG TEMP* is greater than the *CONDENSER FREEZE POINT* plus 5 F (−15.0 C). The stop-to-start timer now begins to count down. If the start-to-start timer value is still greater than the value of the start-to-stop timer, then this time displays on the CVC.

Certain conditions that occur during shutdown can change this sequence.

- If the *AVERAGE LINE CURRENT* is greater than 15% after shutdown, or the starter contacts remain energized, the oil pump and chilled water pump remain energized and the alarm is displayed.
- The condenser pump shuts down when the CONDENSER PRESSURE is less than the CONDENSER PRESSURE OVERRIDE threshold minus 3.5 psi (24.1 kPa) and the CONDENSER REFRIG TEMP is less than or equal to the ENTERING CONDENSER WATER temperature plus 3° F (−1.6° C).
- If the chiller shuts down due to low refrigerant temperature, the chilled water pump continues to run until the *LEAVING CHILLED WATER* temperature is greater than the *CONTROL POINT* temperature, plus 5° F (3° C).

Automatic Soft Stop Amps Threshold — The soft stop amps threshold feature closes the guide vanes of the compressor automatically if a non-recycle, non-alarm stop signal occurs before the compressor motor is deenergized.

If the STOP button is pressed, the guide vanes close to a preset amperage percent until the guide vane is less than 4% open or 4 minutes have passed. The compressor then shuts off.

If the chiller enters an alarm state or if the compressor enters a RECYCLE mode, the compressor deenergizes immediately.

To activate the soft stop amps threshold feature, scroll to the bottom of OPTIONS screen on the CVC. Use the INCREASE or DECREASE softkey to set the *SOFT STOP AMPS THRESHOLD* parameter to the percent of amps at which the motor will shut down. The default setting is 100% amps (no soft stop). The range is 40 to 100%.

When the soft stop amps threshold feature is being applied, a status message, ''SHUTDOWN IN PROGRESS, COMPRESSOR UNLOADING'' displays on the CVC.

The soft stop amps threshold function can be terminated and the compressor motor deenergized immediately by depressing the STOP button twice.

Chilled Water Recycle Mode — The chiller may cycle off and wait until the load increases to restart when the compressor is running in a lightly loaded condition. This cycling is normal and is known as ″recycle.″ A recycle shutdown is initiated when any of the following conditions are true:

- the chiller is in LCW control, the difference between the *LEAVING CHILLED WATER* temperature and *ENTERING CHILLED WATER* temperature is less than the *RECYCLE SHUTDOWN DELTA T* (found in the SETUP1 table) *and* the *LEAVING CHILLED WATER* temperature is below the *CONTROL POINT, −5 F (−15.0 C)* the *CONTROL POINT* has not increased in the last 5 minutes and ICE BUILD is not active.
- the *ECW CONTROL OPTION* is enabled, the difference between the *ENTERING CHILLED WATER* temperature and the *LEAVING CHILLED WATER* temperature is less than the *RECYCLE SHUTDOWN DELTA T* (found in the SETUP1 table), *and* the *ENTERING CHILLED WATER* temperature is below the *CONTROL POINT* −5 F (−15.0 C) *and* the *CONTROL POINT* has not increased in the last 5 minutes.
- the *LEAVING CHILLED WATER* temperature is within 3° F (2° C) of the *EVAP REFRIG TRIPPOINT.*

When the chiller is in RECYCLE mode, the chilled water pump relay remains energized so the chilled water temperature can be monitored for increasing load. The recycle control uses *RECYCLE RESTART DELTA T* to check when the compressor should be restarted. This is an operator-configured function which defaults to 5° F (3° C). This value can be viewed or modified on the SETUP1 table. The compressor will restart when the chiller is:

- in LCW CONTROL and the *LEAVING CHILLED WATER* temperature is greater than the *CONTROL POINT* plus the *RECYCLE RESTART DELTA T.*
- *in ECW CONTROL and the ENTERING CHILLED WATER* temperature is greater than the *CONTROL POINT* plus the *RECYCLE RESTART DELTA T.*

Once these conditions are met, the compressor initiates a start-up with a normal start-up sequence.

An alert condition may be generated if 5 or more recycle start-ups occur in less than 4 hours. Excessive recycling can reduce chiller life; therefore, compressor recycling due to extremely low loads should be reduced.

To reduce compressor recycling, use the time schedule to shut the chiller down during known low load operation period, or increase the chiller load by running the fan systems. If the hot gas bypass is installed, adjust the values to ensure that hot gas is energized during light load conditions. Increase the *RECYCLE RESTART DELTA T* on the SETUP1 table to lengthen the time between restarts.

The chiller should not be operated below design minimum load without a hot gas bypass installed.

Safety Shutdown — A safety shutdown is identical to a manual shutdown with the exception that, during a safety shutdown, the CVC displays the reason for the shutdown, the alarm light blinks continuously, and the spare alarm contacts are energized.

After a safety shutdown, the RESET softkey must be pressed to clear the alarm. If the alarm condition is still present, the alarm light continues to blink. Once the alarm is cleared, the operator must press the CCN or LOCAL softkeys to restart the chiller.

BEFORE INITIAL START-UP

Job Data Required

- list of applicable design temperatures and pressures (product data submittal)
- chiller certified prints
- starting equipment details and wiring diagrams
- diagrams and instructions for special controls or options
- 19XR Installation Instructions
- pumpout unit instructions

Equipment Required

- mechanic's tools (refrigeration)
- digital volt-ohmmeter (DVM)
- clamp-on ammeter
- electronic leak detector
- absolute pressure manometer or wet-bulb vacuum indicator (Fig. 24)
- 500-v insulation tester (megohmmeter) for compressor motors with nameplate voltage of 600 v or less, or a 5000-v insulation tester for compressor motor rated above 600 v

Using the Optional Storage Tank and Pumpout System — Refer to Chillers with Storage Tanks section, page 63 for pumpout system preparation, refrigerant transfer, and chiller evacuation.

Remove Shipping Packaging — Remove any packaging material from the control center, power panel, guide vane actuator, motor cooling and oil reclaim solenoids, motor and bearing temperature sensor covers, and the factory-mounted starter.

Open Oil Circuit Valves — Check to ensure the oil filter isolation valves (Fig. 4) are open by removing the valve cap and checking the valve stem.

Tighten All Gasketed Joints and Guide Vane Shaft Packing — Gaskets and packing normally relax by the time the chiller arrives at the jobsite. Tighten all gasketed joints and the guide vane shaft packing to ensure a leak-tight chiller.

Check Chiller Tightness — Figure 25 outlines the proper sequence and procedures for leak testing.

19XR chillers are shipped with the refrigerant contained in the condenser shell and the oil charge in the compressor. The cooler is shipped with a 15 psig (103 kPa) refrigerant charge. Units may be ordered with the refrigerant shipped separately, along with a 15 psig (103 kPa) nitrogen-holding charge in each vessel.

To determine if there are any leaks, the chiller should be charged with refrigerant. Use an electronic leak detector to check all flanges and solder joints after the chiller is pressurized. If any leaks are detected, follow the leak test procedure.

If the chiller is spring isolated, keep all springs blocked in both directions to prevent possible piping stress and damage during the transfer of refrigerant from vessel to vessel during the leak test process, or any time refrigerant is being transferred. Adjust the springs when the refrigerant is in operating condition and the water circuits are full.

Refrigerant Tracer — Carrier recommends the use of an environmentally acceptable refrigerant tracer for leak testing with an electronic detector or halide torch.

Ultrasonic leak detectors can also be used if the chiller is under pressure.

⚠ WARNING

Do not use air or oxygen as a means of pressurizing the chiller. Mixtures of HFC-134a and air can undergo combustion.

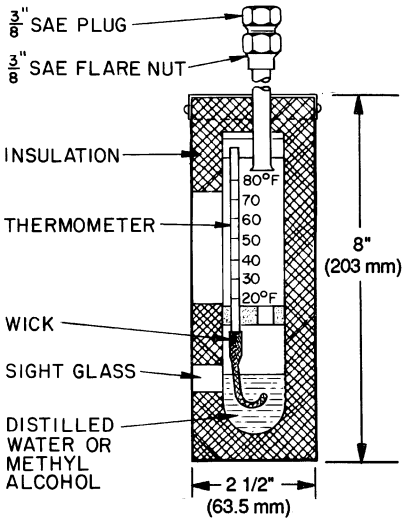

Fig. 24 — Typical Wet-Bulb Type Vacuum Indicator

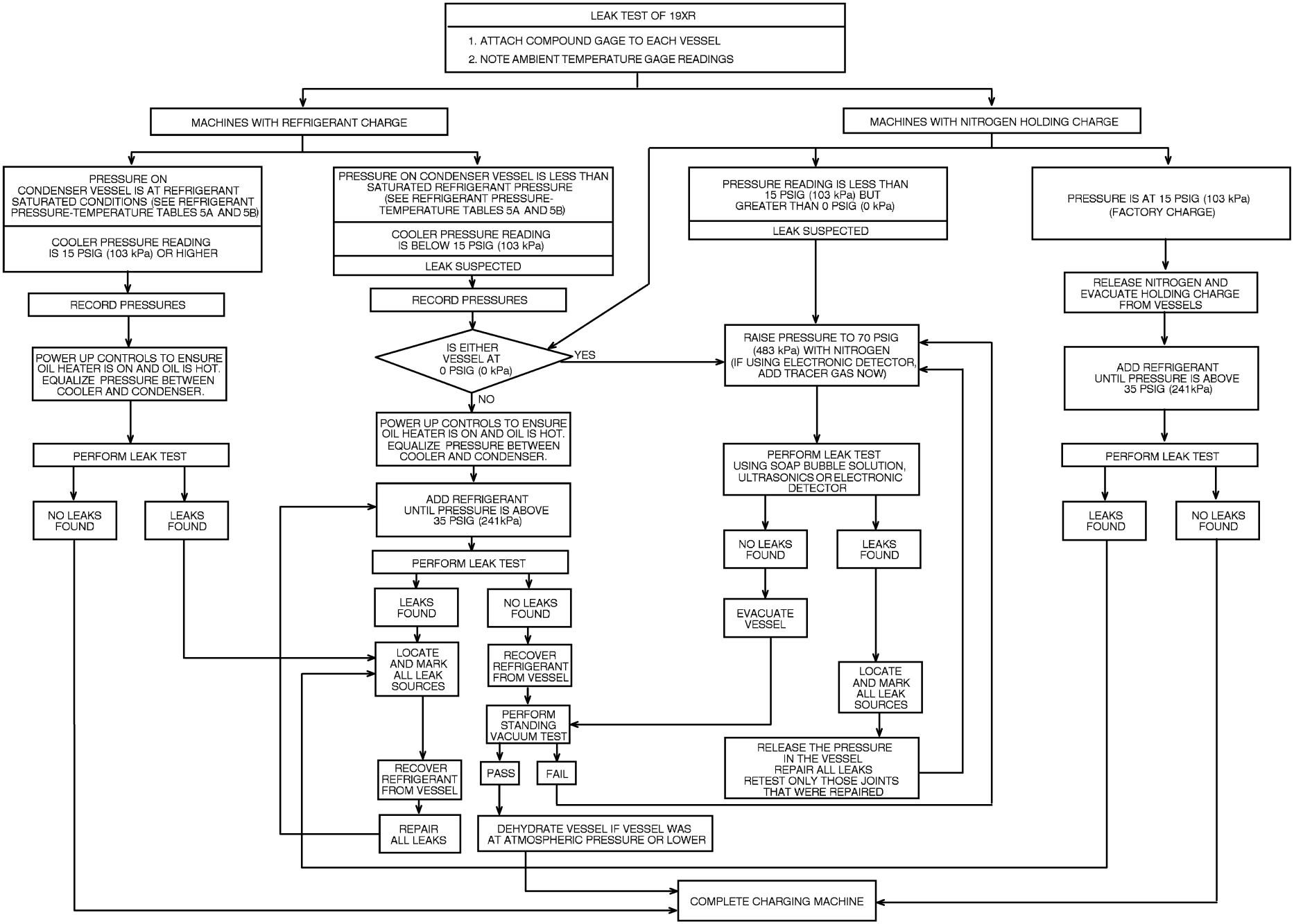

Fig. 25 — 19XR Leak Test Procedures

Leak Test Chiller — Due to regulations regarding refrigerant emissions and the difficulties associated with separating contaminants from the refrigerant, Carrier recommends the following leak test procedure. See Fig. 25 for an outline of the leak test procedure. Refer to Fig. 26 and 27 during pumpout procedures and Tables 5A and 5B for refrigerant pressure/temperature values.

1. If the pressure readings are normal for the chiller condition:
   a. Evacuate the holding charge from the vessels, if present.
   b. Raise the chiller pressure, if necessary, by adding refrigerant until pressure is at the equivalent saturated pressure for the surrounding temperature. Follow the pumpout procedures in the Transfer Refrigerant from Pumpout Storage Tank to Chiller section, Steps 1a - e, page 63.

⚠ WARNING

Never charge liquid refrigerant into the chiller if the pressure in the chiller is less than 35 psig (241 kPa) for HFC-134a. Charge as a gas only, with the cooler and condenser pumps running, until this pressure is reached, using PUMPDOWN LOCKOUT and TERMINATE LOCKOUT mode on the PIC II. Flashing of liquid refrigerant at low pressures can cause tube freeze-up and considerable damage.

   c. Leak test chiller as outlined in Steps 3 - 9.
2. If the pressure readings are abnormal for the chiller condition:
   a. Prepare to leak test chillers shipped with refrigerant (Step 2h).
   b. Check for large leaks by connecting a nitrogen bottle and raising the pressure to 30 psig (207 kPa). Soap test all joints. If the test pressure holds for 30 minutes, prepare the test for small leaks (Steps 2g - h).
   c. Plainly mark any leaks that are found.
   d. Release the pressure in the system.
   e. Repair all leaks.
   f. Retest the joints that were repaired.
   g. After successfully completing the test for large leaks, remove as much nitrogen, air, and moisture as possible, given the fact that small leaks may be present in the system. This can be accomplished by following the dehydration procedure, outlined in the Chiller Dehydration section, page 51.
   h. Slowly raise the system pressure to a maximum of 160 psig (1103 kPa) but no less than 35 psig (241 kPa) for HFC-134a by adding refrigerant. Proceed with the test for small leaks (Steps 3-9).
3. Check the chiller carefully with an electronic leak detector, halide torch, or soap bubble solution.
4. Leak Determination — If an electronic leak detector indicates a leak, use a soap bubble solution, if possible, to confirm. Total all leak rates for the entire chiller. Leakage at rates greater than 1 lb/year (0.45 kg/year) for the entire chiller must be repaired. Note the total chiller leak rate on the start-up report.
5. If no leak is found during the initial start-up procedures, complete the transfer of refrigerant gas from the pumpout storage tank to the chiller (see Transfer Refrigerant from Pumpout Storage Tank to Chiller section, page 63). Retest for leaks.
6. If no leak is found after a retest:
   a. Transfer the refrigerant to the pumpout storage tank and perform a standing vacuum test as outlined in the Standing Vacuum Test section, below.
   b. If the chiller fails the standing vacuum test, check for large leaks (Step 2b).
   c. If the chiller passes the standing vacuum test, dehydrate the chiller. Follow the procedure in the Chiller Dehydration section. Charge the chiller with refrigerant (see Transfer Refrigerant from Pumpout Storage Tank to Chiller section, page 63).
7. If a leak is found after a retest, pump the refrigerant back into the pumpout storage tank or, if isolation valves are present, pump the refrigerant into the non-leaking vessel (see Pumpout and Refrigerant Transfer procedures section).
8. Transfer the refrigerant until the chiller pressure is at 18 in. Hg (40 kPa absolute).
9. Repair the leak and repeat the procedure, beginning from Step 2h, to ensure a leak-tight repair. (If the chiller is opened to the atmosphere for an extended period, evacuate it before repeating the leak test.)

Standing Vacuum Test — When performing the standing vacuum test or chiller dehydration, use a manometer or a wet bulb indicator. Dial gages cannot indicate the small amount of acceptable leakage during a short period of time.

1. Attach an absolute pressure manometer or wet bulb indicator to the chiller.
2. Evacuate the vessel (see Pumpout and Refrigerant Transfer Procedures section, page 62) to at least 18 in. Hg vac, ref 30-in. bar (41 kPa), using a vacuum pump or the pumpout unit.
3. Valve off the pump to hold the vacuum and record the manometer or indicator reading.
4. a. <u>If the leakage rate is less than 0.05 in. Hg (0.17 kPa)</u> in 24 hours, the chiller is sufficiently tight.
   b. <u>If the leakage rate exceeds 0.05 in. Hg (0.17 kPa)</u> in 24 hours, repressurize the vessel and test for leaks. If refrigerant is available in the other vessel, pressurize by following Steps 2-10 of Return Chiller To Normal Operating Conditions section, page 64. If not, use nitrogen and a refrigerant tracer. Raise the vessel pressure in increments until the leak is detected. If refrigerant is used, the maximum gas pressure is approximately 70 psig (483 kPa) for HFC-134a at normal ambient temperature. If nitrogen is used, limit the leak test pressure to 230 psig (1585 kPa) maximum.
5. Repair the leak, retest, and proceed with dehydration.

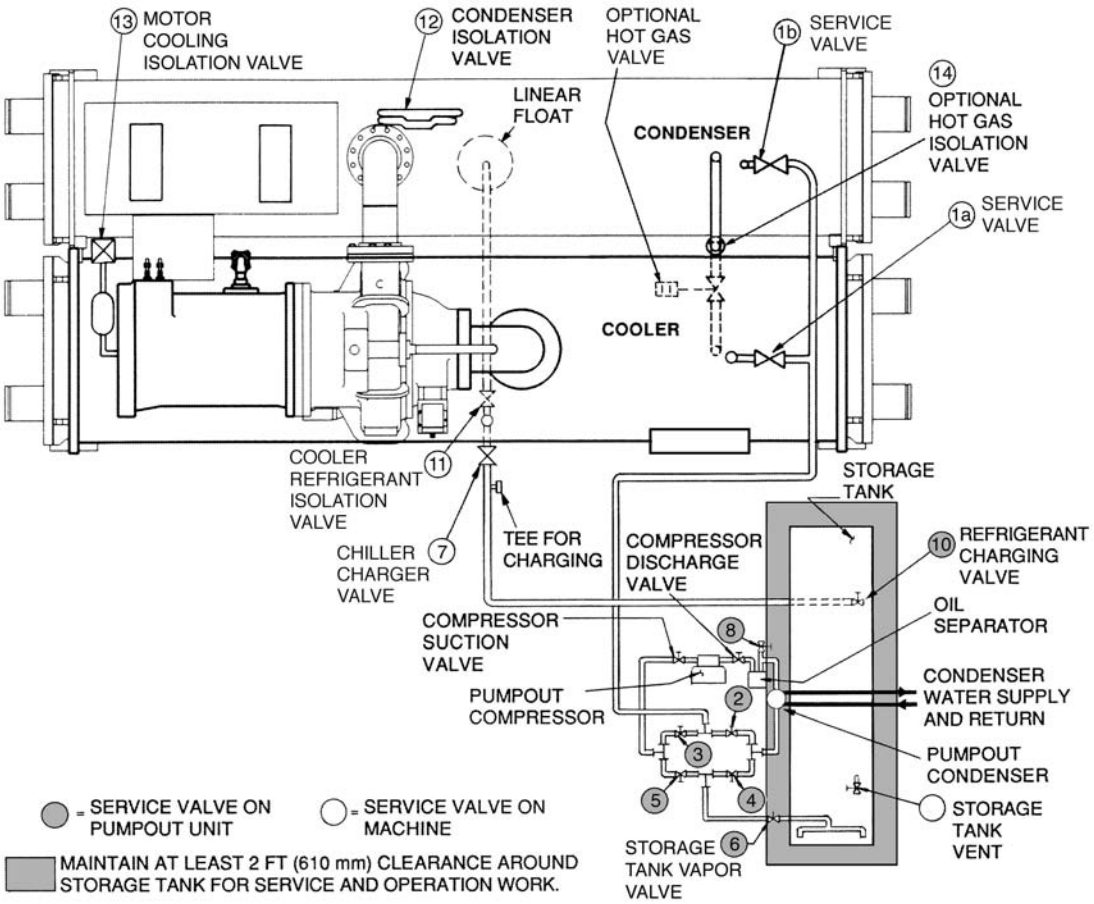

Fig. 26 — Typical Optional Pumpout System Piping Schematic with Storage Tank

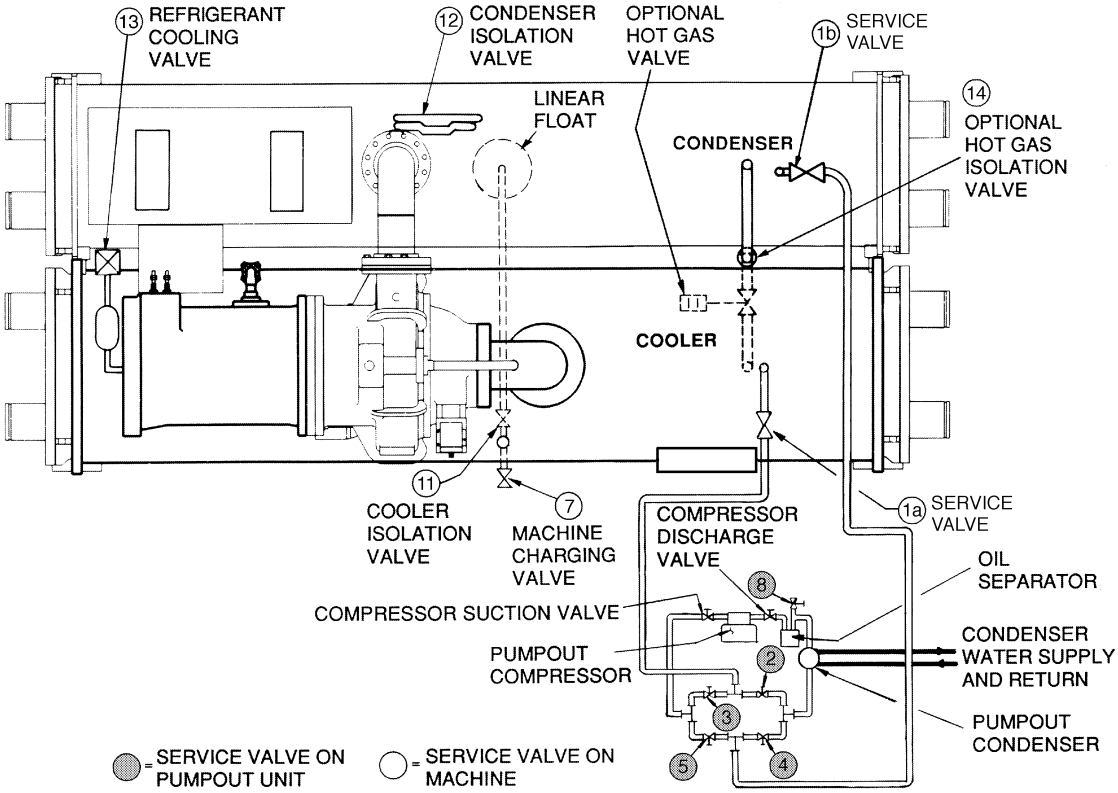

Fig. 27 — Typical Optional Pumpout System Piping Schematic without Storage Tank

Table 5A — HFC-134a Pressure — Temperature (F)

TEMPERATURE, F	PRESSURE (psig)
0	6.50
2	7.52
4	8.60
6	9.66
8	10.79
10	11.96
12	13.17
14	14.42
16	15.72
18	17.06
20	18.45
22	19.88
24	21.37
26	22.90
28	24.48
30	26.11
32	27.80
34	29.53
36	31.32
38	33.17
40	35.08
42	37.04
44	39.06
46	41.14
48	43.28
50	45.48
52	47.74
54	50.07
56	52.47
58	54.93
60	57.46
62	60.06
64	62.73
66	65.47
68	68.29
70	71.18
72	74.14
74	77.18
76	80.30
78	83.49
80	86.17
82	90.13
84	93.57
86	97.09
88	100.70
90	104.40
92	108.18
94	112.06
96	116.02
98	120.08
100	124.23
102	128.47
104	132.81
106	137.25
108	141.79
110	146.43
112	151.17
114	156.01
116	160.96
118	166.01
120	171.17
122	176.45
124	181.83
126	187.32
128	192.93
130	198.66
132	204.50
134	210.47
136	216.55
138	222.76
140	229.09

Table 5B — HFC-134a Pressure — Temperature (C)

TEMPERATURE, C	PRESSURE GAGE (kPa)
-18.0	44.8
-16.7	51.9
-15.6	59.3
-14.4	66.6
-13.3	74.4
-12.2	82.5
-11.1	90.8
-10.0	99.4
-8.9	108.0
-7.8	118.0
-6.7	127.0
-5.6	137.0
-4.4	147.0
-3.3	158.0
-2.2	169.0
-1.1	180.0
0.0	192.0
1.1	204.0
2.2	216.0
3.3	229.0
4.4	242.0
5.0	248.0
5.6	255.0
6.1	261.0
6.7	269.0
7.2	276.0
7.8	284.0
8.3	290.0
8.9	298.0
9.4	305.0
10.0	314.0
11.1	329.0
12.2	345.0
13.3	362.0
14.4	379.0
15.6	396.0
16.7	414.0
17.8	433.0
18.9	451.0
20.0	471.0
21.1	491.0
22.2	511.0
23.3	532.0
24.4	554.0
25.6	576.0
26.7	598.0
27.8	621.0
28.9	645.0
30.0	669.0
31.1	694.0
32.2	720.0
33.3	746.0
34.4	773.0
35.6	800.0
36.7	828.0
37.8	857.0
38.9	886.0
40.0	916.0
41.1	946.0
42.2	978.0
43.3	1010.0
44.4	1042.0
45.6	1076.0
46.7	1110.0
47.8	1145.0
48.9	1180.0
50.0	1217.0
51.1	1254.0
52.2	1292.0
53.3	1330.0
54.4	1370.0
55.6	1410.0
56.7	1451.0
57.8	1493.0
58.9	1536.0
60.0	1580.0

Chiller Dehydration — Dehydration is recommended if the chiller has been open for a considerable period of time, if the chiller is known to contain moisture, or if there has been a complete loss of chiller holding charge or refrigerant pressure.

⚠ CAUTION

Do not start or megohm-test the compressor motor or oil pump motor, even for a rotation check, if the chiller is under dehydration vacuum. Insulation breakdown and severe damage may result.

⚠ WARNING

Inside-delta type starters must be disconnected by an isolation switch before placing the machine under a vacuum because one lead of each phase is live with respect to ground even though there is not a complete circuit to run the motor. To be safe, isolate any starter before evacuating the chiller if you are not sure if there are live leads to the hermetic motor.

Dehydration can be done at room temperatures. Using a cold trap (Fig. 28) may substantially reduce the time required to complete the dehydration. The higher the room temperature, the faster dehydration takes place. At low room temperatures, a very deep vacuum is required to boil off any moisture. If low ambient temperatures are involved, contact a qualified service representative for the dehydration techniques required.

Perform dehydration as follows:

1. Connect a high capacity vacuum pump (5 cfm [.002 m^3/s] or larger is recommended) to the refrigerant charging valve (Fig. 2). Tubing from the pump to the chiller should be as short in length and as large in diameter as possible to provide least resistance to gas flow.
2. Use an absolute pressure manometer or a wet bulb vacuum indicator to measure the vacuum. Open the shutoff valve to the vacuum indicator only when taking a reading. Leave the valve open for 3 minutes to allow the indicator vacuum to equalize with the chiller vacuum.
3. If the entire chiller is to be dehydrated, open all isolation valves (if present).
4. With the chiller ambient temperature at 60 F (15.6 C) or higher, operate the vacuum pump until the manometer reads 29.8 in. Hg vac, ref 30 in. bar. (0.1 psia)(–100.61 kPa) or a vacuum indicator reads 35 F (1.7 C). Operate the pump an additional 2 hours.

   Do not apply a greater vacuum than 29.82 in. Hg vac (757.4 mm Hg) or go below 33 F (.56 C) on the wet bulb vacuum indicator. At this temperature and pressure, isolated pockets of moisture can turn into ice. The slow rate of evaporation (sublimation) of ice at these low temperatures and pressures greatly increases dehydration time.
5. Valve off the vacuum pump, stop the pump, and record the instrument reading.
6. After a 2-hour wait, take another instrument reading. If the reading has not changed, dehydration is complete. If the reading indicates vacuum loss, repeat Steps 4 and 5.
7. If the reading continues to change after several attempts, perform a leak test up to the maximum 160 psig (1103 kPa) pressure. Locate and repair the leak, and repeat dehydration.

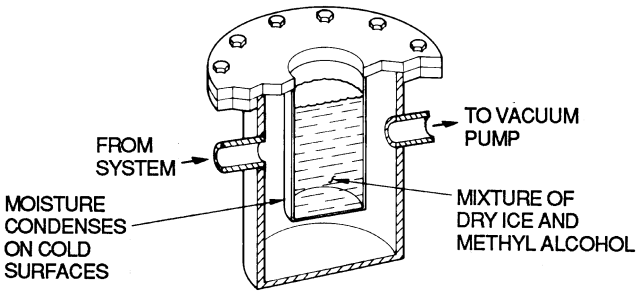

Fig. 28 — Dehydration Cold Trap

Inspect Water Piping — Refer to piping diagrams provided in the certified drawings and the piping instructions in the 19XR Installation Instructions manual. Inspect the piping to the cooler and condenser. Be sure that the flow directions are correct and that all piping specifications have been met.

Piping systems must be properly vented with no stress on waterbox nozzles and covers. Water flows through the cooler and condenser must meet job requirements. Measure the pressure drop across the cooler and the condenser.

⚠ CAUTION

Water must be within design limits, clean, and treated to ensure proper chiller performance and to reduce the potential of tube damage due to corrosion, scaling, or erosion. Carrier assumes no responsibility for chiller damage resulting from untreated or improperly treated water.

Check Optional Pumpout Compressor Water Piping — If the optional pumpout storage tank and/or pumpout system are installed, check to ensure the pumpout condenser water has been piped in. Check for field-supplied shutoff valves and controls as specified in the job data. Check for refrigerant leaks on field-installed piping. See Fig. 26 and 27.

Check Relief Valves — Be sure the relief valves have been piped to the outdoors in compliance with the latest edition of ANSI/ASHRAE Standard 15 and applicable local safety codes. Piping connections must allow for access to the valve mechanism for periodic inspection and leak testing.

The 19XR relief valves are set to relieve at the 185 psig (1275 kPa) chiller design pressure.

Inspect Wiring

⚠ WARNING

Do not check the voltage supply without proper equipment and precautions. Serious injury may result. Follow power company recommendations.

⚠ CAUTION

Do not apply any kind of test voltage, even for a rotation check, if the chiller is under a dehydration vacuum. Insulation breakdown and serious damage may result.

1. Examine the wiring for conformance to the job wiring diagrams and all applicable electrical codes.

2. On low-voltage compressors (600 v or less) connect a voltmeter across the power wires to the compressor starter and measure the voltage. Compare this reading to the voltage rating on the compressor and starter nameplates.
3. Compare the ampere rating on the starter nameplate to rating on the compressor nameplate. The overload trip amps must be 108% to 120% of the rated load amps.
4. The starter for a centrifugal compressor motor must contain the components and terminals required for PIC II refrigeration control. Check the certified drawings.
5. Check the voltage to the following components and compare it to the nameplate values: oil pump contact, pumpout compressor starter, and power panel.
6. Ensure that fused disconnects or circuit breakers have been supplied for the oil pump, power panel, and pumpout unit.
7. Ensure all electrical equipment and controls are properly grounded in accordance with job drawings, certified drawings, and all applicable electrical codes.
8. Ensure the customer's contractor has verified proper operation of the pumps, cooling tower fans, and associated auxiliary equipment. This includes ensuring motors are properly lubricated and have proper electrical supply and proper rotation.
9. For field-installed starters only, test the chiller compressor motor and its power lead insulation resistance with a 500-v insulation tester such as a megohmmeter. (Use a 5000-v tester for motors rated over 600 v.) Factory-mounted starters do not require a megohm test.
   a. Open the starter main disconnect switch and follow lockout/tagout rules.

⚠ CAUTION

If the motor starter is a solid-state starter, the motor leads must be disconnected from the starter before an insulation test is performed. The voltage generated from the tester can damage the starter solid-state components.

   b. With the tester connected to the motor leads, take 10-second and 60-second megohm readings as follows:

      6-Lead Motor — Tie all 6 leads together and test between the lead group and ground. Next tie the leads in pairs: 1 and 4, 2 and 5, and 3 and 6. Test between each pair while grounding the third pair.

      3-Lead Motor — Tie terminals 1, 2, and 3 together and test between the group and ground.

   c. Divide the 60-second resistance reading by the 10-second reading. The ratio, or polarization index, must be one or higher. Both the 10- and 60-second readings must be at least 50 megohms.

      If the readings on a field-installed starter are unsatisfactory, repeat the test at the motor with the power leads disconnected. Satisfactory readings in this second test indicate the fault is in the power leads.

      NOTE: Unit-mounted starters do not have to be megohm tested.

10. Tighten all wiring connections to the plugs on the ISM and CCM modules.
11. On chillers with free-standing starters, inspect the power panel to ensure that the contractor has fed the wires into the bottom of the panel. Wiring into the top of the panel can cause debris to fall into the contactors. Clean and inspect the contactors if this has occurred.

Carrier Comfort Network Interface — The Carrier Comfort Network (CCN) communication bus wiring is supplied and installed by the electrical contractor. It consists of shielded, 3-conductor cable with drain wire.

The system elements are connected to the communication bus in a daisy chain arrangement. The positive pin of each system element communication connector must be wired to the positive pins of the system element on either side of it. The negative pins must be wired to the negative pins. The signal ground pins must be wired to the signal ground pins. See installation manual.

NOTE: Conductors and drain wire must be 20 AWG (American Wire Gage) minimum stranded, tinned copper. Individual conductors must be insulated with PVC, PVC/nylon, vinyl, Teflon, or polyethylene. An aluminum/polyester 100% foil shield and an outer jacket of PVC, PVC/nylon, chrome vinyl, or Teflon with a minimum operating temperature range of −4 F to 140 F (−20 C to 60 C) is required. See table below for cables that meet the requirements.

MANUFACTURER	CABLE NO.
Alpha	2413 or 5463
American	A22503
Belden	8772
Columbia	02525

When connecting the CCN communication bus to a system element, a color code system for the entire network is recommended to simplify installation and checkout. The following color code is recommended:

SIGNAL TYPE	CCN BUS CONDUCTOR INSULATION COLOR	CVC PLUG J1 PIN NO.
+	Red	1
Ground	White	2
–	Black	3

Check Starter

⚠ CAUTION

BE AWARE that certain automatic start arrangements *can engage the starter*. Open the disconnect *ahead* of the starter in addition to shutting off the chiller or pump.

Use the instruction and service manual supplied by the starter manufacturer to verify the starter has been installed correctly, to set up and calibrate the starter, and for complete troubleshooting information.

⚠ CAUTION

The main disconnect on the starter front panel may not deenergize all internal circuits. Open all internal and remote disconnects before servicing the starter.

MECHANICAL STARTER

1. Check all field wiring connections for tightness, clearance from moving parts, and correct connection.
2. Check the contactor(s) to ensure they move freely. Check the mechanical interlock between contactors to ensure that 1S and 2M contactors cannot be closed at the same time. Check all other electro-mechanical devices, such as relays, for free movement. If the devices do not move freely, contact the starter manufacturer for replacement components.
3. Some dashpot-type magnetic overload relays must be filled with oil on the jobsite. If the starter is equipped with devices of this type, remove the fluid cups from these magnetic overload relays. Add the dashpot oil to the cups according to the instructions supplied with the starter. The oil is usually shipped in a small container attached to the starter frame near the relays. Use only the dashpot oil supplied with the starter. Do not substitute.

   Solid-state overload relays do not have oil.
4. Reapply starter control power *(not main chiller power*) to check the electrical functions.

   Ensure the starter (with relay 1CR closed) goes through a complete and proper start cycle.

BENSHAW, INC. REDISTART MICRO SOLID-STATE STARTER

⚠ WARNING

This equipment is at line voltage when AC power is connected. Pressing the STOP button does not remove voltage.

1. Ensure all wiring connections are properly terminated to the starter.
2. Verify the ground wire to the starter is installed properly and is sufficient size.
3. Verify the motors are properly grounded to the starter.
4. Ensure all of the relays are properly seated in their sockets.
5. Verify the proper ac input voltage is brought into the starter according to the certified drawings.
6. Apply power to the starter.

Oil Charge — The oil charge for the 19XR compressor depends on the compressor Frame size:

- Frame 2 compressor — 5 gal (18.9 L)
- Frame 3 compressor — 8 gal (30 L)
- Frame 4 compressor — 10 gal (37.8 L)
- Frame 5 compressor — 18 gal (67.8 L)

The chiller is shipped with oil in the compressor. When the sump is full, the oil level should be no higher than the middle of the upper sight glass, and minimum level is the bottom of the lower sight glass (Fig. 2). If oil is added, it must meet Carrier's specification for centrifugal compressor use as described in the Oil Specification section. Charge the oil through the oil charging valve located near the bottom of the transmission housing (Fig. 2). The oil must be pumped from the oil container through the charging valve due to higher refrigerant pressure. The pumping device must be able to lift from 0 to 200 psig (0 to 1380 kPa) or above unit pressure. Oil should only be charged or removed when the chiller is shut down.

Power Up the Controls and Check the Oil Heater — Ensure that an oil level is visible in the compressor before energizing the controls. A circuit breaker in the starter energizes the oil heater and the control circuit. When first powered, the CVC should display the default screen within a short period of time.

The oil heater is energized by powering the control circuit. This should be done several hours before start-up to minimize oil-refrigerant migration. The oil heater is controlled by the PIC II and is powered through a contactor in the power panel. Starters contain a separate circuit breaker to power the heater and the control circuit. This arrangement allows the heater to energize when the main motor circuit breaker is off for service work or extended shutdowns. The oil heater relay status (*OIL HEATER RELAY*) can be viewed on the COMPRESS table on the CVC. Oil sump temperature can be viewed on the CVC default screen.

SOFTWARE VERSION — The software part number is labeled on the backside of the CVC module. The software version also appears on the CVC configuration screen as the last two digits of the software part number.

Software Configuration

⚠ WARNING

Do not operate the chiller before the control configurations have been checked and a Control Test has been satisfactorily completed. Protection by safety controls cannot be assumed until all control configurations have been confirmed.

As the 19XR unit is configured, all configuration settings should be written down. A log, such as the one shown on pages CL-1 to CL-12, provides a convenient list for configuration values.

Input the Design Set Points — Access the CVC set point screen and view/modify the base demand limit set point, and *either* the LCW set point *or* the ECW set point. The PIC II can control a set point to either the leaving or entering chilled water. This control method is set in the EQUIPMENT SERVICE (TEMP_CTL) table.

Input the Local Occupied Schedule (OCCPC01S) — Access the schedule OCCPC01S screen on the CVC and set up the occupied time schedule according to the customer's requirements. If no schedule is available, the default is factory set for 24 hours occupied, 7 days per week including holidays.

For more information about how to set up a time schedule, see the Controls section, page 10.

The CCN Occupied Schedule (OCCPC03-99S) should be configured if a CCN system is being installed or if a secondary time schedule is needed.

NOTE: The default CCN Occupied Schedule OCCPC03S is configured to be unoccupied.

Input Service Configurations — The following configurations require the CVC screen to be in the SERVICE portion of the menu.

- password
- input time and date
- CVC configuration
- service parameters
- equipment configuration
- automated control test

PASSWORD — When accessing the SERVICE tables, a password must be entered. All CVC are initially set for a password of 1-1-1-1.

INPUT TIME AND DATE — Access the TIME AND DATE table on the SERVICE menu. Input the present time of day, date, and day of the week. The *HOLIDAY TODAY* parameter should only be configured to YES if the present day is a holiday.

NOTE: Because a schedule is integral to the chiller control sequence, the chiller will not start until the time and date have been set.

CHANGE CVC CONFIGURATION IF NECESSARY — From the SERVICE table, access the CVC CONFIGURATION screen. From there, view or modify the CVC CCN address, change to English or SI units, and change the password. If there is more than one chiller at the jobsite, change the CVC address on each chiller so that each chiller has its own address. Note and record the new address. Change the screen to SI units as required, and change the password if desired.

TO CHANGE THE PASSWORD — The password may be changed from the CVC CONFIGURATION screen.

1. Press the MENU and SERVICE softkeys. Enter the current password and highlight CVC CONFIGURATION. Press the SELECT softkey. Only the last 5 entries on the CVC CONFIG screen can be changed: *BUS #*, *ADDRESS #*, *BAUD RATE*, *US IMP/METRIC*, and *PASSWORD*.
2. Use the ENTER softkey to scroll to *PASSWORD*. The first digit of the password is highlighted on the screen.
3. To change the digit, press the INCREASE or DECREASE softkey. When the desired digit is seen, press the ENTER softkey.
4. The next digit is highlighted. Change it, and the third and fourth digits in the same way the first was changed.
5. After the last digit is changed, the CVC goes to the *BUS* parameter. Press the EXIT softkey to leave that screen and return to the SERVICE menu.

⚠ CAUTION

Be sure to remember the password. Retain a copy for future reference. Without the password, access to the SERVICE menu will not be possible unless the CVC_PSWD menu on the STATUS screen is accessed by a Carrier representative.

TO CHANGE THE CVC DISPLAY FROM ENGLISH TO METRIC UNITS — By default, the CVC displays information in English units. To change to metric units, access the CVC CONFIGURATION screen:

1. Press the MENU and SERVICE softkeys. Enter the password and highlight CVC CONFIGURATION. Press the SELECT softkey.
2. Use the ENTER softkey to scroll to *US IMP/METRIC*.
3. Press the softkey that corresponds to the units desired for display on the CVC (e.g., US or METRIC).

MODIFY CONTROLLER IDENTIFICATION IF NECESSARY — The CVC module address can be changed from the CVC CONFIGURATION screen. Change this address for each chiller if there is more than one chiller at the jobsite. Write the new address on the CVC module for future reference.

INPUT EQUIPMENT SERVICE PARAMETERS IF NECESSARY — The EQUIPMENT SERVICE table has six service tables.

Configure SERVICE Tables — Access the SERVICE tables, depicted on the next page, to modify or view the following to job site parameters:

PARAMETER	TABLE
Starter Type	ISM_CONF — Select 0 for full voltage, 1 for reduced voltage, or 2 for solid state/ variable frequency drive.
Motor Rated Line Voltage	ISM_CONF — Enter actual line voltage from power screen.
Volt Transformer Ratio	ISM_CONF — Enter ratio (reduced to a ratio to 1) of power transformer wired to terminal J3 of ISM. If no transformer is used enter 1.
Motor Rated Load Amps	ISM_CONF — Per chiller identification nameplate data.
Motor Locked Rotor Trip	ISM_CONF — Per chiller identification nameplate data. Enter locked rotor delta amps (LR AMPS D-).
Starter LRA Rating	ISM_CONF — Enter value from nameplate in starter cabinet.
Motor Current CT Ratio	ISM_CONF — Enter ratio (reduced to a ratio to 1) of current transformers wired to terminal J4 of ISM.
Ground Fault Current Transformers	ISM_CONF — Enter 0 if three ground fault CTs are wired to terminal J5 of ISM. Enter 1 if one ground fault CT is used.
Ground Fault CT Ratio	ISM_CONF — Enter ratio (reduced to a ratio to 1) of ground fault CT.
Single Cycle Dropout	ISM_CONF — ENABLE if motor protection required from drop in line voltage within one cycle.
Line Frequency	ISM_CONF — Enter YES for 60 Hz or NO for 50 Hz.
Line Frequency Faulting	ISM_CONF — ENABLE if motor protection required for drop in line frequency.
Surge LImiting or Hot Gas Byapss Option	OPTIONS — Enter 1 if HGBP is installed.
Minimum Load Points (T1/P1)	OPTIONS — Per job data — See modify load points section.
Full (Maximum) Load Points (T2/P2)	OPTIONS — Per job data — See modify load points section.
Chilled Medium	SEETUP1 — Enter water or brine.
Evaporator Refrigerant Trippoint	SETUP1 — Usually 3° F (1.7° C) below design refrigerant temperature.
Evaporator Flow Delta P Cutout	SETUP1 — Enter 50% of design pressure drop to 0.5 psi (3.4 kPa).*
Condenser Flow Delta P Cutout	SETUP1 — Enter 50% of design pressure drop to 0.5 psi (3.4 kPa).*
Diffuser Option	SETUP2 — ENABLE for 5 size compressor only. See model number nomenclature.
Diffuser Full Span mA Rating	SETUP2 — Enter diffuser actuator full span mA rating for 5 size compressor only. Value is located on label on side of diffuser actuator motor.
Motor Rated Kilowatts	RAMP_DEM — Enter value from chiller requisition form (product data submittal) if kilowatt ramp demand is enabled.

*With variable flow systems this point may be configured to the lower end of the range.

NOTE: Other parameters on these screens are normally left at the default settings; however, they may be changed by the operator as required. The time and persistence settings on the ISM_CONF table can be adjusted to increase or decrease the sensitivity to a fault condition. Increasing time or persistence decreases sensitivity. Decreasing time or persistence increases sensitivity to the fault condition.

Modify Minimum and Maximum Load Points (ΔT1/P1; Δ T2/P2) If Necessary — These pairs of chiller load points, located on the OPTIONS screen, determine when to limit guide vane travel or open the hot gas bypass valve when surge prevention is needed. These points should be set based on individual chiller operating conditions.

If after configuring a value for these points, surge prevention is operating too soon or too late for conditions, these parameters should be changed by the operator.

An example of such a configuration is shown below.

Refrigerant: HCFC-134a

Estimated Minimum Load Conditions:

44 F (6.7 C) LCW
45.5 F (7.5 C) ECW
43 F (6.1 C) Suction Temperature
70 F (21.1 C) Condensing Temperature

Estimated Maximum Load Conditions:

44 F (6.7 C) LCW
54 F (12.2 C) ECW
42 F (5.6 C) Suction Temperature
98 F (36.7 C) Condensing Temperature

Calculate Maximum Load — To calculate the maximum load points, use the design load condition data. If the chiller full load cooler temperature difference is more than 15 F (8.3 C), estimate the refrigerant suction and condensing temperatures at this difference. Use the proper saturated pressure and temperature for the particular refrigerant used.

Suction Temperature:
42 F (5.6 C) = 37 psig (255 kPa) saturated refrigerant pressure (HFC-134a)

Condensing Temperature:
98 F (36.7 C) = 120 psig (1827 kPa) saturated refrigerant pressure (HFC-134a)

Maximum Load ΔT2:
54 – 44 = 10° F (12.2 – 6.7 = 5.5° C)

Maximum Load ΔP2:
120 – 37 = 83 psid (827 – 255 = 572 kPad)

To avoid unnecessary surge prevention, add about 10 psid (70 kPad) to ΔP2 from these conditions:
ΔT2 = 10° F (5.5° C)
ΔP2 = 93 psid (642 kPad)

Calculate Minimum Load — To calculate the minimum load conditions, estimate the temperature difference the cooler will have at 10% load, then estimate what the suction and condensing temperatures will be at this point. Use the proper saturated pressure and temperature for the particular refrigerant used.

Suction Temperature:
43 F (6.1 C) = 38 psig (262 kPa) saturated refrigerant pressure (HFC-134a)

Condensing Temperature:
70 F (21.1 C) = 71 psig (490 kPa) saturated refrigerant pressure (HFC-134a)

Minimum Load ΔT1 (at 20% Load): 2 F (1.1 C)

Minimum Load ΔP1:
71 – 38 = 33 psid (490 – 262 = 228 kPad)

Again, to avoid unnecessary surge prevention, add 20 psid (140 kPad) at ΔP1 from these conditions:
ΔT1 = 2 F (1.1 C)
ΔP1 = 53 psid (368 kPad)

If surge prevention occurs too soon or too late:

LOAD	SURGE PREVENTION OCCURS TOO SOON	SURGE PREVENTION OCCURS TOO LATE
At low loads (<50%)	Increase P1 by 10 psid (70 kPad)	Decrease P1 by 10 psid (70 kPad)
At high loads (>50%)	Increase P2 by 10 psid (70 kPad)	Decrease P2 by 10 psid (70 kPad)

The differential pressure (ΔP) and temperature (ΔT) can be monitored during chiller operation by viewing *ACTIVE DELTA P* and *ACTIVE DELTA T* (HEAT_EX screen). Comparing *SURGE/AGBP DELTA T* to active *DETLA T* will determine when the SURGE PREVENTION function will occur. The smaller the difference between the *SURGE/AGBP DELTA T* and the *ACTIVE DELTA T* values, the closer to surge prevention.

CONFIGURE DIFFUSER CONTROL IF NECESSARY — If the compressor is equipped with a variable diffuser, (5 size compressor) access the SETUP2 screen. Scroll to *DIFFUSER CONTROL* and press the ENABLE softkey. Enter the correct diffuser and guide vane values (*GUIDE VANE 25% LOAD PT, GUIDE VANE 50 % LOAD PT, GUIDE VANE 75% LOAD PT, DIFFUSER 25% LOAD PT, DIFFUSER 50% LOAD PT, DIFFUSER 75% LOAD PT*). Default values are located on the label inside the control panel. See Fig. 10. To obtain proper settings for diffuser control, contact a Carrier Engineering representative.

Compressors with variable diffuser control have actuators tested and stamped with the milliamp (mA) value that results in 100% actuator rotation. This valve is configured on the SETUP2 screen. It is labeled *DIFFUSER FULL SPAN mA.*

MODIFY EQUIPMENT CONFIGURATION IF NECESSARY — The EQUIPMENT SERVICE table has screens to select, view, or modify parameters. Carrier's certified drawings have the configuration values required for the jobsite. Modify these values only if requested.

SERVICE Screen Modifications — Change the values on these screens according to specific job data. See the certified drawings for the correct values. Modifications can include:

- chilled water reset
- entering chilled water control (Enable/Disable)
- 4 to 20 mA demand limit
- auto restart option (Enable/Disable)
- remote contact option (Enable/Disable)

Owner-Modified CCN Tables— The following EQUIPMENT CONFIGURATION screens are described for reference only.

OCCDEFCS — The OCCDEFCS screen contains the Local and CCN time schedules, which can be modified here or on the SCHEDULE screen as described previously.

HOLIDAYS — From the HOLIDAYS screen, the days of the year that holidays are in effect can be configured. See the holiday paragraphs in the Controls section for more details.

BRODEF — The BRODEF screen defines the start and end of daylight savings time. Enter the dates for the start and end of daylight savings if required for your location. BRODEF also activates the Broadcast function which enables the holiday periods that are defined on the CVC to take effect.

Other Tables — The CONSUME, and RUNTIME screens contain parameters used with a CCN system. See the applicable CCN manual for more information on these screens. These tables can only be defined from a CCN Building Supervisor.

Perform a Control Test — Check the safety controls status by performing an automated control test. Access the CONTROL TEST table and select a test to be performed function (Table 6).

The Automated Control Test checks all outputs and inputs for function. The compressor must be in the OFF mode to operate the controls test. The compressor can be put in OFF mode by pressing the STOP push-button on the CVC. Each test asks the operator to confirm the operation is occurring and whether or not to continue. If an error occurs, the operator can try to address the problem as the test is being done or note the problem and proceed to the next test.

NOTE: Enter guide vane calibration to calibrate guide input on CCM (Plug J4 upper terminal 9 and 10).

NOTE: If during the control test the guide vanes do not open, verify the low pressure alarm is not active. (An active low pressure alarm causes the guide vanes to close.)

NOTE: The oil pump test will not energize the oil pump if cooler pressure is below –5 psig (–35 kPa).

When the control test is finished or the EXIT softkey is pressed, the test stops, and the CONTROL TEST menu displays. If a specific automated test procedure is not completed, access the particular control test to test the function when ready. The CONTROL TEST menu is described in the table below.

CCM Pressure Thermistors	Check of all thermistors.
CCM Pressure Transducers	Check of all transducers.
Pump	Checks operation of pump outputs; pumps are activated. Also tests associated inputs such as flow or pressure.
Discrete ouputs	Activation of all on/off outputs individually.
Guide Vane	Check of the guide vane operation.
Diffuser Actuator*	Check of the diffuser actuator.
Pumpdown/Lockout	Pumpdown prevents the low refrigerant alarm during evacuation so refrigerant can be removed form the unit. Also locks the compressor off and starts the water pumps.
Terminate Lockout	To charge refrigerant and enable the chiller to run after pumpdown lockout.
Guide Vane Calibration	Calibrates guide vane input on CCM.

*Diffuser tests function only on size 5 compressor with diffuser control enabled.

NOTE: During any of the tests, an out-of-range reading will have an asterisk (*) next to the reading and a message will be displayed.

Check Optional Pumpout System Controls and Compressor — Controls include an on/off switch, a 3-amp fuse, the compressor overloads, an internal thermostat, a compressor contactor, and a refrigerant high pressure cutout. The high pressure cutout is factory set to open at 161 psig (1110 kPa) and reset at 130 psig (896 kPa). Ensure the water-cooled condenser has been connected. Loosen the compressor holddown bolts to allow free spring travel. Open the compressor suction and discharge the service valves. Ensure oil is visible in the compressor sight glass. Add oil if necessary.

See the Pumpout and Refrigerant Transfer Procedures and Optional Pumpout System Maintenance sections, pages 62 and 68, for details on the transfer of refrigerant, oil specifications, etc.

Table 6 — Control Test Menu Functions

TESTS TO BE PERFORMED	DEVICES TESTED
1. CCM Thermistors	Entering Chilled Water Leaving Chilled Water Entering Condenser Water Leaving Condenser Water Remote Reset Sensor Comp Discharge Temp Comp Thrust Bearing Temp Oil Sump Temp Comp Motor Winding Temp Spare Temperature 1 Space Temperature 2
2. CCM Pressure Transducers	Evaporator Pressure Condenser Pressure Oil Pump Delta P Spare Pressure Delta P Condenser Water Delta P Transducer Voltage Ref
3. Pumps	Oil Pump — Confirm pressure Chilled Water — Confirm Delta P Condenser Water — Confirm Delta P
4. Discrete Outputs	Oil Heater Relay Hot Gas Bypass Relay Tower Fan Relay Low Tower Fan Relay High Alarm Relay Shunt Trip Relay
5. Guide Vane Actuator	Open/Close
6. Diffuser Actuator	Open/Close
7. Pumpdown/Lockout	When using pumpdown/lockout, observe freeze up precautions when removing charge: Instructs operator which valves to close and when. Starts chilled water and condenser water pumps and confirms flows. Monitors Evaporator pressure Condenser pressure Evaporator temperature during pumpout procedures Turns pumps off after pumpdown. Locks out compressor.
8. Terminate Lockout	Starts pumps and monitors flows. Instructs operator which valves to open and when. Monitors Evaporator pressure Condenser pressure Evaporator temperature during charging process Terminates compressor lockout.

High Altitude Locations — Because the chiller is initially calibrated at sea level, it is necessary to recalibrate the pressure transducers if the chiller has been moved to a high altitude location. See the calibration procedure in the Troubleshooting Guide section.

Charge Refrigerant into Chiller

⚠ CAUTION

The transfer, addition, or removal of refrigerant in spring isolated chillers may place severe stress on external piping if springs have not been blocked in both up and down directions.

⚠ WARNING

Always operate the condenser and chilled water pumps during charging operations to prevent freeze-ups.

The standard 19XR chiller is shipped with the refrigerant already charged in the vessels. However, the 19XR may be ordered with a nitrogen holding charge of 15 psig (103 kPa). Evacuate the nitrogen from the entire chiller, and charge the chiller from refrigerant cylinders.

CHILLER EQUALIZATION WITHOUT A PUMPOUT UNIT

⚠ WARNING

When equalizing refrigerant pressure on the 19XR chiller after service work or during the initial chiller start-up, *do not use the discharge isolation valve to equalize.* Either the motor cooling isolation valve or the charging hose (connected between the pumpout valves on top of the cooler and condenser) should be used as the equalization valve.

To equalize the pressure differential on a refrigerant isolated 19XR chiller, use the terminate lockout function of the CONTROL TEST on the SERVICE menu. This helps to turn on pumps and advises the operator on proper procedures.

The following steps describe how to equalize refrigerant pressure in an isolated 19XR chiller without a pumpout unit.

1. Access terminate lockout function on the CONTROL TEST screen.
2. IMPORTANT: Turn on the chilled water and condenser water pumps to prevent freezing.
3. Slowly open the refrigerant cooling isolation valve. The chiller cooler and condenser pressures will gradually equalize. This process takes approximately 15 minutes.
4. Once the pressures have equalized, the cooler isolation valve, the condenser isolation valve, and the hot gas isolation valve may now be opened. Refer to Fig. 26 and 27, for the location of the valves.

⚠ WARNING

Whenever turning the discharge isolation valve, be sure to reattach the valve locking device. This prevents the valve from opening or closing during service work or during chiller operation.

CHILLER EQUALIZATION WITH PUMPOUT UNIT — The following steps describe how to equalize refrigerant pressure on an isolated 19XR chiller using the pumpout unit.

1. Access the terminate lockout function on the CONTROL TEST screen.
2. IMPORTANT: Turn on the chilled water and condenser water pumps to prevent possible freezing.
3. Open valve 4 on the pumpout unit and open valves 1a and 1b on the chiller cooler and condenser, Fig. 26 and 27. Slowly open valve 2 on the pumpout unit to equalize the pressure. This process takes approximately 15 minutes.
4. Once the pressures have equalized, the discharge isolation valve, cooler isolation valve, optional hot gas bypass isolation valve, and the refrigerant isolation valve can be opened. Close valves 1a and 1b, and all pumpout unit valves.

⚠ WARNING

Whenever turning the discharge isolation valve, be sure to reattach the valve locking device. This prevents the valve from opening or closing during service work or during chiller operation.

The full refrigerant charge on the 19XR will vary with chiller components and design conditions, as indicated on the job data specifications. An approximate charge may be determined by adding the condenser charge to the cooler charge as listed in Table 7.

Table 7 — Refrigerant (HFC-134a) Charge

COOLER CODE	REFRIGERANT CHARGE		CONDENSER CODE	REFRIGERANT CHARGE	
	lb	kg		lb	kg
10	290	132	**10**	200	91
11	310	141	**11**	200	91
12	330	150	**12**	200	91
15	320	145	**15**	250	113
16	340	154	**16**	250	113
17	370	168	**17**	250	113
20	345	157	**20**	225	102
21	385	175	**21**	225	102
22	435	197	**22**	225	102
30	350	159	**30**	260	118
31	420	190	**31**	260	118
32	490	222	**32**	260	118
35	400	181	**35**	310	141
36	480	218	**36**	310	141
37	550	250	**37**	310	141
40	560	254	**40**	280	127
41	630	286	**41**	280	127
42	690	313	**42**	280	127
45	640	290	**45**	330	150
46	720	327	**46**	330	150
47	790	358	**47**	330	150
50	750	340	**50**	400	181
51	840	381	**51**	400	181
52	900	408	**52**	400	181
55	870	395	**55**	490	222
56	940	426	**56**	490	222
57	980	445	**57**	490	222
60	940	426	**60**	420	190
61	980	445	**61**	420	190
62	1020	463	**62**	420	190
65	1020	463	**65**	510	231
66	1060	481	**66**	510	231
67	1090	494	**67**	510	231
70	1220	553	**70**	780	354
71	1340	608	**71**	780	354
72	1440	653	**72**	780	354
75	1365	619	**75**	925	420
76	1505	683	**76**	925	420
77	1625	737	**77**	925	420
80	1500	680	**80**	720	327
81	1620	735	**81**	720	327
82	1730	785	**82**	720	327
85	1690	766	**85**	860	390
86	1820	825	**86**	860	390
87	1940	880	**87**	860	390

⚠ WARNING

Always operate the condenser and chilled water pumps whenever charging, transferring, or removing refrigerant from the chiller.

Use the CONTROL TEST terminate lockout function to monitor conditions and start the pumps.

If the chiller has been shipped with a holding charge, the refrigerant is added through the refrigerant charging valve (Fig. 26 and 27, valve 7) or to the pumpout charging connection. First evacuate the nitrogen holding charge from the chiller vessels. Charge the refrigerant as a gas until the system pressure exceeds 35 psig (141 kPa) for HFC-134a. After the chiller is beyond this pressure the refrigerant should be charged as a liquid until all the recommended refrigerant charge has been added.

TRIMMING REFRIGERANT CHARGE — The 19XR is shipped with the correct charge for the design duty of the chiller. Trimming the charge can best be accomplished when the design load is available. To trim the charge, check the temperature difference between the leaving chilled water temperature and cooler refrigerant temperature at full load design conditions. If necessary, add or remove refrigerant to bring the temperature difference to design conditions or minimum differential.

Table 7 lists the 19XR chiller refrigerant charges for each cooler and condenser code. Total refrigerant charge is the sum of the cooler and condenser charge.

INITIAL START-UP

Preparation — Before starting the chiller, verify:

1. Power is on to the main starter, oil pump relay, tower fan starter, oil heater relay, and the chiller control panel.
2. Cooling tower water is at proper level and at-or-below design entering temperature.
3. Chiller is charged with refrigerant and all refrigerant and oil valves are in their proper operating positions.
4. Oil is at the proper level in the reservoir sight glasses.
5. Oil reservoir temperature is above 140 F (60 C) or refrigerant temperature plus 50° F (28° C).
6. Valves in the evaporator and condenser water circuits are open.

   NOTE: If the pumps are not automatic, ensure water is circulating properly.

   ⚠ WARNING

   Do not permit water or brine that is warmer than 110 F (43 C) to flow through the cooler or condenser. Refrigerant overpressure may discharge through the relief valves and result in the loss of refrigerant charge.

7. Access the CONTROL TEST screen. Scroll down on the *TERMINATE LOCKOUT* option. Press the SELECT (to enable the chiller to start) and answer YES to restart unit to operating mode. The chiller is locked out at the factory in order to prevent accidental start-up.

Dry Run to Test Start-Up Sequence

1. Disengage the main motor disconnect on the starter front panel. This should only disconnect the motor power. Power to the controls, oil pump, and starter control circuit should still be energized.
2. Observe the default screen on the CVC: the Status message in the upper left-hand corner reads, ‘‘Manually Stopped.’’ Press the CCN or LOCAL softkey to start. If the chiller controls do not go into a start mode, go to the Schedule screen and override the schedule or change the occupied time. Press the LOCAL softkey to begin the start-up sequences.
3. Verify the chilled water and condenser water pumps have energized.
4. Verify the oil pump has started and is pressurizing the lubrication system. After the oil pump has run about 11 seconds, the starter energizes and goes through its start-up sequence.
5. Check the main contactor for proper operation.
6. The PIC II eventually shows an alarm for motor amps not sensed. Reset this alarm and continue with the initial start-up.

Check Motor Rotation

1. Engage the main motor disconnect on the front of the starter panel. The motor is now ready for a rotation check.
2. After the default screen status message states ‘‘Ready for Start’’ press the LOCAL softkey. The PIC II control performs start-up checks.
3. When the starter is energized and the motor begins to turn, check for clockwise motor rotation (Fig. 29).

IF THE MOTOR ROTATION IS CLOCKWISE, allow the compressor to come up to speed.

IF THE MOTOR ROTATION IS NOT CLOCKWISE (as viewed through the sight glass), reverse any 2 of the 3 incoming power leads to the starter and recheck the rotation.

NOTE: Solid-state starters have phase protection and do not permit a start if the phase is not correct. If this happens, a fault message appears on the CVC.

⚠ CAUTION

Do not check motor rotation during coastdown. Rotation may have reversed during equalization of vessel pressures.

CORRECT MOTOR ROTATION
IS CLOCKWISE WHEN VIEWED
THROUGH MOTOR SIGHT GLASS

TO CHECK ROTATION, ENERGIZE COMPRESSOR MOTOR MOMENTARILY.
DO NOT LET MACHINE DEVELOP CONDENSER PRESSURE.
CHECK ROTATION IMMEDIATELY.

ALLOWING CONDENSER PRESSURE TO BUILD OR CHECKING
ROTATION WHILE MACHINE COASTS DOWN MAY GIVE A FALSE
INDICATION DUE TO GAS PRESSURE EQUALIZING THROUGH COMPRESSOR.

Fig. 29 — Correct Motor Rotation

Check Oil Pressure and Compressor Stop

1. When the motor is at full speed, note the differential oil pressure reading on the CVC default screen. It should be between 18 and 30 psid (124 to 206 kPad).
2. Press the Stop button and listen for any unusual sounds from the compressor as it coasts to a stop.

To Prevent Accidental Start-Up — A chiller STOP override setting may be entered to prevent accidental start-up during service or whenever necessary. Access the MAINSTAT screen and using the NEXT or PREVIOUS softkeys, highlight the *CHILLER START/STOP* parameter. Override the current START value by pressing the SELECT softkey. Press the STOP softkey followed by the ENTER softkey. The word SUPVSR! displays on the CVC indicating the override is in place.

To restart the chiller the STOP override setting must be removed. Access the MAINSTAT screen and using NEXT or PREVIOUS softkeys highlight *CHILLER START/STOP*. The 3 softkeys that appear represent 3 choices:

- START — forces the chiller ON
- STOP — forces the chiller OFF
- RELEASE — puts the chiller under remote or schedule control.

To return the chiller to normal control, press the RELEASE softkey followed by the ENTER softkey. For more information, see Local Start-Up, page 44.

The default LID screen message line indicates which command is in effect.

Check Chiller Operating Condition — Check to be sure that chiller temperatures, pressures, water flows, and oil and refrigerant levels indicate the system is functioning properly.

Instruct the Customer Operator — Ensure the operator(s) understand all operating and maintenance procedures. Point out the various chiller parts and explain their function as part of the complete system.

COOLER-CONDENSER — Float chamber, relief valves, refrigerant charging valve, temperature sensor locations, pressure transducer locations, Schrader fittings, waterboxes and tubes, and vents and drains.

OPTIONAL PUMPOUT STORAGE TANK AND PUMPOUT SYSTEM — Transfer valves and pumpout system, refrigerant charging and pumpdown procedure, and relief devices.

MOTOR COMPRESSOR ASSEMBLY — Guide vane actuator, transmission, motor cooling system, oil cooling system, temperature and pressure sensors, oil sight glasses, integral oil pump, isolatable oil filter, extra oil and motor temperature sensors, synthetic oil, and compressor serviceability.

MOTOR COMPRESSOR LUBRICATION SYSTEM — Oil pump, cooler filter, oil heater, oil charge and specification, operating and shutdown oil level, temperature and pressure, and oil charging connections.

CONTROL SYSTEM — CCN and LOCAL start, reset, menu, softkey functions, CVC operation, occupancy schedule, set points, safety controls, and auxiliary and optional controls.

AUXILIARY EQUIPMENT — Starters and disconnects, separate electrical sources, pumps, and cooling tower.

DESCRIBE CHILLER CYCLES — Refrigerant, motor cooling, lubrication, and oil reclaim.

REVIEW MAINTENANCE — Scheduled, routine, and extended shutdowns, importance of a log sheet, importance of water treatment and tube cleaning, and importance of maintaining a leak-free chiller.

SAFETY DEVICES AND PROCEDURES — Electrical disconnects, relief device inspection, and handling refrigerant.

CHECK OPERATOR KNOWLEDGE — Start, stop, and shutdown procedures, safety and operating controls, refrigerant and oil charging, and job safety.

REVIEW THE START-UP, OPERATION, AND MAINTENANCE MANUAL.

OPERATING INSTRUCTIONS

Operator Duties

1. Become familiar with the chiller and related equipment before operating the chiller.
2. Prepare the system for start-up, start and stop the chiller, and place the system in a shutdown condition.
3. Maintain a log of operating conditions and document any abnormal readings.
4. Inspect the equipment, make routine adjustments, and perform a Control Test. Maintain the proper oil and refrigerant levels.
5. Protect the system from damage during shutdown periods.
6. Maintain the set point, time schedules, and other PIC functions.

Prepare the Chiller for Start-Up — Follow the steps described in the Initial Start-Up section, page 58.

To Start the Chiller

1. Start the water pumps, if they are not automatic.
2. On the CVC default screen, press the LOCAL or CCN softkey to start the system. If the chiller is in the OCCUPIED mode and the start timers have expired, the start sequence will start. Follow the procedure described in the Start-Up/Shutdown/Recycle section, page 44.

Check the Running System — After the compressor starts, the operator should monitor the CVC display and observe the parameters for normal operating conditions:

1. The oil reservoir temperature should be above 120 F (49 C) during shutdown and above 125 F (58 C) during compressor operation.
2. The bearing oil temperature accessed on the COMPRESS table should be 120 to 165 F (49 to 74 C). If the bearing temperature reads more than 180 F (83 C) with the oil pump running, stop the chiller and determine the cause of the high temperature. *Do not restart* the chiller until corrected.
3. The oil level should be visible anywhere in one of the two sight glasses. Foaming oil is acceptable as long as the oil pressure and temperature are within limits.
4. The oil pressure should be between 18 and 30 psid (124 to 207 kPad) differential, as seen on the CVC default screen. Typically the reading will be 18 to 25 psid (124 to 172 kPad) at initial start-up.
5. The moisture indicator sight glass on the refrigerant motor cooling line should indicate refrigerant flow and a dry condition.
6. The condenser pressure and temperature varies with the chiller design conditions. Typically the pressure will range between 100 and 210 psig (690 to 1450 kPa)

with a corresponding temperature range of 60 to 105 F (15 to 41 C). The condenser entering water temperature should be controlled below the specified design entering water temperature to save on compressor kilowatt requirements.

7. Cooler pressure and temperature also will vary with the design conditions. Typical pressure range will be between 60 and 80 psig (410 and 550 kPa), with temperature ranging between 34 and 45 F (1 and 8 C).
8. The compressor may operate at full capacity for a short time after the pulldown ramping has ended, even though the building load is small. The active electrical demand setting can be overridden to limit the compressor IkW, or the pulldown rate can be decreased to avoid a high demand charge for the short period of high demand operation. Pulldown rate can be based on load rate or temperature rate. It is accessed on the Equipment SERVICE screen, RAMP_DEM table (Table 2, Example 20).

To Stop the Chiller

1. The occupancy schedule starts and stops the chiller automatically once the time schedule is configured.
2. By pressing the STOP button for one second, the alarm light blinks once to confirm the button has been pressed. The compressor will then follow the normal shutdown sequence as described in the Controls section. The chiller will not restart until the CCN or LOCAL softkey is pressed. The chiller is now in the OFF control mode.

> IMPORTANT: Do not attempt to stop the chiller by opening an isolating knife switch. High intensity arcing may occur.

Do *not restart the chiller* until the problem is diagnosed and corrected.

After Limited Shutdown — No special preparations should be necessary. Follow the regular preliminary checks and starting procedures.

Preparation for Extended Shutdown — The refrigerant should be transferred into the pumpout storage tank (if supplied; see Pumpout and Refrigerant Transfer Procedures) to reduce chiller pressure and the possibility of leaks. Maintain a holding charge of 5 to 10 lbs (2.27 to 4.5 kg) of refrigerant or nitrogen to prevent air from leaking into the chiller.

If freezing temperatures are likely to occur in the chiller area, drain the chilled water, condenser water, and the pumpout condenser water circuits to avoid freeze-up. Keep the waterbox drains open.

Leave the oil charge in the chiller with the oil heater and controls energized to maintain the minimum oil reservoir temperature.

After Extended Shutdown — Ensure the water system drains are closed. It may be advisable to flush the water circuits to remove any soft rust which may have formed. This is a good time to brush the tubes and inspect the Schrader fittings on the waterside flow devices for fouling, if necessary.

Check the cooler pressure on the CVC default screen and compare it to the original holding charge that was left in the chiller. If (after adjusting for ambient temperature changes) any loss in pressure is indicated, check for refrigerant leaks. See Check Chiller Tightness section, page 46.

Recharge the chiller by transferring refrigerant from the pumpout storage tank (if supplied). Follow the Pumpout and Refrigerant Transfer Procedures section, this page. Observe freeze-up precautions.

Carefully make all regular preliminary and running system checks. Perform a Control Test before start-up. If the compressor oil level appears abnormally high, the oil may have absorbed refrigerant. Ensure that the oil temperature is above 140 F (60 C) or above the cooler refrigerant temperature plus 50° F (27° C).

Cold Weather Operation — When the entering condenser water temperature drops very low, the operator should automatically cycle the cooling tower fans off to keep the temperature up. Piping may also be arranged to bypass the cooling tower. The PIC II controls have a low limit tower fan output that can be used to assist in this control (terminal 11 and 12 on ISM).

Manual Guide Vane Operation — It is possible to manually operate the guide vanes in order to check control operation or to control the guide vanes in an emergency. Manual operation is possible by overriding the target guide vane position. Access the COMPRESS screen on the CVC and scroll down to highlight *TARGET GUIDE VANE POS*. To control the position, use the INCREASE or DECREASE softkey to adjust to the percentage of guide vane opening that is desired. Zero percent is fully closed; 100% is fully open. To release the guide vanes to automatic control, press the RELEASE softkey.

NOTE: Manual control increases the guide vane openings and overrides the pulldown rate during start-up. Motor current above the electrical demand setting, capacity overrides, and chilled water temperature below the control point override the manual target and close the guide vanes. For descriptions of capacity overrides and set points, see the Controls section.

Refrigeration Log — A refrigeration log (as shown in Fig. 30), is a convenient checklist for routine inspection and maintenance and provides a continuous record of chiller performance. It is also an aid when scheduling routine maintenance and diagnosing chiller problems.

Keep a record of the chiller pressures, temperatures, and liquid levels on a sheet similar to the one in Fig. 30. Automatic recording of PIC II data is possible by using CCN devices such as the Data Collection module and a Building Supervisor. Contact a Carrier representative for more information.

Date_____

REFRIGERATION LOG CARRIER 19XR HERMETIC CENTRIFUGAL REFRIGERATION MACHINE

Plant_____ **MACHINE MODEL NO.**_____ **MACHINE SERIAL NO.**_____ **REFRIGERANT TYPE**_____

DATE_____	COOLER							CONDENSER							COMPRESSOR					OPER-ATOR INITIALS	REMARKS
TIME	Refrigerant		Water					Refrigerant		Water					BEARING TEMP	Oil			Motor		
			Pressure			Temp				Pressure			Temp						FLA_____		
	Press.	Temp	In	Out	GPM	In	Out	Press.	Temp	In	Out	GPM	In	Out		Press. Diff.	Temp (reser-voir)	Level	Amperage (or vane position)		

REMARKS: Indicate shutdowns on safety controls, repairs made, oil or refrigerant added or removed, air exhausted and water drained from dehydrator. Include amounts.

Fig. 30 — Refrigeration Log

PUMPOUT AND REFRIGERANT TRANSFER PROCEDURES

Preparation — The 19XR may come equipped with an optional pumpout storage tank, pumpout system, or pumpout compressor. The refrigerant can be pumped for service work to either the chiller compressor vessel or chiller condenser vessel by using the optional pumpout system. If a pumpout storage tank is supplied, the refrigerant can be isolated in the storage tank. The following procedures describe how to transfer refrigerant from vessel to vessel and perform chiller evacuations.

⚠ WARNING

Always run the chiller cooler and condenser water pumps and always charge or transfer refrigerant as a gas when the chiller pressure is less than 30 psig (207 kPa). Below these pressures, liquid refrigerant flashes into gas, resulting in extremely low temperatures in the cooler/condenser tubes and possibly causing tube freeze-up.

⚠ WARNING

During transfer of refrigerant into and out of the optional storage tank, carefully monitor the storage tank level gage. Do not fill the tank more than 90% of capacity to allow for refrigerant expansion. Overfilling may result in damage to the tank or personal injury.

⚠ CAUTION

Do not mix refrigerants from chillers that use different compressor oils. Compressor damage can result.

Operating the Optional Pumpout Unit

1. Be sure that the suction and the discharge service valves on the optional pumpout compressor are open (backseated) during operation. Rotate the valve stem fully counterclockwise to open. Frontseating the valve closes the refrigerant line and opens the gage port to compressor pressure.
2. Ensure that the compressor holddown bolts have been loosened to allow free spring travel.
3. Open the refrigerant inlet valve on the pumpout compressor.
4. Oil should be visible in the pumpout unit compressor sight glass under all operating conditions and during shutdown. If oil is low, add oil as described under Optional Pumpout System Maintenance section, page 68. The pumpout unit control wiring schematic is detailed in Fig. 31.

TO READ REFRIGERANT PRESSURES during pumpout or leak testing:

1. The CVC display on the chiller control panel is suitable for determining refrigerant-side pressures and low (soft) vacuum. To assure the desired range and accuracy when measuring evacuation and dehydration, use a quality vacuum indicator or manometer. This can be placed on the Schrader connections on each vessel (Fig. 7) by removing the pressure transducer.
2. To determine pumpout storage tank pressure, a 30 in. -0-400 psi (-101-0-2769 kPa) gage is attached to the storage tank.
3. Refer to Fig. 26, 27, and 32 for valve locations and numbers.

⚠ CAUTION

Transfer, addition, or removal of refrigerant in spring-isolated chillers may place severe stress on external piping if springs have not been blocked in both up and down directions.

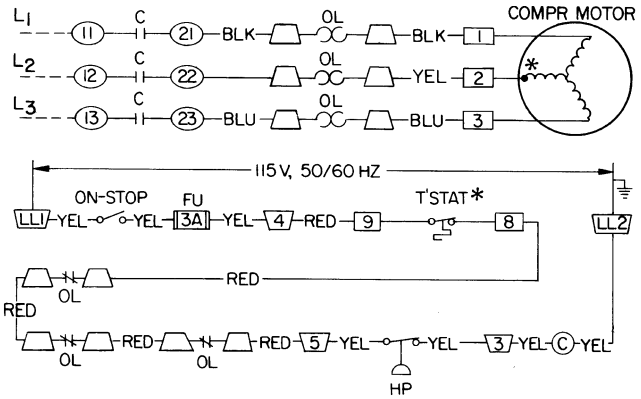

LEGEND

C	—	Contactor
FU	—	Fuse, 3 Amps
HP	—	High-Pressure Cutout
OL	—	Compressor Overload
T'STAT	—	Internal Thermostat

Compressor Terminal

Contactor Terminal

Overload Terminal

Pumpout Unit Terminal

*Bimetal thermal protector imbedded in motor winding.

Fig. 31 — 19XR Pumpout Unit Wiring Schematic

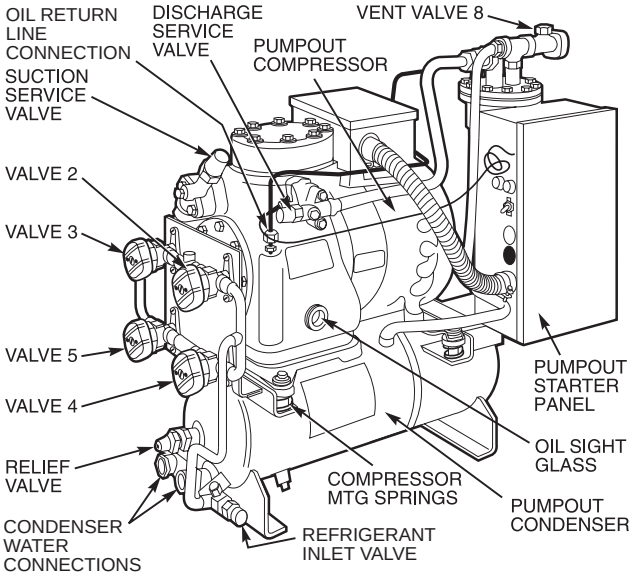

Fig. 32 — Optional Pumpout Unit

Chillers with Storage Tanks — If the chiller has isolation valves, leave them open for the following procedures. The letter ‘‘C’’ describes a closed valve. See Fig. 15, 16, 26, and 27.

TRANSFER REFRIGERANT FROM PUMPOUT STORAGE TANK TO CHILLER

1. Equalize refrigerant pressure.
   a. Use the PIC II terminate lockout function on the PUMPDOWN LOCKOUT screen, accessed from the CONTROL TEST table to turn on the water pumps and monitor pressures.

⚠ WARNING

If the chilled water and condenser water pumps are not controlled by the PIC II, these pumps must be started and stopped manually at the appropriate times during the refrigerant transfer procedure.

   b. Close pumpout unit valves 2, 4, 5, 8, and 10, and close chiller charging valve 7; open chiller isolation valves 11, 12, 13, and 14 (if present).
   c. Open pumpout unit/storage tank valves 3 and 6, open chiller valves 1a and 1b.

VALVE	1a	1b	2	3	4	5	6	7	8	10	11	12	13	14
CONDITION			C		C	C		C	C	C				

   d. Slowly open valve 5 to increase chiller pressure to 68 psig 35 psig (141 kPa) for HFC-134a. Feed refrigerant slowly to prevent freeze up.
   e. Open valve 5 fully after the pressure rises above the freeze point of the refrigerant. Open liquid line valves 7 and 10 until refrigerant pressure equalizes.

VALVE	1a	1b	2	3	4	5	6	7	8	10	11	12	13	14
CONDITION			C		C				C					

2. Transfer the remaining refrigerant.
   a. Close valve 5 and open valve 4.

VALVE	1a	1b	2	3	4	5	6	7	8	10	11	12	13	14
CONDITION			C			C			C					

   b. Turn off the chiller water pumps using the CVC (or manually, if necessary).
   c. Turn off the pumpout condenser water, and turn on the pumpout compressor to push liquid out of the storage tank.
   d. Close liquid line valve 7.
   e. Turn off the pumpout compressor.
   f. Close valves 3 and 4.
   g. Open valves 2 and 5.

VALVE	1a	1b	2	3	4	5	6	7	8	10	11	12	13	14
CONDITION				C	C			C	C					

   h. Turn on the pumpout condenser water.
   i. Run the pumpout compressor until the pumpout storage tank pressure reaches 5 psig (34 kPa) (18 in. Hg [40 kPa absolute] if repairing the tank).
   j. Turn off the pumpout compressor.
   k. Close valves 1a, 1b, 2, 5, 6, and 10.

VALVE	1a	1b	2	3	4	5	6	7	8	10	11	12	13	14
CONDITION	C	C	C	C	C	C	C	C	C	C				

   l. Turn off pumpout condenser water.

TRANSFER REFRIGERANT FROM CHILLER TO PUMPOUT STORAGE TANK

1. Equalize refrigerant pressure.
   a. Valve positions:

VALVE	1a	1b	2	3	4	5	6	7	8	10	11	12	13	14
CONDITION			C		C	C		C	C					

   b. Slowly open valve 5. When the pressures are equalized, open liquid line valve 7 to allow liquid refrigerant to drain by gravity into the pumpout storage tank.

VALVE	1a	1b	2	3	4	5	6	7	8	10	11	12	13	14
CONDITION			C		C				C					

2. Transfer the remaining liquid.
   a. Turn off the pumpout condenser water. Place the valves in the following positions:

VALVE	1a	1b	2	3	4	5	6	7	8	10	11	12	13	14
CONDITION				C	C				C					

   b. Run the pumpout compressor for approximately 30 minutes; then close valve 10.

VALVE	1a	1b	2	3	4	5	6	7	8	10	11	12	13	14
CONDITION				C	C				C	C				

   c. Turn off the pumpout compressor.
3. Remove any remaining refrigerant.
   a. Turn on the chiller water pumps using the PUMPDOWN LOCKOUT screen, accessed from the CONTROL TEST table. Turn on the pumps manually, if they are not controlled by the PIC II.
   b. Turn on the pumpout condenser water.
   c. Place valves in the following positions:

VALVE	1a	1b	2	3	4	5	6	7	8	10	11	12	13	14
CONDITION			C			C			C	C				

   d. Run the pumpout compressor until the chiller pressure reaches 30 psig (207 kPa) for HFC-134a. Then, shut off the pumpout compressor. Warm condenser water will boil off any entrapped liquid refrigerant and the chiller pressure will rise.
   e. When the pressure rises to 40 psig (276 kPa) for HFC-134a, turn on the pumpout compressor until the pressure again reaches 30 psig (207 kPa), and then turn off the pumpout compressor. Repeat this process until the pressure no longer rises. Then, turn on the pumpout compressor and pump until the pressure reaches 18 in. Hg. (40 kPa absolute).
   f. Close valves 1a, 1b, 3, 4, 6, 7, and 10.

VALVE	1a	1b	2	3	4	5	6	7	8	10	11	12	13	14
CONDITION	C	C	C	C	C	C	C	C	C	C				

   g. Turn off the pumpout condenser water and continue to use the PIC II PUMPDOWN LOCKOUT screen functions, which lock out the chiller compressor for operation.
4. Establish a vacuum for service.

   To conserve refrigerant, operate the pumpout compressor until the chiller pressure is reduced to 18 in. Hg vac., ref 30 in. bar. (40 kPa abs.) following Step 3e.

Chillers with Isolation Valves

TRANSFER ALL REFRIGERANT TO CHILLER CONDENSER VESSEL — For chillers with isolation valves, refrigerant can be stored in one chiller vessel or the other without the need for an external storage tank.

1. Push refrigerant into the chiller condenser.
   a. Valve positions:

VALVE	1a	1b	2	3	4	5	8	11	12	13	14
CONDITION				C	C		C		C	C	C

   b. Using the PIC II controls, turn off the chiller water pumps and pumpout condenser water. If the chiller water pumps are not controlled through the PIC II, turn them off manually.
   c. Turn on the pumpout compressor to push the liquid refrigerant out of the chiller cooler vessel.
   d. When all liquid refrigerant has been pushed into the chiller condenser vessel, close chiller isolation valve 11.
   e. Access the PUMPDOWN LOCKOUT screen on the PIC II CONTROL TEST table to turn on the chiller water pumps. If the chiller water pumps are not controlled by the PIC II, turn them on manually.
   f. Turn off the pumpout compressor.
2. Evacuate the refrigerant gas from chiller cooler vessel.
   a. Close pumpout compressor valves 2 and 5, and open valves 3 and 4.

VALVE	1a	1b	2	3	4	5	8	11	12	13	14
CONDITION			C			C	C	C	C	C	C

   b. Turn on the pumpout condenser water.
   c. Run the pumpout compressor until the chiller cooler vessel pressure reaches 18 in. Hg vac (40 kPa abs.). Monitor pressures on the CVC and on refrigerant gages.
   d. Close valve 1a.
   e. Turn off the pumpout compressor.
   f. Close valves 1b, 3, and 4.

VALVE	1a	1b	2	3	4	5	8	11	12	13	14
CONDITION	C	C	C	C	C	C	C	C	C	C	C

   g. Turn off the pumpout condenser water.
   h. Proceed to the PUMPDOWN/LOCKOUT function accessed from the CONTROL TEST table to turn off the chiller water pumps and lock out the chiller compressor. Turn off the chiller water pumps manually if they are not controlled by the PIC II.

TRANSFER ALL REFRIGERANT TO CHILLER COOLER VESSEL

1. Push the refrigerant into the chiller cooler vessel.
   a. Valve positions:

VALVE	1a	1b	2	3	4	5	8	11	12	13	14
CONDITION			C			C	C		C	C	C

   b. Turn off the chiller water pumps (either through the PIC II controls or manually, if necessary) and the pumpout condenser water.
   c. Turn on the pumpout compressor to push the refrigerant out of the chiller condenser.
   d. When all liquid refrigerant is out of the chiller condenser, close the cooler isolation valve 11.
   e. Turn off the pumpout compressor.
2. Evacuate the refrigerant gas from the chiller condenser vessel.
   a. Access the PUMPDOWN LOCKOUT function accessed from the CVC CONTROL TEST table to turn on the chiller water pumps. Turn the chiller water pumps on manually if they are not controlled by the PIC II.
   b. Close pumpout unit valves 3 and 4; open valves 2 and 5.

VALVE	1a	1b	2	3	4	5	8	11	12	13	14
CONDITION				C	C		C	C	C	C	C

   c. Turn on the pumpout condenser water.
   d. Run the pumpout compressor until the chiller condenser pressure reaches 18 in. Hg vac (40 kPa abs.). Monitor pressure at the CVC and at refrigerant gages.
   e. Close valve 1b.
   f. Turn off the pumpout compressor.
   g. Close valves 1a, 2, and 5.

VALVE	1a	1b	2	3	4	5	8	11	12	13	14
CONDITION	C	C	C	C	C	C	C	C	C	C	C

   h. Turn off the pumpout condenser water.
   i. Proceed to the PUMPDOWN LOCKOUT test from the CVC CONTROL TEST table to turn off the chiller water pumps and lock out the chiller compressor. Turn off the chiller water pumps manually if they are not controlled by the PIC II.

RETURN CHILLER TO NORMAL OPERATING CONDITIONS

1. Ensure vessel that was opened has been evacuated.
2. Access the TERMINATE LOCKOUT function CVC from the CONTROL TEST table to view vessel pressures and turn on chiller water pumps. If the chiller water pumps are not controlled by the PIC II, turn them on manually.
3. Open valves 1a, 1b, and 3.

VALVE	1a	1b	2	3	4	5	8	11	12	13	14
CONDITION			C		C	C	C	C	C	C	C

4. Slowly open valve 5, gradually increasing pressure in the evacuated vessel to 35 psig (141 kPa). Feed refrigerant slowly to prevent tube freeze up.
5. Leak test to ensure vessel integrity.
6. Open valve 5 fully.

VALVE	1a	1b	2	3	4	5	8	11	12	13	14
CONDITION			C		C		C	C	C	C	C

7. Open valve 11 to equalize the liquid refrigerant level between the vessels.
8. Close valves 1a, 1b, 3, and 5.
9. Open isolation valves 12, 13, and 14 (if present).

VALVE	1a	1b	2	3	4	5	8	11	12	13	14
CONDITION	C	C	C	C	C	C	C				

10. Proceed to the TERMINATE LOCKOUT screen (accessed from the CONTROL TEST table) to turn off the water pumps and enable the chiller compressor for start-up. If the chiller water pumps are not controlled by the PIC II, turn them off manually.

GENERAL MAINTENANCE

Refrigerant Properties — The standard refrigerant for the 19XR chiller is HFC-134a. At normal atmospheric pressure, HFC-134a will boil at –14 F (–25 C) and must, therefore, be kept in pressurized containers or storage tanks. The refrigerant is practically odorless when mixed with air and is noncombustible at atmospheric pressure. Read the Material Safety Data Sheet and the latest ASHRAE Safety Guide for Mechanical Refrigeration to learn more about safe handling of this refrigerant.

⚠ DANGER

HFC-134a will dissolve oil and some nonmetallic materials, dry the skin, and, in heavy concentrations, may displace enough oxygen to cause asphyxiation. When handling this refrigerant, protect the hands and eyes and avoid breathing fumes.

Adding Refrigerant — Follow the procedures described in Trim Refrigerant Charge section, this page.

⚠ WARNING

Always use the compressor pumpdown function in the Control Test table to turn on the cooler pump and lock out the compressor when transferring refrigerant. Liquid refrigerant may flash into a gas and cause possible freeze-up when the chiller pressure is below 30 psig (207 kPa) for HFC-134a.

Removing Refrigerant — If the optional pumpout system is used, the 19XR refrigerant charge may be transferred to a pumpout storage tank or to the chiller condenser or cooler vessels. Follow the procedures in the Pumpout and Refrigerant Transfer Procedures section when transferring refrigerant from one vessel to another.

Adjusting the Refrigerant Charge — If the addition or removal of refrigerant is required to improve chiller performance, follow the procedures given under the Trim Refrigerant Charge section, this page.

Refrigerant Leak Testing — Because HFC-134a is above atmospheric pressure at room temperature, leak testing can be performed with refrigerant in the chiller. Use an electronic halide leak detector, soap bubble solution, or ultrasonic leak detector. Ensure that the room is well ventilated and free from concentration of refrigerant to keep false readings to a minimum. Before making any necessary repairs to a leak, transfer all refrigerant from the leaking vessel.

Leak Rate — It is recommended byASHRAE that chillers be taken off line immediately and repaired if the refrigerant leak rate for the entire chiller is more than 10% of the operating refrigerant charge per year.

In addition, Carrier recommends that leaks totalling less than the above rate but more than a rate of 0.1% of the total charge per year should be repaired during annual maintenance or whenever the refrigerant is transferred for other service work.

Test After Service, Repair, or Major Leak — If all the refrigerant has been lost or if the chiller has been opened for service, the chiller or the affected vessels must be pressure tested and leak tested. Refer to the Leak Test Chiller section to perform a leak test.

⚠ WARNING

HFC-134a should not be mixed with air or oxygen and pressurized for leak testing. In general, this refrigerant should not be present with high concentrations of air or oxygen above atmospheric pressures, because the mixture can undergo combustion.

REFRIGERANT TRACER — Use an environmentally acceptable refrigerant as a tracer for leak test procedures.

TO PRESSURIZE WITH DRY NITROGEN — Another method of leak testing is to pressurize with nitrogen only and to use a soap bubble solution or an ultrasonic leak detector to determine if leaks are present.

NOTE: Pressurizing with dry nitrogen for leak testing should only be done if *all* refrigerant has been evacuated from the vessel.

1. Connect a copper tube from the pressure regulator on the cylinder to the refrigerant charging valve. Never apply full cylinder pressure to the pressurizing line. Follow the listed sequence.
2. Open the charging valve fully.
3. Slowly open the cylinder regulating valve.
4. Observe the pressure gage on the chiller and close the regulating valve when the pressure reaches test level. *Do not exceed* 140 psig (965 kPa).
5. Close the charging valve on the chiller. Remove the copper tube if it is no longer required.

Repair the Leak, Retest, and Apply Standing Vacuum Test — After pressurizing the chiller, test for leaks with an electronic halide leak detector, soap bubble solution, or an ultrasonic leak detector. Bring the chiller back to atmospheric pressure, repair any leaks found, and retest.

After retesting and finding no leaks, apply a standing vacuum test. Then dehydrate the chiller. Refer to the Standing Vacuum Test and Chiller Dehydration section (pages 48 and 51) in the Before Initial Start-Up section.

Checking Guide Vane Linkage — When the chiller is off, the guide vanes are closed and the actuator mechanism is in the position shown in Fig. 33. If slack develops in the drive chain, do the following to eliminate backlash:

1. With the chiller shut down and the actuator fully closed, remove the chain guard and loosen the actuator bracket holddown bolts.
2. Loosen guide vane sprocket adjusting bolts.
3. Pry bracket upwards to remove slack, then retighten the bracket holddown bolts.
4. Retighten the guide vane sprocket adjusting bolts. Ensure that the guide vane shaft is rotated fully in the clockwise direction in order close it fully.

Trim Refrigerant Charge — If, to obtain optimal chiller performance, it becomes necessary to adjust the refrigerant charge, operate the chiller at design load and then add or remove refrigerant slowly until the difference between the leaving chilled water temperature and the cooler refrigerant temperature reaches design conditions or becomes a minimum. *Do not overcharge.*

Refrigerant may be added either through the storage tank or directly into the chiller as described in the Charge Refrigerant into Chiller section.

To remove any excess refrigerant, follow the procedure in Transfer Refrigerant from Chiller to Pumpout Storage Tank section, Steps 1a and b, page 63.

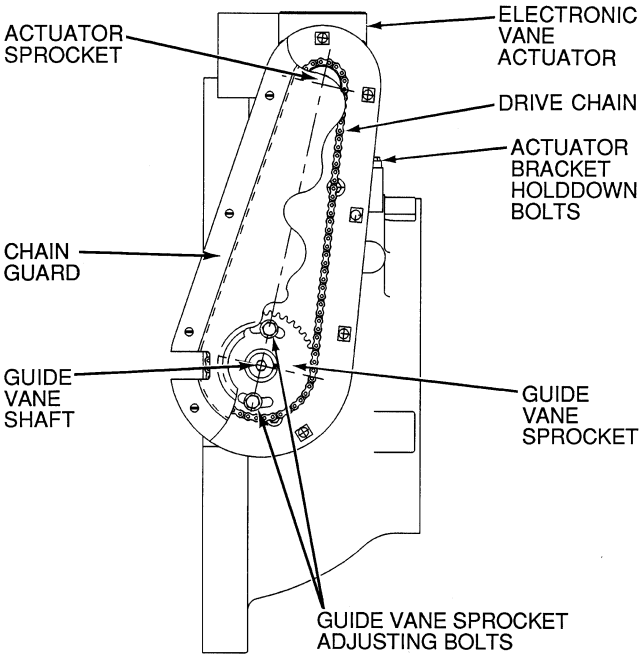

Fig. 33 — Guide Vane Actuator Linkage

WEEKLY MAINTENANCE

Check the Lubrication System — Mark the oil level on the reservoir sight glass, and observe the level each week while the chiller is shut down.

If the level goes below the lower sight glass, check the oil reclaim system for proper operation. If additional oil is required, add it through the oil drain charging valve (Fig. 2). A pump is required when adding oil against refrigerant pressure. The oil charge for the 19XR compressor depends on the compressor Frame size:

- Frame 2 compressor — 5 gal (18.9 L)
- Frame 3 compressor — 8 gal (30 L)
- Frame 4 compressor — 10 gal (37.8 L)
- Frame 5 compressor — 18 gal (67.8 L)

The added oil *must* meet Carrier specifications for the 19XR. Refer to Changing Oil Filter and Oil Changes section on this page. Any additional oil that is added should be logged by noting the amount and date. Any oil that is added due to oil loss that is not related to service will eventually return to the sump. It must be removed when the level is high.

An oil heater is controlled by the PIC II to maintain oil temperature (see the Controls section) when the compressor is off. The CVC COMPRESS screen displays whether the heater is energized or not. The heater is energized if the *OIL HEATER RELAY* parameter reads ON. If the PIC II shows that the heater is energized and if the sump is still not heating up, the power to the oil heater may be off or the oil level may be too low. Check the oil level, the oil heater contactor voltage, and oil heater resistance.

The PIC II does not permit compressor start-up if the oil temperature is too low. The PIC II continues with start-up only after the temperature is within allowable limits.

SCHEDULED MAINTENANCE

Establish a regular maintenance schedule based on your actual chiller requirements such as chiller load, run hours, and water quality. *The time intervals listed in this section are offered as guides to service only*.

Service Ontime — The CVC will display a *SERVICE ONTIME* value on the MAINSTAT screen. This value should be reset to zero by the service person or the operator each time major service work is completed so that the time between service can be viewed and tracked.

Inspect the Control Panel — Maintenance consists of general cleaning and tightening of connections. Vacuum the cabinet to eliminate dust build-up. If the chiller control malfunctions, refer to the Troubleshooting Guide section for control checks and adjustments.

⚠ CAUTION

Ensure power to the control center is off when cleaning and tightening connections inside the control panel.

Check Safety and Operating Controls Monthly — To ensure chiller protection, the automated Control Test should be performed at least once per month. See Table 3 for safety control settings. See Table 6 for Control Test functions.

Changing Oil Filter — Change the oil filter on a yearly basis or when the chiller is opened for repairs. The 19XR has an isolatable oil filter so that the filter may be changed with the refrigerant remaining in the chiller. Use the following procedure:

1. Ensure the compressor is off and the disconnect for the compressor is open.
2. Disconnect the power to the oil pump.
3. Close the oil filter isolation valves located behind power panel on top of oil pump assembly.
4. Connect an oil charging hose from the oil charging valve (Fig. 2) and place the other end in a clean container suitable for used oil. The oil drained from the filter housing should be used as an oil sample and sent to a laboratory for proper analysis. *Do not contaminate this sample*.
5. Slowly open the charging valve to drain the oil from the housing.

⚠ CAUTION

The oil filter housing is at a high pressure. Relieve this pressure slowly.

6. Once all oil has been drained, place some rags or absorbent material under the oil filter housing to catch any drips once the filter is opened. Remove the 4 bolts from the end of the filter housing and remove the filter cover.
7. Remove the filter retainer by unscrewing the retainer nut. The filter may now be removed and disposed of properly.
8. Replace the old filter with a new filter. Install the filter retainer and tighten down the retainer nut. Install the filter cover and tighten the 4 bolts.
9. Evacuate the filter housing by placing a vacuum pump on the charging valve. Follow the normal evacuation procedures. Shut the charging valve when done and reconnect the valve so that new oil can be pumped into the filter housing. Fill with the same amount that was removed; then close the charging valve.
10. Remove the hose from the charging valve, open the isolation valves to the filter housing, and turn on the power to the pump and the motor.

Oil Specification — If oil is added, it must meet the following Carrier specifications:

Oil Type for units using R-134a . . . . . Inhibited polyolester-based synthetic compressor oil formatted for use with HFC, gear-driven, hermetic compressors.

ISO Viscosity Grade 68

The polyolester-based oil (P/N: PP23BZ103) may be ordered from your local Carrier representative.

Oil Changes — Carrier recommends changing the oil after the first year of operation and every five years thereafter as a minimum in addition to a yearly oil analysis. However, if a continuous oil monitoring system is functioning and a yearly oil analysis is performed, the time between oil changes can be extended.

TO CHANGE THE OIL

1. Transfer the refrigerant into the chiller condenser vessel (for isolatable vessels) or to a pumpout storage tank.
2. Mark the existing oil level.
3. Open the control and oil heater circuit breaker.
4. When the chiller pressure is 5 psig (34 kPa) or less, drain the oil reservoir by opening the oil charging valve (Fig. 2). Slowly open the valve against refrigerant pressure.
5. Change the oil filter at this time. See Changing Oil Filter section.
6. Change the refrigerant filter at this time, see the next section, Refrigerant Filter.
7. Charge the chiller with oil. Charge until the oil level is equal to the oil level marked in Step 2. Turn on the power to the oil heater and let the PIC II warm it up to at least 140 F (60 C). Operate the oil pump manually, using the Control Test function, for 2 minutes. For shutdown conditions, the oil level should be full in the lower sight glass. If the oil level is above ½ full in the upper sight glass, remove the excess oil. The oil level should now be equal to the amount shown in Step 2.

Refrigerant Filter — A refrigerant filter/drier, located on the refrigerant cooling line to the motor, should be changed once a year or more often if filter condition indicates a need for more frequent replacement. Change the filter by closing the filter isolation valves (Fig. 4) and slowly opening the flare fittings with a wrench and back-up wrench to relieve the pressure. A moisture indicator sight glass is located beyond this filter to indicate the volume and moisture in the refrigerant. If the moisture indicator indicates moisture, locate the source of water immediately by performing a thorough leak check.

Oil Reclaim Filter — The oil reclaim system has a strainer on the eductor suction line, a strainer on the discharge pressure line, and a filter on the cooler scavenging line. Replace the filter once per year or more often if filter condition indicates a need for more frequent replacement. Change the filter by closing the filter isolation valves and slowly opening the flare fitting with a wrench and back-up wrench to relieve the pressure. Change the strainers once every 5 years or whenever refrigerant is evacuated from the cooler.

Inspect Refrigerant Float System — Perform this inspection every 5 years or when the condenser is opened for service.

1. Transfer the refrigerant into the cooler vessel or into a pumpout storage tank.
2. Remove the float access cover.
3. Clean the chamber and valve assembly thoroughly. Be sure the valve moves freely. Ensure that all openings are free of obstructions.
4. Examine the cover gasket and replace if necessary.

See Fig. 34 for a view of the float valve design. For linear float valve designs, inspect the orientation of the float slide pin. It must be pointed toward the bubbler tube for proper operation.

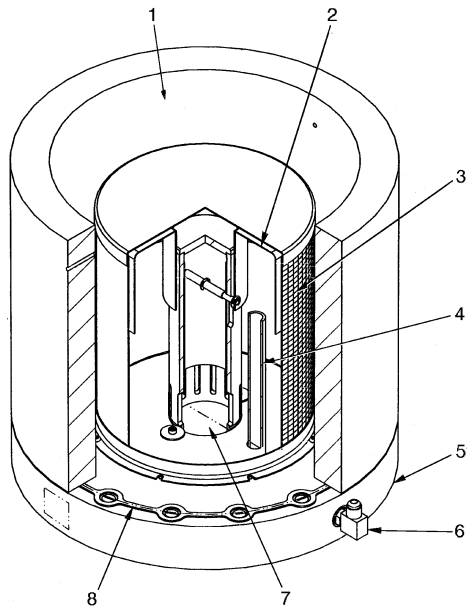

LEGEND

1 — Refrigerant Inlet from FLASC Chamber
2 — Linear Float Assembly
3 — Float Screen
4 — Bubble Line
5 — Float Cover
6 — Bubble Line Connection
7 — Refrigerant Outlet to Cooler
8 — Gasket

Fig. 34 — 19XR Float Valve Design

Inspect Relief Valves and Piping — The relief valves on this chiller protect the system against the potentially dangerous effects of overpressure. To ensure against damage to the equipment and possible injury to personnel, these devices must be kept in peak operating condition.

As a minimum, the following maintenance is required.

1. At least once a year, disconnect the vent piping at the valve outlet and carefully inspect the valve body and mechanism for any evidence of internal corrosion or rust, dirt, scale, leakage, etc.
2. If corrosion or foreign material is found, do not attempt to repair or recondition. *Replace the valve.*
3. If the chiller is installed in a corrosive atmosphere or the relief valves are vented into a corrosive atmosphere, inspect the relief valves at more frequent intervals.

Compressor Bearing and Gear Maintenance — The key to good bearing and gear maintenance is proper lubrication. Use the proper grade of oil, maintained at recommended level, temperature, and pressure. Inspect the lubrication system regularly and thoroughly.

To inspect the bearings, a complete compressor teardown is required. Only a trained service technician should remove and examine the bearings. The cover plate on older compressor bases was used for factory-test purposes and is not usable for bearing or gear inspection. The bearings and gears should be examined on a scheduled basis for signs of wear. The frequency of examination is determined by the hours of

chiller operation, load conditions during operation, and the condition of the oil and the lubrication system. Excessive bearing wear can sometimes be detected through increased vibration or increased bearing temperature. If either symptom appears, contact an experienced and responsible service organization for assistance.

Inspect the Heat Exchanger Tubes and Flow Devices

COOLER AND FLOW DEVICES — Inspect and clean the cooler tubes at the end of the first operating season. Because these tubes have internal ridges, a rotary-type tube cleaning system is needed to fully clean the tubes. Inspect the tubes' condition to determine the scheduled frequency for future cleaning and to determine whether water treatment in the chilled water/brine circuit is adequate. Inspect the entering and leaving chilled water temperature sensors and flow devices for signs of corrosion or scale. Replace a sensor or Schrader fitting if corroded or remove any scale if found.

CONDENSER AND FLOW DEVICES — Since this water circuit is usually an open-type system, the tubes may be subject to contamination and scale. Clean the condenser tubes with a rotary tube cleaning system at least once per year and more often if the water is contaminated. Inspect the entering and leaving condenser water sensors and flow devices for signs of corrosion or scale. Replace the sensor or Schrader fitting if corroded or remove any scale if found.

Higher than normal condenser pressures, together with the inability to reach full refrigeration load, usually indicate dirty tubes or air in the chiller. If the refrigeration log indicates a rise above normal condenser pressures, check the condenser refrigerant temperature against the leaving condenser water temperature. If this reading is more than what the design difference is supposed to be, the condenser tubes may be dirty or water flow may be incorrect. Because HFC-134a is a high-pressure refrigerant, air usually does not enter the chiller.

During the tube cleaning process, use brushes specially designed to avoid scraping and scratching the tube wall. Contact your Carrier representative to obtain these brushes. *Do not* use wire brushes.

⚠ CAUTION

Hard scale may require chemical treatment for its prevention or removal. Consult a water treatment specialist for proper treatment.

Water Leaks — The refrigerant moisture indicator on the refrigerant motor cooling line (Fig. 2) indicates whether there is water leakage during chiller operation. Water leaks should be repaired immediately.

⚠ CAUTION

The chiller must be dehydrated after repair of water leaks. See Chiller Dehydration section, page 51.

Water Treatment — Untreated or improperly treated water may result in corrosion, scaling, erosion, or algae. The services of a qualified water treatment specialist should be obtained to develop and monitor a treatment program.

⚠ CAUTION

Water must be within design flow limits, clean, and treated to ensure proper chiller performance and reduce the potential of tube damage due to corrosion, scaling, erosion, and algae. Carrier assumes no responsibility for chiller damage resulting from untreated or improperly treated water.

Inspect the Starting Equipment — Before working on any starter, shut off the chiller and open all disconnects supplying power to the starter.

⚠ WARNING

The disconnect on the starter front panel does not de-energize all internal circuits. Open all internal and remote disconnects before servicing the starter.

⚠ WARNING

Never open isolating knife switches while equipment is operating. Electrical arcing can cause serious injury.

Inspect starter contact surfaces for wear or pitting on mechanical-type starters. Do not sandpaper or file silverplated contacts. Follow the starter manufacturer's instructions for contact replacement, lubrication, spare parts ordering, and other maintenance requirements.

Periodically vacuum or blow off accumulated debris on the internal parts with a high-velocity, low-pressure blower.

Power connections on newly installed starters may relax and loosen after a month of operation. Turn power off and retighten. Recheck annually thereafter.

⚠ CAUTION

Loose power connections can cause voltage spikes, overheating, malfunctioning, or failures.

Check Pressure Transducers — Once a year, the pressure transducers should be checked against a pressure gage reading. Check all eight transducers: the 2 oil differential pressure transducers, the condenser pressure transducer, the cooler pressure transducer, and the waterside pressure transducers (consisting of 4 flow devices: 2 cooler, 2 condenser).

Note the evaporator and condenser pressure readings on the HEAT_EX screen on the CVC (*EVAPORATOR PRESSURE* and *CONDENSER PRESSURE*). Attach an accurate set of refrigeration gages to the cooler and condenser Schrader fittings. Compare the two readings. If there is a difference in readings, the transducer can be calibrated as described in the Troubleshooting Guide section. Oil differential pressure (*OIL PUMP DELTA P* on the COMPRESS screen) should be zero whenever the compressor is off.

Optional Pumpout System Maintenance — For pumpout unit compressor maintenance details, refer to the 06D, 07D Installation, Start-Up, and Service Instructions.

OPTIONAL PUMPOUT COMPRESSOR OIL CHARGE — Use oil conforming to Carrier specifications for reciprocating compressor usage. Oil requirements are as follows:

ISO Viscosity 68

Carrier Part Number PP23BZ103

The total oil charge, 4.5 pints (2.6 L), consists of 3.5 pints (2.0 L) for the compressor and one additional pint (0.6 L) for the oil separator.

Oil should be visible in one of the compressor sight glasses during both operation and at shutdown. Always check the oil level before operating the compressor. Before adding or changing oil, relieve the refrigerant pressure as follows:

1. Attach a pressure gage to the gage port of either compressor service valve (Fig. 33).

2. Close the suction service valve and open the discharge line to the storage tank or the chiller.
3. Operate the compressor until the crankcase pressure drops to 2 psig (13 kPa).
4. Stop the compressor and isolate the system by closing the discharge service valve.
5. Slowly remove the oil return line connection (Fig. 32). Add oil as required.
6. Replace the connection and reopen the compressor service valves.

OPTIONAL PUMPOUT SAFETY CONTROL SETTINGS (Fig. 35) — The optional pumpout system high-pressure switch opens at 161 psig (1110 kPa) and closes at 130 psig (896 kPa). Check the switch setting by operating the pumpout compressor and slowly throttling the pumpout condenser water.

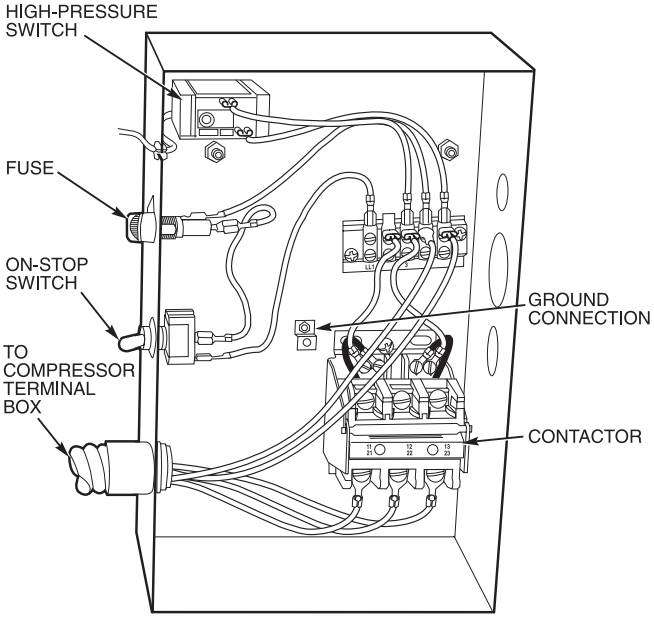

Fig. 35 — Optional Pumpout System Controls

Ordering Replacement Chiller Parts — When ordering Carrier specified parts, the following information must accompany an order:

- chiller model number and serial number
- name, quantity, and part number of the part required
- delivery address and method of shipment.

TROUBLESHOOTING GUIDE

Overview — The PIC II has many features to help the operator and technician troubleshoot a 19XR chiller.

- The CVC shows the chiller's actual operating conditions and can be viewed while the unit is running.
- The CVC default screen freezes when an alarm occurs. The freeze enables the operator to view the chiller conditions at the time of alarm. The STATUS screens continue to show current information. Once all alarms have been cleared (by correcting the problems and pressing the RESET softkey), the CVC default screen returns to normal operation.
- The CONTROL ALGORITHM STATUS screens (which include the CAPACITY, OVERRIDE, LL_MAINT, ISM_HIST, LOADSHED, WSMDEFME, and OCCDEFCM screens) display information that helps to diagnose problems with chilled water temperature control, chilled water temperature control overrides, hot gas bypass, surge algorithm status, and time schedule operation.
- The control test feature facilitates the proper operation and test of temperature sensors, pressure transducers, the guide vane actuator, oil pump, water pumps, tower control, and other on/off outputs while the compressor is stopped. It also has the ability to lock off the compressor and turn on water pumps for pumpout operation. The CVC shows the temperatures and pressures required during these operations.
- From other SERVICE tables, the operator/technician can access configured items, such as chilled water resets, override set points, etc.
- If an operating fault is detected, an alarm message is generated and displayed on the CVC default screen. A more detailed message — along with a diagnostic message — is also stored into the ALARM HISTORY table.

Checking Display Messages — The first area to check when troubleshooting the 19XR is the CVC display. If the alarm light is flashing, check the primary and secondary message lines on the CVC default screen (Fig. 12). These messages will indicate where the fault is occurring. These messages contain the alarm message with a specified code. This code or state appears with each alarm and alert message. The ALARM HISTORY table on the CVC SERVICE menu also contains an alarm message to further expand on the alarm. For a complete list of possible alarm messages, see Table 8. If the alarm light starts to flash while accessing a menu screen, press the EXIT softkey to return to the default screen to read the alarm message. The STATUS screen can also be accessed to determine where an alarm exists.

Checking Temperature Sensors — All temperature sensors are thermistor-type sensors. This means that the resistance of the sensor varies with temperature. All sensors have the same resistance characteristics. If the controls are on, determine sensor temperature by measuring voltage drop; if the controls are powered off, determine sensor temperature by measuring resistance. Compare the readings to the values listed in Table 9A or 9B.

RESISTANCE CHECK — Turn off the control power and, from the module, disconnect the terminal plug of the sensor in question. With a digital ohmmeter, measure sensor resistance between receptacles as designated by the wiring diagram. The resistance and corresponding temperature are listed in Table 9A or 9B. Check the resistance of both wires to ground. This resistance should be infinite.

VOLTAGE DROP — The voltage drop across any energized sensor can be measured with a digital voltmeter while the control is energized. Table 9A or 9B lists the relationship between temperature and sensor voltage drop (volts dc measured across the energized sensor). Exercise care when measuring voltage to prevent damage to the sensor leads, connector plugs, and modules. Sensors should also be checked at the sensor plugs. Check the sensor wire at the sensor for 5 vdc if the control is powered on.

⚠ CAUTION

Relieve all refrigerant pressure or drain the water before replacing the temperature sensors.

CHECK SENSOR ACCURACY — Place the sensor in a medium of known temperature and compare that temperature to the measured reading. The thermometer used to determine the temperature of the medium should be of laboratory quality with 0.5° F (.25° C) graduations. The sensor in question should be accurate to within 2° F (1.2° C).

See Fig. 7 for sensor locations. The sensors are immersed directly in the refrigerant or water circuits. The wiring at each sensor is easily disconnected by unlatching the connector. These connectors allow only one-way connection to the sensor. When installing a new sensor, apply a pipe sealant or thread sealant to the sensor threads.

DUAL TEMPERATURE SENSORS — For servicing convenience, there are 2 sensors each on the bearing and motor temperature sensors. If one of the sensors is damaged, the other can be used by simply moving a wire. The number 2 terminal in the sensor terminal box is the common line. To use the second sensor, move the wire from the number 1 position to the number 3 position.

Checking Pressure Transducers — There are 8 pressure transducers on 19XR chillers. They determine cooler, condenser, oil pressure, and cooler and condenser flow. The cooler and condenser transducers are also used by the PIC II to determine the refrigerant temperatures. The oil supply pressure transducer value and the oil transmission sump pressure transducer value difference is calculated by the CCM. The CCM module then displays the differential pressure. In effect, the CCM reads only one input for oil pressure for a total of 5 pressure inputs: cooler pressure, condenser pressure, oil differential pressure, cooler waterside differential pressure, and condenser waterside differential pressure. See the Check Pressure Transducers section (page 68) under Scheduled Maintenance.

These 5 pressure transducers can be calibrated if necessary. It is not usually necessary to calibrate at initial start-up. However, at high altitude locations, it is necessary to calibrate the transducers to ensure the proper refrigerant temperature/pressure relationship. Each transducer is supplied with 5 vdc power from the CCM. If the power supply fails, a transducer voltage reference alarm occurs. If the transducer reading is suspected of being faulty, check the supply voltage. It should be 5 vdc ± .5 v displayed in CONTROL TEST under CCM Pressure Transducers. If the supply voltage is correct, the transducer should be recalibrated or replaced.

COOLER CONDENSER PRESSURE TRANSDUCER AND WATERSIDE FLOW DEVICE CALIBRATION — Calibration can be checked by comparing the pressure readings from the transducer to an accurate refrigeration gage reading. These readings can be viewed or calibrated from the HEAT_EX screen on the CVC. The transducer can be checked and calibrated at 2 pressure points. These calibration points are 0 psig (0 kPa) and between 25 and 250 psig (173 and 1724 kPa). To calibrate these transducers:

1. Shut down the compressor, cooler, and condenser pumps.

   NOTE: There should be no flow through the heat exchangers.

2. Disconnect the transducer in question from its Schrader fitting for cooler or condenser transducer calibration. For oil pressure or flow device calibration keep transducer in place.

   NOTE: If the cooler or condenser vessels are at 0 psig (0 kPa) or are open to atmospheric pressure, the transducers can be calibrated for zero without removing the transducer from the vessel.

3. Access the HEAT_EX screen and view the particular transducer reading (the *EVAPORATOR PRESSURE* or *CONDENSER PRESSURE* parameter on the HEAT_EX screen). To calibrate oil pressure or waterside flow device, view the particular reading *(CHILLED WATER DELTA P* and *CONDENSER WATER DELTA P* on the HEAT_EX screen, and *OIL PUMP DELTA P* on the COMPRESS screen). It should read 0 psi (0 kPa). If the reading is not 0 psi (0 kPa), but within ± 5 psi (35 kPa), the value may be set to zero by pressing the SELECT softkey while the appropriate transducer parameter is highlighted on the CVC screen. Then press the ENTER softkey. The value will now go to zero. No high end calibration is necessary for *OIL PUMP DELTA P* or flow devices.

   If the transducer value is not within the calibration range, the transducer returns to the original reading. If the pressure is within the allowed range (noted above), check the voltage ratio of the transducer. To obtain the voltage ratio, divide the voltage (dc) input from the transducer by the supply voltage signal (displayed in *CONTROL TEST* menu in the CCM PRESSURE TRANSDUCERS screen) or measure across the positive (+ red) and negative (− black) leads of the transducer. For example, the condenser transducer voltage input is measured at CCM terminals J2-4 and J2-5. The voltage ratio must be between 0.80 and 0.11 for the software to allow calibration. Pressurize the transducer until the ratio is within range. Then attempt calibration again.

4. A high pressure point can also be calibrated between 25 and 250 psig (172.4 and 1723.7 kPa) by attaching a regulated 250 psig (1724 kPa) pressure (usually from a nitrogen cylinder). The high pressure point can be calibrated by accessing the appropriate transducer parameter on the HEAT_EX screen, highlighting the parameter, pressing the SELECT softkey, and then using the INCREASE or DECREASE softkeys to adjust the value to the exact pressure on the refrigerant gage. Press the ENTER softkey to finish the calibration. Pressures at high altitude locations must be compensated for, so the chiller temperature/pressure relationship is correct.

The PIC II does not allow calibration if the transducer is too far out of calibration. In this case, a new transducer must be installed and re-calibrated.

TRANSDUCER REPLACEMENT — Since the transducers are mounted on Schrader-type fittings, there is no need to remove refrigerant from the vessel when replacing the transducers. Disconnect the transducer wiring by pulling up on the locking tab while pulling up on the weather-tight connecting plug from the end of the transducer. *Do not pull on the transducer wires.* Unscrew the transducer from the Schrader fitting. When installing a new transducer, do not use pipe sealer (which can plug the sensor). Put the plug connector back on the sensor and snap into place. Check for refrigerant leaks.

⚠ WARNING

Be sure to use a back-up wrench on the Schrader fitting whenever removing a transducer, since the Schrader fitting may back out with the transducer, causing a large leak and possible injury to personnel.

Control Algorithms Checkout Procedure — One of the tables on the CVC SERVICE menu is CONTROL ALGORITHM STATUS. The maintenance screens may be viewed from the CONTROL ALGORITHM STATUS table to see how a particular control algorithm is operating.

These maintenance screens are very useful in helping to determine how the control temperature is calculated and guide vane positioned and for observing the reactions from load changes, control point overrides, hot gas bypass, surge prevention, etc. The tables are:

CAPACITY	Capacity Control	This table shows all values used to calculate the chilled water/brine control point.
OVERRIDE	Override Status	Details of all chilled water control override values.
HEAT_EX	Surge/ HGBP Status	The surge and hot gas bypass control algorithm status is viewed from this screen. All values dealing with this control are displayed.
LL_MAINT	LEAD/LAG Status	Indicates LEAD/LAG operation status.
OCCDEFCM	Time Schedules Status	The Local and CCN occupied schedules are displayed here to help the operator quickly determine whether the schedule is in the ″occupied″ mode or not.
WSMDEFME	Water System Manager Status	The water system manager is a CCN module that can turn on the chiller and change the chilled water control point. This screen indicates the status of this system.

Control Test — The Control Test feature can check all the thermistor temperature sensors, pressure transducers, pumps and their associated flow devices, the guide vane actuator, and other control outputs such as hot gas bypass. The tests can help to determine whether a switch is defective or a pump relay is not operating, as well as other useful troubleshooting issues. During pumpdown operations, the pumps are energized to prevent freeze-up and the vessel pressures and temperatures are displayed. The Pumpdown/Lockout feature prevents compressor start-up when there is no refrigerant in the chiller or if the vessels are isolated. The Terminate Lockout feature ends the Pumpdown/Lockout after the pumpdown procedure is reversed and refrigerant is added.

LEGEND TO TABLES 8A - 8J

CCM — Chiller Control Module
CVC — Chiller Visual Control
CHW — Chilled Water
ISM — Integrated Starter Module
PIC II — Product Integrated Control II
VFD — Variable Frequency Drive

Table 8 — CVC Primary and Secondary Messages and Custom Alarm/Alert Messages with Troubleshooting Guides

A. MANUAL STOP

PRIMARY MESSAGE	SECONDARY MESSAGE	PROBABLE CAUSE/REMEDY
MANUALLY STOPPED — PRESS	CCN OR LOCAL TO START	PIC II in OFF mode, press CCN or LOCAL softkey to start unit.
TERMINATE PUMPDOWN MODE	TO SELECT CCN OR LOCAL	Enter the CONTROL TEST table and select TERMINATE LOCKOUT to unlock compressor.
SHUTDOWN IN PROGRESS	COMPRESSOR UNLOADING	Chiller unloading before shutdown due to soft/stop feature.
SHUTDOWN IN PROGRESS	COMPRESSOR DEENERGIZED	Chiller compressor is being commanded to stop. Water pumps are deenergized within one minute.
ICE BUILD	OPERATION COMPLETE	Chiller shutdown from Ice Build operation.

B. READY TO START

PRIMARY MESSAGE	SECONDARY MESSAGE	PROBABLE CAUSE/REMEDY
READY TO START IN XX MIN	UNOCCUPIED MODE	Time schedule for PIC II is unoccupied. Chillers will start only when occupied.
READY TO START IN XX MIN	REMOTE CONTACTS OPEN	Remote contacts are open. Close contacts to start.
READY TO START IN XX MIN	STOP COMMAND IN EFFECT	Chiller START/STOP on MAINSTAT manually forced to stop. Release point to start.
READY TO START IN XX MIN	OCCUPIED MODE	Chiller timer counting down. Unit ready to start.
READY TO START IN XX MIN	REMOTE CONTACTS CLOSED	Chiller timer counting down. Unit ready to start. Remote contact enabled and closed.
READY TO START IN XX MIN	START COMMAND IN EFFECT	Chiller START/STOP on MAINSTAT manually forced to start. Release value to start under normal control.
READY TO START IN XX MIN	RECYCLE RESTART PENDING	Chiller in recycle mode.
READY TO START	UNOCCUPIED MODE	Time schedule for PIC II is unoccupied. Chiller will start when occupied. Make sure the time and date are correct. Change values in TIME AND DATE screen.
READY TO START	REMOTE CONTACTS OPEN	Remote contacts have stopped the chiller. Close contacts to start.
READY TO START	STOP COMMAND IN EFFECT	Chiller START/STOP on MAINSTAT manually forced to stop. Release point to start.
READY TO START	OCCUPIED MODE	Chiller timers complete, unit start will commence.
READY TO START	REMOTE CONTACTS CLOSED	Chiller timer counting down. Unit ready for start.
READY TO START	START COMMAND IN EFFECT	Chiller START/STOP on MAINSTAT has been manually forced to start. Chiller will start regardless of time schedule or remote contact status.
STARTUP INHIBITED	LOADSHED IN EFFECT	CCN loadshed module commanding chiller top stop.

Table 8 — CVC Primary and Secondary Messages and Custom Alarm/Alert Messages with Troubleshooting Guides (cont)

C. IN RECYCLE SHUTDOWN

PRIMARY MESSAGE	SECONDARY MESSAGE	PROBABLE CAUSE/REMEDY
RECYCLE RESTART PENDING	OCCUPIED MODE	Unit in recycle mode, chilled water temperature is not sufficiently above set point to start.
RECYCLE RESTART PENDING	REMOTE CONTACT CLOSED	Unit in recycle mode, chilled water temperature is not sufficiently above set point to start.
RECYCLE RESTART PENDING	START COMMAND IN EFFECT	Chiller START/STOP on MAINSTAT manually forced to start, chilled water temperature is not sufficiently above set point to start.
RECYCLE RESTART PENDING	ICE BUILD MODE	Chiller in ICE BUILD mode. Chilled fluid temperature is satisfied for ICE BUILD conditions.

D. PRE-START ALERTS: These alerts only delay start-up. When alert is corrected, the start-up will continue. No reset is necessary.

STATE	PRIMARY MESSAGE	SECONDARY MESSAGE	ALARM MESSAGE PRIMARY CAUSE	ADDITIONAL CAUSE/REMEDY
100	**PRESTART ALERT**	STARTS LIMIT EXCEEDED	100->Excessive compressor starts (8 in 12 hours)	Depress the RESET softkey if additional start is required. Reassess start-up requirements.
101	**PRESTART ALERT**	HIGH BEARING TEMPERATURE	101->Comp Thrust Bearing Temp [VALUE] exceeded limit of [LIMIT]*.	Check oil heater for proper operation. Check for low oil level, partially closed coil supply valves, clogged oil filters, etc. Check the sensor wiring and accuracy. Check configurable range in SETUP1 screen.
102	**PRESTART ALERT**	HIGH MOTOR TEMPERATURE	102->Comp Motor Winding Temp [VALUE] exceeded limit of [LIMIT]*.	Check motor sensors for wiring and accuracy. Check motor cooling line for proper operation, or restrictions. Check for excessive starts within a short time span. Check configurable range in SETUP1 screen.
103	**PRESTART ALERT**	HIGH DISCHARGE TEMP	103->Comp Discharge Temp [VALUE] exceeded limit of [LIMIT]*.	Allow discharge sensor to cool. Check for sensor wiring and accuracy. Check for excessive starts. Check configurable range in SETUP1 screen.
104	**PRESTART ALERT**	LOW REFRIGERANT TEMP	104->Evaporator Refrig Temp [VALUE] exceeded limit of [LIMIT]*.	Check transducer wiring and accuracy. Check for low chilled fluid supply temperatures. Check refrigerant charge.
105	**PRESTART ALERT**	LOW OIL TEMPERATURE	105->Oil Sump Temp [VALUE] exceeded limit of [LIMIT]*.	Check oil heater contactor/relay and power. Check oil level and oil pump operation.
106	**PRESTART ALERT**	HIGH CONDENSER PRESSURE	106->Condenser Pressure [VALUE] exceeded limit of [LIMIT]*.	Check transducer wiring and accuracy. Check for high condenser water temperatures.
107	**PRESTART ALERT**	LOW LINE VOLTAGE	107->Average Line Voltage [VALUE] exceeded limit of [LIMIT]*.	Check voltage supply. Check voltage transformers. Consult power utility if voltage is low.
108	**PRESTART ALERT**	HIGH LINE VOLTAGE	108->Average Line Voltage [VALUE] exceeded limit of [LIMIT]*.	Check voltage supply. Check power transformers. Consult power utility if voltage is high.
109	**PRESTART ALERT**	GUIDE VANE CALIBRATION	109->Actual Guide Vane Pos Calibration Required Before Start-Up	Calibrate guide vane actuator in Control Test.

*[LIMIT] is shown on the CVC as temperature, pressure, voltage, etc., predefined or selected by the operator as an override or an alert. [VALUE] is the actual pressure, temperature, voltage, etc., at which the control tripped.

E. START-UP IN PROGRESS

PRIMARY MESSAGE	SECONDARY MESSAGE	CAUSE/REMEDY
STARTUP IN PROGRESS	OCCUPIED MODE	Chiller is starting. Time schedule is occupied.
STARTUP IN PROGRESS	REMOTE CONTACT CLOSED	Chiller is starting. Remote contacts are enabled and closed.
STARTUP IN PROGRESS	START COMMAND IN EFFECT	Chiller is starting. Chiller START/STOP in MAINSTAT manually forced to start.
AUTORESTART IN PROGRESS	OCCUPIED MODE	Chiller is starting after power failure. Time schedule is occupied.
AUTORESTART IN PROGRESS	REMOTE CONTACT CLOSED	Chiller is starting after power failure. Remote contacts are enabled and closed.
AUTORESTART IN PROGRESS	START COMMAND IN EFFECT	Chiller is starting after power failure. Chiller START/STOP on MAINSTAT manually forced to start.

Table 8 — CVC Primary and Secondary Messages and Custom Alarm/Alert Messages with Troubleshooting Guides (cont)

F. NORMAL RUN

PRIMARY MESSAGE	SECONDARY MESSAGE	CAUSE/REMEDY
RUNNING — RESET ACTIVE	4-20 mA SIGNAL	Auto chilled water reset active based on external input.
RUNNING — RESET ACTIVE	REMOTE TEMP SENSOR	Auto chilled water reset active based on external input.
RUNNING — RESET ACTIVE	CHW TEMP DIFFERENCE	Auto chilled water reset active based on cooler ΔT.
RUNNING — TEMP CONTROL	LEAVING CHILLED WATER	Default method of temperature control.
RUNNING — TEMP CONTROL	ENTERING CHILLED WATER	Entering Chilled Water (ECW) control enabled in TEMP_CTL screen.
RUNNING — TEMP CONTROL	TEMPERATURE RAMP LOADING	Ramp Loading in effect. Use RAMP_DEM screen to modify.
RUNNING — DEMAND LIMITED	BY DEMAND RAMP LOADING	Ramp Loading in effect. Use RAMP_DEM screen to modify.
RUNNING — DEMAND LIMITED	BY LOCAL DEMAND SETPOINT	Demand limit set point is less than actual demand.
RUNNING — DEMAND LIMITED	BY 4-20 mA SIGNAL	Demand limit is active based on external auto demand limit option.
RUNNING — DEMAND LIMITED	BY CCN SIGNAL	Demand limit is active based on control limit signal from CCN.
RUNNING — DEMAND LIMITED	BY LOADSHED/REDLINE	Demand limit is active based on LOADSHED screen set-up.
RUNNING — TEMP CONTROL	HOT GAS BYPASS	Hot gas bypass option is energized. See surge prevention in the control section.
RUNNING — DEMAND LIMITED	BY LOCAL SIGNAL	Active demand limit manually overridden on MAINSTAT table.
RUNNING — TEMP CONTROL	ICE BUILD MODE	Chiller is running under Ice Build temperature control.

G. NORMAL RUN WITH OVERRIDES

STATE	PRIMARY MESSAGE	SECONDARY MESSAGE	ALARM MESSAGE PRIMARY CAUSE	ADDITIONAL CAUSE/REMEDY
120	**RUN CAPACITY LIMITED**	HIGH CONDENSER PRESSURE	120->Condenser Pressure [VALUE] exceeded limit of [LIMIT]*.	Check for high condenser water temperatures. Check setting in SETUP1.
121	**RUN CAPACITY LIMITED**	HIGH MOTOR TEMPERATURE	121->Comp Motor Winding Temp [VALUE] exceeded limit of [LIMIT]*.	Check motor cooling lines. Check for closed valves. Check setting in SETUP1.
122	**RUN CAPACITY LIMITED**	LOW EVAP REFRIG TEMP	122->Evaporator Refrig Temp [VALUE] exceeded limit of [LIMIT]*.	Check refrigerant charge. Check for low entering cooler temperatures.
123	**RUN CAPACITY LIMITED**	HIGH COMPRESSOR LIFT	123->Surge Prevention Override: Lift Too High For Compressor.	Check for high condenser water temperatures or low suction temperature.
124	**RUN CAPACITY LIMITED**	MANUAL GUIDE VANE TARGET	124->Run Capacity Limited: Manual Guide Vane Target.	Target guide vane point has been forced in MAINSTAT screen. Release force to continue normal operation.
125	**RUN CAPACITY LIMITED**	LOW DISCHARGE SUPERHEAT	No messages.	Check oil charge. Check refrigerant charge.

*[LIMIT] is shown on the CVC as the temperature, pressure, voltage, etc., set point predefined or selected by the operator as an override, alert, or alarm condition. [VALUE] is the actual pressure, temperature, voltage, etc., at which the control has recorded at the time of the fault condition.

H. OUT-OF-RANGE SENSOR ALARMS

STATE	PRIMARY MESSAGE	SECONDARY MESSAGE	ALARM MESSAGE PRIMARY CAUSE	ADDITIONAL CAUSE/REMEDY
260	**SENSOR FAULT**	LEAVING CHILLED WATER	260->Sensor Fault: Leaving Chilled Water	Check sensor resistance or voltage drop. Check for proper wiring.
261	**SENSOR FAULT**	ENTERING CHILLED WATER	261->Sensor Fault: Entering Chilled Water	Check sensor resistance or voltage drop. Check for proper wiring.
262	**SENSOR FAULT**	CONDENSER PRESSURE	262->Sensor Fault: Condenser Pressure	Check sensor wiring.
263	**SENSOR FAULT**	EVAPORATOR PRESSURE	263->Sensor Fault: Evaporator Pressure	Check sensor wiring.
264	**SENSOR FAULT**	COMPRESSOR BEARING TEMP	264->Sensor Fault: Comp Thrust Bearing Temp	Check sensor resistance or voltage drop. Check for proper wiring.
265	**SENSOR FAULT**	COMPRESSOR MOTOR TEMP	265->Sensor Fault: Comp Motor Winding Temp	Check sensor resistance or voltage drop. Check for proper wiring.
266	**SENSOR FAULT**	COMP DISCHARGE TEMP	266->Sensor Fault: Comp Discharge Temp	Check sensor resistance or voltage drop. Check for proper wiring.
267	**SENSOR FAULT**	OIL SUMP TEMP	267->Sensor Fault: Oil Sump Temp	Check sensor resistance or voltage drop. Check for proper wiring.
268	**SENSOR FAULT**	COMP OIL PRESS DIFF	268->Sensor Fault: Oil Pump Delta P	Check sensor wiring and accuracy.
269	**SENSOR FAULT**	CHILLED WATER FLOW	269->Sensor Fault: Chilled Water Delta P	Check sensor wiring and accuracy.
270	**SENSOR FAULT**	COND WATER FLOW	270->Sensor Fault: Cond Water Delta P	Check sensor wiring and accuracy.

Table 8 — CVC Primary and Secondary Messages and Custom Alarm/Alert Messages with Troubleshooting Guides (cont)

I. CHILLER PROTECT LIMIT FAULTS

STATE	PRIMARY MESSAGE	SECONDARY MESSAGE	ALARM MESSAGE PRIMARY CAUSE	ADDITIONAL CAUSE/REMEDY
200	**PROTECTIVE LIMIT**	1M CONTACT FAULT	200->1M Aux Contact Fault; Check 1M Contactor and Aux	
201	**PROTECTIVE LIMIT**	2M CONTACT FAULT	201->2M Aux Contact Fault; Check 2M Contactor and Aux	
202	**PROTECTIVE LIMIT**	MOTOR AMPS NOT SENSED	202->Motor Amps Not Sensed — Average Line Current [VALUE]	Check for wiring of current transformers to the ISM. Check main circuit breaker for trip.
203	**FAILURE TO START**	EXCESS ACCELERATION TIME	203->Motor Acceleration Fault — Average Line Current [VALUE]	Check to be sure that the inlet guide vanes are closed at start-up. Check starter for proper operation. Reduce unit pressure if possible.
204	**FAILURE TO STOP**	1M/2M CONTACT FAULT	208->1M/2M Aux Contact Stop Fault; Check 1M/2M Contactors and Aux	
205	**FAILURE TO STOP**	MOTOR AMPS WHEN STOPPED	205->Motor Amps When Stopped — Average Line Current [VALUE]	
206	**PROTECTIVE LIMIT**	STARTER FAULT	206->Starter Fault Cutout; Check Optional Starter Contacts	
207	**PROTECTIVE LIMIT**	HIGH CONDENSER PRESSURE	207->High Cond Pressure cutout. [VALUE] exceeded limit of [LIMIT]*.	Check for high condenser water temperatures, low water flow, fouled tubes. Check for division plate/gasket bypass. Check for noncondensables. Check transducer wiring and accuracy.
208	**PROTECTIVE LIMIT**	EXCESSIVE MOTOR AMPS	208->Compressor Motor Amps [VALUE] exceeded limit of [LIMIT]*.	Check motor current for proper calibration. Check inlet guide vane actuator.
209	**PROTECTIVE LIMIT**	LINE PHASE LOSS	209->Line Phase Loss; Check ISM Fault History to Identify Phase	Check transformers to ISM. Check power distribution bus. Consult power company.
210	**PROTECTIVE LIMIT**	LINE VOLTAGE DROPOUT	210->Single Cycle Line Voltage Dropout	
211	**PROTECTIVE LIMIT**	HIGH LINE VOLTAGE	211->High Average Line Voltage [VALUE]	Check transformers to ISM. Check distribution bus. Consult power company.
212	**PROTECTIVE LIMIT**	LOW LINE VOLTAGE	212->Low Average Line Voltage [VALUE]	Check transformers to ISM. Check distribution bus. Consult power company.
213	**PROTECTIVE LIMIT**	STARTER MODULE RESET	213->Starter Module Power-On Reset When Running	
214	**PROTECTIVE LIMIT**	POWER LOSS	214->Power Loss: Check voltage supply	Check transformers to ISM. Check distribution bus. Consult power company.
215	**PROTECTIVE LIMIT**	LINE CURRENT IMBALANCE	215->Line Current Imbalance; Check ISM Fault History to Identify Phase	
216	**PROTECTIVE LIMIT**	LINE VOLTAGE IMBALANCE	216->Line Voltage Imbalance; Check ISM Fault History to Identify Phase	
217	**PROTECTIVE LIMIT**	MOTOR OVERLOAD TRIP	217->Motor Overload Trip; Check ISM configurations	Check ISM configuration.
218	**PROTECTIVE LIMIT**	MOTOR LOCKED ROTOR TRIP	218->Motor Locked Rotor Amps exceeded; Check Motor & ISM Config	Check ISM configuration.
219	**PROTECTIVE LIMIT**	STARTER LOCK ROTOR TRIP	219->Starter Locked Rotor Amps Rating exceeded	Check ISM configuration.
220	**PROTECTIVE LIMIT**	GROUND FAULT	220->Ground Fault Trip; Check Motor and Current Transformers	
221	**PROTECTIVE LIMIT**	PHASE REVERSAL TRIP	221->Phase Reversal Trip; Check Power Supply	
222	**PROTECTIVE LIMIT**	LINE FREQUENCY TRIP	222->Line Frequency — [VALUE] exceeded limit of [LIMIT]. Check Power Supply.	
223	**PROTECTIVE LIMIT**	STARTER MODULE FAILURE	223->Starter Module Hardware Failure	

Table 8 — CVC Primary and Secondary Messages and Custom Alarm/Alert Messages with Troubleshooting Guides (cont)

I. CHILLER PROTECT LIMIT FAULTS (cont)

STATE	PRIMARY MESSAGE	SECONDARY MESSAGE	ALARM MESSAGE PRIMARY CAUSE	ADDITIONAL CAUSE/REMEDY
227	**PROTECTIVE LIMIT**	OIL PRESS SENSOR FAULT	227->Oil Pump Delta P [VALUE] exceeded limit of [LIMIT]*.	Check transducer wiring and accuracy. Check power supply to pump Check pump operation. Check transducer calibration.
228	**PROTECTIVE LIMIT**	LOW OIL PRESSURE	228->Oil Pump Delta P [VALUE] exceeded limit of [LIMIT].*	Check transducer wiring and accuracy. Check power supply to pump. Check pump operation. Check oil level. Check for partially closed service valves. Check oil filters. Check for foaming oil at start-up. Check transducer calibration.
229	**PROTECTIVE LIMIT**	LOW CHILLED WATER FLOW	229->Low Chilled Water Flow; Check Delta P Config & Calibration	Perform pump control test. Check transducer accuracy and wiring. Check water valves. Check transducer calibration.
230	**PROTECTIVE LIMIT**	LOW CONDENSER WATER FLOW	230->Low Condenser Water Flow; Check Delta P Config & Calibration	Perform pump control test. Check transducer accuracy and wiring. Check water valves. Check transducer calibration.
231	**PROTECTIVE LIMIT**	HIGH DISCHARGE TEMP	231->Comp Discharge Temp [VALUE] exceeded limit of [LIMIT].*	Check sensor resistance or voltage drop. Check for proper wiring. Check for proper condenser flow and temperature. Check for proper inlet guide vane and diffuser actuator operation. Check for fouled tubes or noncondensables in the system.
232	**PROTECTIVE LIMIT**	LOW REFRIGERANT TEMP	232->Evaporator Refrig Temp [VALUE] exceeded limit of [LIMIT]*.	Check for proper refrigerant charge. Check float operation. Check for proper fluid flow and temperature. Check for proper inlet guide vane operation.
233	**PROTECTIVE LIMIT**	HIGH MOTOR TEMPERATURE	233->Comp Motor Winding Temp [VALUE] exceeded limit of [LIMIT]*.	Check motor sensors wiring and accuracy. Check motor cooling line for proper operation, or restrictions. Check for excessive starts within a short time span.
234	**PROTECTIVE LIMIT**	HIGH BEARING TEMPERATURE	234->Comp Thrust Bearing Temp [VALUE] exceeded limit of [LIMIT]*.	Check oil heater for proper operation. Check for low oil level, partially closed oil supply valves, clogged oil filters, etc. Check the sensor wiring and accuracy.
235	**PROTECTIVE LIMIT**	HIGH CONDENSER PRESSURE	235->Condenser Pressure [VALUE] exceeded limit of [LIMIT]*.	Check for high condenser water temperatures, low water flow, fouled tubes. Check for division plate/gasket bypass. Check for noncondensables. Check transducer wiring and accuracy.
236	**PROTECTIVE LIMIT**	CCN OVERRIDE STOP	236->CCN Override Stop while in LOCAL run mode	CCN has signaled the chiller to stop. Reset and restart when ready. If the signal was sent by the CVC, release the stop signal on the STATUS01 table.
237	**PROTECTIVE LIMIT**	SPARE SAFETY DEVICE	237->Spare Safety Device	Spare safety input has tripped or factory installed jumper is not present.
238	**PROTECTIVE LIMIT**	EXCESSIVE COMPR SURGE	238->Compressor Surge: Check condenser water temp and flow	Check condenser flow and temperatures. Check surge protection configuration.
239	**PROTECTIVE LIMIT**	TRANSDUCER VOLTAGE FAULT	239->Transducer Voltage Ref [VALUE] exceeded limit of [LIMIT]*.	
240	**PROTECTIVE LIMIT**	LOW DISCHARGE SUPERHEAT	240->Check for Oil in Refrigerant or Overcharge of Refrigerant	
241	**LOSS OF COMMUNICATION**	WITH STARTER MODULE	241->Loss of Communication With Starter.	Check wiring to ISM.
242	**LOSS OF COMMUNICATION**	WITH CCM MODULE	242->Loss of Communication With CCM.	Check wiring to CCM.
243	**POTENTIAL FREEZE-UP**	EVAP PRESS/TEMP TOO LOW	243->Evaporator Refrig Temp [VALUE] exceeded limit of [LIMIT]*.	Check for proper refrigerant charge. Check float operation. Check for proper fluid flow and temperature. Check for proper inlet guide vane operation.
244	**POTENTIAL FREEZE-UP**	COND PRESS/TEMP TOO LOW	244->Condenser Refrig Temp [VALUE] exceeded limit of [LIMIT]*.	
245	**PROTECTIVE LIMIT**	VFD SPEED OUT OF RANGE	245->Actual VFD Speed [VALUE] exceeded limit of [LIMIT]*.	

Table 8 — CVC Primary and Secondary Messages and Custom Alarm/Alert Messages with Troubleshooting Guides (cont)

I. CHILLER PROTECT LIMIT FAULTS (cont)

STATE	PRIMARY MESSAGE	SECONDARY MESSAGE	ALARM MESSAGE PRIMARY CAUSE	ADDITIONAL CAUSE/REMEDY
246	**PROTECTIVE LIMIT**	INVALID DIFFUSER CONFIG	246->Diffuser Control Invalid Configuration: Check SETUP2 Entries.	Check diffuser/inlet guide vane schedule.
247	**PROTECTIVE LIMIT**	DIFFUSER POSITION FAULT	247->Diffuser Position Fault: Check Guide Vane and Diffuser Actuators	Check rotating stall transducer wiring and accuracy. Check diffuser schedule. Check for proper operation of diffuser actuator and inlet guide vane actuator. Check diffuser coupling. Check inlet guide vane operation. Check inlet guide vane calibration. Check diffuser/inlet guide vane schedule. Check diffuser mechanical set-up for proper orientation. If not using variable diffuser, check that the option has not been enabled.
248	**PROTECTIVE LIMIT**	SPARE TEMPERATURE #1	248->Spare Temperature #1 [VALUE] exceeded limit of [LIMIT]*.	
249	**PROTECTIVE LIMIT**	SPARE TEMPERATURE #2	249->Spare Temperature #2 [VALUE] exceeded limit of [LIMIT]*.	

*[LIMIT] is shown on the CVC as the temperature, pressure, voltage, etc., set point predefined or selected by the operator as an override, alert, or alarm condition. [VALUE] is the actual pressure, temperature, voltage, etc., at which the control tripped.

J. CHILLER ALERTS

STATE	PRIMARY MESSAGE	SECONDARY MESSAGE	ALARM MESSAGE PRIMARY CAUSE	ADDITIONAL CAUSE/REMEDY
140	**SENSOR ALERT**	LEAVING COND WATER TEMP	140->Sensor Fault: Check Leaving Cond Water Sensor	Check sensor resistance or voltage drop. Check for proper wiring.
141	**SENSOR ALERT**	ENTERING COND WATER TEMP	141->Sensor Fault: Check Entering Cond Water Sensor	Check sensor resistance or voltage drop. Check for proper wiring.
142	**LOW OIL PRESSURE ALERT**	CHECK OIL FILTER	142->Low Oil Pressure Alert. Check Oil Filter.	Check for partially or closed shut-off valves. Check oil filter. Check oil pump and power supply. Check oil level. Check for foaming oil at start-up. Check transducer wiring and accuracy.
143	**AUTORESTART PENDING**	LINE PHASE LOSS	143->Line Phase Loss	Power loss has been detected in any phase. Chiller automatically restarting.
144	**AUTORESTART PENDING**	LINE VOLTAGE DROP OUT	144->Single Cycle Line Voltage Dropout	A drop in line voltage has been detected within 2 voltage cycles. Chiller automatically restarting if restart is enabled.
145	**AUTORESTART PENDING**	HIGH LINE VOLTAGE	145->Line Overvoltage — Average Line Volt [VALUE]	Check line power.
146	**AUTORESTART PENDING**	LOW LINE VOLTAGE	146->Line Undervoltage — Average Line Volt [VALUE]	Check line power.
147	**AUTORESTART PENDING**	STARTER MODULE RESET	147->Starter Module Power-On Reset When Running	ISM has detected a hardware fault and has reset. Chiller automatically restarting.
148	**AUTORESTART PENDING**	POWER LOSS	148->Control Power-Loss When Running	Check control power.
149	**SENSOR ALERT**	HIGH DISCHARGE TEMP	149->Comp Discharge Temp [VALUE] exceeded limit of [LIMIT]*.	Check sensor resistance or voltage drop. Check for proper wiring. Check for proper condenser flow and temperature. Check for high lift or low load. Check for proper inlet guide vane and diffuser actuator operation (XR5 Only). Check for fouled tubes or noncondensables in the refrigerant system.
150	**SENSOR ALERT**	HIGH BEARING TEMPERATURE	150->Comp Thrust Bearing Temp [VALUE] exceeded limit of [LIMIT]*.	Check sensor resistance or voltage drop. Check for proper wiring. Check for partially closed service valves. Check oil cooler TXV. Check oil filter. Check oil level.

Table 8 — CVC Primary and Secondary Messages and Custom Alarm/Alert Messages with Troubleshooting Guides (cont)

J. CHILLER ALERTS (cont)

STATE	PRIMARY MESSAGE	SECONDARY MESSAGE	ALARM MESSAGE PRIMARY CAUSE	ADDITIONAL CAUSE/REMEDY
151	**CONDENSER PRESSURE ALERT**	PUMP RELAY ENERGIZED	151->High Condenser Pressure [VALUE]: Pump Energized to Reduce Pressure.	Check sensor wiring and accuracy. Check condenser flow and fluid temperature. Check for fouled tubes. This alarm is not caused by the High Pressure Switch.
152	**RECYCLE ALERT**	EXCESSIVE RECYCLE STARTS	152->Excessive recycle starts.	Chiller load is too low to keep compressor on line and there has been more than 5 starts in 4 hours. Increase chiller load, adjust hot gas bypass, increase RECYCLE RESTART DELTA T from SETUP1 Screen.
153	**no message: ALERT only**	no message; ALERT only	153->Lead/Lag Disabled: Duplicate Chiller Address; Check Configuration	Illegal chiller address configuration in Lead/ Lag screen. Both chillers require a different address.
154	**POTENTIAL FREEZE-UP**	COND PRESS/TEMP TOO LOW	154->Condenser freeze up prevention	The condenser pressure transducer is reading a pressure that could freeze the condenser tubes. Check for condenser refrigerant leaks. Check fluid temperature. Check sensor wiring and accuracy. Place the chiller in PUMPDOWN mode if the vessel is evacuated.
155	**OPTION SENSOR FAULT**	REMOTE RESET SENSOR	155->Sensor Fault/Option Disabled: Remote Reset Sensor	Check sensor resistance or voltage drop. Check for proper wiring.
156	**OPTION SENSOR FAULT**	AUTO CHILLED WATER RESET	156->Sensor Fault/Option Disabled: Auto Chilled Water Reset	Check sensor resistance or voltage drop. Check for proper wiring.
157	**OPTION SENSOR FAULT**	AUTO DEMAND LIMIT INPUT	157->Sensor Fault/Option Disabled: Auto Demand Limit Input	Check sensor resistance or voltage drop. Check for proper wiring.
158	**SENSOR ALERT**	SPARE TEMPERATURE #1	158->Spare Temperature #1 [VALUE] exceeded limit of [LIMIT].*	Check sensor resistance or voltage drop. Check for proper wiring.
159	**SENSOR ALERT**	SPARE TEMPERATURE #2	159->Spare Temperature #2 [VALUE] exceeded limit of [LIMIT].*	Check sensor resistance or voltage drop. Check for proper wiring.
160	**DIFFUSER ALERT**	DIFFUSER POSITION	160->Diffuser Position Alert; Check Diffuser Configuration.	Check diffuser configuration in SETUP2 screen.

*[LIMIT] is shown on the CVC as the temperature, pressure, voltage, etc., set point predefined or selected by the operator as an override, alert, or alarm condition. [VALUE] is the actual pressure, temperature, voltage, etc., at which the control tripped.

Table 9A — Thermistor Temperature (F) vs Resistance/Voltage Drop

TEMPERATURE (F)	VOLTAGE DROP (V)	RESISTANCE (Ohms)
−25	4.821	98,010
−24	4.818	94,707
−23	4.814	91,522
−22	4.806	88,449
−21	4.800	85,486
−20	4.793	82,627
−19	4.786	79,871
−18	4.779	77,212
−17	4.772	74,648
−16	4.764	72,175
−15	4.757	69,790
−14	4.749	67,490
−13	4.740	65,272
−12	4.734	63,133
−11	4.724	61,070
−10	4.715	59,081
−9	4.705	57,162
−8	4.696	55,311
−7	4.688	53,526
−6	4.676	51,804
−5	4.666	50,143
−4	4.657	48,541
−3	4.648	46,996
−2	4.636	45,505
−1	4.624	44,066
0	4.613	42,679
1	4.602	41,339
2	4.592	40,047
3	4.579	38,800
4	4.567	37,596
5	4.554	36,435
6	4.540	35,313
7	4.527	34,231
8	4.514	33,185
9	4.501	32,176
10	4.487	31,202
11	4.472	30,260
12	4.457	29,351
13	4.442	28,473
14	4.427	27,624
15	4.413	26,804
16	4.397	26,011
17	4.381	25,245
18	4.366	24,505
19	4.348	23,789
20	4.330	23,096
21	4.313	22,427
22	4.295	21,779
23	4.278	21,153
24	4.258	20,547
25	4.241	19,960
26	4.223	19,393
27	4.202	18,843
28	4.184	18,311
29	4.165	17,796
30	4.145	17,297
31	4.125	16,814
32	4.103	16,346
33	4.082	15,892
34	4.059	15,453
35	4.037	15,027
36	4.017	14,614
37	3.994	14,214
38	3.968	13,826
39	3.948	13,449
40	3.927	13,084
41	3.902	12,730
42	3.878	12,387
43	3.854	12,053
44	3.828	11,730
45	3.805	11,416
46	3.781	11,112
47	3.757	10,816
48	3.729	10,529
49	3.705	10,250
50	3.679	9,979
51	3.653	9,717
52	3.627	9,461
53	3.600	9,213
54	3.575	8,973
55	3.547	8,739
56	3.520	8,511
57	3.493	8,291
58	3.464	8,076
59	3.437	7,868
60	3.409	7,665
61	3.382	7,468
62	3.353	7,277
63	3.323	7,091
64	3.295	6,911
65	3.267	6,735
66	3.238	6,564
67	3.210	6,399
68	3.181	6,238
69	3.152	6,081
70	3.123	5,929
71	3.093	5,781
72	3.064	5,637
73	3.034	5,497
74	3.005	5,361
75	2.977	5,229
76	2.947	5,101
77	2.917	4,976
78	2.884	4,855
79	2.857	4,737
80	2.827	4,622
81	2.797	4,511
82	2.766	4,403
83	2.738	4,298
84	2.708	4,196
85	2.679	4,096
86	2.650	4,000
87	2.622	3,906
88	2.593	3,814
89	2.563	3,726
90	2.533	3,640
91	2.505	3,556
92	2.476	3,474
93	2.447	3,395
94	2.417	3,318
95	2.388	3,243
96	2.360	3,170
97	2.332	3,099
98	2.305	3,031
99	2.277	2,964
100	2.251	2,898
101	2.217	2,835
102	2.189	2,773
103	2.162	2,713
104	2.136	2,655
105	2.107	2,597
106	2.080	2,542
107	2.053	2,488
108	2.028	2,436
109	2.001	2,385
110	1.973	2,335
111	1.946	2,286
112	1.919	2,239
113	1.897	2,192
114	1.870	2,147
115	1.846	2,103
116	1.822	2,060
117	1.792	2,018
118	1.771	1,977
119	1.748	1,937
120	1.724	1,898
121	1.702	1,860
122	1.676	1,822
123	1.653	1,786
124	1.630	1,750
125	1.607	1,715
126	1.585	1,680
127	1.562	1,647
128	1.538	1,614
129	1.517	1,582
130	1.496	1,550
131	1.474	1,519
132	1.453	1,489
133	1.431	1,459
134	1.408	1,430
135	1.389	1,401
136	1.369	1,373
137	1.348	1,345
138	1.327	1,318
139	1.308	1,291
140	1.291	1,265
141	1.289	1,240
142	1.269	1,214
143	1.250	1,190
144	1.230	1,165
145	1.211	1,141
146	1.192	1,118
147	1.173	1,095
148	1.155	1,072
149	1.136	1,050
150	1.118	1,029
151	1.100	1,007
152	1.082	986
153	1.064	965
154	1.047	945
155	1.029	925
156	1.012	906
157	0.995	887
158	0.978	868
159	0.962	850
160	0.945	832
161	0.929	815
162	0.914	798
163	0.898	782
164	0.883	765
165	0.868	750
166	0.853	734
167	0.838	719
168	0.824	705
169	0.810	690
170	0.797	677
171	0.783	663
172	0.770	650
173	0.758	638
174	0.745	626
175	0.734	614
176	0.722	602
177	0.710	591
178	0.700	581
179	0.689	570
180	0.678	561
181	0.668	551
182	0.659	542
183	0.649	533
184	0.640	524
185	0.632	516
186	0.623	508
187	0.615	501
188	0.607	494
189	0.600	487
190	0.592	480
191	0.585	473
192	0.579	467
193	0.572	461
194	0.566	456
195	0.560	450
196	0.554	445
197	0.548	439
198	0.542	434
199	0.537	429
200	0.531	424
201	0.526	419
202	0.520	415
203	0.515	410
204	0.510	405
205	0.505	401
206	0.499	396
207	0.494	391
208	0.488	386
209	0.483	382
210	0.477	377
211	0.471	372
212	0.465	367
213	0.459	361
214	0.453	356
215	0.446	350
216	0.439	344
217	0.432	338
218	0.425	332
219	0.417	325
220	0.409	318
221	0.401	311
222	0.393	304
223	0.384	297
224	0.375	289
225	0.366	282

Table 9B — Thermistor Temperature (C) vs Resistance/Voltage Drop

TEMPERATURE (C)	VOLTAGE DROP (V)	RESISTANCE (Ohms)
−40	4.896	168 230
−39	4.889	157 440
−38	4.882	147 410
−37	4.874	138 090
−36	4.866	129 410
−35	4.857	121 330
−34	4.848	113 810
−33	4.838	106 880
−32	4.828	100 260
−31	4.817	94 165
−30	4.806	88 480
−29	4.794	83 170
−28	4.782	78 125
−27	4.769	73 580
−26	4.755	69 250
−25	4.740	65 205
−24	4.725	61 420
−23	4.710	57 875
−22	4.693	54 555
−21	4.676	51 450
−20	4.657	48 536
−19	4.639	45 807
−18	4.619	43 247
−17	4.598	40 845
−16	4.577	38 592
−15	4.554	38 476
−14	4.531	34 489
−13	4.507	32 621
−12	4.482	30 866
−11	4.456	29 216
−10	4.428	27 633
−9	4.400	26 202
−8	4.371	24 827
−7	4.341	23 532
−6	4.310	22 313
−5	4.278	21 163
−4	4.245	20 079
−3	4.211	19 058
−2	4.176	18 094
−1	4.140	17 184
0	4.103	16 325
1	4.065	15 515
2	4.026	14 749
3	3.986	14 026
4	3.945	13 342
5	3.903	12 696
6	3.860	12 085
7	3.816	11 506
8	3.771	10 959
9	3.726	10 441
10	3.680	9 949
11	3.633	9 485
12	3.585	9 044
13	3.537	8 627
14	3.487	8 231
15	3.438	7 855
16	3.387	7 499
17	3.337	7 161
18	3.285	6 840
19	3.234	6 536
20	3.181	6 246
21	3.129	5 971
22	3.076	5 710
23	3.023	5 461
24	2.970	5 225
25	2.917	5 000
26	2.864	4 786
27	2.810	4 583
28	2.757	4 389
29	2.704	4 204
30	2.651	4 028
31	2.598	3 861
32	2.545	3 701
33	2.493	3 549
34	2.441	3 404
35	2.389	3 266
36	2.337	3 134
37	2.286	3 008
38	2.236	2 888
39	2.186	2 773
40	2.137	2 663
41	2.087	2 559
42	2.039	2 459
43	1.991	2 363
44	1.944	2 272

TEMPERATURE (C)	VOLTAGE DROP (V)	RESISTANCE (Ohms)
45	1.898	2 184
46	1.852	2 101
47	1.807	2 021
48	1.763	1 944
49	1.719	1 871
50	1.677	1 801
51	1.635	1 734
52	1.594	1 670
53	1.553	1 609
54	1.513	1 550
55	1.474	1 493
56	1.436	1 439
57	1.399	1 387
58	1.363	1 337
59	1.327	1 290
60	1.291	1 244
61	1.258	1 200
62	1.225	1 158
63	1.192	1 118
64	1.160	1 079
65	1.129	1 041
66	1.099	1 006
67	1.069	971
68	1.040	938
69	1.012	906
70	0.984	876
71	0.949	836
72	0.920	805
73	0.892	775
74	0.865	747
75	0.838	719
76	0.813	693
77	0.789	669
78	0.765	645
79	0.743	623
80	0.722	602
81	0.702	583
82	0.683	564
83	0.665	547
84	0.648	531
85	0.632	516
86	0.617	502
87	0.603	489
88	0.590	477
89	0.577	466
90	0.566	456
91	0.555	446
92	0.545	436
93	0.535	427
94	0.525	419
95	0.515	410
96	0.506	402
97	0.496	393
98	0.486	385
99	0.476	376
100	0.466	367
101	0.454	357
102	0.442	346
103	0.429	335
104	0.416	324
105	0.401	312
106	0.386	299
107	0.370	285

Control Modules

⚠ CAUTION

Turn controller power off before servicing controls. This ensures safety and prevents damage to the controller.

The CVC, CCM, and ISM modules perform continuous diagnostic evaluations of the hardware to determine its condition. Proper operation of all modules is indicated by LEDs (light-emitting diodes) located on the circuit board of the CVC, CCM, and ISM.

There is one green LED located on the CCM and ISM boards respectively, and one red LED located on the CVC, CCM, and ISM boards respectively.

RED LED (Labeled as STAT) — If the red LED:

- blinks continuously at a 2-second interval, the module is operating properly
- is lit continuously, there is a problem that requires replacing the module
- is off continuously, the power should be checked
- blinks 3 times per second, a software error has been discovered and the module must be replaced

If there is no input power, check the fuses and circuit breaker. If the fuse is good, check for a shorted secondary of the transformer or, if power is present to the module, replace the module.

GREED LED (Labeled as COM) — These LEDs indicate the communication status between different parts of the controller and the network modules and should blink continuously.

Notes on Module Operation

1. The chiller operator monitors and modifies configurations in the microprocessor by using the 4 softkeys and the CVC. Communications between the CVC and the CCM is accomplished through the SIO (Sensor Input/Output) bus, which is a phone cable. The communication between the CCM and ISM is accomplished through the sensor bus, which is a 3-wire cable.
2. If a green LED is on continuously, check the communication wiring. If a green LED is off, check the red LED operation. If the red LED is normal, check the module address switches (Fig. 36-38).

   All system operating intelligence resides in the CVC. Some safety shutdown logic resides in the ISM in case communications are lost between the ISM and CVC. Outputs are controlled by the CCM and ISM as well.
3. Power is supplied to the modules within the control panel via 24-vac power sources.

   The transformers are located within the power panel, with the exception of the ISM, which operates from a 115-vac power source and has its own 24-vac transformer located in the module.

   In the power panel, T1 supplies power to the compressor oil heater, oil pump, and optional hot gas bypass, and T2 supplies power to both the CVC and CCM.

   Power is connected to Plug J1 on each module.

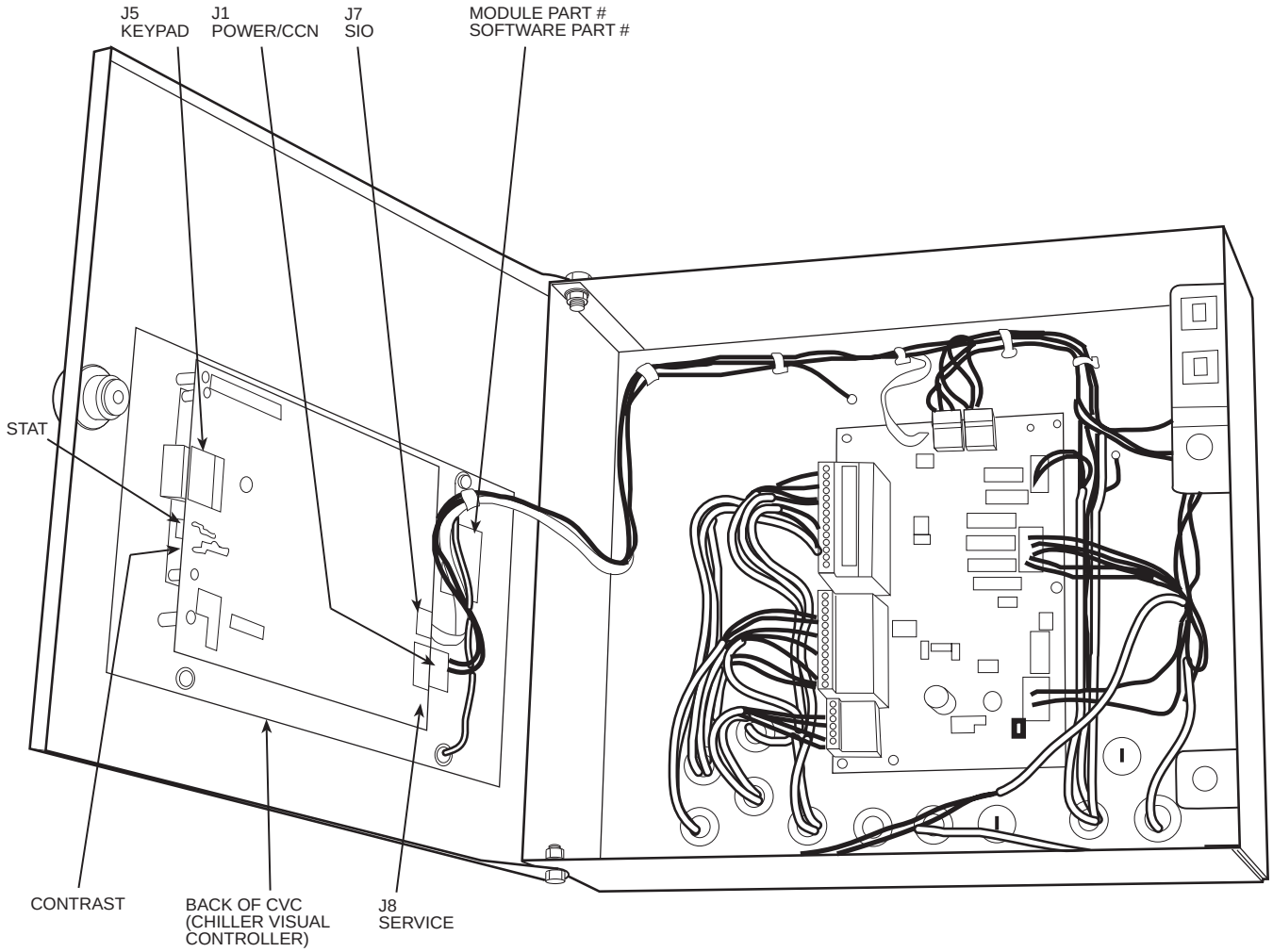

Fig. 36 — Rear of CVC (Chiller Visual Controller)

Chiller Control Module (CCM) (Fig. 37)

INPUTS — Each input channel has 2 or 3 terminals. Refer to individual chiller wiring diagrams for the correct terminal numbers for your application.

OUTPUTS — Output is 24 vac. There are 2 terminals per output. Refer to the chiller wiring diagram for your specific application for the correct terminal numbers.

Integrated Starter Module (Fig. 38)

INPUTS — Inputs on strips J3-5 and J3 are analog and discrete (on/off) inputs. The specific application of the chiller determines which terminals are used. Refer to the individual chiller wiring diagram for the correct terminal numbers for your application.

OUTPUTS — Outputs are 24 vac and wired to strip J9. There are 2 terminals per output.

Replacing Defective Processor Modules — The module replacement part number is printed on a small label on the rear of the CVC module. The chiller model and serial numbers are printed on the chiller nameplate located on an exterior corner post. The proper software is factory-installed by Carrier in the replacement module. When ordering a replacement chiller visual control (CVC) module, specify the complete replacement part number, full chiller model number, and chiller serial number. The installer must configure the new module to the original chiller data. Follow the procedures described in the Software Configuration section on page 53.

⚠ CAUTION

Electrical shock can cause personal injury. Disconnect all electrical power before servicing.

INSTALLATION

1. Verify the existing CVC module is defective by using the procedure described in the Troubleshooting Guide section, page 69, and the Control Modules section, page 80. Do not select the ATTACH TO NETWORK DEVICE table if the CVC indicates a communication failure.
2. Data regarding the CVC configuration should have been recorded and saved. This data must be reconfigured into the new CVC. If this data is not available, follow the procedures described in the Software Configuration section.

   If a CCN Building Supervisor or Service Tool is available, the module configuration should have already been uploaded into memory. When the new module is installed, the configuration can be downloaded from the computer.

   Any communication wires from other chillers or CCN modules should be disconnected to prevent the new CVC module from uploading incorrect run hours into memory.
3. To install this module, record values for the *TOTAL COMPRESSOR STARTS* and the *COMPRESSOR ONTIME* from the MAINSTAT screen on the CVC.
4. Power off the controls.
5. Remove the old CVC.
6. Install the new CVC module. Turn the control power back on.
7. The CVC now automatically attaches to the local network device.
8. Access the MAINSTAT table and highlight the *TOTAL COMPRESSOR STARTS* parameter. Press the SELECT softkey. Increase or decrease the value to match the starts value recorded in Step 3. Press the ENTER softkey when you reach the correct value. Now, move the highlight bar to the *COMPRESSOR ONTIME* parameter. Press the SELECT softkey. Increase or decrease the run hours value to match the value recorded in Step 2. Press the ENTER softkey when the correct value is reached.
9. Complete the CVC installation. Following the instructions in the Input Service Configurations section, page 53, input all the proper configurations such as the time, date, etc. Check the pressure transducer calibrations. PSIO installation is now complete.

Solid-State Starters — Troubleshooting information pertaining to the Benshaw, Inc., solid-state starter may be found in the following paragraphs and in the Carrier RE-DISTART MICRO Instruction Manual supplied by the starter vendor.

Attempt to solve the problem by using the following preliminary checks before consulting the troubleshooting tables found in the Benshaw manual.

⚠ WARNING

1. Motor terminals or starter output lugs or wire should not be touched without disconnecting the incoming power supply. The silicon control rectifiers (SCRs) although technically turned off still have AC mains potential on the output of the starter.
2. Power is present on all yellow wiring throughout the system even though the main circuit breaker in the unit is off.

With power off:

- Inspect for physical damage and signs of arcing, overheating, etc.
- Verify the wiring to the starter is correct.
- Verify all connections in the starter are tight.
- Check the control transformer fuses.

TESTING SILICON CONTROL RECTIFIERS IN THE BENSHAW, INC., SOLID-STATE STARTERS — If an SCR is suspected of being defective, use the following procedure as part of a general troubleshooting guide.

1. Verify power is applied.
2. Verify the state of each SCR light-emitting diode (LED) on the micropower card.

   NOTE: All LEDs should be lit. If any red or green side of these LEDs is not lit, the line voltage is not present or one or more SCRs has failed.
3. Check incoming power. If voltage is not present check the incoming line. If voltage is present, proceed to Steps 4 through 11.

   NOTE: If after completing Steps 4 - 11 all measurements are within specified limits, the SCRs are functioning normally. If after completing Steps 4 - 11 resistance measurements are outside the specified limits, the motor leads on the starter power lugs T1 through T6 should be removed and the steps repeated. This will identify if abnormal resistance measurements are being influenced by the motor windings.
4. Remove power from the starter unit.

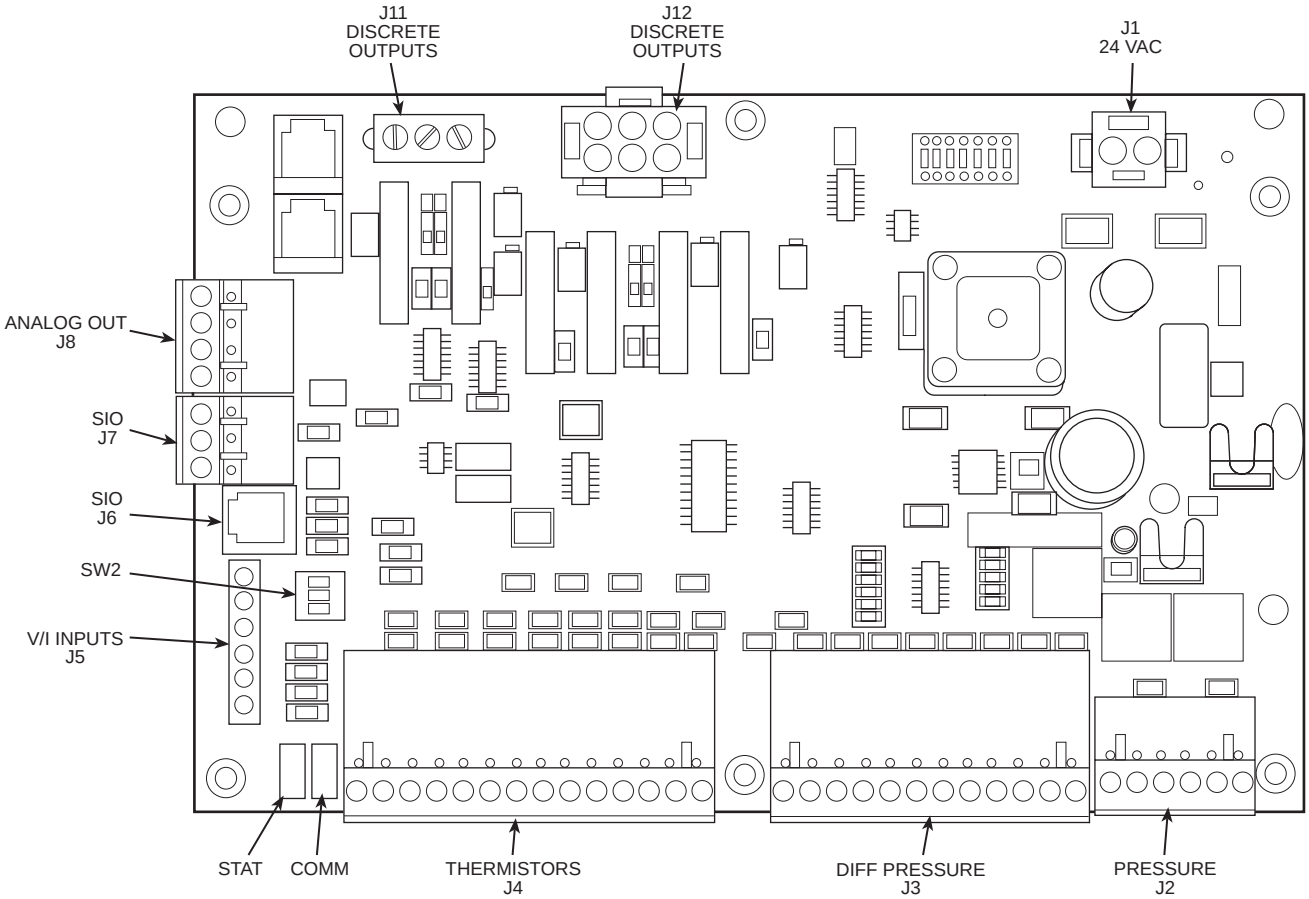

Fig. 37 — Chiller Control Module (CCM)

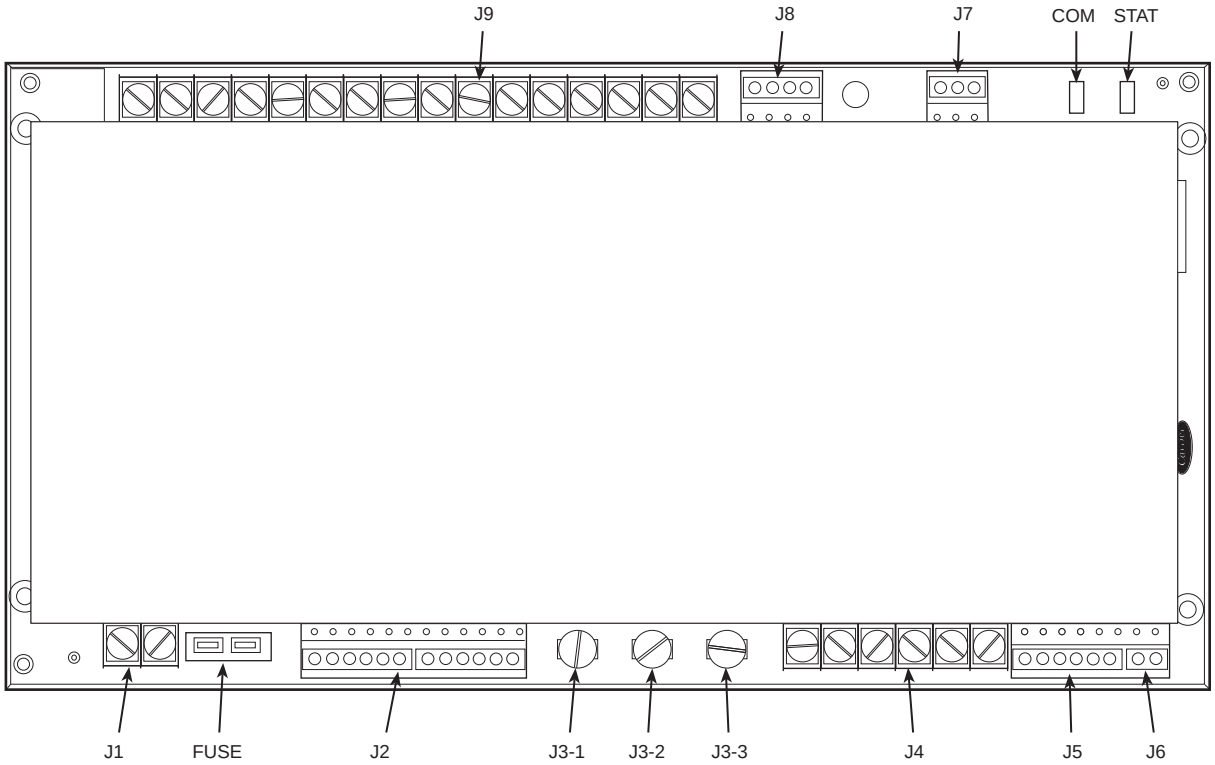

Fig. 38 — Integrated Starter Module (ISM)

5. Using an ohmmeter, perform the following resistance measurements and record the results:

MEASURE BETWEEN	SCR PAIRS BEING CHECKED	RECORDED VALUE
T1 and T6	3 and 6	
T2 and T4	2 and 5	
T3 and T5	1 and 4	

If all measured values are greater than 5K ohms, proceed to Step 10. If any values are less than 5K ohms, one or more of the SCRs in that pair is shorted.

6. Remove both SCRs in the pair (See SCR Removal/ Installation).
7. Using an ohmmeter, measure the resistance (anode to cathode) of each SCR to determine which device has failed.

   NOTE: Both SCRs may be defective, but typically, only one is shorted. If both SCRs provide acceptable resistance measurements, proceed to Step 10.
8. Replace the defective SCR(s).
9. Retest the ‘‘pair’’ for resistance values indicated above.
10. On the right side of the firing card, measure the resistance between the red and white gate/cathode leads for each SCR (1 through 6). A measurement between 5 and 50 ohms is normal. Abnormally high values may indicate a failed gate for that SCR.

⚠ CAUTION

If any red or white SCR gate leads are removed from the firing card or an SCR, care must be taken to ensure the leads are replaced EXACTLY as they were (white wires to gates, and red wires to cathodes on both the firing card and SCR), or damage to the starter and/or motor may result.

11. Replace the SCRs and retest the pair.

SCR REMOVAL/INSTALLATION — Refer to Fig. 39.

1. Remove the SCR by loosening the clamping bolts on each side of the SCR,
2. After the SCR has been removed and the bus work is loose, apply a thin coat of either silicon based thermal joint compound or a joint compound for aluminum or copper wire connections to the contact surfaces of the replacement SCR. This allows for improved heat dissipation and electrical conductivity.
3. Place the SCR between the roll pins on the heatsink assemblies so the roll pins fit into the small holes in each side of the SCR.

   NOTE: Ensure the SCR is installed so the cathode side is the side from which the red wire extends. The heatsink is labeled to show the correct orientation.
4. Hand tighten the bolts until the SCR contacts the heatsink.
5. Using quarter-turn increments, alternating between clamping bolts, apply the appropriate number of whole turns referencing the table in Fig. 39.

⚠ CAUTION

Care must be taken to prevent nut rotation while tightening the bolts. If the nut rotates while tighting the bolt, SCR replacement must be started over.

6. Reconnect the red (cathode) wire from the SCR and the white (anode-gate) wire to the appropriate location on the firing card (i.e., SCR1 wires to firing card terminal G1-white wire, and K1-red wire).
7. Reconnect all other wiring and bus work.
8. Return starter to normal operation.

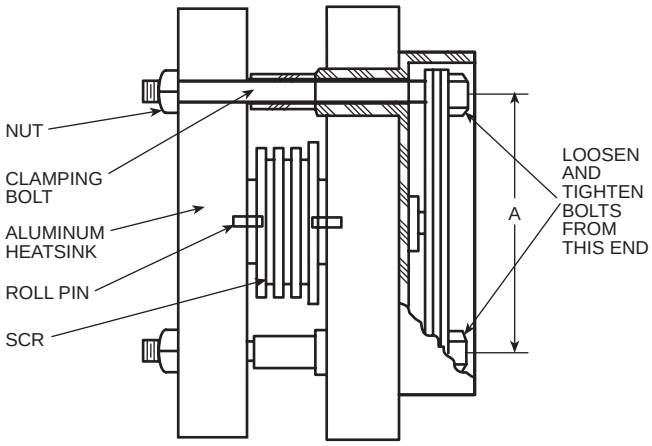

SCR PART NUMBER BISCR	CLAMP SIZE	A DIMENSION (in.)	NO OF TURNS	BOLT LENGTH (in.)
6601218	1030	2.75 (70 mm)	1½	3.0 (76 mm)
6601818	1030	2.75 (70 mm)	1½	3.0 (76 mm)
8801230	1035	2.75 (70 mm)	1¾	3.5 (89 mm)
8801830	1035	2.75 (70 mm)	1¾	3.0 (89 mm)
15001850	2040	4.00 (102 mm)	2¾	4.0 (102 mm)
15001850	2050	4.00 (102 mm)	2¾	5.0 (127 mm)
220012100	Consult Benshaw Representative			
330018500	Consult Benshaw Representative			

Fig. 39 — SCR Installation

Physical Data — Tables 10A-17 and Fig. 40-47 provide additional information on component weights, compressor fits and clearances, physical and electrical data, and wiring schematics for the operator's convenience during troubleshooting.

Table 10A — Heat Exchanger Data (English)

CODE	NUMBER OF TUBES		ENGLISH					
			Dry (Rigging) Weight (lb)		Chiller Charge			
					Refrigerant Weight		Water Volume (gal)	
	Cooler	Condenser	Cooler Only	Condenser Only	Cooler	Condenser	Cooler	Condenser
10	142	180	2,742	2,704	290	200	34	42
11	161	200	2,812	2,772	310	200	37	45
12	180	225	2,883	2,857	330	200	40	49
15	142	180	3,003	2,984	320	250	39	48
16	161	200	3,089	3,068	340	250	43	52
17	180	225	3,176	3,173	370	250	47	57
20	200	218	3,442	3,523	345	225	48	48
21	240	266	3,590	3,690	385	225	55	55
22	282	315	3,746	3,854	435	225	62	63
30	200	218	4,137	3,694	350	260	55	55
31	240	267	4,319	3,899	420	260	64	65
32	280	315	4,511	4,100	490	260	72	74
35	200	218	4,409	4,606	400	310	61	62
36	240	267	4,617	4,840	480	310	70	72
37	280	315	4,835	5,069	550	310	80	83
40	324	370	5,898	6,054	560	280	89	96
41	364	417	6,080	6,259	630	280	97	106
42	400	463	6,244	6,465	690	280	105	114
45	324	370	6,353	6,617	640	330	98	106
46	364	417	6,561	6,851	720	330	108	117
47	400	463	6,748	7,085	790	330	116	127
50	431	509	7,015	7,285	750	400	115	128
51	485	556	7,262	7,490	840	400	126	137
52	519	602	7,417	7,683	900	400	133	136
55	431	509	7,559	7,980	870	490	127	142
56	485	556	7,839	8,214	940	490	139	152
57	519	602	8,016	8,434	980	490	147	162
60	557	648	8,270	8,286	940	420	144	159
61	599	695	8,462	8,483	980	420	153	168
62	633	741	8,617	8,676	1020	420	160	177
65	557	648	8,943	9,204	1020	510	160	176
66	599	695	9,161	9,428	1060	510	169	187
67	633	741	9,338	9,648	1090	510	177	197
70	644	781	12,395	13,139	1220	780	224	209
71	726	870	12,821	13,568	1340	780	243	229
72	790	956	13,153	13,969	1440	780	257	248
75	644	781	13,293	14,211	1365	925	245	234
76	726	870	13,780	14,702	1505	925	266	257
77	790	956	14,159	15,160	1625	925	283	278
80	829	990	16,156	15,746	1500	720	285	264
81	901	1080	16,530	16,176	1620	720	302	284
82	976	1170	16,919	16,606	1730	720	319	304
85	829	990	17,296	17,001	1690	860	313	295
86	901	1080	17,723	17,492	1820	860	331	318
87	976	1170	18,169	17,984	1940	860	351	341

NOTES:
1. Cooler data: based on a cooler with standard wall tubing, 2-pass, 150 psig, nozzle-in-head waterbox with victaulic grooves. Weight includes suction elbow, control panel, and distribution piping. Weight does not include compressor.
2. Condenser data: based on a condenser with standard wall tubing, 2-pass, 150 psig, nozzle-in-head waterbox with victaulic grooves. Weight includes the float valve, discharge elbow, and distribution piping. Weight does not include unit-mounted starter, isolation valves, and pumpout unit.

Table 10B — Heat Exchanger Data (SI)

CODE	NUMBER OF TUBES		SI					
			Dry (Rigging) Weight (kg)		Chiller Charge			
					Refrigerant Weight		Water Volume (L)	
	Cooler	Condenser	Cooler Only	Condenser Only	Cooler	Condenser	Cooler	Condenser
10	142	180	1244	1226	132	91	129	158
11	161	200	1275	1257	141	91	140	170
12	180	225	1307	1296	150	91	152	185
15	142	180	1362	1353	145	113	149	183
16	161	200	1401	1391	154	113	163	198
17	180	225	1440	1439	168	113	178	216
20	200	218	1561	1598	157	102	183	181
21	240	266	1628	1673	175	102	207	210
22	282	315	1699	1748	197	102	234	239
30	200	218	1876	1675	159	118	208	210
31	240	267	1958	1768	190	118	242	246
32	280	315	2046	1859	222	118	271	282
35	200	218	2000	2089	181	141	232	233
36	240	267	2094	2195	218	141	266	273
37	280	315	2193	2300	249	141	301	314
40	324	370	2675	2745	254	127	338	365
41	364	417	2757	2839	286	127	368	400
42	400	463	2832	2932	313	127	396	433
45	324	370	2881	3001	290	150	372	403
46	364	417	2976	3107	327	150	407	442
47	400	463	3060	3213	358	150	438	481
50	431	509	3181	3304	340	181	435	483
51	485	556	3293	3397	381	181	477	518
52	519	602	3364	3484	408	181	502	552
55	431	509	3428	3619	395	222	481	536
56	485	556	3555	3725	426	222	527	575
57	519	602	3635	3825	446	222	557	613
60	557	648	3751	3758	426	190	546	601
61	599	695	3838	3847	444	190	578	636
62	633	741	3908	3935	462	190	604	669
65	557	648	4056	4174	462	231	605	668
66	599	695	4155	4276	481	231	641	707
67	633	741	4235	4376	494	231	671	745
70	644	781	5622	5959	553	354	848	791
71	726	870	5814	6153	608	354	919	867
72	790	956	5965	6335	653	354	974	937
75	644	781	6028	6445	619	420	927	885
76	726	870	6259	6667	683	420	1009	971
77	790	956	6421	6875	737	420	1072	1052
80	829	990	7326	7141	680	327	1080	1000
81	901	1080	7496	7336	735	327	1143	1075
82	976	1170	7673	7531	785	327	1208	1150
85	829	990	7844	7710	766	390	1183	1118
86	901	1080	8037	7933	825	390	1254	1205
87	976	1170	8240	8156	880	390	1329	1291

NOTES:
1. Cooler data: based on a cooler with standard wall tubing, 2-pass, 150 psig, nozzle-in-head waterbox with victaulic grooves. Weight includes suction elbow, control panel, and distribution piping. Weight does not include compressor.
2. Condenser data: based on a condenser with standard wall tubing, 2-pass, 1034 kPa, nozzle-in-head waterbox with victaulic grooves. Weight includes the float valve, discharge elbow, and distribution piping. Weight does not include unit-mounted starter, isolation valves, and pumpout unit.

Table 11 — 19XR Additional Data for Marine Waterboxes*

HEAT EXCHANGER FRAME, PASS	ENGLISH			SI		
	Psig	Rigging Weight (lb)	Water Volume (gal)	kPa	Rigging Weight (kg)	Water Volume (L)
FRAME 2, 1 AND 2 PASS	150	730	84	1034	331	318
FRAME 2, 2 PASS	150	365	42	1034	166	159
FRAME 3, 1 AND 2 PASS	150	730	84	1034	331	317
FRAME 3, 2 PASS	150	365	42	1034	166	159
FRAME 4, 1 AND 3 PASS	150	1060	123	1034	481	465
FRAME 4, 2 PASS	150	530	61	1034	240	231
FRAME 5, 1 AND 3 PASS	150	1240	139	1034	562	526
FRAME 5, 2 PASS	150	620	69	1034	281	263
FRAME 6, 1 AND 3 PASS	150	1500	162	1034	680	612
FRAME 6, 2 PASS	150	750	81	1034	340	306
FRAME 7, 1 AND 3 PASS	150	2010	326	1034	912	1234
FRAME 7, 2 PASS	150	740	163	1034	336	617
FRAME 8, 1 AND 3 PASS	150	1855	406	1034	841	1537
FRAME 8, 2 PASS	150	585	203	1034	265	768
FRAME 2, 1 AND 3 PASS	300	860	84	2068	390	318
FRAME 2, 2 PASS	300	430	42	2068	195	159
FRAME 3, 1 AND 3 PASS	300	860	84	2068	390	317
FRAME 3, 2 PASS	300	430	42	2068	195	159
FRAME 4, 1 AND 3 PASS	300	1210	123	2068	549	465
FRAME 4, 2 PASS	300	600	61	2068	272	231
FRAME 5, 1 AND 3 PASS	300	1380	139	2068	626	526
FRAME 5, 2 PASS	300	690	69	2068	313	263
FRAME 6, 1 AND 3 PASS	300	1650	162	2068	748	612
FRAME 6, 2 PASS	300	825	81	2068	374	306
FRAME 7, 1 AND 3 PASS	300	3100	326	2068	1406	1234
FRAME 7, 2 PASS	300	1830	163	2068	830	617
FRAME 8, 1 AND 3 PASS	300	2745	405	2068	1245	1533
FRAME 8, 2 PASS	300	1475	203	2068	766	768

*Add to heat exchanger data for total weights or volumes.

NOTES:
1. Weight adder shown is the same for cooler and condenser of equal frame size.
2. For the total weight of a vessel with a marine waterbox, add these values to the heat exchanger weights (or volumes).

Table 12 — Compressor Weights

COMPONENT	FRAME 2 COMPRESSOR WEIGHT		FRAME 3 COMPRESSOR WEIGHT		FRAME 4 COMPRESSOR WEIGHT		FRAME 5 COMPRESSOR WEIGHT	
	lb	kg	lb	kg	lb	kg	lb	kg
SUCTION ELBOW	50	23	54	24	175	79	400	181
DISCHARGE ELBOW	60	27	46	21	157	71	325	147
TRANSMISSION*	320	145	730	331	656	298	1000	454
SUCTION HOUSING	300	136	350	159	446	202	1200	544
IMPELLER SHROUD	35	16	80	36	126	57	250	113
COMPRESSOR BASE	1260	571	1050	476	1589	721	3695	1676
DIFFUSER	35	16	70	32	130	59	300	136
OIL PUMP	125	57	150	68	150	68	185	84
MISCELLANEOUS	100	45	135	61	144	65	220	100
TOTAL WEIGHT (Less Motor and Elbows)	2300	1043	2660	1207	3712	1684	6850	3107

*Transmission weight does not include rotor, shaft, and gear.

Table 13 — 19XR Motor Weights Standard and High Efficiency Motors

MOTOR SIZE	ENGLISH					SI				
	Stator Weight* (lb)		Rotor Weight† (lb)		End Bell Cover (lb)	Stator Weight* (kg)		Rotor Weight† (kg)		End Bell Cover (kg)
	60 Hz	50 Hz	60 Hz	50 Hz		60 Hz	50 Hz	60 Hz	50 Hz	
BD	1030	1030	240	240	185	467	467	109	109	84
BE	1070	1070	250	250	185	485	485	113	113	84
BF	1120	1120	265	265	185	508	508	120	120	84
BG	1175	1175	290	290	185	533	533	132	132	84
BH	1175	1175	290	290	185	533	533	132	132	84
CD	1286	1358	258	273	274	583	616	117	124	125
CE	1305	1377	265	281	274	592	625	120	127	125
CL	1324	1435	280	296	274	600	651	127	134	125
CM	1347	1455	303	303	274	611	660	137	137	125
CN	1358	1467	316	316	274	616	665	143	143	125
CP	1401	1479	329	316	274	635	671	149	143	125
CQ	1455	1479	329	316	274	660	671	149	152	125
DB	1665	1725	361	391	236	755	782	164	177	107
DC	1681	1737	391	404	236	762	788	177	183	107
DD	1977	2069	536	596	318	897	938	243	248	144
DE	2018	2089	550	550	318	915	948	249	248	144
DF	2100	2139	575	567	318	952	970	261	257	144
DG	2187	2153	599	599	318	992	977	272	272	144
DH	2203	2207	604	604	318	999	1001	274	274	144
DJ	2228	2305	614	614	318	1011	1046	279	279	144
EH	3060	3120	701	751	414	1388	1415	318	341	188
EJ	3105	3250	716	751	414	1408	1474	325	341	188
EK	3180	3250	716	768	414	1442	1474	325	348	188
EL	3180	3370	737	801	414	1442	1529	334	363	188
EM	3270	3370	737	801	414	1483	1529	334	363	188
EN	3270	3520	801	851	414	1483	1597	363	386	188
EP	3340	3520	830	851	414	1515	1597	376	386	188

*Stator weight includes stator and shell.
†Rotor weight includes rotor and shaft.

NOTE: When different voltage motors have different weights the largest weight is given.

Table 14A — 19XR Waterbox Cover Weights — English (lb)

HEAT EXCHANGER	WATERBOX DESCRIPTION	FRAME 1		FRAME 2		FRAME 3	
		Standard Nozzles	Flanged	Standard Nozzles	Flanged	Standard Nozzles	Flanged
COOLER/ CONDENSER	NIH, 1 Pass Cover, 150 psig	177	204	320	350	320	350
	NIH, 2 Pass Cover, 150 psig	185	218	320	350	320	350
	NIH, 3 Pass Cover, 150 psig	180	196	310	340	310	340
	NIH/MWB End Cover, 150 psig	136	136	300	300	300	300
	NIH, 1 Pass Cover, 300 psig	248	301	411	486	411	486
	NIH, 2 Pass Cover, 300 psig	255	324	411	518	411	518
	NIH, 3 Pass Cover, 300 psig	253	288	433	468	433	468
	NIH/MWB End Cover, 300 psig	175	175	400	400	400	400

HEAT EXCHANGER	WATERBOX DESCRIPTION	FRAME 4		FRAME 5		FRAME 6	
		Standard Nozzles	Flanged	Standard Nozzles	Flanged	Standard Nozzles	Flanged
COOLER/ CONDENSER	NIH, 1 Pass Cover, 150 psig	485	521	616	652	802	838
	NIH, 2 Pass Cover, 150 psig	487	540	590	663	770	843
	NIH, 3 Pass Cover, 150 psig	504	520	629	655	817	843
	NIH/MWB End Cover, 150 psig	379	379	428	428	583	583
	NIH, 1 Pass Cover, 300 psig	593	668	764	839	880	956
	NIH, 2 Pass Cover, 300 psig	594	700	761	878	844	995
	NIH, 3 Pass Cover, 300 psig	621	656	795	838	901	952
	NIH/MWB End Cover, 300 psig	569	569	713	713	833	833

HEAT EXCHANGER	WATERBOX DESCRIPTION	FRAME 7 COOLER		FRAME 7 CONDENSER	
		Standard Nozzles	Flanged	Standard Nozzles	Flanged
COOLER/ CONDENSER	NIH, 1 Pass Cover, 150 psig	1392	1469	1205	1282
	NIH, 2 Pass Cover, 150 psig	1345	1461	1163	1279
	NIH, 3 Pass Cover, 150 psig	1434	1471	1222	1280
	NIH/MWB End Cover, 150 psig	1022	1022	920	920
	NIH, 1 Pass Cover, 300 psig	1985	2150	1690	1851
	NIH, 2 Pass Cover, 300 psig	1934	2174	1628	1862
	NIH, 3 Pass Cover, 300 psig	2009	2090	1714	1831
	NIH/MWB End Cover, 300 psig	1567	1567	1440	1440

HEAT EXCHANGER	WATERBOX DESCRIPTION	FRAME 8 COOLER		FRAME 8 CONDENSER	
		Standard Nozzles	Flanged	Standard Nozzles	Flanged
COOLER/ CONDENSER	NIH, 1 Pass Cover, 150 psig	1831	1909	1682	1760
	NIH, 2 Pass Cover, 150 psig	1739	1893	1589	1744
	NIH, 3 Pass Cover, 150 psig	1851	1909	1702	1761
	NIH/MWB End Cover, 150 psig	1480	1480	1228	1228
	NIH, 1 Pass Cover, 300 psig	2690	2854	2394	2549
	NIH, 2 Pass Cover, 300 psig	2595	2924	2269	2578
	NIH, 3 Pass Cover, 300 psig	2698	2861	2417	2529
	NIH/MWB End Cover, 300 psig	1923	1923	1767	1767

LEGEND

NIH — Nozzle-in-Head
MWB — Marine Waterbox

NOTE: Weight for NIH 2-Pass Cover, 150 psig is included in the heat exchanger weights shown in Tables 10A and 10B.

Table 14B — 19XR Waterbox Cover Weights — SI (kg)

HEAT EXCHANGER	WATERBOX DESCRIPTION	FRAME 1		FRAME 2		FRAME 3	
		Standard Nozzles	Flanged	Standard Nozzles	Flanged	Standard Nozzles	Flanged
COOLER/ CONDENSER	NIH, 1 Pass Cover, 1034 kPa	80	93	145	159	145	159
	NIH, 2 Pass Cover, 1034 kPa	84	99	145	159	145	159
	NIH, 3 Pass Cover, 1034 kPa	82	89	141	154	141	154
	NIH/MWB End Cover, 1034 kPa	62	62	136	136	136	136
	NIH, 1 Pass Cover, 2068 kPa	112	137	186	220	186	220
	NIH, 2 Pass Cover, 2068 kPa	116	147	186	235	186	235
	NIH, 3 Pass Cover, 2068 kPa	115	131	196	212	196	212
	NIH/MWB End Cover, 2068 kPa	79	79	181	181	181	181

HEAT EXCHANGER	WATERBOX DESCRIPTION	FRAME 4		FRAME 5		FRAME 6	
		Standard Nozzles	Flanged	Standard Nozzles	Flanged	Standard Nozzles	Flanged
COOLER/ CONDENSER	NIH, 1 Pass Cover, 1034 kPa	220	263	279	296	364	380
	NIH, 2 Pass Cover, 1034 kPa	221	245	268	301	349	382
	NIH, 3 Pass Cover, 1034 kPa	229	239	285	297	371	382
	NIH/MWB End Cover, 1034 kPa	172	172	194	194	264	264
	NIH, 1 Pass Cover, 2068 kPa	269	303	347	381	399	434
	NIH, 2 Pass Cover, 2068 kPa	269	318	345	398	383	451
	NIH, 3 Pass Cover, 2068 kPa	282	298	361	380	409	432
	NIH/MWB End Cover, 2068 kPa	258	258	323	323	378	378

HEAT EXCHANGER	WATERBOX DESCRIPTION	FRAME 7 COOLER		FRAME 7 CONDENSER	
		Standard Nozzles	Flanged	Standard Nozzles	Flanged
COOLER/ CONDENSER	NIH, 1 Pass Cover, 1034 kPa	631	666	547	581
	NIH, 2 Pass Cover, 1034 kPa	610	663	528	580
	NIH, 3 Pass Cover, 1034 kPa	650	667	554	580
	NIH/MWB End Cover, 1034 kPa	464	464	417	417
	NIH, 1 Pass Cover, 2068 kPa	900	975	767	839
	NIH, 2 Pass Cover, 2068 kPa	877	986	738	845
	NIH, 3 Pass Cover, 2068 kPa	911	948	777	831
	NIH/MWB End Cover, 2068 kPa	711	711	653	653

HEAT EXCHANGER	WATERBOX DESCRIPTION	FRAME 8 COOLER		FRAME 8 CONDENSER	
		Standard Nozzles	Flanged	Standard Nozzles	Flanged
COOLER/ CONDENSER	NIH, 1 Pass Cover, 1034 kPa	830	866	763	798
	NIH, 2 Pass Cover, 1034 kPa	789	859	721	791
	NIH, 3 Pass Cover, 1034 kPa	840	866	772	799
	NIH/MWB End Cover, 1034 kPa	671	671	557	557
	NIH, 1 Pass Cover, 2068 kPa	1220	1295	1085	1156
	NIH, 2 Pass Cover, 2068 kPa	1177	1326	1029	1169
	NIH, 3 Pass Cover, 2068 kPa	1224	1298	1096	1147
	NIH/MWB End Cover, 2068 kPa	872	872	801	801

LEGEND

NIH — Nozzle-in-Head
MWB — Marine Waterbox

NOTE: Weight for NIH 2-Pass Cover, 1034 kPa is included in the heat exchanger weights shown in Tables 10A and 10B.

Table 15 — Optional Pumpout System Electrical Data

MOTOR CODE	CONDENSER UNIT	VOLTS-PH-Hz	MAX RLA	LRA
1	19EA47-748	575-3-60	3.8	23.0
4	19EA42-748	200/208-3-60	10.9	63.5
5	19EA44-748	230-3-60	9.5	57.5
6	19EA46-748	400/460-3-50/60	4.7	28.8

LEGEND

LRA — Locked Rotor Amps
RLA — Rated Load Amps

Table 16 — Additional Miscellaneous Weights

ITEM	Lb	Kg
CONTROL CABINET	30	14
UNIT-MOUNTED STARTER	500	227
OPTIONAL ISOLATION VALVES	115	52

Table 17 — Motor Voltage Code

MOTOR VOLTAGE CODE		
Code	**Volts**	**Frequency**
60	200	60
61	230	60
62	380	60
63	416	60
64	460	60
65	575	60
66	2400	60
67	3300	60
68	4160	60
69	6900	60
50	230	50
51	346	50
52	400	50
53	3000	50
54	3300	50
55	6300	50

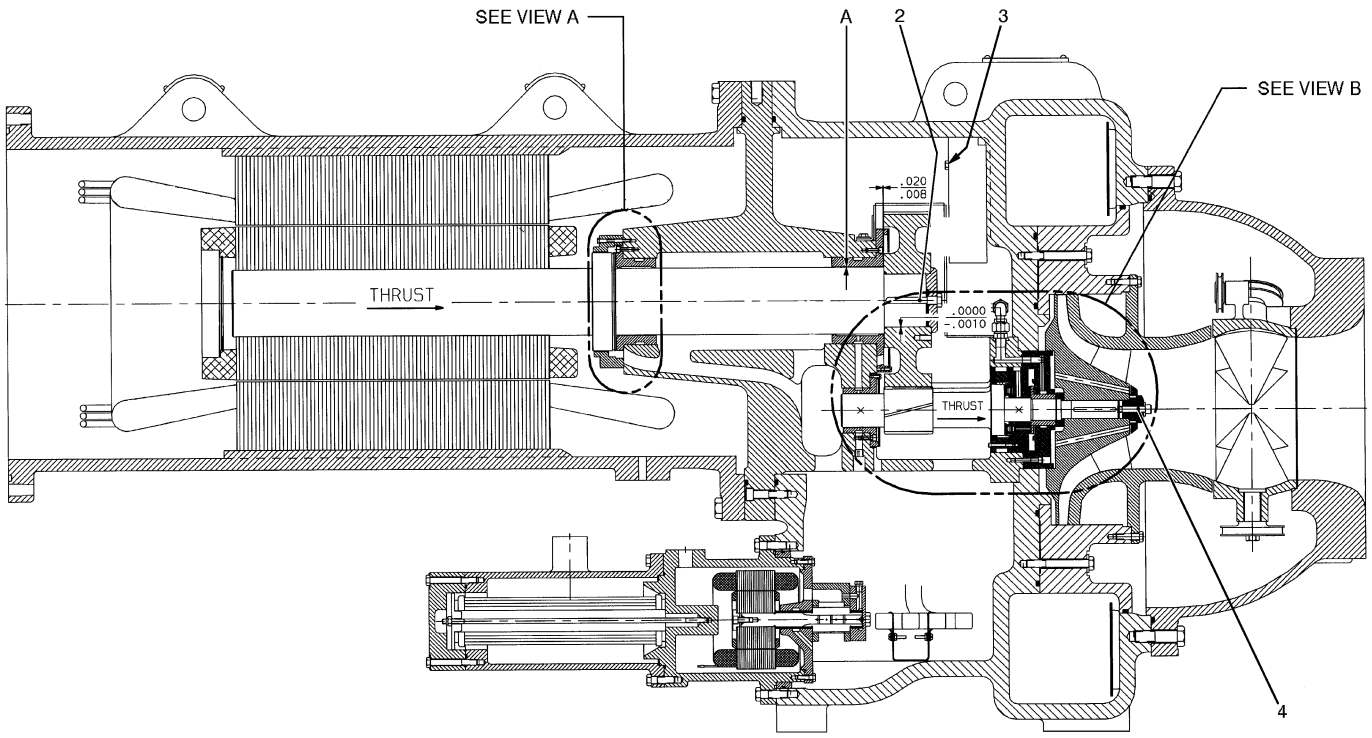

COMPRESSOR, TRANSMISSION AREA

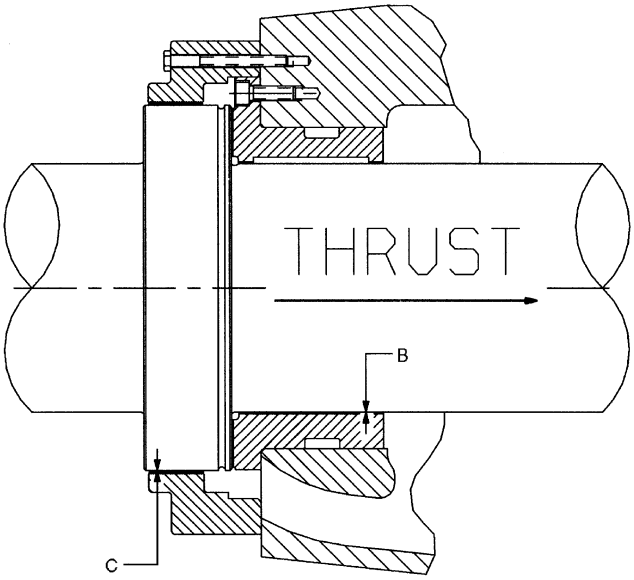

VIEW A
LOW SPEED SHAFT THRUST DISK

Compressor Assembly Torques

ITEM	DESCRIPTION	TORQUE	
		ft-lb	N·m
1*	Oil Heater Retaining Nut	20	28
2	Bull Gear Retaining Bolt	80-85	108-115
3	Demister Bolts	15-19	20-26
4	Impeller Retaining Bolt	44-46	60-62
5*	Motor Terminals (Low Voltage)	50	68
6*	Guide Vane Shaft Seal Nut	25	34
7*	Motor Terminals (High Voltage)		
	— Insulator	2-4	2.7-5.4
	— Packing Nut	5	6.8
	— Brass Jam Nut	10	13.6

LEGEND

N·m — Newton meters

*Not shown.

NOTES:
1. All clearances for cylindrical surfaces are diametrical.
2. Dimensions are with rotor in thrust position.
3. Dimensions shown are in inches.
4. Impeller spacing should be performed in accordance with most recent Carrier Service Bulletin on impeller spacing.

Fig. 40 — Compressor Fits and Clearances

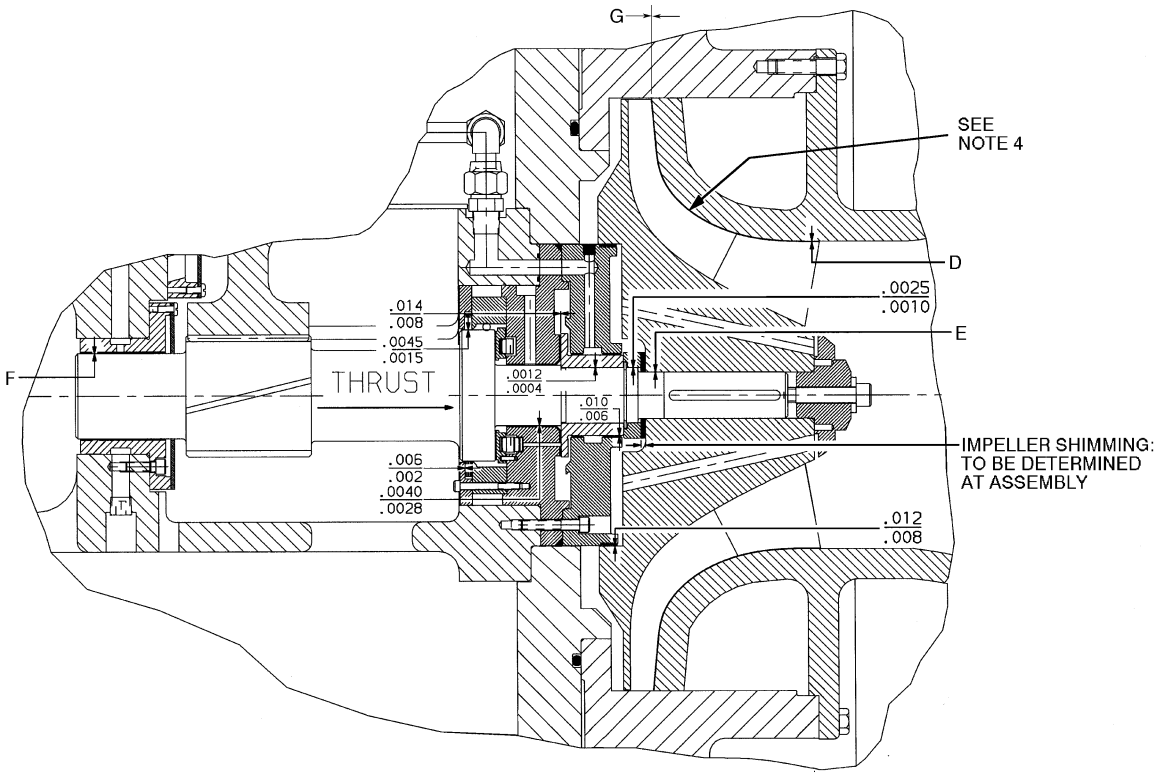

VIEW B − HIGH SPEED SHAFT

19XR COMPRESSOR CLEARANCES

ITEM	COMPRESSOR CODE			
	221-299	321-389	421-489	521-599
A	.0050 / .0040	.0050 / .0040	.0055 / .0043	.0069 / .0059
B	.0050 / .0040	.0050 / .0040	.0053 / .0043	.0065 / .0055
C	.0115 / .0055	.0115 / .0080	.0100 / .0050	.0010 / .0060
D	.0190 / .0040	.022 / .012	.027 / .017	.0350 / .0250
E	− .002 / − .0005	− .0020 / − .0005	− .0029 / − .0014	− .0019 / − .0005
F	.0050 / .0040	.0050 / .0040	.0048 / .0038	.0062 / .0052
G	.157 / .0257	.157 / .0257	.0340 / .0240	.0530 / .0430

NOTE: All clearances for cylindrical surfaces are diametrical.

Fig. 40 — Compressor Fits and Clearances (cont)

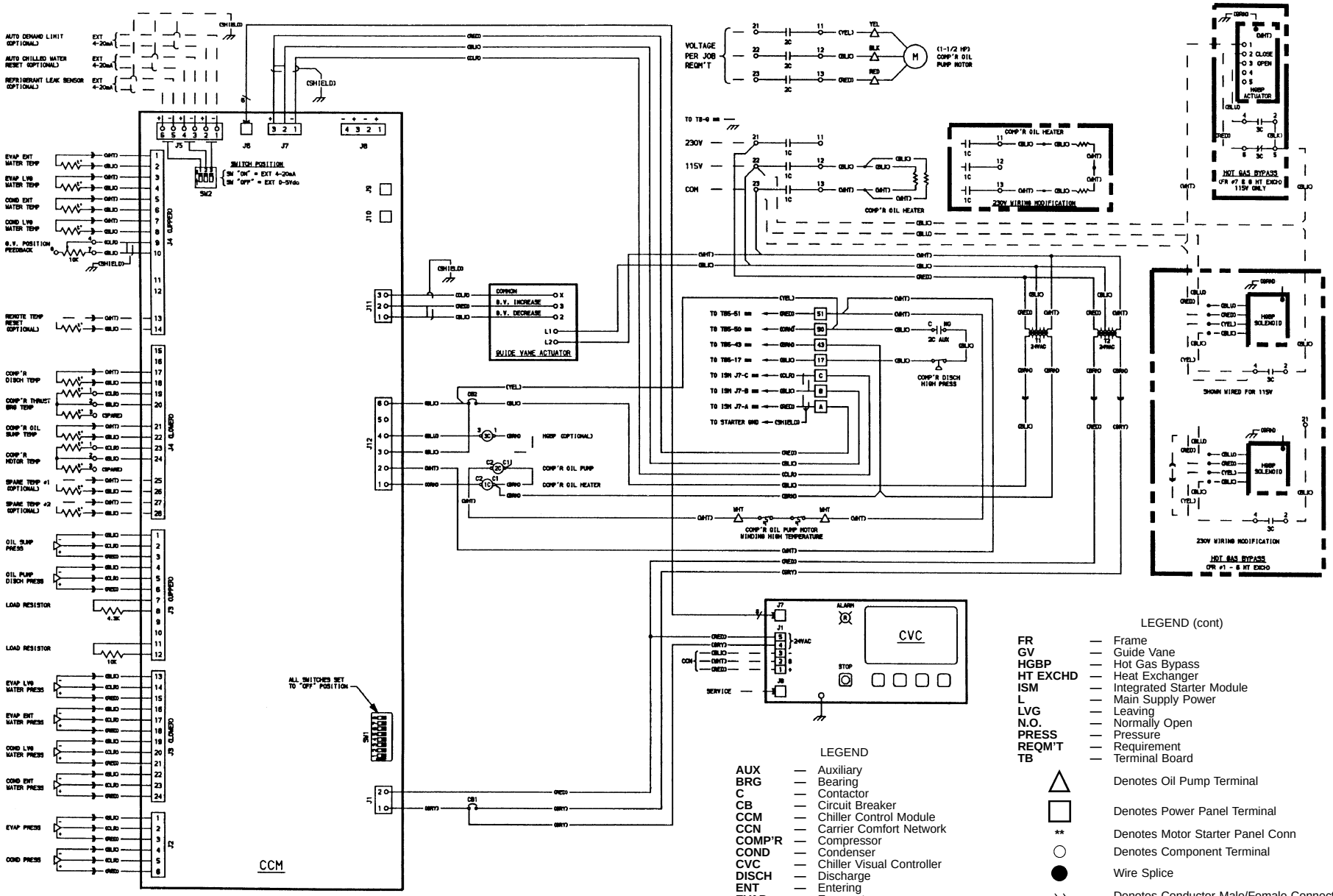

Fig. 41 — Electronic PIC II Control Panel Wiring Schematic (Frame 2, 3, 4 Compressor)

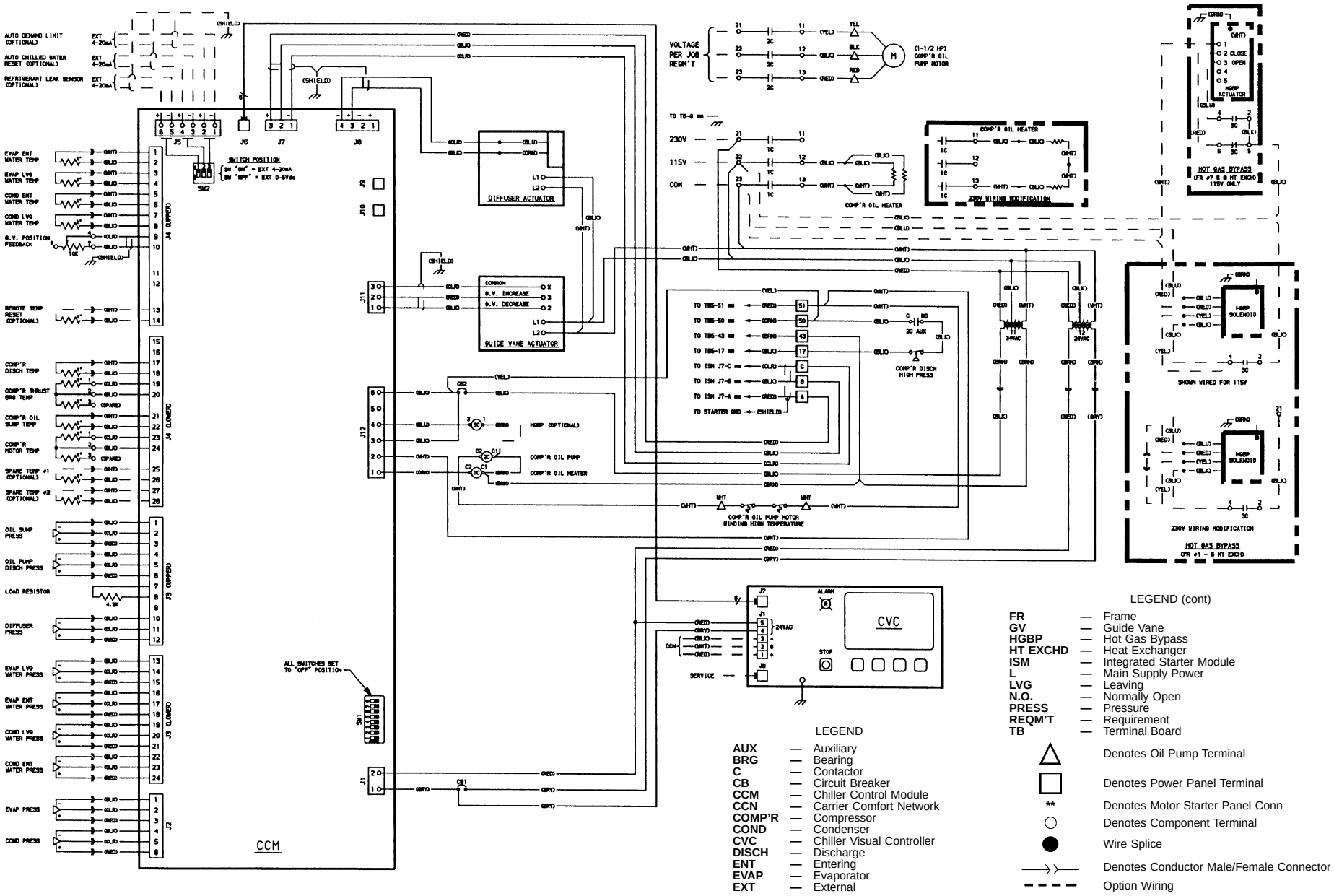

LEGEND

AUX	—	Auxiliary
BRG	—	Bearing
C	—	Contactor
CB	—	Circuit Breaker
CCM	—	Chiller Control Module
CCN	—	Carrier Comfort Network
COMP'R	—	Compressor
COND	—	Condenser
CVC	—	Chiller Visual Controller
DISCH	—	Discharge
ENT	—	Entering
EVAP	—	Evaporator
EXT	—	External

LEGEND (cont)

FR	—	Frame
GV	—	Guide Vane
HGBP	—	Hot Gas Bypass
HT EXCHD	—	Heat Exchanger
ISM	—	Integrated Starter Module
L	—	Main Supply Power
LVG	—	Leaving
N.O.	—	Normally Open
PRESS	—	Pressure
REQM'T	—	Requirement
TB	—	Terminal Board

△ Denotes Oil Pump Terminal

□ Denotes Power Panel Terminal

** Denotes Motor Starter Panel Conn

○ Denotes Component Terminal

● Wire Splice

Denotes Conductor Male/Female Connector

Option Wiring

Fig. 42 — Electronic PIC II Control Panel Wiring Schematic (Frame 5 Compressor)

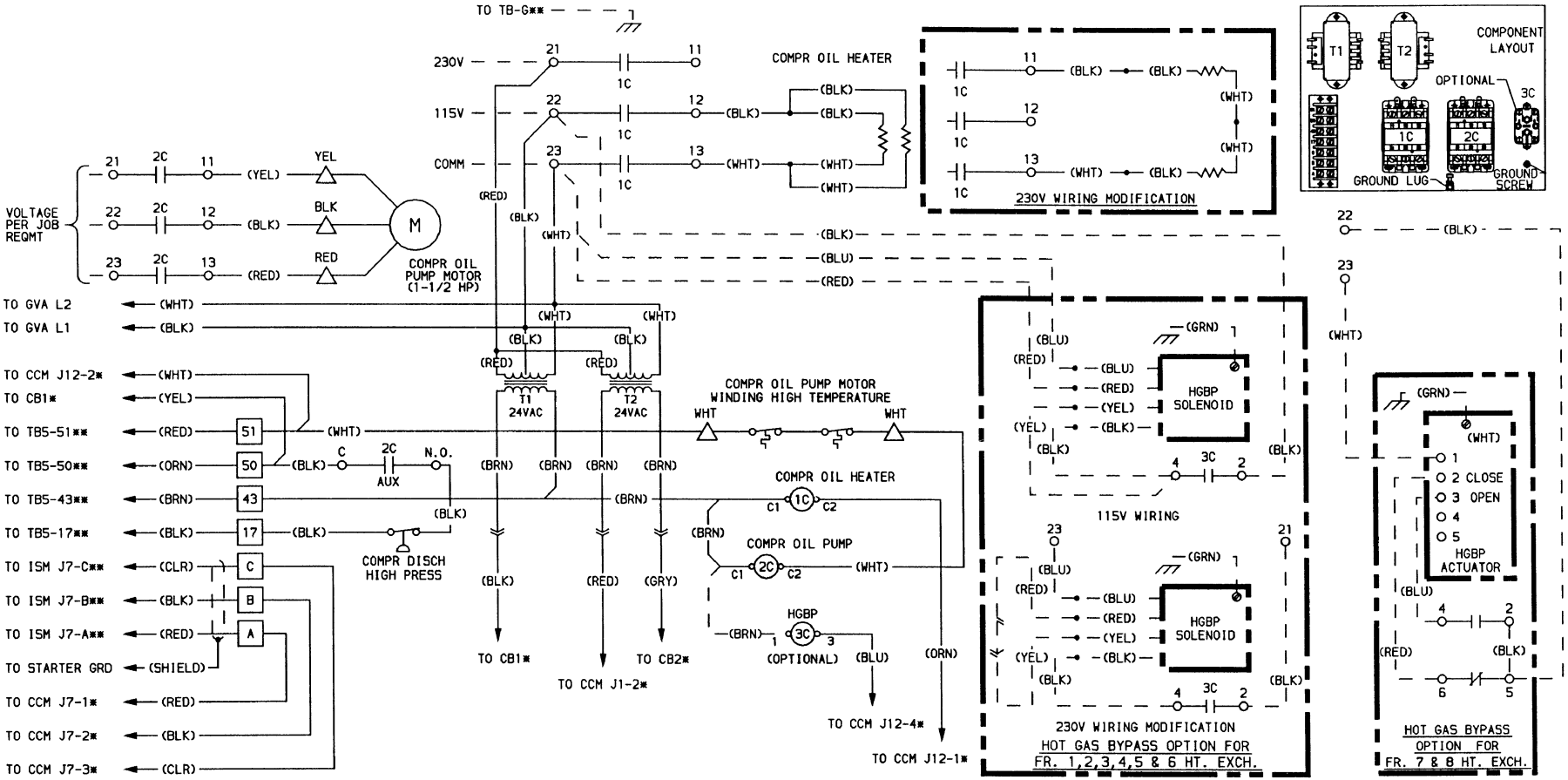

LEGEND

AUX	—	Auxiliary
C	—	Contactor
CB	—	Circuit Breaker
CCM	—	Chiller Control Module
COMM	—	Communication
COMPR	—	Compressor
DISCH	—	Discharge
FR	—	Frame
G	—	Ground
GRD	—	Ground
GVA	—	Guide Vane Actuator
HGBP	—	Hot Gas Bypass
HT EXCHD	—	Heat Exchanger
ISM	—	Integrated Starter Module
L	—	Main Power Supply
N.O.	—	Normally Open
PRESS	—	Pressure
REQMT	—	Requirement

T	—	Transformer
TB	—	Terminal Board
△		Denotes Oil Pump Terminal
□		Denotes Power Panel Terminal
*		Denotes Mach. Control Panel Conn.
**		Denotes Motor Starter Panel Conn.
○		Denotes Component Terminal
●		Wire Splice
—⟩⟨—		Denotes Conductor Male/Female Connector
- - - -		Option Wiring

Fig. 43 — Power Panel Wiring Schematic

NOTE: Power factor correction capacitors (when required) are connected ahead of all current transformers for proper calibration and sensing by the ISM and IQDP4130.

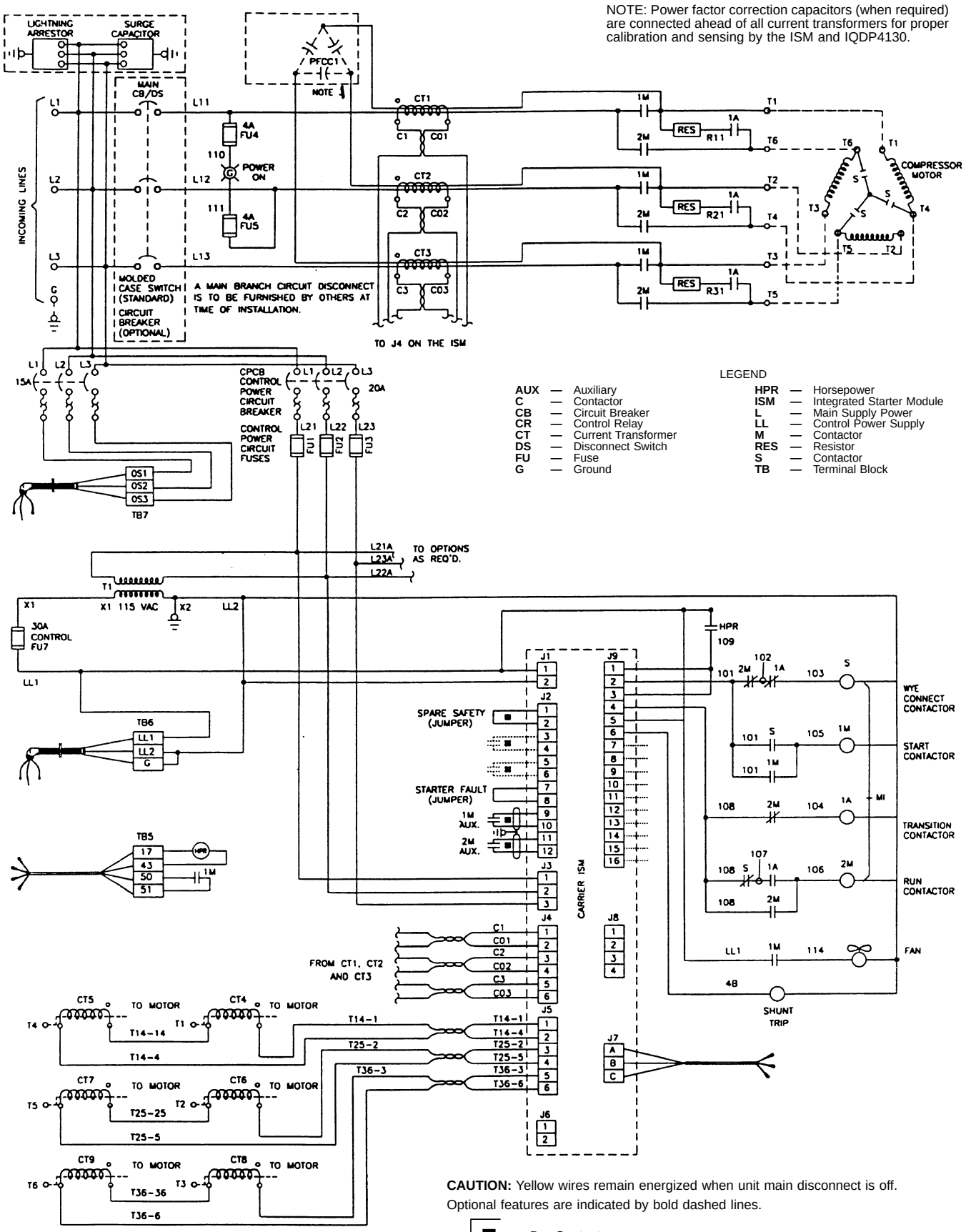

LEGEND

AUX	— Auxiliary	**HPR**	— Horsepower
C	— Contactor	**ISM**	— Integrated Starter Module
CB	— Circuit Breaker	**L**	— Main Supply Power
CR	— Control Relay	**LL**	— Control Power Supply
CT	— Current Transformer	**M**	— Contactor
DS	— Disconnect Switch	**RES**	— Resistor
FU	— Fuse	**S**	— Contactor
G	— Ground	**TB**	— Terminal Block

CAUTION: Yellow wires remain energized when unit main disconnect is off.

Optional features are indicated by bold dashed lines.

Dry Contact

Field Connection

For connection diagram refer to 261143 D4.

Fig. 44 — Cutler-Hammer Wye Delta Unit Mounted Starter Wiring Schematic (Low Voltage)

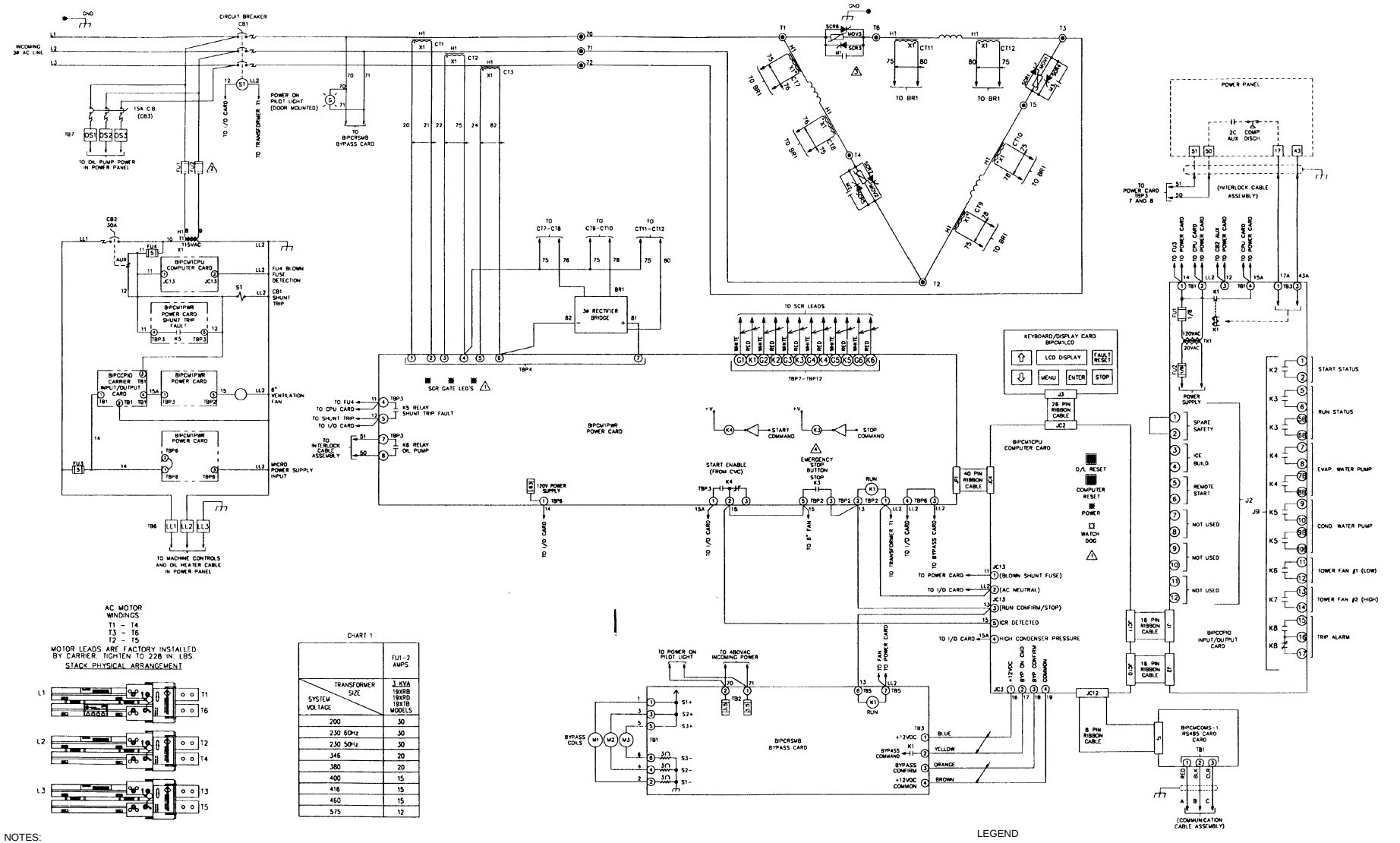

CHART 1

SYSTEM VOLTAGE \ TRANSFORMER SIZE	FU1-2 AMPS 3 KVA 19XRB 19XRD 19XTB MODELS
200	30
230 60Hz	30
230 50Hz	30
346	20
380	20
400	15
416	15
460	15
575	12

NOTES:

1. LED status with power applied and prior to run command. ● "ON" ○ "OFF"
2. Transformer T1 primary fuses FU1/FU2 value dependent on system voltage and model, per Chart 1. Transformer connections per transformer nameplate connection diagram.
3. MOVs are used on power stack assemblies for system voltages of 200 thru 460 vac (as shown). Resistor/capacitor networks (DVDTs) are used on power stack assemblies in place of MOVs for a system voltage of 575 vac (not shown).
4. K3 relay shown in deenergized state. K3 contact will close when power is applied. K3 contact will open on stop command or system fault.

LEGEND

AUX	— Auxiliary	**G**	— Ground
BR	— Bridge Rectifier	**L**	— Main Supply Power
CB	— Circuit Breaker	**LL**	— Control Power Supply
COMM	— Communication	**M**	— Contactor
COND	— Condenser	**O/L**	— Overload Reset
CPU	— Central Processing Unit	**S**	— Contactor
CVC	— Chiler Visual Controller	**SCR**	— Silicone Controller Rectifier
CT	— Current Transformer	**ST**	— Shunt Trip
EVAP	— Evaporator	**TB**	— Terminal Block
FU	— Fuse		

Wire Node Symbol may have terminal block
Benshaw supplied terminal block
Terminal Strip
Power Connection
PC Board Terminals
Twisted Pair
Twisted Shielded Pair
Shield Wire
Field Wiring

Fig. 45 — Benshaw, Inc. Solid-State Unit Mounted Starter Wiring Schematic (Low Voltage)

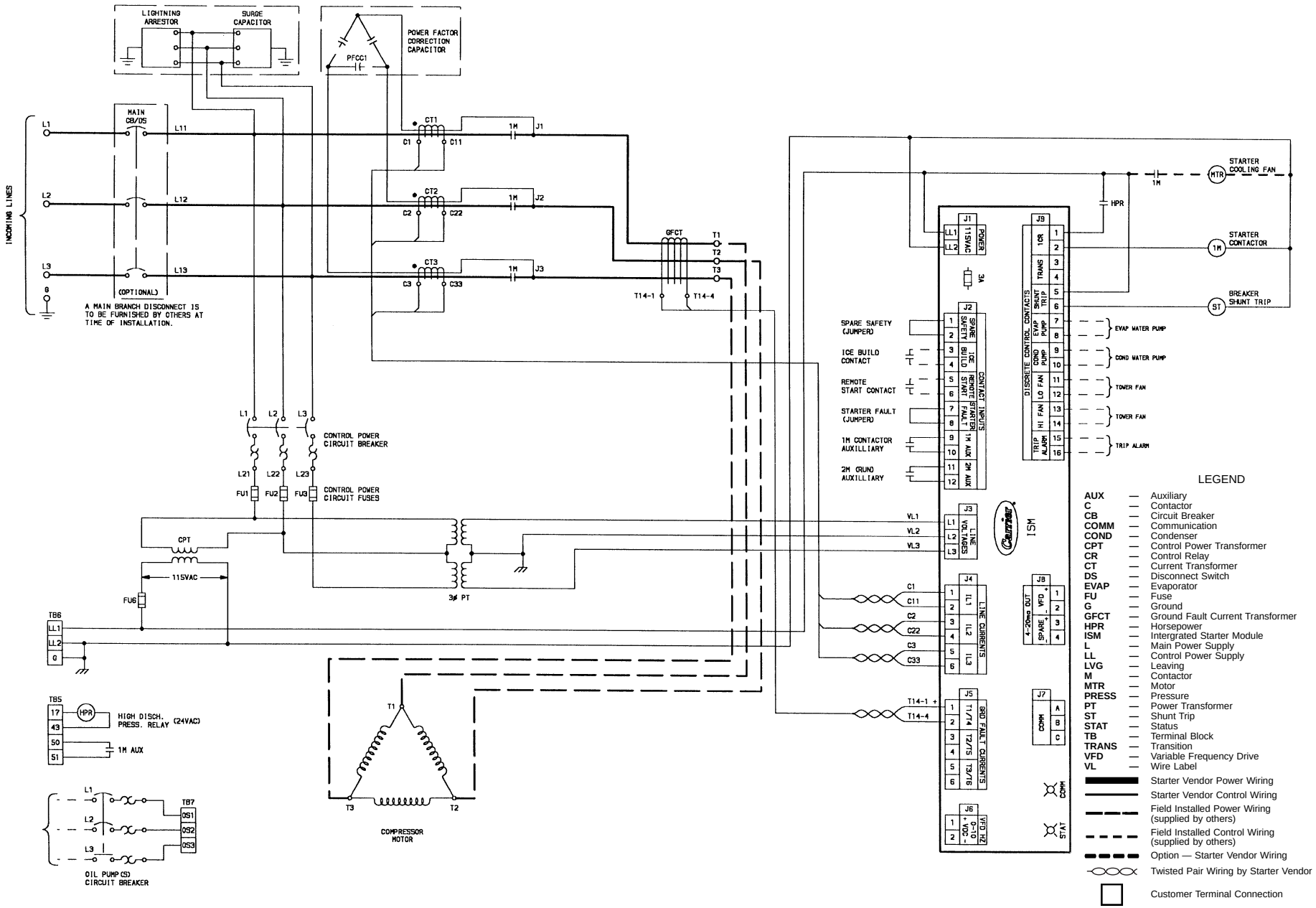

Fig. 46 — Typical Across-the-Line Starter Wiring Schematic (Medium Voltage)

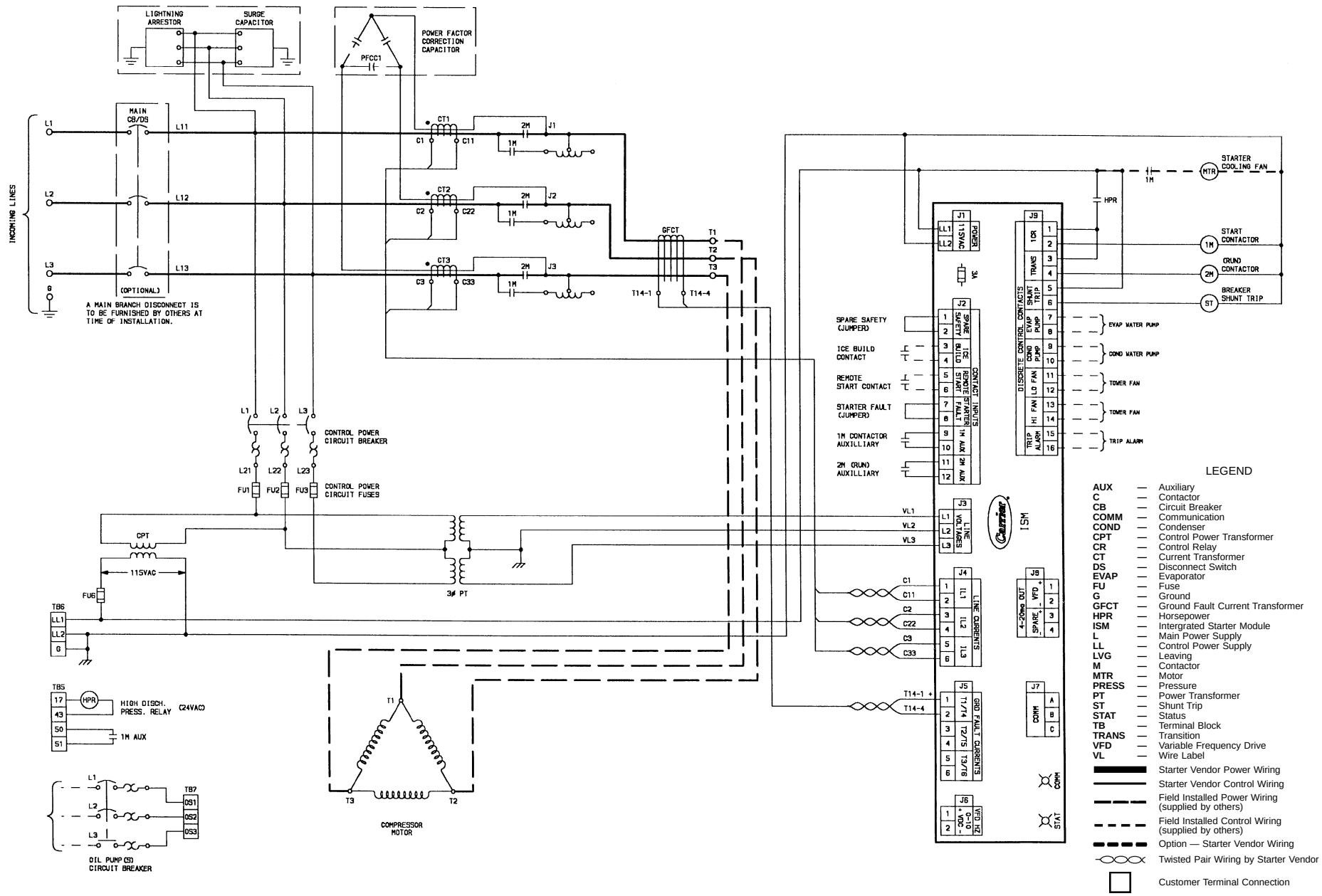

Fig. 47 — Typical Primary Reactor Starter Wiring Schematic (Medium Voltage)

INDEX

Abbreviations and Explanations, 4
Adding Refrigerant, 65
Adjusting the Refrigerant Charge, 65
After Extended Shutdown, 60
After Limited Shutdown, 60
Attach to Network Device Control, 42
Automatic Soft Stop Amps Threshold, 45
Auto. Restart After Power Failure, 37
Before Initial Start-Up, 46
Capacity Override, 35
Carrier Comfort Network Interface, 52
Changing Oil Filter, 66
Charge Refrigerant Into Chiller, 56
Chilled Water Recycle Mode, 44
Chiller Control Module (CCM), 81
Chiller Dehydration, 51
Chiller Familiarization, 5
Chiller Information Plate, 5
Chiller Operating Condition (Check), 59
Chiller Tightness (Check), 46
Chillers with Isolation Valves, 64
Chillers with Storage Tanks, 63
Cold Weather Operation, 60
Compressor Bearing and Gear Maintenance, 67
Condenser, 5
Condenser Freeze Prevention, 37
Condenser Pump Control, 36
Control Algorithms Checkout Procedure, 70
Control Panel, 5
Control Modules, 80
Control Test, 71
Controls, 10
CVC Operation and Menus, 14
Cooler, 5
Default Screen Freeze, 35
Definitions (Controls), 10
Demand Limit Control Option, 38
Design Set Points, (Input), 53
Details (Lubrication Cycle), 8
Display Messages (Check), 69
Dry Run to Test Start-Up Sequence, 58
Equipment Required, 46
Extended Shutdown (Preparation for), 60
Factory-Mounted Starter, 7
General (Controls), 10
General Maintenance, 65
Guide Vane Linkage (Check), 65
Heat Exchanger Tubes and Flow Devices (Inspect), 68
High Altitude Locations, 56
High Discharge Temperature Control, 35
Ice Build Control, 41
Initial Start-Up, 58
Initial Start-Up Checklist for 19XR Hermetic Centrifugal Liquid Chiller, CL-1
Inspect the Control Panel, 66
Instruct the Customer Operator, 59
Integrated Starter Module (ISM), 81
Introduction, 4
Job Data Required, 46
Lead/Lag Control, 39
Leak Rate, 65
Leak Test Chiller, 48
Local Occupied Schedule (Input), 53
Local Start-Up, 44
Lubrication Cycle, 8
Lubrication System (Check), 66
Manual Guide Vane Operation, 60
Motor and Oil Refrigeration Cooling Cycle, 7
Motor-Compressor, 5
Motor Rotation (Check), 58
Notes on Module Operation, 80
Oil Changes, 67
Oil Charge, 53
Oil Cooler, 36
Oil Pressure and Compressor Stop (Check), 59
Oil Reclaim Filter, 67
Oil Reclaim System, 8
Oil Specification, 67
Oil Sump Temperature Control, 35
Open Oil Circuit Valves, 46
Operating Instructions, 59
Operating the Optional Pumpout Unit, 62
Operator Duties, 59
Optional Pumpout Compressor Water Piping (Check), 51
Optional Pumpout System Controls and Compressor (Check), 56
Optional Pumpout System Maintenance, 68
Ordering Replacement Chiller Parts, 69
Overview (Troubleshooting Guide), 69
Perform a Controls Test, 56
Physical Data, 84
PIC II System Components, 10
PIC II System Functions, 32
Power Up the Controls and Check the Oil Heater, 53
Preparation (Initial Start-Up), 58
Preparation (Pumpout and Refrigerant Transfer Procedures), 62
Prepare the Chiller for Start-Up, 59
Pressure Transducers (Check), 68, 70
Prevent Accidential Start-Up, 59
Pumpout and Refrigerant Transfer Procedures, 62
Ramp Loading, 35
Refrigerant Filter, 67
Refrigerant Float System (Inpsect), 67
Refrigerant Leak Detector, 36
Refrigerant Leak Testing, 65
Refrigerant Properties, 65
Refrigerant (Removing), 65
Refrigerant Tracer, 46
Refrigeration Cycle, 7
Refrigeration Log, 60
Relief Valves (Check), 51
Relief Valves and Piping (Inspect), 67
Remote Start/Stop Controls, 36
Repair the Leak, Retest, and Apply Standing Vacuum Test, 65
Replacing Defective Processor Modules, 81
Running System (Check), 59
Safety and Operating Controls (Check Monthly), 66
Safety Considerations, 1
Safety Controls, 33
Safety Shutdown, 45
Scheduled Maintenance, 66
Service Configurations (Input), 53
Service Ontime, 66
Service Operation, 43
Shipping Packaging (Remove), 46
Shunt Trip (Option), 35
Shutdown Sequence, 45
Software Configuration, 53
Solid-State Starters, 81
Spare Safety Alarm Contacts, 36
Spare Safety Inputs, 36
Standing Vacuum Test, 48
Starter (Check), 52
Starting Equipment, 8
Starting Equipment (Inspect), 68
Start-Up/Shutdown/Recycle Sequence, 44
Start the Chiller, 59
Stop the Chiller, 60

INDEX (cont)

Storage Vessel, 7
Summary (Lubrication Cycle), 8
Surge Prevention Algorithm, 38
Surge Protection, 39
System Components, 5
Temperature Sensors (Check), 69
Test After Service, Repair, or Major Leak, 65
Tighten All Gasketed Joints and Guide Vane Packing, 46
Tower Fan Relay Low and High, 37
Trim Refrigerant Charge, 65
Troubleshooting Guide, 69
Unit Mounted Solid-State Starter, 9
Unit Mounted Wye-Delta Starter, 10
Using the Optional Storage Tank and Pumpout System, 46
Water/Brine Reset, 37
Water Leaks, 68
Water Piping (Inspect), 51
Water Treatment, 68
Weekly Maintenance, 66
Wiring (Inspect), 51

Copyright 1998 Carrier Corporation

CUT ALONG DOTTED LINE

INITIAL START-UP CHECKLIST FOR 19XR HERMETIC CENTRIFUGAL LIQUID CHILLER
(Remove and use for job file.)

MACHINE INFORMATION:

NAME _____ JOB NO. _____

ADDRESS _____ MODEL _____

CITY _____ STATE _____ ZIP _____ S/N _____

DESIGN CONDITIONS:

	TONS	BRINE	FLOW RATE	TEMPERATURE IN	TEMPERATURE OUT	PRESSURE DROP	PASS	SUCTION TEMPERATURE	CONDENSER TEMPERATURE
COOLER									******
CONDENSER								******	

COMPRESSOR: Volts _____ RLA _____ OLTA _____

STARTER: Mfg _____ Type _____ S/N _____

OIL PUMP: Volts _____ RLA _____ OLTA _____

CONTROL/OIL HEATER: Volts ☐ 115 ☐ 230

REFRIGERANT: Type: _____ Charge _____

CARRIER OBLIGATIONS:

Assemble . . . . . Yes ☐ No ☐
Leak Test . . . . . Yes ☐ No ☐
Dehydrate . . . . . Yes ☐ No ☐
Charging . . . . . Yes ☐ No ☐
Operating Instructions _____ Hrs.

START-UP TO BE PERFORMED IN ACCORDANCE WITH APPROPRIATE MACHINE START-UP INSTRUCTIONS

JOB DATA REQUIRED:

1. Machine Installation Instructions . . . . . Yes ☐ No ☐
2. Machine Assembly, Wiring and Piping Diagrams . . . . . Yes ☐ No ☐
3. Starting Equipment Details and Wiring Diagrams . . . . . Yes ☐ No ☐
4. Applicable Design Data (see above) . . . . . Yes ☐ No ☐
5. Diagrams and Instructions for Special Controls . . . . . Yes ☐ No ☐

INITIAL MACHINE PRESSURE: _____

	YES	NO
Was Machine Tight?		
If Not, Were Leaks Corrected?		
Was Machine Dehydrated After Repairs?		

CHECK OIL LEVEL AND RECORD:

Top sight glass

Bottom sight glass

ADD OIL: Yes ☐ No ☐

Amount: _____

RECORD PRESSURE DROPS: Cooler _____ Condenser _____

CHARGE REFRIGERANT: Initial Charge _____ Final Charge After Trim _____

CUT ALONG DOTTED LINE

Manufacturer reserves the right to discontinue, or change at any time, specifications or designs without notice and without incurring obligations.

INSPECT WIRING AND RECORD ELECTRICAL DATA:

RATINGS:

Motor Voltage _____ Motor(s) Amps _____ Oil Pump Voltage _____ Starter LRA Rating _____

Line Voltages: Motor _____ Oil Pump _____ Controls/Oil Heater _____

FIELD-INSTALLED STARTERS ONLY:

Check continuity T1 to T1, etc. (Motor to starter, disconnect motor leads T4, T5, T6.) Do not megger solid-state starters, disconnect leads to motor and megger the leads.

MEGGER MOTOR	"PHASE TO PHASE"			"PHASE TO GROUND"		
	T1-T2	T1-T3	T2-T3	T1-G	T2-G	T3-G
10-Second Readings:						
60-Second Readings:						
Polarization Ratio:						

STARTER: Electro-Mechanical ☐ Solid-State ☐ Manufacturer _____

Serial Number _____

Motor Load Current Transformer Ratio _____ : _____

Solid-State Overloads Yes ☐ No ☐

CONTROLS: SAFETY, OPERATING, ETC.

Perform Controls Test (Yes/No) _____

PIC II CAUTION

COMPRESSOR MOTOR AND CONTROL PANEL **MUST** BE PROPERLY AND INDIVIDUALLY CONNECTED BACK TO THE EARTH GROUND IN THE STARTER (IN ACCORDANCE WITH CERTIFIED DRAWINGS).

Yes _____

RUN MACHINE: Do these safeties shut down machine?

Condenser Water Flow	Yes ☐	No ☐
Chilled Water Flow	Yes ☐	No ☐
Pump Interlocks	Yes ☐	No ☐

INITIAL START:

Line Up All Valves in Accordance With Instruction Manual: _____ Start Water Pumps and Establish Water Flow _____

Oil Level OK and Oil Temperature OK _____ Check Oil Pump Rotation-Pressure _____

Check Compressor Motor Rotation (Motor End Sight Glass) and Record: Clockwise _____

Restart Compressor, Bring Up To Speed. Shut Down. Any Abnormal Coastdown Noise? Yes* ☐ No ☐

*If yes, determine cause.

START MACHINE AND OPERATE. COMPLETE THE FOLLOWING:

A: Trim Charge and Record Under Charge Refrigerant Section on page 56.
B: Complete Any Remaining Control Calibration and Record Under Controls Section (pages 10-43).
C: Take At Least 2 Sets of Operational Log Readings and Record.
E: After Machine Has Been Successfully Run and Set Up, Shut Down and Mark Shutdown Oil and Refrigerant Levels.
F: Give Operating Instructions to Owner's Operating Personnel. Hours Given: _____ Hours
G: Call your Carrier factory representative to report chiller start-up.

SIGNATURES:

CARRIER TECHNICIAN _____

DATE _____

CUSTOMER REPRESENTATIVE _____

DATE _____

19XR PIC II SETPOINT TABLE CONFIGURATION SHEET

DESCRIPTION	RANGE	UNITS	DEFAULT	VALUE
Base Demand Limit	40 to 100	%	100	
LCW Setpoint	10 to 120	DEG F	50.0	
ECW Setpoint	15 to 120	DEG F	60.0	
Ice Build Setpoint	15 to 60	DEG F	40.0	
Tower Fan High Setpoint	55 to 105	DEG F	75	

CVC Software Version Number: _____

CVC Controller Identification: BUS: _____ ADDRESS: _____

CUT ALONG DOTTED LINE

CUT ALONG DOTTED LINE

Carrier COMFORT NETWORK

19XR PIC II TIME SCHEDULE CONFIGURATION SHEET OCCPC01S

	Day Flag									Occupied					Unoccupied			
	M	T	W	T	F	S	S	H		Time					Time			
Period 1:																		
Period 2:																		
Period 3:																		
Period 4:																		
Period 5:																		
Period 6:																		
Period 7:																		
Period 8:																		

NOTE: Default setting is OCCUPIED 24 hours/day.

ICE BUILD 19XR PIC II TIME SCHEDULE CONFIGURATION SHEET OCCPC02S

	Day Flag									Occupied					Unoccupied			
	M	T	W	T	F	S	S	H		Time					Time			
Period 1:																		
Period 2:																		
Period 3:																		
Period 4:																		
Period 5:																		
Period 6:																		
Period 7:																		
Period 8:																		

NOTE: Default setting is UNOCCUPIED 24 hours/day.

19XR PIC II TIME SCHEDULE CONFIGURATION SHEET OCCPC03S

	Day Flag									Occupied					Unoccupied			
	M	T	W	T	F	S	S	H		Time					Time			
Period 1:																		
Period 2:																		
Period 3:																		
Period 4:																		
Period 5:																		
Period 6:																		
Period 7:																		
Period 8:																		

NOTE: Default setting is OCCUPIED 24 hours/day.

CUT ALONG DOTTED LINE

CUT ALONG DOTTED LINE

19XR PIC II ISM_CONF TABLE CONFIGURATION SHEET

DESCRIPTION	RANGE	UNITS	DEFAULT	VALUE
Starter Type (0=Full, 1=Red, 2=SS/VFD)	0 to 2		1	
Motor Rated Line Voltage	200 to 13200	VOLTS	460	
Volt Transformer Ratio: 1	1 to 33		1	
Overvoltage Threshold	105 to 115	%	115	
Undervoltage Threshold	85 to 95	%	85	
Over/Under Volt Time	1 to 10	SEC	5	
Voltage % Imbalance	1 to 10	%	5	
Voltage Imbalance Time	1 to 10	SEC	5	
Motor Rated Load Amps	10 to 5000	AMPS	200	
Motor Locked Rotor Trip	100 to 60000	AMPS	1000	
Locked Rotor Start Delay	1 to 10	cycles	5	
Starter LRA Rating	100 to 60000	AMPS	2000	
Motor Current CT Ratio: 1	10 to 1000		100	
Current % Imbalance	5 to 40	%	15	
Current Imbalance Time	1 to 10	SEC	5	
3 Grnd Fault CT's? (1=No)	0/1	NO/YES	YES	
Ground Fault CT Ratio: 1	150		150	
Ground Fault Current	1 to 25	AMPS	15	
Ground Fault Start Delay	1 to 20	cycles	10	
Ground Fault Persistence	1 to 10	cycles	5	
Single Cycle Dropout	0/1	DSABLE/ENABLE	DSABLE	
Frequency-60 Hz? (No=50)	0/1	NO/YES	YES	
Line Frequency Faulting	0/1	DSABLE/ENABLE	DSABLE	

19XR PIC II OPTIONS TABLE CONFIGURATION SHEET

DESCRIPTION	RANGE	UNITS	DEFAULT	VALUE
Auto Restart Option	0/1	DSABLE/ENABLE	DSABLE	
Remote Contacts Option	0/1	DSABLE/ENABLE	DSABLE	
Soft Stop Amps Threshold	40 to 100	%	100	
Surge/Hot Gas Bypass				
Surge Limit/HGBP Option Select: Surge=0, HGBP=1	0/1		0	
Min. Load Point (T1/P1)				
Surge/HGBP Delta T1	0.5 to 15	^F	1.5	
Surge/HGBP Delta P1	30 to 170	PSI	50	
Full Load Point (T2/P2)				
Surge/HGBP Delta T2	0.5 to 15	^F	10	
Surge/HGBP Delta P2	50 to 170	PSI	85	
Surge/HGBP Deadband	0.5 to 3	^F	1	
Surge Protection				
Surge Delta % Amps	5 to 15	%	10	
Surge Time Period	7 to 10	MIN	8	
Ice Build Control				
Ice Build Option	0/1	DSABLE/ENABLE	DSABLE	
Ice Build Termination 0=Temp, 1=Contacts,2=Both	0 to 2		0	
Ice Build Recycle	0/1	DSABLE/ENABLE	DSABLE	
Refrigerant Leak Option	0/1	DSABLE/ENABLE	DSABLE	
Refrigerant Leak Alarm mA	4 to 20	mA	20	

Carrier COMFORT NETWORK

19XR PIC II SETUP1 TABLE CONFIGURATION SHEET

DESCRIPTION	RANGE	UNITS	DEFAULT	VALUE
Comp Motor Temp Override	150 to 200	DEG F	200	
Cond Press Override	90 to 165	PSI	125	
Comp Discharge Alert	125 to 200	DEG F	200	
Comp Thrust Brg Alert	165 to 185	DEG F	175	
Chilled Medium	0/1	WATER/BRINE	WATER	
Chilled Water Deadband	.5 to 2.0	^F	1.0	
Evap Refrig Trippoint	0.0 to 40.0	DEG F	33	
Refrig Override Delta T	2.0 to 5.0	^F	3	
Condenser Freeze Point	−20 to 35	DEG F	34	
Evap Flow Delta P Cutout	0.5 to 50.0	PSI	5.0	
Cond Flow Delta P Cutout	0.5 to 50.0	PSI	5.0	
Water Flow Verify Time	0.5 to 5	MIN	5	
Oil Press Verify Time	15 to 300	SEC	40	
Recycle Control				
Recycle Restart Delta T	2.0 to 10.0	DEG F	5	
Recycle Shutdown Delta	0.t to 4.0	DEG F	1	
SPARE ALERT/ALARM ENABLE Disable=0, Lo=1/3, Hi=2/4				
Spare Temp #1 Enable	0 to 4		0	
Spare Temp #1 Limit	−40 to 245	DEG F	245	
Spare Temp #2 Enable	0 to 4		0	
Spare Temp #2 Limit	−40 to 245	DEG F	245	

CUT ALONG DOTTED LINE

CUT ALONG DOTTED LINE

19XR PIC II SETUP2 TABLE CONFIGURATION SHEET

DESCRIPTION	STATUS	UNITS	DEFAULT	VALUE
Capacity Control				
Proportional Inc Band	2 to 10		6.5	
Proportional Dec Band	2 to 10		6.0	
Proportional ECW Gain	1 to 3		2.0	
Guide Vane Travel Limit	30 to 100	%	80	
Diffuser Control				
Diffuser Option	0 to 1	DSABLE/ENABLE	DSABLE	
Guide Vane 25% Load Pt	0 to 78	%	25	
Diffuser 25% Load Pt	0 to 100	%	0	
Guide Vane 50% Load Pt	0 to 78	%	50	
Diffuser 50% Load Pt	0 to 100	%	0	
Guide Vane 75% Load Pt	0 to 78	%	75	
Diffuser 75% Load Pt	0 to 100	%	0	
Diffuser Full Span mA	15 to 22	mA	18	
VFD Speed Control				
VFD Option	0/1	DSABLE/ENABLE	DSABLE	
VFD Gain	0.1 to 1.5		0.75	
VFD Increase Step	1 to 5	%	2	
VFD Minimum Speed	65 to 100	%	70	
VFD Maximum Speed	90 to 110	%	100	

Carrier COMFORT NETWORK

19XR PIC II LEADLAG TABLE CONFIGURATION SHEET

DESDRIPTION	RANGE	UNITS	DEFAULT	VALUE
Lead Lag Control				
LEAD/LAG Configuration DSABLE=0, LEAD=1, LAG=2, STANDBY=3	0 to 3		0	
Load Balance Option	0/1	DSABLE/ENABLE	DSABLE	
Common Sensor Option	0/1	DSABLE/ENABLE	DSABLE	
LAG Percent Capacity	25 to 75	%	50	
LAG Address	1 to 236		92	
LAG START Timer	2 to 60	MIN	10	
LAG STOP Timer	2 to 60	MIN	10	
PRESTART FAULT Timer	2 to 30	MIN	5	
STANDBY Chiller Option	0/1	DSABLE/ENABLE	DSABLE	
STANDBY Percent Capacity	25 to 75	%	50	
STANDBY Address	1 to 236		93	

CUT ALONG DOTTED LINE

CUT ALONG DOTTED LINE

19XR PIC II RAMP_DEM TABLE CONFIGURATION SHEET

DESCRIPTION	RANGE	UNITS	DEFAULT	VALUE
Pulldown Ramp Type: Select: Temp=0, Load=1	0/1		1	
Demand Limit + kW Ramp				
Demand Limit Source Select: Amps=0, kW=1	0/1		0	
Motor Load Ramp % Min	5 to 20		10	
Demand Limit Prop Band	3 to 15	%	10	
Demand Limit At 20 mA	40 to 100	%	40	
20 mA Demand Limit Opt	0/1	DSABLE/ENABLE	DSABLE	
Motor Rated Kilowatts	50 to 9999	kW	156	
Demand Watts Interval	5 to 60	MIN	15	

19XR PIC II TEMP_CTL TABLE CONFIGURAITON SHEET

DESCRIPTION	RANGE	UNITS	DEFAULT	VALUE
Control Point				
ECW Control Option	0/1	DSABLE/ENABLE	DSABLE	
Temp Pulldown Deg/Min	2 to 10	^F	3	
Temperature Reset				
RESET TYPE 1				
Degrees Reset At 20 mA	−30 to 30	^F	10	
RESET TYPE 2				
Remote Temp (No Reset)	−40 to 245	DEG F	85	
Remote Temp (Full Reset)	−40 to 245	DEG F	65	
Degrees Reset	−30 to 30	^F	10	
RESET TYPE 3				
CHW Delta T (No Reset)	0 to 15	^F	10	
CHW Delta T (Full Reset)	0 to 15	^F	0	
Degrees Reset	−30 to 30	^F	5	
Select/Enable Reset Type	0 to 3		0	

Carrier COMFORT NETWORK

BROADCAST (BRODEF) CONFIGURATION SHEET

DESCRIPTION	RANGE	UNITS	DEFAULT	VALUE
Time Broadcast Enable	DISABLE/ENABLE		DSABLE	
Daylight Savings				
Start Month	1 to 12		4	
Start Day of Week	1 to 7		7	
Start Week	1 to 5		3	
Start Time	00:00 to 24:00	HH:MM	02:00	
Start Advance	0 to 360	MIN	60	
Stop Month	1 to 12		10	
Stop Day of Week	1 to 7		7	
Stop Week	1 to 5		3	
Stop Time	00:00 to 24:00		02:00	
Stop Back	0 to 360	MIN	60	

CUT ALONG DOTTED LINE

CUT ALONG DOTTED LINE

Copyright 1998 Carrier Corporation