45J,M,K,N,Q,R Standard, Quiet, and Low Profile Fan-Powered Terminal Units for Variable Air Volume (VAV) Systems

Application Data

CONTENTS

Page

SAFETY CONSIDERATIONS 1
GENERAL 1,2
MAJOR SYSTEM COMPONENTS 2-4
Single-Duct Fan-Powered Terminal Unit 2
Zone Controller 2
Optional Relay Board 2
Bypass Controller 2
System Pilot™ Interface 2
Supply Air Temperature (SAT) Sensor 2
Primary Air Temperature (PAT) Sensor 3
Space Temperature (SPT) Sensor 3
Space Humidity Sensor 3
Air Quality Sensors 3
BACnet SPT Sensors 3
Linear Averaging Flow Probe 3
Factory-Mounted Controls 3
CONTROLS 4-10
Pressure Independent VAV Controls (45JC,JD,MC, MD,KC,KD,NC,ND,QC,QD,RC,RD) 4
- DESCRIPTION AND SPECIFICATIONS
- SEQUENCE DESCRIPTION AND IDENTIFICATION
- SYSTEM OPERATION

Pressure Dependent VVT® Controls (45MB,MV,NB,NV,RB,RV) 5
- DESCRIPTION AND SPECIFICATIONS
- SEQUENCE DESCRIPTION AND IDENTIFICATION
- SYSTEM OPERATION

Analog Electronic Controls (45JA,MA, KA,NA,QA,RA) 7
- DESCRIPTION AND SPECIFICATIONS
- CONTROL PACKAGE OFFERINGS AND IDENTIFICATION
- WATER VALVE SPECIFICATIONS
- CONTROLLER COMPONENTS AND WIRING

Pneumatic Controls (45JP,MP, KP,NP,QP,RP) 9
- DESCRIPTION AND SPECIFICATIONS
- CONTROLLER COMPONENTS AND WIRING

Field-Supplied Direct Digital Controls or No Controls (45JN,MN,KN,NN,QN,RN) 9
- DESCRIPTION AND SPECIFICATIONS
- CONTROL PACKAGE OFFERINGS AND IDENTIFICATION

APPLICATION DATA 10
Airflow Range 10
System Pressure 10
Acoustics 10
APPENDIX A — PRESSURE INDEPENDENT CCN VAV CONTROLS (45JC,MC,KC,NC,QC,RC) 11-52
APPENDIX B — PRESSURE INDEPENDENT BACnet VAV CONTROLS (45JD,MD,KD,ND,QD,RD) 53-92
APPENDIX C — PRESSURE DEPENDENT CCN VVT ELECTRONIC CONTROLS (45MV,NV,RV) 93-105
APPENDIX D — PRESSURE DEPENDENT BACnet VVT ELECTRONIC CONTROLS (45MB,NB,RB) 106-117
APPENDIX E — ANALOG ELECTRONIC CONTROLS (45JA,MA,KA,NA,QA,RA) 118-148
APPENDIX F — PNEUMATIC CONTROLS (45JP,MP,KP,NP,QP,RP) 149-172

SAFETY CONSIDERATIONS

SAFETY NOTE

Air-handling equipment will provide safe and reliable service when operated within design specifications. The equipment should be operated and serviced only by authorized personnel who have a thorough knowledge of system operation, safety devices and emergency procedures.

Good judgment should be used in applying any manufacturer's instructions to avoid injury to personnel or damage to equipment and property.

⚠ WARNING

Disconnect all power to the unit before performing maintenance or service. Unit may automatically start if power is not disconnected. Electrical shock and personal injury could result.

⚠ CAUTION

If it is necessary to remove and dispose of mercury contactors in electric heat section, follow all local, state, and federal laws regarding disposal of equipment containing hazardous materials.

GENERAL

Carrier's standard 45J series and 45M parallel fan-powered variable air volume (VAV) terminal units are among the most versatile fan powered products on the market today. Primarily due to the cost and simplicity of installation and application, the 45J,M units are among the most commonly used fan powered units in the HVAC (heating, ventilation, and air conditioning) industry. Using its series fan box, the 45J fan-powered units maintain optimum temperatures in conditioned zones through the accurate mixing of plenum return air and cold primary air. Carrier's 45M fan-powered VAV terminal units are designed with an intermittent parallel fan operation. The 45J,M units maintain optimum occupant comfort levels, and supply warm induced plenum air, cold primary air, or a mixture of both to condition the specific zone or space.

Carrier's quiet 45K series and 45N parallel fan-powered VAV terminal units contain a series fan box, and are designed

Manufacturer reserves the right to discontinue, or change at any time, specifications or designs without notice and without incurring obligations.

with the lowest sound levels in the industry. The units can be equipped with different unit linings to meet all indoor air quality (IAQ) designs. Allowing maximum flexibility in configuration and control, the 45K,N units contain strong integral panel/post construction allowing long lasting service access, as well as containing standard multi-voltage motors.

Carrier's low profile 45Q series and 45R parallel fan-powered VAV terminal units are designed for the height constrained consumers. The units are built at the optimum low height physical dimension of 10 $^5/_8$ in. high. The 45Q,R units maintain optimum temperatures in conditioned zones with excellent performance characteristics.

MAJOR SYSTEM COMPONENTS

Single-Duct Fan-Powered Terminal Unit (45J,M,K,N,Q,R) — The 45J,M,K,N,Q,R round tube fan powered variable air volume (VAV) unit is a small size to ensure an easy fit in all applications. All units have round inlets and outlets. All inlets have a raised collar bead to ensure tight inlet duct connections. Duct dimensions for 45 Series units are the same as Carrier 35 Series units, for easy interchangeability.

The basic unit is a short performance unit with the industry standard single-blade damper. All damper assemblies utilize a solid shaft that rotates in Delrin* bearings. Delrin damper bearings are self-lubricating and unaffected by temperature and humidity. Damper blade incorporates a flexible gasket for tight airflow shutoff and operates over a full 90 degrees. Minimal leakage assures optimum stylization of supplied airflow. The damper position is marked by an arrow embossment on the end of the damper shaft.

The units offer unit casing of 22 gage zinc galvanized steel construction with an optional of 20 gage 304-stainless steel. The unit is suitable for low-pressure, medium-pressure and high-pressure applications.

All units are equipped with a factory-installed airflow sensing device as a standard feature. The standard sensor is linear, multi-point, velocity averaging sensor with an amplified signal. Balancing taps are provided to allow for easy airflow verification. The probe offers a flow averaging capability and results in flow sensing capability equal to any competitive unit.

Non-electric heat units, with electronic controls, are available with an optional factory-supplied, mounted, and wired transformer, mounted inside the control enclosure.

Zone Controller — A zone controller is a single-duct, variable air volume (VAV) terminal control with a factory-integrated controller and actuator. The zone controller maintains precise temperature control in the space by operating the terminal fan (if supplied), regulating the flow of conditioned air into the space, and controlling the auxiliary heating (if applicable). Buildings with diverse loading conditions can be supported by controlling reheat or supplemental heat.

VAV FAN TERMINAL ZONE CONTROLLERS — A CCN VAV fan terminal controller (33CFANTRM) or BACnet VAV fan terminal controller (OPN-VAVB3) is available for single-duct terminals with up to 3 stages (CCN) or 2 stages (BACnet†) of heat or modulating heat. When the CCN VAV fan terminal zone controller is used in conjunction with a secondary terminal and the 33ZCSECTRM secondary terminal zone controller, zone pressurization applications can be supported. This is not available on the BACnet VAV controller.

Carrier's linkage system is integral in the Carrier Comfort Network® (CCN) and BACnet Open controllers for use with single duct air terminals. The single-duct terminal zone controllers can be part of the Carrier CCN or BACnet protocol systems.

*Registered trademark of DuPont.
†Sponsored by ASHRAE (American Society of Heating, Refrigerating, and Air Conditioning Engineers).

VVT® ZONE CONTROLLER — The variable volume and temperature (VVT) CCN zone controller (33ZCVVTZC-01) or VVT BACnet zone controller (OPN-VVTZC) is a component of Carrier's 3V™ system and is used to provide zone level temperature and air quality/ventilation control for variable volume and temperature applications. The VVT zone controller is a pressure dependent device that maintains space temperature by modulating the amount of supply airflow through its primary damper. Zone conditions are continuously monitored and electronically communicated to the VVT linkage coordinator.

All VVT zone controllers can be configured as the linkage coordinator, however only one is required per VVT system. The linkage coordinator is responsible for communication with the other zones, determining the required system mode and providing the proper information to the air source.

The VVT zone controller control assembly contains an integral actuator assembly that is factory mounted to the 35E terminal damper shaft, similar to the mounting of a standard actuator. The VVT zone controller operates on the 3V system network and is compatible with all CCN or BACnet communicating devices. A user interface is not required for everyday operation of the zone controller. The CCN zone controller can be configured or operated through the CCN system with optional interface tools including the System Pilot™ device or Carrier software.

Optional Relay Board — Carrier's optional relay board (33ZCOPTBRD-01) may be used with CCN VVT zone controllers to provide control functions for heat or fan air terminals. Heating capabilities include modulating heat, up to 3 stages of ducted heat or combination baseboard and ducted heat control.

Bypass Controller — The VVT bypass controller is a component of Carrier's 3V system and is used to regulate the supply duct static pressure for variable volume and temperature applications. The CCN bypass controller (33ZCBC-01) or BACnet bypass controller (OPN-VVTBP) operates on the 3V system network and is compatible with all CCN or BACnet communicating devices. A user interface is not required for everyday operation of the bypass controller.

The CCN bypass controller can be configured or operated through the CCN system with optional interface tools including the System Pilot device or Carrier software.

The BACnet bypass controller provides an Rnet port for the BACview6 handheld service tool to configure the controllers.

Both the VVT zone and bypass controllers have actuator that is rated at 35 lb-in. (3.95f N-m) torque, a 90-degree stroke, and provide a 90-second nominal time at 60 Hz. Volume control is provided by the controller/actuator for pressure dependent airflow control in response to the space temperature sensor.

System Pilot™ Interface — The System Pilot interface is component of Carrier's 3V system and serves as the user interface and configuration tool for all Carrier communicating devices. The System Pilot interface can be used to install and commission a 3V zoning system, linkage compatible air source, universal controller, and all other devices operating on the CCN system. Additionally, the System Pilot interface can serve as a wall-mounted temperature sensor for space temperature measurement. The occupant can use the System Pilot interface to change set points and cause occupancy overrides. A security feature is provided to limit access of features for unauthorized users.

Supply Air Temperature (SAT) Sensor (33ZCSENSAT) — A supply air temperature sensor is required for all ducted heating applications and stand-alone operation. The sensor is optional on cooling only applications and is used for supply air monitoring. The sensor has an operating

range of –40 to 245 F (–40 to 118 C). The sensor is factory wired to the controller and shipped in the control box. The SAT must be filled-installed in the duct downstream from the terminal.

Primary Air Temperature (PAT) Sensor (33ZCSENPAT) — The primary air temperature sensor is required on a linkage coordinator zone controller if the zone controller is not using a CCN linkage compatible air source. The sensor is used to monitor the equipment's supply-air temperature. The temperature can be broadcast to zone controllers that receive information from a linkage coordinator. The sensor has an operating range of –40 to 245 F (–40 to 118 C).

Space Temperature (SPT) Sensor — The space temperature sensor monitors room temperature changes and sends a signal to the zone controller to satisfy the amount of conditioned air that is allowed into space. Thermostats are supplied separately as a field-installed accessory and are not included in the CCN package. The choices of sensors are listed below:

- 33ZCT55SPT room temperature (RT) sensor, with override only
- 33ZCT56SPT room temperature (RT) sensor, with set point adjust and override
- 33ZCT59SPT communicating room temperature liquid crystal display (LCD) sensor with override and set point adjustment.

The 33ZCT55SPT space temperature sensor with override button is required for all applications. The 33ZCT56SPT space temperature sensor with override button and set point adjustment can be used in place of the 33ZCT55SPT space temperature sensor if local set point adjustment is required. The space temperature sensor accessory is ordered separately for field installation. The temperature sensor uses a 10 kilo-ohm thermistor to sense ambient temperature. See Table 1.

Table 1 — Thermistor Resistance vs Temperature Values for Space, Return-Air, Outside-Air, and Supply-Air Temperature Sensors

TEMP (C)	TEMP (F)	RESISTANCE (Ohms)
–40	–40	335,651
–35	–31	242,195
–30	–22	176,683
–25	–13	130,243
–20	–4	96,974
–15	5	72,895
–10	14	55,298
–5	23	42,315
0	32	32,651
5	41	25,395
10	50	19,903
15	59	15,714
20	68	12,494
25	77	10,000
30	86	8,056
35	95	6,530
40	104	5,325
45	113	4,367
50	122	3,601
55	131	2,985
60	140	2,487
65	149	2,082
70	158	1,752

The 33ZCT59SPT communicating space temperature sensor with set point adjustment is a wall-mount sensor for use with CCN system. The sensor contains a custom liquid crystal display (LCD) that indicates room temperature and set point offset. The sensor also features an override button and temperature offset adjustment provided for control of features in the device to which the sensor is connected. The wall sensor typically is used with the CCN system for temperature sensing, remote timed override, and set point bias adjustment.

Space Humidity Sensor (33ZCSENSRH-01) — The space humidity sensor measures the relative humidity of the air within the occupied space. The accessory space humidity sensor is field supplied and installed on an interior wall.

Air Quality Sensors — Three different CO_2 sensors are available for optional demand control ventilation:

- 33ZCSENCO2 indoor-air quality (IAQ) sensor is a wall-mounted sensor with an LED (light-emitting diode) display which monitors carbon dioxide levels
- 33ZCT55CO2 sensor is an indoor, wall-mounted sensor without display. The CO_2 sensor also includes a space temperature sensor with override button.
- 33ZCT56CO2 sensor is an indoor, wall-mounted sensor without display. The CO_2 sensor also includes a space temperature sensor with override button and temperature offset.

The information on carbon dioxide levels is used to increase the airflow to the zone and may also modify the position of the outdoor-air dampers to admit more outdoor air as required to provide the desired ventilation rate. The wall sensor is used to monitor the conditioned space. The sensor uses infrared technology to measure the levels of CO_2 present in the air. The CO_2 sensors are factory set for a range of 0 to 2000 ppm and a linear voltage output of 0 to 10 vdc. The sensor requires a separate field-supplied 24 vac 25 va transformer to provide power.

NOTE: The relative humidity sensor and CO_2 sensor cannot be used on the same zone controller.

BACnet SPT Sensors — Carrier's SPT space temperature sensors provide the following features and benefits:

- designed for use with the open protocol line of controllers by Carrier
- has a large LCD (liquid crystal diode) display and easy-to-use occupant controls
- provides precision measurement
- attractive low profile enclosure
- hidden communications jack provides local access to the HVAC (heating, ventilation, and air conditioning) control system for commissioning and maintenance

They are available in 3 types:

- thermostat: SPS: RT (room temperature) only.
- thermostat: SPPL: RT (room temperature) sensor, with set point adjust and override.
- thermostat: SPP: RT (room temperature) sensor, with set point adjust, override, LCD display, and zone set points.

Linear Averaging Flow Probe — Each 45 Series unit is supplied with a linear averaging flow probe as a standard feature. This probe offers a flow averaging capability and results in flow sensing capability.

Factory-Mounted Controls — The 45J,K,Q series fan-powered terminal units and 45M,N,R parallel fan-powered terminal units are offered with a wide variety of factory-mounted controls that regulate the volume of air delivery from the unit and respond to cooling and heating load requirements of the conditioned space. See Fig. 1-3.

These devices are available in both pneumatic and electronic arrangements. The CCN and BACnet, VVT® and VAV electronic controls are communicating PIC (product integrated controls) which are integrated with the building system. A number of direct digital control (DDC) packages by others are available for consignment mounting, as indicated.

The 45J,K,Q series fan-powered VAV terminal unit control offerings are identified as follows:

- 45JA,KA,QA: Analog electronic
- 45JC,KC,QC: CCN VAV electronic controls
- 45JD,KD,QD: BACnet VAV electronic controls
- 45JP,KP,QP: Pneumatic

- 45JN,KN,QN: No controls or DDC by others

The 45M,N,R parallel fan-powered VAV terminal unit control offerings are identified as follows:

- 45MA,NA,RA: Analog electronic
- 45MC,NC,RC: CCN VAV electronic controls
- 45MD,ND,RD: BACnet VAV electronic controls
- 45MP,NP,RP: Pneumatic
- 45MV,NV,RV: CCN VVT electronic controls
- 45MB,NB,RB: BACnet VVT electronic controls
- 45MN,NN,RN: No controls or DDC by others

Pneumatic control units utilize a standard linear damper actuator, which when combined with the 90-degree damper actuator, allows a simple switchover from normally open to normally closed applications without moving any components.

Non-electric heat units with electronic controls are available with an optional factory-supplied, mounted, and wired transformer, mounted inside the control enclosure.

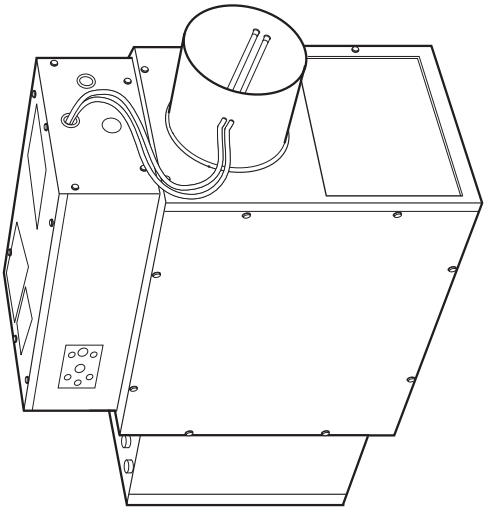

Fig. 1 — 45J,M Standard Fan Powered Terminal Unit

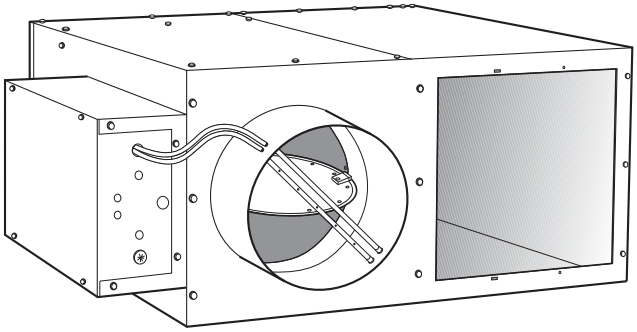

Fig. 2 — 45K,N Quiet Fan Powered Terminal Unit

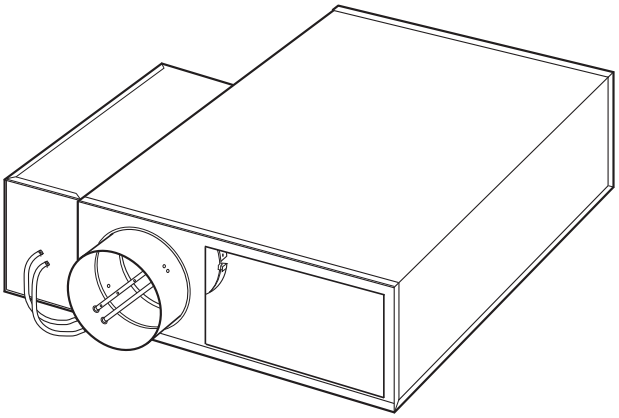

Fig. 3 — 45Q,R Low Profile Fan Powered Terminal Unit

CONTROLS

Each control approach offers a variety of operating functions and a control package number identifies combinations of control functions. The variety of function arrangements available, circuit diagrams, operating sequences and function descriptions will be described below according to each control offering. See Appendices A-F for complete control sequences.

Pressure Independent VAV Controls (45JC, JD,MC,MD,KC,KD,NC,ND,QC,QD,RC,RD)

DESCRIPTION AND SPECIFICATIONS — The pressure independent VAV controls are factory-installed in a control enclosure. Factory-mounted transformers are available as an option. Thermostats are supplied separately as a field-installed accessory. The control packages must be used in combination with a thermostat. Thermostats are not included in the package.

Pressure independent control packages are available with or without hot water (on-off or floating modulation control) or electric heat (up to 3 stages on CCN control or 2 stages on BACnet control), designed to be an integral part of the Carrier DDC system. All control arrangements include a standard linear inlet flow sensor, control enclosure, SCR (silicon-controlled rectifier) fan speed controller, transformer to 24 volts, and fan relay. Several types of room sensors may be ordered, with and without set point adjustment, and with integral CO_2 sensors.

SEQUENCE DESCRIPTION AND IDENTIFICATION — The 45 Series units are furnished with factory-installed controls for integration into the Carrier Comfort Network® system or BACnet Open protocol system. Factory-mounted transformers are available as an option. The VAV package includes:

- sheet metal control enclosure
- airflow probe and transducer
- controller/actuator
- supply air temperature sensor

Each control package is a unique combination of functions for use of the 45 Series air terminal in an air system. All VAV arrangements match the control package number and corresponding sequence description as shown in Tables 2 and 3. Wiring diagrams and operation sequence descriptions for each of these control packages are shown in Appendicies A and B.

Table 2 – 45JC, JD, KC, KD, QC, QD Control Function Identification

CONTROL PACKAGE NUMBER CCN	CONTROL PACKAGE NUMBER BACnet	SEQUENCE DESCRIPTION AND IDENTIFICATION
4440	4480	Cooling only
4442	4482	Cooling with 3-stage (CCN) or 2-stage (BACnet) electric heat
4443	4483	Cooling with on-off hot water heat
4444	4484	Cooling with proportional (floating) hot water heat
4452	—	Cooling with 3-stage (CCN) or 2-stage (BACnet) field-installed electric heat
4454	4494	Cooling with proportional solid-state relay (SSR) electric heat

Table 3 – 45MC, MD, NC, ND, RC, RD Control Function Identification

CONTROL PACKAGE NUMBER CCN	CONTROL PACKAGE NUMBER BACnet	SEQUENCE DESCRIPTION AND IDENTIFICATION
4740	4780	Cooling only
4742	4782	Cooling with 3-stage (CCN) or 2-stage (BACnet) electric heat
4743	4783	Cooling with on-off hot water heat
4744	4784	Cooling with proportional (floating) hot water heat
4752	—	Cooling with 3-stage (CCN) or 2-stage (BACnet) field-installed electric heat
4754	4794	Cooling with proportional solid-state relay (SSR) electric heat

A zone controller is factory-mounted on the 45 Series units. The zone controller monitors a differential pressure signal as airflow enters the box. This differential signal is compared to a set point to provide pressure independent control of the air passing through the terminal. The 45 Series terminals with ComfortID controls consists of a linkage coordinator (LC) and a zone controller. The linkage coordinator is remote-mounted on the control network.

SYSTEM OPERATION — When using the pressure independent VAV controls, ambient temperature can be measured and regulated using a wall sensor. The wall sensor is equipped with a push button which when pressed will override the unoccupied time schedule and cause the zone to be controlled to the occupied set points for a preconfigured period of time. This time period may be preconfigured for a period of 1 to 4 hours in one-hour increments.

Pressure Dependent VVT® Electronic Controls (45MB,MV,NB,NV,RB,RV)

DESCRIPTION AND SPECIFICATIONS — Direct digital electronic control of the fan-powered terminals can be accomplished with the variable volume and temperature (VVT) electronic controller. The 3V™ control system is a VVT zoning system for constant volume equipment. The 3V system is used to condition a space containing rooms or areas of diverse loading. One VVT zone controller may be configured to manage a group of linked zone controllers on a CCN or BACnet network. This VVT zone controller is called the linkage coordinator. See Fig. 4. The linked zone controllers may be managed by either pressure dependent or pressure independent zone controllers. When configured as a 3V linkage coordinator, the zone controller decides what zones to condition by requesting the air-conditioning equipment to provide heated or cooled air. By combining an integral damper/motor controller with other control devices, the controller provides pressure-dependent control for both heating and cooling applications. Remote communication by a field-supplied and field-installed communication bus allows for additional functions such as night setback. Controller specifications are given in Table 4.

Table 4 — Controller Specifications

SPECIFICATION	VALUE
Voltage	24 vac ± 10% at 40 va
Frequency	60 Hz
Operating Temperature (F/C)	32 to 131 F (0° to 55 C)
Wiring Requirements – Copper Only, American Wire Gage	18 to 22
Transformer Requirements	277/208/240/480-24 vac 40 va min

The basic controller/actuator is furnished and enclosed in a steel box on the side of a 45MB,MV,NB,NV,RB,RV unit. Units with electric heat include factory-installed transformers. Factory-mounted transformers are available as an option on cooling-only units and units with hot water reheat. Thermostats are supplied separately as a field-installed accessory.

Care must be taken when hot water reheat is used. Field-supplied water valves must be examined carefully to ensure that they do not exceed the power for each relay (24 vac, 1 amp).

SEQUENCE DESCRIPTION AND IDENTIFICATION — Pressure dependent control packages are available with or without hot water (on-off control), electric heat (up to 2 stages), or proportional SSR (solid-state relay) electric heat for parallel flow units only. All control arrangements include a standard linear inlet flow sensor, control enclosure, SCR fan speed controller, transformer to 24 volts, and fan relay. Field-installed thermostats are not included and must be ordered separately.

The VVT electronic controls can be furnished to perform a variety of functions. Each set of functions is assigned a control package number corresponding to its own sequence identification as shown in Table 5. Appendices C and D describe the operating sequences for the zone controller in its various configuration and modes. Each description is accompanied by figures depicting the hardware configuration and the sequence of control events for the application being described. In the control sequence diagrams the vertical axis represents airflow and the horizontal axis represents space temperature. The sequence of events for heating operation reads from left to right. See control package wiring diagrams and operation sequence descriptions in Appendices C and D.

Table 5 — 45MB,MV,NB,NV,RB,RV Control Function Identification

CONTROL PACKAGE NUMBER CCN	CONTROL PACKAGE NUMBER BACnet	SEQUENCE DESCRIPTION AND IDENTIFICATION
8815	8855	Pressure dependent, cooling only
8818	8858	Pressure dependent, cooling with on-off hot water reheat
8819	8859	Pressure dependent, cooling with 3-stage (CCN) or 2-stage (BACnet) electric heat
8820	8860	Pressure dependent, cooling with modulating hot water reheat
8825	8865	Pressure dependent, cooling with combination baseboard and duct electric heat
8829	—	Pressure dependent, cooling with 1 to 3 stage (CCN) or 2-stage (BACnet) field-installed electric heat
8830	8870	Pressure dependent, cooling with Proportional SSR (solid-state relay) electric heat

NOTE: Field-installed VVT components such as thermostats must be ordered separately.

SYSTEM OPERATION — The VVT zone controllers are either a CCN or BACnet communicating device that conforms to standard CCN or BACnet communications protocol. The zone controller is capable of controlling Carrier and many non-Carrier air terminal units in networked or stand-alone applications. The zone controller includes an integrated modulating damper actuator.

Each zone controller can operate in a stand-alone mode based on the sensors installed. The VVT system is a control system designed to provide multiple zones of temperature control using a single, constant volume heating and cooling packaged unit. Traditionally, the VVT system has been primarily a pressure dependent system that adjusts damper position based on space temperature variation from set point. Typically, VVT applications include medical and dental offices, 1 to 3 story commercial buildings, and strip mall and retail stores. See Table 6.

If the supply air sensor (SAT) is not installed, the controller will assume that the air source is on and that the operating mode of the air source is cooling. The zone controller will operate using only its minimum and maximum cooling damper position configuration limits. If the zone controller is equipped with ducted type heat, then when local heating is not active, the temperature read from the SAT sensor will be used to determine if the air source is heating or cooling. The appropriate minimum and maximum cfm limits (heating or cooling) or damper position will be used based on the air source operating mode. The necessary wall thermostat, with space temperature sensor, is separately supplied.

NOTE: In this mode of operation, the minimum heating and cooling limits must NOT be set to zero.

Finally, a primary air temperature (PAT) sensor can be connected to any stand-alone zone controller and mounted in the supply air duct where the sensor is not affected by the airflow of a specific zone. In this case, the zone controller is configured as a linkage coordinator zone with a system size of 1. In this configuration, the zone will determine the air source operating mode (OFF, COOLING, HEATING, or FREE COOLING). Because the PAT sensor is not affected by airflow at the zone, minimum airflow limits may be set to 0 cfm. Each zone controller supports the following set points:

- occupied cooling
- occupied heating
- unoccupied cooling
- unoccupied heating

NOTE: The minimum differential between the heating and cooling set points is 1° F.

For pressure independent applications and when using the bypass controller, the controller provides an accurate low end airflow or pressure measurement to account for any offset which may be inherent in the airflow sensor.

The ZeroCal procedure will be performed every time the air source mode transitions to OFF. Additionally, for systems which operate continuously, a ZeroCal procedure will be performed every 72 hours. To prevent all the dampers from closing simultaneously, an offset time delay based upon the zone controller address is used.

NOTE: When the bypass controller is requested to do a ZeroCal procedure, it will cause the linkage coordinator to send out unoccupied and satisfied zone conditions for 5 minutes so the air source will shut off the fan.

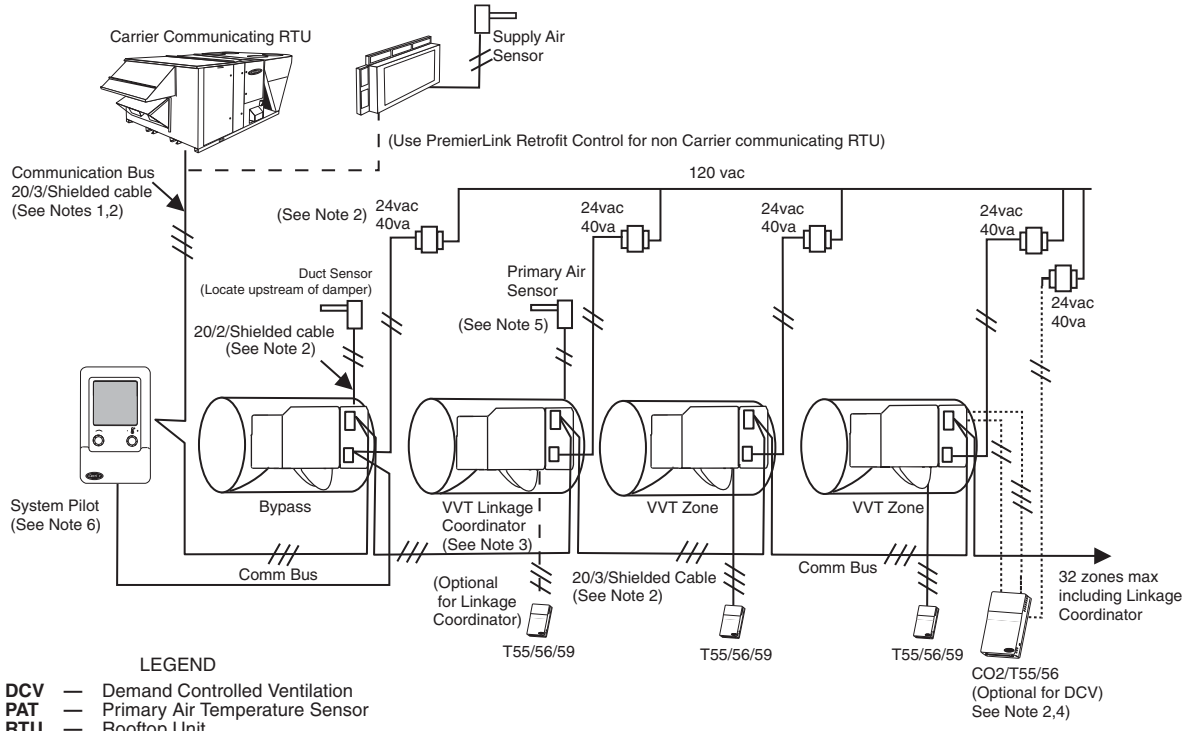

LEGEND

DCV — Demand Controlled Ventilation
PAT — Primary Air Temperature Sensor
RTU — Rooftop Unit
VVT — Variable Volume/Variable Temperature

NOTES:
1. 239 devices maximum per bus. Repeater required every 1000 ft or 60 devices. Maximum of 3 repeaters per bus.
2. Communication bus and sensor wiring MUST be separate from AC power wiring.
3. Up to 32 total zones per system. Maximum of 8 linkage coordinators with a total of 128 devices per single bus.
4. Combination CO_2/T55/T56 sensor may be used in place of T55/T56/T59 on any zone requiring DCV. RTU must be capable of controlling economizer for DCV conditions.
5. Locate PAT in supply air duct from air source unit.
6. System Pilot™ device can share power with bypass controller or VVT zone controller.

Fig. 4 — Typical CCN VVT® Pressure Dependent System

Table 6 — Typical CCN VVT System Components
(Pressure Dependent Control Only)

REQUIRED COMPONENTS		
Devices	**Part Number**	**Usage**
VVT Zone Controller	**33ZCVVTZC-01**	1 per pressure dependent zone
Bypass Controller	**33ZCBC-01**	1 per system
System Pilot Device	**33PILOT-01**	1 per system on com bus. Optional for space sensors
Space Sensor	**33ZCT55SPT** **33ZCT56SPT** **33ZCT59SPT**	1 per zone
Primary Air Temp Sensor	**33ZCSENPAT**	1 per Linkage Coordinator

OPTIONAL COMPONENTS		
Devices	**Part Number**	**Usage**
PremierLink™ Controller	**33CSPREMLK**	1 required per system if non-communicating air source.
Supply Air Temp Sensor	**33ZCSENSAT**	1 required for bypass Option for zones
CO_2 Sensors	**33ZCT55CO2** **33ZCT56CO2**	As required per zone for DCV
Relative Humidity Sensor	**33ZCSENSRH-01** **33ZCSENDRH-01**	Optional to Monitor RH only (if no DCV sensor).
Outside Air Temp Sensor	**33ZCSENOAT** **HH79NZ039**	Recommended with field-installed PremierLink control

LEGEND

DCV — Demand Controlled Ventilation
RH — Relative Humidity
VVT — Variable Volume/Variable Temperature

The zone controller can be used in a fan-powered terminal application for:

- cooling only
- staged and proportional electric heat
- hot water/steam heat (modulating or two-position)
- radiant/baseboard and ducted heat (pressure dependent only)

Analog Electronic Controls (45JA,MA,KA,NA, QA,RA)

DESCRIPTION AND SPECIFICATIONS — The analog electronic controls for the terminals are furnished with analog controls by Krueter. Each analog 45 Series unit has pressure independent controls which include the following:

- sheet metal control enclosure
- flow probe
- thermostat
- damper actuator and analog controller

Pressure independent control packages are available with or without hot water or electric heat, automatic or remote night shutdown, and automatic night setback. All control arrangements include a standard linear inlet flow sensor, control enclosure, SCR fan speed controller, 24-volt transformer, fan relay, and wall thermostat to match the control type.

By combining a basic flow control with optional function devices and an integral electric actuator, the controller provides pressure-independent control for both heating and cooling, together with control of hot water and electric reheat. All analog control arrangements include a standard linear inlet flow sensor, 24v transformer (optional), control enclosure and wall thermostat to match the control type as shown in Tables 7 and 8.

Table 7 – 45JA,KA,QA Control Function Identification

CONTROL PACKAGE NUMBER	SEQUENCE DESCRIPTION AND IDENTIFICATION
2200	Cooling only
2201	Cooling only with automatic night shutdown
2202	Cooling only with remote night shutdown
2203	Cooling only with automatic night setback
2204	Cooling with on/off hot water heat
2205	Cooling with on/off hot water heat and automatic night shutdown
2206	Cooling with on/off hot water heat and remote night shutdown
2207	Cooling with on/off hot water heat and automatic night setback
2208	Cooling with proportional hot water heat
2209	Cooling with proportional hot water heat and automatic night shutdown
2210	Cooling with proportional hot water heat and remote night shutdown
2211	Cooling with proportional hot water heat and automatic night setback
2212	Cooling with up to 2 stages of electric heat
2213	Cooling with up to 2 stages of electric heat and automatic night shutdown
2214	Cooling with up to 2 stages of electric heat and remote night shutdown
2215	Cooling with up to 2 stages of electric heat and automatic night setback
2216	Cooling with up to 2 stages of electric heat and morning warm-up
2218	Cooling with proportional electric heat

Table 8 – 45MA,NA,RA Control Function Identification

CONTROL PACKAGE NUMBER	SEQUENCE DESCRIPTION AND IDENTIFICATION
2300	Cooling with sequenced fan
2301	Cooling with sequenced fan and automatic night shutdown
2302	Cooling with sequenced fan and automatic night setback
2303	Cooling with sequenced fan and on/off hot water heat
2304	Cooling with sequenced fan, on/off hot water and automatic night shutdown
2305	Cooling with sequenced fan, on/off hot water heat and automatic night setback
2306	Cooling with sequenced fan and proportional hot water heat
2307	Cooling with sequenced fan, proportional hot water heat and automatic night shutdown
2308	Cooling with sequenced fan, proportional hot water heat and automatic night setback
2309	Cooling with sequenced fan and up to 2 stages of electric heat
2310	Cooling with sequenced fan, up to 2 stages of electric heat and automatic night shutdown
2311	Cooling with sequenced fan, up to 2 stages of electric heat and automatic setback
2313	Cooling with sequenced fan and proportional electric heat

CONTROL PACKAGE OFFERINGS AND IDENTIFICATION — The electronic analog control system is pressure independent volume reset control that uses a Krueter CSP-5001/5002 VAV controller-actuator. See Fig. 5. The system provides independently adjustable set points for minimum, maximum, and auxiliary airflow limits. The applied volume controller and inlet duct conditions limit the flow range of each size. Airflow is sensed by using a single or multi-point differential (velocity) pressure measuring station or pitot tube (such as an SSS-1000 series airflow sensor). Typically, the airflow range for each size is between 0 to 3,300 fpm through the inlet of the terminal unit with an accuracy of 3%.

The KMC CTE-5100 electronic room thermostat series is designed for use with the CSP-5001/5002 flow controller/actuator. The thermostat operates on a 16 vdc (14 to 20 vac) power supply from the controller and outputs a 0 to 10 vdc signals on the T terminals: T_1 in the cooling mode (direct acting) and T_2 in the heating mode (reverse acting). In general, T_1 and T_3 are used for the cooling mode, T_2 and T_4 for heating. Terminals T_3 and T_4 have fixed 0 to 10 vdc output signal. A single transformer which can be wired 120/208/277 v primary and a 24 v secondary may be used as an option.

Room temperature control is provided by the associated room thermostat which is selected according to the application. The room thermostat provides a fixed hysteresis of 2° F regardless of the minimum and maximum velocity limit set points. Adjustments for the minimum and maximum airflows are made at the thermostat.

NOTE: Transformers for cooling only and hot water reheat units must be specified at time of order.

If the 45 Series units are equipped with electric heat, then only power to the electric heater must be supplied. No additional power source is required for the control. If the unit does not have an electric heater or the control transformer option, a field-supplied dedicated 24-vac/Class II power source must be installed and wired to the zone controller.

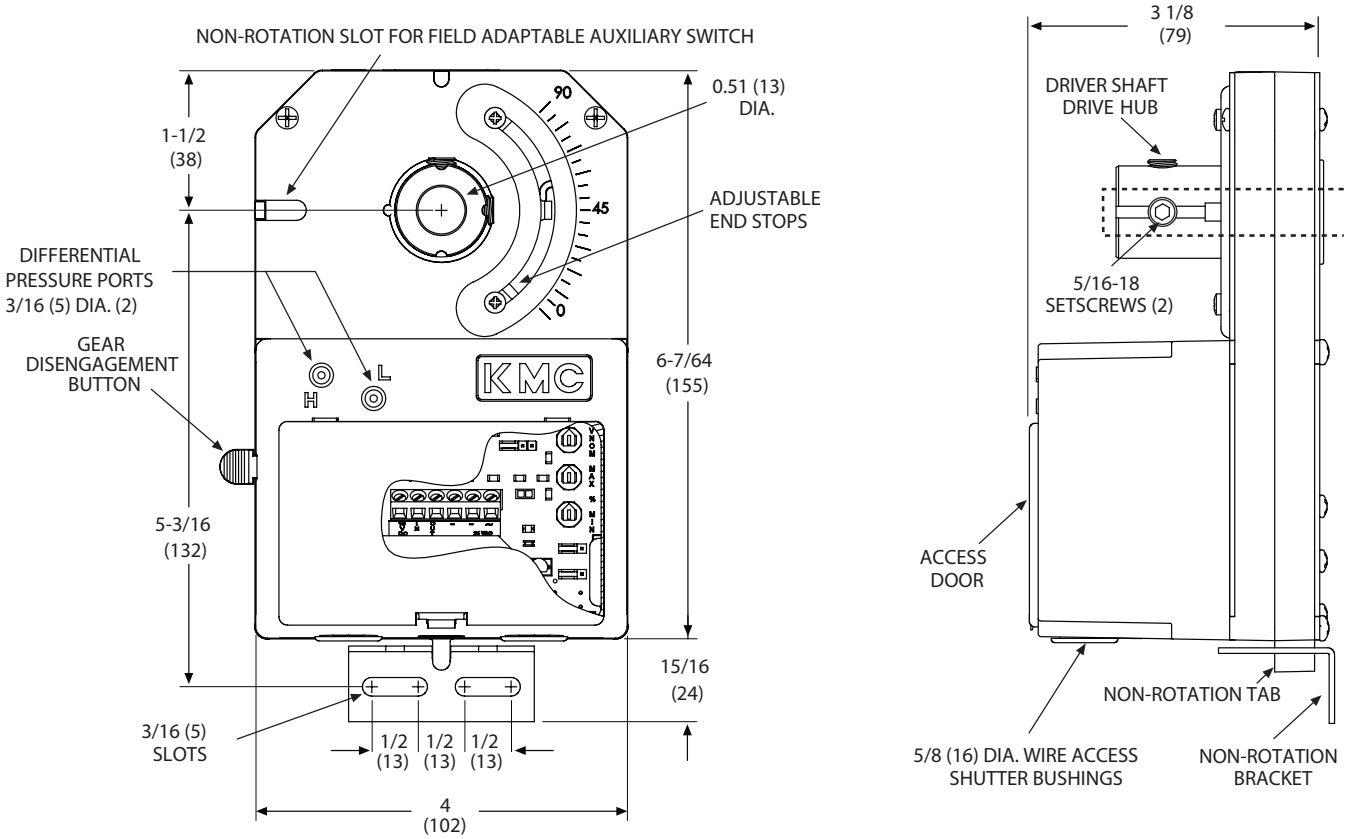

NOTE: Dimensions are in inches. Dimensions in parenthesis are in millimeters.

Fig. 5 — VAV Controller/Actuator Specifications

Control packages for the 45JA,MA,KA,NA,QA,RA are completely wired at the factory, except for the wall thermostat which is furnished, not wired. The control packages correspond directly with the ordering procedure and price pages.

WATER VALVE SPECIFICATIONS — Water valves are field supplied. Carrier offers two different hot water valve applications: on/off and floating point modulating proportional control. See Table 9 for specifications for compatible water valves.

Table 9 — Water Valve Specifications

TYPE	ON/OFF VALVE	3-POINT FLOATING VALVE
Voltage	24 vac	24 vac (15%)
Frequency	50/60 Hz	50/60 Hz
Power Requirement	Not to exceed 15 va	Not to exceed 15va max inrush

NOTE: Field-supplied water valves should be examined carefully to ensure they do not exceed the available power of the transformer. Care must be taken when applying hot water heat to electronic control boxes.

CONTROLLER COMPONENTS AND WIRING — The diagrams on various analog control sequences show the detail wiring of the controller and the control component list, together with the temperature/airflow diagram and the operating sequence. See Appendix E.

Pneumatic Controls (45JP,MP,KP,NP,QP,RP)

DESCRIPTIONS AND SPECIFICATIONS — The 45JP,MP,KP,NP,QP,RP units have pneumatic control of fan-powered terminals for both constant volume and variable volume distribution systems. Pneumatic controls can be furnished to provide a variety of functions. Each set of functions is assigned a control package number and its specified control sequence identification as shown in Tables 10 and 11. All control packages are pressure independent (unless otherwise noted) and available with or without dual maximum airflow, cooling maximum airflow and dual minimum airflow. All control arrangements include a standard linear inlet flow sensor.

CONTROLLER COMPONENTS AND WIRING — The diagrams on various pneumatic control sequences show the detail wiring of the controller and the control component list, together with the temperature/airflow diagram and the operating sequence. See Appendix F.

Table 10 — 45MP,NP,RP Control Function Identification

CONTROL PACKAGE NUMBER	SEQUENCE DESCRIPTION AND IDENTIFICATION
1400	DA-NO single function control with or without hot water or electric heat
1401	RA-NC single function control with or without hot water or electric heat
1402	DA-NO multi-function control with or without hot water or electric heat
1403	RA-NO multi-function control with or without hot water or electric heat
1404	DA-NC multi-function control with or without hot water or electric heat
1405	RA-NC multi-function control with or without hot water or electric heat

LEGEND
DA — Direct-Acting Thermostat
RA — Reverse-Acting Thermostat
NO — Normally Open Damper Position
NC — Normally Closed Damper Position

NOTE: The single function controller provides single functions, i.e., DA-NO. Multi-function controllers are capable of providing DA-NO, DA-NC, RA-NC or RA-NO functions.

Table 11 — 45JP,KP,QP Control Function Identification

CONTROL PACKAGE NUMBER	SEQUENCE DESCRIPTION AND IDENTIFICATION
1300	DA-NO single function control with or without hot water or electric heat
1301	DA-NO single function control with or without hot water or electric heat and with night shutdown
1302	DA-NO single function control with or without hot water or electric heat, with night shutdown and unoccupied heating
1303	RA-NC single function control with or without hot water or electric heat
1304	RA-NC single function control with or without hot water or electric heat and with night shutdown
1305	RA-NC single function control with or without hot water or electric heat, with night shutdown and unoccupied heating
1306	DA-NO multi-function control with or without hot water or electric heat
1307	DA-NO multi-function control with or without hot water or electric heat and with night shutdown
1308	DA-NO multi-function control with or without hot water or electric heat, with night shutdown and unoccupied heating
1309	DA-NC multi-function control with or without hot water or electric heat
1310	DA-NC multi-function control with or without hot water or electric heat and with night shutdown
1311	DA-NC multi-function control with or without hot water or electric heat, with night shutdown and unoccupied heating
1312	RA-NC multi-function control with or without hot water or electric heat
1313	RA-NC multi-function control with or without hot water or electric heat and with night shutdown
1314	RA-NC multi-function control with or without hot water or electric heat, with night shutdown and unoccupied heating
1315	RA-NO multi-function control with or without hot water or electric heat
1316	RA-NO multi-function control with or without hot water or electric heat and with night shutdown
1317	RA-NO multi-function control with or without hot water or electric heat, with night shutdown and unoccupied heating

LEGEND
DA — Direct-Acting Thermostat
RA — Reverse-Acting Thermostat
NO — Normally Open Damper Position
NC — Normally Closed Damper Position

NOTE: The single function controller provides single functions, i.e., DA-NO. Multi-function controllers are capable of providing DA-NO, DA-NC, RA-NC or RA-NO functions.

Field-Supplied Direct Digital Controls or No Controls (45JN,MN,KN,NN,QN,RN)

DESCRIPTION AND SPECIFICATIONS — Control packages are field-supplied for factory mounting, unless otherwise noted. All DDC control arrangements include a standard linear inlet flow sensor, optional transformer to 24 volts, and control enclosure.

All no control arrangements include a standard linear inlet flow sensor.

CONTROL PACKAGE OFFERINGS AND IDENTIFICATION — Each set of functions is assigned a control package number and its specified control sequence identification as shown in Table 12.

Table 12 — 45JN,MN,KN,NN,QN,RN Control Function Identification

CONTROL PACKAGE NUMBER	SEQUENCE DESCRIPTION AND IDENTIFICATION
0000	Terminal Only – No Control
D000	Terminal with Control Box Only*
D001	Terminal with Control Box Electric Heat and 24 v Transformer
P000†	Field Supplied and Mounted Pneumatic Controls Used with DA Thermostat
P001†	Field Supplied and Mounted Pneumatic Controls Used with RA Thermostat
XXXX	By Quote

* For units without electric heat requiring a 24 v control transformer: the control transformer must be ordered from the unit accessories list in Quote Builder.
† 45QN,RN units only.

APPLICATION DATA

Several factors should be considered when selecting fan-powered VAV units.

Airflow Range — Carrier fan-powered VAV units are equipped with a linear averaging flow probe in the unit inlet to allow pressure-independent control of airflow on the basis of a control signal. The flow range is limited by the sensitivity of the controller employed; the inlet duct conditions; and the size of the selected unit.

In most cases, inlet duct minimum airflow of less than 350 fpm should be avoided to prevent erratic control. A minimum flow less than 350 fpm results in pressure signals less than 0.01 in. wg, which cannot be resolved reliably by most control systems. ComfortID™ systems will allow a lower minimum cfm.

Maximum inlet flow limits are typically restricted to less than 2500 fpm by duct pressure loss limitations, although acoustical limits may also limit selection above this range. The 45 Series units will operate well up to 3000 fpm inlet velocity and 6 in. wg inlet pressure, but with increased pressure drop through the supply duct and high noise levels.

System Pressure — Control of duct pressures is the most effective means of ensuring low noise levels, accurate flow control, and minimum energy use. The use of various fan-tracking techniques can ensure optimum system efficiency and operation. Response times of the fan tracking system should be adjustable in order to prevent system oscillations between the pressure independent controllers and the fan system.

Minimum inlet static pressure is the pressure required by a given size box at a specified airflow with the unit damper wide open. This pressure was measured by tests conducted in accordance with AHRI (Air Conditioning, Heating, and Refrigeration Institute) Standard 880, using 3 ft of discharge duct of the same size as the unit plenum. The pressure shown is for the unit only or for unit plus hot water coil or electric heat coil. To determine the total static pressure loss in the distribution system, the minimum inlet static pressure must be added to the duct pressure drop (both upstream and downstream of the 45 Series unit) and the outlet pressure drop.

Acoustics — The primary determinant to terminal acoustics is the inlet and duct size and static pressure. Velocity (flow rate) is also a factor. System sound can be limited by reducing duct pressures in the branch duct supplying the unit.

Lined duct downstream of the unit is very effective in reducing discharge noise levels. System noise is increased when lined duct is not used. Reduced inlet pressure drop will help, provided the techniques used to reduce local duct pressure levels do not increase noise levels in the duct that will be carried into the space. If a discharge attenuator is employed to reduce discharge sound, it should be located far enough away from the unit fan that the resultant high velocity/turbulent airflow does not create noise entering the silencer.

Radiated sound is the most predominant problem with series fan powered terminals, especially when the fan is operating. Keeping the unit at the lowest possible fan speed will produce less sound in the space. Inlet silencers are seldom effective with well-designed fan terminals, especially at the low frequencies where problems are usually found. The 45 Series units have, in effect, a silencer built into the induction port.

Acoustic performance data for 45 Series units is based on tests conducted in accordance with AHRI Standard 880. Data is presented as sound power for the units indicated. Application sound levels are provided as NC levels. These are determined by applying factors provided in AHRI Standard 885, as indicated. Lined duct, ceiling effect, and room attenuation are typical for many office spaces. These assumptions, for discharge (airborne) sound, also include a typical end reflection effect. Alternate effects can be examined by using the air terminal builder program or AHRI Standard 885, available at no charge from AHRI's web page (www.ahrinet.org).

The supplied application data assumes that the sound power levels are split, based on a fixed cfm maximum per split, as indicated. This assumes, however, that split flows are not directed to the same conditioned space. When two split flows are supplied to the same space, the effect of power splits is often negated, depending on the location of the supply outlets and the observer.

The addition of electric or hot water heat has little effect on sound power levels, either discharge or radiated. Sound data presented for the unit is based on inlet pressure drop vs. sound generated. With series flow units, external pressure drop has little effect on the sound produced by the unit.

Linings other than fiberglass can have a significant effect on unit sound power levels. Refer to the Air Terminal Builder selection program for information regarding alternate linings.

If both the diffuser and the terminal are selected at the same delivered sound power level, the discharge (airborne) sound levels should be combined, by octave band, with the sound power generated by the selected diffuser when predicting sound levels in the space. In many cases, diffusers generate higher frequency sound than the terminal, and the two power levels combine without raising the room NC level. Each application of unit and diffuser must be examined individually to verify that the net NC does not increase. (Equal sound power levels, when added, increase the sound level by 3 dB.)

NOTE: Refer to Carrier publication: HVAC Acoustical Application Guidelines (Catalog No. 811-449) for additional information.

CODE CATALOG #	Carrier A United Technologies Company	THIS DOCUMENT IS THE PROPERTY OF CARRIER CORPORATION AND IS DELIVERED UPON THE EXPRESS CONDITION THAT THE CONTENTS WILL NOT BE DISCLOSED OR USED WITHOUT CARRIER CORPORATION'S WRITTEN CONSENT	SUBMISSION OF THESE DRAWINGS OR DOCUMENTS DOES NOT CONSTITUTE PART PERFORMANCE OR ACCEPTANCE OF CONTRACT	ComfortID™ CONSTANT VOLUME FAN	45 JC,KC,QC

ComfortID™ CONSTANT VOLUME FAN—WITHOUT HEAT
CARRIER CONTROL PACKAGE NO. 4440

Application:

Fan powered constant volume terminals are designed to provide heating and cooling for perimeter zones. These terminals are also used in interior zones, where a constant volume of air (consisting of a combination of primary air mixed with recirculated air) provides the required air movement. A typical application is shown in Fig. 1. Design, load requirements, downstream (external) static pressure, fan performance and sound level acceptability govern terminal selection and sizing. The controls provide variable air volume (VAV) control of the primary air. As the primary airflow is reduced, the fan induces air from the plenum to provide a constant volume of air to the zone. These terminals require low inlet static pressure, permitting the use of smaller, more energy efficient primary air fan systems. A wall-mounted space temperature (SPT) sensor located in each zone will sense load requirements and activate the control sequence to accommodate cooling or heating. The control provides a fan start-up sequence to ensure proper rotation of the terminal's fan. Whenever the primary air source begins operation, the control will initiate the fan start-up sequence. Each control will provide a delay that is dependent on the control's address, before initiating the sequence. The delay prevents multiple terminals from performing the sequence simultaneously. The sequence will close the primary air damper fully to stop the primary airflow and allow the fan wheel to stop rotating, then will energize the terminal fan. The damper will then modulate to provide the primary airflow as required by the specific sequence of operation. This control package provides the following sequences of operations:

A. Cooling: (refer to numbers on flow diagram). See Fig. 2.
   1. 1-2 indicates that maximum primary airflow is established by the user-defined maximum cooling airflow set point until the zone comes under control at 2.
   2. Beginning at 2, the primary airflow is regulated over a throttling range by the damper until the minimum cooling airflow set point is reached at 3. The minimum cooling airflow set point can be set to zero by the user. In this case, the damper will fully close if the zone temperature continues to fall. As the primary airflow is reduced, the fan induces ceiling plenum air to maintain a constant air volume to the zone.
   3. 3-4 indicates that, should the zone temperature continue to fall, the damper will hold the user-defined minimum cooling airflow set point.

B. Heating: (when the primary air source is providing heated air, refer to numbers on flow diagram). See Fig. 2.
   1. Upon receiving a heating signal generated by the air source equipped with CCN controls (or a primary air temperature sensor is installed to detect that the air source is heating), should the zone temperature fall below the occupied heating set point, the Heating mode is in effect at 4'.

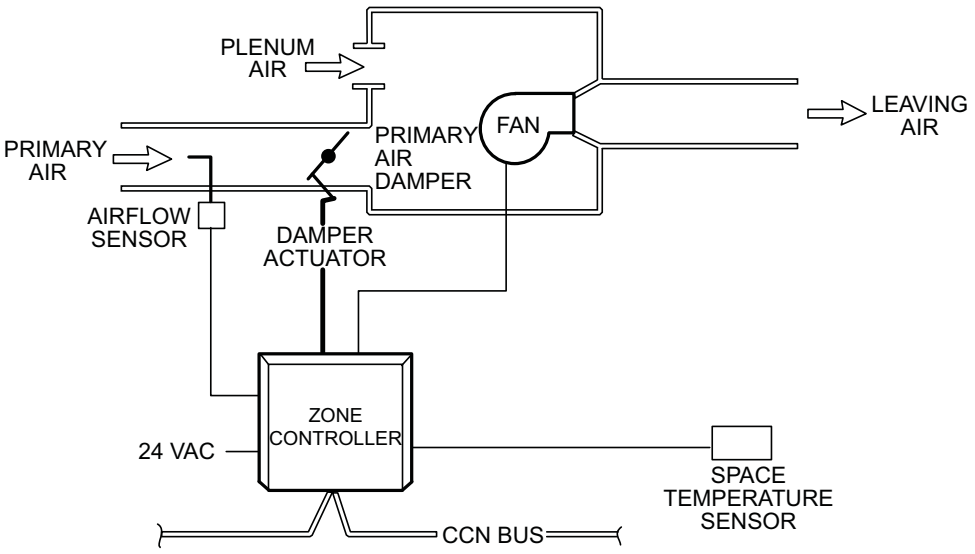

Figure 1 - Series Fan Powered Air Terminal—Without Heat

PRODUCT INFORMATION IS SUBJECT TO CHANGE WITHOUT NOTICE. 01/30/2003

JOB NAME	JOB NUMBER	LOCATION	PAGE NUMBER	DRAWING NUMBER
BUYER	BUYER #	SHEET	1 OF 4	45J/K/Q-C-4440

2. The damper is throttled between the user-defined minimum heating airflow set point at 4' and the user-defined maximum heating airflow set point at 6.
3. The control may be configured to provide constant volume heating. In that case the damper will maintain the minimum heating airflow set point at 4' to supply a constant volume of heated air to the zone.

C. Morning warm-up: Units configured to provide variable volume heating
Upon receiving a morning warm-up signal generated by the air source equipped with CCN controls, the control will initiate the fan start-up sequence and enable the fan. After the fan is operating, the damper will go to the maximum heating airflow set point if the zone temperature is below the occupied heating set point at 6. This allows the warm primary air to be delivered to the zone. As the zone temperature rises above the occupied heating set point, the primary airflow will be reduced to the minimum heating airflow set point at 4'.

D. Unoccupied time period: (cooling)
When the unoccupied period is reached, the user-defined occupied cooling set point is reset upward to a user-defined unoccupied cooling set point. If the primary air source is operating, the primary air damper will throttle in the same manner (as per A) during the unoccupied period, using the unoccupied cooling set point. If the primary air source was not previously operating, the control will initiate the fan start-up sequence and enable the fan before modulating the primary air damper. If the primary air source is not operating, then the fan will remain off.

E. Unoccupied time period: (heating)
When the unoccupied period is reached, the user-defined occupied heating set point is reset downward to a user-defined unoccupied heating set point. If the primary air source is operating, the primary air damper will operate in the same manner (as per B) during the unoccupied period, using the unoccupied heating set point. If the primary air source was not previously operating, the control will initiate the fan start-up sequence and enable the fan before modulating the primary air damper. If the primary air source is not operating, then the fan will remain off.

F. Demand controlled ventilation (option):
This mode is initiated when the zone is occupied and the air source is not heating. It occurs when the CCN control receives a cooling signal from the air source equipped with CCN controls, or when a primary air temperature sensor is installed to detect the air source operation is cooling. The control will monitor a CO_2 sensor (optional) and determine if ventilation is adequate. The zone CO_2 level is compared to the ventilation set point. If the CO_2 level is above the set point (insufficient ventilation), the airflow set point is increased appropriately to maintain proper ventilation. Should the zone's temperature fall below the heating set point, the control will suspend ventilation override until the zone's temperature recovers.

G. Humidity control (option):
This mode is initiated when the zone is occupied and the primary air source is cooling. It occurs when the CCN control receives a cooling signal from the air source equipped with CCN controls, or when a primary air temperature sensor is installed to detect the air source operation in the Cooling mode. The control will monitor a relative humidity (RH) sensor (optional) and determine if the zone's RH is above the humidity set point. If the RH level is above the RH set point, the airflow control point is increased to displace the humid air in the space with air from the primary air source (which has a lower dew point). To ensure non-simultaneous operation of both heating and cooling, should the increased airflow cause the zone's temperature to fall below the heating set point, the control will first suspend the airflow override and reduce the airflow to the minimum cooling set point. This will cause the fan to induce plenum air heat to warm the zone. The airflow override will resume when the zone's temperature

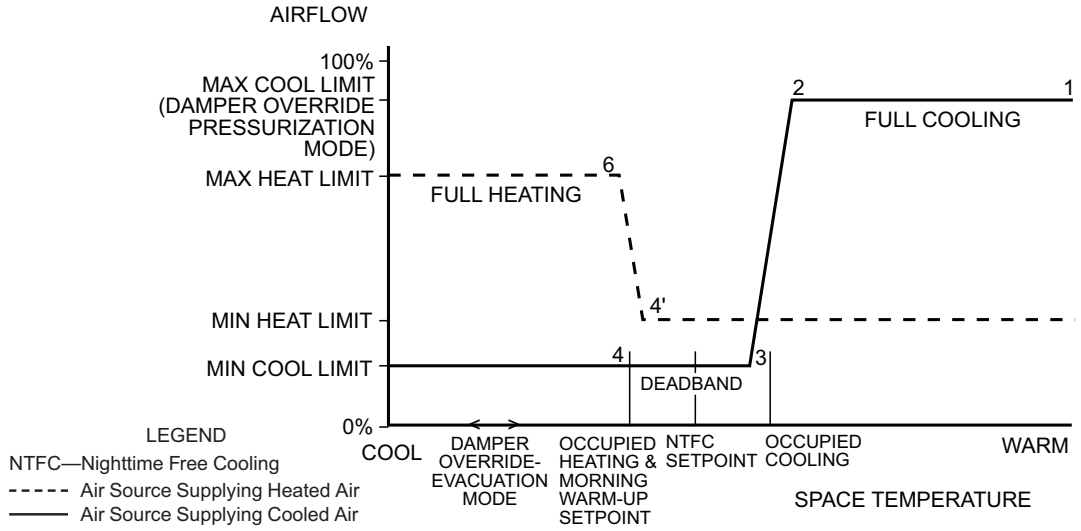

Figure 2 - Sequence of Operation for Series Fan Powered Air Terminal—Without Heat

JOB NAME	JOB NUMBER	LOCATION	PAGE NUMBER	DRAWING NUMBER
BUYER	BUYER #	SHEET	2 OF 4	45J/K/Q-C-4440

recovers and be disabled once the zone's RH level falls below the zone's RH set point.

H. Damper override:
The damper override function is energized through the use of a field-supplied smoke control panel connected to the air source equipped with CCN controls. The smoke control panel and installation must be in accordance with UL864 and local codes. The damper override function overrides the airflow setting used by the logic. It will cause the terminal to operate the fan and provide the configured maximum cooling airflow when the air source is in the Pressurization mode, and to disable the fan and fully close the primary air damper when the air source is in the Evacuation mode.

I. Nighttime free cooling:
The logic calculates a nighttime free cooling (NTFC) temperature set point halfway between the occupied heating and occupied cooling temperature set points. Upon receiving a NTFC signal generated by the air source equipped with CCN controls (or a primary air temperature sensor is installed to detect the air source is operating in the NTFC mode), the control will initiate the fan start-up sequence. Once the fan is operating, the primary air damper will modulate and throttle between the maximum and minimum cooling airflow set points to maintain the zone's NTFC temperature set point.

J. Primary air source shuts off:
1. The fan will be disabled.
2. The damper will fully close and the control will recalibrate the airflow transducer.
3. If the primary air source remains off (no primary air), the damper will be repositioned to 50% open to allow the air source to restart.

JOB NAME	JOB NUMBER	LOCATION	PAGE NUMBER	DRAWING NUMBER
BUYER	BUYER #	SHEET	3 OF 4	45J/K/Q-C-4440

CODE	Carrier A United Technologies Company	THIS DOCUMENT IS THE PROPERTY OF CARRIER CORPORATION AND IS DELIVERED UPON THE EXPRESS CONDITION THAT THE CONTENTS WILL NOT BE DISCLOSED OR USED WITHOUT CARRIER CORPORATION'S WRITTEN CONSENT	SUBMISSION OF THESE DRAWINGS OR DOCUMENTS DOES NOT CONSTITUTE PART PERFORMANCE OR ACCEPTANCE OF CONTRACT	Comfort ID ™ CONSTANT VOLUME FAN	45 JC,KC,QC
CATALOG #					

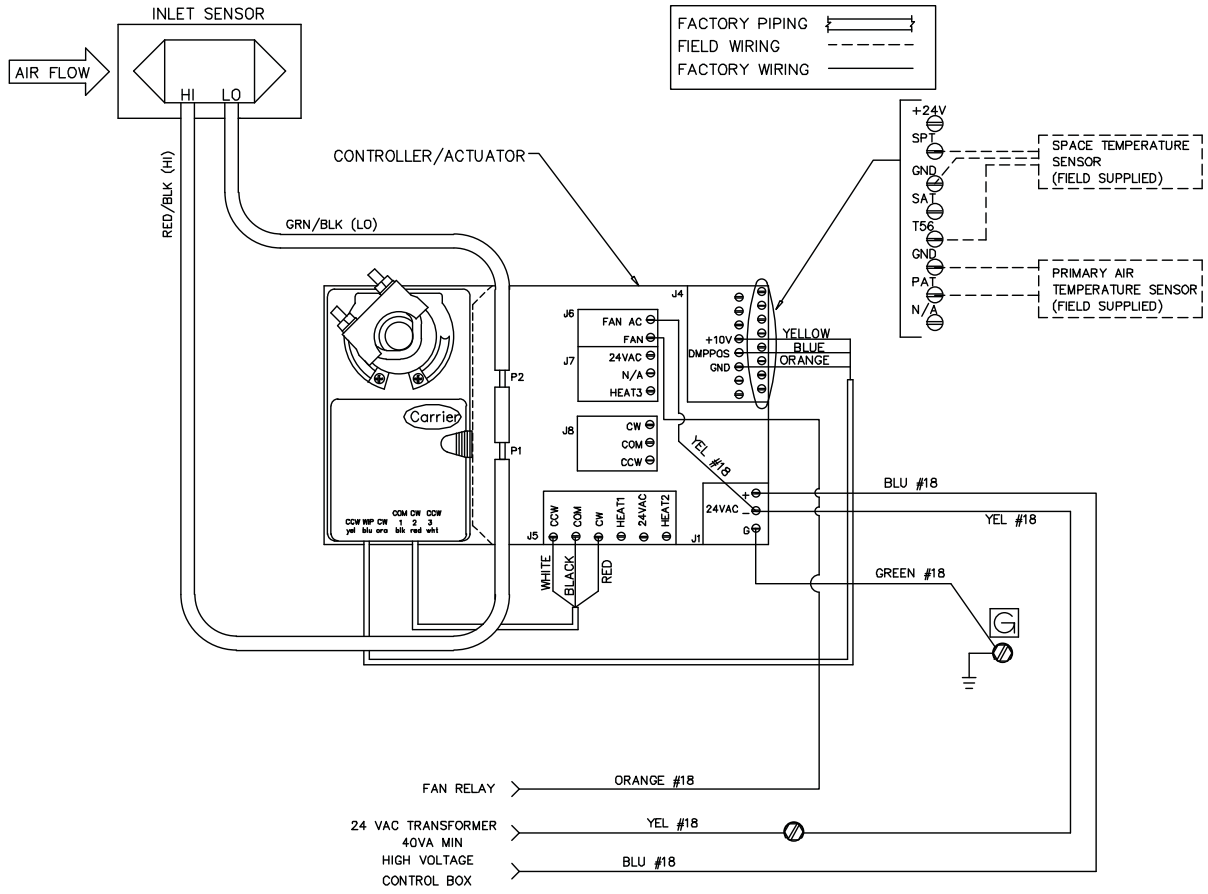

Notes:

1. For 45J/K/Q units the Actuator is configured CW to close.

2. CAUTION:
   Electric shock may result. Disconnect unit prior to servicing unit.
3. These controls have been wired to comply with UL-1995.

PRODUCT INFORMATION IS SUBJECT TO CHANGE WITHOUT NOTICE.

JOB NAME	JOB NUMBER	LOCATION	PAGE NUMBER	DRAWING NUMBER
BUYER	BUYER #	SHEET	4 OF 4	45J/K/Q-C-4440

CODE CATALOG #	Carrier A United Technologies Company	THIS DOCUMENT IS THE PROPERTY OF CARRIER CORPORATION AND IS DELIVERED UPON THE EXPRESS CONDITION THAT THE CONTENTS WILL NOT BE DISCLOSED OR USED WITHOUT CARRIER CORPORATION'S WRITTEN CONSENT	SUBMISSION OF THESE DRAWINGS OR DOCUMENTS DOES NOT CONSTITUTE PART PERFORMANCE OR ACCEPTANCE OF CONTRACT	ComfortID™ CONSTANT VOLUME FAN	45 JC,KC,QC

ComfortID™ CONSTANT VOLUME FAN—WITH UP TO 3 STAGES OF ELECTRIC HEAT CARRIER CONTROL PACKAGE NO. 4442

Application:

Fan powered constant volume terminals are designed to provide heating and cooling for perimeter zones. These terminals are also used in interior zones, where a constant volume of air (consisting of a combination of primary air mixed with recirculated air) provides the required air movement. A typical application is shown in Fig. 1. Design, load requirements, downstream (external) static pressure, fan performance and sound level acceptability govern terminal selection and sizing. The controls provide variable air volume (VAV) control of the primary air for cooling and may energize up to 3 stages of electric heat to supplement fan induced plenum heat during heating. As the primary airflow is reduced, the fan induces air from the plenum to provide a constant volume of air to the zone. These terminals require low inlet static pressure, permitting the use of smaller, more energy efficient primary air fan systems. A wall-mounted space temperature (SPT) sensor located in each zone will sense load requirements and activate the control sequence to accommodate cooling or heating. The control provides a fan start-up sequence to ensure proper rotation of the terminal's fan. Whenever the primary air source begins operation, the control will initiate the fan start-up sequence. Each control will provide a delay that is dependent on the control's address, before initiating the sequence. The delay prevents multiple terminals from performing the sequence simultaneously. The sequence will close the primary air damper fully to stop the primary airflow and allow the fan wheel to stop rotating, then will energize the terminal fan. The damper will then modulate to provide the primary airflow as required by the specific sequence of operation. This control package provides the following sequences of operations:

A. Cooling: (refer to numbers on flow diagram). See Fig. 2.
   1. 1-2 indicates that maximum primary airflow is established by the user-defined maximum cooling airflow set point until the zone comes under control at 2.
   2. Beginning at 2, the primary airflow is regulated over a throttling range by the damper until the minimum cooling airflow set point is reached at 3. The minimum cooling airflow set point can be set to zero by the user. In this case, the damper will fully close if the zone temperature continues to fall. As the primary airflow is reduced, the fan induces ceiling plenum air to maintain a constant air volume to the zone.
   3. 3-4 indicates that, should the zone temperature continue to fall, the damper will hold the user-defined minimum cooling airflow set point.

B. Auxiliary electric heating: (when the primary air source is cooling, refer to numbers on flow diagram). See Fig. 2. The installer is responsible that the temperature is no more than 120 F maximum discharge from the heating apparatus for safe and proper operation. Follow the manufacturer's recommendations for specific equipment.
   1. Should the zone temperature fall below the occupied heating set point, the Occupied Heating mode is in effect at 4.

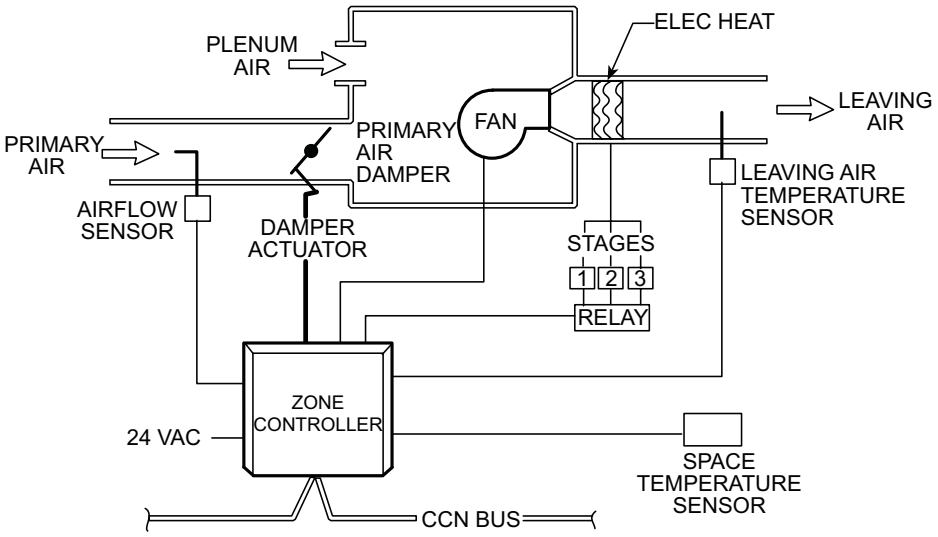

Figure 1 - Series Fan Powered Air Terminal With Staged Electric Heat

PRODUCT INFORMATION IS SUBJECT TO CHANGE WITHOUT NOTICE. 01/30/2003

JOB NAME	JOB NUMBER	LOCATION	PAGE NUMBER	DRAWING NUMBER
BUYER	BUYER #	SHEET	1 OF 4	45J/K/Q-C-4442

2. Up to 3 stages of electric heat (1h, 2h and 3h) are energized successively until all stages are activated as needed. The stages are controlled so as not to exceed the maximum discharge temperature limit. During the Heating mode, the primary airflow is maintain at the user-defined minimum cooling airflow set point.
3. When the zone temperature rises above the occupied heating set point, the heater stages are disabled; the Ventilation mode is reactivated at 4.

C. Heating: (when the primary air source is providing heated air, refer to numbers on flow diagram). See Fig. 2.

1. Upon receiving a heating signal generated by the air source equipped with CCN controls (or a primary air temperature sensor is installed to detect that the air source is heating), should the zone temperature fall below the occupied heating set point, the Heating mode is in effect at 4'.
2. The primary air damper is throttled between the user-defined minimum heating airflow set point at 4' and the user-defined maximum heating airflow set point at 6. The stages of electric heat will operate as required to supplement the temperature of the mixture of induced plenum air and heated primary air. The heater is controlled so as not to exceed the maximum discharge temperature limit.
3. The control may be configured to provide minimum primary airflow during heating. In that case the primary air damper will maintain the minimum heating airflow set point at 4' to provide ventilation air to the zone. If the temperature of the mixture of induced plenum air and heated primary air is insufficient to meet the zone's heating requirements, electric heat will operate as required to supplement the temperature. The heater is controlled so as not to exceed the maximum discharge temperature limit.

D. Unoccupied time period: (cooling)
When the unoccupied period is reached, the user-defined occupied cooling set point is reset upward to a user-defined unoccupied cooling set point. If the primary air source is operating, the primary air damper will throttle in the same manner (as per A) during the unoccupied period, using the unoccupied cooling set point. If the primary air source was not previously operating, the control will initiate the fan start-up sequence and enable the fan before modulating the primary air damper. If the primary air source is not operating, then the fan will remain off.

E. Unoccupied time period: (auxiliary electric heating)
When the unoccupied period is reached, the user-defined occupied heating set point is reset downward to a user-defined unoccupied heating set point. If the primary air source is operating and the zone's temperature is below the unoccupied heating set point, the Unoccupied Heating mode is in effect.The primary air damper will fully close and the terminal fan will start. The electric heat stages will operate to supplement the plenum air heat as required limit.
When the zone's temperature rises above the unoccupied heating set point, the electric heat stages are disabled and the fan will stop after the user-defined fan delay has expired. The primary air damper will then be returned to a 50% open position to allow the primary air source to properly start.

F. Unoccupied time period: (heating)
When the unoccupied period is reached, the user-defined occupied heating set point is reset downward to a user-defined unoccupied heating set point. If the primary air source is operating, the primary air damper will operate in the same manner (as per C) during the unoccupied period, using the unoccupied heating set point. The electric heat stages will operate to supplement the temperature of the mixture of induced plenum air and primary air. If the primary air source was not previously operating, the control will initiate the fan start-up sequence and enable the fan before modulating the primary air damper. If the primary

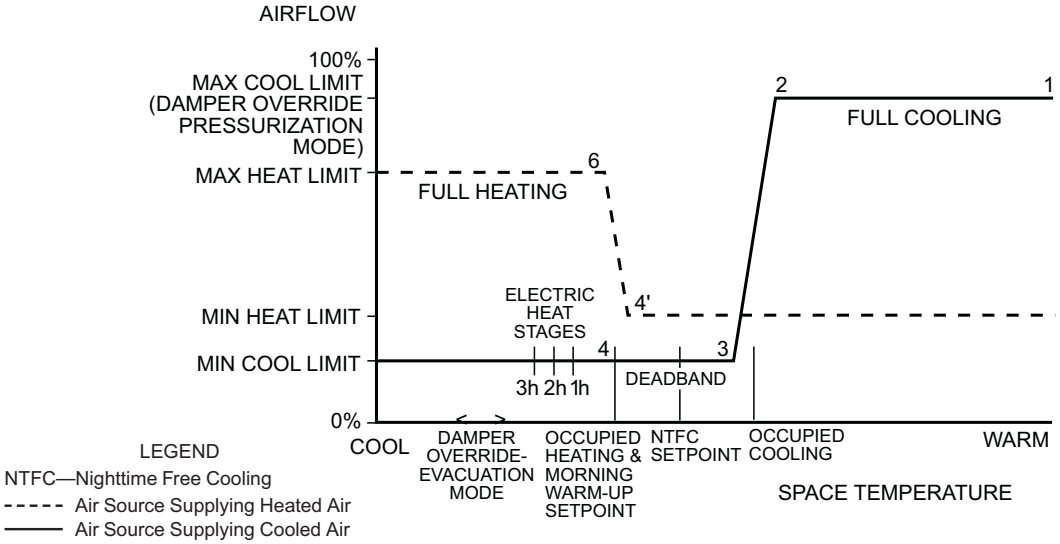

Figure 2 - Sequence of Operation for Series Fan Powered Air Terminal With Staged Electric Heat

JOB NAME	JOB NUMBER	LOCATION	PAGE NUMBER	DRAWING NUMBER
BUYER	BUYER #	SHEET	2 OF 4	45J/K/Q-C-4442

air source is not operating and the zone temperature is above the unoccupied heating set point, then the fan will remain off.

G. Morning warm-up: Units configured to provide variable volume heating
Upon receiving a morning warm-up signal generated by the air source equipped with CCN controls, the control will initiate the fan start-up sequence and enable the fan. After the fan is operating, the damper will go to the maximum heating airflow set point if the zone temperature is below the occupied heating set point at 6. The electric heat stages will operate to supplement the temperature of the air as required and controlled so as not exceed the maximum discharge temperature limit.

Follow the manufacturer's recommendations for specific equipment. As the zone temperature rises above the occupied heating set point, the electric heat stages are disabled (if any were previously operating) and the primary airflow will be reduced to the minimum heating airflow set point at 4'.

H. Demand controlled ventilation (option):
This mode is initiated when the zone is occupied and the air source is not heating. It occurs when the CCN controls receives a cooling signal from the air source equipped with CCN controls, or when a primary air temperature sensor is installed to detect the air source operation is cooling. The control will monitor a CO_2 sensor (optional) and determine if ventilation is adequate. The zone CO_2 level is compared to the ventilation set point. If the CO_2 level is above the set point (insufficient ventilation), the airflow set point is increased appropriately to maintain proper ventilation. Should the zone's temperature fall below the heating set point, the control will suspend ventilation override until the zone's temperature recovers. If after supplying plenum heat for the user-specified heat delay, the heat was insufficient to raise the zone's temperature, then heating will be enabled and will operate as per B.

I. Humidity control (option):
This mode is initiated when the zone is occupied and the primary air source is cooling. It occurs when the CCN control receives a cooling signal from the air source equipped with CCN controls, or when a primary air temperature sensor is installed to detect the air source operation is Cooling. The control will monitor a relative humidity (RH) sensor (optional) and determine if the zone's RH is above the humidity set point. If the RH level is above the RH set point, the airflow control point is increased to displace the humid air in the space with air from the primary air source (which has a lower dew point). To ensure non-simultaneous operation of both heating and cooling, should the increased airflow cause the zone's temperature to fall below the heating set point, the control will first suspend the airflow override and reduce the airflow to the minimum cooling set point. This will cause the fan to induce plenum air heat to warm the zone. If after supplying plenum heat for the user-specified heat delay, the heat was insufficient to raise the zone's temperature, then heating will be enabled and will operate as per B. The airflow override will resume when the zone's temperature recovers and be disabled once the zone's RH level falls below the zone's RH set point.

J. Damper override:
The damper override function is energized through the use of a field-supplied smoke control panel connected to the air source equipped with CCN controls. The smoke control panel and installation must be in accordance with UL864 and local codes. The damper override function overrides the airflow setting used by the logic. It will cause the terminal to operate the fan and provide the configured maximum cooling airflow when the air source is in the Pressurization mode, and to disable the fan and fully close the primary air damper when the air source is in the Evacuation mode.

K. Nighttime free cooling:
The logic calculates a nighttime free cooling (NTFC) temperature set point halfway between the occupied heating and occupied cooling temperature set points. Upon receiving a NTFC signal generated by the air source equipped with CCN controls (or a primary air temperature sensor is installed to detect the air source is operating in the NTFC mode), the control will initiate the fan start-up sequence. Once the fan is operating, the primary air damper will modulate and throttle between the maximum and minimum cooling airflow set points to maintain the zone's NTFC temperature set point.

L. Primary air source shuts off:
1. The fan will be disabled unless the zone temperature falls below the heating set point (refer to E).
2. The damper will fully close and the control will recalibrate the airflow transducer.
3. If the primary air source remains off (no primary air), the damper will be repositioned to 50% open to allow the air source to restart.

JOB NAME	JOB NUMBER	LOCATION	PAGE NUMBER	DRAWING NUMBER
BUYER	BUYER #	SHEET	3 OF 4	45J/K/Q-C-4442

CODE	Carrier A United Technologies Company	THIS DOCUMENT IS THE PROPERTY OF CARRIER CORPORATION AND IS DELIVERED UPON THE EXPRESS CONDITION THAT THE CONTENTS WILL NOT BE DISCLOSED OR USED WITHOUT CARRIER CORPORATION'S WRITTEN CONSENT	SUBMISSION OF THESE DRAWINGS OR DOCUMENTS DOES NOT CONSTITUTE PART PERFORMANCE OR ACCEPTANCE OF CONTRACT	ComfortID™ CONSTANT VOLUME FAN	45 JC,KC,QC
CATALOG #					

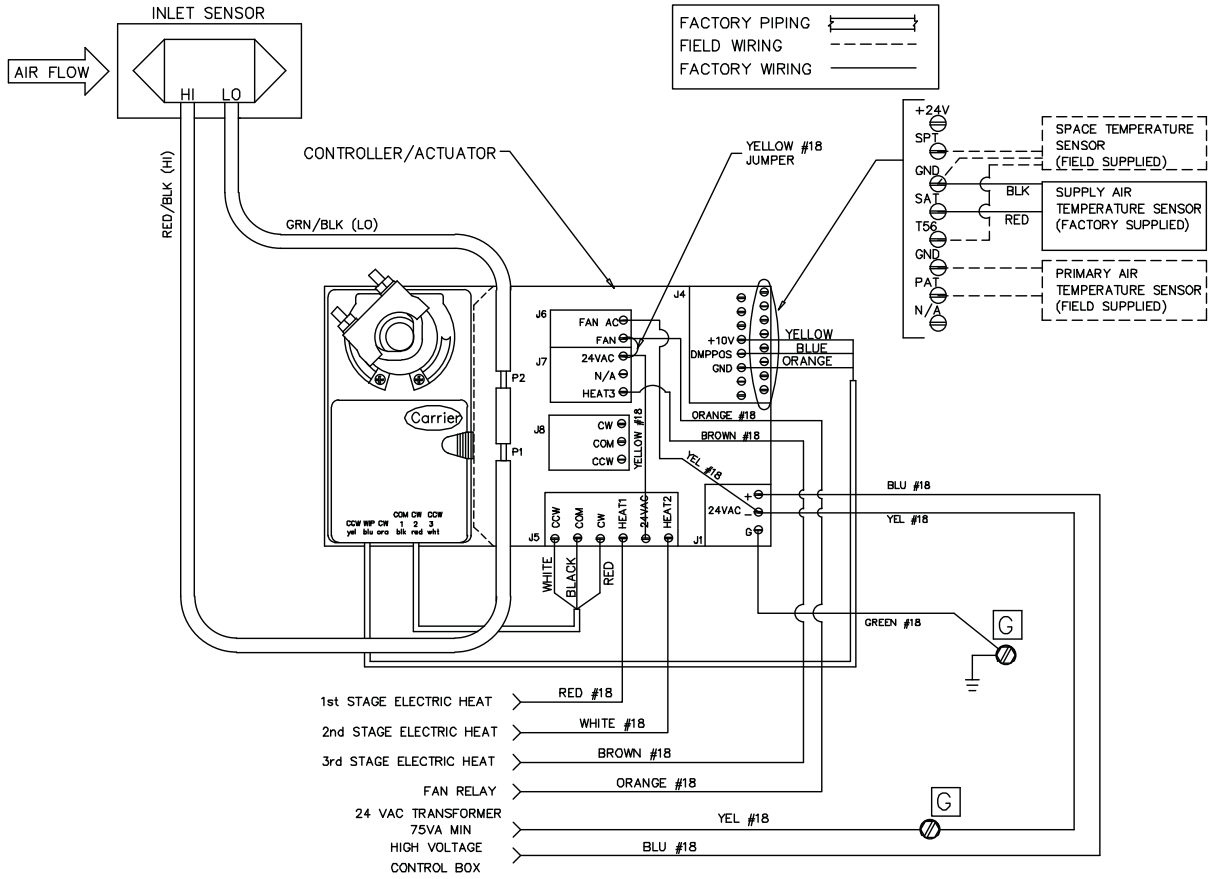

Notes:

1. For 45J/K/Q units the Actuator is configured CW to close.

2. CAUTION:
   Electric shock may result. Disconnect unit prior to servicing unit.
3. These controls have been wired to comply with UL-1995.

PRODUCT INFORMATION IS SUBJECT TO CHANGE WITHOUT NOTICE.

JOB NAME	JOB NUMBER	LOCATION	PAGE NUMBER	DRAWING NUMBER
BUYER	BUYER #	SHEET	4 OF 4	45J/K/Q-C-4442

CODE CATALOG #	Carrier A United Technologies Company	THIS DOCUMENT IS THE PROPERTY OF CARRIER CORPORATION AND IS DELIVERED UPON THE EXPRESS CONDITION THAT THE CONTENTS WILL NOT BE DISCLOSED OR USED WITHOUT CARRIER CORPORATION'S WRITTEN CONSENT	SUBMISSION OF THESE DRAWINGS OR DOCUMENTS DOES NOT CONSTITUTE PART PERFORMANCE OR ACCEPTANCE OF CONTRACT	ComfortID™ CONSTANT VOLUME FAN	45 JC,KC,QC

ComfortID™ CONSTANT VOLUME FAN—WITH ON/OFF HOT WATER HEAT CARRIER CONTROL PACKAGE NO. 4443

Application:

Fan powered constant volume terminals are designed to provide heating and cooling for perimeter zones. These terminals are also used in interior zones, where a constant volume of air (consisting of a combination of primary air mixed with recirculated air) provides the required air movement. A typical application is shown in Fig. 1. Design, load requirements, downstream (external) static pressure, fan performance and sound level acceptability govern terminal selection and sizing. The terminal fan performance is selected to provide sufficient pressure to overcome the coil pressure drop and external static pressure, permitting the use of smaller, more energy efficient primary air fan systems. (It is important that the correct fan and fan speed be selected to ensure that sufficient Btu's can be delivered to meet the heating and cooling load requirements.)The controls provide variable air volume (VAV) control of the primary air for cooling and may operate a two-position heating valve connected to a heating coil to supplement fan induced plenum heat during heating. As the primary airflow is reduced, the fan induces air from the plenum to provide a constant volume of air to the zone. A wall-mounted space temperature (SPT) sensor located in each zone will sense load requirements and activate the control sequence to accommodate cooling or heating. The control provides a fan start-up sequence to ensure proper rotation of the terminal's fan. Whenever the primary air source begins operation, the control will initiate the fan start-up sequence. Each control will provide a delay that is dependent on the control's address, before initiating the sequence. The delay prevents multiple terminals from performing the sequence simultaneously. The sequence will close the primary air damper fully to stop the primary airflow and allow the fan wheel to stop rotating, then will energize the terminal fan. The damper will then modulate to provide the primary airflow as required by the specific sequence of operation. This control package provides the following sequences of operations:

A. Cooling: (refer to numbers on flow diagram). See Fig. 2.
   1. 1-2 indicates that maximum primary airflow is established by the user-defined maximum cooling airflow set point until the zone comes under control at 2.
   2. Beginning at 2, the primary airflow is regulated over a throttling range by the damper until the minimum cooling airflow set point is reached at 3. The minimum cooling airflow set point can be set to zero by the user. In this case, the damper will fully close if the zone temperature continues to fall. As the primary airflow is reduced, the fan induces ceiling plenum air to maintain a constant air volume to the zone.
   3. 3-4 indicates that, should the zone temperature continue to fall, the damper will hold the user-defined minimum cooling airflow set point.

B. Auxiliary hot water heating: (when the primary air source is cooling, refer to numbers on flow diagram). See Fig. 2. The installer is responsible for proper selection of the fan speed to provide sufficient airflow through the heating coil.

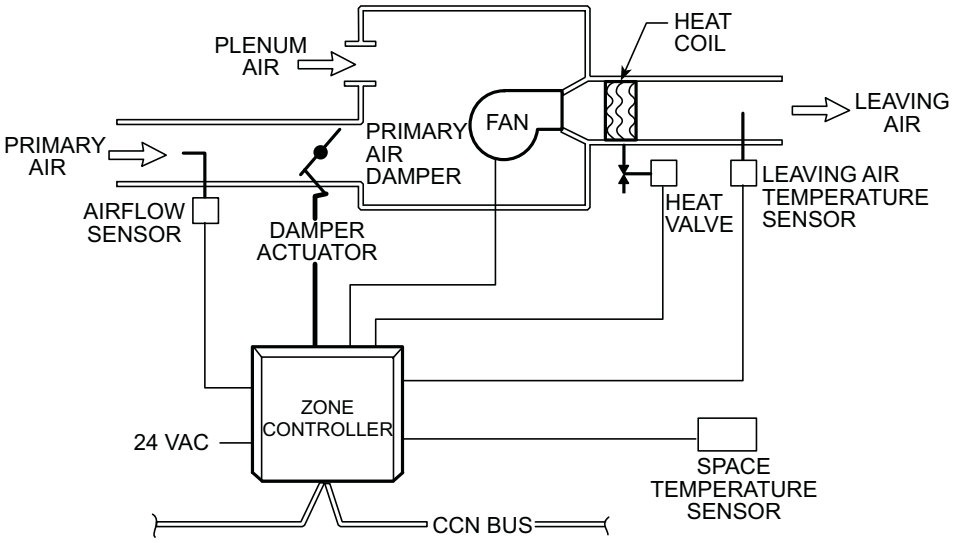

Figure 1 - Series Fan Powered Air Terminal With Two-Position Hot Water Heat

PRODUCT INFORMATION IS SUBJECT TO CHANGE WITHOUT NOTICE. 01/30/2003

JOB NAME	JOB NUMBER	LOCATION	PAGE NUMBER	DRAWING NUMBER
BUYER	BUYER #	SHEET	1 OF 4	45J/K/Q-C-4443

1. Should the zone temperature fall below the occupied heating set point, the Occupied Heating mode is in effect at 4.
2. At 5, the on/off hot water valve will open to provide heating and satisfy the load requirements. The valve is controlled so as not to exceed the maximum discharge temperature limit. The primary airflow is maintain at the user-defined minimum cooling airflow set point.
3. When the zone temperature rises above the occupied heating set point, the valve closes and the Ventilation mode is reactivated at 4.

C. Heating: (when the primary air source is providing heated air, refer to numbers on flow diagram). See Fig. 2.

1. Upon receiving a heating signal generated by the air source equipped with CCN controls (or a primary air temperature sensor is installed to detect that the air source is heating), should the zone temperature fall below the occupied heating set point, the Heating mode is in effect at 4'.
2. The primary air damper is throttled between the user-defined minimum heating airflow set point at 4' and the user-defined maximum heating airflow set point at 6. The hot water valve will open if required to supplement the temperature of the mixture of induced plenum air and heated primary air. The valve is controlled so as not to exceed the maximum discharge temperature.
3. The control may be configured to provide minimum primary airflow during heating. In that case the primary air damper will maintain the minimum heating airflow set point at 4' to provide ventilation air to the zone. If the temperature of the mixture of induced plenum air and heated primary air is insufficient to meet the zone's heating requirements, the hot water valve will operate as required. The valve is controlled so as not to exceed the maximum discharge temperature.

D. Unoccupied time period: (cooling)
When the unoccupied period is reached, the user-defined occupied cooling set point is reset upward to a user-defined unoccupied cooling set point. If the primary air source is operating, the primary air damper will throttle in the same manner (as per A) during the unoccupied period, using the unoccupied cooling set point. If the primary air source was not previously operating, the control will initiate the fan start-up sequence and enable the fan before modulating the primary air damper. If the primary air source is not operating, then the fan will remain off.

E. Unoccupied time period: (auxiliary hot water heating)
When the unoccupied period is reached, the user-defined occupied heating set point is reset downward to a user-defined unoccupied heating set point. If the primary air source is not operating and the zone's temperature is below the unoccupied heating set point, the Unoccupied Heating mode is in effect.The primary air damper will fully close and the terminal fan will start. The hot water valve will open to supplement the plenum air heat as required. When the zone's temperature rises above the unoccupied heating set point, the valve will close and the fan will stop after the user-specified fan delay has expired. The primary air damper will then be returned to a 50% open position to allow the primary air source to properly start.

F. Unoccupied time period: (heating)
When the unoccupied period is reached, the user-defined occupied heating set point is reset downward to a user-defined unoccupied heating set point. If the primary air source is operating, the primary air damper will operate in the same manner (as per C) during the unoccupied period, using the unoccupied heating set point. The hot water valve will operate as required to supplement the temperature of the mixture of induced plenum air and primary air. If the primary air source was not previously operating, the control will initiate the fan start-up sequence and enable the fan before modulating the primary air damper. If the

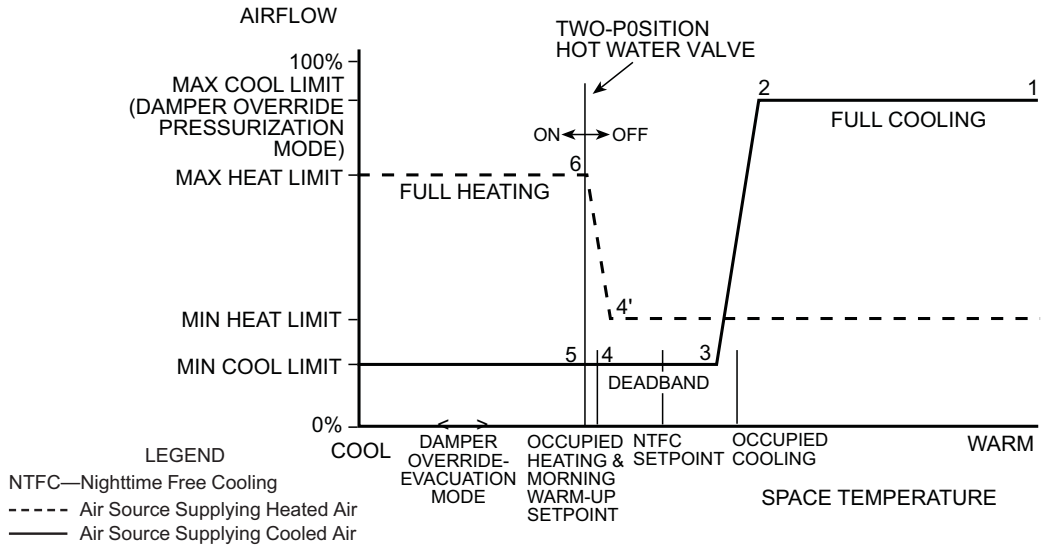

Figure 2 - Sequence of Operation for Series Fan Powered Air Terminal With Two-Position Hot Water Heat

JOB NAME	JOB NUMBER	LOCATION	PAGE NUMBER	DRAWING NUMBER
BUYER	BUYER #	SHEET	2 OF 4	45J/K/Q-C-4443

primary air source is not operating and the zone temperature is above the unoccupied heating set point, then the fan will remain off.

G. Morning warm-up: Units configured to provide variable volume heating
Upon receiving a morning warm-up signal generated by the air source equipped with CCN controls, the control will initiate the fan start-up sequence and enable the fan. After the fan is operating, the damper will go to the maximum heating airflow set point if the zone temperature is below the occupied heating set point at 6. The hot water valve will open if required to supplement the temperature of the air and controlled so as not exceed the maximum discharge temperature limit. As the zone temperature rises above the occupied heating set point, the hot water valve will close (if previously open) and the primary airflow will be reduced to the minimum heating airflow set point at 4'.

H. Demand controlled ventilation (option):
This mode is initiated when the zone is occupied and the air source is not heating. It occurs when the CCN control receives a cooling signal from the air source equipped with CCN controls, or when a primary air temperature sensor is installed to detect the air source operation is cooling. The control will monitor a CO_2 sensor (optional) and determine if ventilation is adequate. The zone CO_2 level is compared to the ventilation set point. If the CO_2 level is above the set point (insufficient ventilation), the airflow set point is increased appropriately to maintain proper ventilation. Should the zone's temperature fall below the heating set point, the control will suspend ventilation override until the zone's temperature recovers. If after supplying plenum heat for the user-specified heat delay, the heat was insufficient to raise the zone's temperature, then heating will be enabled and will operate as per B.

I. Humidity control (option):
This mode is initiated when the zone is occupied and the primary air source is cooling. It occurs when the CCN control receives a cooling signal from the air source equipped with CCN controls, or when a primary air temperature sensor is installed to detect the air source operation is Cooling. The control will monitor a relative humidity (RH) sensor (optional) and determine if the zone's RH is above the humidity set point. If the RH level is above the RH set point, the airflow control point is increased to displace the humid air in the space with air from the primary air source (which has a lower dew point). To ensure non-simultaneous operation of both heating and cooling, should the increased airflow cause the zone's temperature to fall below the heating set point, the control will first suspend the airflow override and reduce the airflow to the minimum cooling set point. This will cause the fan to induce plenum air heat to warm the zone. If after supplying plenum heat for the user-specified heat delay, the heat was insufficient to raise the zone's temperature, then heating will be enabled and will operate as per B. The airflow override will resume when the zone's temperature recovers and be disabled once the zone's RH level falls below the zone's RH set point.

J. Damper override:
The damper override function is energized through the use of a field-supplied smoke control panel connected to the air source equipped with CCN controls. The smoke control panel and installation must be in accordance with UL864 and local codes. The damper override function overrides the airflow setting used by the logic. It will cause the terminal to operate the fan and provide the configured maximum cooling airflow when the air source is in the Pressurization mode, and to disable the fan and fully close the primary air damper when the air source is in the Evacuation mode.

K. Nighttime free cooling:
The logic calculates a nighttime free cooling (NTFC) temperature set point halfway between the occupied heating and occupied cooling temperature set points. Upon receiving a NTFC signal generated by the air source equipped with CCN controls (or a primary air temperature sensor is installed to detect the air source is operating in the NTFC mode), the control will initiate the fan start-up sequence. Once the fan is operating, the primary air damper will modulate and throttle between the maximum and minimum cooling airflow set points to maintain the zone's NTFC temperature set point.

L. Primary air source shuts off:
1. The fan will be disabled unless the zone temperature falls below the heating set point (refer to E).
2. The damper will fully close and the control will recalibrate the airflow transducer.
3. If the primary air source remains off (no primary air), the damper will be repositioned to 50% open to allow the air source to restart.

JOB NAME	JOB NUMBER	LOCATION	PAGE NUMBER	DRAWING NUMBER
BUYER	BUYER #	SHEET	3 OF 4	45J/K/Q-C-4443

CODE	Carrier A United Technologies Company	THIS DOCUMENT IS THE PROPERTY OF CARRIER CORPORATION AND IS DELIVERED UPON THE EXPRESS CONDITION THAT THE CONTENTS WILL NOT BE DISCLOSED OR USED WITHOUT CARRIER CORPORATION'S WRITTEN CONSENT	SUBMISSION OF THESE DRAWINGS OR DOCUMENTS DOES NOT CONSTITUTE PART PERFORMANCE OR ACCEPTANCE OF CONTRACT	ComfortID™ CONSTANT VOLUME FAN	45 JC,KC,QC
CATALOG #					

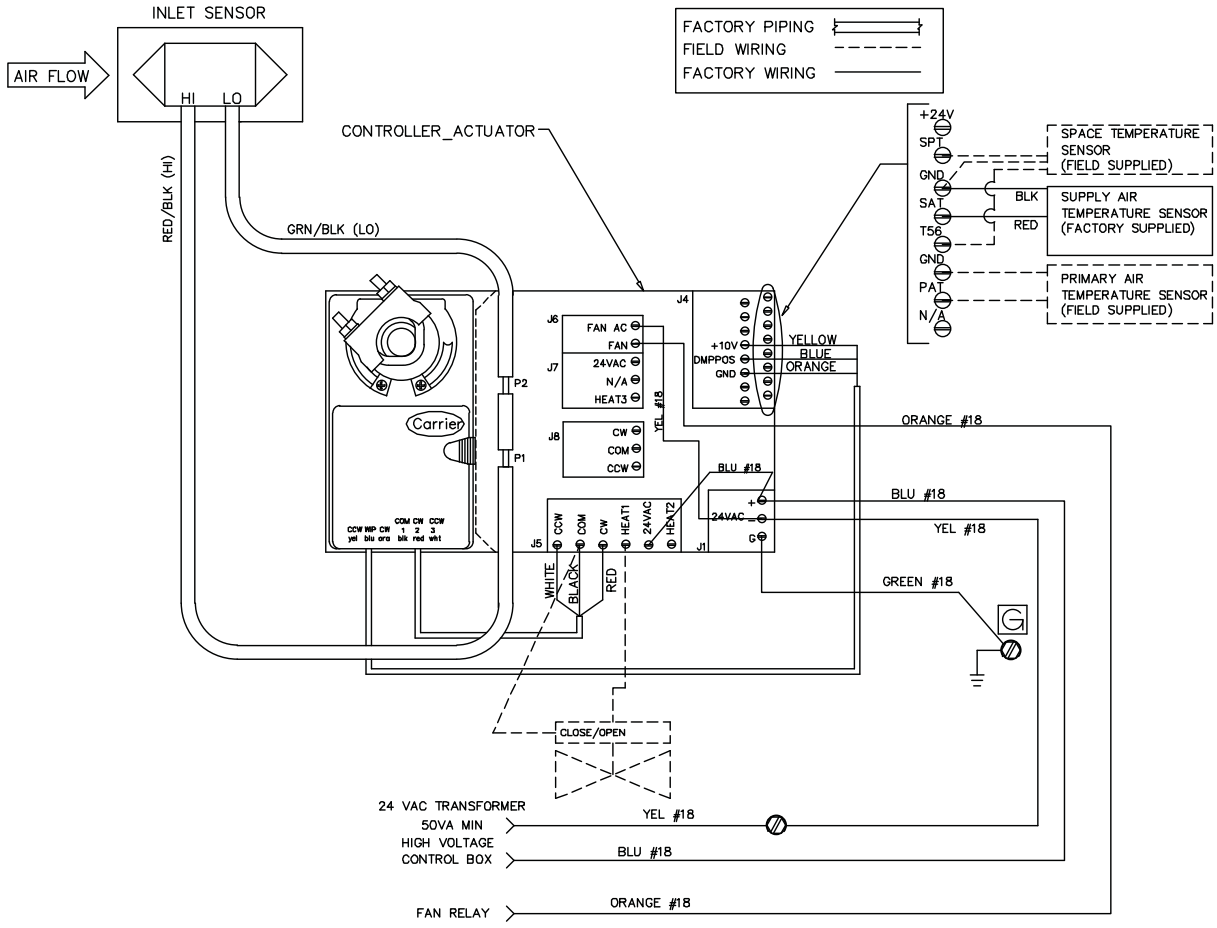

Notes:

1. For 45J/K/Q units the Actuator is configured CW to close.

2. CAUTION:
   Electric shock may result. Disconnect unit prior to servicing unit.
3. These controls have been wired to comply with UL-1995.

PRODUCT INFORMATION IS SUBJECT TO CHANGE WITHOUT NOTICE.

JOB NAME	JOB NUMBER	LOCATION	PAGE NUMBER	DRAWING NUMBER
BUYER	BUYER #	SHEET	4 OF 4	45J/K/Q-C-4443

CODE CATALOG #	Carrier A United Technologies Company	THIS DOCUMENT IS THE PROPERTY OF CARRIER CORPORATION AND IS DELIVERED UPON THE EXPRESS CONDITION THAT THE CONTENTS WILL NOT BE DISCLOSED OR USED WITHOUT CARRIER CORPORATION'S WRITTEN CONSENT	SUBMISSION OF THESE DRAWINGS OR DOCUMENTS DOES NOT CONSTITUTE PART PERFORMANCE OR ACCEPTANCE OF CONTRACT	ComfortID™ CONSTANT VOLUME FAN	45 JC,KC,QC

ComfortID™ CONSTANT VOLUME FAN—WITH PROPORTIONAL (FLOATING) HOT WATER HEAT CARRIER CONTROL PACKAGE NO. 4444

Application:

Fan powered constant volume terminals are designed to provide heating and cooling for perimeter zones. These terminals are also used in interior zones, where a constant volume of air (consisting of a combination of primary air mixed with recirculated air) provides the required air movement. A typical application is shown in Fig. 1. Design, load requirements, downstream (external) static pressure, fan performance and sound level acceptability govern terminal selection and sizing. The terminal fan performance is selected to provide sufficient pressure to overcome the coil pressure drop and external static pressure, permitting the use of smaller, more energy efficient primary air fan systems. (It is important that the correct fan and fan speed be selected to ensure that sufficient Btu's can be delivered to meet the heating and cooling load requirements.)The controls provide variable air volume (VAV) control of the primary air for cooling and operate a modulating hot water valve connected to a heating coil to supplement fan induced plenum heat during heating. As the primary airflow is reduced, the fan induces air from the plenum to provide a constant volume of air to the zone. A wall-mounted space temperature (SPT) sensor located in each zone will sense load requirements and activate the control sequence to accommodate cooling or heating. The control provides a fan start-up sequence to ensure proper rotation of the terminal's fan. Whenever the primary air source begins operation, the control will initiate the fan start-up sequence. Each control will provide a delay that is dependent on the control's address, before initiating the sequence. The delay prevents multiple terminals from performing the sequence simultaneously. The sequence will close the primary air damper fully to stop the primary airflow and allow the fan wheel to stop rotating, then will energize the terminal fan. The damper will then modulate to provide the primary airflow as required by the specific sequence of operation. This control package provides the following sequences of operations:

A. Cooling: (refer to numbers on flow diagram). See Fig. 2.
   1. 1-2 indicates that maximum primary airflow is established by the user-defined maximum cooling airflow set point until the zone comes under control at 2.
   2. Beginning at 2, the primary airflow is regulated over a throttling range by the damper until the minimum cooling airflow set point is reached at 3. The minimum cooling airflow set point can be set to zero by the user. In this case, the damper will fully close if the zone temperature continues to fall. As the primary airflow is reduced, the fan induces ceiling plenum air to maintain a constant air volume to the zone.
   3. 3-4 indicates that, should the zone temperature continue to fall, the damper will hold the user-defined minimum cooling airflow set point.

B. Auxiliary hot water heating: (when the primary air source is cooling, refer to numbers on flow diagram). See Fig. 2. The installer is responsible for proper selection of the fan speed to provide sufficient airflow through the heating coil.

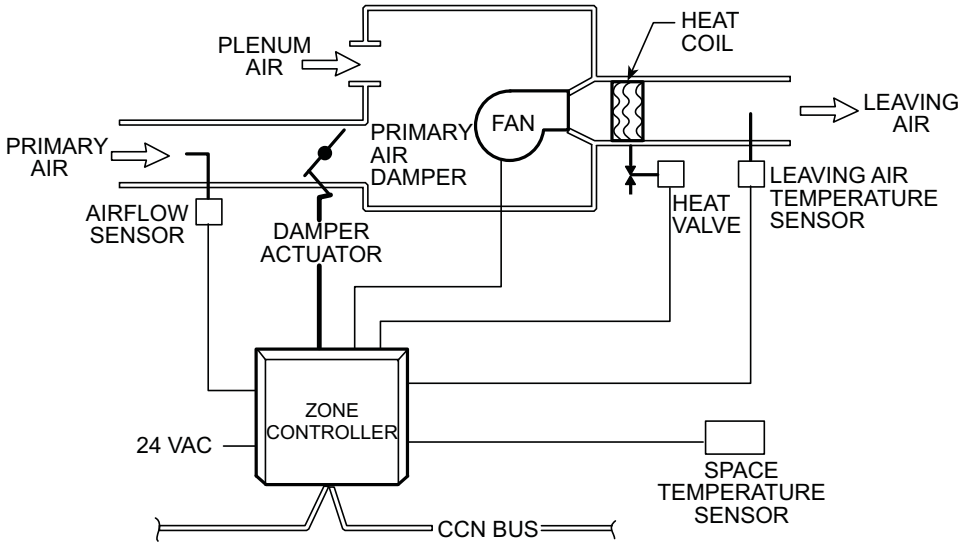

Figure 1 - Series Fan Powered Air Terminal With Proportional Hot Water Heat

PRODUCT INFORMATION IS SUBJECT TO CHANGE WITHOUT NOTICE. 01/30/2003

JOB NAME	JOB NUMBER	LOCATION	PAGE NUMBER	DRAWING NUMBER
BUYER	BUYER #	SHEET	1 OF 4	45J/K/Q-C-4444

1. Should the zone temperature fall below the occupied heating set point, the Occupied Heating mode is in effect at 4.
2. At 5, the hot water valve will modulate open as required to provide heating and satisfy the load requirements. The valve is controlled so as not to exceed the maximum discharge temperature limit. The primary airflow is maintain at the user-defined minimum cooling airflow set point.
3. When the zone temperature rises above the occupied heating set point, the valve modulates closed and the Ventilation mode is reactivated at 4.

C. Heating: (when the primary air source is providing heated air, refer to numbers on flow diagram). See Fig. 2.

1. Upon receiving a heating signal generated by the air source equipped with CCN controls (or a primary air temperature sensor is installed to detect that the air source is heating), should the zone temperature fall below the occupied heating set point, the Heating mode is in effect at 4'.
2. The primary air damper is throttled between the user-defined minimum heating airflow set point at 4' and the user-defined maximum heating airflow set point at 6. The hot water valve modulates as required to supplement the temperature of the mixture of induced plenum air and heated primary air. The valve is controlled so as not to exceed the maximum discharge temperature.
3. The control may be configured to provide minimum primary airflow during heating. In that case the primary air damper will maintain the minimum heating airflow set point at 4' to provide ventilation air to the zone. The hot water valve will modulate as required to condition the discharge air to meet the zone's heating requirements. The valve is controlled so as not to exceed the maximum discharge temperature.

D. Unoccupied time period: (cooling)
When the unoccupied period is reached, the user-defined occupied cooling set point is reset upward to a user-defined unoccupied cooling set point. If the primary air source is operating, the primary air damper will throttle in the same manner (as per A) during the unoccupied period, using the unoccupied cooling set point. If the primary air source was not previously operating, the control will initiate the fan start-up sequence and enable the fan before modulating the primary air damper. If the primary air source is not operating, then the fan will remain off.

E. Unoccupied time period: (auxiliary hot water heating)
When the unoccupied period is reached, the user-defined occupied heating set point is reset downward to a user-defined unoccupied heating set point. If the primary air source is not operating and the zone's temperature is below the unoccupied heating set point, the Unoccupied Heating mode is in effect.The primary air damper will fully close and the terminal fan will start. The hot water valve will modulate as required to supplement the plenum air heat. When the zone's temperature rises above the unoccupied heating set point, the valve will modulate closed and the fan will stop after the user-specified fan delay has expired. The primary air damper will then be returned to a 50% open position to allow the primary air source to properly start.

F. Unoccupied time period: (heating)
When the unoccupied period is reached, the user-defined occupied heating set point is reset downward to a user-defined unoccupied heating set point. If the primary air source is operating, the primary air damper will operate in the same manner (as per C) during the unoccupied period, using the unoccupied heating set point. The hot water valve will modulate as required to supplement the temperature of the mixture of induced plenum air and primary air. If the primary air source was not previously operating, the

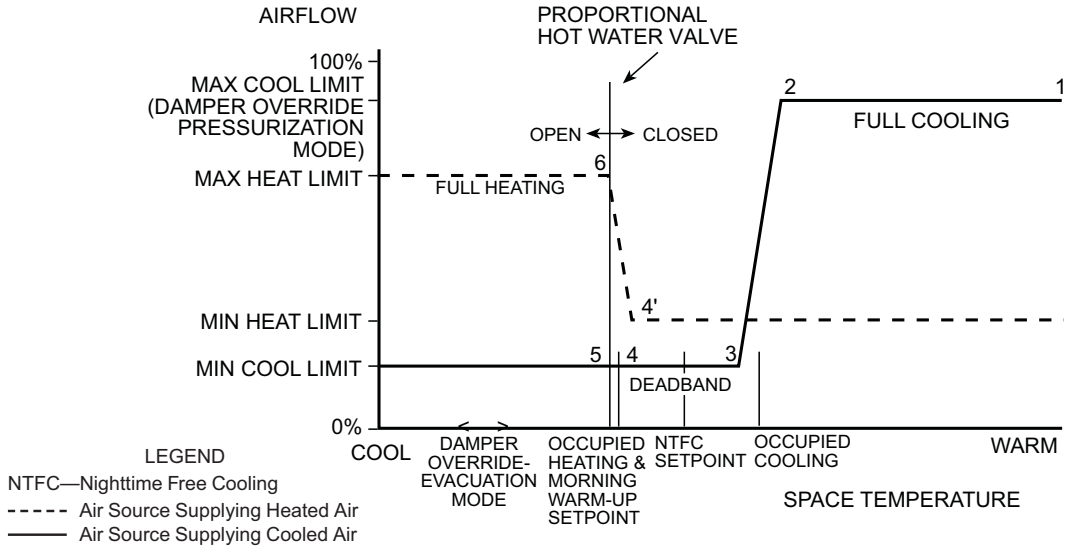

Figure 2 - Sequence of Operation for Series Fan Powered Air Terminal With Proportional Hot Water Heat

JOB NAME	JOB NUMBER	LOCATION	PAGE NUMBER	DRAWING NUMBER
BUYER	BUYER #	SHEET	2 OF 4	45J/K/Q-C-4444

control will initiate the fan start-up sequence and enable the fan before modulating the primary air damper. If the primary air source is not operating and the zone temperature is above the unoccupied heating set point, then the fan will remain off.

G. Morning warm-up: Units configured to provide variable volume heating
Upon receiving a morning warm-up signal generated by the air source equipped with CCN controls, the control will initiate the fan start-up sequence and enable the fan. After the fan is operating, the damper will go to the maximum heating airflow set point if the zone temperature is below the occupied heating set point at 6. The hot water valve will modulate as required to supplement the temperature of the air and controlled so as not exceed the maximum discharge temperature. As the zone temperature rises above the occupied heating set point, the hot water valve will modulate close and the primary airflow will be reduced to the minimum heating airflow set point at 4'.

H. Demand controlled ventilation (option):
This mode is initiated when the zone is occupied and the air source is not heating. It occurs when the CCN control receives a cooling signal from the air source equipped with CCN controls, or when a primary air temperature sensor is installed to detect the air source operation is cooling. The control will monitor a CO_2 sensor (optional) and determine if ventilation is adequate. The zone CO_2 level is compared to the ventilation set point. If the CO_2 level is above the set point (insufficient ventilation), the airflow set point is increased appropriately to maintain proper ventilation. Should the zone's temperature fall below the heating set point, the control will suspend ventilation override until the zone's temperature recovers. If after supplying plenum heat for the user-specified heat delay, the heat was insufficient to raise the zone's temperature, then heating will be enabled and will operate as per B.

I. Humidity control (option):
This mode is initiated when the zone is occupied and the primary air source is cooling. It occurs when the CCN control receives a cooling signal from the air source equipped with CCN controls, or when a primary air temperature sensor is installed to detect the air source operation is cooling. The control will monitor a relative humidity (RH) sensor (optional) and determine if the zone's RH is above the humidity set point. If the RH level is above the RH set point, the airflow control point is increased to displace the humid air in the space with air from the primary air source (which has a lower dew point). To ensure non-simultaneous operation of both heating and cooling, should the increased airflow cause the zone's temperature to fall below the heating set point, the control will first suspend the airflow override and reduce the airflow to the minimum cooling set point. This will cause the fan to induce plenum air heat to warm the zone. If after supplying plenum heat for the user-specified heat delay the heat was insufficient to raise the zone's temperature, then heating will be enabled and will operate as per B. The airflow override will resume when the zone's temperature recovers and be disabled once the zone's RH level falls below the zone's RH set point.

J. Damper override:
The damper override function is energized through the use of a field-supplied smoke control panel connected to the air source equipped with CCN controls. The smoke control panel and installation must be in accordance with UL864 and local codes. The damper override function overrides the airflow setting used by the logic. It will cause the terminal to operate the fan and provide the configured maximum cooling airflow when the air source is in the Pressurization mode, and to disable the fan and fully close the primary air damper when the air source is in the Evacuation mode.

K. Nighttime free cooling:
The logic calculates a nighttime free cooling (NTFC) temperature set point halfway between the occupied heating and occupied cooling temperature set points. Upon receiving a NTFC signal generated by the air source equipped with CCN controls (or a primary air temperature sensor is installed to detect the air source is operating in the NTFC mode), the control will initiate the fan start-up sequence. Once the fan is operating, the primary air damper will modulate and throttle between the maximum and minimum cooling airflow set points to maintain the zone's NTFC temperature set point.

L. Primary air source shuts off:
1. The fan will be disabled unless the zone temperature falls below the heating set point (refer to E).
2. The damper will fully close and the control will recalibrate the airflow transducer.
3. If the primary air source remains off (no primary air), the damper will be repositioned to 50% open to allow the air source to restart.

JOB NAME	JOB NUMBER	LOCATION	PAGE NUMBER	DRAWING NUMBER
BUYER	BUYER #	SHEET	3 OF 4	45J/K/Q-C-4444

CODE	Carrier A United Technologies Company	THIS DOCUMENT IS THE PROPERTY OF CARRIER CORPORATION AND IS DELIVERED UPON THE EXPRESS CONDITION THAT THE CONTENTS WILL NOT BE DISCLOSED OR USED WITHOUT CARRIER CORPORATION'S WRITTEN CONSENT	SUBMISSION OF THESE DRAWINGS OR DOCUMENTS DOES NOT CONSTITUTE PART PERFORMANCE OR ACCEPTANCE OF CONTRACT	ComfortID™ CONSTANT VOLUME FAN	45 JC,KC,QC
CATALOG #					

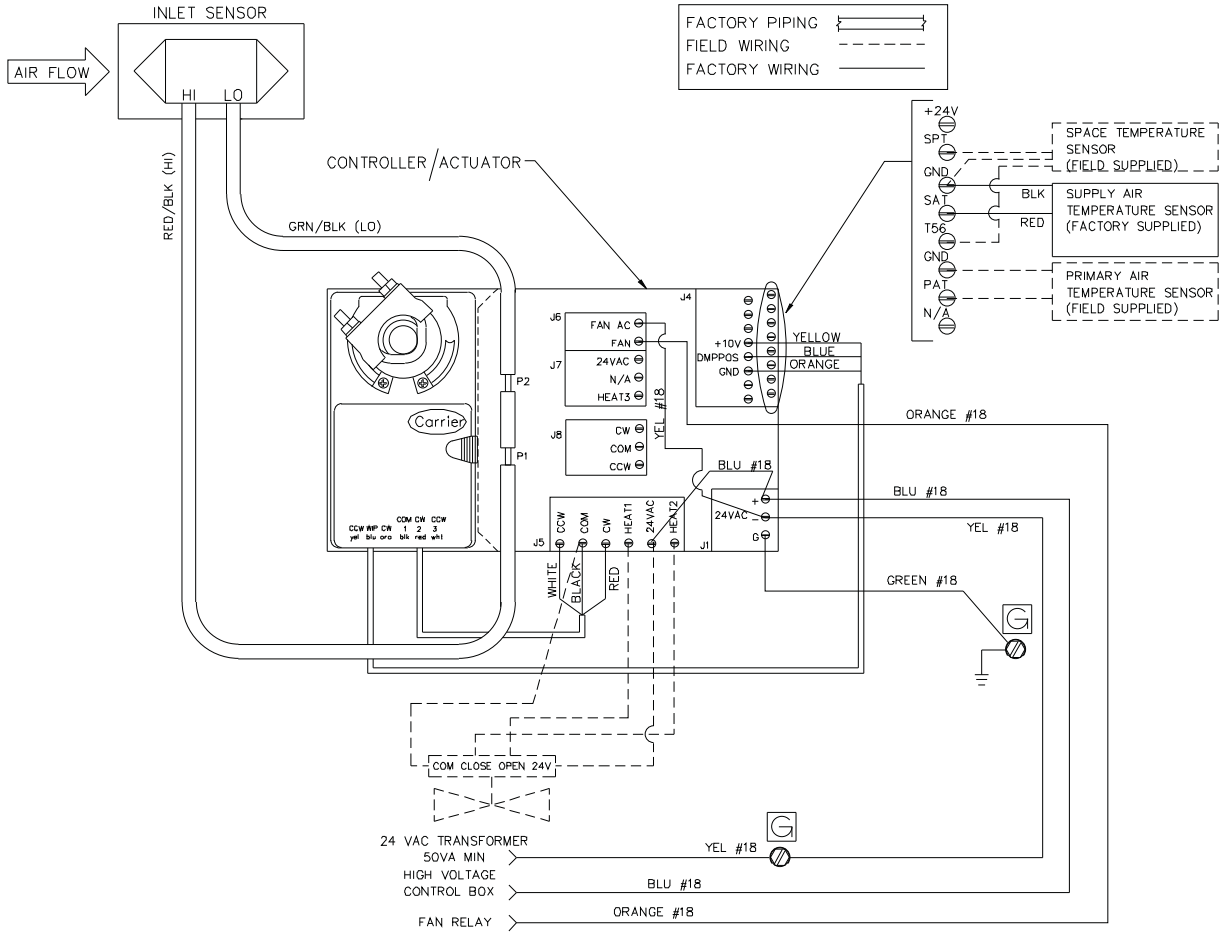

Notes:

1. For 45J/K/Q units the Actuator is configured CW to close.

2. CAUTION:
   Electric shock may result. Disconnect unit prior to servicing unit.
3. These controls have been wired to comply with UL-1995.

PRODUCT INFORMATION IS SUBJECT TO CHANGE WITHOUT NOTICE.

JOB NAME	JOB NUMBER	LOCATION	PAGE NUMBER	DRAWING NUMBER
BUYER	BUYER #	SHEET	4 OF 4	45J/K/Q-C-4444

CODE CATALOG #	Carrier A United Technologies Company	THIS DOCUMENT IS THE PROPERTY OF CARRIER CORPORATION AND IS DELIVERED UPON THE EXPRESS CONDITION THAT THE CONTENTS WILL NOT BE DISCLOSED OR USED WITHOUT CARRIER CORPORATION'S WRITTEN CONSENT.	SUBMISSION OF THESE DRAWINGS OR DOCUMENTS DOES NOT CONSTITUTE PART PERFORMANCE OR ACCEPTANCE OF CONTRACT.	ComfortID™ CONSTANT VOLUME FAN	45 JC,KC,QC

ComfortID™ CONSTANT VOLUME FAN POWERED TERMINAL UNIT CONTROL CARRIER CONTROL PACKAGE NO. 4452

Cooling with 3-Stage Field-Installed Electric Heat

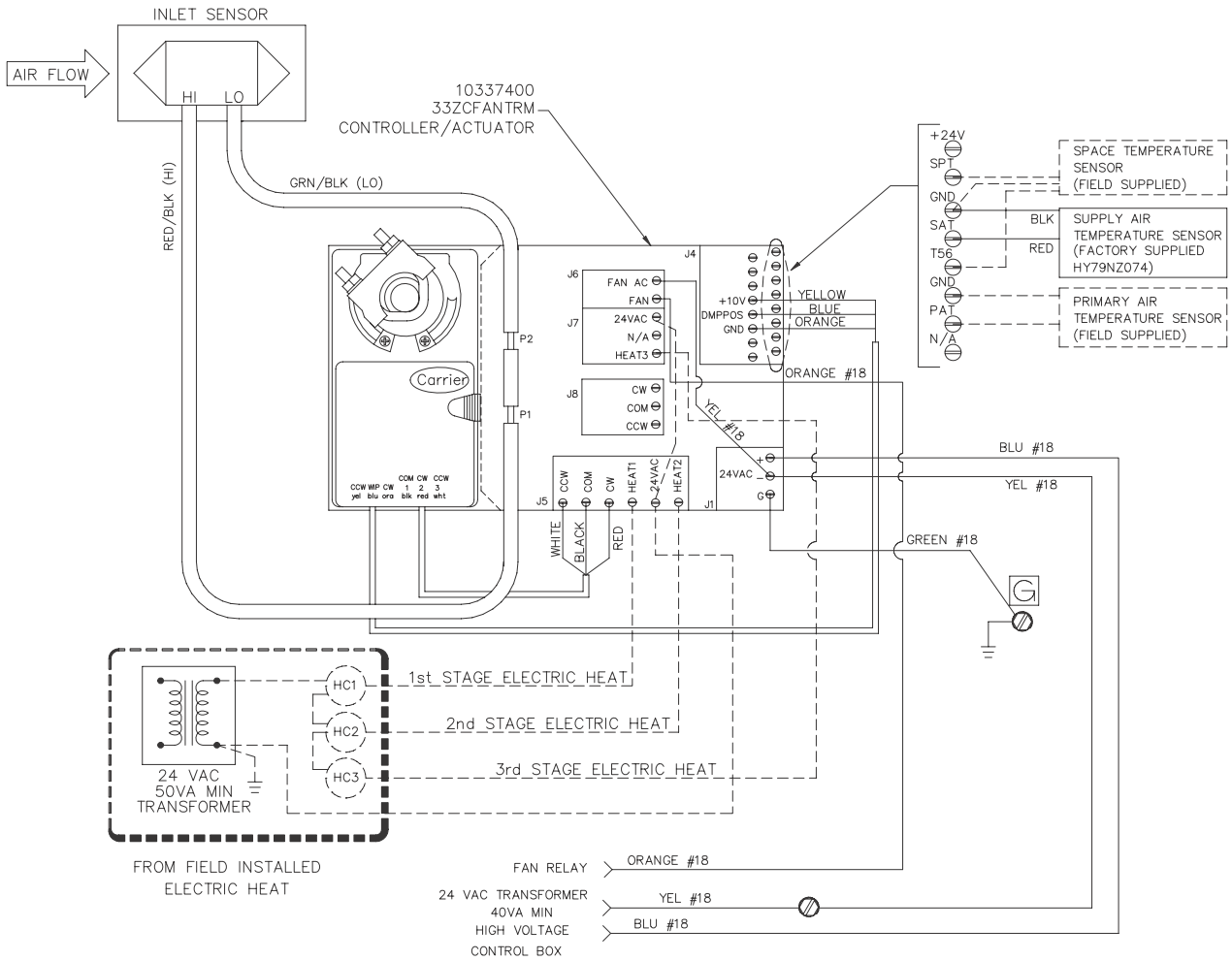

NOTES:
1. These controls have been wired to comply with UL-1995.
2. Use insulated quick connects.
3. Disconnect unit prior to servicing. Electric shock may result.
4. Verify actuator bushing is in the full clockwise position. Rotate damper clockwise to the fully closed position. Mount actuator over damper shaft and secure to shaft enclosure. Engage clutch and rotate damper counterclockwise to the fully open position.

FACTORY PIPING
FIELD WIRING
FACTORY WIRING

PRODUCT INFORMATION IS SUBJECT TO CHANGE WITHOUT NOTICE. 02/15/2009

JOB NAME	JOB NUMBER	LOCATION	PAGE NUMBER	DRAWING NUMBER
BUYER	BUYER #	SHEET	1 OF 1	45J/K/Q-C-4452

CODE CATALOG #	Carrier A United Technologies Company	THIS DOCUMENT IS THE PROPERTY OF CARRIER CORPORATION AND IS DELIVERED UPON THE EXPRESS CONDITION THAT THE CONTENTS WILL NOT BE DISCLOSED OR USED WITHOUT CARRIER CORPORATION'S WRITTEN CONSENT.	SUBMISSION OF THESE DRAWINGS OR DOCUMENTS DOES NOT CONSTITUTE PART PERFORMANCE OR ACCEPTANCE OF CONTRACT.	ComfortID™ CONSTANT VOLUME FAN	45 JC,KC, QC

ComfortID™ CONSTANT VOLUME FAN—WITH PROPORTIONAL SOLID-STATE RELAY (SSR) ELECTRIC HEAT

CARRIER CONTROL PACKAGE NO. 4454

Application:

Fan powered constant volume terminals are designed to provide heating and cooling for perimeter zones. These terminals are also used in interior zones, where a constant volume of air (consisting of a combination of primary air mixed with recirculated air) provides the required air movement. A typical application is shown in Fig. 1. Design, load requirements, downstream (external) static pressure, fan performance and sound level acceptability govern terminal selection and sizing. The terminal fan performance is selected to provide sufficient pressure to overcome the coil pressure drop and external static pressure, permitting the use of smaller, more energy efficient primary air fan systems. (It is important that the correct fan and fan speed be selected to ensure that sufficient airflow is available for the electric heat coil.) The controls provide variable air volume (VAV) control of the primary air for cooling and operate a proportional electric heating coil to supplement fan-induced plenum heat during heating. As the primary airflow is reduced, the fan induces air from the plenum to provide a constant volume of air to the zone. A wall-mounted space temperature (SPT) sensor located in each zone will sense load requirements and activate the control sequence to accommodate cooling or heating. The control provides a fan start-up sequence to ensure proper rotation of the terminal's fan. Whenever the primary air source begins operation, the control will initiate the fan start-up sequence. Each control will provide a delay that is dependent on the control's address, before initiating the sequence. The delay prevents multiple terminals from performing the sequence simultaneously. The sequence will close the primary air damper fully to stop the primary airflow and allow the fan wheel to stop rotating, then will energize the terminal fan. The damper will then modulate to provide the primary airflow as required by the specific sequence of operation. This control package provides the following sequences of operations:

A. Cooling:

   Refer to numbers on flow diagram. See Fig. 2.

   1. Between 1 and 2 maximum primary airflow is established by the user-defined maximum cooling airflow set point until the zone comes under control at 2.
   2. Beginning at 2, the primary airflow is regulated over a throttling range by the damper until the minimum cooling airflow set point is reached at 3. The minimum cooling airflow set point can be set to zero by the user. In this case, the damper will fully close if the zone temperature continues to fall. As the primary airflow is reduced, the fan induces ceiling plenum air to maintain a constant air volume to the zone.
   3. Between 3 and 4, should the zone temperature continue to fall, the damper will hold the user-defined minimum cooling airflow set point.

B. Auxiliary electric heating when the primary air source is cooling:

   Refer to numbers on flow diagram. See Fig. 2.

   The installer is responsible for proper selection of the fan speed to provide sufficient airflow through the heating coil.

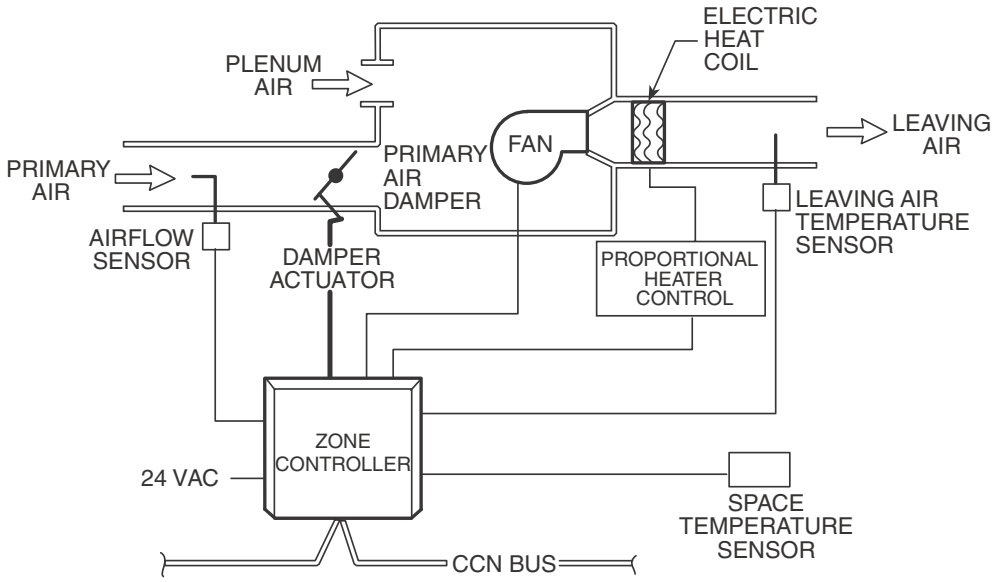

Figure 1 — Series Fan Powered Air Terminal with Proportional Electric Heat

PRODUCT INFORMATION IS SUBJECT TO CHANGE WITHOUT NOTICE. 06/15/2007

JOB NAME	JOB NUMBER	LOCATION	PAGE NUMBER	DRAWING NUMBER
BUYER	BUYER #	SHEET	1 OF 4	45J/K/Q-C-4454

1. Should the zone temperature fall below the occupied heating set point, the Occupied Heating mode is in effect at 4.
2. At 5, the electric heater output increases as required to provide heating and satisfy the load requirements. The heater is controlled so as not to exceed the maximum discharge temperature limit. The primary airflow is maintain at the user-defined minimum cooling airflow set point.
3. When the zone temperature rises above the occupied heating set point, the heater output is reduced to zero and the Ventilation mode is activated at 4.

C. Heating when the primary air source is providing heated air:

Refer to numbers on flow diagram. See Fig. 2.

1. Upon receiving a heating signal generated by the air source equipped with CCN (Carrier Comfort Network®) controls (or a primary air temperature sensor is installed to detect that the air source is heating), should the zone temperature fall below the occupied heating set point, the Heating mode is in effect at 4'.
2. The primary air damper is throttled between the user-defined minimum heating airflow set point at 4' and the user-defined maximum heating airflow set point at 6. The proportional electric heat modulates as required to supplement the temperature of the mixture of induced plenum air and heated primary air. The heater is controlled so as not to exceed the maximum discharge temperature.
3. The control may be configured to provide minimum primary airflow during heating. In that case the primary air damper will maintain the minimum heating airflow set point at 4' to provide ventilation air to the zone. The proportional electric heat will modulate as required to condition the discharge air to meet the zone's heating requirements. The heater is controlled so as not to exceed the maximum discharge temperature.

D. Unoccupied time period (cooling):

When the unoccupied period is reached, the user-defined occupied cooling set point is reset upward to a user-defined unoccupied cooling set point. If the primary air source is operating, the primary air damper will throttle in the same manner (as per A) during the unoccupied period, using the unoccupied cooling set point. If the primary air source was not previously operating, the control will initiate the fan start-up sequence and enable the fan before modulating the primary air damper. If the primary air source is not operating, then the fan will remain off.

E. Unoccupied time period (auxiliary electric heating):

When the unoccupied period is reached, the user-defined occupied heating set point is reset downward to a user-defined unoccupied heating set point. If the primary air source is not operating and the zone's temperature is below the unoccupied heating set point, the Unoccupied Heating mode is in effect. The primary air damper will fully close and the terminal fan will start. The proportional electric heat will modulate as required to supplement the plenum air heat. When the zone's temperature rises above the unoccupied heating set point, the heater output will be reduced to zero and the fan will stop after the user-specified fan delay has expired. The primary air damper will then be returned to at least a 50% open position to allow the primary air source to properly start.

F. Unoccupied time period (heating):

When the unoccupied period is reached, the user-defined occupied heating set point is reset downward to a user-defined unoccupied heating set point. If the primary air source is operating, the primary air damper will operate in the same manner (as per C) during the unoccupied period, using the unoccupied heating set point. The hot water valve will modulate as required to supplement the temperature of the mixture of induced plenum air and primary air. If the primary air source was not

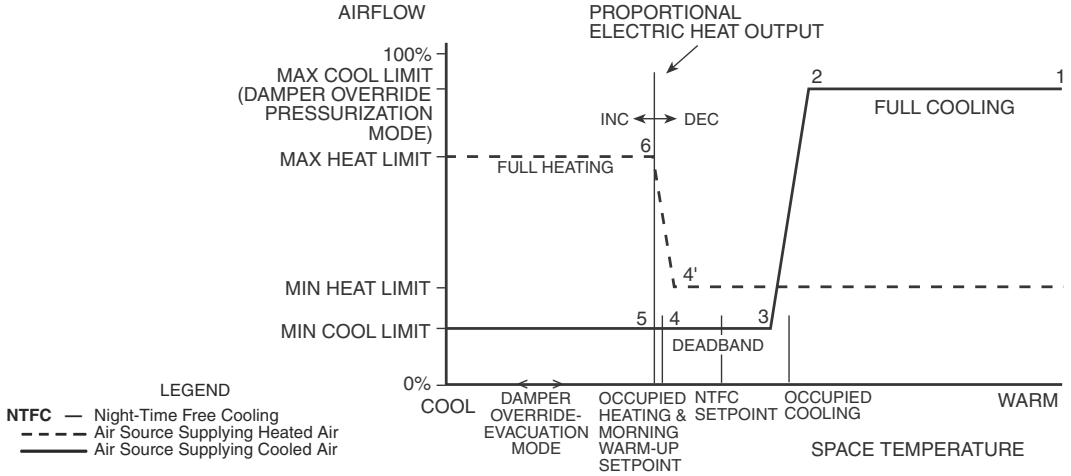

Figure 2 — Sequence of Operation for Series Fan Powered Air Terminal with Proportional Electric Heat

previously operating, the control will initiate the fan start-up sequence and enable the fan before modulating the primary air damper. If the primary air source is not operating and the zone temperature is above the unoccupied heating set point, then the fan will remain off.

G. Morning warm-up (units configured to provide variable volume heating):

Upon receiving a morning warm-up signal generated by the air source equipped with CCN controls, the control will initiate the fan start-up sequence and enable the fan. After the fan is operating, the damper will go to the maximum heating airflow set point if the zone temperature is below the occupied heating set point at 6. The proportional electric heat will modulate as required to supplement the temperature of the air and controlled so as not exceed the maximum discharge temperature. As the zone temperature rises above the occupied heating set point, the heater output will be reduced to zero and the primary airflow will be reduced to the minimum heating airflow set point at 4'.

H. Demand controlled ventilation (option):

This mode is initiated when the zone is occupied and the air source is not heating. It occurs when the CCN control receives a cooling signal from the air source equipped with CCN controls, or when a primary air temperature sensor is installed to detect the air source operation is cooling. The control will monitor a CO_2 sensor (optional) and determine if ventilation is adequate. The zone CO_2 level is compared to the ventilation set point. If the CO_2 level is above the set point (insufficient ventilation), the airflow set point is increased appropriately to maintain proper ventilation. Should the zone's temperature fall below the heating set point, the control will suspend ventilation override until the zone's temperature recovers. If after supplying plenum heat for the user-specified heat delay, the heat was insufficient to raise the zone's temperature, then heating will be enabled and will operate as per B.

I. Humidity control (option):

This mode is initiated when the zone is occupied and the primary air source is cooling. It occurs when the CCN control receives a cooling signal from the air source equipped with CCN controls, or when a primary air temperature sensor is installed to detect the air source operation is cooling. The control will monitor a relative humidity (RH) sensor (optional) and determine if the zone's RH is above the humidity set point. If the RH level is above the RH set point, the airflow control point is increased to displace the humid air in the space with air from the primary air source (which has a lower dew point).To ensure non-simultaneous operation of both heating and cooling, should the increased airflow cause the zone's temperature to fall below the heating set point, the control will first suspend the airflow override and reduce the airflow to the minimum cooling set point. This will cause the fan to induce plenum air heat to warm the zone. If after supplying plenum heat for the user-specified heat delay the heat was insufficient to raise the zone's temperature, then heating will be enabled and will operate as per B.The airflow override will resume when the zone's temperature recovers and be disabled once the zone's RH level falls below the zone's RH set point.

J. Damper override:

The damper override function is energized through the use of a field-supplied smoke control panel connected to the air source equipped with CCN controls. The smoke control panel and installation must be in accordance with UL864 and local codes. The damper override function overrides the airflow setting used by the logic. It will cause the terminal to operate the fan and provide the configured maximum cooling airflow when the air source is in the Pressurization mode, and to disable the fan and fully close the primary air damper when the air source is in the Evacuation mode.

K. Nighttime free cooling:

The logic calculates a nighttime free cooling (NTFC) temperature set point halfway between the occupied heating and occupied cooling temperature set points. Upon receiving a NTFC signal generated by the air source equipped with CCN controls (or a primary air temperature sensor is installed to detect the air source is operating in the NTFC mode), the control will initiate the fan start-up sequence. Once the fan is operating, the primary air damper will modulate and throttle between the maximum and minimum cooling airflow set points to maintain the zone's NTFC temperature set point.

L. Primary air source shuts off:

1. The fan will be disabled unless the zone temperature falls below the heating set point (refer to E).
2. The damper will fully close and the control will recalibrate the airflow transducer.
3. If the primary air source remains off (no primary air), the damper will be repositioned to 50% open to allow the air source to restart.

CODE	Carrier A United Technologies Company	THIS DOCUMENT IS THE PROPERTY OF CARRIER CORPORATION AND IS DELIVERED UPON THE EXPRESS CONDITION THAT THE CONTENTS WILL NOT BE DISCLOSED OR USED WITHOUT CARRIER CORPORATION'S WRITTEN CONSENT.	SUBMISSION OF THESE DRAWINGS OR DOCUMENTS DOES NOT CONSTITUTE PART PERFORMANCE OR ACCEPTANCE OF CONTRACT.	ComfortID™ CONSTANT VOLUME FAN	45 JC,KC, QC
CATALOG #					

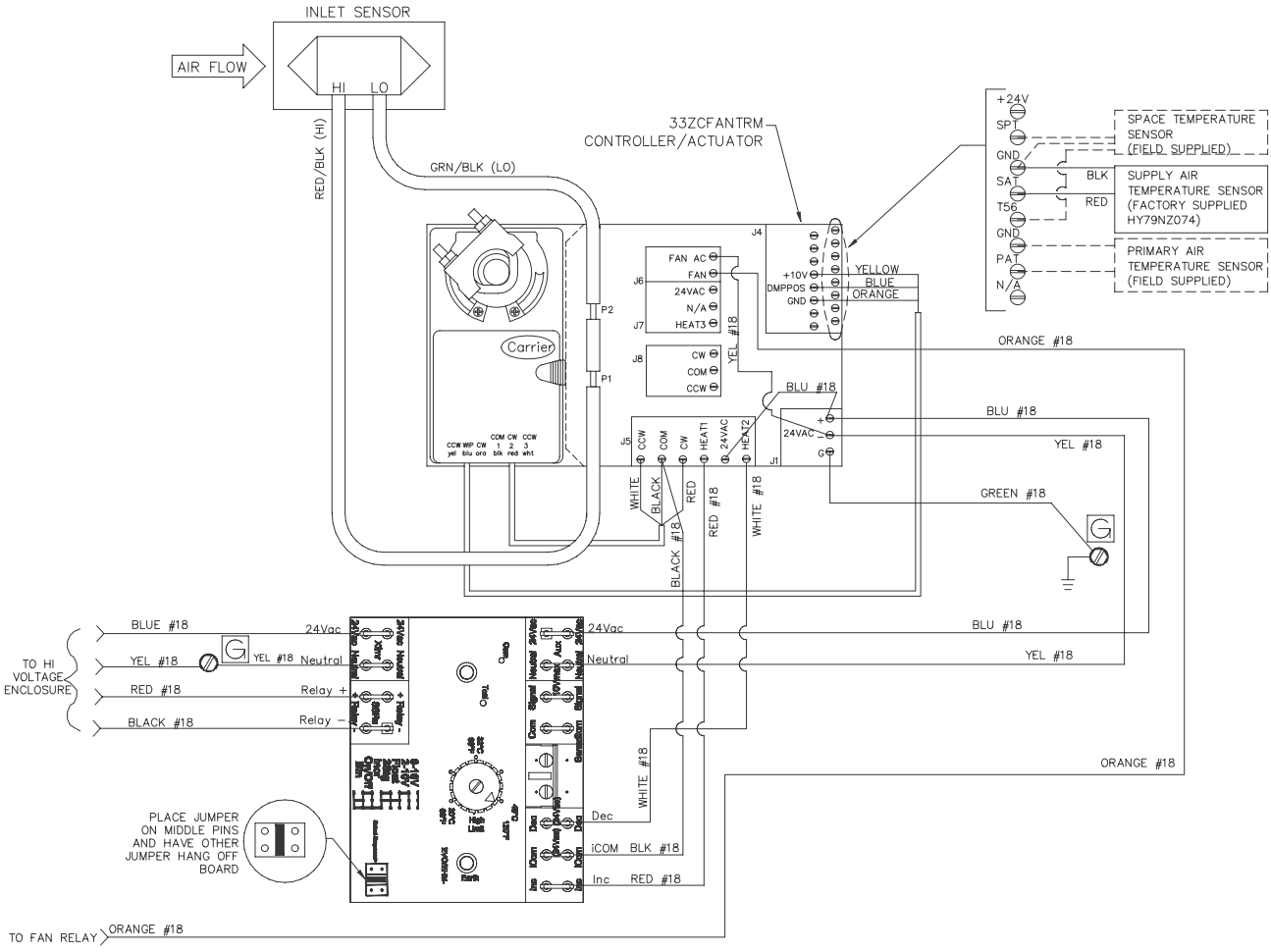

LEGEND

CCW	—	Counterclockwise
COM	—	Common
CW	—	Clockwise
DMPPOS	—	Damper Position
GND	—	Ground
PAT	—	Primary Air Temperature Sensor
SAT	—	Supply Air Temperature Sensor
SPT	—	Space Temperature Sensor
- - - -		Field Wiring
———		Factory Wiring

NOTES:

1. For 45J/K units, the actuator is configured CW to close. For 45Q units, the configuration is CCW to close.
2. CAUTION: Electric shock may result. Disconnect prior to servicing unit.
3. These controls have been wired to comply with UL-1995.

PRODUCT INFORMATION IS SUBJECT TO CHANGE WITHOUT NOTICE. 06/15/2007

JOB NAME	JOB NUMBER	LOCATION	PAGE NUMBER	DRAWING NUMBER
BUYER	BUYER #	SHEET	4 OF 4	45J/K/Q-C-4454

CODE CATALOG #	Carrier A United Technologies Company	THIS DOCUMENT IS THE PROPERTY OF CARRIER CORPORATION AND IS DELIVERED UPON THE EXPRESS CONDITION THAT THE CONTENTS WILL NOT BE DISCLOSED OR USED WITHOUT CARRIER CORPORATION'S WRITTEN CONSENT	SUBMISSION OF THESE DRAWINGS OR DOCUMENTS DOES NOT CONSTITUTE PART PERFORMANCE OR ACCEPTANCE OF CONTRACT	ComfortID™ INTERMITTENT FAN	45 MC,NC,RC

ComfortID™ INTERMITTENT FAN POWERED—WITHOUT HEAT CARRIER CONTROL PACKAGE NO. 4740

Application:

Intermittent fan powered terminals are designed to provide heating and cooling for perimeter zones. These terminals are also used in interior zones, where a combination of primary air mixed with recirculated air provides increased air movement and improved ventilation. A typical application is shown in Fig. 1. Design, load requirements, downstream (external) static pressure, fan performance and sound level acceptability govern terminal selection and sizing. The controls provide variable air volume (VAV) control of the primary air during cooling and heating. When the primary air source is cooling, should the zone require heat, the fan operates to draw in air from the ceiling plenum to provide heat to the zone (the fan set point is set to a CFM value slightly above the minimum cooling CFM set point.) These terminals require low inlet static pressure, permitting the use of smaller, more energy efficient primary air fan systems. A wall-mounted space temperature (SPT) sensor located in each zone will sense load requirements and activate the control sequence to accommodate cooling or heating. The control operates the fan during cooling when the zone's cooling load falls below a user-adjustable minimum airflow set point. This feature prevents cold air 'dumping' from the diffusers, while providing improved ventilation at a lower minimum airflow. This control package provides the following sequences of operations:

A. Cooling: (refer to numbers on flow diagram). See Fig. 2.
   1. 1-2 indicates that maximum primary airflow is established by the user-defined maximum cooling airflow set point until the zone comes under control at 2. The fan is disabled.
   2. Beginning at 2, the primary airflow is regulated over a throttling range by the damper until the minimum cooling airflow set point is reached at 3. (It must be noted that the minimum cooling airflow set point could be set to zero by the user. In this case, the damper will fully close if the zone temperature continues to fall.) As the primary airflow is reduced, the fan will operate to increase air circulation and improve ventilation when the primary airflow falls below the user-defined airflow set point.
   3. 3-4 indicates that, should the zone temperature continue to fall, the damper will hold the user-defined minimum cooling airflow set point.

B. Heating: (when the primary air source is providing heated air, refer to numbers on flow diagram). See Fig. 2.
   1. Upon receiving a heating signal generated by the air source equipped with CCN controls (or a primary air temperature sensor is installed to detect that the air source is heating), should the zone temperature fall below the occupied heating set point, the Heating mode is in effect at 4'.
   2. The damper is throttled between the user-defined minimum heating airflow set point at 4' and the user-defined maximum heating airflow set point at 6. The fan remains off during this cycle.
   3. The control may be configured to provide constant volume heating. In that case the damper will maintain the minimum heating airflow set point at 4' to supply a constant volume of heated air to the zone.

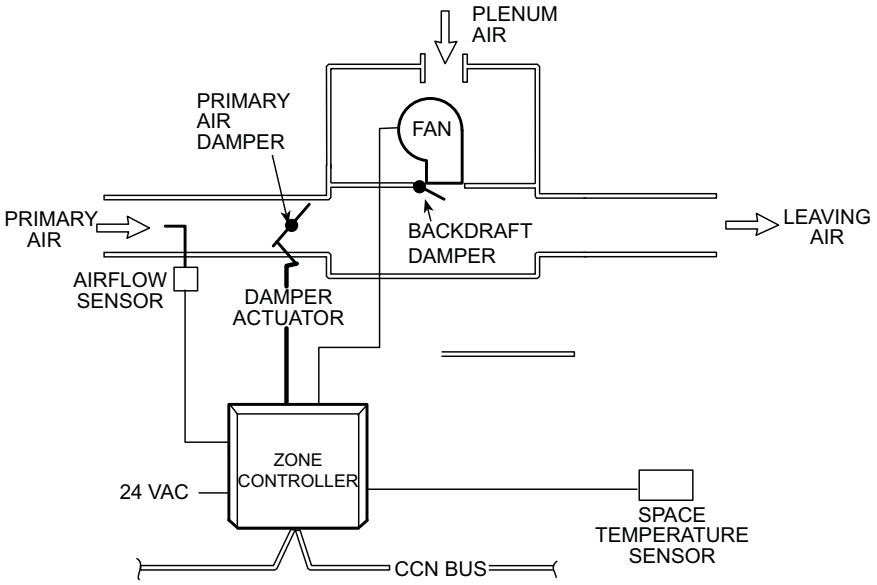

Figure 1 - Intermittent Fan Powered Air Terminal—Without Heat

PRODUCT INFORMATION IS SUBJECT TO CHANGE WITHOUT NOTICE. 01/30/2003

JOB NAME	JOB NUMBER	LOCATION	PAGE NUMBER	DRAWING NUMBER
BUYER	BUYER #	SHEET	1 OF 4	45M/N/R-C-4740

C. Morning warm-up: (configured to provide variable volume heating)
Upon receiving a morning warm-up signal generated by the air source equipped with CCN controls, the primary air damper will go to the maximum heating airflow set point if the zone temperature is below the occupied heating set point at 6. This allows the warm primary air to be delivered to the zone. As the zone temperature rises above the occupied heating set point, the primary airflow will be reduced to the minimum heating airflow set point at 4'. The terminal fan will remain off.

D. Unoccupied time period: (cooling)
When the unoccupied period is reached, the user-defined occupied cooling set point is reset upward to a user-defined unoccupied cooling set point. If the primary air source is operating, the primary air damper will throttle in the same manner (as per A) during the unoccupied period, using the unoccupied cooling set point.

E. Unoccupied time period: (heating)
When the unoccupied period is reached, the user-defined occupied heating set point is reset downward to a user-defined unoccupied heating set point. If the primary air source is operating, the primary air damper will operate in the same manner (as per B) during the unoccupied period, using the unoccupied heating set point.

F. Demand controlled ventilation (option):
This mode is initiated when the zone is occupied and the air source is not heating. It occurs when the CCN control receives a cooling signal from the air source equipped with CCN controls, or when a primary air temperature sensor is installed to detect the air source operation is cooling. The control will monitor a CO_2 sensor (optional) and determine if ventilation is adequate. The zone CO_2 level is compared to the ventilation set point. If the CO_2 level is above the set point (insufficient ventilation), the airflow set point is increased appropriately to maintain proper ventilation. Should the zone's temperature fall below the heating set point, the control will suspend ventilation override and reduce the airflow to the minimum cooling airflow set point until the zone recovers.

G. Humidity control (option):
This mode is initiated when the zone is occupied and the primary air source is cooling. It occurs when the CCN control receives a cooling signal from the air source equipped with CCN controls, or when a primary air temperature sensor is installed to detect the air source operation is Cooling. The control will monitor a relative humidity (RH) sensor (optional) and determine if the zone's RH is above the humidity set point. If the RH level is above the RH set point, the airflow control point is increased to displace the humid air in the space with air from the primary air source (which has a lower dew point). To ensure non-simultaneous operation of both heating and cooling, should the increased airflow cause the zone's temperature to fall below the heating set point, the control will first suspend the airflow override and reduce the airflow to the minimum cooling set point. This will cause the fan to induce plenum air heat to warm the zone. If after supplying plenum heat for the user-specified heat delay, the heat was insufficient to raise the zone's temperature, then heating will be enabled and will operate as per B. The airflow override will resume when the zone's temperature recovers and be disabled once the zone's RH level falls below the zone's RH set point.

H. Damper override:
The damper override function is energized through the use of a field-supplied smoke control panel connected to the air source equipped with CCN controls. The smoke control panel and installation must be in accordance with UL864 and local codes. The damper override function overrides the airflow setting used by the logic. It will cause the terminal to provide the configured maximum cooling airflow when the air source is in the Pressurization mode, and to disable the fan (if operating) and fully close the primary air damper when the air source is in the Evacuation mode.

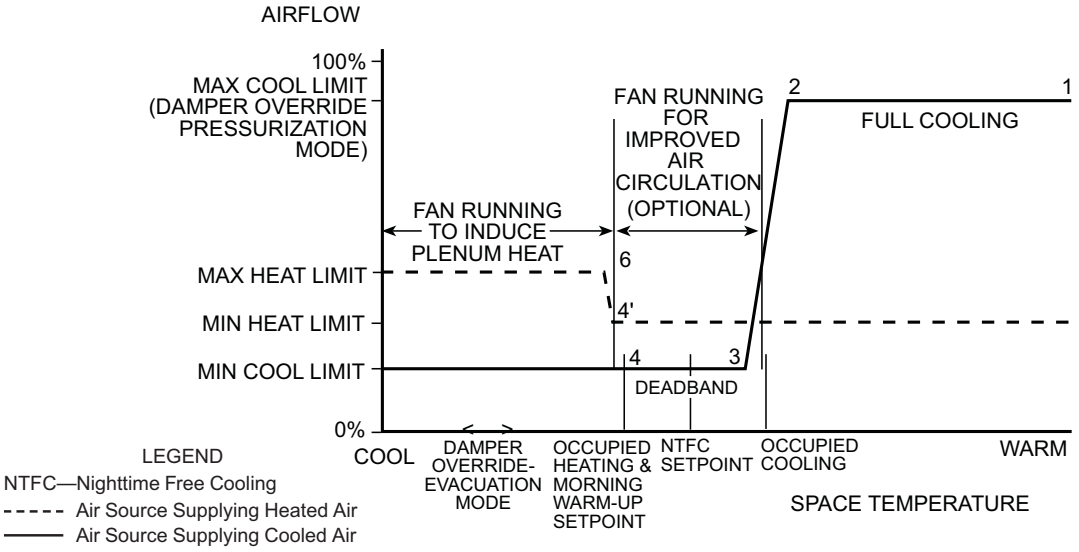

Figure 2 - Sequence of Operation for Intermittent Fan Powered Air Terminal—Without Heat

JOB NAME	JOB NUMBER	LOCATION	PAGE NUMBER	DRAWING NUMBER
BUYER	BUYER #	SHEET	2 OF 4	45M/N/R-C-4740

I. Nighttime free cooling:
The logic calculates a nighttime free cooling (NTFC) temperature set point halfway between the occupied heating and occupied cooling temperature set points. Upon receiving a NTFC signal generated by the air source equipped with CCN controls (or a primary air temperature sensor is installed to detect the air source is operating in the NTFC mode), the primary air damper will modulate between the maximum and minimum cooling airflow set points to maintain the zone's NTFC temperature set point. The terminal fan will remain off.

J. Primary air source shuts off:
1. The damper will fully close and the control will recalibrate the airflow transducer.
2. If the primary air source remains off (no primary air), the damper will be repositioned to 50% open to allow the air source to restart.

JOB NAME	JOB NUMBER	LOCATION	PAGE NUMBER	DRAWING NUMBER
BUYER	BUYER #	SHEET	3 OF 4	45M/N/R-C-4740

CODE	Carrier A United Technologies Company	THIS DOCUMENT IS THE PROPERTY OF CARRIER CORPORATION AND IS DELIVERED UPON THE EXPRESS CONDITION THAT THE CONTENTS WILL NOT BE DISCLOSED OR USED WITHOUT CARRIER CORPORATION'S WRITTEN CONSENT	SUBMISSION OF THESE DRAWINGS OR DOCUMENTS DOES NOT CONSTITUTE PART PERFORMANCE OR ACCEPTANCE OF CONTRACT	ComfortID™ INTERMITTENT FAN	45 MC,NC,RC
CATALOG #					

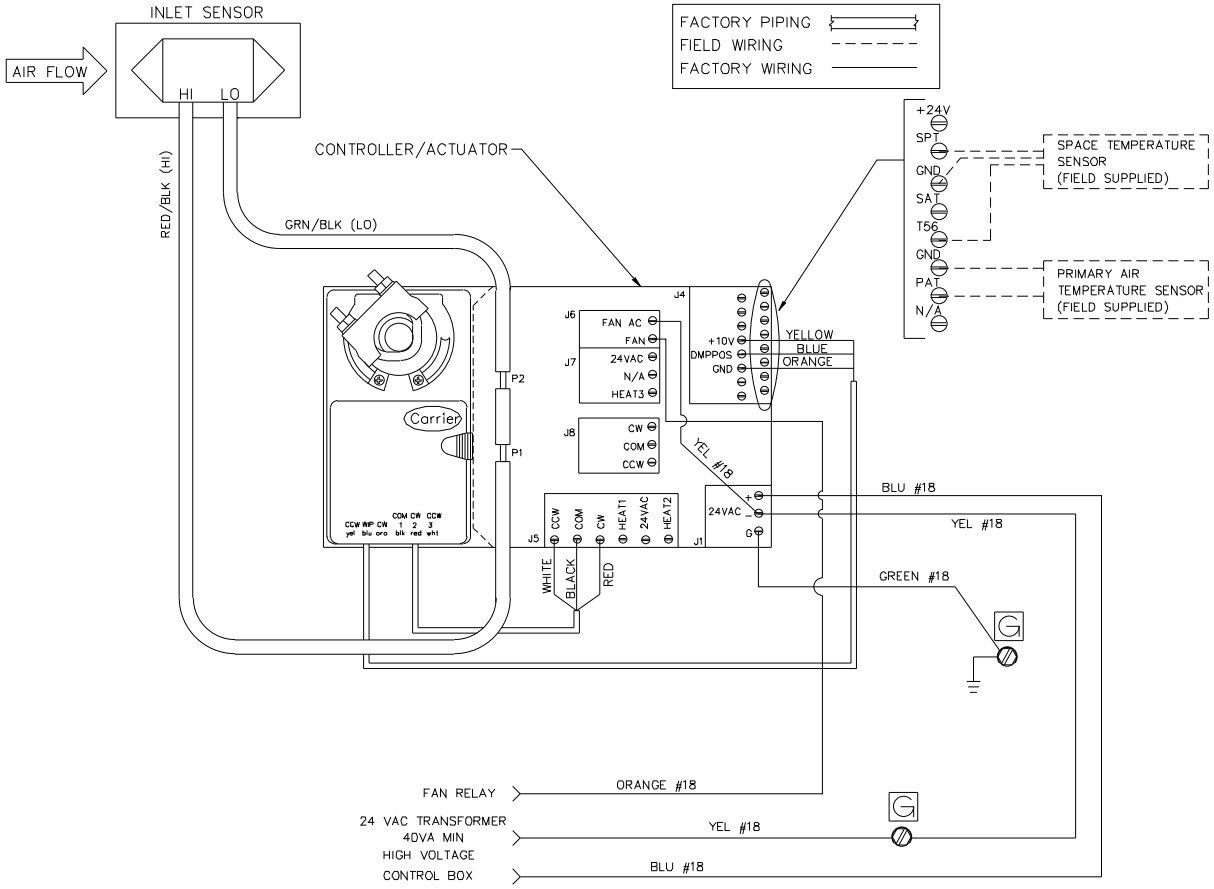

Notes:

1. For 45M/N/R units the Actuator is configured CW to close.

2. CAUTION:
   Electric shock may result. Disconnect unit prior to servicing unit.
3. These controls have been wired to comply with UL-1995.

PRODUCT INFORMATION IS SUBJECT TO CHANGE WITHOUT NOTICE.

JOB NAME	JOB NUMBER	LOCATION	PAGE NUMBER	DRAWING NUMBER
BUYER	BUYER #	SHEET	4 OF 4	45M/N/R-C-4740

CODE CATALOG #	Carrier A United Technologies Company	THIS DOCUMENT IS THE PROPERTY OF CARRIER CORPORATION AND IS DELIVERED UPON THE EXPRESS CONDITION THAT THE CONTENTS WILL NOT BE DISCLOSED OR USED WITHOUT CARRIER CORPORATION'S WRITTEN CONSENT	SUBMISSION OF THESE DRAWINGS OR DOCUMENTS DOES NOT CONSTITUTE PART PERFORMANCE OR ACCEPTANCE OF CONTRACT	ComfortID™ INTERMITTENT FAN	45 MC,NC,RC

ComfortID™ INTERMITTENT FAN POWERED—WITH UP TO 3 STAGES OF ELECTRIC HEAT CARRIER CONTROL PACKAGE NO. 4742

Application:

Intermittent fan powered terminals are designed to provide heating and cooling for perimeter zones. These terminals are also used in interior zones, where a combination of primary air mixed with recirculated air provides increased air movement and improved ventilation. A typical application is shown in Fig. 1. Design, load requirements, downstream (external) static pressure, fan performance and sound level acceptability govern terminal selection and sizing. The controls provide variable air volume (VAV) control of the primary air during cooling. If enabled, a control option can energize the fan during cooling when the zone's cooling load falls below a user-adjustable minimum airflow set point. This feature prevents cold air 'dumping' from the diffusers, while providing improved ventilation at a lower minimum cooling airflow set points. (The fan set point is set to a CFM value slightly above the minimum cooling CFM set point.) When the primary air source is cooling, should the zone require heat, the fan operates to draw in air from the ceiling plenum to provide heat to the zone. During heating, the fan operates to provide ceiling plenum heat, and in addition, electric heat stages operate as required to supplement this heat. These terminals require low inlet static pressure, permitting the use of smaller, more energy efficient primary air fan systems. A wall-mounted space temperature (SPT) sensor located in each zone will sense load requirements and activate the control sequence to accommodate cooling or heating. This control package provides the following sequences of operations:

A. Cooling: (refer to numbers on flow diagram). See Fig. 2.
   1. 1-2 indicates that maximum primary airflow is established by the user-defined maximum cooling airflow set point until the zone comes under control at 2. The fan is disabled.
   2. Beginning at 2, the primary airflow is regulated over a throttling range by the damper until the minimum cooling airflow set point is reached at 3. (It must be noted that the minimum cooling airflow set point could be set to zero by the user. In this case, the damper will fully close if the zone temperature continues to fall.) Optionally, as the primary airflow is reduced, the fan will operate to increase air circulation and improve ventilation when the primary airflow falls below the user-defined airflow set point.
   3. 3-4 indicates that, should the zone temperature continue to fall, the damper will hold the user-defined minimum cooling airflow set point.

B. Auxiliary electric heating: (when the primary air source is cooling, refer to numbers on flow diagram). See Fig. 2. The installer is responsible for proper temperature, no more than 120 F maximum discharge from the heating

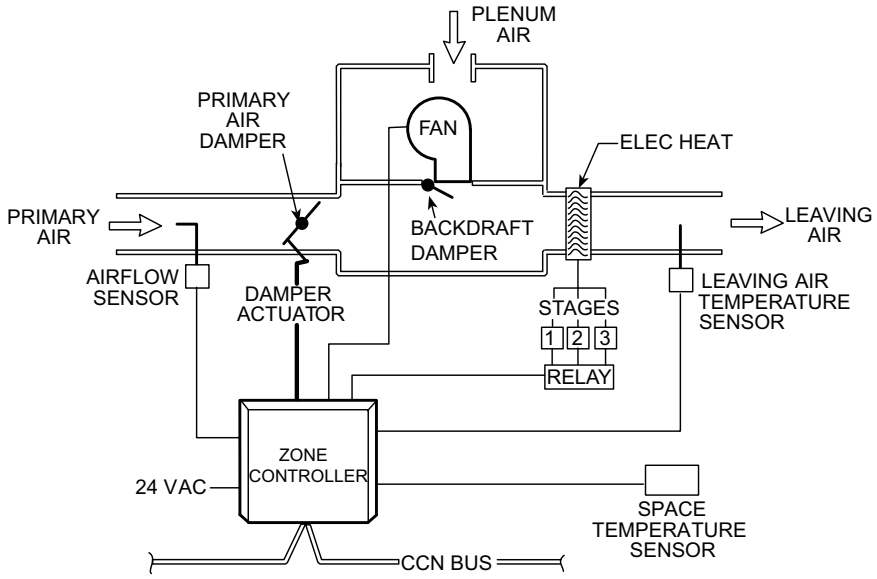

Figure 1 - Intermittent Fan Powered Air Terminal With Staged Electric Heat

PRODUCT INFORMATION IS SUBJECT TO CHANGE WITHOUT NOTICE. 01/30/2003

JOB NAME	JOB NUMBER	LOCATION	PAGE NUMBER	DRAWING NUMBER
BUYER	BUYER #	SHEET	1 OF 4	45M/N/R-C-4742

apparatus for safe and proper operation. Follow the manufacturer's recommendations for specific equipment.

1. Should the zone temperature fall below the occupied heating set point, the Occupied Heating mode is in effect at 4.
2. The fan is energized to induce heated plenum air to warm the zone.
3. After supplying plenum heat for the user-specified heat delay, the heat was insufficient to raise the zone's temperature, then at 5, up to 3 stages of electric heat (1h, 2h and 3h) are energized successively until all stages are activated as needed. The stages are controlled so as not to exceed the maximum discharge temperature limit. During the Heating mode, the primary airflow is maintain at the user-defined minimum cooling airflow set point.
4. When the zone temperature rises above the occupied heating set point, the heater stages are disabled. After an adjustable delay has expired, the fan is disabled unless required operation is ventilation and the Ventilation mode is reactivated at 4.

C. Heating: (when the primary air source is providing heated air, refer to numbers on flow diagram). See Fig. 2.
The installer is responsible for proper selection of the temperature no more than 120 F maximum discharge from the heating apparatus for safe and proper operation.

1. Upon receiving a heating signal generated by the air source equipped with CCN controls (or a primary air temperature sensor is installed to detect that the air source is heating), should the zone temperature fall below the occupied heating set point, the Heating mode is in effect at 4'.
2. The damper will maintain the minimum heating airflow set point at 4'. The fan will be energized and the electric heater stages will operate as required to supplement the induced air heat from the ceiling plenum.
3. The control may be configured to provide variable volume heating. In that case the damper is throttled between the user-defined minimum heating airflow set point at 4' and the user-defined maximum heating airflow set point at 6. The fan will operate during this cycle. If VAV heating is enabled, it is important to limit the maximum heating set point so that the combined airflow of both the fan and the maximum heating set point do not exceed the maximum for the zone's diffusers.

D. Morning warm-up: (configured to provide constant volume heating)
Upon receiving a morning warm-up signal generated by the air source equipped with CCN controls, the primary air damper will maintain the minimum heating airflow set point. The terminal fan will operate to provide plenum air to the space and the electric heater stages will operate to supplement the plenum heat as required. The stages are controlled so as not to exceed the maximum discharge temperature. The control may be configured to provide variable volume heating. In that case the damper is throttled between the user-defined minimum heating airflow set point at 4' and the user-defined maximum heating airflow set point at 6. The fan will operate during this cycle. If VAV heating is enabled, it is important to limit the maximum heating set point so that the combined airflow of both the fan and the maximum heating set point do not exceed the maximum for the zone's diffusers.

E. Unoccupied time period: (cooling)
When the unoccupied period is reached, the user-defined occupied cooling set point is reset upward to a user-defined unoccupied cooling set point. If the primary air source is operating, the primary air damper will throttle in the same manner (as per A) during the unoccupied period, using the unoccupied cooling set point.

F. Unoccupied time period: (auxiliary electric heating when air source is off)
When the unoccupied period is reached, the user-defined occupied heating set point is reset downward to

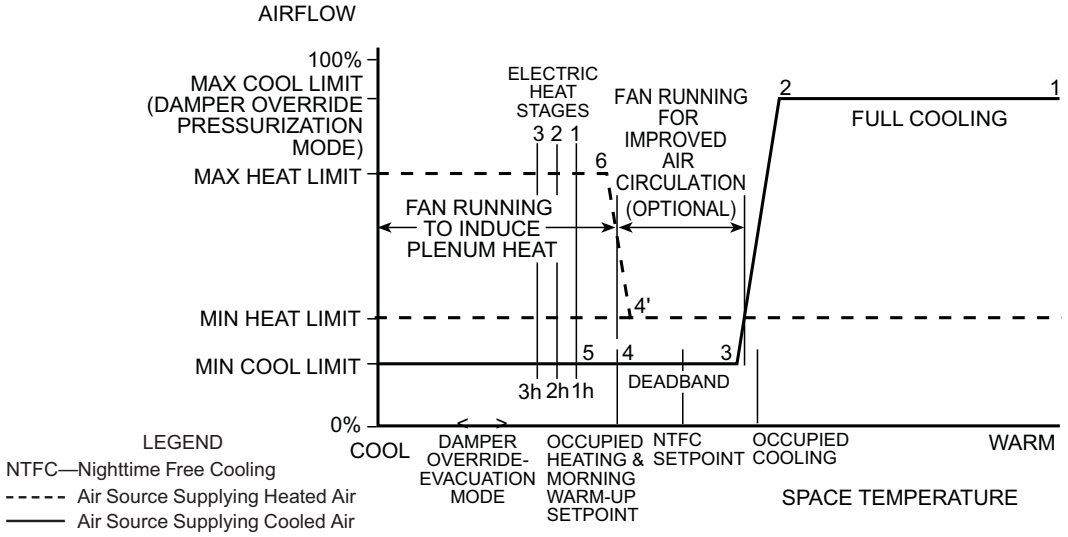

Figure 2 - Sequence of Operation for Intermittent Fan Powered Air Terminal With Staged Electric Heat

JOB NAME	JOB NUMBER	LOCATION	PAGE NUMBER	DRAWING NUMBER
BUYER	BUYER #	SHEET	2 OF 4	45M/N/R-C-4742

a user-defined unoccupied heating set point. If the zone's temperature falls below the unoccupied heating set point, the unoccupied Heating mode is in effect. The terminal fan will start and the primary air damper will fully close. The electric heat stages will operate to supplement the plenum air heat as required (the proper fan speed must be selected to provide at least 500 fpm through the heater). When the zone's temperature rises above the unoccupied heating set point, the electric heat stages are disabled and the fan will stop after the user-defined fan delay has expired. The primary air damper will then be returned to a 50% open position to allow the primary air source to properly start.

G. Unoccupied time period: (heating)
When the unoccupied period is reached, the user-defined occupied heating set point is reset downward to a user-defined unoccupied heating set point. The primary air damper will operate in the same manner (as per C) during the unoccupied period, using the unoccupied heating set point.

H. Demand controlled ventilation (option):
This mode is initiated when the zone is occupied and the air source is not heating. It occurs when the CCN control receives a cooling signal from the air source equipped with CCN controls, or when a primary air temperature sensor is installed to detect the air source operation is cooling. The control will monitor a CO_2 sensor (optional) and determine if ventilation is adequate. The zone CO_2 level is compared to the ventilation set point. If the CO_2 level is above the set point (insufficient ventilation), the airflow set point is increased appropriately to maintain proper ventilation. Should the zone's temperature fall below the heating set point, the control will suspend ventilation override until the zone's temperature recovers. If after supplying plenum heat for the user-specified heat delay, the heat was insufficient to raise the zone's temperature, then heating will be enabled and will operate as per B.

I. Humidity control (option):
This mode is initiated when the zone is occupied and the primary air source is cooling. It occurs when the CCN control receives a cooling signal from the air source equipped with CCN controls, or when a primary air temperature sensor is installed to detect the air source operation is Cooling. The control will monitor a relative humidity (RH) sensor (optional) and determine if the zone's RH is above the humidity set point. If the RH level is above the RH set point, the airflow control point is increased to displace the humid air in the space with air from the primary air source (which has a lower dew point). To ensure non-simultaneous operation of both heating and cooling, should the increased airflow cause the zone's temperature to fall below the heating set point, the control will first suspend the airflow override and reduce the airflow to the minimum cooling set point. The fan will operate to induce plenum air heat to warm the zone. If after supplying plenum heat for the user-specified heat delay, the heat was insufficient to raise the zone's temperature, then heating will be enabled and will operate as per B. The airflow override will resume when the zone's temperature recovers and be disabled once the zone's RH level falls below the zone's RH set point.

J. Damper override:
The damper override function is energized through the use of a field-supplied smoke control panel connected to the air source equipped with CCN controls. The smoke control panel and installation must be in accordance with UL864 and local codes. The damper override function overrides the airflow setting used by the logic. It will cause the terminal to provide the configured maximum cooling airflow when the air source is in the Pressurization mode, and to disable the fan (if operating) and fully close the primary air damper when the air source is in the Evacuation mode.

K. Nighttime free cooling:
The logic calculates a nighttime free cooling (NTFC) temperature set point halfway between the occupied heating and occupied cooling temperature set points. Upon receiving a NTFC signal generated by the air source equipped with CCN controls (or a primary air temperature sensor is installed to detect the air source is operating in the NTFC mode), the primary air damper will modulate between the maximum and minimum cooling airflow set points to maintain the zone's NTFC temperature set point. The terminal fan will remain off.

L. Primary air source shuts off:
1. The fan will be disabled unless the zone temperature falls below the heating set point (refer to C).
2. The damper will fully close and the control will recalibrate the airflow transducer.
3. If the primary air source remains off (no primary air), the damper will be repositioned to 50% open to allow the air source to restart.

JOB NAME	JOB NUMBER	LOCATION	PAGE NUMBER	DRAWING NUMBER
BUYER	BUYER #	SHEET	3 OF 4	45M/N/R-C-4742

CODE	Carrier A United Technologies Company	THIS DOCUMENT IS THE PROPERTY OF CARRIER CORPORATION AND IS DELIVERED UPON THE EXPRESS CONDITION THAT THE CONTENTS WILL NOT BE DISCLOSED OR USED WITHOUT CARRIER CORPORATION'S WRITTEN CONSENT	SUBMISSION OF THESE DRAWINGS OR DOCUMENTS DOES NOT CONSTITUTE PART PERFORMANCE OR ACCEPTANCE OF CONTRACT	ComfortID™ INTERMITTENT FAN	45 MC,NC,RC
CATALOG #					

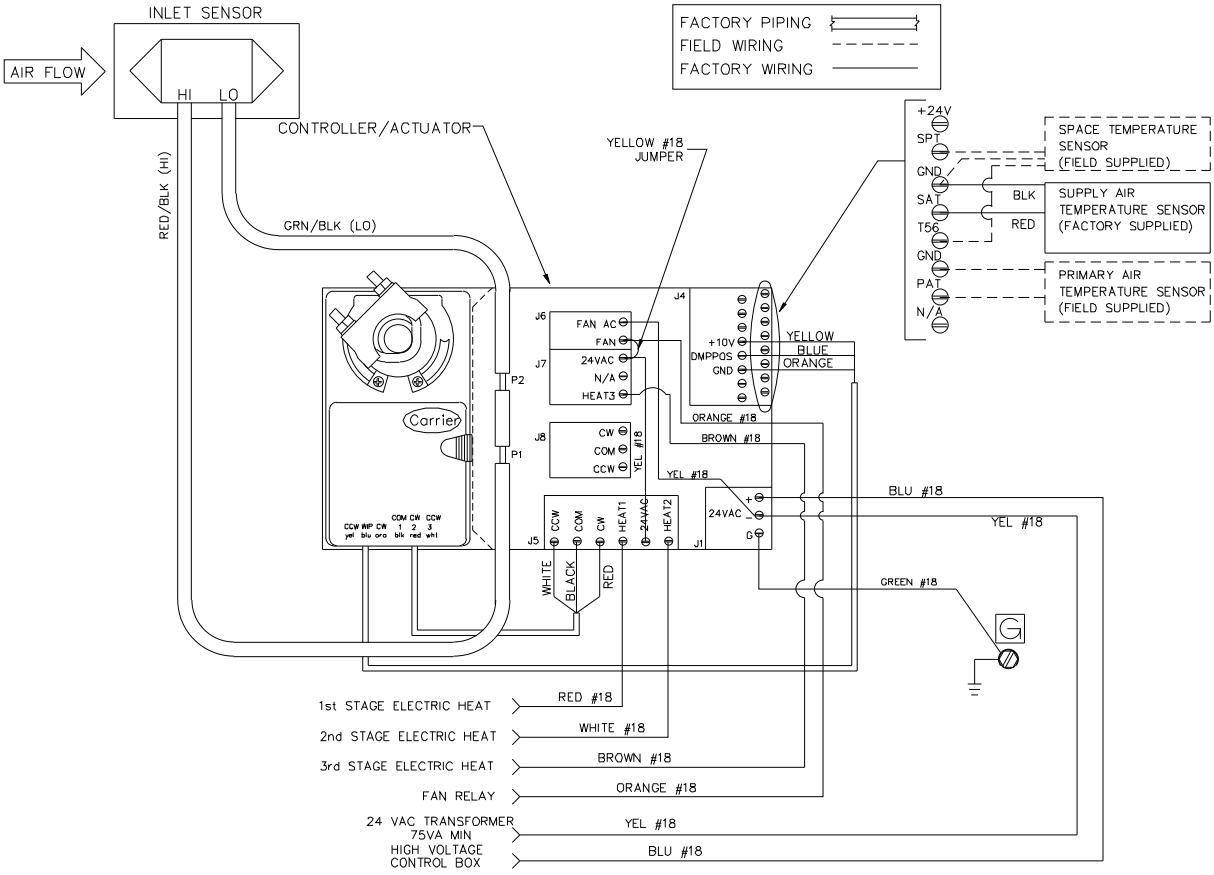

Notes:

1. For 45M/N/R units the Actuator is configured CW to close.

2. CAUTION:
   Electric shock may result. Disconnect unit prior to servicing unit.
3. These controls have been wired to comply with UL-1995.

PRODUCT INFORMATION IS SUBJECT TO CHANGE WITHOUT NOTICE.

JOB NAME	JOB NUMBER	LOCATION	PAGE NUMBER	DRAWING NUMBER
BUYER	BUYER #	SHEET	4 OF 4	45M/N/R-C-4742

CODE CATALOG #	Carrier A United Technologies Company	THIS DOCUMENT IS THE PROPERTY OF CARRIER CORPORATION AND IS DELIVERED UPON THE EXPRESS CONDITION THAT THE CONTENTS WILL NOT BE DISCLOSED OR USED WITHOUT CARRIER CORPORATION'S WRITTEN CONSENT	SUBMISSION OF THESE DRAWINGS OR DOCUMENTS DOES NOT CONSTITUTE PART PERFORMANCE OR ACCEPTANCE OF CONTRACT	ComfortID™ INTERMITTENT FAN	45 MC,NC,RC

ComfortID™ INTERMITTENT FAN POWERED—WITH ON/OFF HOT WATER HEAT CARRIER CONTROL PACKAGE NO. 4743

Application:

Intermittent fan powered terminals are designed to provide heating and cooling for perimeter zones. These terminals are also used in interior zones, where a combination of primary air mixed with recirculated air provides increased air movement and improved ventilation. A typical application is shown in Fig. 1. Design, load requirements, downstream (external) static pressure, fan performance and sound level acceptability govern terminal selection and sizing. The terminal fan performance is selected to provide sufficient pressure to overcome the coil pressure drop and external static pressure. (It is important that the correct fan and fan speed be selected to ensure that sufficient Btu's can be delivered to meet the heating and cooling load requirements.) The controls provide variable air volume (VAV) control of the primary air for cooling and operates a two-position heating valve connected to a heating coil to supplement fan induced plenum heat during heating. If enabled, a control option can energize the fan during cooling when the zone's cooling load falls below a user-adjustable minimum airflow set point. This feature prevents cold air 'dumping' from the diffusers, while providing improved ventilation at a lower minimum cooling airflow set points. (The fan set point is set to a CFM value slightly above the minimum cooling CFM set point.) When the primary air source is cooling, should the zone require heat, the fan operates to draw in air from the ceiling plenum to provide heat to the zone. The fan operates to provide ceiling plenum heat, and in addition, hot water heat operates as required to supplement this heat. A wall-mounted space temperature (SPT) sensor located in each zone will sense load requirements and activate the control sequence to accommodate cooling or heating. This control package provides the following sequences of operations:

A. Cooling: (refer to numbers on flow diagram). See Fig. 2.
   1. 1-2 indicates that maximum primary airflow is established by the user-defined maximum cooling airflow set point until the zone comes under control at 2. The fan is disabled.
   2. Beginning at 2, the primary airflow is regulated over a throttling range by the damper until the minimum cooling airflow set point is reached at 3. (It must be noted that the minimum cooling airflow set point could be set to zero by the user. In this case, the damper will fully close if the zone temperature continues to fall.) Optionally, as the primary airflow is reduced, the fan operates to increase air circulation and improve ventilation when the primary airflow falls below the user-defined airflow set point.
   3. 3-4 indicates that, should the zone temperature continue to fall, the damper will hold the user-defined minimum cooling airflow set point.

B. Auxiliary hot water heating: (when the primary air source is cooling, refer to numbers on flow diagram). See Fig. 2.
   1. Should the zone temperature fall below the occupied heating set point, the Occupied Heating mode is in effect at 4.
   2. The fan is energized to induce heated plenum air to warm the zone.

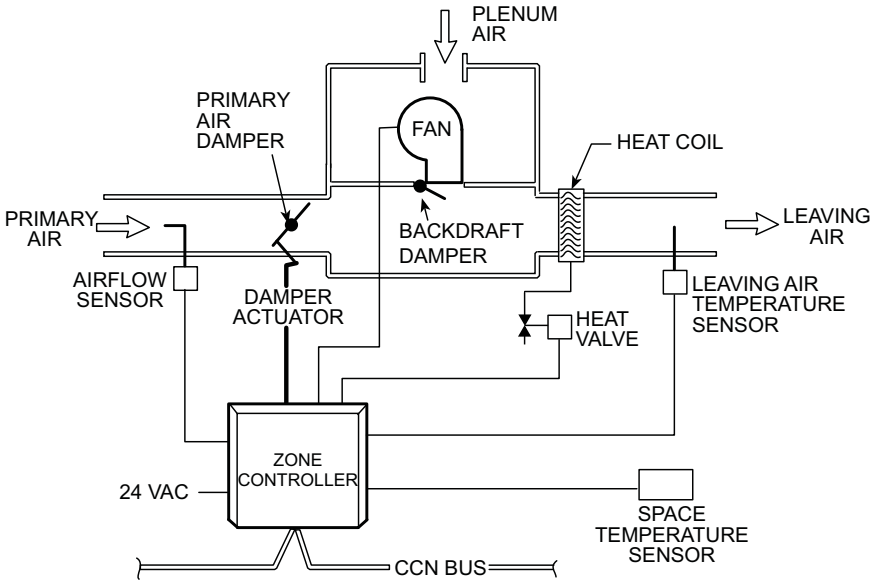

Figure 1 - Intermittent Fan Powered Air Terminal With Two-Position Hot Water Heat

PRODUCT INFORMATION IS SUBJECT TO CHANGE WITHOUT NOTICE. 01/30/2003

JOB NAME	JOB NUMBER	LOCATION	PAGE NUMBER	DRAWING NUMBER
BUYER	BUYER #	SHEET	1 OF 4	45M/N/R-C-4743

3. After supplying plenum heat for the user-specified heat delay, the heat was insufficient to raise the zone's temperature, then at 5, the hot water valve will open. The valve is controlled so as not to exceed the maximum discharge temperature. During the Heating mode, the primary airflow is maintain at the user-defined minimum cooling airflow set point.
4. When the zone temperature rises above the occupied heating set point, the valve closes. After an adjustable delay has expired, the fan is disabled unless required to provide ventilation and the Ventilation mode is reactivated at 4.

C. Heating: (when the primary air source is providing heated air, refer to numbers on flow diagram). See Fig. 2.

1. Upon receiving a heating signal generated by the air source equipped with CCN controls (or a primary air temperature sensor is installed to detect that the air source is heating), should the zone temperature fall below the occupied heating set point, the Heating mode is in effect at 4'.
2. The damper will maintain the minimum heating airflow set point at 4'. The fan will be energized and the water valve will open if required to supplement the induced air heat from the ceiling plenum.
3. The control may be configured to provide variable volume heating. In that case the damper is throttled between the user-defined minimum heating airflow set point at 4' and the user-defined maximum heating airflow set point at 6. The fan will operate during this cycle. If VAV heating is enabled, it is important to limit the maximum heating set point so that the combined airflow of both the fan and the maximum heating set point do not exceed the maximum for the zone's diffusers.

D. Morning warm-up: (configured to provide constant volume heating)
Upon receiving a morning warm-up signal generated by the air source equipped with CCN controls, the primary air damper will maintain the minimum heating airflow set point. The terminal fan will operate to provide plenum air to the space and the water valve will operate to supplement the plenum heat as required. The valve is controlled so as not to exceed the maximum discharge temperature. The control may be configured to provide variable volume heating. In that case the damper is throttled between the user-defined minimum heating air flow set point at 4' and the user-defined maximum heating airflow set point at 6. The fan will operate during this cycle. If VAV heating is enabled, it is important to limit the maximum heating set point so that the combined airflow of both the fan and the maximum heating set point do not exceed the maximum for the zone's diffusers.

E. Unoccupied time period: (cooling)
When the unoccupied period is reached, the user-defined occupied cooling set point is reset upward to a user-defined unoccupied cooling set point. If the primary air source is operating, the primary air damper will throttle in the same manner (as per A) during the unoccupied period, using the unoccupied cooling set point.

F. Unoccupied time period: (auxiliary hydronic heating when air source is off)
When the unoccupied period is reached, the user-defined occupied heating set point is reset downward to a user-defined unoccupied heating set point. If the zone's temperature falls below the unoccupied heating set point, the Unoccupied Heating mode is in effect. The terminal fan will start and the primary air damper will fully close. The water valve will open to supplement the plenum air heat as required. When the zone's temperature rises above the

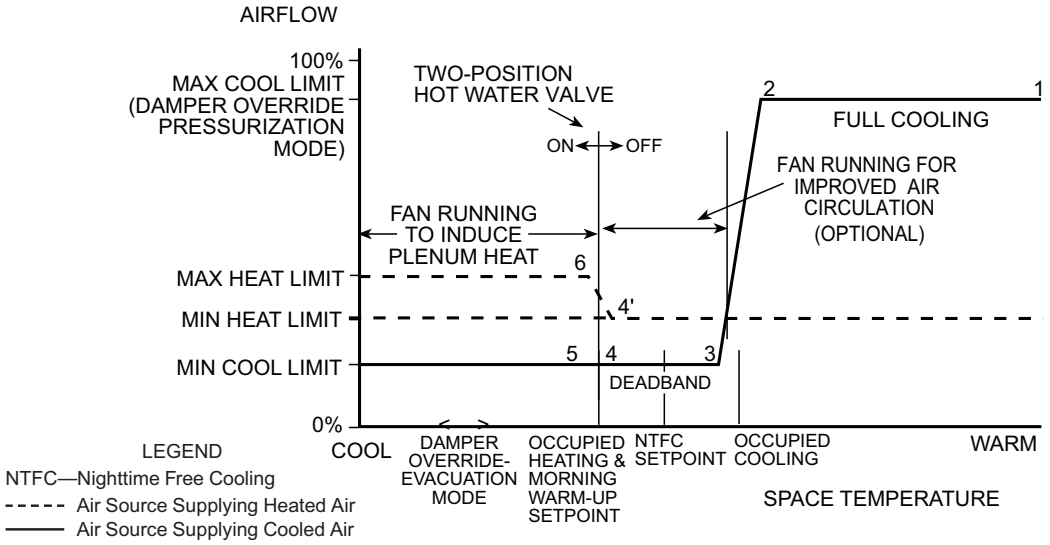

Figure 2 - Sequence of Operation for Intermittent Fan Powered Air Terminal With Two-Position Hot Water Heat

JOB NAME	JOB NUMBER	LOCATION	PAGE NUMBER	DRAWING NUMBER
BUYER	BUYER #	SHEET	2 OF 4	45M/N/R-C-4743

unoccupied heating set point, the water valve will close and the fan will stop after the user-defined fan delay has expired. The primary air damper will then be returned to a 50% open position to allow the primary air source to properly start.

G. Unoccupied time period: (heating)
When the unoccupied period is reached, the user-defined occupied heating set point is reset downward to a user-defined unoccupied heating set point. The primary air damper will operate in the same manner (as per C) during the unoccupied period, using the unoccupied heating set point.

H. Demand controlled ventilation (option):
This mode is initiated when the zone is occupied and the air source is not heating. It occurs when the CCN control receives a cooling signal from the air source equipped with CCN controls, or when a primary air temperature sensor is installed to detect the air source operation is cooling. The control will monitor a CO_2 sensor (optional) and determine if ventilation is adequate. The zone CO_2 level is compared to the ventilation set point. If the CO_2 level is above the set point (insufficient ventilation), the airflow set point is increased appropriately to maintain proper ventilation. Should the zone's temperature fall below the heating set point, the control will suspend ventilation override until the zone's temperature recovers. If after supplying plenum heat for the user-specified heat delay, the heat was insufficient to raise the zone's temperature, then heating will be enabled and will operate as per B.

I. Humidity control (option):
This mode is initiated when the zone is occupied and the primary air source is cooling. It occurs when the CCN control receives a cooling signal from the air source equipped with CCN controls, or when a primary air temperature sensor is installed to detect the air source operation is cooling. The control will monitor a relative humidity (RH) sensor (optional) and determine if the zone's RH is above the humidity set point. If the RH level is above the RH set point, the airflow control point is increased to displace the humid air in the space with air from the primary air source (which has a lower dew point). To ensure non-simultaneous operation of both heating and cooling, should the increased airflow cause the zone's temperature to fall below the heating set point, the control will first suspend the airflow override and reduce the airflow to the minimum cooling set point. The fan will operate to induce plenum air heat to warm the zone. If after supplying plenum heat for the user-specified heat delay, the heat was insufficient to raise the zone's temperature, then heating will be enabled and will operate as per B. The airflow override will resume when the zone's temperature recovers and be disabled once the zone's RH level falls below the zone's RH set point.

J. Damper override:
The damper override function is energized through the use of a field-supplied smoke control panel connected to the air source equipped with CCN controls. The smoke control panel and installation must be in accordance with UL864 and local codes. The damper override function overrides the airflow setting used by the logic. It will cause the terminal to provide the configured maximum cooling airflow when the air source is in the Pressurization mode, and to disable the fan (if operating) and fully close the primary air damper when the air source is in the Evacuation mode.

K. Nighttime free cooling:
The logic calculates a nighttime free cooling (NTFC) temperature set point halfway between the occupied heating and occupied cooling temperature set points. Upon receiving a NTFC signal generated by the air source equipped with CCN controls (or a primary air temperature sensor is installed to detect the air source is operating in the NTFC mode), the primary air damper will modulate between the maximum and minimum cooling airflow set points to maintain the zone's NTFC temperature set point. The terminal fan will remain off.

L. Primary air source shuts off:
1. The fan will be disabled unless the zone temperature falls below the heating set point (refer to C).
2. The damper will fully close and the control will recalibrate the airflow transducer.
3. If the primary air source remains off (no primary air), the damper will be repositioned to 50% open to allow the air source to restart.

JOB NAME	JOB NUMBER	LOCATION	PAGE NUMBER	DRAWING NUMBER
BUYER	BUYER #	SHEET	3 OF 4	45M/N/R-C-4743

CODE	Carrier A United Technologies Company	THIS DOCUMENT IS THE PROPERTY OF CARRIER CORPORATION AND IS DELIVERED UPON THE EXPRESS CONDITION THAT THE CONTENTS WILL NOT BE DISCLOSED OR USED WITHOUT CARRIER CORPORATION'S WRITTEN CONSENT	SUBMISSION OF THESE DRAWINGS OR DOCUMENTS DOES NOT CONSTITUTE PART PERFORMANCE OR ACCEPTANCE OF CONTRACT	ComfortID™ INTERMITTENT FAN	45 MC,NC,RC
CATALOG #					

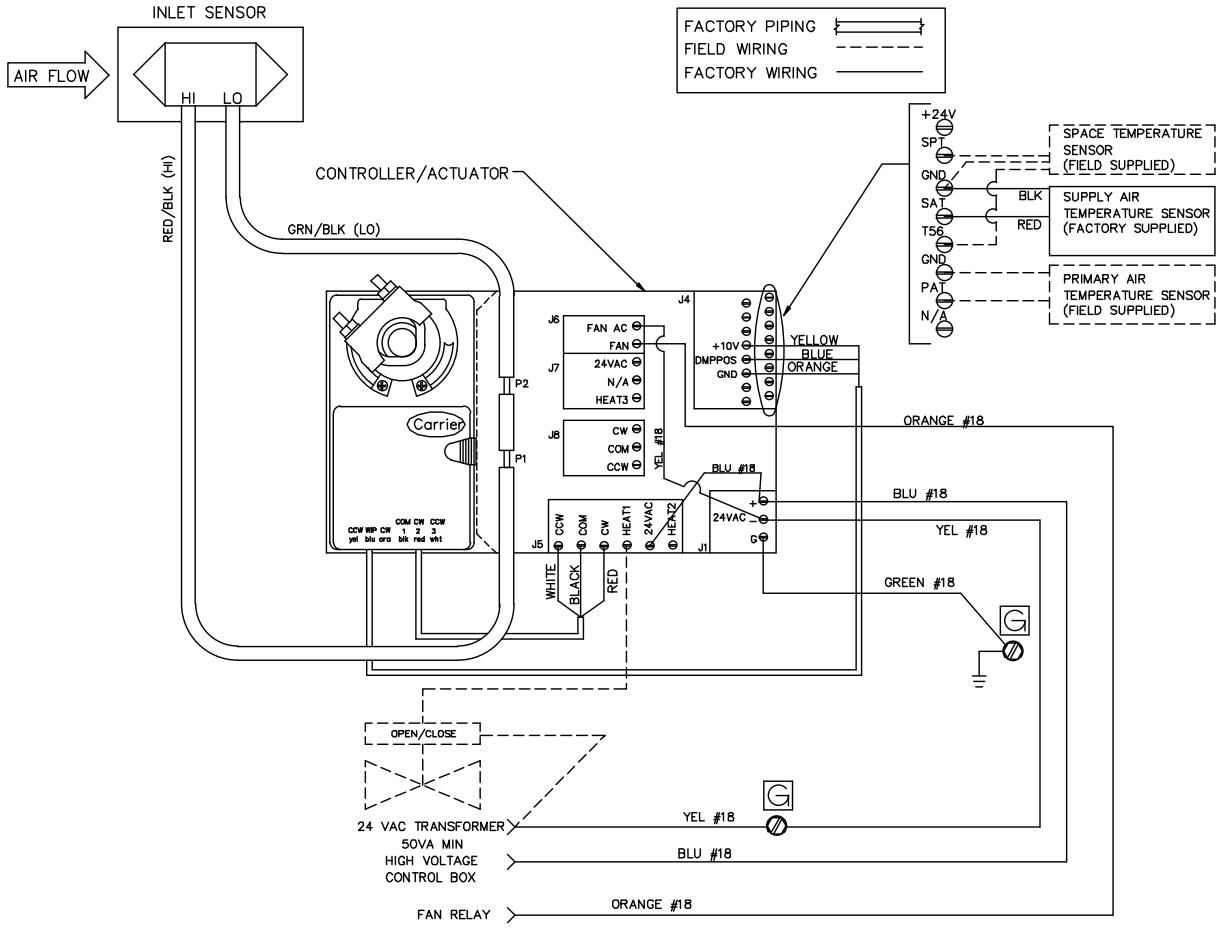

Notes:

1. For 45M/N/R units the Actuator is configured CW to close.

2. CAUTION:
   Electric shock may result. Disconnect unit prior to servicing unit.
3. These controls have been wired to comply with UL-1995.

PRODUCT INFORMATION IS SUBJECT TO CHANGE WITHOUT NOTICE.

JOB NAME	JOB NUMBER	LOCATION	PAGE NUMBER	DRAWING NUMBER
BUYER	BUYER #	SHEET	4 OF 4	45M/N/R-C-4743

CODE CATALOG #	Carrier A United Technologies Company	THIS DOCUMENT IS THE PROPERTY OF CARRIER CORPORATION AND IS DELIVERED UPON THE EXPRESS CONDITION THAT THE CONTENTS WILL NOT BE DISCLOSED OR USED WITHOUT CARRIER CORPORATION'S WRITTEN CONSENT	SUBMISSION OF THESE DRAWINGS OR DOCUMENTS DOES NOT CONSTITUTE PART PERFORMANCE OR ACCEPTANCE OF CONTRACT	ComfortID™ INTERMITTENT FAN	45 MC,NC,RC

ComfortID™ INTERMITTENT FAN POWERED — PROPORTIONAL (FLOATING) HOT WATER HEAT CARRIER CONTROL PACKAGE NO. 4744

Application:

Intermittent fan powered terminals are designed to provide heating and cooling for perimeter zones. These terminals are also used in interior zones, where a combination of primary air mixed with recirculated air provides increased air movement and improved ventilation. A typical application is shown in Fig. 1. Design, load requirements, downstream (external) static pressure, fan performance and sound level acceptability govern terminal selection and sizing. The terminal fan performance is selected to provide sufficient pressure to overcome the coil pressure drop and external static pressure. (It is important that the correct fan and fan speed be selected to ensure that sufficient Btu's can be delivered to meet the heating and cooling load requirements.) The controls provide variable air volume (VAV) control of the primary air for cooling and operates a modulating hot water valve connected to a heating coil to supplement fan induced plenum heat during heating. If enabled, a control option can energize the fan during cooling when the zone's cooling load falls below a user-adjustable minimum airflow set point. This feature prevents cold air 'dumping' from the diffusers, while providing improved ventilation at a lower minimum cooling airflow set points. (The fan set point is set to a CFM value slightly above the minimum cooling CFM set point.) When the primary air source is cooling, should the zone require heat, the fan operates to draw in air from the ceiling plenum to provide heat to the zone. The fan operates to provide ceiling plenum heat, and in addition, the hot water valve operates as required to supplement this heat. A wall-mounted space temperature (SPT) sensor located in each zone will sense load requirements and activate the control sequence to accommodate cooling or heating. This control package provides the following sequences of operations:

A. Cooling: (refer to numbers on flow diagram). See Fig. 2.
   1. 1-2 indicates that maximum primary airflow is established by the user-defined maximum cooling airflow set point until the zone comes under control at 2. The fan is disabled.
   2. Beginning at 2, the primary airflow is regulated over a throttling range by the damper until the minimum cooling airflow set point is reached at 3. (It must be noted that the minimum cooling airflow set point could be set to zero by the user. In this case, the damper will fully close if the zone temperature continues to fall.) Optionally, as the primary airflow is reduced, the fan operates to increase air circulation and improve ventilation when the primary airflow falls below the user-defined airflow set point.
   3. 3-4 indicates that, should the zone temperature continue to fall, the damper will hold the user-defined minimum cooling airflow set point.

B. Auxiliary hot water heating: (when the primary air source is cooling, refer to numbers on flow diagram). See Fig. 2.
   1. Should the zone temperature fall below the occupied heating set point, the Occupied Heating mode is in effect at 4.

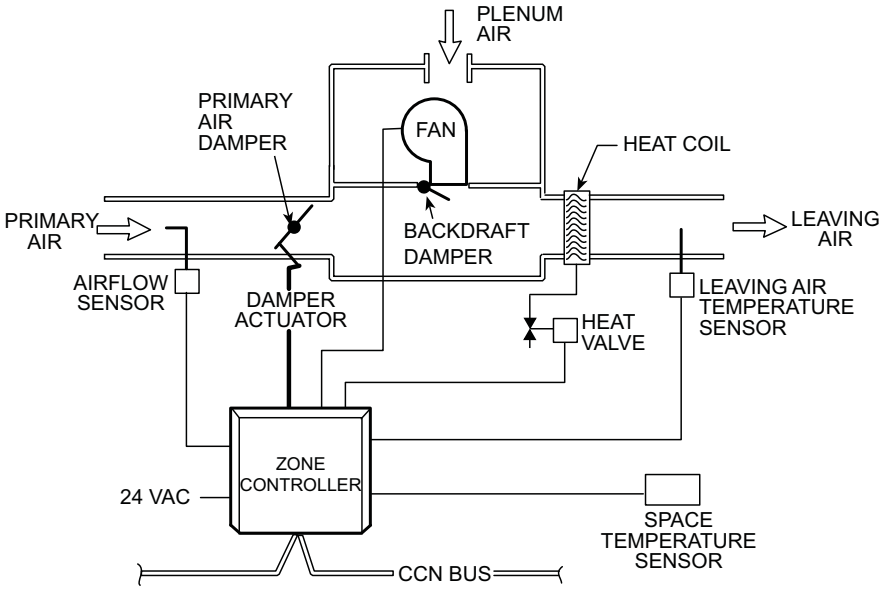

Figure 1 - Intermittent Fan Powered Air Terminal With Proportional Hot Water Heat

PRODUCT INFORMATION IS SUBJECT TO CHANGE WITHOUT NOTICE. 01/30/2003

JOB NAME	JOB NUMBER	LOCATION	PAGE NUMBER	DRAWING NUMBER
BUYER	BUYER #	SHEET	1 OF 4	45M/N/R-C-4744

2. The fan is energized to induce heated plenum air to warm the zone.
3. After supplying plenum heat for the user-specified heat delay, the heat was insufficient to raise the zone's temperature, then at 5, the hot water valve will modulate open to provide the necessary heat to the zone. The valve is controlled so as not to exceed the maximum discharge temperature. During the Heating mode, the primary airflow is maintain at the user-defined minimum cooling airflow set point.
4. When the zone temperature rises above the occupied heating set point, the valve modulates closed. After the valve has closed and an adjustable delay has expired, the fan is disabled and the Ventilation mode is reactivated at 4.

C. Heating: (when the primary air source is providing heated air, refer to numbers on flow diagram). See Fig. 2.
1. Upon receiving a heating signal generated by the air source equipped with CCN controls (or a primary air temperature sensor is installed to detect that the air source is heating), should the zone temperature fall below the occupied heating set point, the Heating mode is in effect at 4'.
2. The damper will maintain the minimum heating airflow set point at 4'. The fan will be energized and the water valve will modulate open as required to supplement the induced air heat from the ceiling plenum.
3. The control may be configured to provide variable volume heating. In that case the damper is throttled between the user-defined minimum heating airflow set point at 4' and the user-defined maximum heating airflow set point at 6. The fan will operate during this cycle. If VAV heating is enabled, it is important to limit the maximum heating set point so that the combined airflow of both the fan and the maximum heating set point do not exceed the maximum for the zone's diffusers.

D. Morning warm-up: (configured to provide constant volume heating)
Upon receiving a morning warm-up signal generated by the air source equipped with CCN controls, the primary air damper will maintain the minimum heating airflow set point. The terminal fan will operate to provide plenum air to the space and the water valve will modulate as required to supplement the plenum heat. The valve is controlled so as not to exceed the maximum discharge temperature. The control may be configured to provide variable volume heating. In that case the damper is throttled between the user-defined minimum heating air flow set point at 4' and the user-defined maximum heating airflow set point at 6. The fan will operate during this cycle. If VAV heating is enabled, it is important to limit the maximum heating set point so that the combined airflow of both the fan and the maximum heating set point do not exceed the maximum for the zone's diffusers.

E. Unoccupied time period: (cooling)
When the unoccupied period is reached, the user-defined occupied cooling set point is reset upward to a user-defined unoccupied cooling set point. If the primary air source is operating, the primary air damper will throttle in the same manner (as per A) during the unoccupied period, using the unoccupied cooling set point.

F. Unoccupied time period: (auxiliary hydronic heating when the air source is off)
When the unoccupied period is reached, the user-defined occupied heating set point is reset downward to a user-defined unoccupied heating set point. If the zone's temperature falls below the unoccupied heating set point, the Unoccupied Heating mode is in effect. The terminal fan will start and the primary air damper will fully close. The water valve will modulate open to supplement the plenum air heat as required. When the zone's temperature rises above the unoccupied heating set point, the water valve will modulate closed. After the valve has fully closed and the user-defined fan delay has expired, the fan will be disabled. The primary air damper will then be returned to

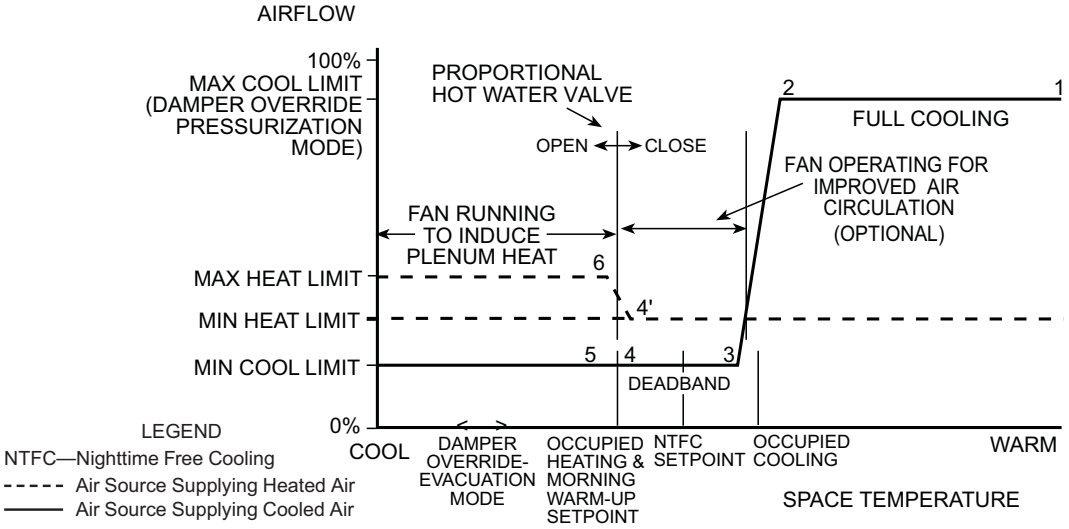

Figure 2 - Sequence of Operation for Intermittent Fan Powered Air Terminal With Proportional Hot Water Heat

JOB NAME	JOB NUMBER	LOCATION	PAGE NUMBER	DRAWING NUMBER
BUYER	BUYER #	SHEET	2 OF 4	45M/N/R-C-4744

a 50% open position to allow the primary air source to properly start.

G. Unoccupied time period: (heating)
When the unoccupied period is reached, the user-defined occupied heating set point is reset downward to a user-defined unoccupied heating set point. The primary air damper will operate in the same manner (as per C) during the unoccupied period, using the unoccupied heating set point.

H. Demand controlled ventilation (option):
This mode is initiated when the zone is occupied and the air source is not heating. It occurs when the CCN control receives a cooling signal from the air source equipped with CCN controls, or when a primary air temperature sensor is installed to detect the air source operation is cooling. The control will monitor a CO_2 sensor (optional) and determine if ventilation is adequate. The zone CO_2 level is compared to the ventilation set point. If the CO_2 level is above the set point (insufficient ventilation), the airflow set point is increased appropriately to maintain proper ventilation. Should the zone's temperature fall below the heating set point, the control will suspend ventilation override until the zone's temperature recovers. If after supplying plenum heat for the user-specified heat delay, the heat was insufficient to raise the zone's temperature, then heating will be enabled and will operate as per B.

I. Humidity control (option):
This mode is initiated when the zone is occupied and the primary air source is cooling. It occurs when the CCN control receives a cooling signal from the air source equipped with CCN controls, or when a primary air temperature sensor is installed to detect the air source operation is cooling. The control will monitor a relative humidity (RH) sensor (optional) and determine if the zone's RH is above the humidity set point. If the RH level is above the RH set point, the airflow control point is increased to displace the humid air in the space with air from the primary air source (which has a lower dew point). To ensure non-simultaneous operation of both heating and cooling, should the increased airflow cause the zone's temperature to fall below the heating set point, the control will first suspend the airflow override and reduce the airflow to the minimum cooling set point. The fan will operate to induce plenum air heat to warm the zone. If after supplying plenum heat for the user-specified heat delay, the heat was insufficient to raise the zone's temperature, then heating will be enabled and will operate as per B. The airflow override will resume when the zone's temperature recovers and be disabled once the zone's RH level falls below the zone's RH set point.

J. Damper override:
The damper override function is energized through the use of a field-supplied smoke control panel connected to the air source equipped with CCN controls. The smoke control panel and installation must be in accordance with UL864 and local codes. The damper override function overrides the airflow setting used by the logic. It will cause the terminal to provide the configured maximum cooling airflow when the air source is in the Pressurization mode, and to disable the fan (if operating) and fully close the primary air damper when the air source is in the Evacuation mode.

K. Nighttime free cooling:
The logic calculates a nighttime free cooling (NTFC) temperature set point halfway between the occupied heating and occupied cooling temperature set points. Upon receiving a NTFC signal generated by the air source equipped with CCN controls (or a primary air temperature sensor is installed to detect the air source is operating in the NTFC mode), the primary air damper will modulate between the maximum and minimum cooling airflow set points to maintain the zone's NTFC temperature set point. The terminal fan will remain off.

L. Primary air source shuts off:
1. The fan will be disabled unless the zone temperature falls below the heating set point (refer to C).
2. The damper will fully close and the control will recalibrate the airflow transducer.
3. If the primary air source remains off (no primary air), the damper will be repositioned to 50% open to allow the air source to restart.

JOB NAME	JOB NUMBER	LOCATION	PAGE NUMBER	DRAWING NUMBER
BUYER	BUYER #	SHEET	3 OF 4	45M/N/R-C-4744

CODE	Carrier A United Technologies Company	THIS DOCUMENT IS THE PROPERTY OF CARRIER CORPORATION AND IS DELIVERED UPON THE EXPRESS CONDITION THAT THE CONTENTS WILL NOT BE DISCLOSED OR USED WITHOUT CARRIER CORPORATION'S WRITTEN CONSENT	SUBMISSION OF THESE DRAWINGS OR DOCUMENTS DOES NOT CONSTITUTE PART PERFORMANCE OR ACCEPTANCE OF CONTRACT	ComfortID™ INTERMITTENT FAN	45 MC,NC,RC
CATALOG #					

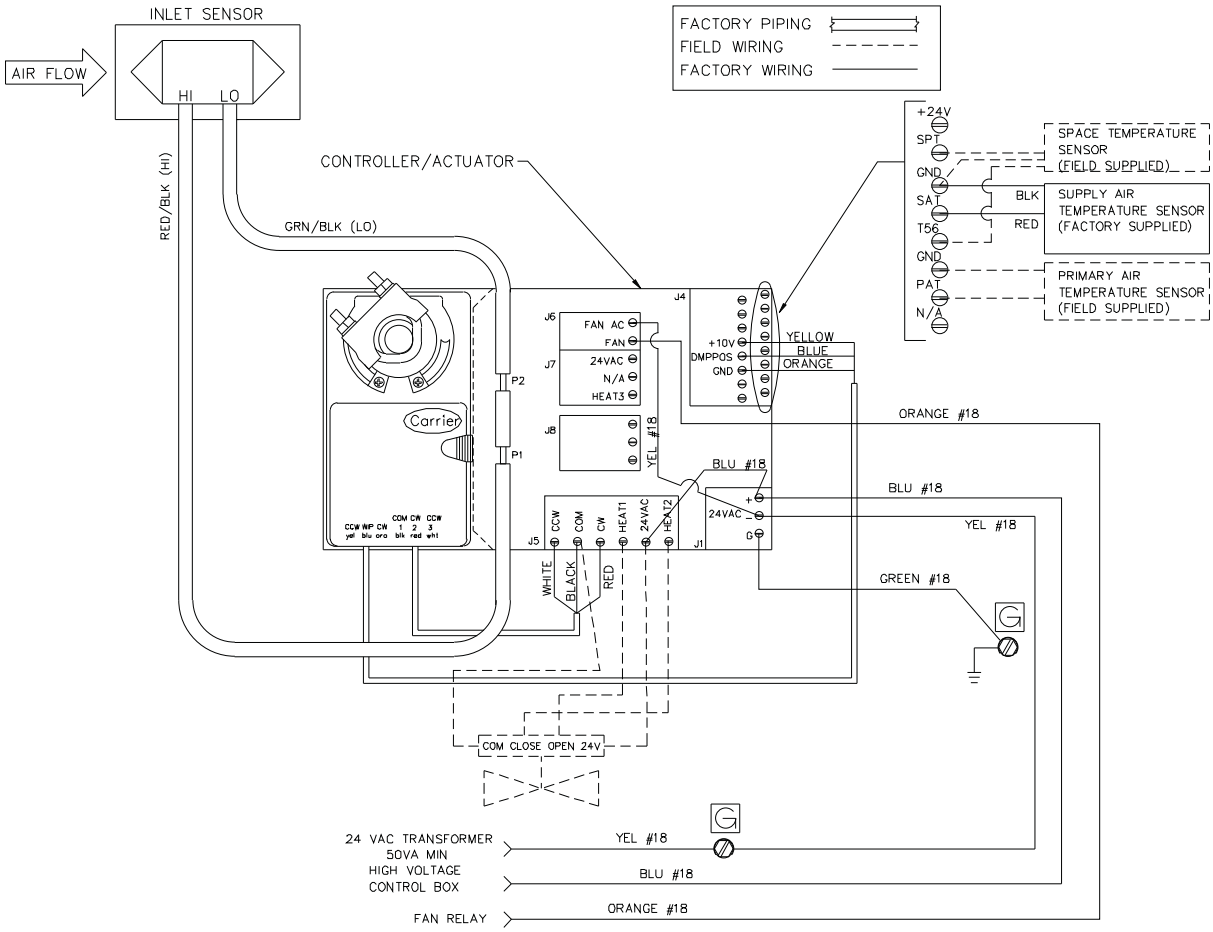

Notes:

1. For 45M/N/R units the Actuator is configured CW to close.

2. CAUTION:
   Electric shock may result. Disconnect unit prior to servicing unit.
3. These controls have been wired to comply with UL-1995.

PRODUCT INFORMATION IS SUBJECT TO CHANGE WITHOUT NOTICE.

JOB NAME	JOB NUMBER	LOCATION	PAGE NUMBER	DRAWING NUMBER
BUYER	BUYER #	SHEET	4 OF 4	45M/N/R-C-4744

CODE CATALOG #	Carrier A United Technologies Company	THIS DOCUMENT IS THE PROPERTY OF CARRIER CORPORATION AND IS DELIVERED UPON THE EXPRESS CONDITION THAT THE CONTENTS WILL NOT BE DISCLOSED OR USED WITHOUT CARRIER CORPORATION'S WRITTEN CONSENT.	SUBMISSION OF THESE DRAWINGS OR DOCUMENTS DOES NOT CONSTITUTE PART PERFORMANCE OR ACCEPTANCE OF CONTRACT.	ComfortID™ INTERMITTENT FAN	45 MC,NC,RC

ComfortID™ INTERMITTENT FAN POWERED TERMINAL UNIT CONTROL CARRIER CONTROL PACKAGE NO. 4752

Cooling with 3-Stage Field-Installed Electric Heat

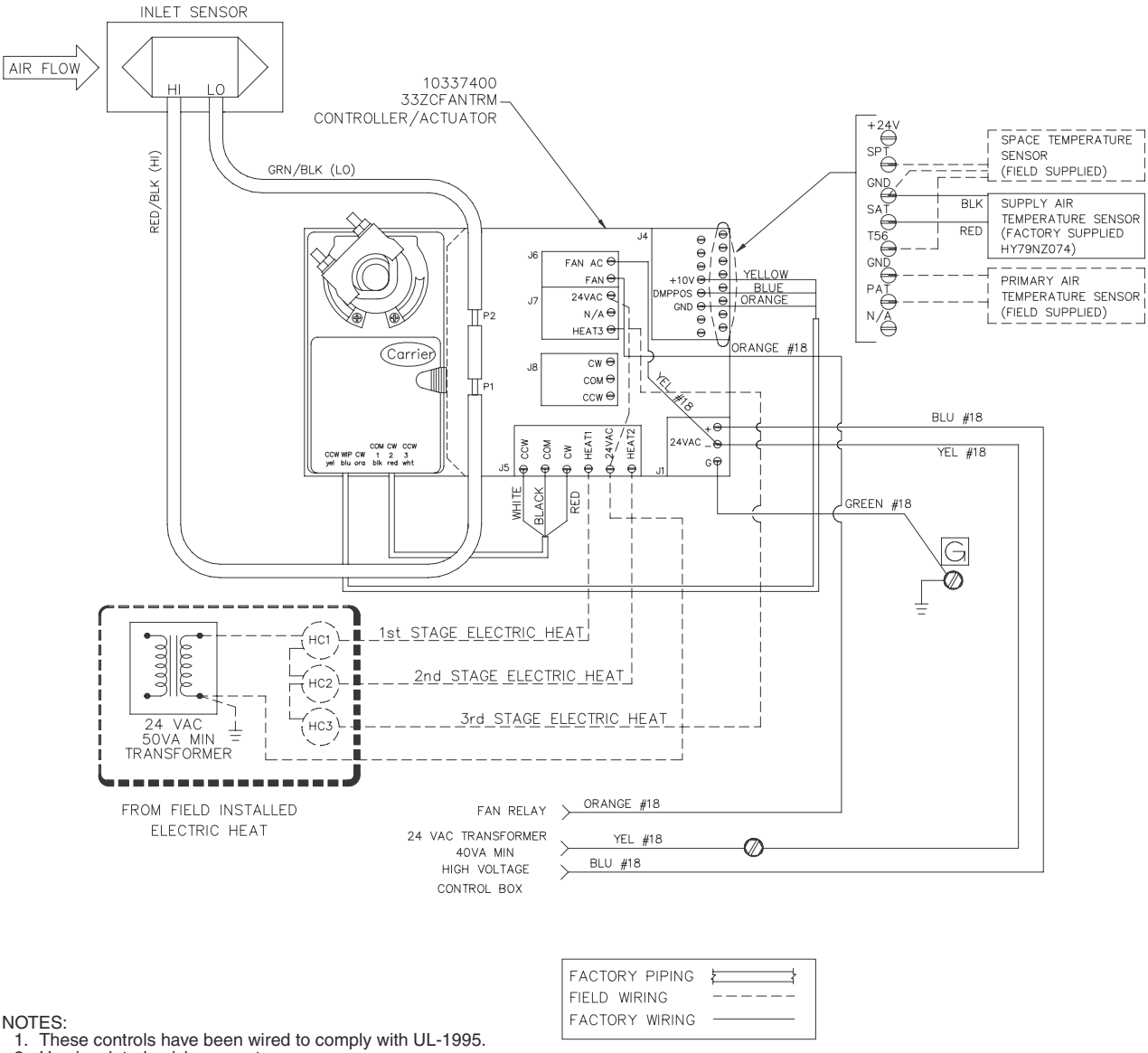

NOTES:
1. These controls have been wired to comply with UL-1995.
2. Use insulated quick connects.
3. Disconnect unit prior to servicing. Electric shock may result.
4. Verify actuator bushing is in the full clockwise position. Rotate damper clockwise to the fully closed position. Mount actuator over damper shaft and secure to shaft enclosure. Engage clutch and rotate damper counterclockwise to the fully open position.

PRODUCT INFORMATION IS SUBJECT TO CHANGE WITHOUT NOTICE. 02/15/2009

JOB NAME	JOB NUMBER	LOCATION	PAGE NUMBER	DRAWING NUMBER
BUYER	BUYER #	SHEET	1 OF 1	45M/N/R-C-4752

CODE CATALOG #	Carrier A United Technologies Company	THIS DOCUMENT IS THE PROPERTY OF CARRIER CORPORATION AND IS DELIVERED UPON THE EXPRESS CONDITION THAT THE CONTENTS WILL NOT BE DISCLOSED OR USED WITHOUT CARRIER CORPORATION'S WRITTEN CONSENT.	SUBMISSION OF THESE DRAWINGS OR DOCUMENTS DOES NOT CONSTITUTE PART PERFORMANCE OR ACCEPTANCE OF CONTRACT.	ComfortID™ INTERMITTENT FAN	45 MC,NC, RC

ComfortID™ INTERMITTENT FAN POWERED—WITH PROPORTIONAL ELECTRIC HEAT CARRIER CONTROL PACKAGE NO. 4754

Application:

Intermittent fan powered terminals are designed to provide heating and cooling for perimeter zones. These terminals are also used in interior zones, where a combination of primary air mixed with recirculated air provides increased air movement and improved ventilation. A typical application is shown in Fig. 1. Design, load requirements, downstream (external) static pressure, fan performance and sound level acceptability govern terminal selection and sizing. The terminal fan performance is selected to provide sufficient pressure to overcome the coil pressure drop and external static pressure. (It is important that the correct fan and fan speed be selected to ensure that sufficient airflow is available for the electric heat coil.) The controls provide variable air volume (VAV) control of the primary air for cooling and operate a proportional electric heating coil to supplement fan-induced plenum heat during heating. If enabled, a control option can energize the fan during cooling when the zone's cooling load falls below a user-adjustable minimum airflow set point. This feature prevents cold air 'dumping' from the diffusers, while providing improved ventilation at a lower minimum cooling airflow set points. (The fan set point is set to a CFM value slightly above the minimum cooling CFM set point.) When the primary air source is cooling, should the zone require heat, the fan operates to draw in air from the ceiling plenum to provide heat to the zone. The fan operates to provide ceiling plenum heat, and in addition, the proportional electric heat operates as required to supplement this heat. A wall-mounted space temperature (SPT) sensor located in each zone will sense load requirements and activate the control sequence to accommodate cooling or heating. This control package provides the following sequences of operation:

A. Cooling:

Refer to numbers on flow diagram. See Fig. 2.

1. Between 1 and 2, the maximum primary airflow is established by the user-defined maximum cooling airflow set point until the zone comes under control at 2. The fan is disabled.
2. Beginning at 2, the primary airflow is regulated over a throttling range by the damper until the minimum cooling airflow set point is reached at 3. (It must be noted that the minimum cooling airflow set point could be set to zero by the user. In this case, the damper will fully close if the zone temperature continues to fall.) Optionally, as the primary airflow is reduced, the fan operates to increase air circulation and improve ventilation when the primary airflow falls below the user-defined airflow set point.
3. Between 3 and 4, should the zone temperature continue to fall, the damper will hold the user-defined minimum cooling airflow set point.

B. Auxiliary electric heating when the primary air source is providing cooling:

Refer to numbers on flow diagram. See Fig. 2.

1. Should the zone temperature fall below the occupied heating set point, the Occupied Heating mode is in effect at 4.

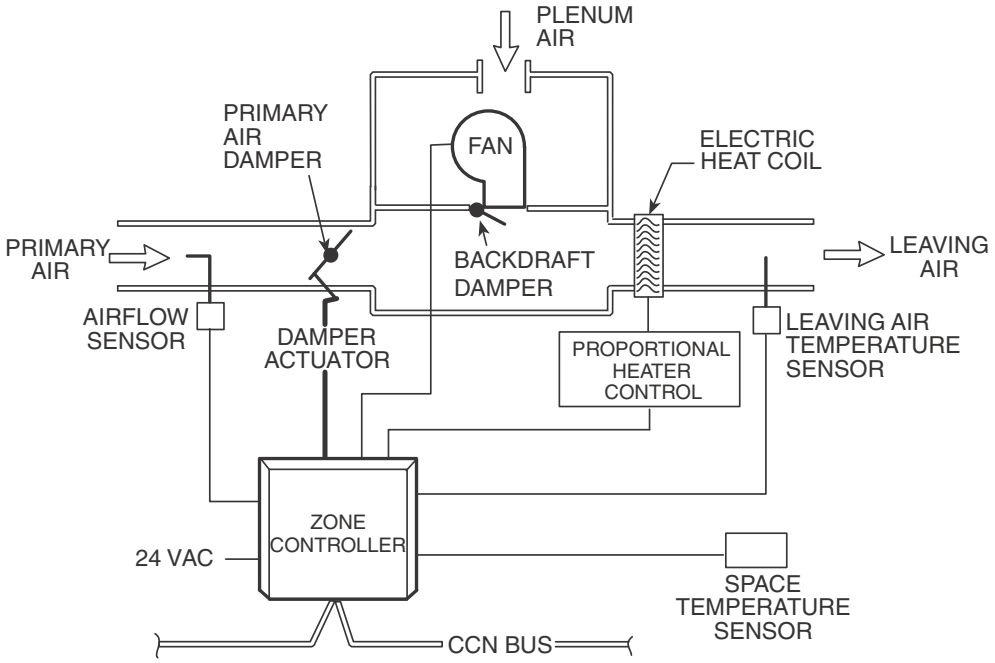

Figure 1 — Intermittent Fan Powered Air Terminal with Proportional Electric Heat

PRODUCT INFORMATION IS SUBJECT TO CHANGE WITHOUT NOTICE. 06/15/2007

JOB NAME	JOB NUMBER	LOCATION	PAGE NUMBER	DRAWING NUMBER
BUYER	BUYER #	SHEET	1 OF 4	45M/N/R-C-4754

2. The fan is energized to induce heated plenum air to warm the zone.
3. After supplying plenum heat for the user-specified heat delay, if the heat was insufficient to raise the zone's temperature, then at 5, the proportional electric heat will modulate to provide the necessary heat to the zone. The heater is controlled so as not to exceed the maximum discharge temperature. During the Heating mode, the primary airflow is maintain at the user-defined minimum cooling airflow set point.
4. When the zone temperature rises above the occupied heating set point, the heater output is reduced to zero. After an adjustable delay has expired, the fan is disabled and the Ventilation mode is activated at 4.

C. Heating when the primary air source is providing heated air:

Refer to numbers on flow diagram. See Fig. 2.

1. Upon receiving a heating signal generated by the air source equipped with CCN (Carrier Comfort Network®) controls (or a primary air temperature sensor is installed to detect that the air source is heating), should the zone temperature fall below the occupied heating set point, the Heating mode is in effect at 4'.
2. The damper will maintain the minimum heating airflow set point at 4'. The fan will be energized and the proportional electric heat will modulate as required to supplement the induced air heat from the ceiling plenum.
3. The control may be configured to provide variable volume heating. In that case the damper is throttled between the user-defined minimum heating airflow set point at 4' and the user-defined maximum heating airflow set point at 6. The fan will operate during this cycle. If VAV heating is enabled, it is important to limit the maximum heating set point so that the combined airflow of both the fan and the maximum heating set point do not exceed the maximum for the zone's diffusers.

D. Morning warm-up (configured to provide constant volume heating):

Upon receiving a morning warm-up signal generated by the air source equipped with CCN controls, the primary air damper will maintain the minimum heating airflow set point. The terminal fan will operate to provide plenum air to the space and the proportional electric heat will modulate as required to supplement the plenum heat. The heater is controlled so as not to exceed the maximum discharge temperature. The control may be configured to provide variable volume heating. In that case the damper is throttled between the user-defined minimum heating airflow set point at 4' and the user-defined maximum heating airflow set point at 6. The fan will operate during this cycle. If VAV heating is enabled, it is important to limit the maximum heating set point so that the combined airflow of both the fan and the maximum heating set point do not exceed the maximum for the zone's diffusers.

E. Unoccupied time period (cooling):

When the unoccupied period is reached, the user-defined occupied cooling set point is reset upward to a user-defined unoccupied cooling set point. If the primary air source is operating, the primary air damper will throttle in the same manner (as per A) during the unoccupied period, using the unoccupied cooling set point.

F. Unoccupied time period (auxiliary electric heating when the air source is off):

When the unoccupied period is reached, the user-defined occupied heating set point is reset downward to a user-defined unoccupied heating set point. If the zone's temperature falls below the unoccupied heating set point, the Unoccupied Heating mode is in effect. The terminal fan will start and the primary air damper will fully close. The proportional electric heat will modulate to supplement the plenum air heat as required. When the zone's temperature rises above the unoccupied heating set point, the heater output is reduced to zero. After the user-defined fan delay has expired, the fan will be disabled. The primary air damper will then be

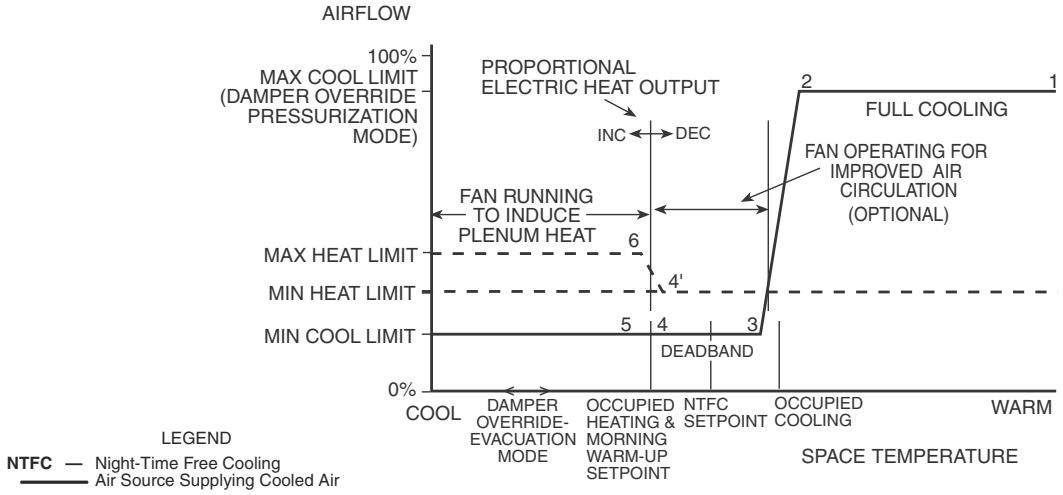

Figure 2 — Sequence of Operation for Intermittent Fan Powered Air Terminal with Proportional Electric Heat

opened to at least 50% to allow the primary air source to properly start.

G. Unoccupied time period (heating):

When the unoccupied period is reached, the user-defined occupied heating set point is reset downward to a userdefined unoccupied heating set point. The primary air damper will operate in the same manner (as per C) during the unoccupied period, using the unoccupied heating set point.

H. Demand controlled ventilation (option):

This mode is initiated when the zone is occupied and the air source is not heating. It occurs when the CCN control receives a cooling signal from the air source equipped with CCN controls, or when a primary air temperature sensor is installed to detect the air source operation is cooling. The control will monitor a CO_2 sensor (optional) and determine if ventilation is adequate. The zone CO_2 level is compared to the ventilation set point. If the CO_2 level is above the set point (insufficient ventilation), the airflow set point is increased appropriately to maintain proper ventilation. Should the zone's temperature fall below the heating set point, the control will suspend ventilation override until the zone's temperature recovers. If after supplying plenum heat for the user-specified heat delay, the heat was insufficient to raise the zone's temperature, then heating will be enabled and will operate as per B.

I. Humidity control (option):

This mode is initiated when the zone is occupied and the primary air source is cooling. It occurs when the CCN control receives a cooling signal from the air source equipped with CCN controls, or when a primary air temperature sensor is installed to detect the air source operation is cooling. The control will monitor a relative humidity (RH) sensor (optional) and determine if the zone's RH is above the humidity set point. If the RH level is above the RH set point, the airflow control point is increased to displace the humid air in the space with air from the primary air source (which has a lower dew point). To ensure non-simultaneous operation of both heating and cooling, should the increased airflow cause the zone's temperature to fall below the heating set point, the control will first suspend the airflow override and reduce the airflow to the minimum cooling set point. The fan will operate to induce plenum air heat to warm the zone. If after supplying plenum heat for the user-specified heat delay, the heat was insufficient to raise the zone's temperature, then heating will be enabled and will operate as per B. The airflow override will resume when the zone's temperature recovers and be disabled once the zone's RH level falls below the zone's RH set point.

J. Damper override:

The damper override function is energized through the use of a field-supplied smoke control panel connected to the air source equipped with CCN controls. The smoke control panel and installation must be in accordance with UL864 and local codes. The damper override function overrides the airflow setting used by the logic. It will cause the terminal to provide the configured maximum cooling airflow when the air source is in the Pressurization mode, and to disable the fan (if operating) and fully close the primary air damper when the air source is in the Evacuation mode.

K. Nighttime free cooling:

The logic calculates a nighttime free cooling (NTFC) temperature set point halfway between the occupied heating and occupied cooling temperature set points. Upon receiving a NTFC signal generated by the air source equipped with CCN controls (or a primary air temperature sensor is installed to detect the air source is operating in the NTFC mode), the primary air damper will modulate between the maximum and minimum cooling airflow set points to maintain the zone's NTFC temperature set point. The terminal fan will remain off.

L. Primary air source shuts off:

1. The fan will be disabled unless the zone temperature falls below the heating set point (refer to C).
2. The damper will fully close and the control will recalibrate the airflow transducer.
3. If the primary air source remains off (no primary air), the damper will be repositioned to 50% open to allow the air source to restart.

CODE CATALOG #	Carrier A United Technologies Company	THIS DOCUMENT IS THE PROPERTY OF CARRIER CORPORATION AND IS DELIVERED UPON THE EXPRESS CONDITION THAT THE CONTENTS WILL NOT BE DISCLOSED OR USED WITHOUT CARRIER CORPORATION'S WRITTEN CONSENT.	SUBMISSION OF THESE DRAWINGS OR DOCUMENTS DOES NOT CONSTITUTE PART PERFORMANCE OR ACCEPTANCE OF CONTRACT.	ComfortID™ INTERMITTENT FAN	45 MC,NC, RC

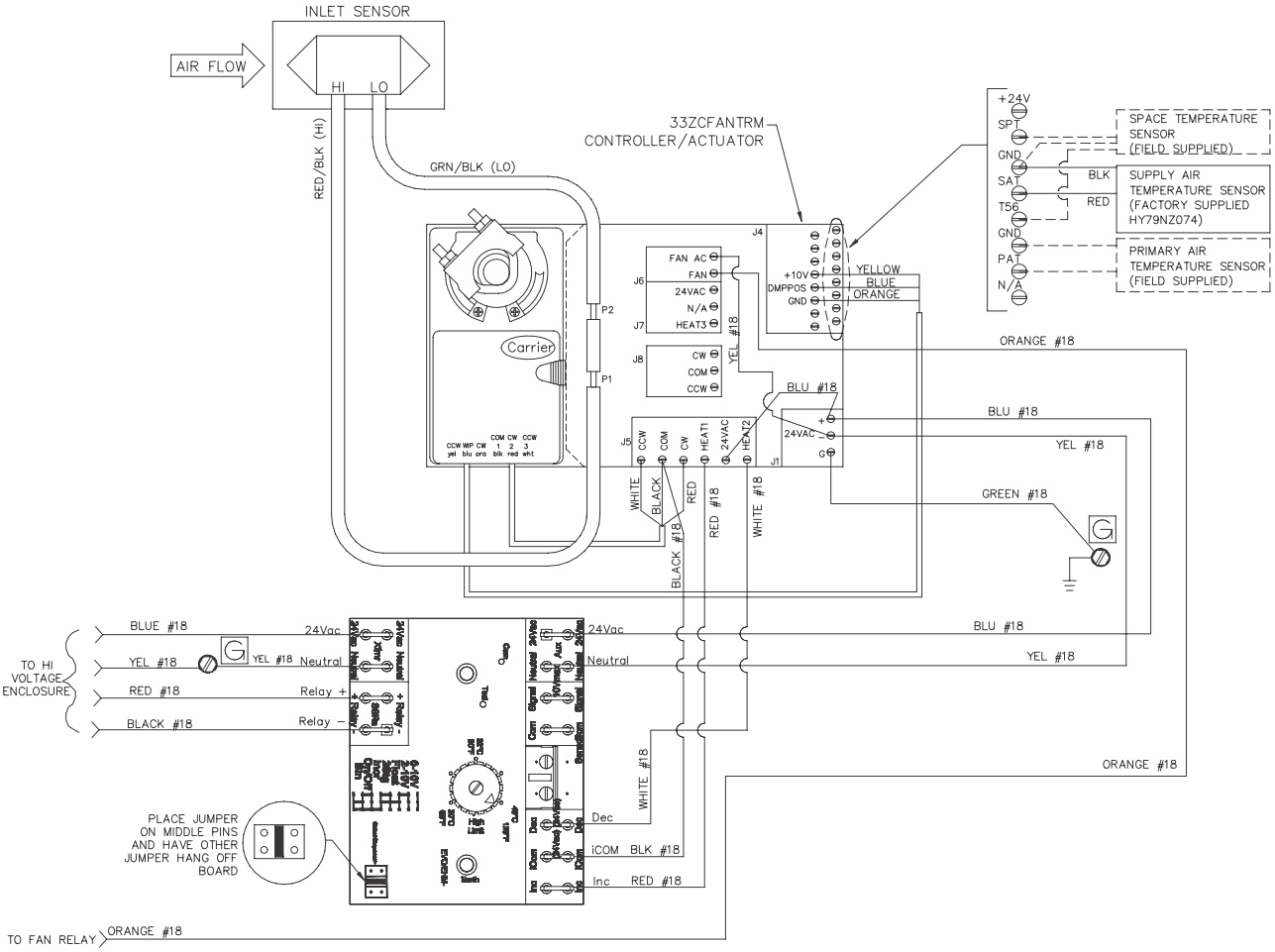

LEGEND

CCW	—	Counterclockwise
COM	—	Common
CW	—	Clockwise
DMPPOS	—	Damper Position
GND	—	Ground
PAT	—	Primary Air Temperature Sensor
SAT	—	Supply Air Temperature Sensor
SPT	—	Space Temperature Sensor
- - - -		Field-Supplied Wiring
———		Factory Wiring

NOTES:

1. For 45M/N units, the actuator is configured CW to close. For 45R units, the actuator is configured CCW to close.
2. CAUTION: Electric shock may result. Disconnect prior to servicing unit.
3. These controls have been wired to comply with UL-1995.

PRODUCT INFORMATION IS SUBJECT TO CHANGE WITHOUT NOTICE. 06/15/2007

JOB NAME	JOB NUMBER	LOCATION	PAGE NUMBER	DRAWING NUMBER
BUYER	BUYER #	SHEET	4 OF 4	45M/N/R-C-4754

CODE CATALOG #	Carrier A United Technologies Company	THIS DOCUMENT IS THE PROPERTY OF CARRIER CORPORATION AND IS DELIVERED UPON THE EXPRESS CONDITION THAT THE CONTENTS WILL NOT BE DISCLOSED OR USED WITHOUT CARRIER CORPORATION'S WRITTEN CONSENT	SUBMISSION OF THESE DRAWINGS OR DOCUMENTS DOES NOT CONSTITUTE PART PERFORMANCE OR ACCEPTANCE OF CONTRACT	CONSTANT VOLUME FAN	45 JD,KD,QD

BACnet CONSTANT VOLUME FAN—WITHOUT HEAT
CARRIER CONTROL PACKAGE NO. 4480

Application:

Fan powered constant volume terminals are designed to provide heating and cooling for perimeter zones. These terminals are also used in interior zones, where a constant volume of air (consisting of a combination of primary air mixed with recirculated air) provides the required air movement. A typical application is shown in Fig. 1. Design, load requirements, downstream (external) static pressure, fan performance and sound level acceptability govern terminal selection and sizing. The controls provide variable air volume (VAV) control of the primary air. As the primary airflow is reduced, the fan induces air from the plenum to provide a constant volume of air to the zone. These terminals require low inlet static pressure, permitting the use of smaller, more energy efficient primary air fan systems. A wall-mounted space temperature (SPT) sensor located in each zone will sense load requirements and activate the control sequence to accommodate cooling or heating. The control provides a fan start-up sequence to ensure proper rotation of the terminal's fan. Whenever the primary air source begins operation, the control will initiate the fan start-up sequence. Each control will provide a delay that is dependent on the control's address, before initiating the sequence. The delay prevents multiple terminals from performing the sequence simultaneously. The sequence will close the primary air damper fully to stop the primary airflow and allow the fan wheel to stop rotating, then will energize the terminal fan. The damper will then modulate to provide the primary airflow as required by the specific sequence of operation. This control package provides the following sequences of operations:

A. Cooling: (refer to numbers on flow diagram). See Fig. 2.
   1. 1-2 indicates that maximum primary airflow is established by the user-defined maximum cooling airflow set point until the zone comes under control at 2.
   2. Beginning at 2, the primary airflow is regulated over a throttling range by the damper until the minimum cooling airflow set point is reached at 3. The minimum cooling airflow set point can be set to zero by the user. In this case, the damper will fully close if the zone temperature continues to fall. As the primary airflow is reduced, the fan induces ceiling plenum air to maintain a constant air volume to the zone.
   3. 3-4 indicates that, should the zone temperature continue to fall, the damper will hold the user-defined minimum cooling airflow set point.

B. Heating: (when the primary air source is providing heated air, refer to numbers on flow diagram). See Fig. 2.
   1. Upon receiving a heating signal generated by the air source equipped with BACnet controls (or a primary air temperature sensor is installed to detect that the air source is heating), should the zone temperature fall below the occupied heating set point, the Heating mode is in effect at 4'.

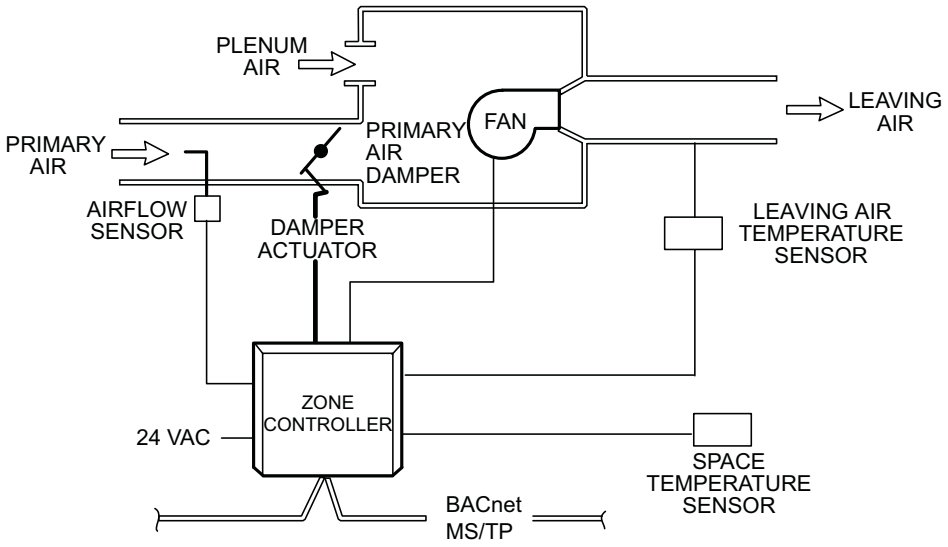

Figure 1 - Series Fan Powered Air Terminal—Without Heat

PRODUCT INFORMATION IS SUBJECT TO CHANGE WITHOUT NOTICE. 06/15/2010

JOB NAME	JOB NUMBER	LOCATION	PAGE NUMBER	DRAWING NUMBER
BUYER	BUYER #	SHEET	1 OF 4	45J/K/Q-D-4480

2. The damper is throttled between the user-defined minimum heating airflow set point at 4' and the user-defined maximum heating airflow set point at 6.
3. The control may be configured to provide constant volume heating. In that case the damper will maintain the minimum heating airflow set point at 4' to supply a constant volume of heated air to the zone.

C. Morning warm-up: Units configured to provide variable volume heating
Upon receiving a morning warm-up signal generated by the air source equipped with BACnet controls, the control will initiate the fan start-up sequence and enable the fan. After the fan is operating, the damper will go to the maximum heating airflow set point if the zone temperature is below the occupied heating set point at 6. This allows the warm primary air to be delivered to the zone. As the zone temperature rises above the occupied heating set point, the primary airflow will be reduced to the minimum heating airflow set point at 4'.

D. Unoccupied time period: (cooling)
When the unoccupied period is reached, the user-defined occupied cooling set point is reset upward to a user-defined unoccupied cooling set point. If the primary air source is operating, the primary air damper will throttle in the same manner (as per A) during the unoccupied period, using the unoccupied cooling set point. If the primary air source was not previously operating, the control will initiate the fan start-up sequence and enable the fan before modulating the primary air damper. If the primary air source is not operating, then the fan will remain off.

E. Unoccupied time period: (heating)
When the unoccupied period is reached, the user-defined occupied heating set point is reset downward to a user-defined unoccupied heating set point. If the primary air source is operating, the primary air damper will operate in the same manner (as per B) during the unoccupied period, using the unoccupied heating set point. If the primary air source was not previously operating, the control will initiate the fan start-up sequence and enable the fan before modulating the primary air damper. If the primary air source is not operating, then the fan will remain off.

F. Demand controlled ventilation (option):
This mode is initiated when the zone is occupied and the air source is not heating. It occurs when the BACnet control receives a cooling signal from the air source equipped with BACnet controls, or when a primary air temperature sensor is installed to detect the air source operation is cooling. The control will monitor a CO_2 sensor (optional) and determine if ventilation is adequate. The zone CO_2 level is compared to the ventilation set point. If the CO_2 level is above the set point (insufficient ventilation), the airflow set point is increased appropriately to maintain proper ventilation. Should the zone's temperature fall below the heating set point, the control will suspend ventilation override until the zone's temperature recovers.

G. Humidity control (option):
This mode is initiated when the zone is occupied and the primary air source is cooling. It occurs when the BACnet control receives a cooling signal from the air source equipped with BACnet controls, or when a primary air temperature sensor is installed to detect the air source operation in the Cooling mode. The control will monitor a relative humidity (RH) sensor (optional) and determine if the zone's RH is above the humidity set point. If the RH level is above the RH set point, the airflow control point is increased to displace the humid air in the space with air from the primary air source (which has a lower dew point). To ensure non-simultaneous operation of both heating and cooling, should the increased airflow cause the zone's temperature to fall below the heating set point, the control will first suspend the airflow override and reduce the airflow to the minimum cooling set point. This will cause the fan to induce plenum air heat to warm the zone. The airflow override will resume when the zone's temperature

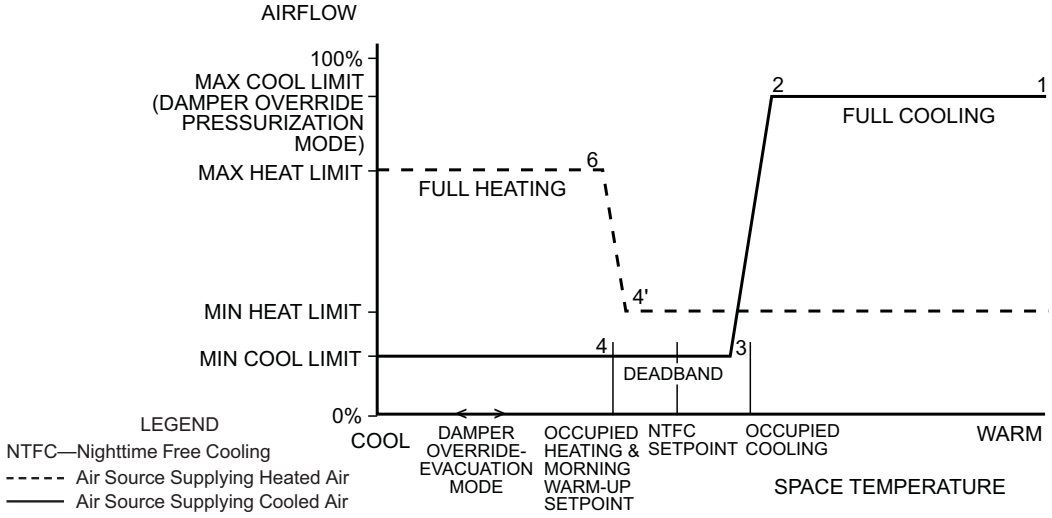

Figure 2 - Sequence of Operation for Series Fan Powered Air Terminal—Without Heat

JOB NAME	JOB NUMBER	LOCATION	PAGE NUMBER	DRAWING NUMBER
BUYER	BUYER #	SHEET	2 OF 4	45J/K/Q-D-4480

recovers and be disabled once the zone's RH level falls below the zone's RH set point.

H. Damper override:
The damper override function is energized through the use of a field-supplied smoke control panel connected to the air source equipped with BACnet controls. The smoke control panel and installation must be in accordance with UL864 and local codes. The damper override function overrides the airflow setting used by the logic. It will cause the terminal to operate the fan and provide the configured maximum cooling airflow when the air source is in the Pressurization mode, and to disable the fan and fully close the primary air damper when the air source is in the Evacuation mode.

I. Nighttime free cooling:
The logic calculates a nighttime free cooling (NTFC) temperature set point halfway between the occupied heating and occupied cooling temperature set points. Upon receiving a NTFC signal generated by the air source equipped with BACnet controls (or a primary air temperature sensor is installed to detect the air source is operating in the NTFC mode), the control will initiate the fan start-up sequence. Once the fan is operating, the primary air damper will modulate and throttle between the maximum and minimum cooling airflow set points to maintain the zone's NTFC temperature set point.

J. Primary air source shuts off:
1. The fan will be disabled.
2. The damper will fully close and the control will recalibrate the airflow transducer.
3. If the primary air source remains off (no primary air), the damper will be repositioned to 50% open to allow the air source to restart.

JOB NAME	JOB NUMBER	LOCATION	PAGE NUMBER	DRAWING NUMBER
BUYER	BUYER #	SHEET	3 OF 4	45J/K/Q-D-4480

CODE	Carrier A United Technologies Company	THIS DOCUMENT IS THE PROPERTY OF CARRIER CORPORATION AND IS DELIVERED UPON THE EXPRESS CONDITION THAT THE CONTENTS WILL NOT BE DISCLOSED OR USED WITHOUT CARRIER CORPORATION'S WRITTEN CONSENT	SUBMISSION OF THESE DRAWINGS OR DOCUMENTS DOES NOT CONSTITUTE PART PERFORMANCE OR ACCEPTANCE OF CONTRACT	CONSTANT VOLUME FAN	45
CATALOG #					JD,KD,QD

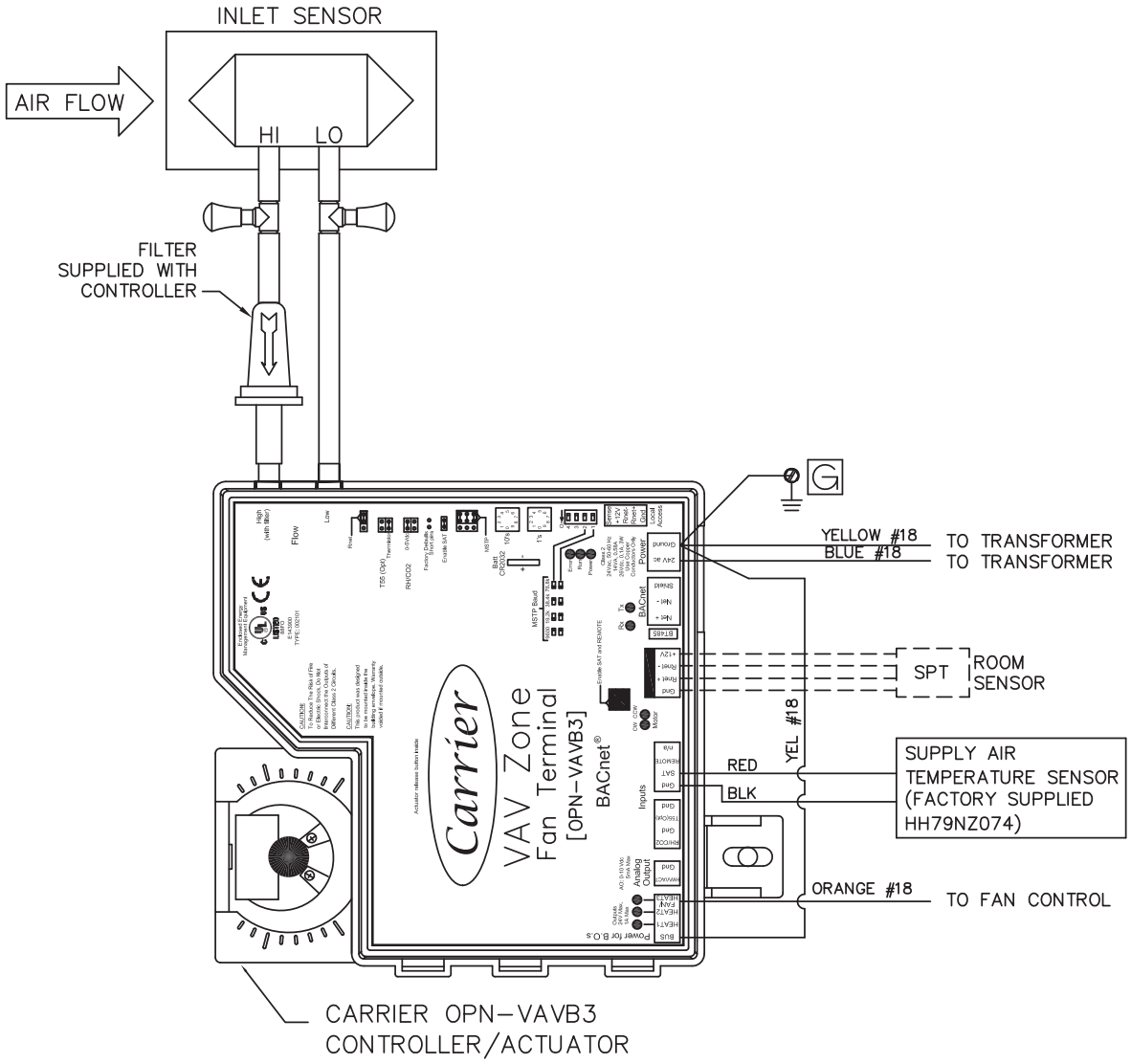

Notes:

1. For 45J/K/Q units the Actuator is configured CW to close.

2. <u>CAUTION:</u>
   Electric shock may result. Disconnect unit prior to servicing unit.
3. These controls have been wired to comply with UL-1995.

PRODUCT INFORMATION IS SUBJECT TO CHANGE WITHOUT NOTICE.

JOB NAME	JOB NUMBER	LOCATION	PAGE NUMBER	DRAWING NUMBER
BUYER	BUYER #	SHEET	4 OF 4	45J/K/Q-D-4480

CODE CATALOG #	Carrier A United Technologies Company	THIS DOCUMENT IS THE PROPERTY OF CARRIER CORPORATION AND IS DELIVERED UPON THE EXPRESS CONDITION THAT THE CONTENTS WILL NOT BE DISCLOSED OR USED WITHOUT CARRIER CORPORATION'S WRITTEN CONSENT	SUBMISSION OF THESE DRAWINGS OR DOCUMENTS DOES NOT CONSTITUTE PART PERFORMANCE OR ACCEPTANCE OF CONTRACT	CONSTANT VOLUME FAN	45 JD,KD,QD

BACnet CONSTANT VOLUME FAN—WITH UP TO 2 STAGES OF ELECTRIC HEAT CARRIER CONTROL PACKAGE NO. 4482

Application:

Fan powered constant volume terminals are designed to provide heating and cooling for perimeter zones. These terminals are also used in interior zones, where a constant volume of air (consisting of a combination of primary air mixed with recirculated air) provides the required air movement. A typical application is shown in Fig. 1. Design, load requirements, downstream (external) static pressure, fan performance and sound level acceptability govern terminal selection and sizing. The controls provide variable air volume (VAV) control of the primary air for cooling and may energize up to 2 stages of electric heat to supplement fan induced plenum heat during heating. As the primary airflow is reduced, the fan induces air from the plenum to provide a constant volume of air to the zone. These terminals require low inlet static pressure, permitting the use of smaller, more energy efficient primary air fan systems. A wall-mounted space temperature (SPT) sensor located in each zone will sense load requirements and activate the control sequence to accommodate cooling or heating. The control provides a fan start-up sequence to ensure proper rotation of the terminal's fan. Whenever the primary air source begins operation, the control will initiate the fan start-up sequence. Each control will provide a delay that is dependent on the control's address, before initiating the sequence. The delay prevents multiple terminals from performing the sequence simultaneously. The sequence will close the primary air damper fully to stop the primary airflow and allow the fan wheel to stop rotating, then will energize the terminal fan. The damper will then modulate to provide the primary airflow as required by the specific sequence of operation. This control package provides the following sequences of operations:

A. Cooling: (refer to numbers on flow diagram). See Fig. 2.
   1. 1-2 indicates that maximum primary airflow is established by the user-defined maximum cooling airflow set point until the zone comes under control at 2.
   2. Beginning at 2, the primary airflow is regulated over a throttling range by the damper until the minimum cooling airflow set point is reached at 3. The minimum cooling airflow set point can be set to zero by the user. In this case, the damper will fully close if the zone temperature continues to fall. As the primary airflow is reduced, the fan induces ceiling plenum air to maintain a constant air volume to the zone.
   3. 3-4 indicates that, should the zone temperature continue to fall, the damper will hold the user-defined minimum cooling airflow set point.

B. Auxiliary electric heating: (when the primary air source is cooling, refer to numbers on flow diagram). See Fig. 2. The installer is responsible that the temperature is no more than 120 F maximum discharge from the heating apparatus for safe and proper operation. Follow the manufacturer's recommendations for specific equipment.
   1. Should the zone temperature fall below the occupied heating set point, the Occupied Heating mode is in effect at 4.

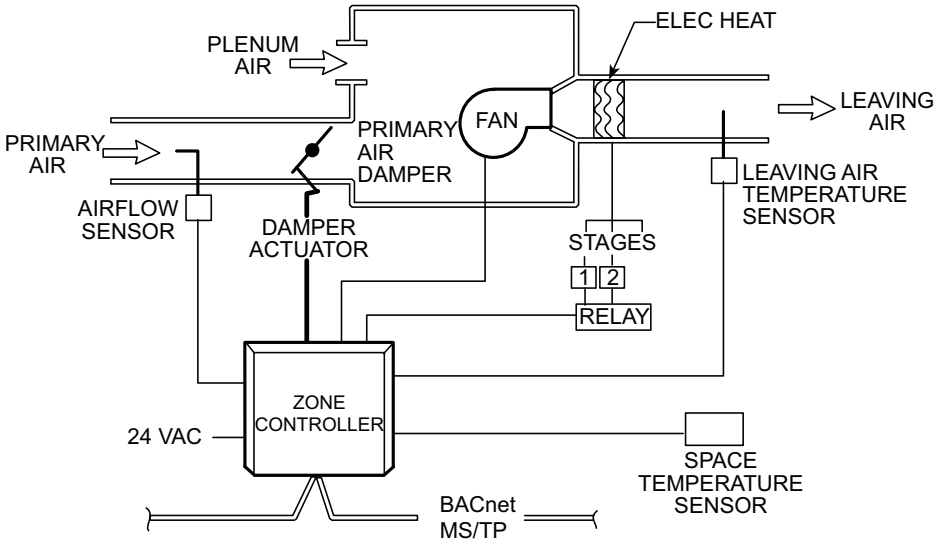

Figure 1 - Series Fan Powered Air Terminal With Staged Electric Heat

PRODUCT INFORMATION IS SUBJECT TO CHANGE WITHOUT NOTICE. 06/15/2010

JOB NAME	JOB NUMBER	LOCATION	PAGE NUMBER	DRAWING NUMBER
BUYER	BUYER #	SHEET	1 OF 4	45J/K/Q-D-4482

2. Up to 2 stages of electric heat (1h and 2h) are energized successively until all stages are activated as needed. The stages are controlled so as not to exceed the maximum discharge temperature limit. During the Heating mode, the primary airflow is maintain at the user-defined minimum cooling airflow set point.
3. When the zone temperature rises above the occupied heating set point, the heater stages are disabled; the Ventilation mode is reactivated at 4.

C. Heating: (when the primary air source is providing heated air, refer to numbers on flow diagram). See Fig. 2.

1. Upon receiving a heating signal generated by the air source equipped with BACnet controls (or a primary air temperature sensor is installed to detect that the air source is heating), should the zone temperature fall below the occupied heating set point, the Heating mode is in effect at 4'.
2. The primary air damper is throttled between the user-defined minimum heating airflow set point at 4' and the user-defined maximum heating airflow set point at 6. The stages of electric heat will operate as required to supplement the temperature of the mixture of induced plenum air and heated primary air. The heater is controlled so as not to exceed the maximum discharge temperature limit.
3. The control may be configured to provide minimum primary airflow during heating. In that case the primary air damper will maintain the minimum heating airflow set point at 4' to provide ventilation air to the zone. If the temperature of the mixture of induced plenum air and heated primary air is insufficient to meet the zone's heating requirements, electric heat will operate as required to supplement the temperature. The heater is controlled so as not to exceed the maximum discharge temperature limit.

D. Unoccupied time period: (cooling)
When the unoccupied period is reached, the user-defined occupied cooling set point is reset upward to a user-defined unoccupied cooling set point. If the primary air source is operating, the primary air damper will throttle in the same manner (as per A) during the unoccupied period, using the unoccupied cooling set point. If the primary air source was not previously operating, the control will initiate the fan start-up sequence and enable the fan before modulating the primary air damper. If the primary air source is not operating, then the fan will remain off.

E. Unoccupied time period: (auxiliary electric heating)
When the unoccupied period is reached, the user-defined occupied heating set point is reset downward to a user-defined unoccupied heating set point. If the primary air source is operating and the zone's temperature is below the unoccupied heating set point, the Unoccupied Heating mode is in effect.The primary air damper will fully close and the terminal fan will start. The electric heat stages will operate to supplement the plenum air heat as required limit.
When the zone's temperature rises above the unoccupied heating set point, the electric heat stages are disabled and the fan will stop after the user-defined fan delay has expired. The primary air damper will then be returned to a 50% open position to allow the primary air source to properly start.

F. Unoccupied time period: (heating)
When the unoccupied period is reached, the user-defined occupied heating set point is reset downward to a user-defined unoccupied heating set point. If the primary air source is operating, the primary air damper will operate in the same manner (as per C) during the unoccupied period, using the unoccupied heating set point. The electric heat stages will operate to supplement the temperature of the mixture of induced plenum air and primary air. If the primary air source was not previously operating, the control will initiate the fan start-up sequence and enable the fan before modulating the primary air damper. If the primary

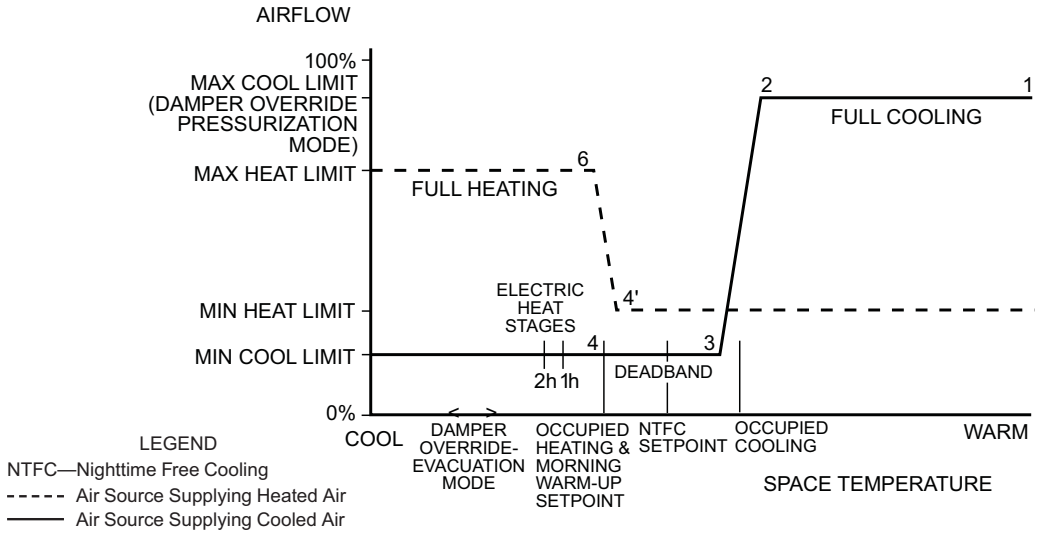

Figure 2 - Sequence of Operation for Series Fan Powered Air Terminal With Staged Electric Heat

JOB NAME	JOB NUMBER	LOCATION	PAGE NUMBER	DRAWING NUMBER
BUYER	BUYER #	SHEET	2 OF 4	45J/K/Q-D-4482

air source is not operating and the zone temperature is above the unoccupied heating set point, then the fan will remain off.

G. Morning warm-up: Units configured to provide variable volume heating
Upon receiving a morning warm-up signal generated by the air source equipped with CCN controls, the control will initiate the fan start-up sequence and enable the fan. After the fan is operating, the damper will go to the maximum heating airflow set point if the zone temperature is below the occupied heating set point at 6. The electric heat stages will operate to supplement the temperature of the air as required and controlled so as not exceed the maximum discharge temperature limit.

Follow the manufacturer's recommendations for specific equipment. As the zone temperature rises above the occupied heating set point, the electric heat stages are disabled (if any were previously operating) and the primary airflow will be reduced to the minimum heating airflow set point at 4'.

H. Demand controlled ventilation (option):
This mode is initiated when the zone is occupied and the air source is not heating. It occurs when the BACnet controls receives a cooling signal from the air source equipped with BACnet controls, or when a primary air temperature sensor is installed to detect the air source operation is cooling. The control will monitor a CO_2 sensor (optional) and determine if ventilation is adequate. The zone CO_2 level is compared to the ventilation set point. If the CO_2 level is above the set point (insufficient ventilation), the airflow set point is increased appropriately to maintain proper ventilation. Should the zone's temperature fall below the heating set point, the control will suspend ventilation override until the zone's temperature recovers. If after supplying plenum heat for the user-specified heat delay, the heat was insufficient to raise the zone's temperature, then heating will be enabled and will operate as per B.

I. Humidity control (option):
This mode is initiated when the zone is occupied and the primary air source is cooling. It occurs when the BACnet control receives a cooling signal from the air source equipped with BACnet controls, or when a primary air temperature sensor is installed to detect the air source operation is Cooling. The control will monitor a relative humidity (RH) sensor (optional) and determine if the zone's RH is above the humidity set point. If the RH level is above the RH set point, the airflow control point is increased to displace the humid air in the space with air from the primary air source (which has a lower dew point). To ensure non-simultaneous operation of both heating and cooling, should the increased airflow cause the zone's temperature to fall below the heating set point, the control will first suspend the airflow override and reduce the airflow to the minimum cooling set point. This will cause the fan to induce plenum air heat to warm the zone. If after supplying plenum heat for the user-specified heat delay, the heat was insufficient to raise the zone's temperature, then heating will be enabled and will operate as per B. The airflow override will resume when the zone's temperature recovers and be disabled once the zone's RH level falls below the zone's RH set point.

J. Damper override:
The damper override function is energized through the use of a field-supplied smoke control panel connected to the air source equipped with BACnet controls. The smoke control panel and installation must be in accordance with UL864 and local codes. The damper override function overrides the airflow setting used by the logic. It will cause the terminal to operate the fan and provide the configured maximum cooling airflow when the air source is in the Pressurization mode, and to disable the fan and fully close the primary air damper when the air source is in the Evacuation mode.

K. Nighttime free cooling:
The logic calculates a nighttime free cooling (NTFC) temperature set point halfway between the occupied heating and occupied cooling temperature set points. Upon receiving a NTFC signal generated by the air source equipped with BACnet controls (or a primary air temperature sensor is installed to detect the air source is operating in the NTFC mode), the control will initiate the fan start-up sequence. Once the fan is operating, the primary air damper will modulate and throttle between the maximum and minimum cooling airflow set points to maintain the zone's NTFC temperature set point.

L. Primary air source shuts off:
1. The fan will be disabled unless the zone temperature falls below the heating set point (refer to E).
2. The damper will fully close and the control will recalibrate the airflow transducer.
3. If the primary air source remains off (no primary air), the damper will be repositioned to 50% open to allow the air source to restart.

JOB NAME	JOB NUMBER	LOCATION	PAGE NUMBER	DRAWING NUMBER
BUYER	BUYER #	SHEET	3 OF 4	45J/K/Q-D-4482

CODE	Carrier A United Technologies Company	THIS DOCUMENT IS THE PROPERTY OF CARRIER CORPORATION AND IS DELIVERED UPON THE EXPRESS CONDITION THAT THE CONTENTS WILL NOT BE DISCLOSED OR USED WITHOUT CARRIER CORPORATION'S WRITTEN CONSENT	SUBMISSION OF THESE DRAWINGS OR DOCUMENTS DOES NOT CONSTITUTE PART PERFORMANCE OR ACCEPTANCE OF CONTRACT	CONSTANT VOLUME FAN	45 JD,KD,QD
CATALOG #					

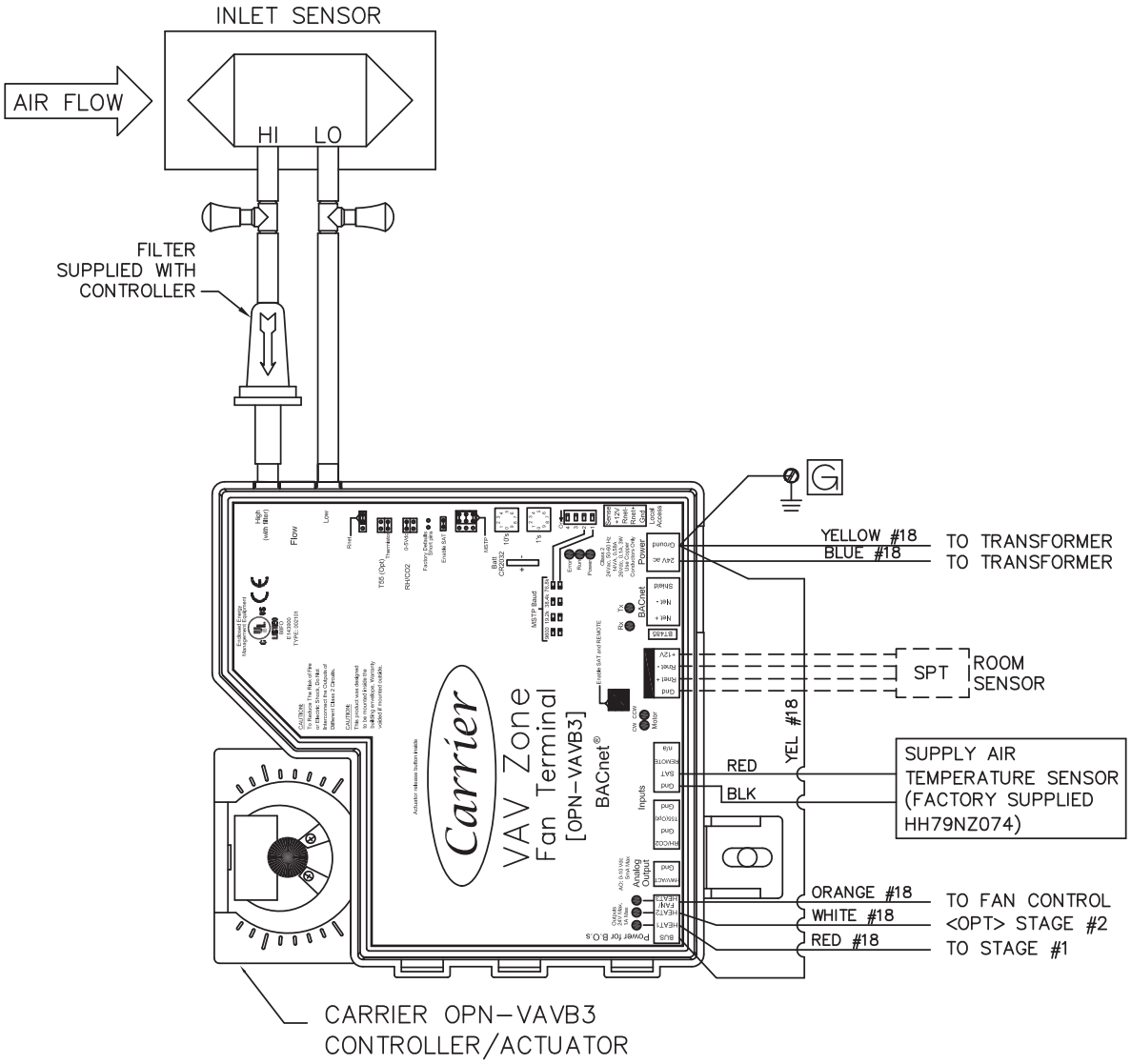

Notes:

1. For 45J/K/Q units the Actuator is configured CW to close.

2. CAUTION:
   Electric shock may result. Disconnect unit prior to servicing unit.
3. These controls have been wired to comply with UL-1995.

PRODUCT INFORMATION IS SUBJECT TO CHANGE WITHOUT NOTICE.

JOB NAME	JOB NUMBER	LOCATION	PAGE NUMBER	DRAWING NUMBER
BUYER	BUYER #	SHEET	4 OF 4	45J/K/Q-D-4482

CODE CATALOG #	Carrier A United Technologies Company	THIS DOCUMENT IS THE PROPERTY OF CARRIER CORPORATION AND IS DELIVERED UPON THE EXPRESS CONDITION THAT THE CONTENTS WILL NOT BE DISCLOSED OR USED WITHOUT CARRIER CORPORATION'S WRITTEN CONSENT	SUBMISSION OF THESE DRAWINGS OR DOCUMENTS DOES NOT CONSTITUTE PART PERFORMANCE OR ACCEPTANCE OF CONTRACT	CONSTANT VOLUME FAN	45 JD,KD,QD

BACnet CONSTANT VOLUME FAN—WITH ON/OFF HOT WATER HEAT CARRIER CONTROL PACKAGE NO. 4483

Application:

Fan powered constant volume terminals are designed to provide heating and cooling for perimeter zones. These terminals are also used in interior zones, where a constant volume of air (consisting of a combination of primary air mixed with recirculated air) provides the required air movement. A typical application is shown in Fig. 1. Design, load requirements, downstream (external) static pressure, fan performance and sound level acceptability govern terminal selection and sizing. The terminal fan performance is selected to provide sufficient pressure to overcome the coil pressure drop and external static pressure, permitting the use of smaller, more energy efficient primary air fan systems. (It is important that the correct fan and fan speed be selected to ensure that sufficient Btu's can be delivered to meet the heating and cooling load requirements.)The controls provide variable air volume (VAV) control of the primary air for cooling and may operate a two-position heating valve connected to a heating coil to supplement fan induced plenum heat during heating. As the primary airflow is reduced, the fan induces air from the plenum to provide a constant volume of air to the zone. A wall-mounted space temperature (SPT) sensor located in each zone will sense load requirements and activate the control sequence to accommodate cooling or heating. The control provides a fan start-up sequence to ensure proper rotation of the terminal's fan. Whenever the primary air source begins operation, the control will initiate the fan start-up sequence. Each control will provide a delay that is dependent on the control's address, before initiating the sequence. The delay prevents multiple terminals from performing the sequence simultaneously. The sequence will close the primary air damper fully to stop the primary airflow and allow the fan wheel to stop rotating, then will energize the terminal fan. The damper will then modulate to provide the primary airflow as required by the specific sequence of operation. This control package provides the following sequences of operations:

A. Cooling: (refer to numbers on flow diagram). See Fig. 2.
   1. 1-2 indicates that maximum primary airflow is established by the user-defined maximum cooling airflow set point until the zone comes under control at 2.
   2. Beginning at 2, the primary airflow is regulated over a throttling range by the damper until the minimum cooling airflow set point is reached at 3. The minimum cooling airflow set point can be set to zero by the user. In this case, the damper will fully close if the zone temperature continues to fall. As the primary airflow is reduced, the fan induces ceiling plenum air to maintain a constant air volume to the zone.
   3. 3-4 indicates that, should the zone temperature continue to fall, the damper will hold the user-defined minimum cooling airflow set point.

B. Auxiliary hot water heating: (when the primary air source is cooling, refer to numbers on flow diagram). See Fig. 2. The installer is responsible for proper selection of the fan speed to provide sufficient airflow through the heating coil.

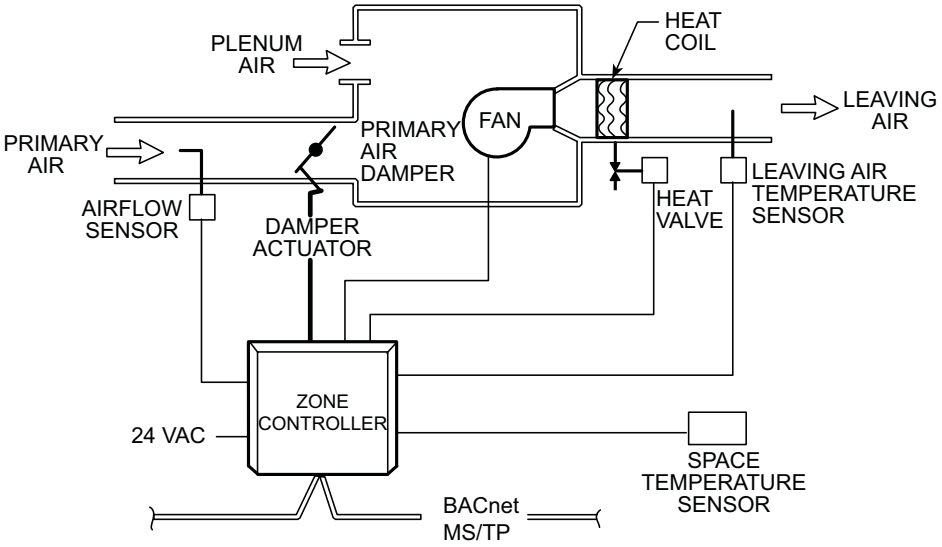

Figure 1 - Series Fan Powered Air Terminal With Two-Position Hot Water Heat

PRODUCT INFORMATION IS SUBJECT TO CHANGE WITHOUT NOTICE. 06/15/2010

JOB NAME	JOB NUMBER	LOCATION	PAGE NUMBER	DRAWING NUMBER
BUYER	BUYER #	SHEET	1 OF 4	45J/K/Q-D-4483

1. Should the zone temperature fall below the occupied heating set point, the Occupied Heating mode is in effect at 4.
2. At 5, the on/off hot water valve will open to provide heating and satisfy the load requirements. The valve is controlled so as not to exceed the maximum discharge temperature limit. The primary airflow is maintain at the user-defined minimum cooling airflow set point.
3. When the zone temperature rises above the occupied heating set point, the valve closes and the Ventilation mode is reactivated at 4.

C. Heating: (when the primary air source is providing heated air, refer to numbers on flow diagram). See Fig. 2.

1. Upon receiving a heating signal generated by the air source equipped with BACnet controls (or a primary air temperature sensor is installed to detect that the air source is heating), should the zone temperature fall below the occupied heating set point, the Heating mode is in effect at 4'.
2. The primary air damper is throttled between the user-defined minimum heating airflow set point at 4' and the user-defined maximum heating airflow set point at 6. The hot water valve will open if required to supplement the temperature of the mixture of induced plenum air and heated primary air. The valve is controlled so as not to exceed the maximum discharge temperature.
3. The control may be configured to provide minimum primary airflow during heating. In that case the primary air damper will maintain the minimum heating airflow set point at 4' to provide ventilation air to the zone. If the temperature of the mixture of induced plenum air and heated primary air is insufficient to meet the zone's heating requirements, the hot water valve will operate as required. The valve is controlled so as not to exceed the maximum discharge temperature.

D. Unoccupied time period: (cooling)
When the unoccupied period is reached, the user-defined occupied cooling set point is reset upward to a user-defined unoccupied cooling set point. If the primary air source is operating, the primary air damper will throttle in the same manner (as per A) during the unoccupied period, using the unoccupied cooling set point. If the primary air source was not previously operating, the control will initiate the fan start-up sequence and enable the fan before modulating the primary air damper. If the primary air source is not operating, then the fan will remain off.

E. Unoccupied time period: (auxiliary hot water heating)
When the unoccupied period is reached, the user-defined occupied heating set point is reset downward to a user-defined unoccupied heating set point. If the primary air source is not operating and the zone's temperature is below the unoccupied heating set point, the Unoccupied Heating mode is in effect.The primary air damper will fully close and the terminal fan will start. The hot water valve will open to supplement the plenum air heat as required. When the zone's temperature rises above the unoccupied heating set point, the valve will close and the fan will stop after the user-specified fan delay has expired. The primary air damper will then be returned to a 50% open position to allow the primary air source to properly start.

F. Unoccupied time period: (heating)
When the unoccupied period is reached, the user-defined occupied heating set point is reset downward to a user-defined unoccupied heating set point. If the primary air source is operating, the primary air damper will operate in the same manner (as per C) during the unoccupied period, using the unoccupied heating set point. The hot water valve will operate as required to supplement the temperature of the mixture of induced plenum air and primary air. If the primary air source was not previously operating, the control will initiate the fan start-up sequence and enable the fan before modulating the primary air damper. If the

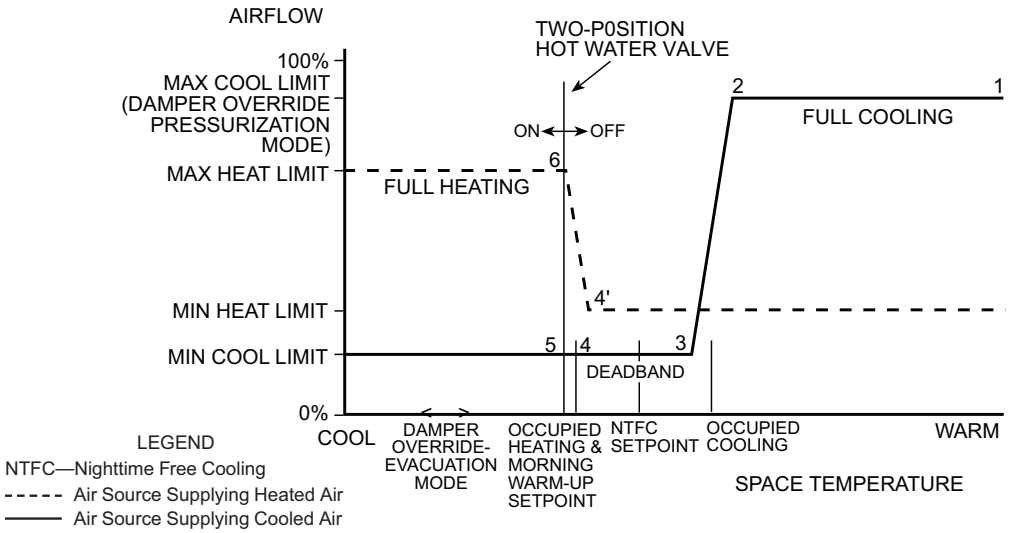

Figure 2 - Sequence of Operation for Series Fan Powered Air Terminal With Two-Position Hot Water Heat

JOB NAME	JOB NUMBER	LOCATION	PAGE NUMBER	DRAWING NUMBER
BUYER	BUYER #	SHEET	2 OF 4	45J/K/Q-D-4483

primary air source is not operating and the zone temperature is above the unoccupied heating set point, then the fan will remain off.

G. Morning warm-up: Units configured to provide variable volume heating
Upon receiving a morning warm-up signal generated by the air source equipped with BACnet controls, the control will initiate the fan start-up sequence and enable the fan. After the fan is operating, the damper will go to the maximum heating airflow set point if the zone temperature is below the occupied heating set point at 6. The hot water valve will open if required to supplement the temperature of the air and controlled so as not exceed the maximum discharge temperature limit. As the zone temperature rises above the occupied heating set point, the hot water valve will close (if previously open) and the primary airflow will be reduced to the minimum heating airflow set point at 4'.

H. Demand controlled ventilation (option):
This mode is initiated when the zone is occupied and the air source is not heating. It occurs when the BACnet control receives a cooling signal from the air source equipped with BACnet controls, or when a primary air temperature sensor is installed to detect the air source operation is cooling. The control will monitor a CO_2 sensor (optional) and determine if ventilation is adequate. The zone CO_2 level is compared to the ventilation set point. If the CO_2 level is above the set point (insufficient ventilation), the airflow set point is increased appropriately to maintain proper ventilation. Should the zone's temperature fall below the heating set point, the control will suspend ventilation override until the zone's temperature recovers. If after supplying plenum heat for the user-specified heat delay, the heat was insufficient to raise the zone's temperature, then heating will be enabled and will operate as per B.

I. Humidity control (option):
This mode is initiated when the zone is occupied and the primary air source is cooling. It occurs when the BACnet control receives a cooling signal from the air source equipped with BACnet controls, or when a primary air temperature sensor is installed to detect the air source operation is Cooling. The control will monitor a relative humidity (RH) sensor (optional) and determine if the zone's RH is above the humidity set point. If the RH level is above the RH set point, the airflow control point is increased to displace the humid air in the space with air from the primary air source (which has a lower dew point). To ensure non-simultaneous operation of both heating and cooling, should the increased airflow cause the zone's temperature to fall below the heating set point, the control will first suspend the airflow override and reduce the airflow to the minimum cooling set point. This will cause the fan to induce plenum air heat to warm the zone. If after supplying plenum heat for the user-specified heat delay, the heat was insufficient to raise the zone's temperature, then heating will be enabled and will operate as per B. The airflow override will resume when the zone's temperature recovers and be disabled once the zone's RH level falls below the zone's RH set point.

J. Damper override:
The damper override function is energized through the use of a field-supplied smoke control panel connected to the air source equipped with BACnet controls. The smoke control panel and installation must be in accordance with UL864 and local codes. The damper override function overrides the airflow setting used by the logic. It will cause the terminal to operate the fan and provide the configured maximum cooling airflow when the air source is in the Pressurization mode, and to disable the fan and fully close the primary air damper when the air source is in the Evacuation mode.

K. Nighttime free cooling:
The logic calculates a nighttime free cooling (NTFC) temperature set point halfway between the occupied heating and occupied cooling temperature set points. Upon receiving a NTFC signal generated by the air source equipped with BACnet controls (or a primary air temperature sensor is installed to detect the air source is operating in the NTFC mode), the control will initiate the fan start-up sequence. Once the fan is operating, the primary air damper will modulate and throttle between the maximum and minimum cooling airflow set points to maintain the zone's NTFC temperature set point.

L. Primary air source shuts off:
1. The fan will be disabled unless the zone temperature falls below the heating set point (refer to E).
2. The damper will fully close and the control will recalibrate the airflow transducer.
3. If the primary air source remains off (no primary air), the damper will be repositioned to 50% open to allow the air source to restart.

JOB NAME	JOB NUMBER	LOCATION	PAGE NUMBER	DRAWING NUMBER
BUYER	BUYER #	SHEET	3 OF 4	45J/K/Q-D-4483

CODE CATALOG #	Carrier A United Technologies Company	THIS DOCUMENT IS THE PROPERTY OF CARRIER CORPORATION AND IS DELIVERED UPON THE EXPRESS CONDITION THAT THE CONTENTS WILL NOT BE DISCLOSED OR USED WITHOUT CARRIER CORPORATION'S WRITTEN CONSENT	SUBMISSION OF THESE DRAWINGS OR DOCUMENTS DOES NOT CONSTITUTE PART PERFORMANCE OR ACCEPTANCE OF CONTRACT	CONSTANT VOLUME FAN	45 JD,KD,QD

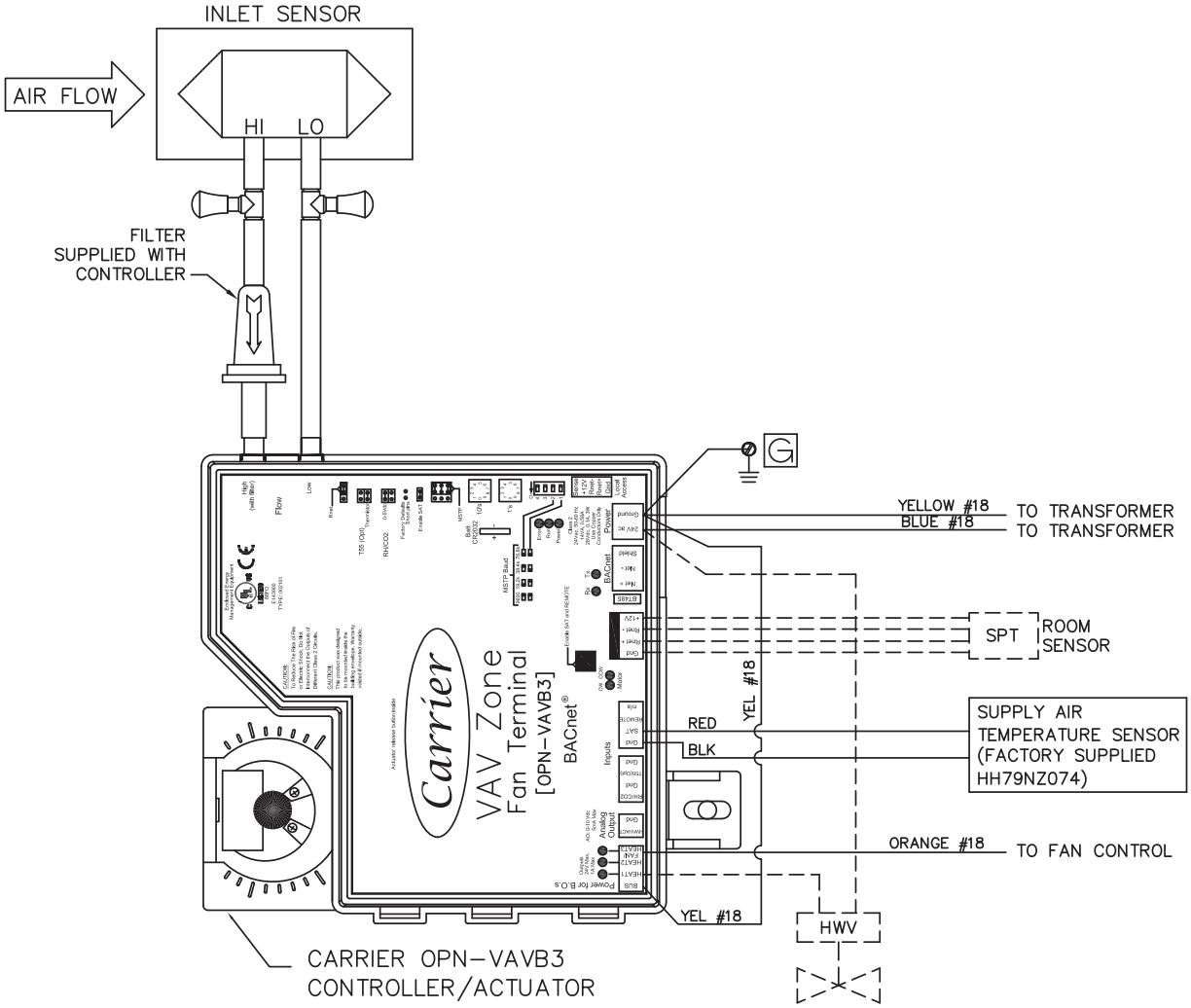

Notes:

1. For 45J/K/Q units the Actuator is configured CW to close.

2. <u>CAUTION:</u>
   Electric shock may result. Disconnect unit prior to servicing unit.
3. These controls have been wired to comply with UL-1995.

PRODUCT INFORMATION IS SUBJECT TO CHANGE WITHOUT NOTICE.

JOB NAME	JOB NUMBER	LOCATION	PAGE NUMBER	DRAWING NUMBER
BUYER	BUYER #	SHEET	4 OF 4	45J/K/Q-D-4483

CODE CATALOG #	Carrier A United Technologies Company	THIS DOCUMENT IS THE PROPERTY OF CARRIER CORPORATION AND IS DELIVERED UPON THE EXPRESS CONDITION THAT THE CONTENTS WILL NOT BE DISCLOSED OR USED WITHOUT CARRIER CORPORATION'S WRITTEN CONSENT	SUBMISSION OF THESE DRAWINGS OR DOCUMENTS DOES NOT CONSTITUTE PART PERFORMANCE OR ACCEPTANCE OF CONTRACT	CONSTANT VOLUME FAN	45 JD,KD,QD

BACnet CONSTANT VOLUME FAN—WITH PROPORTIONAL (FLOATING) HOT WATER HEAT CARRIER CONTROL PACKAGE NO. 4484

Application:

Fan powered constant volume terminals are designed to provide heating and cooling for perimeter zones. These terminals are also used in interior zones, where a constant volume of air (consisting of a combination of primary air mixed with recirculated air) provides the required air movement. A typical application is shown in Fig. 1. Design, load requirements, downstream (external) static pressure, fan performance and sound level acceptability govern terminal selection and sizing. The terminal fan performance is selected to provide sufficient pressure to overcome the coil pressure drop and external static pressure, permitting the use of smaller, more energy efficient primary air fan systems. (It is important that the correct fan and fan speed be selected to ensure that sufficient Btu's can be delivered to meet the heating and cooling load requirements.)The controls provide variable air volume (VAV) control of the primary air for cooling and operate a modulating hot water valve connected to a heating coil to supplement fan induced plenum heat during heating. As the primary airflow is reduced, the fan induces air from the plenum to provide a constant volume of air to the zone. A wall-mounted space temperature (SPT) sensor located in each zone will sense load requirements and activate the control sequence to accommodate cooling or heating. The control provides a fan start-up sequence to ensure proper rotation of the terminal's fan. Whenever the primary air source begins operation, the control will initiate the fan start-up sequence. Each control will provide a delay that is dependent on the control's address, before initiating the sequence. The delay prevents multiple terminals from performing the sequence simultaneously. The sequence will close the primary air damper fully to stop the primary airflow and allow the fan wheel to stop rotating, then will energize the terminal fan. The damper will then modulate to provide the primary airflow as required by the specific sequence of operation. This control package provides the following sequences of operations:

A. Cooling: (refer to numbers on flow diagram). See Fig. 2.
   1. 1-2 indicates that maximum primary airflow is established by the user-defined maximum cooling airflow set point until the zone comes under control at 2.
   2. Beginning at 2, the primary airflow is regulated over a throttling range by the damper until the minimum cooling airflow set point is reached at 3. The minimum cooling airflow set point can be set to zero by the user. In this case, the damper will fully close if the zone temperature continues to fall. As the primary airflow is reduced, the fan induces ceiling plenum air to maintain a constant air volume to the zone.
   3. 3-4 indicates that, should the zone temperature continue to fall, the damper will hold the user-defined minimum cooling airflow set point.

B. Auxiliary hot water heating: (when the primary air source is cooling, refer to numbers on flow diagram). See Fig. 2. The installer is responsible for proper selection of the fan speed to provide sufficient airflow through the heating coil.

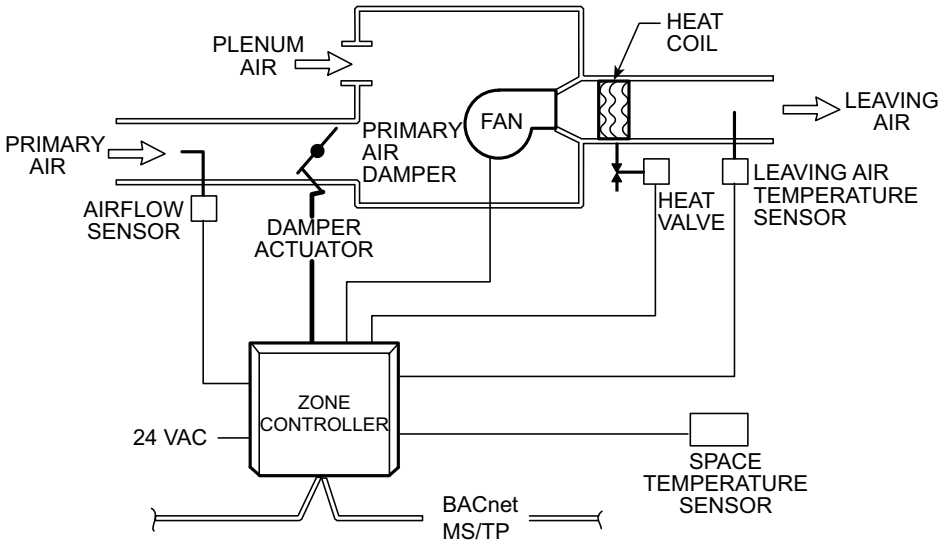

Figure 1 - Series Fan Powered Air Terminal With Proportional Hot Water Heat

1. Should the zone temperature fall below the occupied heating set point, the Occupied Heating mode is in effect at 4.
2. At 5, the hot water valve will modulate open as required to provide heating and satisfy the load requirements. The valve is controlled so as not to exceed the maximum discharge temperature limit. The primary airflow is maintain at the user-defined minimum cooling airflow set point.
3. When the zone temperature rises above the occupied heating set point, the valve modulates closed and the Ventilation mode is reactivated at 4.

C. Heating: (when the primary air source is providing heated air, refer to numbers on flow diagram). See Fig. 2.

1. Upon receiving a heating signal generated by the air source equipped with BACnet controls (or a primary air temperature sensor is installed to detect that the air source is heating), should the zone temperature fall below the occupied heating set point, the Heating mode is in effect at 4'.
2. The primary air damper is throttled between the user-defined minimum heating airflow set point at 4' and the user-defined maximum heating airflow set point at 6. The hot water valve modulates as required to supplement the temperature of the mixture of induced plenum air and heated primary air. The valve is controlled so as not to exceed the maximum discharge temperature.
3. The control may be configured to provide minimum primary airflow during heating. In that case the primary air damper will maintain the minimum heating airflow set point at 4' to provide ventilation air to the zone. The hot water valve will modulate as required to condition the discharge air to meet the zone's heating requirements. The valve is controlled so as not to exceed the maximum discharge temperature.

D. Unoccupied time period: (cooling)
When the unoccupied period is reached, the user-defined occupied cooling set point is reset upward to a user-defined unoccupied cooling set point. If the primary air source is operating, the primary air damper will throttle in the same manner (as per A) during the unoccupied period, using the unoccupied cooling set point. If the primary air source was not previously operating, the control will initiate the fan start-up sequence and enable the fan before modulating the primary air damper. If the primary air source is not operating, then the fan will remain off.

E. Unoccupied time period: (auxiliary hot water heating)
When the unoccupied period is reached, the user-defined occupied heating set point is reset downward to a user-defined unoccupied heating set point. If the primary air source is not operating and the zone's temperature is below the unoccupied heating set point, the Unoccupied Heating mode is in effect. The primary air damper will fully close and the terminal fan will start. The hot water valve will modulate as required to supplement the plenum air heat. When the zone's temperature rises above the unoccupied heating set point, the valve will modulate closed and the fan will stop after the user-specified fan delay has expired. The primary air damper will then be returned to a 50% open position to allow the primary air source to properly start.

F. Unoccupied time period: (heating)
When the unoccupied period is reached, the user-defined occupied heating set point is reset downward to a user-defined unoccupied heating set point. If the primary air source is operating, the primary air damper will operate in the same manner (as per C) during the unoccupied period, using the unoccupied heating set point. The hot water valve will modulate as required to supplement the temperature of the mixture of induced plenum air and primary air. If the primary air source was not previously operating, the

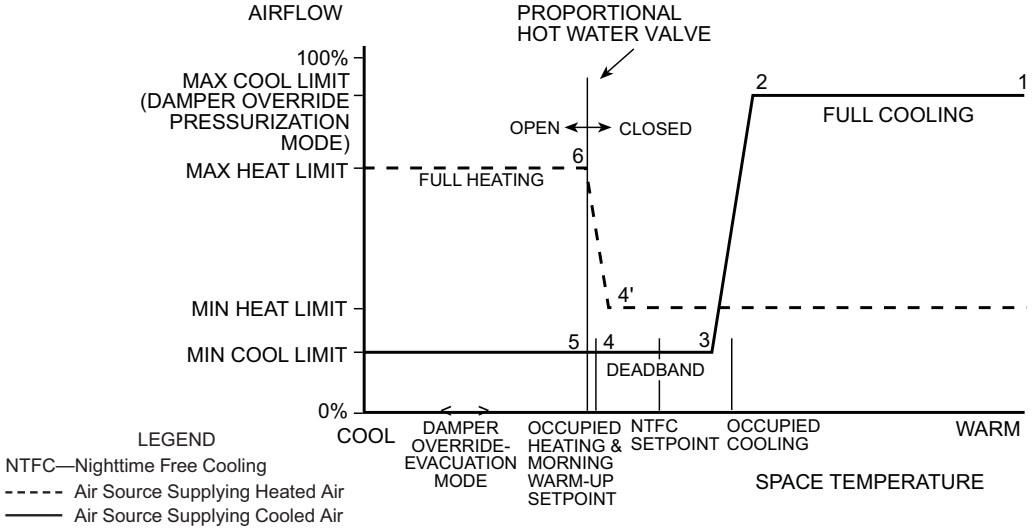

Figure 2 - Sequence of Operation for Series Fan Powered Air Terminal With Proportional Hot Water Heat

JOB NAME	JOB NUMBER	LOCATION	PAGE NUMBER	DRAWING NUMBER
BUYER	BUYER #	SHEET	2 OF 4	45J/K/Q-B-4484

control will initiate the fan start-up sequence and enable the fan before modulating the primary air damper. If the primary air source is not operating and the zone temperature is above the unoccupied heating set point, then the fan will remain off.

G. Morning warm-up: Units configured to provide variable volume heating
Upon receiving a morning warm-up signal generated by the air source equipped with BACnet controls, the control will initiate the fan start-up sequence and enable the fan. After the fan is operating, the damper will go to the maximum heating airflow set point if the zone temperature is below the occupied heating set point at 6. The hot water valve will modulate as required to supplement the temperature of the air and controlled so as not exceed the maximum discharge temperature. As the zone temperature rises above the occupied heating set point, the hot water valve will modulate close and the primary airflow will be reduced to the minimum heating airflow set point at 4'.

H. Demand controlled ventilation (option):
This mode is initiated when the zone is occupied and the air source is not heating. It occurs when the BACnet control receives a cooling signal from the air source equipped with BACnet controls, or when a primary air temperature sensor is installed to detect the air source operation is cooling. The control will monitor a CO_2 sensor (optional) and determine if ventilation is adequate. The zone CO_2 level is compared to the ventilation set point. If the CO_2 level is above the set point (insufficient ventilation), the airflow set point is increased appropriately to maintain proper ventilation. Should the zone's temperature fall below the heating set point, the control will suspend ventilation override until the zone's temperature recovers. If after supplying plenum heat for the user-specified heat delay, the heat was insufficient to raise the zone's temperature, then heating will be enabled and will operate as per B.

I. Humidity control (option):
This mode is initiated when the zone is occupied and the primary air source is cooling. It occurs when the BACnet control receives a cooling signal from the air source equipped with BACnet controls, or when a primary air temperature sensor is installed to detect the air source operation is cooling. The control will monitor a relative humidity (RH) sensor (optional) and determine if the zone's RH is above the humidity set point. If the RH level is above the RH set point, the airflow control point is increased to displace the humid air in the space with air from the primary air source (which has a lower dew point). To ensure non-simultaneous operation of both heating and cooling, should the increased airflow cause the zone's temperature to fall below the heating set point, the control will first suspend the airflow override and reduce the airflow to the minimum cooling set point. This will cause the fan to induce plenum air heat to warm the zone. If after supplying plenum heat for the user-specified heat delay the heat was insufficient to raise the zone's temperature, then heating will be enabled and will operate as per B. The airflow override will resume when the zone's temperature recovers and be disabled once the zone's RH level falls below the zone's RH set point.

J. Damper override:
The damper override function is energized through the use of a field-supplied smoke control panel connected to the air source equipped with BACnet controls. The smoke control panel and installation must be in accordance with UL864 and local codes. The damper override function overrides the airflow setting used by the logic. It will cause the terminal to operate the fan and provide the configured maximum cooling airflow when the air source is in the Pressurization mode, and to disable the fan and fully close the primary air damper when the air source is in the Evacuation mode.

K. Nighttime free cooling:
The logic calculates a nighttime free cooling (NTFC) temperature set point halfway between the occupied heating and occupied cooling temperature set points. Upon receiving a NTFC signal generated by the air source equipped with BACnet controls (or a primary air temperature sensor is installed to detect the air source is operating in the NTFC mode), the control will initiate the fan start-up sequence. Once the fan is operating, the primary air damper will modulate and throttle between the maximum and minimum cooling airflow set points to maintain the zone's NTFC temperature set point.

L. Primary air source shuts off:
1. The fan will be disabled unless the zone temperature falls below the heating set point (refer to E).
2. The damper will fully close and the control will recalibrate the airflow transducer.
3. If the primary air source remains off (no primary air), the damper will be repositioned to 50% open to allow the air source to restart.

JOB NAME	JOB NUMBER	LOCATION	PAGE NUMBER	DRAWING NUMBER
BUYER	BUYER #	SHEET	3 OF 4	45J/K/Q-D-4484

CODE	Carrier A United Technologies Company	THIS DOCUMENT IS THE PROPERTY OF CARRIER CORPORATION AND IS DELIVERED UPON THE EXPRESS CONDITION THAT THE CONTENTS WILL NOT BE DISCLOSED OR USED WITHOUT CARRIER CORPORATION'S WRITTEN CONSENT	SUBMISSION OF THESE DRAWINGS OR DOCUMENTS DOES NOT CONSTITUTE PART PERFORMANCE OR ACCEPTANCE OF CONTRACT	CONSTANT VOLUME FAN	45
CATALOG #					JD,KD,QD

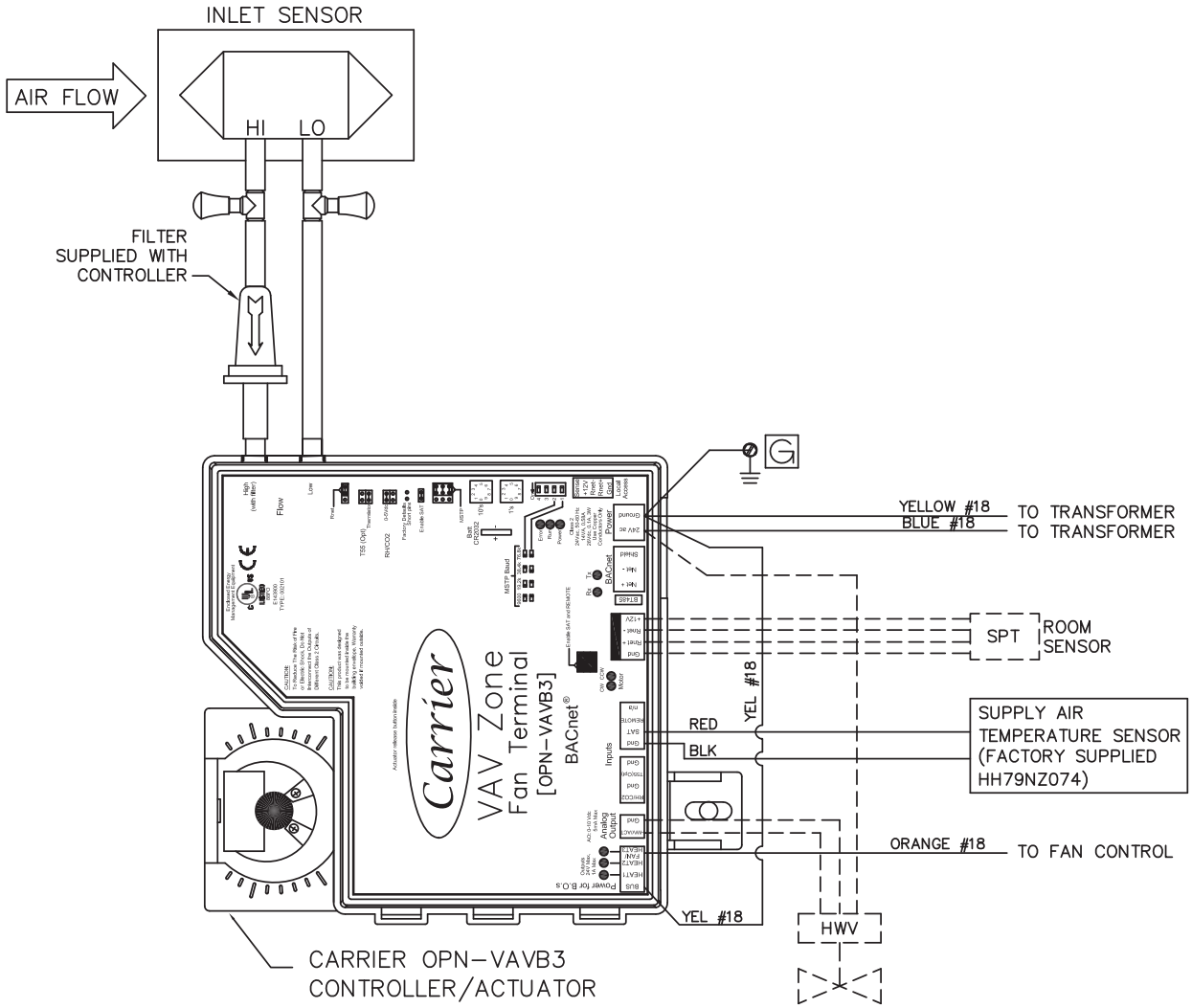

Notes:

1. For 45J/K/Q units the Actuator is configured CW to close.

2. CAUTION:
   Electric shock may result. Disconnect unit prior to servicing unit.

3. These controls have been wired to comply with UL-1995.

PRODUCT INFORMATION IS SUBJECT TO CHANGE WITHOUT NOTICE.

JOB NAME	JOB NUMBER	LOCATION	PAGE NUMBER	DRAWING NUMBER
BUYER	BUYER #	SHEET	4 OF 4	45J/K/Q-D-4484

CODE CATALOG #	Carrier A United Technologies Company	THIS DOCUMENT IS THE PROPERTY OF CARRIER CORPORATION AND IS DELIVERED UPON THE EXPRESS CONDITION THAT THE CONTENTS WILL NOT BE DISCLOSED OR USED WITHOUT CARRIER CORPORATION'S WRITTEN CONSENT.	SUBMISSION OF THESE DRAWINGS OR DOCUMENTS DOES NOT CONSTITUTE PART PERFORMANCE OR ACCEPTANCE OF CONTRACT.	CONSTANT VOLUME FAN	45 JD,KD, QD

BACnet CONSTANT VOLUME FAN—WITH PROPORTIONAL SOLID-STATE RELAY (SSR) ELECTRIC HEAT

CARRIER CONTROL PACKAGE NO. 4494

Application:

Fan powered constant volume terminals are designed to provide heating and cooling for perimeter zones. These terminals are also used in interior zones, where a constant volume of air (consisting of a combination of primary air mixed with recirculated air) provides the required air movement. A typical application is shown in Fig. 1. Design, load requirements, downstream (external) static pressure, fan performance and sound level acceptability govern terminal selection and sizing. The terminal fan performance is selected to provide sufficient pressure to overcome the coil pressure drop and external static pressure, permitting the use of smaller, more energy efficient primary air fan systems. (It is important that the correct fan and fan speed be selected to ensure that sufficient airflow is available for the electric heat coil.) The controls provide variable air volume (VAV) control of the primary air for cooling and operate a proportional electric heating coil to supplement fan-induced plenum heat during heating. As the primary airflow is reduced, the fan induces air from the plenum to provide a constant volume of air to the zone. A wall-mounted space temperature (SPT) sensor located in each zone will sense load requirements and activate the control sequence to accommodate cooling or heating. The control provides a fan start-up sequence to ensure proper rotation of the terminal's fan. Whenever the primary air source begins operation, the control will initiate the fan start-up sequence. Each control will provide a delay that is dependent on the control's address, before initiating the sequence. The delay prevents multiple terminals from performing the sequence simultaneously. The sequence will close the primary air damper fully to stop the primary airflow and allow the fan wheel to stop rotating, then will energize the terminal fan. The damper will then modulate to provide the primary airflow as required by the specific sequence of operation. This control package provides the following sequences of operations:

A. Cooling:

Refer to numbers on flow diagram. See Fig. 2.

1. Between 1 and 2 maximum primary airflow is established by the user-defined maximum cooling airflow set point until the zone comes under control at 2.
2. Beginning at 2, the primary airflow is regulated over a throttling range by the damper until the minimum cooling airflow set point is reached at 3. The minimum cooling airflow set point can be set to zero by the user. In this case, the damper will fully close if the zone temperature continues to fall. As the primary airflow is reduced, the fan induces ceiling plenum air to maintain a constant air volume to the zone.
3. Between 3 and 4, should the zone temperature continue to fall, the damper will hold the user-defined minimum cooling airflow set point.

B. Auxiliary electric heating when the primary air source is cooling:

Refer to numbers on flow diagram. See Fig. 2.

The installer is responsible for proper selection of the fan speed to provide sufficient airflow through the heating coil.

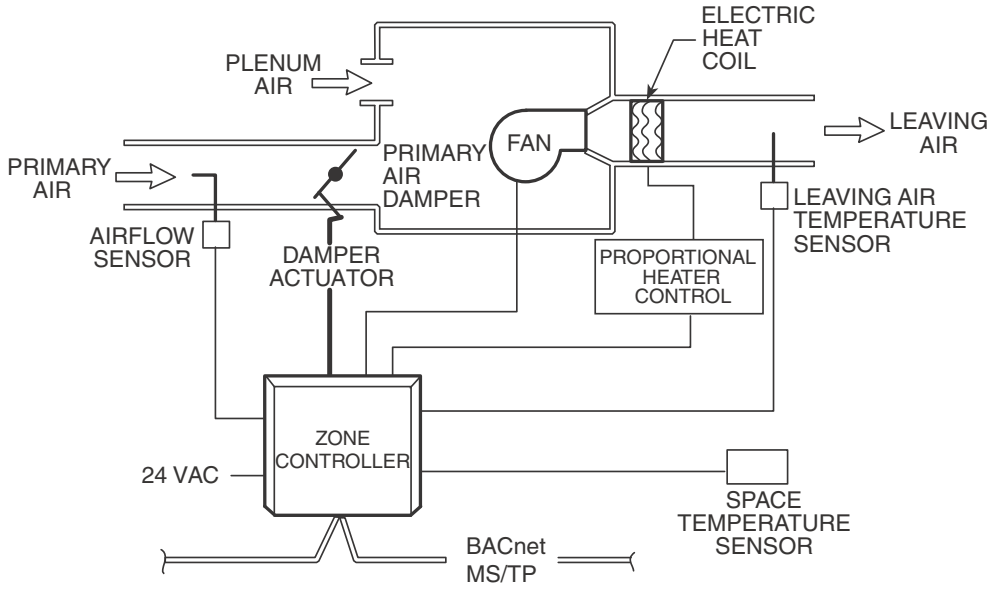

Figure 1 — Series Fan Powered Air Terminal with Proportional Electric Heat

PRODUCT INFORMATION IS SUBJECT TO CHANGE WITHOUT NOTICE. 06/15/2010

JOB NAME	JOB NUMBER	LOCATION	PAGE NUMBER	DRAWING NUMBER
BUYER	BUYER #	SHEET	1 OF 4	45J/K/Q-D-4494

CODE CATALOG #	Carrier A United Technologies Company	THIS DOCUMENT IS THE PROPERTY OF CARRIER CORPORATION AND IS DELIVERED UPON THE EXPRESS CONDITION THAT THE CONTENTS WILL NOT BE DISCLOSED OR USED WITHOUT CARRIER CORPORATION'S WRITTEN CONSENT.	SUBMISSION OF THESE DRAWINGS OR DOCUMENTS DOES NOT CONSTITUTE PART PERFORMANCE OR ACCEPTANCE OF CONTRACT.	CONSTANT VOLUME FAN	45 JD,KD, QD

1. Should the zone temperature fall below the occupied heating set point, the Occupied Heating mode is in effect at 4.
2. At 5, the electric heater output increases as required to provide heating and satisfy the load requirements. The heater is controlled so as not to exceed the maximum discharge temperature limit. The primary airflow is maintain at the user-defined minimum cooling airflow set point.
3. When the zone temperature rises above the occupied heating set point, the heater output is reduced to zero and the Ventilation mode is activated at 4.

C. Heating when the primary air source is providing heated air:

Refer to numbers on flow diagram. See Fig. 2.

1. Upon receiving a heating signal generated by the air source equipped with BACnet controls (or a primary air temperature sensor is installed to detect that the air source is heating), should the zone temperature fall below the occupied heating set point, the Heating mode is in effect at 4'.
2. The primary air damper is throttled between the user-defined minimum heating airflow set point at 4' and the user-defined maximum heating airflow set point at 6. The proportional electric heat modulates as required to supplement the temperature of the mixture of induced plenum air and heated primary air. The heater is controlled so as not to exceed the maximum discharge temperature.
3. The control may be configured to provide minimum primary airflow during heating. In that case the primary air damper will maintain the minimum heating airflow set point at 4' to provide ventilation air to the zone. The proportional electric heat will modulate as required to condition the discharge air to meet the zone's heating requirements. The heater is controlled so as not to exceed the maximum discharge temperature.

D. Unoccupied time period (cooling):

When the unoccupied period is reached, the user-defined occupied cooling set point is reset upward to a user-defined unoccupied cooling set point. If the primary air source is operating, the primary air damper will throttle in the same manner (as per A) during the unoccupied period, using the unoccupied cooling set point. If the primary air source was not previously operating, the control will initiate the fan start-up sequence and enable the fan before modulating the primary air damper. If the primary air source is not operating, then the fan will remain off.

E. Unoccupied time period (auxiliary electric heating):

When the unoccupied period is reached, the user-defined occupied heating set point is reset downward to a user-defined unoccupied heating set point. If the primary air source is not operating and the zone's temperature is below the unoccupied heating set point, the Unoccupied Heating mode is in effect. The primary air damper will fully close and the terminal fan will start. The proportional electric heat will modulate as required to supplement the plenum air heat. When the zone's temperature rises above the unoccupied heating set point, the heater output will be reduced to zero and the fan will stop after the user-specified fan delay has expired. The primary air damper will then be returned to at least a 50% open position to allow the primary air source to properly start.

F. Unoccupied time period (heating):

When the unoccupied period is reached, the user-defined occupied heating set point is reset downward to a user-defined unoccupied heating set point. If the primary air source is operating, the primary air damper will operate in the same manner (as per C) during the unoccupied period, using the unoccupied heating set point. The hot water valve will modulate as required to supplement the temperature of the mixture of induced plenum air and primary air. If the primary air source was not

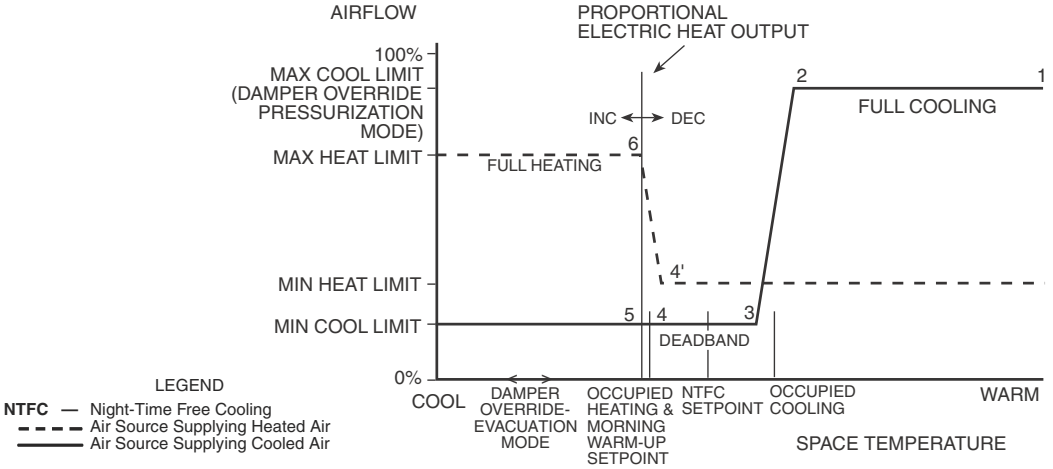

Figure 2 — Sequence of Operation for Series Fan Powered Air Terminal with Proportional Electric Heat

PRODUCT INFORMATION IS SUBJECT TO CHANGE WITHOUT NOTICE. 06/15/2010

JOB NAME	JOB NUMBER	LOCATION	PAGE NUMBER	DRAWING NUMBER
BUYER	BUYER #	SHEET	2 OF 4	45J/K/Q-D-4494

previously operating, the control will initiate the fan start-up sequence and enable the fan before modulating the primary air damper. If the primary air source is not operating and the zone temperature is above the unoccupied heating set point, then the fan will remain off.

G. Morning warm-up (units configured to provide variable volume heating):

Upon receiving a morning warm-up signal generated by the air source equipped with BACnet controls, the control will initiate the fan start-up sequence and enable the fan. After the fan is operating, the damper will go to the maximum heating airflow set point if the zone temperature is below the occupied heating set point at 6. The proportional electric heat will modulate as required to supplement the temperature of the air and controlled so as not exceed the maximum discharge temperature. As the zone temperature rises above the occupied heating set point, the heater output will be reduced to zero and the primary airflow will be reduced to the minimum heating airflow set point at 4'.

H. Demand controlled ventilation (option):

This mode is initiated when the zone is occupied and the air source is not heating. It occurs when the BACnet control receives a cooling signal from the air source equipped with BACnet controls, or when a primary air temperature sensor is installed to detect the air source operation is cooling. The control will monitor a CO_2 sensor (optional) and determine if ventilation is adequate. The zone CO_2 level is compared to the ventilation set point. If the CO_2 level is above the set point (insufficient ventilation), the airflow set point is increased appropriately to maintain proper ventilation. Should the zone's temperature fall below the heating set point, the control will suspend ventilation override until the zone's temperature recovers. If after supplying plenum heat for the user-specified heat delay, the heat was insufficient to raise the zone's temperature, then heating will be enabled and will operate as per B.

I. Humidity control (option):

This mode is initiated when the zone is occupied and the primary air source is cooling. It occurs when the BACnet control receives a cooling signal from the air source equipped with BACnet controls, or when a primary air temperature sensor is installed to detect the air source operation is cooling. The control will monitor a relative humidity (RH) sensor (optional) and determine if the zone's RH is above the humidity set point. If the RH level is above the RH set point, the airflow control point is increased to displace the humid air in the space with air from the primary air source (which has a lower dew point).To ensure non-simultaneous operation of both heating and cooling, should the increased airflow cause the zone's temperature to fall below the heating set point, the control will first suspend the airflow override and reduce the airflow to the minimum cooling set point. This will cause the fan to induce plenum air heat to warm the zone. If after supplying plenum heat for the user-specified heat delay the heat was insufficient to raise the zone's temperature, then heating will be enabled and will operate as per B.The airflow override will resume when the zone's temperature recovers and be disabled once the zone's RH level falls below the zone's RH set point.

J. Damper override:

The damper override function is energized through the use of a field-supplied smoke control panel connected to the air source equipped with BACnet controls. The smoke control panel and installation must be in accordance with UL864 and local codes. The damper override function overrides the airflow setting used by the logic. It will cause the terminal to operate the fan and provide the configured maximum cooling airflow when the air source is in the Pressurization mode, and to disable the fan and fully close the primary air damper when the air source is in the Evacuation mode.

K. Nighttime free cooling:

The logic calculates a nighttime free cooling (NTFC) temperature set point halfway between the occupied heating and occupied cooling temperature set points. Upon receiving a NTFC signal generated by the air source equipped with BACnet controls (or a primary air temperature sensor is installed to detect the air source is operating in the NTFC mode), the control will initiate the fan start-up sequence. Once the fan is operating, the primary air damper will modulate and throttle between the maximum and minimum cooling airflow set points to maintain the zone's NTFC temperature set point.

L. Primary air source shuts off:

1. The fan will be disabled unless the zone temperature falls below the heating set point (refer to E).
2. The damper will fully close and the control will recalibrate the airflow transducer.
3. If the primary air source remains off (no primary air), the damper will be repositioned to 50% open to allow the air source to restart.

CODE CATALOG #	Carrier A United Technologies Company	THIS DOCUMENT IS THE PROPERTY OF CARRIER CORPORATION AND IS DELIVERED UPON THE EXPRESS CONDITION THAT THE CONTENTS WILL NOT BE DISCLOSED OR USED WITHOUT CARRIER CORPORATION'S WRITTEN CONSENT.	SUBMISSION OF THESE DRAWINGS OR DOCUMENTS DOES NOT CONSTITUTE PART PERFORMANCE OR ACCEPTANCE OF CONTRACT.	CONSTANT VOLUME FAN	45 JD,KD, QD

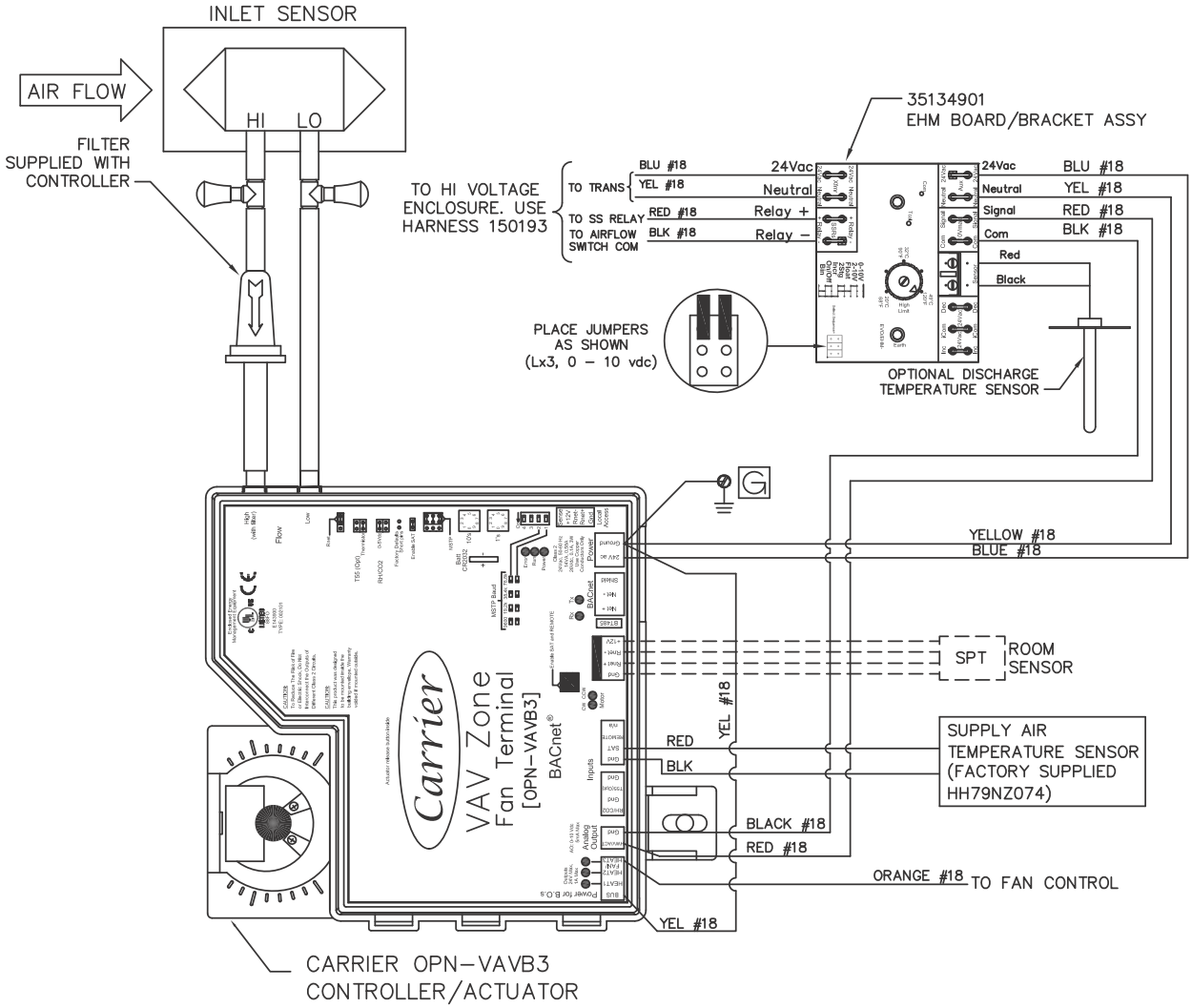

LEGEND

CCW	—	Counterclockwise
COM	—	Common
CW	—	Clockwise
DMPPOS	—	Damper Position
GND	—	Ground
PAT	—	Primary Air Temperature Sensor
SAT	—	Supply Air Temperature Sensor
SPT	—	Space Temperature Sensor
– – – –		Field Wiring
———		Factory Wiring

NOTES:

1. For 45J/K units, the actuator is configured CW to close. For 45Q units, the configuration is CCW to close.
2. CAUTION: Electric shock may result. Disconnect prior to servicing unit.
3. These controls have been wired to comply with UL-1995.

PRODUCT INFORMATION IS SUBJECT TO CHANGE WITHOUT NOTICE. 06/15/2010

JOB NAME	JOB NUMBER	LOCATION	PAGE NUMBER	DRAWING NUMBER
BUYER	BUYER #	SHEET	4 OF 4	45J/K/Q-D-4494

CODE	Carrier A United Technologies Company	THIS DOCUMENT IS THE PROPERTY OF CARRIER CORPORATION AND IS DELIVERED UPON THE EXPRESS CONDITION THAT THE CONTENTS WILL NOT BE DISCLOSED OR USED WITHOUT CARRIER CORPORATION'S WRITTEN CONSENT	SUBMISSION OF THESE DRAWINGS OR DOCUMENTS DOES NOT CONSTITUTE PART PERFORMANCE OR ACCEPTANCE OF CONTRACT	INTERMITTENT FAN	45 MD,ND,RD
CATALOG #					

BACnet INTERMITTENT FAN POWERED—WITHOUT HEAT CARRIER CONTROL PACKAGE NO. 4780

Application:

Intermittent fan powered terminals are designed to provide heating and cooling for perimeter zones. These terminals are also used in interior zones, where a combination of primary air mixed with recirculated air provides increased air movement and improved ventilation. A typical application is shown in Fig. 1. Design, load requirements, downstream (external) static pressure, fan performance and sound level acceptability govern terminal selection and sizing. The controls provide variable air volume (VAV) control of the primary air during cooling and heating. When the primary air source is cooling, should the zone require heat, the fan operates to draw in air from the ceiling plenum to provide heat to the zone (the fan set point is set to a CFM value slightly above the minimum cooling CFM set point.) These terminals require low inlet static pressure, permitting the use of smaller, more energy efficient primary air fan systems. A wall-mounted space temperature (SPT) sensor located in each zone will sense load requirements and activate the control sequence to accommodate cooling or heating. The control operates the fan during cooling when the zone's cooling load falls below a user-adjustable minimum airflow set point. This feature prevents cold air 'dumping' from the diffusers, while providing improved ventilation at a lower minimum airflow. This control package provides the following sequences of operations:

A. Cooling: (refer to numbers on flow diagram). See Fig. 2.
   1. 1-2 indicates that maximum primary airflow is established by the user-defined maximum cooling airflow set point until the zone comes under control at 2. The fan is disabled.
   2. Beginning at 2, the primary airflow is regulated over a throttling range by the damper until the minimum cooling airflow set point is reached at 3. (It must be noted that the minimum cooling airflow set point could be set to zero by the user. In this case, the damper will fully close if the zone temperature continues to fall.) As the primary airflow is reduced, the fan will operate to increase air circulation and improve ventilation when the primary airflow falls below the user-defined airflow set point.
   3. 3-4 indicates that, should the zone temperature continue to fall, the damper will hold the user-defined minimum cooling airflow set point.

B. Heating: (when the primary air source is providing heated air, refer to numbers on flow diagram). See Fig. 2.
   1. Upon receiving a heating signal generated by the air source equipped with BACnet controls (or a primary air temperature sensor is installed to detect that the air source is heating), should the zone temperature fall below the occupied heating set point, the Heating mode is in effect at 4'.
   2. The damper is throttled between the user-defined minimum heating airflow set point at 4' and the user-defined maximum heating airflow set point at 6. The fan remains off during this cycle.
   3. The control may be configured to provide constant volume heating. In that case the damper will maintain the minimum heating airflow set point at 4' to supply a constant volume of heated air to the zone.

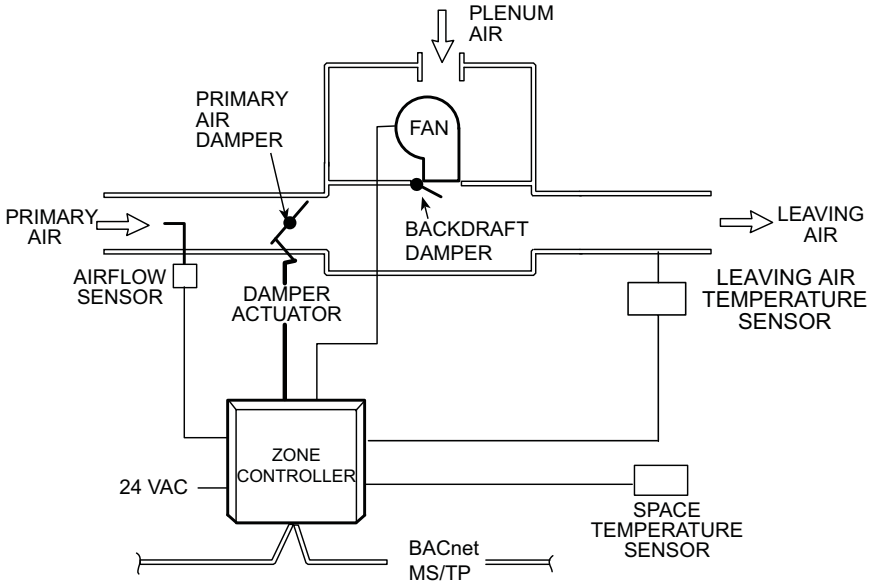

Figure 1 - Intermittent Fan Powered Air Terminal—Without Heat

PRODUCT INFORMATION IS SUBJECT TO CHANGE WITHOUT NOTICE. 06/15/2010

JOB NAME	JOB NUMBER	LOCATION	PAGE NUMBER	DRAWING NUMBER
BUYER	BUYER #	SHEET	1 OF 4	45M/N/R-D-4780

C. Morning warm-up: (configured to provide variable volume heating)
Upon receiving a morning warm-up signal generated by the air source equipped with BACnet controls, the primary air damper will go to the maximum heating airflow set point if the zone temperature is below the occupied heating set point at 6. This allows the warm primary air to be delivered to the zone. As the zone temperature rises above the occupied heating set point, the primary airflow will be reduced to the minimum heating airflow set point at 4'. The terminal fan will remain off.

D. Unoccupied time period: (cooling)
When the unoccupied period is reached, the user-defined occupied cooling set point is reset upward to a user-defined unoccupied cooling set point. If the primary air source is operating, the primary air damper will throttle in the same manner (as per A) during the unoccupied period, using the unoccupied cooling set point.

E. Unoccupied time period: (heating)
When the unoccupied period is reached, the user-defined occupied heating set point is reset downward to a user-defined unoccupied heating set point. If the primary air source is operating, the primary air damper will operate in the same manner (as per B) during the unoccupied period, using the unoccupied heating set point.

F. Demand controlled ventilation (option):
This mode is initiated when the zone is occupied and the air source is not heating. It occurs when the BACnet control receives a cooling signal from the air source equipped with BACnet controls, or when a primary air temperature sensor is installed to detect the air source operation is cooling. The control will monitor a CO_2 sensor (optional) and determine if ventilation is adequate. The zone CO_2 level is compared to the ventilation set point. If the CO_2 level is above the set point (insufficient ventilation), the airflow set point is increased appropriately to maintain proper ventilation. Should the zone's temperature fall below the heating set point, the control will suspend ventilation override and reduce the airflow to the minimum cooling airflow set point until the zone recovers.

G. Humidity control (option):
This mode is initiated when the zone is occupied and the primary air source is cooling. It occurs when the BACnet control receives a cooling signal from the air source equipped with BACnet controls, or when a primary air temperature sensor is installed to detect the air source operation is Cooling. The control will monitor a relative humidity (RH) sensor (optional) and determine if the zone's RH is above the humidity set point. If the RH level is above the RH set point, the airflow control point is increased to displace the humid air in the space with air from the primary air source (which has a lower dew point). To ensure non-simultaneous operation of both heating and cooling, should the increased airflow cause the zone's temperature to fall below the heating set point, the control will first suspend the airflow override and reduce the airflow to the minimum cooling set point. This will cause the fan to induce plenum air heat to warm the zone. If after supplying plenum heat for the user-specified heat delay, the heat was insufficient to raise the zone's temperature, then heating will be enabled and will operate as per B. The airflow override will resume when the zone's temperature recovers and be disabled once the zone's RH level falls below the zone's RH set point.

H. Damper override:
The damper override function is energized through the use of a field-supplied smoke control panel connected to the air source equipped with BACnet controls. The smoke control panel and installation must be in accordance with UL864 and local codes. The damper override function overrides the airflow setting used by the logic. It will cause the terminal to provide the configured maximum cooling airflow when the air source is in the Pressurization mode, and to disable the fan (if operating) and fully close the primary air damper when the air source is in the Evacuation mode.

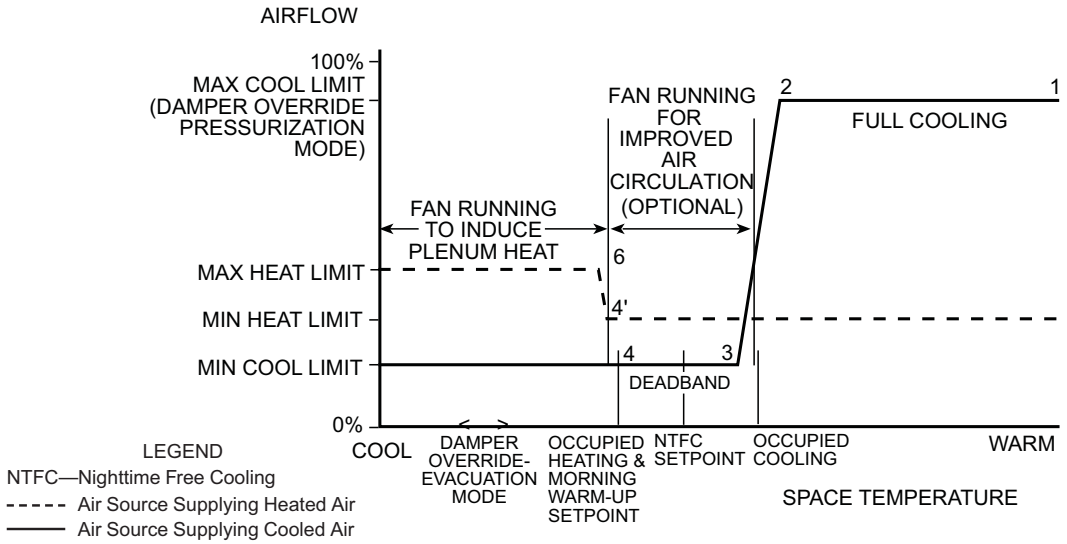

Figure 2 - Sequence of Operation for Intermittent Fan Powered Air Terminal—Without Heat

JOB NAME	JOB NUMBER	LOCATION	PAGE NUMBER	DRAWING NUMBER
BUYER	BUYER #	SHEET	2 OF 4	45M/N/R-D-4780

I. Nighttime free cooling:
The logic calculates a nighttime free cooling (NTFC) temperature set point halfway between the occupied heating and occupied cooling temperature set points. Upon receiving a NTFC signal generated by the air source equipped with BACnet controls (or a primary air temperature sensor is installed to detect the air source is operating in the NTFC mode), the primary air damper will modulate between the maximum and minimum cooling airflow set points to maintain the zone's NTFC temperature set point. The terminal fan will remain off.

J. Primary air source shuts off:
1. The damper will fully close and the control will recalibrate the airflow transducer.
2. If the primary air source remains off (no primary air), the damper will be repositioned to 50% open to allow the air source to restart.

JOB NAME	JOB NUMBER	LOCATION	PAGE NUMBER	DRAWING NUMBER
BUYER	BUYER #	SHEET	3 OF 4	45M/N/R-D-4780

CODE CATALOG #	Carrier A United Technologies Company	THIS DOCUMENT IS THE PROPERTY OF CARRIER CORPORATION AND IS DELIVERED UPON THE EXPRESS CONDITION THAT THE CONTENTS WILL NOT BE DISCLOSED OR USED WITHOUT CARRIER CORPORATION'S WRITTEN CONSENT	SUBMISSION OF THESE DRAWINGS OR DOCUMENTS DOES NOT CONSTITUTE PART PERFORMANCE OR ACCEPTANCE OF CONTRACT	INTERMITTENT FAN	45 MD,ND,RD

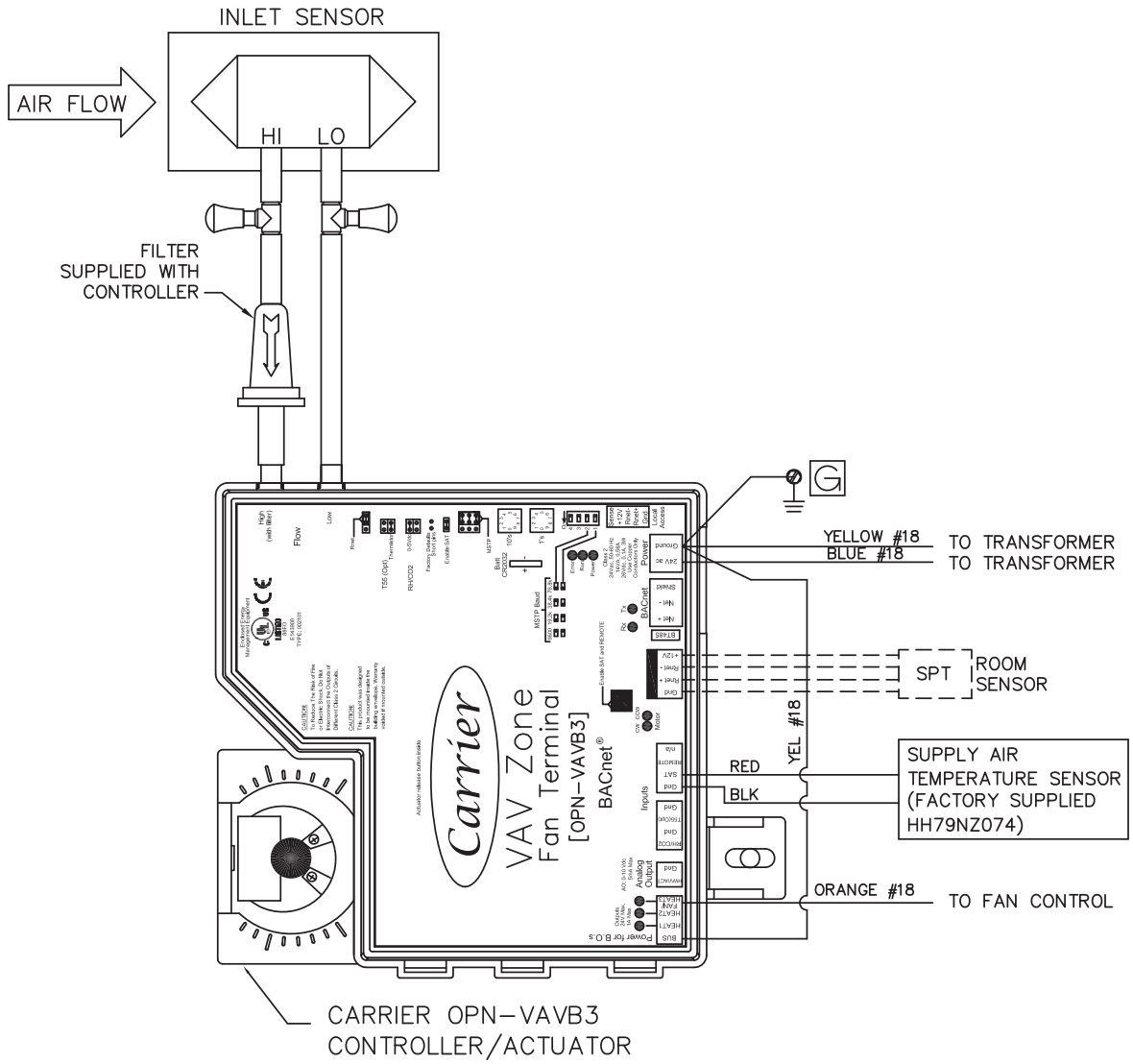

Notes:

1. For 45M/N/R units the Actuator is configured CW to close.

2. <u>CAUTION:</u>
   Electric shock may result. Disconnect unit prior to servicing unit.
3. These controls have been wired to comply with UL-1995.

PRODUCT INFORMATION IS SUBJECT TO CHANGE WITHOUT NOTICE.

JOB NAME	JOB NUMBER	LOCATION	PAGE NUMBER	DRAWING NUMBER
BUYER	BUYER #	SHEET	4 OF 4	45M/N/R-D-4780

CODE	Carrier A United Technologies Company	THIS DOCUMENT IS THE PROPERTY OF CARRIER CORPORATION AND IS DELIVERED UPON THE EXPRESS CONDITION THAT THE CONTENTS WILL NOT BE DISCLOSED OR USED WITHOUT CARRIER CORPORATION'S WRITTEN CONSENT	SUBMISSION OF THESE DRAWINGS OR DOCUMENTS DOES NOT CONSTITUTE PART PERFORMANCE OR ACCEPTANCE OF CONTRACT	INTERMITTENT FAN	45 MD,ND,RD
CATALOG #					

BACnet INTERMITTENT FAN POWERED — WITH UP TO 2 STAGES OF ELECTRIC HEAT CARRIER CONTROL PACKAGE NO. 4782

Application:

Intermittent fan powered terminals are designed to provide heating and cooling for perimeter zones. These terminals are also used in interior zones, where a combination of primary air mixed with recirculated air provides increased air movement and improved ventilation. A typical application is shown in Fig. 1. Design, load requirements, downstream (external) static pressure, fan performance and sound level acceptability govern terminal selection and sizing. The controls provide variable air volume (VAV) control of the primary air during cooling. If enabled, a control option can energize the fan during cooling when the zone's cooling load falls below a user-adjustable minimum airflow set point. This feature prevents cold air 'dumping' from the diffusers, while providing improved ventilation at a lower minimum cooling airflow set points. (The fan set point is set to a CFM value slightly above the minimum cooling CFM set point.) When the primary air source is cooling, should the zone require heat, the fan operates to draw in air from the ceiling plenum to provide heat to the zone. During heating, the fan operates to provide ceiling plenum heat, and in addition, electric heat stages operate as required to supplement this heat. These terminals require low inlet static pressure, permitting the use of smaller, more energy efficient primary air fan systems. A wall-mounted space temperature (SPT) sensor located in each zone will sense load requirements and activate the control sequence to accommodate cooling or heating. This control package provides the following sequences of operations:

A. Cooling: (refer to numbers on flow diagram). See Fig. 2.
   1. 1-2 indicates that maximum primary airflow is established by the user-defined maximum cooling airflow set point until the zone comes under control at 2. The fan is disabled.
   2. Beginning at 2, the primary airflow is regulated over a throttling range by the damper until the minimum cooling airflow set point is reached at 3. (It must be noted that the minimum cooling airflow set point could be set to zero by the user. In this case, the damper will fully close if the zone temperature continues to fall.) Optionally, as the primary airflow is reduced, the fan will operate to increase air circulation and improve ventilation when the primary airflow falls below the user-defined airflow set point.
   3. 3-4 indicates that, should the zone temperature continue to fall, the damper will hold the user-defined minimum cooling airflow set point.

B. Auxiliary electric heating: (when the primary air source is cooling, refer to numbers on flow diagram). See Fig. 2. The installer is responsible for proper temperature, no more than 120 F maximum discharge from the heating

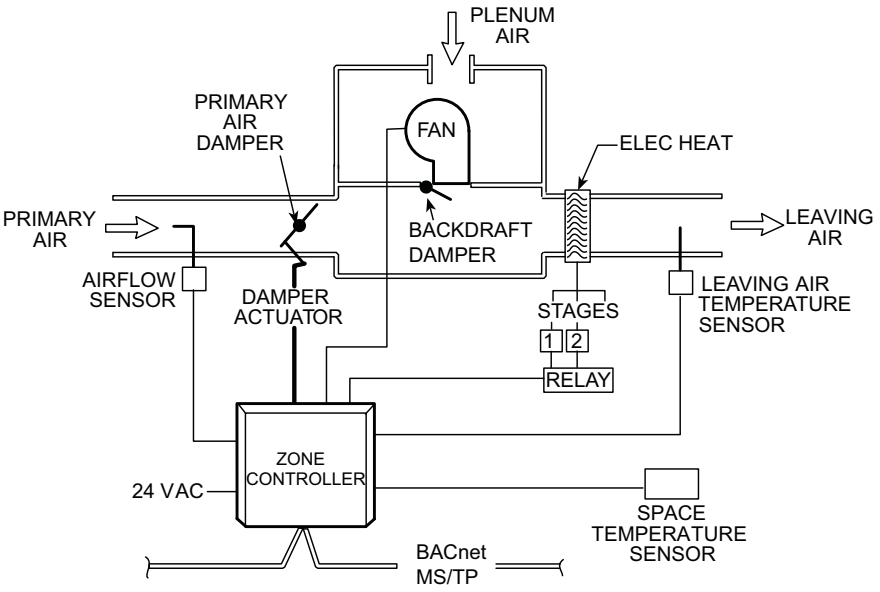

Figure 1 - Intermittent Fan Powered Air Terminal With Staged Electric Heat

PRODUCT INFORMATION IS SUBJECT TO CHANGE WITHOUT NOTICE. 06/15/2010

JOB NAME	JOB NUMBER	LOCATION	PAGE NUMBER	DRAWING NUMBER
BUYER	BUYER #	SHEET	1 OF 4	45M/N/R-D-4782

apparatus for safe and proper operation. Follow the manufacturer's recommendations for specific equipment.

1. Should the zone temperature fall below the occupied heating set point, the Occupied Heating mode is in effect at 4.
2. The fan is energized to induce heated plenum air to warm the zone.
3. After supplying plenum heat for the user-specified heat delay, the heat was insufficient to raise the zone's temperature, then at 5, up to 2 stages of electric heat (1h and 2h) are energized successively until all stages are activated as needed. The stages are controlled so as not to exceed the maximum discharge temperature limit. During the Heating mode, the primary airflow is maintain at the user-defined minimum cooling airflow set point.
4. When the zone temperature rises above the occupied heating set point, the heater stages are disabled. After an adjustable delay has expired, the fan is disabled unless required operation is ventilation and the Ventilation mode is reactivated at 4.

C. Heating: (when the primary air source is providing heated air, refer to numbers on flow diagram). See Fig. 2.
The installer is responsible for proper selection of the temperature no more than 120 F maximum discharge from the heating apparatus for safe and proper operation.

1. Upon receiving a heating signal generated by the air source equipped with BACnet controls (or a primary air temperature sensor is installed to detect that the air source is heating), should the zone temperature fall below the occupied heating set point, the Heating mode is in effect at 4'.
2. The damper will maintain the minimum heating airflow set point at 4'. The fan will be energized and the electric heater stages will operate as required to supplement the induced air heat from the ceiling plenum.
3. The control may be configured to provide variable volume heating. In that case the damper is throttled between the user-defined minimum heating airflow set point at 4' and the user-defined maximum heating airflow set point at 6. The fan will operate during this cycle. If VAV heating is enabled, it is important to limit the maximum heating set point so that the combined airflow of both the fan and the maximum heating set point do not exceed the maximum for the zone's diffusers.

D. Morning warm-up: (configured to provide constant volume heating)
Upon receiving a morning warm-up signal generated by the air source equipped with BACnet controls, the primary air damper will maintain the minimum heating airflow set point. The terminal fan will operate to provide plenum air to the space and the electric heater stages will operate to supplement the plenum heat as required. The stages are controlled so as not to exceed the maximum discharge temperature. The control may be configured to provide variable volume heating. In that case the damper is throttled between the user-defined minimum heating airflow set point at 4' and the user-defined maximum heating airflow set point at 6. The fan will operate during this cycle. If VAV heating is enabled, it is important to limit the maximum heating set point so that the combined airflow of both the fan and the maximum heating set point do not exceed the maximum for the zone's diffusers.

E. Unoccupied time period: (cooling)
When the unoccupied period is reached, the user-defined occupied cooling set point is reset upward to a user-defined unoccupied cooling set point. If the primary air source is operating, the primary air damper will throttle in the same manner (as per A) during the unoccupied period, using the unoccupied cooling set point.

F. Unoccupied time period: (auxiliary electric heating when air source is off)
When the unoccupied period is reached, the user-defined occupied heating set point is reset downward to

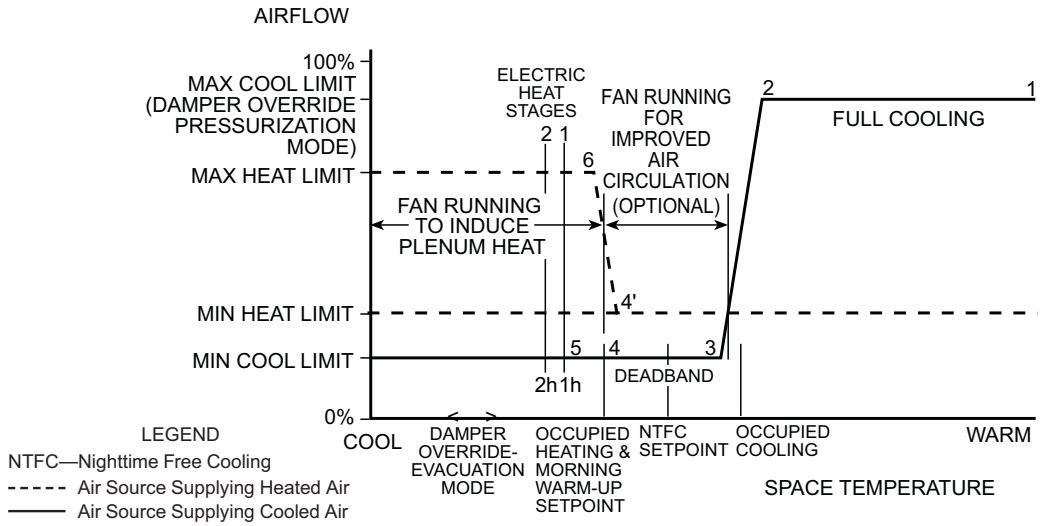

Figure 2 - Sequence of Operation for Intermittent Fan Powered Air Terminal With Staged Electric Heat

JOB NAME	JOB NUMBER	LOCATION	PAGE NUMBER	DRAWING NUMBER
BUYER	BUYER #	SHEET	2 OF 4	45M/N/R-D-4782

a user-defined unoccupied heating set point. If the zone's temperature falls below the unoccupied heating set point, the unoccupied Heating mode is in effect. The terminal fan will start and the primary air damper will fully close. The electric heat stages will operate to supplement the plenum air heat as required (the proper fan speed must be selected to provide at least 500 fpm through the heater). When the zone's temperature rises above the unoccupied heating set point, the electric heat stages are disabled and the fan will stop after the user-defined fan delay has expired. The primary air damper will then be returned to a 50% open position to allow the primary air source to properly start.

G. Unoccupied time period: (heating)
When the unoccupied period is reached, the user-defined occupied heating set point is reset downward to a user-defined unoccupied heating set point. The primary air damper will operate in the same manner (as per C) during the unoccupied period, using the unoccupied heating set point.

H. Demand controlled ventilation (option):
This mode is initiated when the zone is occupied and the air source is not heating. It occurs when the BACnet control receives a cooling signal from the air source equipped with BACnet controls, or when a primary air temperature sensor is installed to detect the air source operation is cooling. The control will monitor a CO_2 sensor (optional) and determine if ventilation is adequate. The zone CO_2 level is compared to the ventilation set point. If the CO_2 level is above the set point (insufficient ventilation), the airflow set point is increased appropriately to maintain proper ventilation. Should the zone's temperature fall below the heating set point, the control will suspend ventilation override until the zone's temperature recovers. If after supplying plenum heat for the user-specified heat delay, the heat was insufficient to raise the zone's temperature, then heating will be enabled and will operate as per B.

I. Humidity control (option):
This mode is initiated when the zone is occupied and the primary air source is cooling. It occurs when the BACnet control receives a cooling signal from the air source equipped with BACnet controls, or when a primary air temperature sensor is installed to detect the air source operation is Cooling. The control will monitor a relative humidity (RH) sensor (optional) and determine if the zone's RH is above the humidity set point. If the RH level is above the RH set point, the airflow control point is increased to displace the humid air in the space with air from the primary air source (which has a lower dew point). To ensure non-simultaneous operation of both heating and cooling, should the increased airflow cause the zone's temperature to fall below the heating set point, the control will first suspend the airflow override and reduce the airflow to the minimum cooling set point. The fan will operate to induce plenum air heat to warm the zone. If after supplying plenum heat for the user-specified heat delay, the heat was insufficient to raise the zone's temperature, then heating will be enabled and will operate as per B. The airflow override will resume when the zone's temperature recovers and be disabled once the zone's RH level falls below the zone's RH set point.

J. Damper override:
The damper override function is energized through the use of a field-supplied smoke control panel connected to the air source equipped with BACnet controls. The smoke control panel and installation must be in accordance with UL864 and local codes. The damper override function overrides the airflow setting used by the logic. It will cause the terminal to provide the configured maximum cooling airflow when the air source is in the Pressurization mode, and to disable the fan (if operating) and fully close the primary air damper when the air source is in the Evacuation mode.

K. Nighttime free cooling:
The logic calculates a nighttime free cooling (NTFC) temperature set point halfway between the occupied heating and occupied cooling temperature set points. Upon receiving a NTFC signal generated by the air source equipped with BACnet controls (or a primary air temperature sensor is installed to detect the air source is operating in the NTFC mode), the primary air damper will modulate between the maximum and minimum cooling airflow set points to maintain the zone's NTFC temperature set point. The terminal fan will remain off.

L. Primary air source shuts off:
1. The fan will be disabled unless the zone temperature falls below the heating set point (refer to C).
2. The damper will fully close and the control will recalibrate the airflow transducer.
3. If the primary air source remains off (no primary air), the damper will be repositioned to 50% open to allow the air source to restart.

JOB NAME	JOB NUMBER	LOCATION	PAGE NUMBER	DRAWING NUMBER
BUYER	BUYER #	SHEET	3 OF 4	45M/N/R-D-4782

CODE	Carrier A United Technologies Company	THIS DOCUMENT IS THE PROPERTY OF CARRIER CORPORATION AND IS DELIVERED UPON THE EXPRESS CONDITION THAT THE CONTENTS WILL NOT BE DISCLOSED OR USED WITHOUT CARRIER CORPORATION'S WRITTEN CONSENT	SUBMISSION OF THESE DRAWINGS OR DOCUMENTS DOES NOT CONSTITUTE PART PERFORMANCE OR ACCEPTANCE OF CONTRACT	INTERMITTENT FAN	45 MD,ND,RD
CATALOG #					

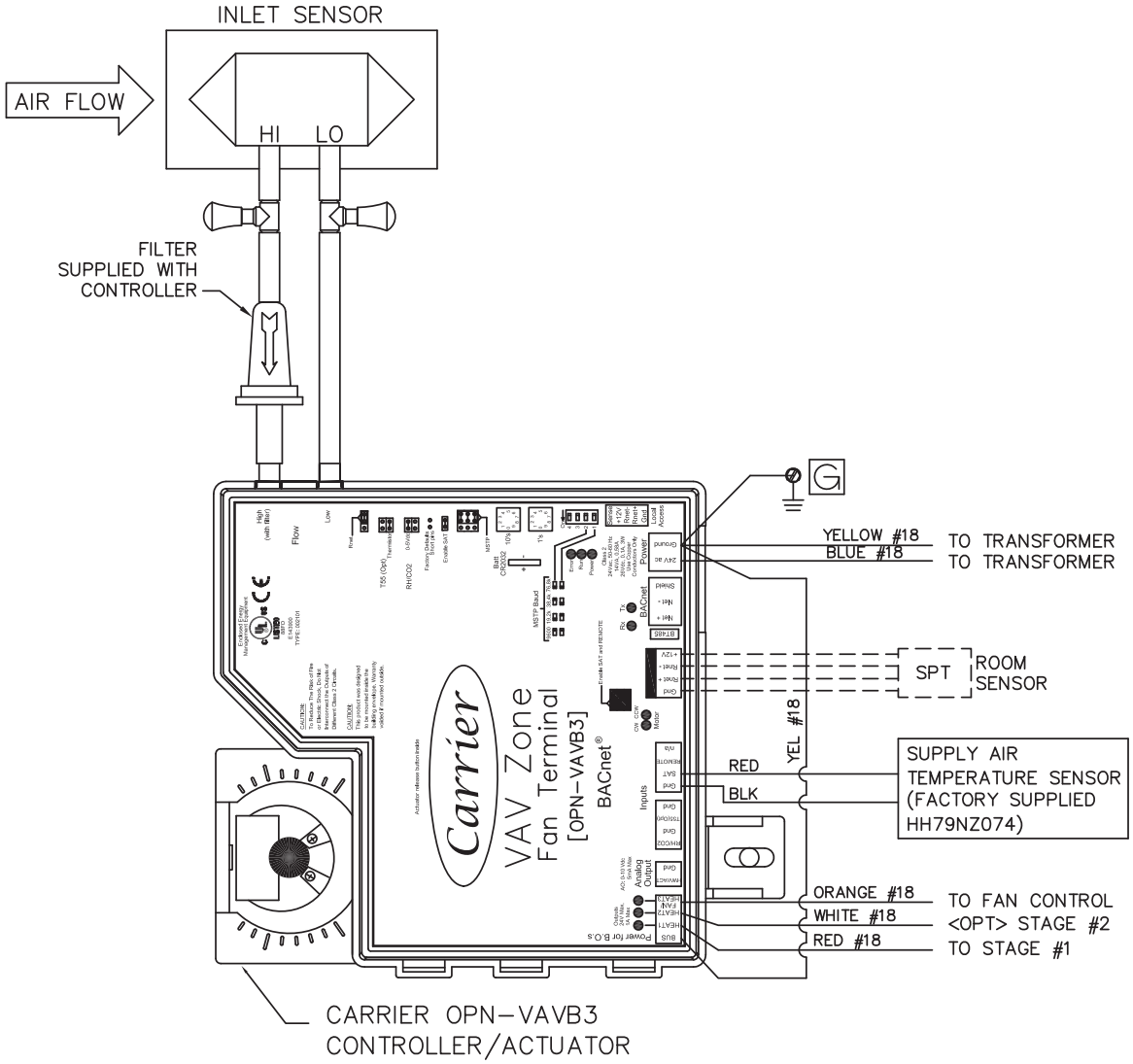

Notes:

1. For 45M/N/R units the Actuator is configured CW to close.

2. CAUTION:
   Electric shock may result. Disconnect unit prior to servicing unit.
3. These controls have been wired to comply with UL-1995.

PRODUCT INFORMATION IS SUBJECT TO CHANGE WITHOUT NOTICE.

JOB NAME	JOB NUMBER	LOCATION	PAGE NUMBER	DRAWING NUMBER
BUYER	BUYER #	SHEET	4 OF 4	45M/N/R-D-4782

CODE CATALOG #	Carrier A United Technologies Company	THIS DOCUMENT IS THE PROPERTY OF CARRIER CORPORATION AND IS DELIVERED UPON THE EXPRESS CONDITION THAT THE CONTENTS WILL NOT BE DISCLOSED OR USED WITHOUT CARRIER CORPORATION'S WRITTEN CONSENT	SUBMISSION OF THESE DRAWINGS OR DOCUMENTS DOES NOT CONSTITUTE PART PERFORMANCE OR ACCEPTANCE OF CONTRACT	INTERMITTENT FAN	45 MD,ND,RD

BACnet INTERMITTENT FAN POWERED — WITH ON/OFF HOT WATER HEAT CARRIER CONTROL PACKAGE NO. 4783

Application:

Intermittent fan powered terminals are designed to provide heating and cooling for perimeter zones. These terminals are also used in interior zones, where a combination of primary air mixed with recirculated air provides increased air movement and improved ventilation. A typical application is shown in Fig. 1. Design, load requirements, downstream (external) static pressure, fan performance and sound level acceptability govern terminal selection and sizing. The terminal fan performance is selected to provide sufficient pressure to overcome the coil pressure drop and external static pressure. (It is important that the correct fan and fan speed be selected to ensure that sufficient Btu's can be delivered to meet the heating and cooling load requirements.) The controls provide variable air volume (VAV) control of the primary air for cooling and operates a two-position heating valve connected to a heating coil to supplement fan induced plenum heat during heating. If enabled, a control option can energize the fan during cooling when the zone's cooling load falls below a user-adjustable minimum airflow set point. This feature prevents cold air 'dumping' from the diffusers, while providing improved ventilation at a lower minimum cooling airflow set points. (The fan set point is set to a CFM value slightly above the minimum cooling CFM set point.) When the primary air source is cooling, should the zone require heat, the fan operates to draw in air from the ceiling plenum to provide heat to the zone. The fan operates to provide ceiling plenum heat, and in addition, hot water heat operates as required to supplement this heat. A wall-mounted space temperature (SPT) sensor located in each zone will sense load requirements and activate the control sequence to accommodate cooling or heating. This control package provides the following sequences of operations:

A. Cooling: (refer to numbers on flow diagram). See Fig. 2.
   1. 1-2 indicates that maximum primary airflow is established by the user-defined maximum cooling airflow set point until the zone comes under control at 2. The fan is disabled.
   2. Beginning at 2, the primary airflow is regulated over a throttling range by the damper until the minimum cooling airflow set point is reached at 3. (It must be noted that the minimum cooling airflow set point could be set to zero by the user. In this case, the damper will fully close if the zone temperature continues to fall.) Optionally, as the primary airflow is reduced, the fan operates to increase air circulation and improve ventilation when the primary airflow falls below the user-defined airflow set point.
   3. 3-4 indicates that, should the zone temperature continue to fall, the damper will hold the user-defined minimum cooling airflow set point.

B. Auxiliary hot water heating: (when the primary air source is cooling, refer to numbers on flow diagram). See Fig. 2.
   1. Should the zone temperature fall below the occupied heating set point, the Occupied Heating mode is in effect at 4.
   2. The fan is energized to induce heated plenum air to warm the zone.

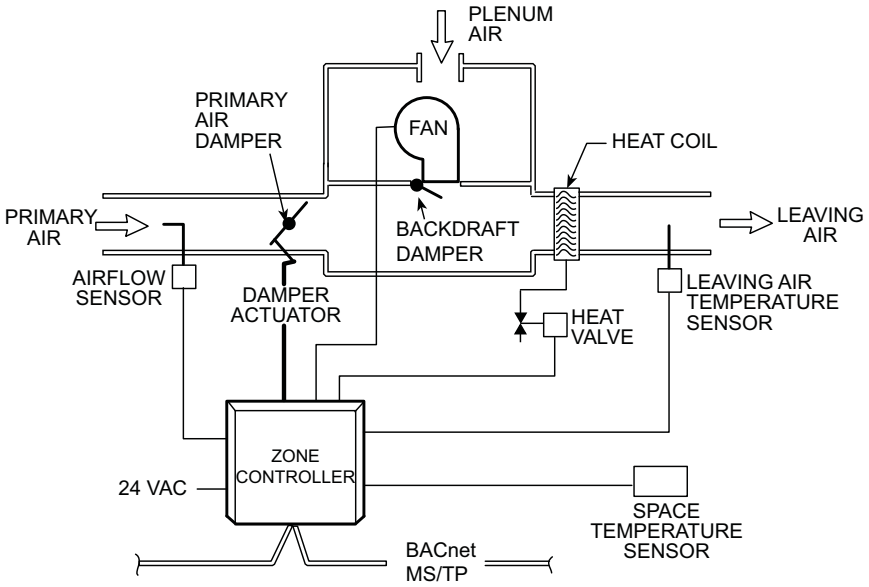

Figure 1 - Intermittent Fan Powered Air Terminal With Two-Position Hot Water Heat

3. After supplying plenum heat for the user-specified heat delay, the heat was insufficient to raise the zone's temperature, then at 5, the hot water valve will open. The valve is controlled so as not to exceed the maximum discharge temperature. During the Heating mode, the primary airflow is maintain at the user-defined minimum cooling airflow set point.
4. When the zone temperature rises above the occupied heating set point, the valve closes. After an adjustable delay has expired, the fan is disabled unless required to provide ventilation and the Ventilation mode is reactivated at 4.

C. Heating: (when the primary air source is providing heated air, refer to numbers on flow diagram). See Fig. 2.

1. Upon receiving a heating signal generated by the air source equipped with BACnet controls (or a primary air temperature sensor is installed to detect that the air source is heating), should the zone temperature fall below the occupied heating set point, the Heating mode is in effect at 4'.
2. The damper will maintain the minimum heating airflow set point at 4'. The fan will be energized and the water valve will open if required to supplement the induced air heat from the ceiling plenum.
3. The control may be configured to provide variable volume heating. In that case the damper is throttled between the user-defined minimum heating airflow set point at 4' and the user-defined maximum heating airflow set point at 6. The fan will operate during this cycle. If VAV heating is enabled, it is important to limit the maximum heating set point so that the combined airflow of both the fan and the maximum heating set point do not exceed the maximum for the zone's diffusers.

D. Morning warm-up: (configured to provide constant volume heating)
Upon receiving a morning warm-up signal generated by the air source equipped with BACnet controls, the primary air damper will maintain the minimum heating airflow set point. The terminal fan will operate to provide plenum air to the space and the water valve will operate to supplement the plenum heat as required. The valve is controlled so as not to exceed the maximum discharge temperature. The control may be configured to provide variable volume heating. In that case the damper is throttled between the user-defined minimum heating air flow set point at 4' and the user-defined maximum heating airflow set point at 6. The fan will operate during this cycle. If VAV heating is enabled, it is important to limit the maximum heating set point so that the combined airflow of both the fan and the maximum heating set point do not exceed the maximum for the zone's diffusers.

E. Unoccupied time period: (cooling)
When the unoccupied period is reached, the user-defined occupied cooling set point is reset upward to a user-defined unoccupied cooling set point. If the primary air source is operating, the primary air damper will throttle in the same manner (as per A) during the unoccupied period, using the unoccupied cooling set point.

F. Unoccupied time period: (auxiliary hydronic heating when air source is off)
When the unoccupied period is reached, the user-defined occupied heating set point is reset downward to a user-defined unoccupied heating set point. If the zone's temperature falls below the unoccupied heating set point, the Unoccupied Heating mode is in effect. The terminal fan will start and the primary air damper will fully close. The water valve will open to supplement the plenum air heat as required. When the zone's temperature rises above the

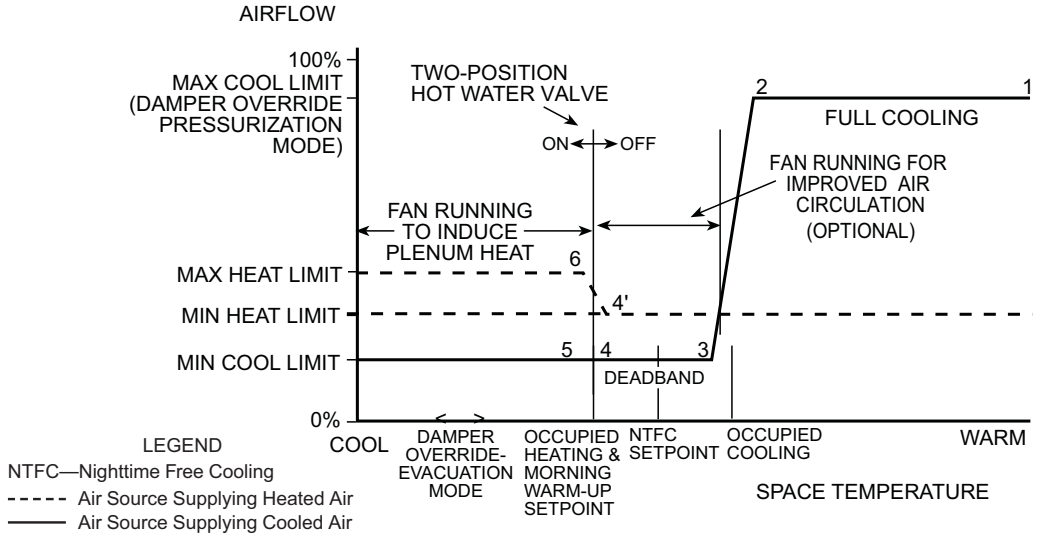

Figure 2 - Sequence of Operation for Intermittent Fan Powered Air Terminal With Two-Position Hot Water Heat

JOB NAME	JOB NUMBER	LOCATION	PAGE NUMBER	DRAWING NUMBER
BUYER	BUYER #	SHEET	2 OF 4	45M/N/R-D-4783

unoccupied heating set point, the water valve will close and the fan will stop after the user-defined fan delay has expired. The primary air damper will then be returned to a 50% open position to allow the primary air source to properly start.

G. Unoccupied time period: (heating)
When the unoccupied period is reached, the user-defined occupied heating set point is reset downward to a user-defined unoccupied heating set point. The primary air damper will operate in the same manner (as per C) during the unoccupied period, using the unoccupied heating set point.

H. Demand controlled ventilation (option):
This mode is initiated when the zone is occupied and the air source is not heating. It occurs when the BACnet control receives a cooling signal from the air source equipped with BACnet controls, or when a primary air temperature sensor is installed to detect the air source operation is cooling. The control will monitor a CO_2 sensor (optional) and determine if ventilation is adequate. The zone CO_2 level is compared to the ventilation set point. If the CO_2 level is above the set point (insufficient ventilation), the airflow set point is increased appropriately to maintain proper ventilation. Should the zone's temperature fall below the heating set point, the control will suspend ventilation override until the zone's temperature recovers. If after supplying plenum heat for the user-specified heat delay, the heat was insufficient to raise the zone's temperature, then heating will be enabled and will operate as per B.

I. Humidity control (option):
This mode is initiated when the zone is occupied and the primary air source is cooling. It occurs when the BACnet control receives a cooling signal from the air source equipped with BACnet controls, or when a primary air temperature sensor is installed to detect the air source operation is cooling. The control will monitor a relative humidity (RH) sensor (optional) and determine if the zone's RH is above the humidity set point. If the RH level is above the RH set point, the airflow control point is increased to displace the humid air in the space with air from the primary air source (which has a lower dew point). To ensure non-simultaneous operation of both heating and cooling, should the increased airflow cause the zone's temperature to fall below the heating set point, the control will first suspend the airflow override and reduce the airflow to the minimum cooling set point. The fan will operate to induce plenum air heat to warm the zone. If after supplying plenum heat for the user-specified heat delay, the heat was insufficient to raise the zone's temperature, then heating will be enabled and will operate as per B. The airflow override will resume when the zone's temperature recovers and be disabled once the zone's RH level falls below the zone's RH set point.

J. Damper override:
The damper override function is energized through the use of a field-supplied smoke control panel connected to the air source equipped with BACnet controls. The smoke control panel and installation must be in accordance with UL864 and local codes. The damper override function overrides the airflow setting used by the logic. It will cause the terminal to provide the configured maximum cooling airflow when the air source is in the Pressurization mode, and to disable the fan (if operating) and fully close the primary air damper when the air source is in the Evacuation mode.

K. Nighttime free cooling:
The logic calculates a nighttime free cooling (NTFC) temperature set point halfway between the occupied heating and occupied cooling temperature set points. Upon receiving a NTFC signal generated by the air source equipped with BACnet controls (or a primary air temperature sensor is installed to detect the air source is operating in the NTFC mode), the primary air damper will modulate between the maximum and minimum cooling airflow set points to maintain the zone's NTFC temperature set point. The terminal fan will remain off.

L. Primary air source shuts off:
1. The fan will be disabled unless the zone temperature falls below the heating set point (refer to C).
2. The damper will fully close and the control will recalibrate the airflow transducer.
3. If the primary air source remains off (no primary air), the damper will be repositioned to 50% open to allow the air source to restart.

JOB NAME	JOB NUMBER	LOCATION	PAGE NUMBER	DRAWING NUMBER
BUYER	BUYER #	SHEET	3 OF 4	45M/N/R-D-4783

CODE	Carrier A United Technologies Company	THIS DOCUMENT IS THE PROPERTY OF CARRIER CORPORATION AND IS DELIVERED UPON THE EXPRESS CONDITION THAT THE CONTENTS WILL NOT BE DISCLOSED OR USED WITHOUT CARRIER CORPORATION'S WRITTEN CONSENT	SUBMISSION OF THESE DRAWINGS OR DOCUMENTS DOES NOT CONSTITUTE PART PERFORMANCE OR ACCEPTANCE OF CONTRACT	INTERMITTENT FAN	45
CATALOG #					MD,ND,RD

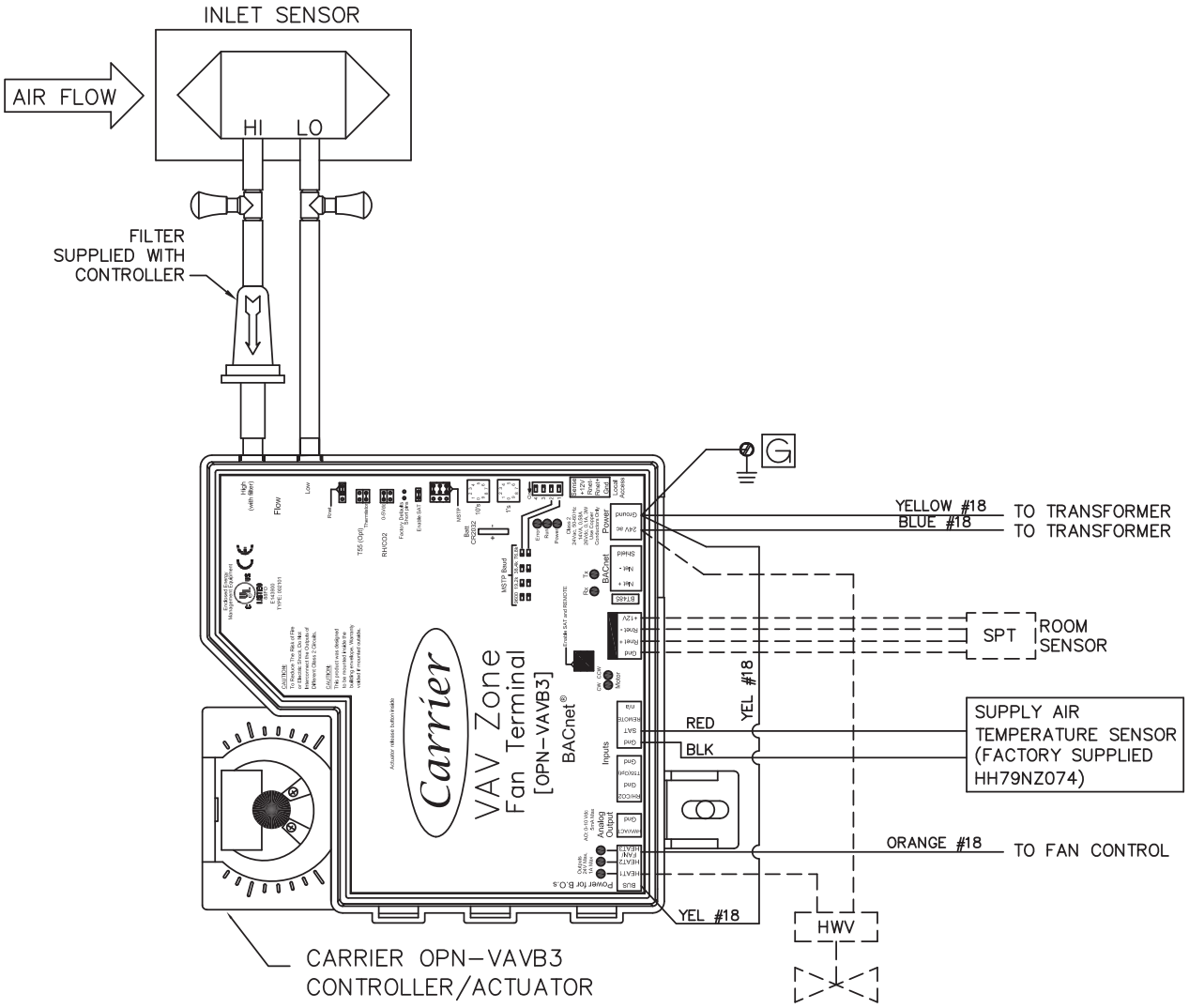

Notes:

1. For 45M/N/R units the Actuator is configured CW to close.

2. <u>CAUTION:</u>
   Electric shock may result. Disconnect unit prior to servicing unit.
3. These controls have been wired to comply with UL-1995.

PRODUCT INFORMATION IS SUBJECT TO CHANGE WITHOUT NOTICE.

JOB NAME	JOB NUMBER	LOCATION	PAGE NUMBER	DRAWING NUMBER
BUYER	BUYER #	SHEET	4 OF 4	45M/N/R-D-4783

CODE CATALOG #	Carrier A United Technologies Company	THIS DOCUMENT IS THE PROPERTY OF CARRIER CORPORATION AND IS DELIVERED UPON THE EXPRESS CONDITION THAT THE CONTENTS WILL NOT BE DISCLOSED OR USED WITHOUT CARRIER CORPORATION'S WRITTEN CONSENT	SUBMISSION OF THESE DRAWINGS OR DOCUMENTS DOES NOT CONSTITUTE PART PERFORMANCE OR ACCEPTANCE OF CONTRACT	INTERMITTENT FAN	45 MD,ND,RD

BACnet INTERMITTENT FAN POWERED — PROPORTIONAL (FLOATING) HOT WATER HEAT CARRIER CONTROL PACKAGE NO. 4784

Application:

Intermittent fan powered terminals are designed to provide heating and cooling for perimeter zones. These terminals are also used in interior zones, where a combination of primary air mixed with recirculated air provides increased air movement and improved ventilation. A typical application is shown in Fig. 1. Design, load requirements, downstream (external) static pressure, fan performance and sound level acceptability govern terminal selection and sizing. The terminal fan performance is selected to provide sufficient pressure to overcome the coil pressure drop and external static pressure. (It is important that the correct fan and fan speed be selected to ensure that sufficient Btu's can be delivered to meet the heating and cooling load requirements.) The controls provide variable air volume (VAV) control of the primary air for cooling and operates a modulating hot water valve connected to a heating coil to supplement fan induced plenum heat during heating. If enabled, a control option can energize the fan during cooling when the zone's cooling load falls below a user-adjustable minimum airflow set point. This feature prevents cold air 'dumping' from the diffusers, while providing improved ventilation at a lower minimum cooling airflow set points. (The fan set point is set to a CFM value slightly above the minimum cooling CFM set point.) When the primary air source is cooling, should the zone require heat, the fan operates to draw in air from the ceiling plenum to provide heat to the zone. The fan operates to provide ceiling plenum heat, and in addition, the hot water valve operates as required to supplement this heat. A wall-mounted space temperature (SPT) sensor located in each zone will sense load requirements and activate the control sequence to accommodate cooling or heating. This control package provides the following sequences of operations:

A. Cooling: (refer to numbers on flow diagram). See Fig. 2.
   1. 1-2 indicates that maximum primary airflow is established by the user-defined maximum cooling airflow set point until the zone comes under control at 2. The fan is disabled.
   2. Beginning at 2, the primary airflow is regulated over a throttling range by the damper until the minimum cooling airflow set point is reached at 3. (It must be noted that the minimum cooling airflow set point could be set to zero by the user. In this case, the damper will fully close if the zone temperature continues to fall.) Optionally, as the primary airflow is reduced, the fan operates to increase air circulation and improve ventilation when the primary airflow falls below the user-defined airflow set point.
   3. 3-4 indicates that, should the zone temperature continue to fall, the damper will hold the user-defined minimum cooling airflow set point.

B. Auxiliary hot water heating: (when the primary air source is cooling, refer to numbers on flow diagram). See Fig. 2.
   1. Should the zone temperature fall below the occupied heating set point, the Occupied Heating mode is in effect at 4.

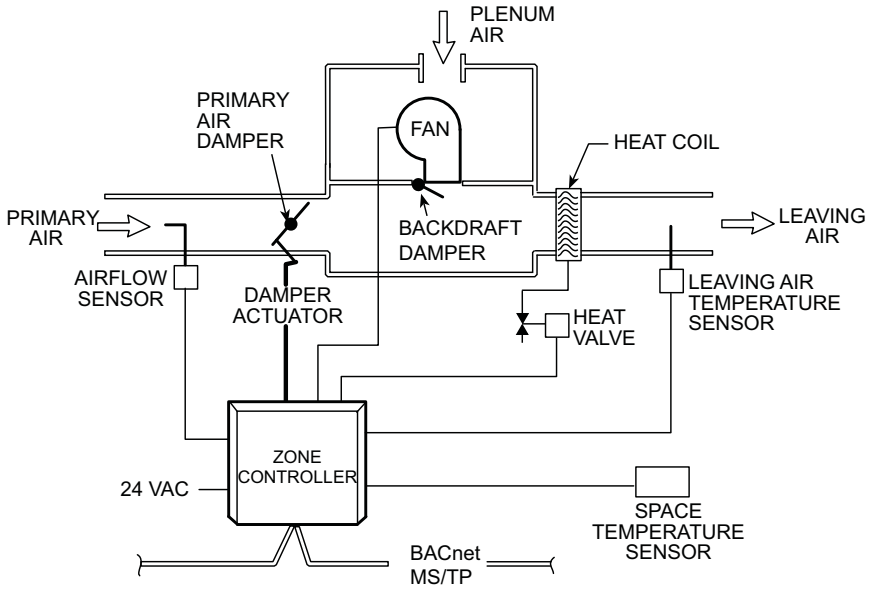

Figure 1 - Intermittent Fan Powered Air Terminal With Proportional Hot Water Heat

2. The fan is energized to induce heated plenum air to warm the zone.
3. After supplying plenum heat for the user-specified heat delay, the heat was insufficient to raise the zone's temperature, then at 5, the hot water valve will modulate open to provide the necessary heat to the zone. The valve is controlled so as not to exceed the maximum discharge temperature. During the Heating mode, the primary airflow is maintain at the user-defined minimum cooling airflow set point.
4. When the zone temperature rises above the occupied heating set point, the valve modulates closed. After the valve has closed and an adjustable delay has expired, the fan is disabled and the Ventilation mode is reactivated at 4.

C. Heating: (when the primary air source is providing heated air, refer to numbers on flow diagram). See Fig. 2.

1. Upon receiving a heating signal generated by the air source equipped with BACnet controls (or a primary air temperature sensor is installed to detect that the air source is heating), should the zone temperature fall below the occupied heating set point, the Heating mode is in effect at 4'.
2. The damper will maintain the minimum heating airflow set point at 4'. The fan will be energized and the water valve will modulate open as required to supplement the induced air heat from the ceiling plenum.
3. The control may be configured to provide variable volume heating. In that case the damper is throttled between the user-defined minimum heating airflow set point at 4' and the user-defined maximum heating airflow set point at 6. The fan will operate during this cycle. If VAV heating is enabled, it is important to limit the maximum heating set point so that the combined airflow of both the fan and the maximum heating set point do not exceed the maximum for the zone's diffusers.

D. Morning warm-up: (configured to provide constant volume heating)
Upon receiving a morning warm-up signal generated by the air source equipped with BACnet controls, the primary air damper will maintain the minimum heating airflow set point. The terminal fan will operate to provide plenum air to the space and the water valve will modulate as required to supplement the plenum heat. The valve is controlled so as not to exceed the maximum discharge temperature. The control may be configured to provide variable volume heating. In that case the damper is throttled between the user-defined minimum heating air flow set point at 4' and the user-defined maximum heating airflow set point at 6. The fan will operate during this cycle. If VAV heating is enabled, it is important to limit the maximum heating set point so that the combined airflow of both the fan and the maximum heating set point do not exceed the maximum for the zone's diffusers.

E. Unoccupied time period: (cooling)
When the unoccupied period is reached, the user-defined occupied cooling set point is reset upward to a user-defined unoccupied cooling set point. If the primary air source is operating, the primary air damper will throttle in the same manner (as per A) during the unoccupied period, using the unoccupied cooling set point.

F. Unoccupied time period: (auxiliary hydronic heating when the air source is off)
When the unoccupied period is reached, the user-defined occupied heating set point is reset downward to a user-defined unoccupied heating set point. If the zone's temperature falls below the unoccupied heating set point, the Unoccupied Heating mode is in effect. The terminal fan will start and the primary air damper will fully close. The water valve will modulate open to supplement the plenum air heat as required. When the zone's temperature rises above the unoccupied heating set point, the water valve will modulate closed. After the valve has fully closed and the user-defined fan delay has expired, the fan will be disabled. The primary air damper will then be returned to

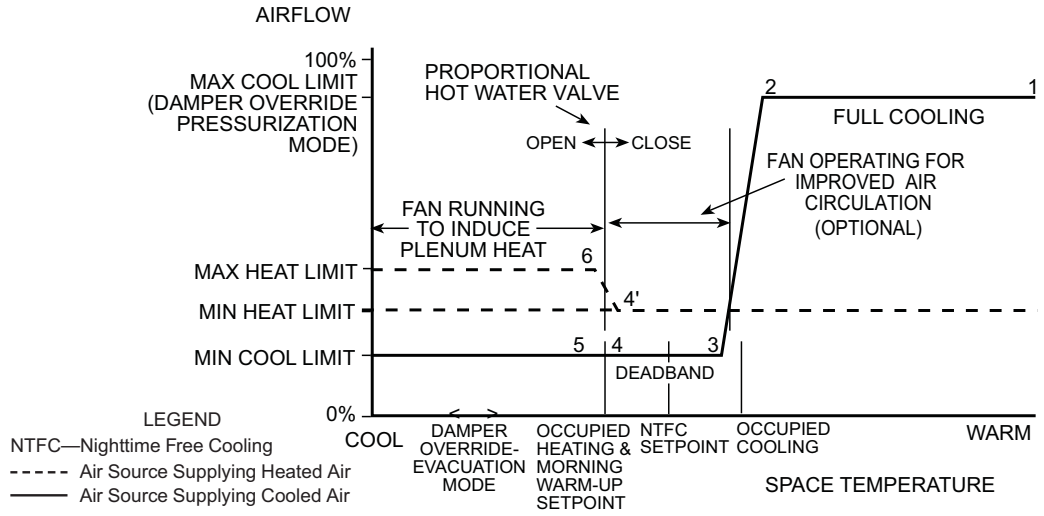

Figure 2 - Sequence of Operation for Intermittent Fan Powered Air Terminal With Proportional Hot Water Heat

JOB NAME	JOB NUMBER	LOCATION	PAGE NUMBER	DRAWING NUMBER
BUYER	BUYER #	SHEET	2 OF 4	45M/N/R-D-4784

a 50% open position to allow the primary air source to properly start.

G. Unoccupied time period: (heating)
When the unoccupied period is reached, the user-defined occupied heating set point is reset downward to a user-defined unoccupied heating set point. The primary air damper will operate in the same manner (as per C) during the unoccupied period, using the unoccupied heating set point.

H. Demand controlled ventilation (option):
This mode is initiated when the zone is occupied and the air source is not heating. It occurs when the BACnet control receives a cooling signal from the air source equipped with BACnet controls, or when a primary air temperature sensor is installed to detect the air source operation is cooling. The control will monitor a CO_2 sensor (optional) and determine if ventilation is adequate. The zone CO_2 level is compared to the ventilation set point. If the CO_2 level is above the set point (insufficient ventilation), the airflow set point is increased appropriately to maintain proper ventilation. Should the zone's temperature fall below the heating set point, the control will suspend ventilation override until the zone's temperature recovers. If after supplying plenum heat for the user-specified heat delay, the heat was insufficient to raise the zone's temperature, then heating will be enabled and will operate as per B.

I. Humidity control (option):
This mode is initiated when the zone is occupied and the primary air source is cooling. It occurs when the BACnet control receives a cooling signal from the air source equipped with BACnet controls, or when a primary air temperature sensor is installed to detect the air source operation is cooling. The control will monitor a relative humidity (RH) sensor (optional) and determine if the zone's RH is above the humidity set point. If the RH level is above the RH set point, the airflow control point is increased to displace the humid air in the space with air from the primary air source (which has a lower dew point). To ensure non-simultaneous operation of both heating and cooling, should the increased airflow cause the zone's temperature to fall below the heating set point, the control will first suspend the airflow override and reduce the airflow to the minimum cooling set point. The fan will operate to induce plenum air heat to warm the zone. If after supplying plenum heat for the user-specified heat delay, the heat was insufficient to raise the zone's temperature, then heating will be enabled and will operate as per B. The airflow override will resume when the zone's temperature recovers and be disabled once the zone's RH level falls below the zone's RH set point.

J. Damper override:
The damper override function is energized through the use of a field-supplied smoke control panel connected to the air source equipped with BACnet controls. The smoke control panel and installation must be in accordance with UL864 and local codes. The damper override function overrides the airflow setting used by the logic. It will cause the terminal to provide the configured maximum cooling airflow when the air source is in the Pressurization mode, and to disable the fan (if operating) and fully close the primary air damper when the air source is in the Evacuation mode.

K. Nighttime free cooling:
The logic calculates a nighttime free cooling (NTFC) temperature set point halfway between the occupied heating and occupied cooling temperature set points. Upon receiving a NTFC signal generated by the air source equipped with BACnet controls (or a primary air temperature sensor is installed to detect the air source is operating in the NTFC mode), the primary air damper will modulate between the maximum and minimum cooling airflow set points to maintain the zone's NTFC temperature set point. The terminal fan will remain off.

L. Primary air source shuts off:
1. The fan will be disabled unless the zone temperature falls below the heating set point (refer to C).
2. The damper will fully close and the control will recalibrate the airflow transducer.
3. If the primary air source remains off (no primary air), the damper will be repositioned to 50% open to allow the air source to restart.

JOB NAME	JOB NUMBER	LOCATION	PAGE NUMBER	DRAWING NUMBER
BUYER	BUYER #	SHEET	3 OF 4	45M/N/R-D-4784

CODE	Carrier A United Technologies Company	THIS DOCUMENT IS THE PROPERTY OF CARRIER CORPORATION AND IS DELIVERED UPON THE EXPRESS CONDITION THAT THE CONTENTS WILL NOT BE DISCLOSED OR USED WITHOUT CARRIER CORPORATION'S WRITTEN CONSENT	SUBMISSION OF THESE DRAWINGS OR DOCUMENTS DOES NOT CONSTITUTE PART PERFORMANCE OR ACCEPTANCE OF CONTRACT	INTERMITTENT FAN	45 MD,ND,RD
CATALOG #					

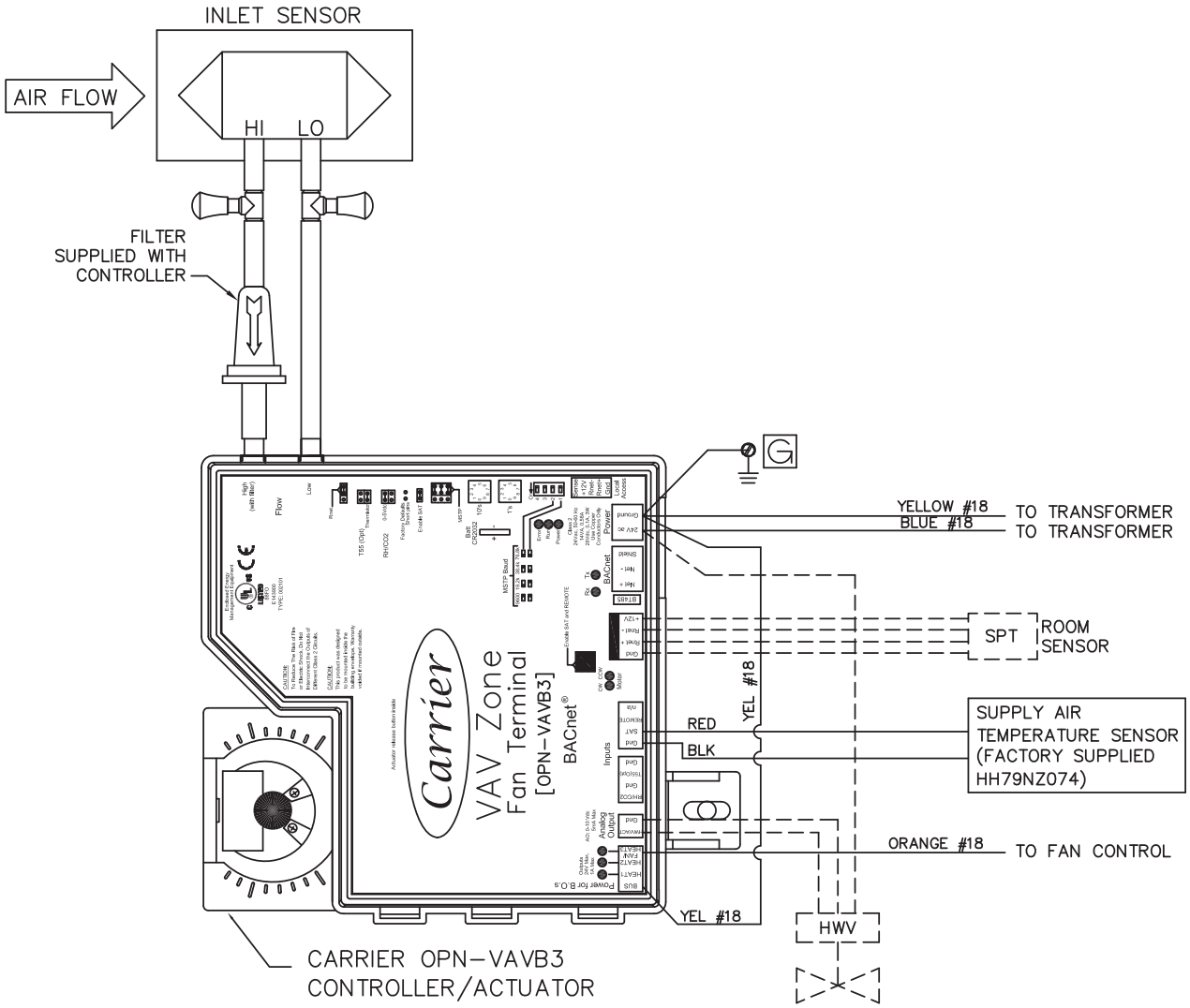

Notes:

1. For 45M/N/R units the Actuator is configured CW to close.

2. CAUTION:
   Electric shock may result. Disconnect unit prior to servicing unit.
3. These controls have been wired to comply with UL-1995.

PRODUCT INFORMATION IS SUBJECT TO CHANGE WITHOUT NOTICE.

JOB NAME	JOB NUMBER	LOCATION	PAGE NUMBER	DRAWING NUMBER
BUYER	BUYER #	SHEET	4 OF 4	45M/N/R-D-4784

CODE CATALOG #	Carrier A United Technologies Company	THIS DOCUMENT IS THE PROPERTY OF CARRIER CORPORATION AND IS DELIVERED UPON THE EXPRESS CONDITION THAT THE CONTENTS WILL NOT BE DISCLOSED OR USED WITHOUT CARRIER CORPORATION'S WRITTEN CONSENT.	SUBMISSION OF THESE DRAWINGS OR DOCUMENTS DOES NOT CONSTITUTE PART PERFORMANCE OR ACCEPTANCE OF CONTRACT.	INTERMITTENT FAN	45 MD,ND, RD

BACnet INTERMITTENT FAN POWERED—WITH PROPORTIONAL ELECTRIC HEAT CARRIER CONTROL PACKAGE NO. 4794

Application:

Intermittent fan powered terminals are designed to provide heating and cooling for perimeter zones. These terminals are also used in interior zones, where a combination of primary air mixed with recirculated air provides increased air movement and improved ventilation. A typical application is shown in Fig. 1. Design, load requirements, downstream (external) static pressure, fan performance and sound level acceptability govern terminal selection and sizing. The terminal fan performance is selected to provide sufficient pressure to overcome the coil pressure drop and external static pressure. (It is important that the correct fan and fan speed be selected to ensure that sufficient airflow is available for the electric heat coil.) The controls provide variable air volume (VAV) control of the primary air for cooling and operate a proportional electric heating coil to supplement fan-induced plenum heat during heating. If enabled, a control option can energize the fan during cooling when the zone's cooling load falls below a user-adjustable minimum airflow set point. This feature prevents cold air 'dumping' from the diffusers, while providing improved ventilation at a lower minimum cooling airflow set points. (The fan set point is set to a CFM value slightly above the minimum cooling CFM set point.) When the primary air source is cooling, should the zone require heat, the fan operates to draw in air from the ceiling plenum to provide heat to the zone. The fan operates to provide ceiling plenum heat, and in addition, the proportional electric heat operates as required to supplement this heat. A wall-mounted space temperature (SPT) sensor located in each zone will sense load requirements and activate the control sequence to accommodate cooling or heating. This control package provides the following sequences of operation:

A. Cooling:

Refer to numbers on flow diagram. See Fig. 2.

1. Between 1 and 2, the maximum primary airflow is established by the user-defined maximum cooling airflow set point until the zone comes under control at 2. The fan is disabled.
2. Beginning at 2, the primary airflow is regulated over a throttling range by the damper until the minimum cooling airflow set point is reached at 3. (It must be noted that the minimum cooling airflow set point could be set to zero by the user. In this case, the damper will fully close if the zone temperature continues to fall.) Optionally, as the primary airflow is reduced, the fan operates to increase air circulation and improve ventilation when the primary airflow falls below the user-defined airflow set point.
3. Between 3 and 4, should the zone temperature continue to fall, the damper will hold the user-defined minimum cooling airflow set point.

B. Auxiliary electric heating when the primary air source is providing cooling:

Refer to numbers on flow diagram. See Fig. 2.

1. Should the zone temperature fall below the occupied heating set point, the Occupied Heating mode is in effect at 4.

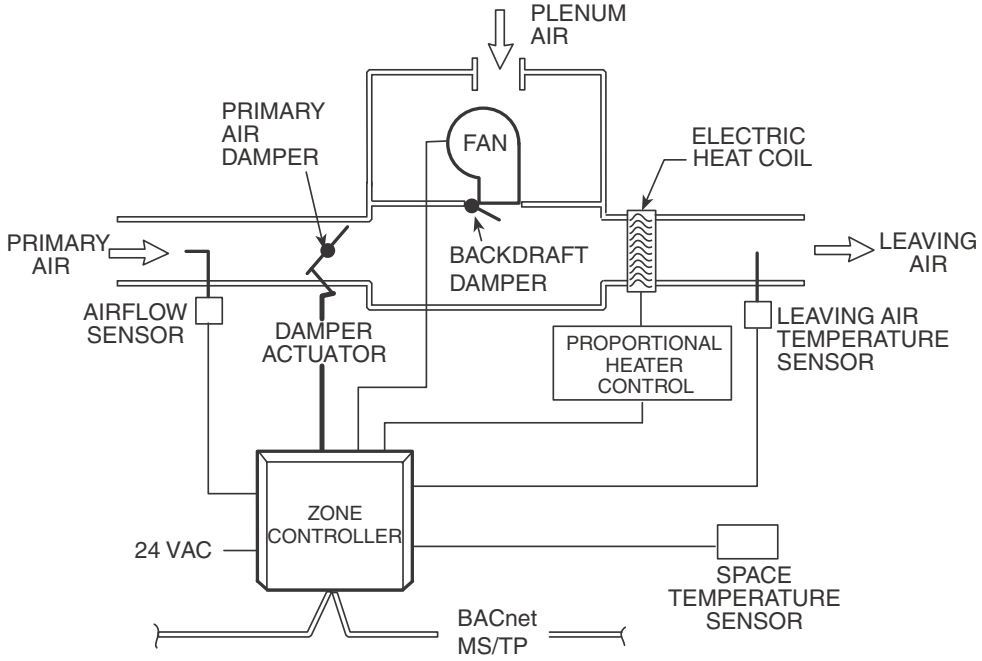

Figure 1 — Intermittent Fan Powered Air Terminal with Proportional Electric Heat

PRODUCT INFORMATION IS SUBJECT TO CHANGE WITHOUT NOTICE. 06/15/2010

JOB NAME	JOB NUMBER	LOCATION	PAGE NUMBER	DRAWING NUMBER
BUYER	BUYER #	SHEET	1 OF 4	45M/N/R-D-4794

2. The fan is energized to induce heated plenum air to warm the zone.
3. After supplying plenum heat for the user-specified heat delay, if the heat was insufficient to raise the zone's temperature, then at 5, the proportional electric heat will modulate to provide the necessary heat to the zone. The heater is controlled so as not to exceed the maximum discharge temperature. During the Heating mode, the primary airflow is maintain at the user-defined minimum cooling airflow set point.
4. When the zone temperature rises above the occupied heating set point, the heater output is reduced to zero. After an adjustable delay has expired, the fan is disabled and the Ventilation mode is activated at 4.

C. Heating when the primary air source is providing heated air:

Refer to numbers on flow diagram. See Fig. 2.

1. Upon receiving a heating signal generated by the air source equipped with BACnet controls (or a primary air temperature sensor is installed to detect that the air source is heating), should the zone temperature fall below the occupied heating set point, the Heating mode is in effect at 4'.
2. The damper will maintain the minimum heating airflow set point at 4'. The fan will be energized and the proportional electric heat will modulate as required to supplement the induced air heat from the ceiling plenum.
3. The control may be configured to provide variable volume heating. In that case the damper is throttled between the user-defined minimum heating airflow set point at 4' and the user-defined maximum heating airflow set point at 6. The fan will operate during this cycle. If VAV heating is enabled, it is important to limit the maximum heating set point so that the combined airflow of both the fan and the maximum heating set point do not exceed the maximum for the zone's diffusers.

D. Morning warm-up (configured to provide constant volume heating):

Upon receiving a morning warm-up signal generated by the air source equipped with BACnet controls, the primary air damper will maintain the minimum heating airflow set point. The terminal fan will operate to provide plenum air to the space and the proportional electric heat will modulate as required to supplement the plenum heat. The heater is controlled so as not to exceed the maximum discharge temperature. The control may be configured to provide variable volume heating. In that case the damper is throttled between the user-defined minimum heating airflow set point at 4' and the user-defined maximum heating airflow set point at 6. The fan will operate during this cycle. If VAV heating is enabled, it is important to limit the maximum heating set point so that the combined airflow of both the fan and the maximum heating set point do not exceed the maximum for the zone's diffusers.

E. Unoccupied time period (cooling):

When the unoccupied period is reached, the user-defined occupied cooling set point is reset upward to a user-defined unoccupied cooling set point. If the primary air source is operating, the primary air damper will throttle in the same manner (as per A) during the unoccupied period, using the unoccupied cooling set point.

F. Unoccupied time period (auxiliary electric heating when the air source is off):

When the unoccupied period is reached, the user-defined occupied heating set point is reset downward to a user-defined unoccupied heating set point. If the zone's temperature falls below the unoccupied heating set point, the Unoccupied Heating mode is in effect. The terminal fan will start and the primary air damper will fully close. The proportional electric heat will modulate to supplement the plenum air heat as required. When the zone's temperature rises above the unoccupied heating set point, the heater output is reduced to zero. After the user-defined fan delay has expired, the fan will be disabled. The primary air damper will then be

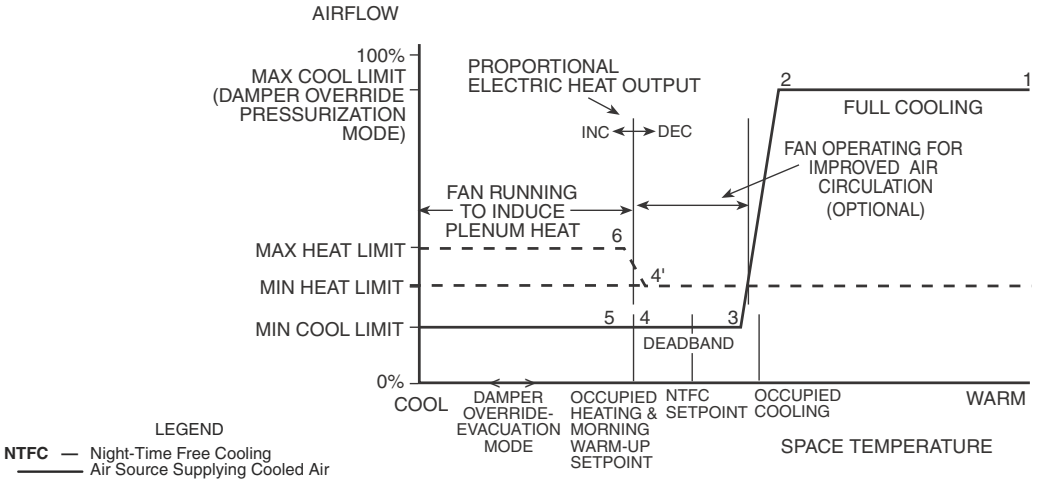

Figure 2 — Sequence of Operation for Intermittent Fan Powered Air Terminal with Proportional Electric Heat

opened to at least 50% to allow the primary air source to properly start.

G. Unoccupied time period (heating):

When the unoccupied period is reached, the user-defined occupied heating set point is reset downward to a userdefined unoccupied heating set point. The primary air damper will operate in the same manner (as per C) during the unoccupied period, using the unoccupied heating set point.

H. Demand controlled ventilation (option):

This mode is initiated when the zone is occupied and the air source is not heating. It occurs when the BACnet control receives a cooling signal from the air source equipped with BACnet controls, or when a primary air temperature sensor is installed to detect the air source operation is cooling. The control will monitor a CO_2 sensor (optional) and determine if ventilation is adequate. The zone CO_2 level is compared to the ventilation set point. If the CO_2 level is above the set point (insufficient ventilation), the airflow set point is increased appropriately to maintain proper ventilation. Should the zone's temperature fall below the heating set point, the control will suspend ventilation override until the zone's temperature recovers. If after supplying plenum heat for the user-specified heat delay, the heat was insufficient to raise the zone's temperature, then heating will be enabled and will operate as per B.

I. Humidity control (option):

This mode is initiated when the zone is occupied and the primary air source is cooling. It occurs when the BACnet control receives a cooling signal from the air source equipped with BACnet controls, or when a primary air temperature sensor is installed to detect the air source operation is cooling. The control will monitor a relative humidity (RH) sensor (optional) and determine if the zone's RH is above the humidity set point. If the RH level is above the RH set point, the airflow control point is increased to displace the humid air in the space with air from the primary air source (which has a lower dew point). To ensure non-simultaneous operation of both heating and cooling, should the increased airflow cause the zone's temperature to fall below the heating set point, the control will first suspend the airflow override and reduce the airflow to the minimum cooling set point. The fan will operate to induce plenum air heat to warm the zone. If after supplying plenum heat for the user-specified heat delay, the heat was insufficient to raise the zone's temperature, then heating will be enabled and will operate as per B. The airflow override will resume when the zone's temperature recovers and be disabled once the zone's RH level falls below the zone's RH set point.

J. Damper override:

The damper override function is energized through the use of a field-supplied smoke control panel connected to the air source equipped with BACnet controls. The smoke control panel and installation must be in accordance with UL864 and local codes. The damper override function overrides the airflow setting used by the logic. It will cause the terminal to provide the configured maximum cooling airflow when the air source is in the Pressurization mode, and to disable the fan (if operating) and fully close the primary air damper when the air source is in the Evacuation mode.

K. Nighttime free cooling:

The logic calculates a nighttime free cooling (NTFC) temperature set point halfway between the occupied heating and occupied cooling temperature set points. Upon receiving a NTFC signal generated by the air source equipped with BACnet controls (or a primary air temperature sensor is installed to detect the air source is operating in the NTFC mode), the primary air damper will modulate between the maximum and minimum cooling airflow set points to maintain the zone's NTFC temperature set point. The terminal fan will remain off.

L. Primary air source shuts off:

1. The fan will be disabled unless the zone temperature falls below the heating set point (refer to C).
2. The damper will fully close and the control will recalibrate the airflow transducer.
3. If the primary air source remains off (no primary air), the damper will be repositioned to 50% open to allow the air source to restart.

CODE CATALOG #	Carrier A United Technologies Company	THIS DOCUMENT IS THE PROPERTY OF CARRIER CORPORATION AND IS DELIVERED UPON THE EXPRESS CONDITION THAT THE CONTENTS WILL NOT BE DISCLOSED OR USED WITHOUT CARRIER CORPORATION'S WRITTEN CONSENT.	SUBMISSION OF THESE DRAWINGS OR DOCUMENTS DOES NOT CONSTITUTE PART PERFORMANCE OR ACCEPTANCE OF CONTRACT.	INTERMITTENT FAN	45 MD,ND, RD

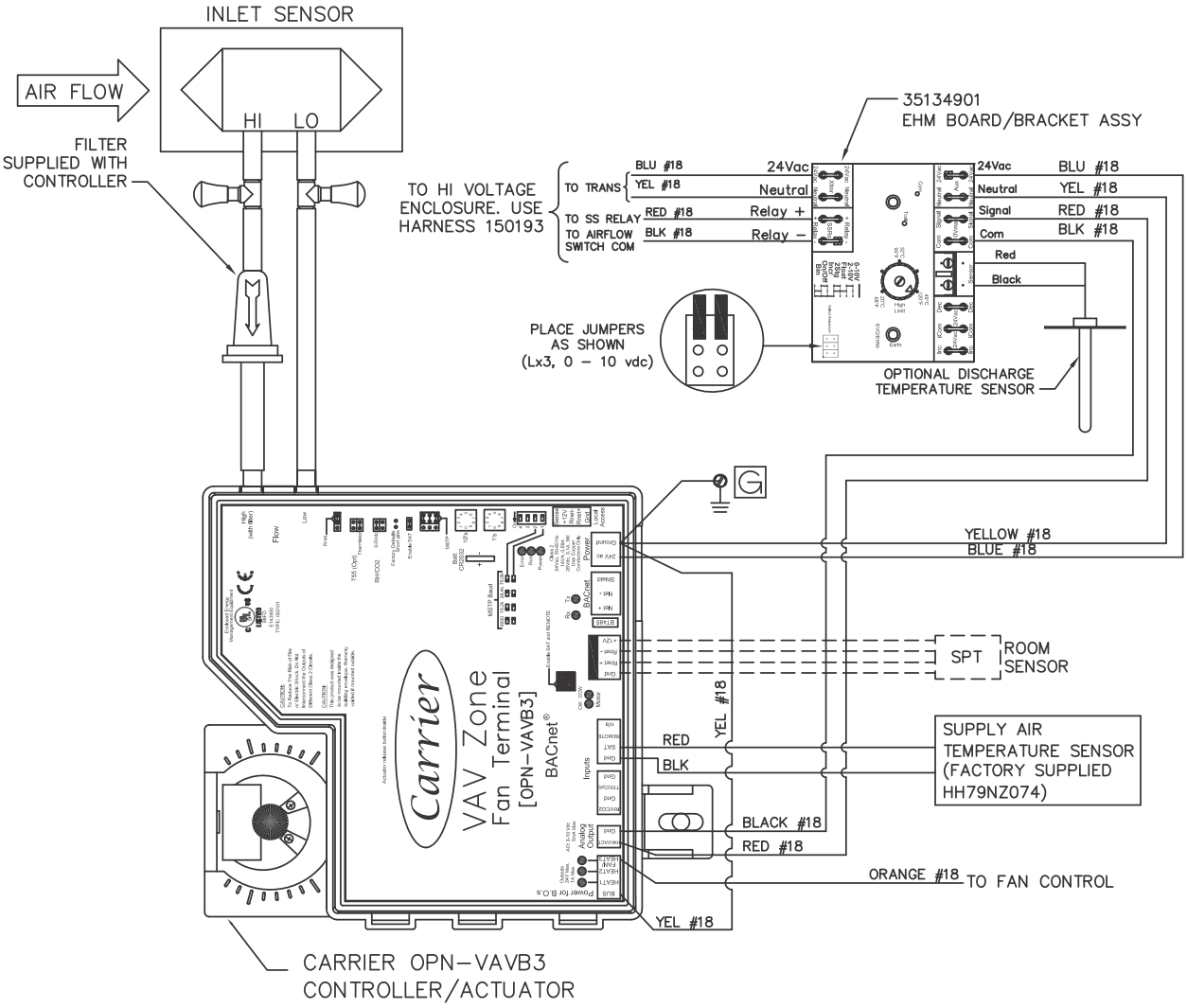

LEGEND

CCW	—	Counterclockwise
COM	—	Common
CW	—	Clockwise
DMPPOS	—	Damper Position
GND	—	Ground
PAT	—	Primary Air Temperature Sensor
SAT	—	Supply Air Temperature Sensor
SPT	—	Space Temperature Sensor
- - - -		Field-Supplied Wiring
———		Factory Wiring

NOTES:

1. For 45M/N units, the actuator is configured CW to close. For 45R units, the actuator is configured CCW to close.
2. CAUTION: Electric shock may result. Disconnect prior to servicing unit.
3. These controls have been wired to comply with UL-1995.

PRODUCT INFORMATION IS SUBJECT TO CHANGE WITHOUT NOTICE. 06/15/2010

JOB NAME	JOB NUMBER	LOCATION	PAGE NUMBER	DRAWING NUMBER
BUYER	BUYER #	SHEET	4 OF 4	45M/N/R-D-4794

CODE CATALOG #	Carrier A United Technologies Company	THIS DOCUMENT IS THE PROPERTY OF CARRIER CORPORATION AND IS DELIVERED UPON THE EXPRESS CONDITION THAT THE CONTENTS WILL NOT BE DISCLOSED OR USED WITHOUT CARRIER CORPORATION'S WRITTEN CONSENT.	SUBMISSION OF THESE DRAWINGS OR DOCUMENTS DOES NOT CONSTITUTE PART PERFORMANCE OR ACCEPTANCE OF CONTRACT.	VARIABLE VOLUME, VARIABLE TEMPERATURE	45 MV,NV, RV

3V™ VVT® PARALLEL (INTERMITTENT) FAN POWERED TERMINAL CONTROL WITHOUT HEAT, PRESSURE DEPENDENT

CARRIER CONTROL PACKAGE NO. 8815

Application:

Parallel fan powered terminals equipped with the above control package are designed to work with cooling only primary air source equipment and provide pressure dependent, variable volume, variable temperature (VVT) control when connected to a VVT zone thermostat. The intermittent terminal fan is used to pull in ceiling plenum air to provide heat to the zone. These systems allow a low minimum inlet static pressure, permitting the use of smaller, more energy efficient fan systems. The minimum airflow set point may be set to zero. The fan provides airflow to the zone when the primary air source is off.

A wall-mounted thermostat located in each zone will sense load requirements and activate the control sequence to accommodate cooling or heating. Load requirements and sound level acceptability govern terminal sizing. This control package provides the following sequences of operations:

A. Cooling:

When the primary air source is providing cooling (as detected by the primary air sensor), refer to numbers on flow diagram. See Fig. 1.

1. Between 1 and 2, maximum airflow is established by the user-defined maximum damper position until the zone comes under control at 2.
2. Beginning at 2, the airflow is regulated over a throttling range by the damper until the user-defined minimum damper position is reached at 3.
3. Between 3 and 4, should the zone temperature continue to fall, the damper will hold the minimum damper position.

NOTE: The minimum damper position could be set to zero on any one zone. In this case, the damper will hold a fully closed position if the zone temperature continues to fall.

B. Induced warm plenum air reheat:

When the primary air source is cooling, refer to numbers on flow diagram. See Fig. 1.

1. As the zone temperature falls below the occupied heating set point, the Occupied Heating mode is in effect at 4'.
2. At 1.5 degrees demand, the airflow is increased to the user-defined supplemental damper position. The terminal fan is energized to induce heated plenum air to warm the zone.
3. As the zone temperature rises to less than 0.5 degrees of demand, the fan is deenergized.

C. Unoccupied time period (cooling):

When the unoccupied period is reached, the user-defined occupied cooling set point is reset upward to a user-defined unoccupied cooling set point. The damper will throttle in the same manner (as per A) during the unoccupied period, using the unoccupied cooling set point.

D. Unoccupied time period (induced plenum air heat):

When the unoccupied period is reached, the user-defined occupied heating set point is reset downward to a user-defined unoccupied heating set point. The fan will operate as required to satisfy the heating load.

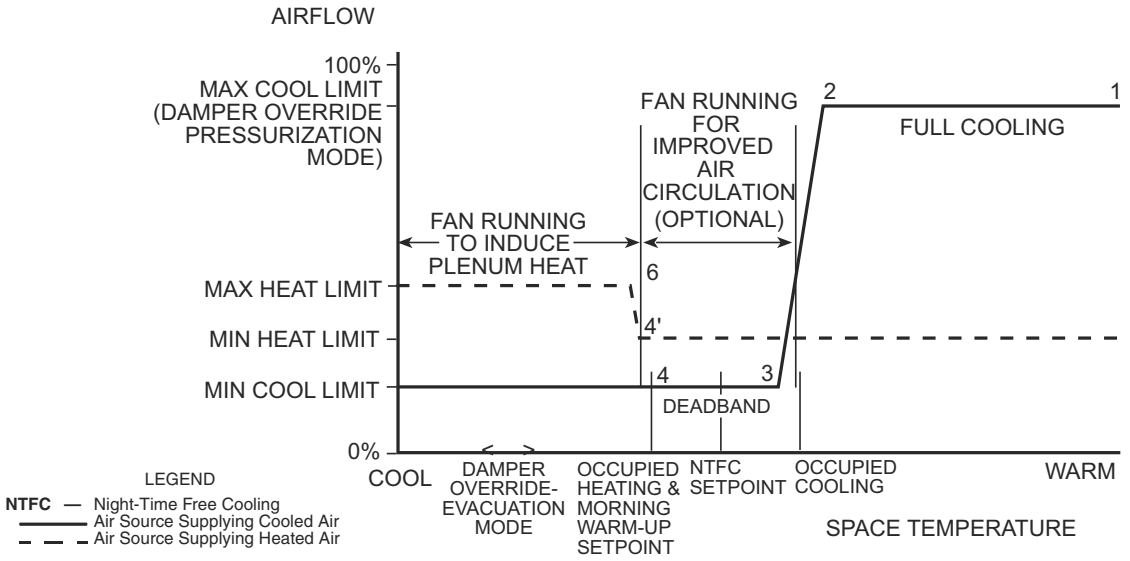

Figure 1 — Sequence of Operation for VVT, Intermittent Fan Powered Air Terminal without Heat

PRODUCT INFORMATION IS SUBJECT TO CHANGE WITHOUT NOTICE. 01/15/2009

JOB NAME	JOB NUMBER	LOCATION	PAGE NUMBER	DRAWING NUMBER
BUYER	BUYER #	SHEET	1 OF 2	45M/N/R-V-8815

CODE CATALOG #	Carrier A United Technologies Company	THIS DOCUMENT IS THE PROPERTY OF CARRIER CORPORATION AND IS DELIVERED UPON THE EXPRESS CONDITION THAT THE CONTENTS WILL NOT BE DISCLOSED OR USED WITHOUT CARRIER CORPORATION'S WRITTEN CONSENT.	SUBMISSION OF THESE DRAWINGS OR DOCUMENTS DOES NOT CONSTITUTE PART PERFORMANCE OR ACCEPTANCE OF CONTRACT.	VARIABLE VOLUME, VARIABLE TEMPERATURE	45 MV,NV, RV

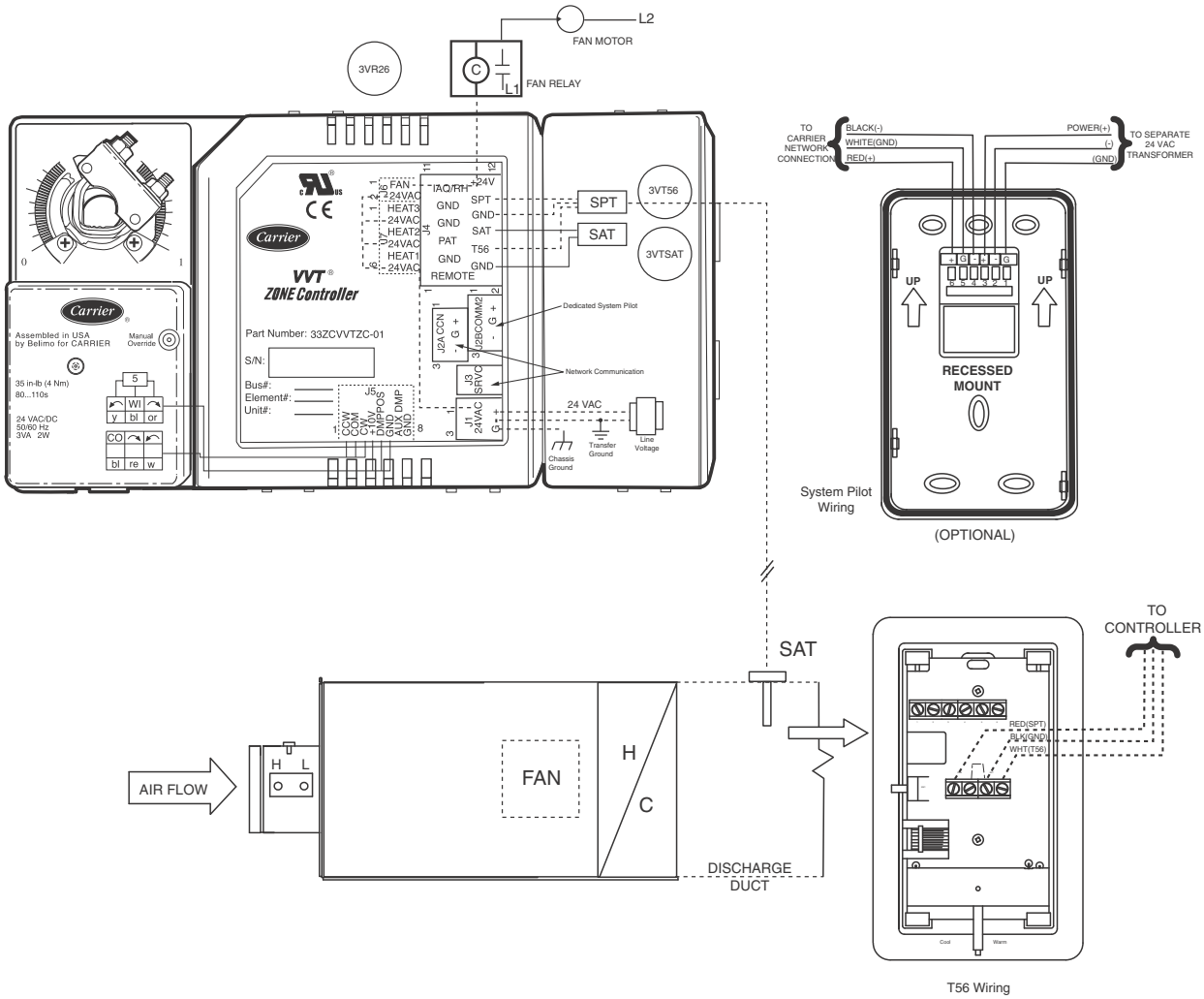

LEGEND

AUX DMP	—	Auxiliary Damper
C	—	Contactor
CCW	—	Counterclockwise
COM	—	Common
CW	—	Clockwise
DMPPOS	—	Damper Position
GND	—	Ground
IAQ/RH	—	Indoor Air Quality/Relative Humidity
PAT	—	Primary Air Temperature Sensor
SAT	—	Supply Air Temperature Sensor
SPT	—	Space Temperature Sensor
– – – –		Field-Supplied Wiring
———		Factory Wiring

PRODUCT INFORMATION IS SUBJECT TO CHANGE WITHOUT NOTICE. 01/15/2009

JOB NAME	JOB NUMBER	LOCATION	PAGE NUMBER	DRAWING NUMBER
BUYER	BUYER #	SHEET	2 OF 2	45M/N/R-V-8815

CODE CATALOG #	Carrier A United Technologies Company	THIS DOCUMENT IS THE PROPERTY OF CARRIER CORPORATION AND IS DELIVERED UPON THE EXPRESS CONDITION THAT THE CONTENTS WILL NOT BE DISCLOSED OR USED WITHOUT CARRIER CORPORATION'S WRITTEN CONSENT	SUBMISSION OF THESE DRAWINGS OR DOCUMENTS DOES NOT CONSTITUTE PART PERFORMANCE OR ACCEPTANCE OF CONTRACT	VARIABLE VOLUME, VARIABLE TEMPERATURE	45 MV,NV,RV

VVT® PARALLEL (INTERMITTENT) FAN POWERED TERMINAL CONTROL WITH ON/OFF HOT WATER HEAT
PRESSURE DEPENDENT
CARRIER CONTROL PACKAGE NO. 8818

Application:

Parallel fan powered terminals equipped with the above control package are designed to work with cooling only primary air source equipment and provide pressure dependent, variable volume, variable temperature (VVT) control when connected to a VVT zone thermostat. The intermittent terminal fan is used to pull in ceiling plenum air as the first stage of heat and provide sufficient airflow when the hydronic heat is energized. These systems allow a low minimum inlet static pressure, permitting the use of smaller, more energy efficient fan systems. Hot water reheat coils located at each terminal can additionally satisfy zone heating loads when the equipment is providing cooling. The minimum airflow set points can be set to zero. The fan provides airflow across the heat coil when the primary air source is off.

A wall-mounted thermostat located in each zone will sense load requirements and activate the control sequence to accommodate cooling or heating. Load requirements and sound level acceptability govern terminal sizing. This control package provides the following sequences of operations:

A. Cooling: When the primary air source is providing cooling (as detected by the primary air sensor), refer to numbers on flow diagram. See Fig. 1.
   1. 1-2 indicates that maximum airflow is established by the user-defined maximum damper position until the zone comes under control at 2.
   2. Beginning at 2, the airflow is regulated over a throttling range by the damper until the user-defined minimum damper position is reached at 3.
   3. 3-4 indicates that, should the zone temperature continue to fall, the damper will hold the minimum damper position.

NOTE: The minimum damper position could be set to zero on any one zone. In this case, the damper will hold a fully closed position if the zone temperature continues to fall.

B. Hot water reheat: When the primary air source is cooling, refer to numbers on flow diagram.
   1. As the zone temperature falls below the occupied heating set point, the Occupied Heating mode is in effect at 4.
   2. At 1.5 degrees below the set point, the airflow is increased to the user-defined supplemental damper position. The terminal fan is energized. At 2.0 degrees demand the hot water valve opens.

NOTE: If hydronic heat is configured on and the system fan has not yet been energized the valve will be open for a period of time before the system fan will be commanded on to allow the coil to heat up before delivering conditioned air.

   3. As the zone temperature rises, the hot water valve closes and the fan is deenergized.

C. Unoccupied time period: (cooling)
When the unoccupied period is reached, the user-defined occupied cooling set point is reset upward to a user-defined unoccupied cooling set point. The damper will throttle in the same manner (as per A) during the unoccupied period, using the unoccupied cooling set point.

D. Unoccupied time period: (auxiliary heat)
When the unoccupied period is reached, the user-defined occupied heating set point is reset downward to a user-defined unoccupied heating set point. The hot water valve and fan will operate as required to satisfy the heating load.

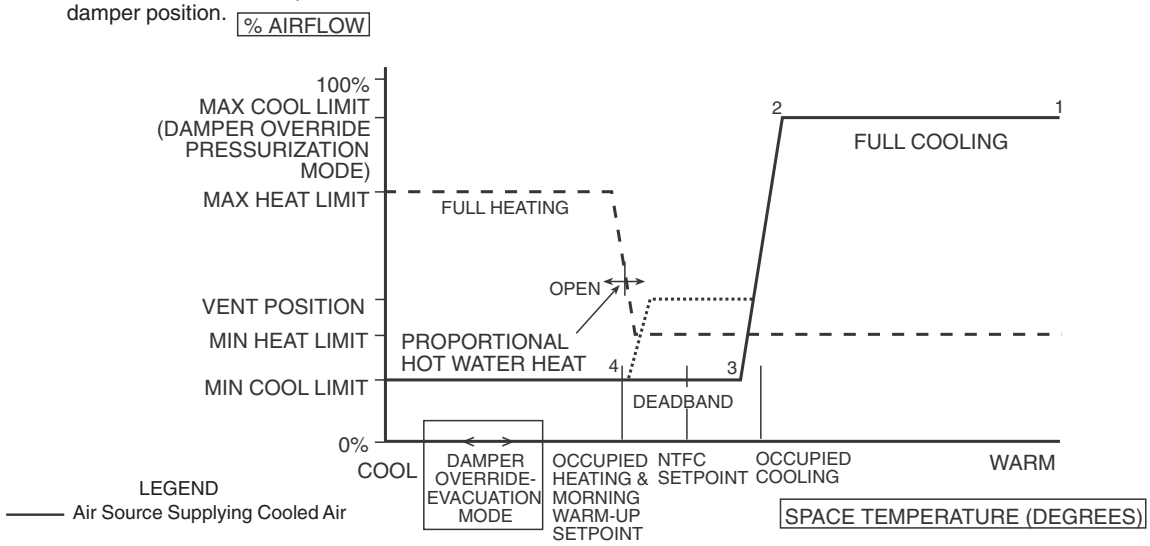

Figure 1 - Sequence of Operation for VVT, Cooling with Two-Position Hot Water Heat

PRODUCT INFORMATION IS SUBJECT TO CHANGE WITHOUT NOTICE. 02/14/2005

JOB NAME	JOB NUMBER	LOCATION	PAGE NUMBER	DRAWING NUMBER
BUYER	BUYER #	SHEET	1 OF 2	45M/N/R-V-8818

CODE	Carrier A United Technologies Company	THIS DOCUMENT IS THE PROPERTY OF CARRIER CORPORATION AND IS DELIVERED UPON THE EXPRESS CONDITION THAT THE CONTENTS WILL NOT BE DISCLOSED OR USED WITHOUT CARRIER CORPORATION'S WRITTEN CONSENT	SUBMISSION OF THESE DRAWINGS OR DOCUMENTS DOES NOT CONSTITUTE PART PERFORMANCE OR ACCEPTANCE OF CONTRACT	VARIABLE VOLUME, VARIABLE TEMPERATURE	45 MV,NV,RV
CATALOG #					

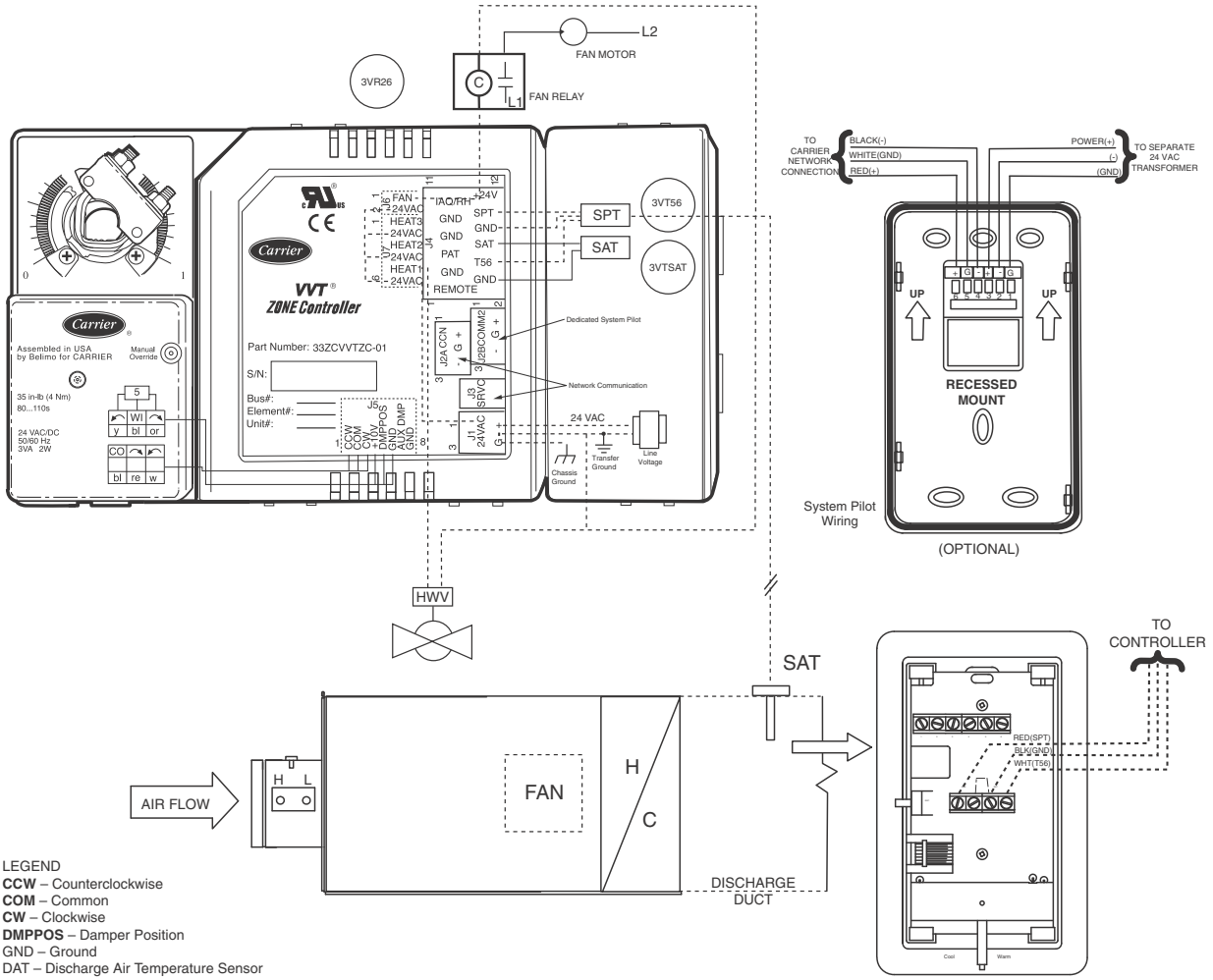

LEGEND
CCW – Counterclockwise
COM – Common
CW – Clockwise
DMPPOS – Damper Position
GND – Ground
DAT – Discharge Air Temperature Sensor
IAO – Indoor Air Quality
PAT – Primary Air Temperature Sensor
RH – Relative Humidity
SAT – Supply Air Temperature Sensor
SPT – Space Temperature Sensor
- - - - - - - - Field-Supplied Wiring
———— Factory Wiring

PRODUCT INFORMATION IS SUBJECT TO CHANGE WITHOUT NOTICE. 02/14/2005

JOB NAME	JOB NUMBER	LOCATION	PAGE NUMBER	DRAWING NUMBER
BUYER	BUYER #	SHEET	2 OF 2	45M/N/R-V-8818

CODE	Carrier A United Technologies Company	THIS DOCUMENT IS THE PROPERTY OF CARRIER CORPORATION AND IS DELIVERED UPON THE EXPRESS CONDITION THAT THE CONTENTS WILL NOT BE DISCLOSED OR USED WITHOUT CARRIER CORPORATION'S WRITTEN CONSENT	SUBMISSION OF THESE DRAWINGS OR DOCUMENTS DOES NOT CONSTITUTE PART PERFORMANCE OR ACCEPTANCE OF CONTRACT	VARIABLE VOLUME, VARIABLE TEMPERATURE	45 MV,NV,RV
CATALOG #					

3V™ VVT® PARALLEL (INTERMITTENT) FAN TERMINAL CONTROL WITH UP TO 3 STAGES OF ELECTRIC HEAT
PRESSURE DEPENDENT
CARRIER CONTROL PACKAGE NO. 8819

Application:

Parallel fan powered terminals equipped with the above control package are designed to work with cooling only primary air source equipment and to provide pressure dependent, variable volume, variable temperature (VVT) control when connected to a VVT zone thermostat. The intermittent terminal fan is used to pull in ceiling plenum air as the first stage of heat and provide sufficient airflow when the hydronic heat is energized. These systems allow a low minimum inlet static pressure, permitting the use of smaller, more energy efficient fan systems. Three-stage electric reheat coils located at each terminal can additionally satisfy zone heating loads when the equipment is providing cooling. The minimum airflow set point may be set to zero. The fan provides airflow across the heat coil when the primary air source is off.

A wall-mounted thermostat located in each zone will sense load requirements and activate the control sequence to accommodate cooling or heating. Load requirements and sound level acceptability govern terminal sizing. This control package provides the following sequences of operations:

A. Cooling: When the primary air source is providing cooling (as detected by the primary air sensor), refer to numbers on flow diagram. See Fig. 1.
   1. 1-2 indicates that maximum airflow is established by the user-defined maximum damper position until the zone comes under control at 2.
   2. Beginning at 2, the damper position is regulated over a throttling range by the damper until the user-defined minimum damper position is reached at 3.
   3. 3-4 indicates that, should the zone temperature continue to fall, the damper will hold the minimum damper position.

NOTE: The minimum damper position could be set to zero on any one zone. In this case, the damper will hold a fully closed position if the zone temperature continues to fall.

B. Electric reheat: When the primary air source is cooling, refer to numbers on flow diagram.
   1. As the zone temperature falls below the occupied heating set point, the Occupied Heating mode is in effect at 4.
   2. At .25 degrees below the set point, the terminal fan is energized. At 1.0 degrees demand the 1st stage of electric heat is energized. At 1.5 degrees the 2nd stage of electric heat is energized. At 2.0 degrees the 3rd stage on electric heat is energized.
   3. As the zone temperature rises to less than 0.5 degrees of heat demand, the stages of heat and the terminal fan will be deenergized.

C. Unoccupied time period: (cooling)
   When the unoccupied period is reached, the user-defined occupied cooling set point is reset upward to a user-defined unoccupied cooling set point. The damper will throttle in the same manner (as per A) during the unoccupied period, using the unoccupied cooling set point.

D. Unoccupied time period: (auxiliary heat)
   When the unoccupied period is reached, the user-defined occupied heating set point is reset downward to a user-defined unoccupied heating set point. The hot water valve and fan will operate as required to satisfy the heating load.

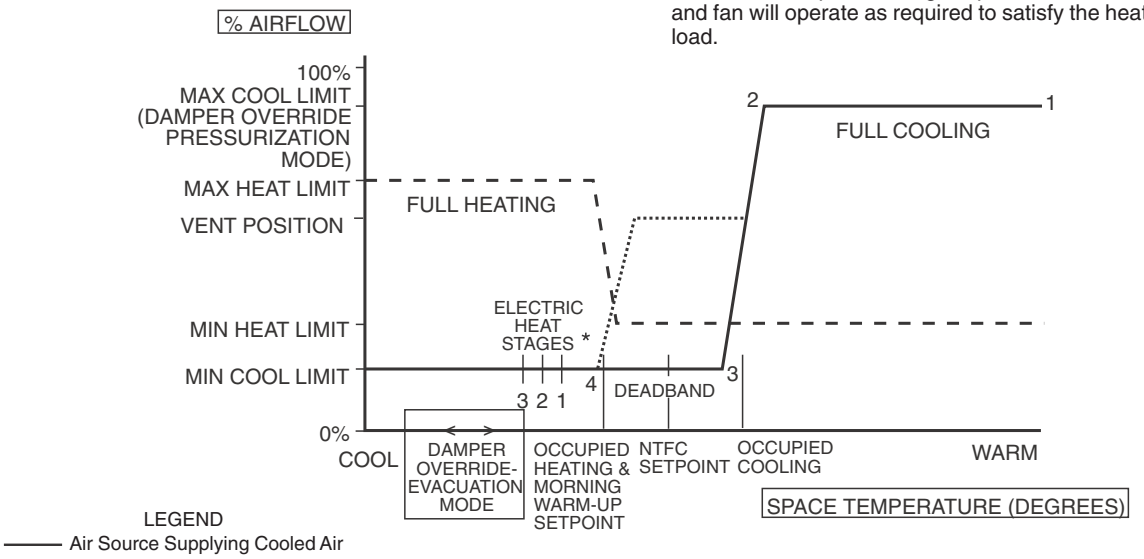

Figure 1 - Sequence of Operation for VVT, Cooling with Staged Electric Heat

PRODUCT INFORMATION IS SUBJECT TO CHANGE WITHOUT NOTICE. 11/30/2005

JOB NAME	JOB NUMBER	LOCATION	PAGE NUMBER	DRAWING NUMBER
BUYER	BUYER #	SHEET	1 OF 2	45M/N/R-V-8819

CODE / CATALOG #	Carrier — A United Technologies Company	THIS DOCUMENT IS THE PROPERTY OF CARRIER CORPORATION AND IS DELIVERED UPON THE EXPRESS CONDITION THAT THE CONTENTS WILL NOT BE DISCLOSED OR USED WITHOUT CARRIER CORPORATION'S WRITTEN CONSENT	SUBMISSION OF THESE DRAWINGS OR DOCUMENTS DOES NOT CONSTITUTE PART PERFORMANCE OR ACCEPTANCE OF CONTRACT	VARIABLE VOLUME, VARIABLE TEMPERATURE	45 MV,NV,RV

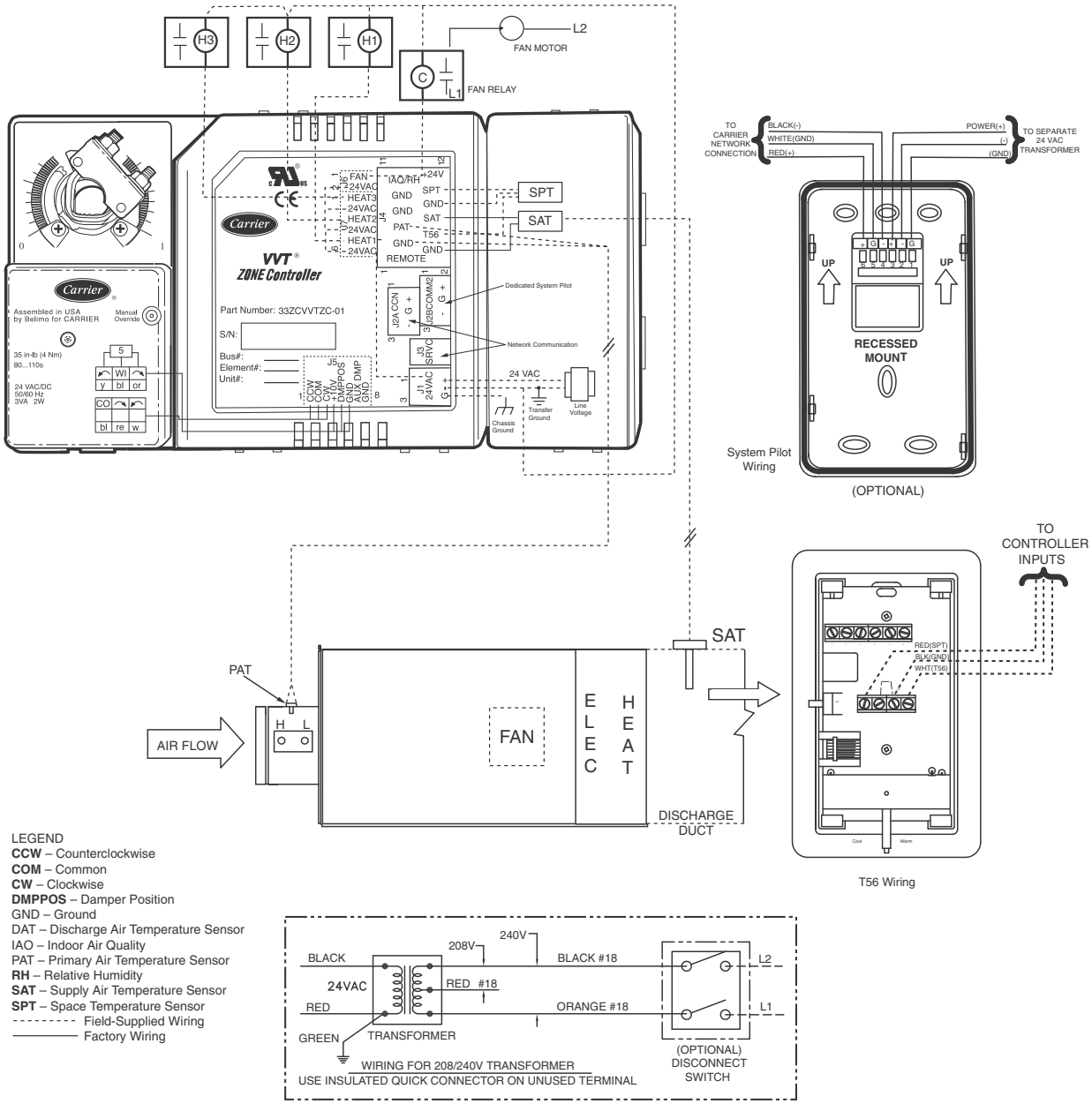

PRODUCT INFORMATION IS SUBJECT TO CHANGE WITHOUT NOTICE. 11/30/2005

JOB NAME	JOB NUMBER	LOCATION	PAGE NUMBER	DRAWING NUMBER
BUYER	BUYER #	SHEET	2 OF 2	45M/N/R-V-8819

CODE CATALOG #	Carrier A United Technologies Company	THIS DOCUMENT IS THE PROPERTY OF CARRIER CORPORATION AND IS DELIVERED UPON THE EXPRESS CONDITION THAT THE CONTENTS WILL NOT BE DISCLOSED OR USED WITHOUT CARRIER CORPORATION'S WRITTEN CONSENT	SUBMISSION OF THESE DRAWINGS OR DOCUMENTS DOES NOT CONSTITUTE PART PERFORMANCE OR ACCEPTANCE OF CONTRACT	VARIABLE VOLUME, VARIABLE TEMPERATURE	45 MV,NV,RV

VVT® PARALLEL (INTERMITTENT) FAN POWERED TERMINAL CONTROL WITH MODULATING HOT WATER HEAT

PRESSURE DEPENDENT

CARRIER CONTROL PACKAGE NO. 8820

Application:

Parallel fan powered terminals equipped with the above control package are designed to work with cooling only primary air source equipment and provide pressure dependent, variable volume, variable temperature (VVT) control when connected to a VVT zone thermostat. The intermittent terminal fan is used to pull in ceiling plenum air as the first stage of heat and provide sufficient airflow when the hydronic heat is energized. These systems allow a low minimum inlet static pressure, permitting the use of smaller, more energy efficient fan systems. Hot water reheat coils located at each terminal can additionally satisfy zone heating loads when the equipment is providing cooling. The minimum airflow set points can be set to zero. The fan provides airflow across the heat coil when the primary air source is off.

A wall-mounted thermostat located in each zone will sense load requirements and activate the control sequence to accommodate cooling or heating. Load requirements and sound level acceptability govern terminal sizing. This control package provides the following sequences of operations:

A. Cooling: When the primary air source is providing cooling (as detected by the primary air sensor), refer to numbers on flow diagram. See Fig. 1.
   1. 1-2 indicates that maximum airflow is established by the user-defined maximum damper position until the zone comes under control at 2.
   2. Beginning at 2, the airflow is regulated over a throttling range by the damper until the user-defined minimum damper position is reached at 3.
   3. 3-4 indicates that, should the zone temperature continue to fall, the damper will hold the minimum damper position.

NOTE: The minimum damper position could be set to zero on any one zone. In this case, the damper will hold a fully closed position if the zone temperature continues to fall.

B. Hot water reheat: When the primary air source is cooling, refer to numbers on flow diagram.
   1. As the zone temperature falls below the occupied heating set point, the Occupied Heating mode is in effect.
   2. Below the heating set point, the airflow is increased to the user-defined maximum heat limit. The terminal fan is energized. At this point the hot water valve modulates to maintain occupied heating setpoint.

NOTE: If hydronic heat is configured on and the system fan has not yet been energized the valve will be open for a period of time before the system fan will be commanded on to allow the coil to heat up before delivering conditioned air.

   3. As the zone temperature rises, the hot water valve modulates closed and the fan is deenergized.

C. Unoccupied time period: (cooling)
   When the unoccupied period is reached, the user-defined occupied cooling set point is reset upward to a user-defined unoccupied cooling set point. The damper will throttle in the same manner (as per A) during the unoccupied period, using the unoccupied cooling set point.

D. Unoccupied time period: (auxiliary heat)
   When the unoccupied period is reached, the user-defined occupied heating set point is reset downward to a user-defined unoccupied heating set point. The hot water valve and fan will operate as required to satisfy the heating load.

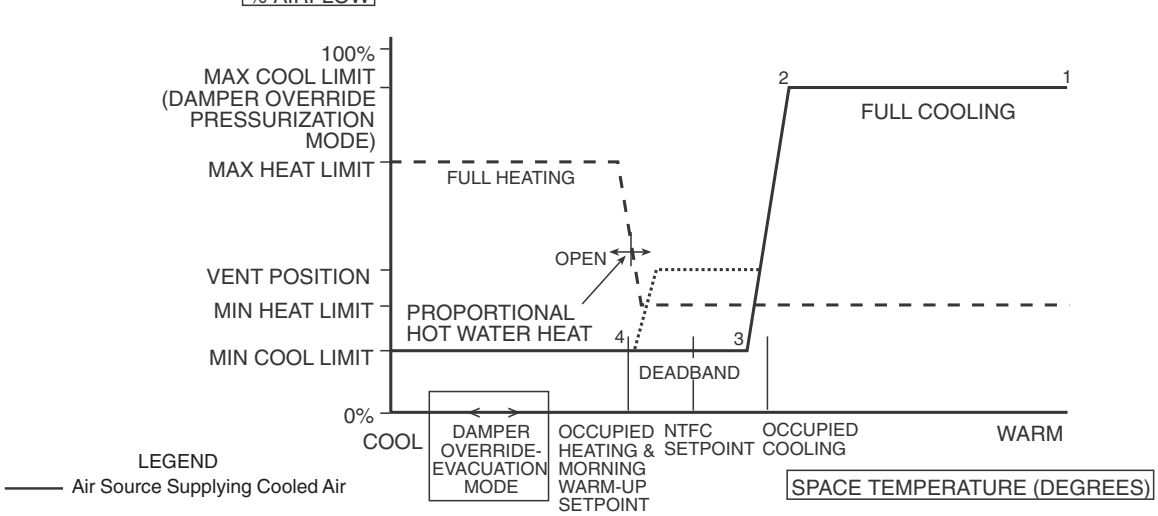

Figure 1 - Sequence of Operation for VVT, Cooling with Two-Position Hot Water Heat

PRODUCT INFORMATION IS SUBJECT TO CHANGE WITHOUT NOTICE. 02/14/2005

JOB NAME	JOB NUMBER	LOCATION	PAGE NUMBER	DRAWING NUMBER
BUYER	BUYER #	SHEET	1 OF 2	45M/N/R-V-8820

CODE	Carrier A United Technologies Company	THIS DOCUMENT IS THE PROPERTY OF CARRIER CORPORATION AND IS DELIVERED UPON THE EXPRESS CONDITION THAT THE CONTENTS WILL NOT BE DISCLOSED OR USED WITHOUT CARRIER CORPORATION'S WRITTEN CONSENT	SUBMISSION OF THESE DRAWINGS OR DOCUMENTS DOES NOT CONSTITUTE PART PERFORMANCE OR ACCEPTANCE OF CONTRACT	VARIABLE VOLUME, VARIABLE TEMPERATURE	45 MV,NV,RV
CATALOG #					

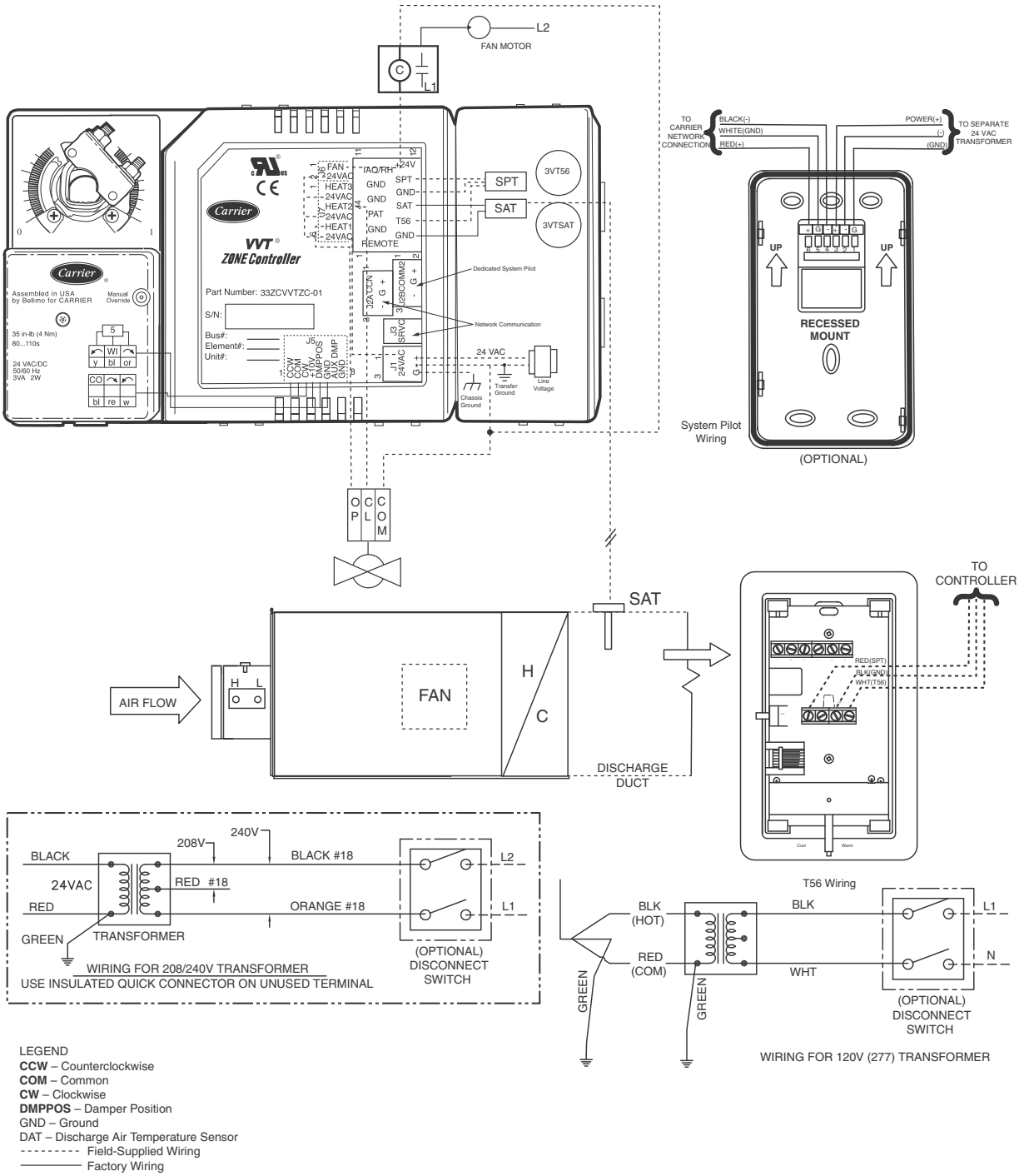

LEGEND
CCW – Counterclockwise
COM – Common
CW – Clockwise
DMPPOS – Damper Position
GND – Ground
DAT – Discharge Air Temperature Sensor
- - - - - - - - Field-Supplied Wiring
———— Factory Wiring

PRODUCT INFORMATION IS SUBJECT TO CHANGE WITHOUT NOTICE. 02/14/2005

JOB NAME	JOB NUMBER	LOCATION	PAGE NUMBER	DRAWING NUMBER
BUYER	BUYER #	SHEET	2 OF 2	45M/N/R-V-8820

CODE CATALOG #	Carrier A United Technologies Company	THIS DOCUMENT IS THE PROPERTY OF CARRIER CORPORATION AND IS DELIVERED UPON THE EXPRESS CONDITION THAT THE CONTENTS WILL NOT BE DISCLOSED OR USED WITHOUT CARRIER CORPORATION'S WRITTEN CONSENT.	SUBMISSION OF THESE DRAWINGS OR DOCUMENTS DOES NOT CONSTITUTE PART PERFORMANCE OR ACCEPTANCE OF CONTRACT.	VARIABLE VOLUME, VARIABLE TEMPERATURE	45 MV,NV, RV

3V™ VVT® PARALLEL (INTERMITTENT) FAN POWERED TERMINAL CONTROL WITH COMBINATION BASEBOARD AND DUCT ELECTRIC HEAT, PRESSURE DEPENDENT

CARRIER CONTROL PACKAGE NO. 8825

Application:

Parallel fan powered terminals equipped with the above control package are designed to work with cooling only primary air source equipment and provide pressure dependent, variable volume, variable temperature (VVT) control when connected to a VVT zone thermostat. The intermittent terminal fan is used to pull in ceiling plenum air as the first stage of heat and provide sufficient airflow when the electric heat is energized. These systems allow a low minimum inlet static pressure, permitting the use of smaller, more energy efficient fan systems. Two-stage electric reheat coils located at each terminal and baseboard heat can additionally satisfy zone heating loads when the equipment is providing cooling. The minimum airflow set point may be set to zero. The fan provides airflow across the heat coil when the primary air source is off.

A wall-mounted thermostat located in each zone will sense load requirements and activate the control sequence to accommodate cooling or heating. Load requirements and sound level acceptability govern terminal sizing. This control package provides the following sequences of operations:

A. Cooling:

When the primary air source is providing cooling (as detected by the primary air sensor), refer to numbers on flow diagram. See Fig. 1.

1. Between 1 and 2, maximum airflow is established by the user-defined maximum damper position until the zone comes under control at 2.
2. Beginning at 2, the airflow is regulated over a throttling range by the damper until the user-defined minimum damper position is reached at 3.
3. Between 3 and 4, should the zone temperature continue to fall, the damper will hold the minimum damper position.

NOTE: The minimum damper position could be set to zero on any one zone. In this case, the damper will hold a fully closed position if the zone temperature continues to fall.

B. Electric reheat:

When the primary air source is cooling, refer to numbers on flow diagram. See Fig. 1.

1. As the zone temperature falls below the occupied heating set point, the Occupied Heating mode is in effect at 4.
2. At 0.25 degrees below the heating set point, the terminal fan is energized. At 1.0 degrees demand, the first stage of electric heat is energized. At 1.5 degrees demand, the second stage of electric heat is energized. At 2.0 degrees demand, the baseboard heat is energized.
3. As the zone temperature rises to less than 0.5 degrees of demand, the stages of heat and fan are deenergized.

C. Unoccupied time period (cooling):

When the unoccupied period is reached, the user-defined occupied cooling set point is reset upward to a user-defined unoccupied cooling set point. The damper will throttle in the same manner (as per A) during the unoccupied period, using the unoccupied cooling set point.

D. Unoccupied time period (auxiliary heat):

When the unoccupied period is reached, the user-defined occupied heating set point is reset downward to a user-defined unoccupied heating set point. The electric heat and fan will operate as required to satisfy the heating load.

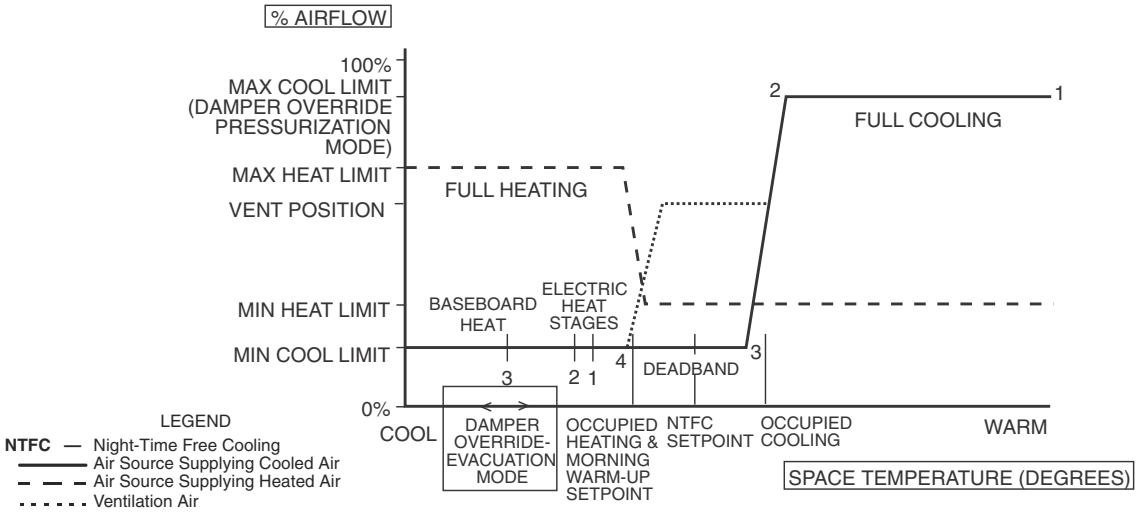

Figure 1 — Sequence of Operation for VVT, Cooling with Staged Electric and Baseboard Heat

PRODUCT INFORMATION IS SUBJECT TO CHANGE WITHOUT NOTICE. 01/15/2009

JOB NAME	JOB NUMBER	LOCATION	PAGE NUMBER	DRAWING NUMBER
BUYER	BUYER #	SHEET	1 OF 2	45M/N/R-V-8825

CODE CATALOG #	Carrier A United Technologies Company	THIS DOCUMENT IS THE PROPERTY OF CARRIER CORPORATION AND IS DELIVERED UPON THE EXPRESS CONDITION THAT THE CONTENTS WILL NOT BE DISCLOSED OR USED WITHOUT CARRIER CORPORATION'S WRITTEN CONSENT.	SUBMISSION OF THESE DRAWINGS OR DOCUMENTS DOES NOT CONSTITUTE PART PERFORMANCE OR ACCEPTANCE OF CONTRACT.	VARIABLE VOLUME, VARIABLE TEMPERATURE	45 MV,NV, RV

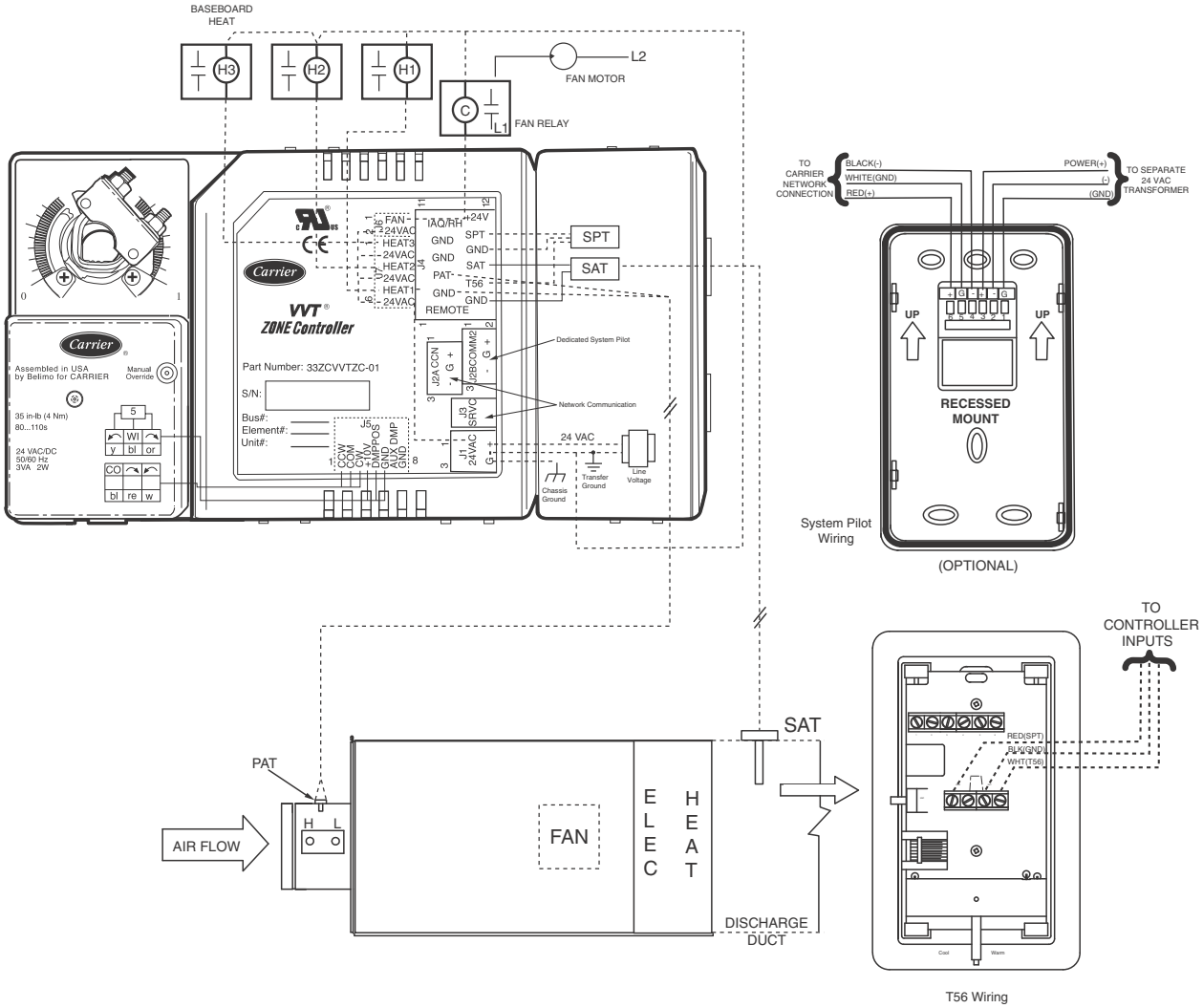

LEGEND

AUX DMP	—	Auxiliary Damper
C	—	Contactor
CCW	—	Counterclockwise
COM	—	Common
CW	—	Clockwise
DMPPOS	—	Damper Position
GND	—	Ground
IAQ/RH	—	Indoor Air Quality/Relative Humidity
PAT	—	Primary Air Temperature Sensor
SAT	—	Supply Air Temperature Sensor
SPT	—	Space Temperature Sensor
- - - -		Field-Supplied Wiring
———		Factory Wiring

PRODUCT INFORMATION IS SUBJECT TO CHANGE WITHOUT NOTICE. 01/15/2009

JOB NAME	JOB NUMBER	LOCATION	PAGE NUMBER	DRAWING NUMBER
BUYER	BUYER #	SHEET	2 OF 2	45M/N/R-V-8825

CODE CATALOG #	Carrier A United Technologies Company	THIS DOCUMENT IS THE PROPERTY OF CARRIER CORPORATION AND IS DELIVERED UPON THE EXPRESS CONDITION THAT THE CONTENTS WILL NOT BE DISCLOSED OR USED WITHOUT CARRIER CORPORATION'S WRITTEN CONSENT.	SUBMISSION OF THESE DRAWINGS OR DOCUMENTS DOES NOT CONSTITUTE PART PERFORMANCE OR ACCEPTANCE OF CONTRACT.	VARIABLE VOLUME VARIABLE TEMPERATURE	45 MV,NV,RV

3V™ VVT® INTERMITTENT FAN POWERED TERMINAL UNIT CONTROL CARRIER CONTROL PACKAGE NO. 8829

Cooling with 3-Stage Field-Installed Electric Heat

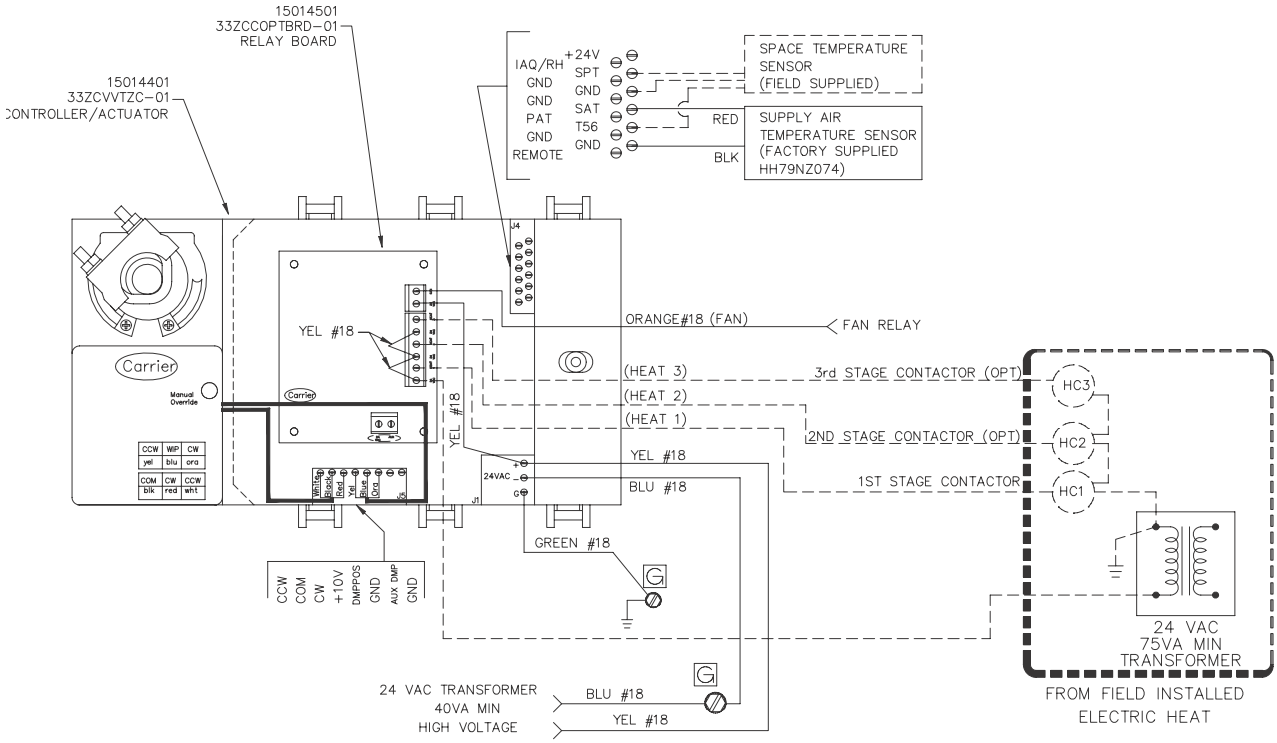

NOTES:
1. These controls have been wired to comply with UL-1995.
2. Use insulated quick connects.
3. Disconnect unit prior to servicing. Electric shock may result.
4. Verify actuator bushing is in the full clockwise position. Rotate damper clockwise to the fully closed position. Mount actuator over damper shaft and secure to shaft enclosure. Engage clutch and rotate damper counterclockwise to the fully open position.

FACTORY PIPING
FIELD WIRING
FACTORY WIRING

PRODUCT INFORMATION IS SUBJECT TO CHANGE WITHOUT NOTICE. 02/15/2009

JOB NAME	JOB NUMBER	LOCATION	PAGE NUMBER	DRAWING NUMBER
BUYER	BUYER #	SHEET	1 OF 1	45M/N/R-V-8829

CODE CATALOG #	Carrier A United Technologies Company	THIS DOCUMENT IS THE PROPERTY OF CARRIER CORPORATION AND IS DELIVERED UPON THE EXPRESS CONDITION THAT THE CONTENTS WILL NOT BE DISCLOSED OR USED WITHOUT CARRIER CORPORATION'S WRITTEN CONSENT.	SUBMISSION OF THESE DRAWINGS OR DOCUMENTS DOES NOT CONSTITUTE PART PERFORMANCE OR ACCEPTANCE OF CONTRACT.	VARIABLE VOLUME, VARIABLE TEMPERATURE	45 MV,NV, RV

VVT® PARALLEL (INTERMITTENT) FAN POWERED TERMINAL CONTROL WITH PROPORTIONAL SOLID-STATE RELAY (SSR) ELECTRIC HEAT

PRESSURE DEPENDENT

CARRIER CONTROL PACKAGE NO. 8830

Application:

Parallel fan powered terminals equipped with the above control package are designed to work with cooling only primary air source equipment and provide pressure dependent, variable volume, variable temperature (VVT) control when connected to a VVT zone thermostat. The intermittent terminal fan is used to pull in ceiling plenum air as the first stage of heat and provide sufficient airflow when the electric heat is operating. These systems allow a low minimum inlet static pressure, permitting the use of smaller, more energy efficient fan systems. Electric heat coils located at each terminal can additionally satisfy zone heating loads when the equipment is providing cooling. The minimum airflow set points can be set to zero. The fan provides airflow across the heat coil when the primary air source is off.

A wall-mounted thermostat located in each zone will sense load requirements and activate the control sequence to accommodate cooling or heating. Load requirements and sound level acceptability govern terminal sizing. This control package provides the following sequences of operations:

A. Cooling:

When the primary air source is providing cooling (as detected by the primary air sensor), refer to numbers on flow diagram. See Fig. 1.

1. Between 1 and 2, maximum airflow is established by the user-defined maximum damper position until the zone comes under control at 2.
2. Beginning at 2, the airflow is regulated over a throttling range by the damper until the user-defined minimum damper position is reached at 3.
3. Between 3 and 4, should the zone temperature continue to fall, the damper will hold the minimum damper position.

NOTE: The minimum damper position could be set to zero on any one zone. In this case, the damper will hold a fully closed position if the zone temperature continues to fall.

B. Electric heat:

When the primary air source is cooling, refer to numbers on flow diagram.

1. As the zone temperature falls below the occupied heating set point, the Occupied Heating mode is in effect at 4.
2. Below the heating set point, the airflow is maintained at the user-defined minimum cool limit. The terminal fan is energized. Between 4 and 5, the proportional electric heat modulates to maintain occupied heating setpoint.
3. As the zone temperature rises, the proportional electric heater output is reduced to zero and the fan is deenergized.

C. Unoccupied time period (cooling):

When the unoccupied period is reached, the user-defined occupied cooling set point is reset upward to a user-defined unoccupied cooling set point. The damper will throttle in the same manner (as per A) during the unoccupied period, using the unoccupied cooling set point.

D. Unoccupied time period (auxiliary heat):

When the unoccupied period is reached, the user-defined occupied heating set point is reset downward to a user-defined unoccupied heating set point. The proportional electric heat and fan will operate as required to satisfy the heating load.

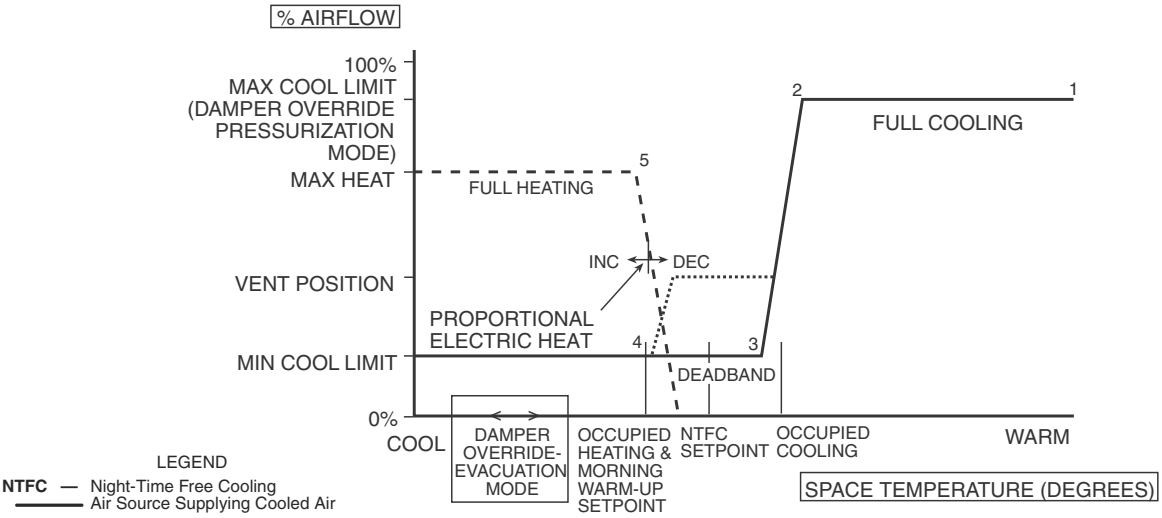

Figure 1 — Sequence of Operation for VVT, Cooling with Proportional Electric Heat

PRODUCT INFORMATION IS SUBJECT TO CHANGE WITHOUT NOTICE. 06/15/2007

JOB NAME	JOB NUMBER	LOCATION	PAGE NUMBER	DRAWING NUMBER
BUYER	BUYER #	SHEET	1 OF 2	45M/N/R-V-8830

CODE / CATALOG #	Carrier — A United Technologies Company	THIS DOCUMENT IS THE PROPERTY OF CARRIER CORPORATION AND IS DELIVERED UPON THE EXPRESS CONDITION THAT THE CONTENTS WILL NOT BE DISCLOSED OR USED WITHOUT CARRIER CORPORATION'S WRITTEN CONSENT.	SUBMISSION OF THESE DRAWINGS OR DOCUMENTS DOES NOT CONSTITUTE PART PERFORMANCE OR ACCEPTANCE OF CONTRACT.	VARIABLE VOLUME, VARIABLE TEMPERATURE	45 MV,NV, RV

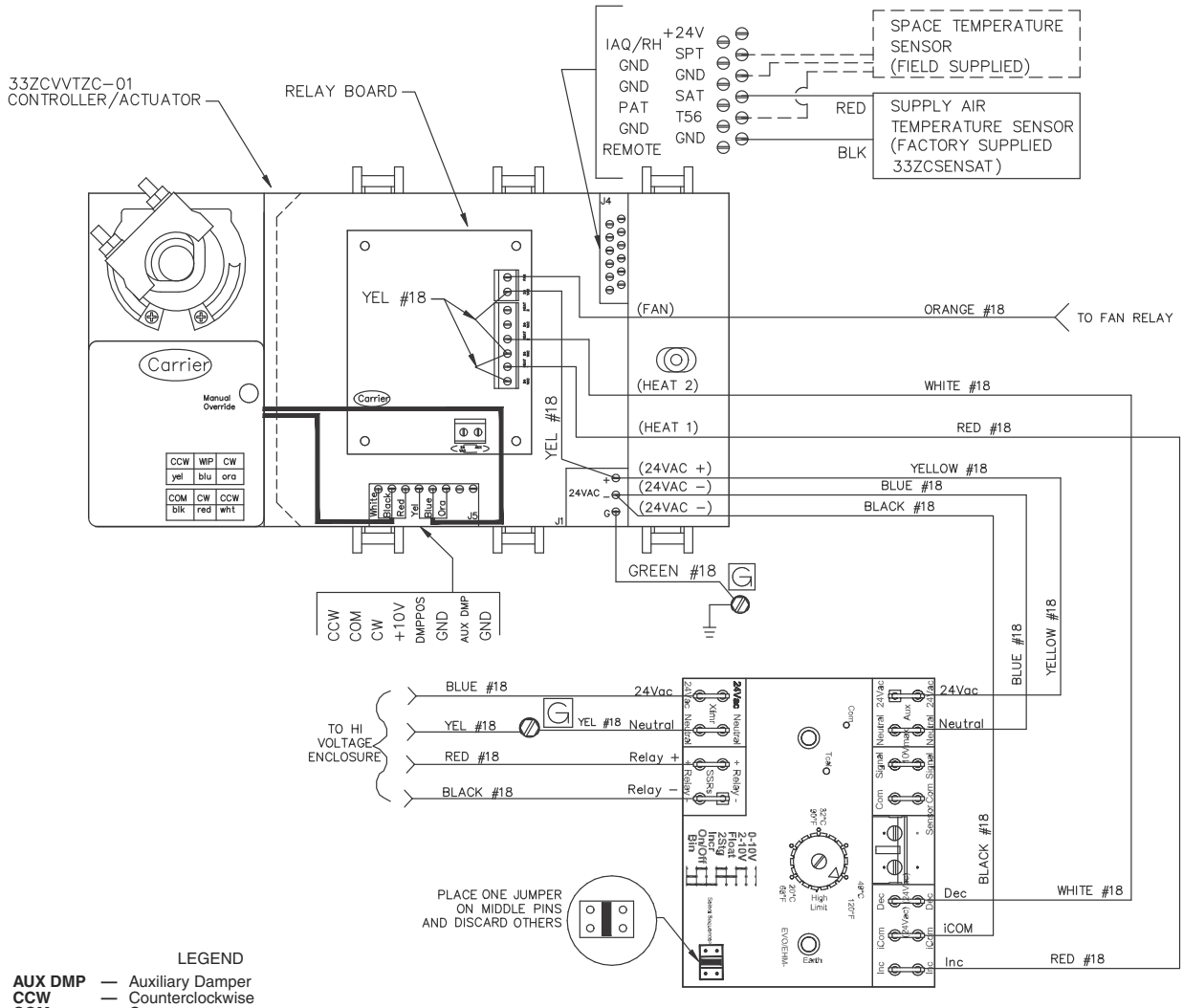

LEGEND

AUX DMP — Auxiliary Damper
CCW — Counterclockwise
COM — Common
CW — Clockwise
DMPPOS — Damper Position
GND — Ground
IAQ/RH — Indoor Air Quality/Relative Humidity
PAT — Primary Air Temperature Sensor
– – – – Field-Supplied Wiring
——— Factory Wiring

PRODUCT INFORMATION IS SUBJECT TO CHANGE WITHOUT NOTICE. 06/15/2007

JOB NAME	JOB NUMBER	LOCATION	PAGE NUMBER	DRAWING NUMBER
BUYER	BUYER #	SHEET	2 OF 2	45M/N/R-V-8830

CODE CATALOG #	Carrier A United Technologies Company	THIS DOCUMENT IS THE PROPERTY OF CARRIER CORPORATION AND IS DELIVERED UPON THE EXPRESS CONDITION THAT THE CONTENTS WILL NOT BE DISCLOSED OR USED WITHOUT CARRIER CORPORATION'S WRITTEN CONSENT.	SUBMISSION OF THESE DRAWINGS OR DOCUMENTS DOES NOT CONSTITUTE PART PERFORMANCE OR ACCEPTANCE OF CONTRACT.	VARIABLE VOLUME, VARIABLE TEMPERATURE	45 MB,NB, RB

BACnet VVT® PARALLEL (INTERMITTENT) FAN POWERED TERMINAL CONTROL WITHOUT HEAT, PRESSURE DEPENDENT

CARRIER CONTROL PACKAGE NO. 8855

Application:

Parallel fan powered terminals equipped with the above control package are designed to work with cooling only primary air source equipment and provide pressure dependent, variable volume, variable temperature (VVT) control when connected to a VVT zone thermostat. The intermittent terminal fan is used to pull in ceiling plenum air to provide heat to the zone. These systems allow a low minimum inlet static pressure, permitting the use of smaller, more energy efficient fan systems. The minimum airflow set point may be set to zero. The fan provides airflow to the zone when the primary air source is off.

A wall-mounted thermostat located in each zone will sense load requirements and activate the control sequence to accommodate cooling or heating. Load requirements and sound level acceptability govern terminal sizing. This control package provides the following sequences of operations:

A. Cooling:

When the primary air source is providing cooling (as detected by the primary air sensor), refer to numbers on flow diagram. See Fig. 1.

1. Between 1 and 2, maximum airflow is established by the user-defined maximum damper position until the zone comes under control at 2.
2. Beginning at 2, the airflow is regulated over a throttling range by the damper until the user-defined minimum damper position is reached at 3.
3. Between 3 and 4, should the zone temperature continue to fall, the damper will hold the minimum damper position.

NOTE: The minimum damper position could be set to zero on any one zone. In this case, the damper will hold a fully closed position if the zone temperature continues to fall.

B. Induced warm plenum air reheat:

When the primary air source is cooling, refer to numbers on flow diagram. See Fig. 1.

1. As the zone temperature falls below the occupied heating set point, the Occupied Heating mode is in effect at 4'.
2. At 1.5 degrees demand, the airflow is increased to the user-defined supplemental damper position. The terminal fan is energized to induce heated plenum air to warm the zone.
3. As the zone temperature rises to less than 0.5 degrees of demand, the fan is deenergized.

C. Unoccupied time period (cooling):

When the unoccupied period is reached, the user-defined occupied cooling set point is reset upward to a user-defined unoccupied cooling set point. The damper will throttle in the same manner (as per A) during the unoccupied period, using the unoccupied cooling set point.

D. Unoccupied time period (induced plenum air heat):

When the unoccupied period is reached, the user-defined occupied heating set point is reset downward to a user-defined unoccupied heating set point. The fan will operate as required to satisfy the heating load.

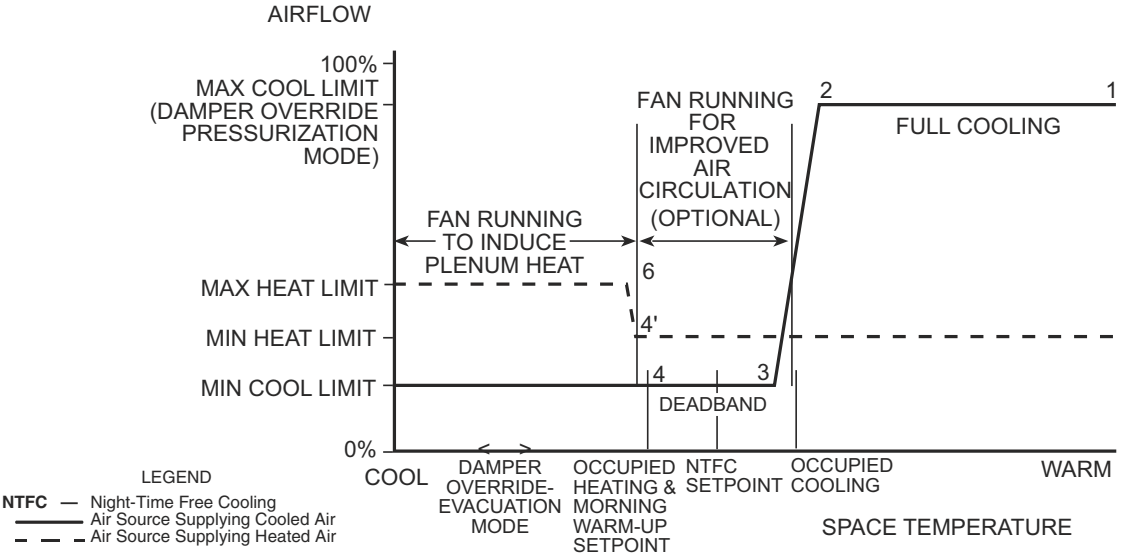

Figure 1 — Sequence of Operation for VVT, Intermittent Fan Powered Air Terminal without Heat

PRODUCT INFORMATION IS SUBJECT TO CHANGE WITHOUT NOTICE. 06/15/2010

JOB NAME	JOB NUMBER	LOCATION	PAGE NUMBER	DRAWING NUMBER
BUYER	BUYER #	SHEET	1 OF 2	45M/N/R-B-8855

CODE	Carrier — A United Technologies Company	THIS DOCUMENT IS THE PROPERTY OF CARRIER CORPORATION AND IS DELIVERED UPON THE EXPRESS CONDITION THAT THE CONTENTS WILL NOT BE DISCLOSED OR USED WITHOUT CARRIER CORPORATION'S WRITTEN CONSENT.	SUBMISSION OF THESE DRAWINGS OR DOCUMENTS DOES NOT CONSTITUTE PART PERFORMANCE OR ACCEPTANCE OF CONTRACT.	VARIABLE VOLUME, VARIABLE TEMPERATURE	45 MB,NB, RB
CATALOG #					

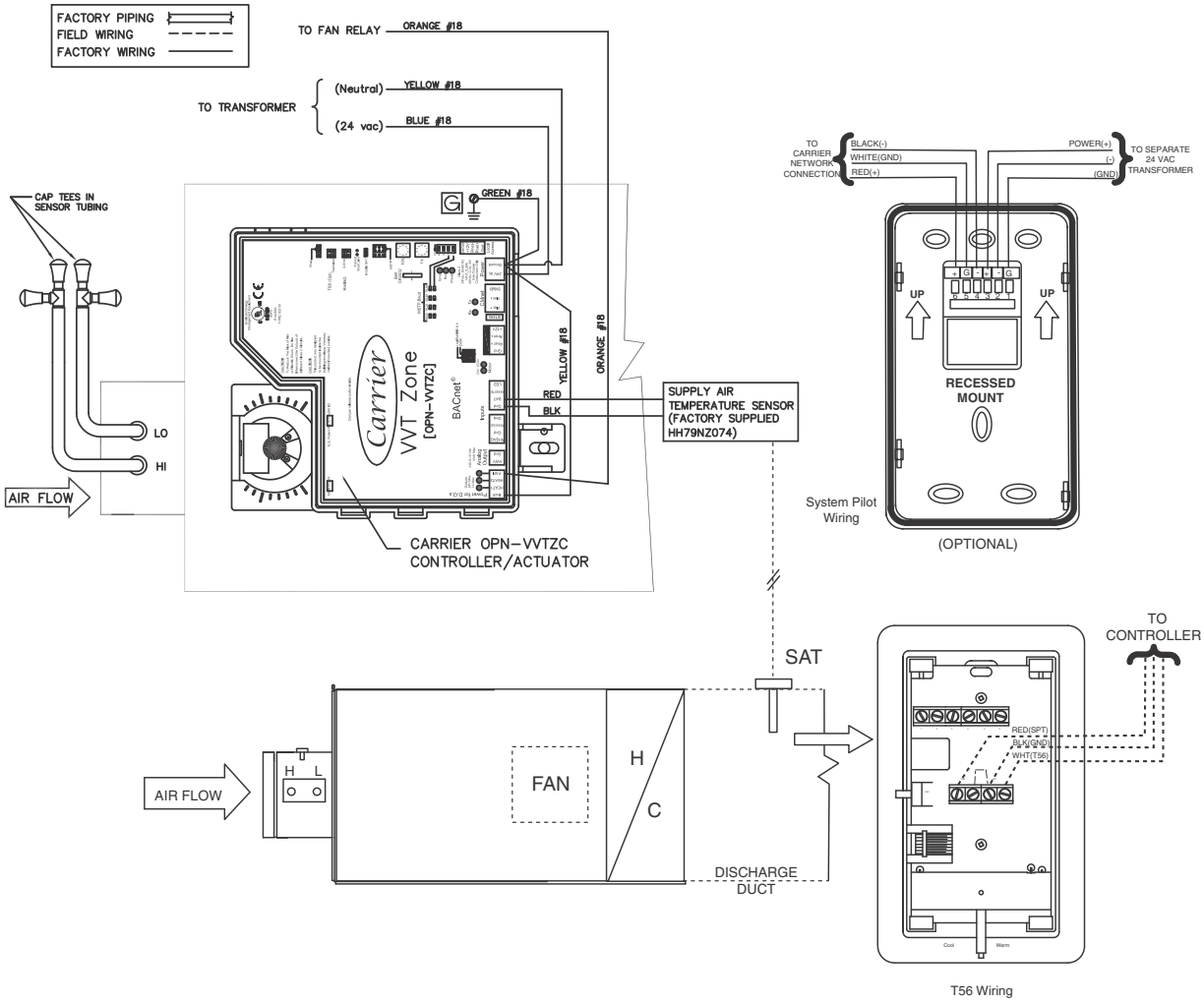

LEGEND

AUX DMP	—	Auxiliary Damper
C	—	Contactor
CCW	—	Counterclockwise
COM	—	Common
CW	—	Clockwise
DMPPOS	—	Damper Position
GND	—	Ground
IAQ/RH	—	Indoor Air Quality/Relative Humidity
PAT	—	Primary Air Temperature Sensor
SAT	—	Supply Air Temperature Sensor
SPT	—	Space Temperature Sensor
- - - -		Field-Supplied Wiring
———		Factory Wiring

PRODUCT INFORMATION IS SUBJECT TO CHANGE WITHOUT NOTICE. 06/15/2010

JOB NAME	JOB NUMBER	LOCATION	PAGE NUMBER	DRAWING NUMBER
BUYER	BUYER #	SHEET	2 OF 2	45M/N/R-B-8855

CODE CATALOG #	Carrier A United Technologies Company	THIS DOCUMENT IS THE PROPERTY OF CARRIER CORPORATION AND IS DELIVERED UPON THE EXPRESS CONDITION THAT THE CONTENTS WILL NOT BE DISCLOSED OR USED WITHOUT CARRIER CORPORATION'S WRITTEN CONSENT	SUBMISSION OF THESE DRAWINGS OR DOCUMENTS DOES NOT CONSTITUTE PART PERFORMANCE OR ACCEPTANCE OF CONTRACT	VARIABLE VOLUME, VARIABLE TEMPERATURE	45 MB,NB,RB

BACnet VVT ® PARALLEL (INTERMITTENT) FAN POWERED TERMINAL CONTROL WITH ON/OFF HOT WATER HEAT
PRESSURE DEPENDENT
CARRIER CONTROL PACKAGE NO. 8858

Application:

Parallel fan powered terminals equipped with the above control package are designed to work with cooling only primary air source equipment and provide pressure dependent, variable volume, variable temperature (VVT) control when connected to a VVT zone thermostat. The intermittent terminal fan is used to pull in ceiling plenum air as the first stage of heat and provide sufficient airflow when the hydronic heat is energized. These systems allow a low minimum inlet static pressure, permitting the use of smaller, more energy efficient fan systems. Hot water reheat coils located at each terminal can additionally satisfy zone heating loads when the equipment is providing cooling. The minimum airflow set points can be set to zero. The fan provides airflow across the heat coil when the primary air source is off.

A wall-mounted thermostat located in each zone will sense load requirements and activate the control sequence to accommodate cooling or heating. Load requirements and sound level acceptability govern terminal sizing. This control package provides the following sequences of operations:

A. Cooling: When the primary air source is providing cooling (as detected by the primary air sensor), refer to numbers on flow diagram. See Fig. 1.
   1. 1-2 indicates that maximum airflow is established by the user-defined maximum damper position until the zone comes under control at 2.
   2. Beginning at 2, the airflow is regulated over a throttling range by the damper until the user-defined minimum damper position is reached at 3.
   3. 3-4 indicates that, should the zone temperature continue to fall, the damper will hold the minimum damper position.

NOTE: The minimum damper position could be set to zero on any one zone. In this case, the damper will hold a fully closed position if the zone temperature continues to fall.

B. Hot water reheat: When the primary air source is cooling, refer to numbers on flow diagram.
   1. As the zone temperature falls below the occupied heating set point, the Occupied Heating mode is in effect at 4.
   2. At 1.5 degrees below the set point, the airflow is increased to the user-defined supplemental damper position. The terminal fan is energized. At 2.0 degrees demand the hot water valve opens.

NOTE: If hydronic heat is configured on and the system fan has not yet been energized the valve will be open for a period of time before the system fan will be commanded on to allow the coil to heat up before delivering conditioned air.

   3. As the zone temperature rises, the hot water valve closes and the fan is deenergized.

C. Unoccupied time period: (cooling)
   When the unoccupied period is reached, the user-defined occupied cooling set point is reset upward to a user-defined unoccupied cooling set point. The damper will throttle in the same manner (as per A) during the unoccupied period, using the unoccupied cooling set point.

D. Unoccupied time period: (auxiliary heat)
   When the unoccupied period is reached, the user-defined occupied heating set point is reset downward to a user-defined unoccupied heating set point. The hot water valve and fan will operate as required to satisfy the heating load.

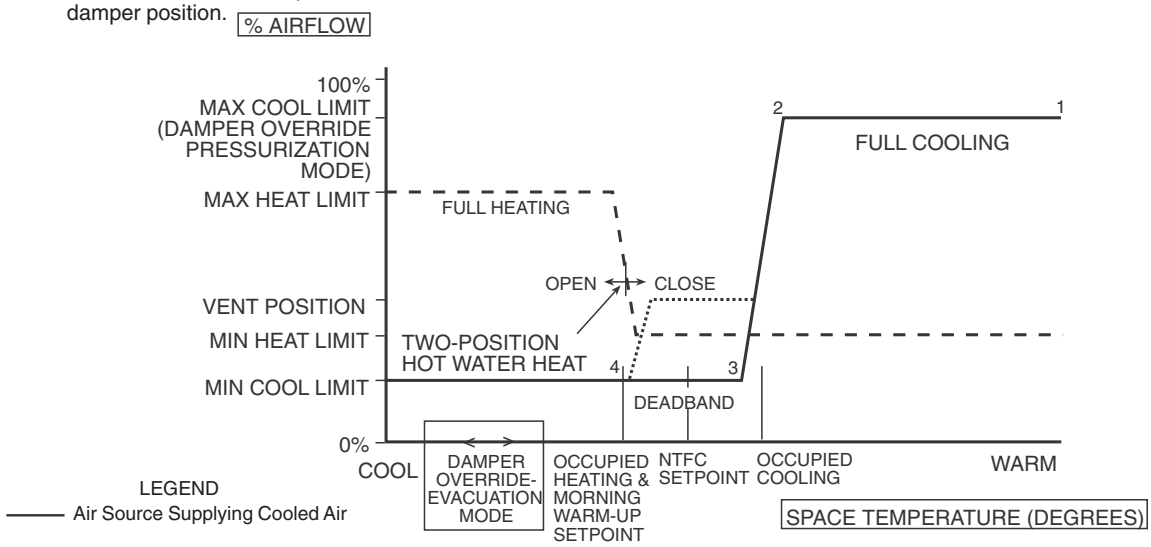

Figure 1 - Sequence of Operation for VVT, Cooling with Two-Position Hot Water Heat

PRODUCT INFORMATION IS SUBJECT TO CHANGE WITHOUT NOTICE. 06/15/2010

JOB NAME	JOB NUMBER	LOCATION	PAGE NUMBER	DRAWING NUMBER
BUYER	BUYER #	SHEET	1 OF 2	45M/N/R-B-8858

CODE	Carrier A United Technologies Company	THIS DOCUMENT IS THE PROPERTY OF CARRIER CORPORATION AND IS DELIVERED UPON THE EXPRESS CONDITION THAT THE CONTENTS WILL NOT BE DISCLOSED OR USED WITHOUT CARRIER CORPORATION'S WRITTEN CONSENT	SUBMISSION OF THESE DRAWINGS OR DOCUMENTS DOES NOT CONSTITUTE PART PERFORMANCE OR ACCEPTANCE OF CONTRACT	VARIABLE VOLUME, VARIABLE TEMPERATURE	45 MB,NB,RB
CATALOG #					

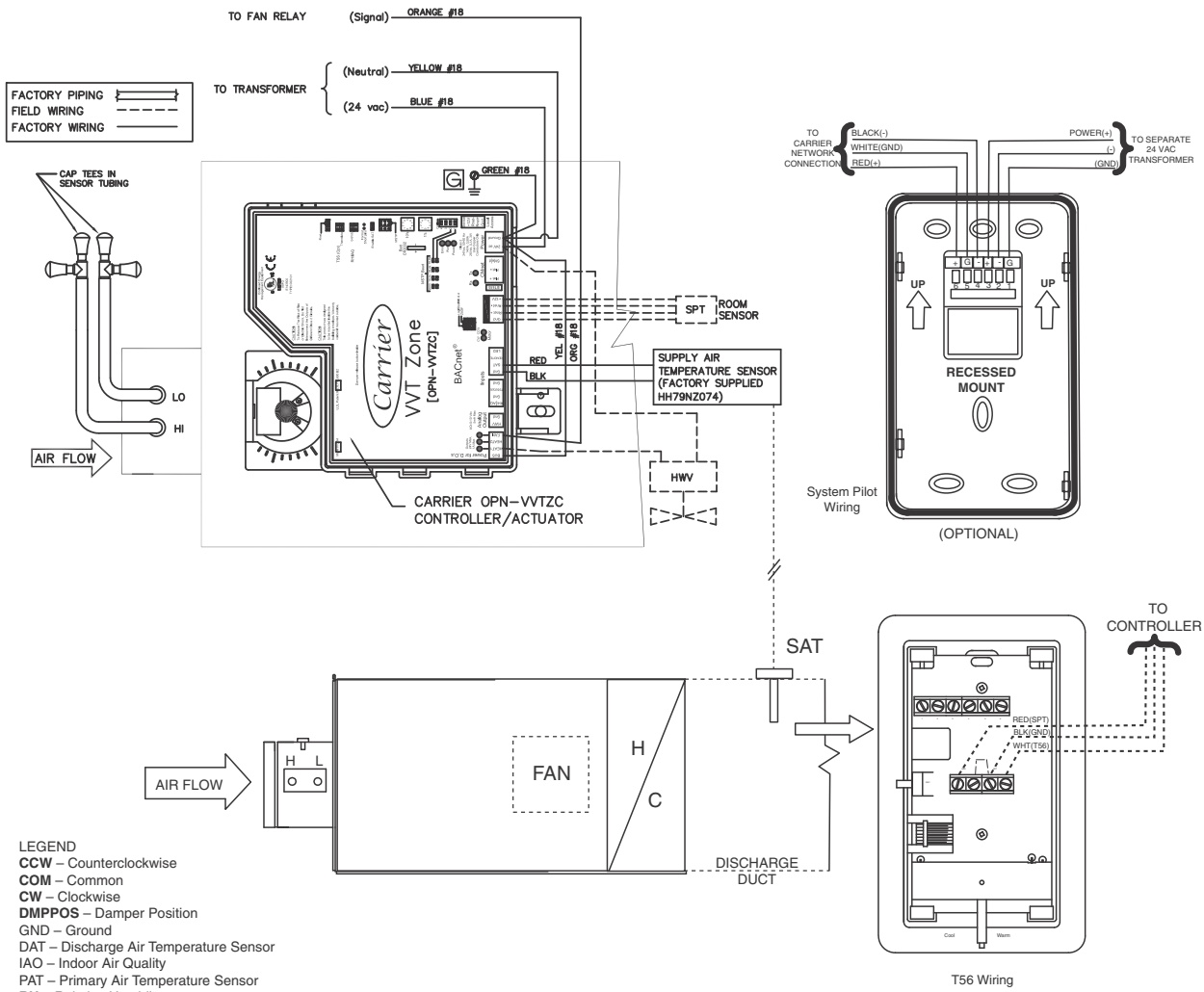

LEGEND
CCW – Counterclockwise
COM – Common
CW – Clockwise
DMPPOS – Damper Position
GND – Ground
DAT – Discharge Air Temperature Sensor
IAO – Indoor Air Quality
PAT – Primary Air Temperature Sensor
RH – Relative Humidity
SAT – Supply Air Temperature Sensor
SPT – Space Temperature Sensor
- - - - - - - - Field-Supplied Wiring
———— Factory Wiring

PRODUCT INFORMATION IS SUBJECT TO CHANGE WITHOUT NOTICE. 06/15/2010

JOB NAME	JOB NUMBER	LOCATION	PAGE NUMBER	DRAWING NUMBER
BUYER	BUYER #	SHEET	2 OF 2	45M/N/R-B-8858

CODE CATALOG #	Carrier A United Technologies Company	THIS DOCUMENT IS THE PROPERTY OF CARRIER CORPORATION AND IS DELIVERED UPON THE EXPRESS CONDITION THAT THE CONTENTS WILL NOT BE DISCLOSED OR USED WITHOUT CARRIER CORPORATION'S WRITTEN CONSENT	SUBMISSION OF THESE DRAWINGS OR DOCUMENTS DOES NOT CONSTITUTE PART PERFORMANCE OR ACCEPTANCE OF CONTRACT	VARIABLE VOLUME, VARIABLE TEMPERATURE	45 MB,NB,RB

BACnet VVT® PARALLEL (INTERMITTENT) FAN TERMINAL CONTROL WITH UP TO 2 STAGES OF ELECTRIC HEAT

PRESSURE DEPENDENT

CARRIER CONTROL PACKAGE NO. 8859

Application:

Parallel fan powered terminals equipped with the above control package are designed to work with cooling only primary air source equipment and to provide pressure dependent, variable volume, variable temperature (VVT) control when connected to a VVT zone thermostat. The intermittent terminal fan is used to pull in ceiling plenum air as the first stage of heat and provide sufficient airflow when the hydronic heat is energized. These systems allow a low minimum inlet static pressure, permitting the use of smaller, more energy efficient fan systems. Three-stage electric reheat coils located at each terminal can additionally satisfy zone heating loads when the equipment is providing cooling. The minimum airflow set point may be set to zero. The fan provides airflow across the heat coil when the primary air source is off.

A wall-mounted thermostat located in each zone will sense load requirements and activate the control sequence to accommodate cooling or heating. Load requirements and sound level acceptability govern terminal sizing. This control package provides the following sequences of operations:

A. Cooling: When the primary air source is providing cooling (as detected by the primary air sensor), refer to numbers on flow diagram. See Fig. 1.
   1. 1-2 indicates that maximum airflow is established by the user-defined maximum damper position until the zone comes under control at 2.
   2. Beginning at 2, the damper position is regulated over a throttling range by the damper until the user-defined minimum damper position is reached at 3.
   3. 3-4 indicates that, should the zone temperature continue to fall, the damper will hold the minimum damper position.

NOTE: The minimum damper position could be set to zero on any one zone. In this case, the damper will hold a fully closed position if the zone temperature continues to fall.

B. Electric reheat: When the primary air source is cooling, refer to numbers on flow diagram.
   1. As the zone temperature falls below the occupied heating set point, the Occupied Heating mode is in effect at 4.
   2. At .25 degrees below the set point, the terminal fan is energized. At 1.0 degrees demand the 1st stage of electric heat is energized. At 1.5 degrees the 2nd stage of electric heat is energized.
   3. As the zone temperature rises to less than 0.5 degrees of heat demand, the stages of heat and the terminal fan will be deenergized.

C. Unoccupied time period: (cooling)
   When the unoccupied period is reached, the user-defined occupied cooling set point is reset upward to a user-defined unoccupied cooling set point. The damper will throttle in the same manner (as per A) during the unoccupied period, using the unoccupied cooling set point.

D. Unoccupied time period: (auxiliary heat)
   When the unoccupied period is reached, the user-defined occupied heating set point is reset downward to a user-defined unoccupied heating set point. The hot water valve and fan will operate as required to satisfy the heating load.

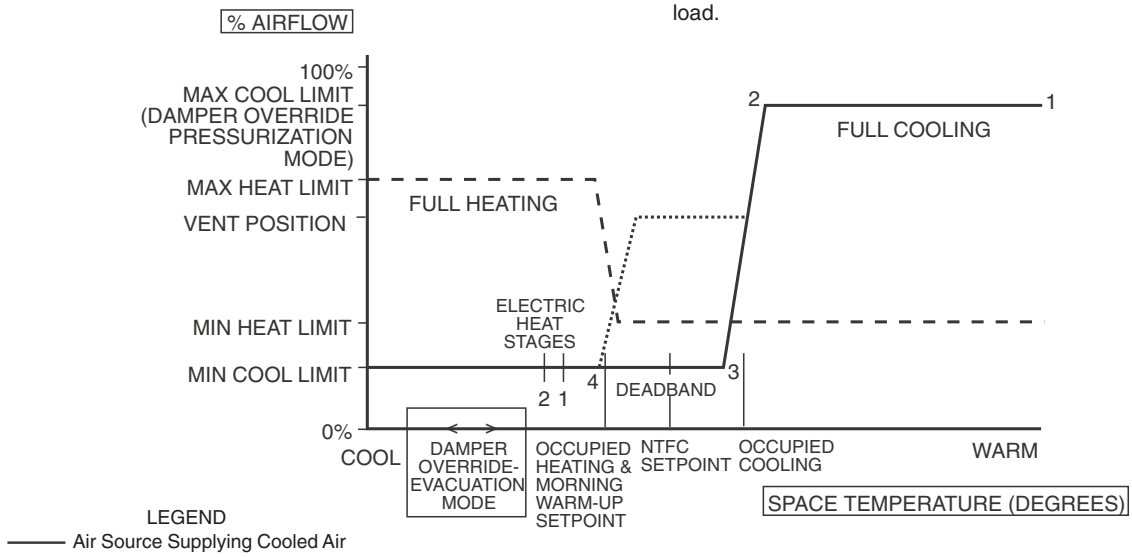

Figure 1 - Sequence of Operation for VVT, Cooling with Staged Electric Heat

PRODUCT INFORMATION IS SUBJECT TO CHANGE WITHOUT NOTICE. 06/15/2010

JOB NAME	JOB NUMBER	LOCATION	PAGE NUMBER	DRAWING NUMBER
BUYER	BUYER #	SHEET	1 OF 2	45M/N/R-B-8859

CODE	Carrier A United Technologies Company	THIS DOCUMENT IS THE PROPERTY OF CARRIER CORPORATION AND IS DELIVERED UPON THE EXPRESS CONDITION THAT THE CONTENTS WILL NOT BE DISCLOSED OR USED WITHOUT CARRIER CORPORATION'S WRITTEN CONSENT	SUBMISSION OF THESE DRAWINGS OR DOCUMENTS DOES NOT CONSTITUTE PART PERFORMANCE OR ACCEPTANCE OF CONTRACT	VARIABLE VOLUME, VARIABLE TEMPERATURE	45 MB,NB,RB
CATALOG #					

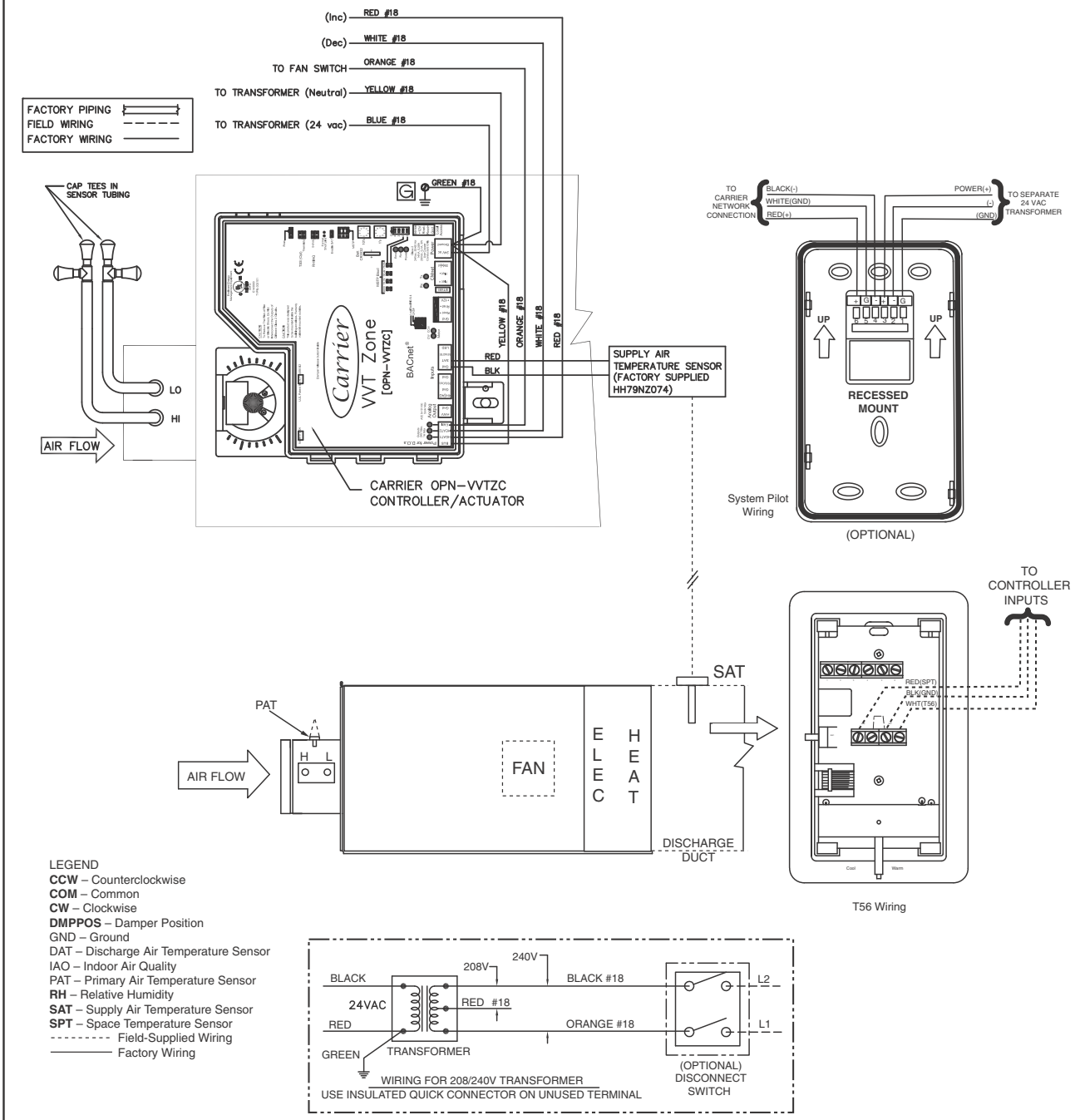

LEGEND
CCW – Counterclockwise
COM – Common
CW – Clockwise
DMPPOS – Damper Position
GND – Ground
DAT – Discharge Air Temperature Sensor
IAO – Indoor Air Quality
PAT – Primary Air Temperature Sensor
RH – Relative Humidity
SAT – Supply Air Temperature Sensor
SPT – Space Temperature Sensor
- - - - - - - - Field-Supplied Wiring
———— Factory Wiring

PRODUCT INFORMATION IS SUBJECT TO CHANGE WITHOUT NOTICE. 06/15/2010

JOB NAME	JOB NUMBER	LOCATION	PAGE NUMBER	DRAWING NUMBER
BUYER	BUYER #	SHEET	2 OF 2	45M/N/R-B-8859

CODE CATALOG #	Carrier A United Technologies Company	THIS DOCUMENT IS THE PROPERTY OF CARRIER CORPORATION AND IS DELIVERED UPON THE EXPRESS CONDITION THAT THE CONTENTS WILL NOT BE DISCLOSED OR USED WITHOUT CARRIER CORPORATION'S WRITTEN CONSENT	SUBMISSION OF THESE DRAWINGS OR DOCUMENTS DOES NOT CONSTITUTE PART PERFORMANCE OR ACCEPTANCE OF CONTRACT	VARIABLE VOLUME, VARIABLE TEMPERATURE	45 MB,NB,RB

BACnet VVT® PARALLEL (INTERMITTENT) FAN POWERED TERMINAL CONTROL WITH PROPORTIONAL HOT WATER HEAT

PRESSURE DEPENDENT

CARRIER CONTROL PACKAGE NO. 8860

Application:

Parallel fan powered terminals equipped with the above control package are designed to work with cooling only primary air source equipment and provide pressure dependent, variable volume, variable temperature (VVT) control when connected to a VVT zone thermostat. The intermittent terminal fan is used to pull in ceiling plenum air as the first stage of heat and provide sufficient airflow when the hydronic heat is energized. These systems allow a low minimum inlet static pressure, permitting the use of smaller, more energy efficient fan systems. Hot water reheat coils located at each terminal can additionally satisfy zone heating loads when the equipment is providing cooling. The minimum airflow set points can be set to zero. The fan provides airflow across the heat coil when the primary air source is off.

A wall-mounted thermostat located in each zone will sense load requirements and activate the control sequence to accommodate cooling or heating. Load requirements and sound level acceptability govern terminal sizing. This control package provides the following sequences of operations:

A. Cooling: When the primary air source is providing cooling (as detected by the primary air sensor), refer to numbers on flow diagram. See Fig. 1.
   1. 1-2 indicates that maximum airflow is established by the user-defined maximum damper position until the zone comes under control at 2.
   2. Beginning at 2, the airflow is regulated over a throttling range by the damper until the user-defined minimum damper position is reached at 3.
   3. 3-4 indicates that, should the zone temperature continue to fall, the damper will hold the minimum damper position.

NOTE: The minimum damper position could be set to zero on any one zone. In this case, the damper will hold a fully closed position if the zone temperature continues to fall.

B. Hot water reheat: When the primary air source is cooling, refer to numbers on flow diagram.
   1. As the zone temperature falls below the occupied heating set point, the Occupied Heating mode is in effect.
   2. Below the heating set point, the airflow is increased to the user-defined maximum heat limit. The terminal fan is energized. At this point the hot water valve modulates to maintain occupied heating setpoint.

NOTE: If hydronic heat is configured on and the system fan has not yet been energized the valve will be open for a period of time before the system fan will be commanded on to allow the coil to heat up before delivering conditioned air.

   3. As the zone temperature rises, the hot water valve modulates closed and the fan is deenergized.

C. Unoccupied time period: (cooling)
   When the unoccupied period is reached, the user-defined occupied cooling set point is reset upward to a user-defined unoccupied cooling set point. The damper will throttle in the same manner (as per A) during the unoccupied period, using the unoccupied cooling set point.

D. Unoccupied time period: (auxiliary heat)
   When the unoccupied period is reached, the user-defined occupied heating set point is reset downward to a user-defined unoccupied heating set point. The hot water valve and fan will operate as required to satisfy the heating load.

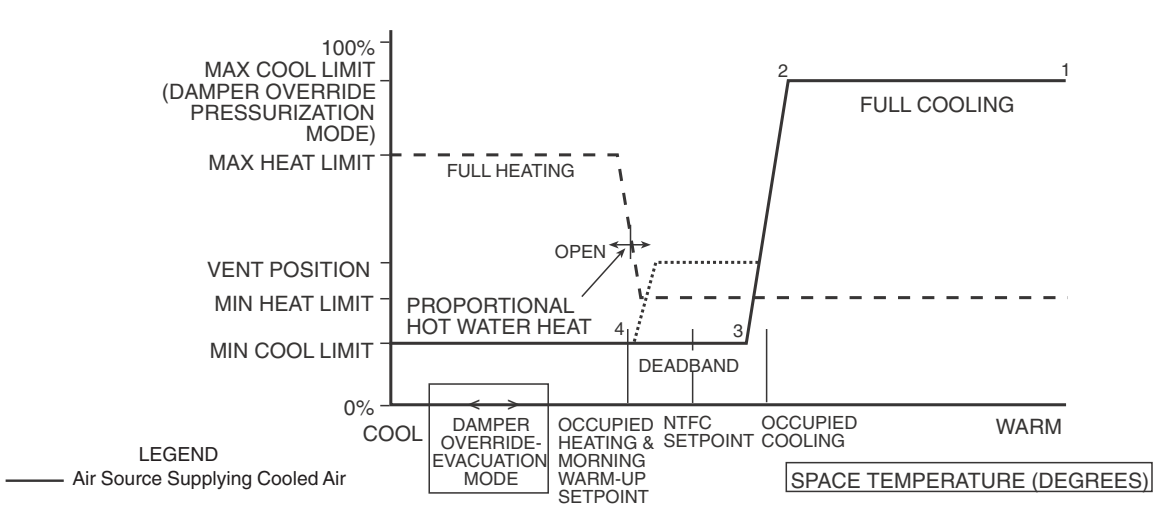

Figure 1 - Sequence of Operation for VVT, Cooling with Proportional Hot Water Heat

PRODUCT INFORMATION IS SUBJECT TO CHANGE WITHOUT NOTICE. 06/15/2010

JOB NAME	JOB NUMBER	LOCATION	PAGE NUMBER	DRAWING NUMBER
BUYER	BUYER #	SHEET	1 OF 2	45M/N/R-B-8860

CODE	Carrier A United Technologies Company	THIS DOCUMENT IS THE PROPERTY OF CARRIER CORPORATION AND IS DELIVERED UPON THE EXPRESS CONDITION THAT THE CONTENTS WILL NOT BE DISCLOSED OR USED WITHOUT CARRIER CORPORATION'S WRITTEN CONSENT	SUBMISSION OF THESE DRAWINGS OR DOCUMENTS DOES NOT CONSTITUTE PART PERFORMANCE OR ACCEPTANCE OF CONTRACT	VARIABLE VOLUME, VARIABLE TEMPERATURE	45 MB,NB,RB
CATALOG #					

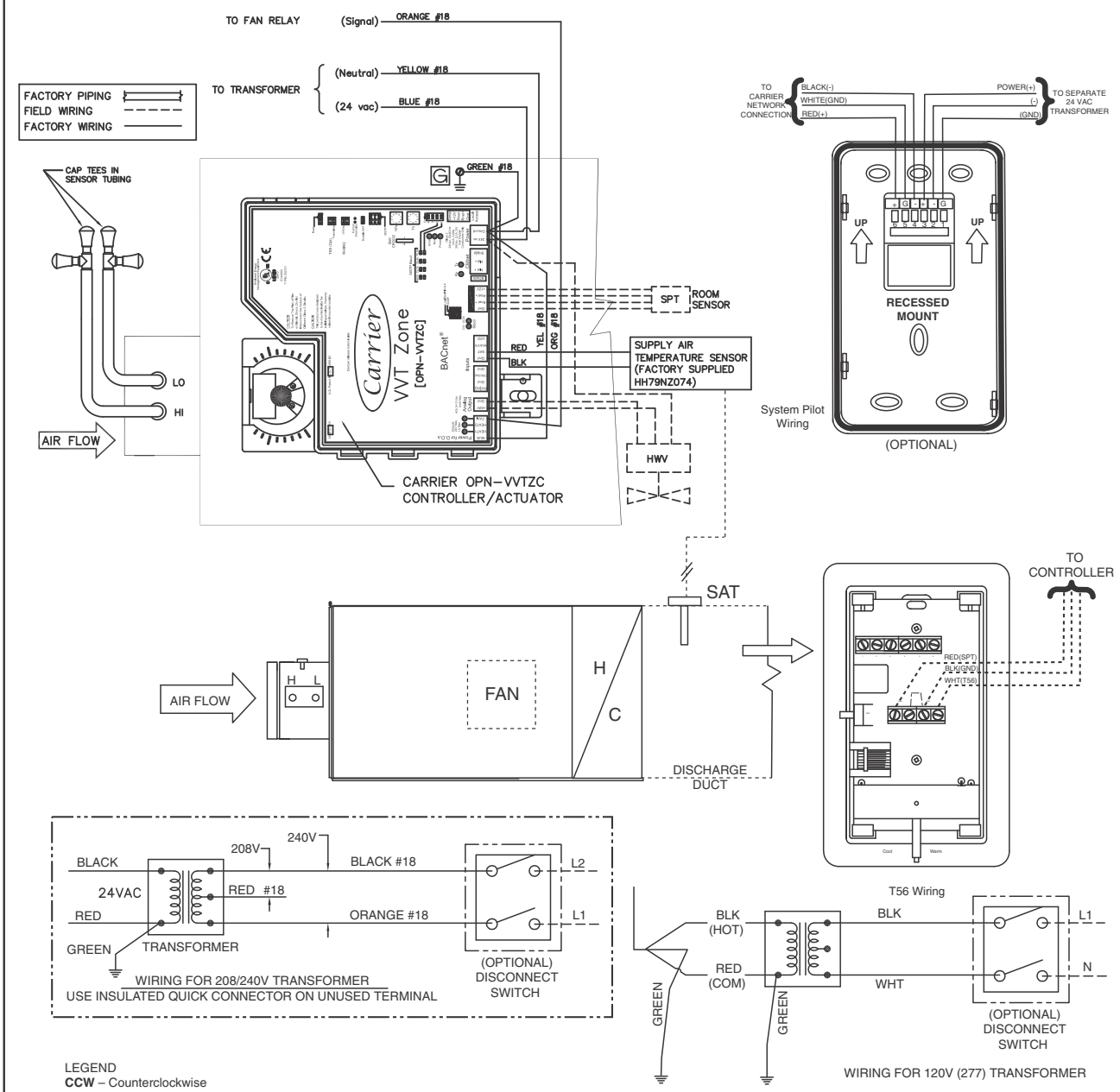

LEGEND
CCW – Counterclockwise
COM – Common
CW – Clockwise
DMPPOS – Damper Position
GND – Ground
DAT – Discharge Air Temperature Sensor
- - - - - - - - Field-Supplied Wiring
———— Factory Wiring

PRODUCT INFORMATION IS SUBJECT TO CHANGE WITHOUT NOTICE. 06/15/2010

JOB NAME	JOB NUMBER	LOCATION	PAGE NUMBER	DRAWING NUMBER
BUYER	BUYER #	SHEET	2 OF 2	45M/N/R-B-8860

CODE CATALOG #	Carrier A United Technologies Company	THIS DOCUMENT IS THE PROPERTY OF CARRIER CORPORATION AND IS DELIVERED UPON THE EXPRESS CONDITION THAT THE CONTENTS WILL NOT BE DISCLOSED OR USED WITHOUT CARRIER CORPORATION'S WRITTEN CONSENT.	SUBMISSION OF THESE DRAWINGS OR DOCUMENTS DOES NOT CONSTITUTE PART PERFORMANCE OR ACCEPTANCE OF CONTRACT.	VARIABLE VOLUME, VARIABLE TEMPERATURE	45 MB,NB, RB

BACnet VVT® PARALLEL (INTERMITTENT) FAN POWERED TERMINAL CONTROL WITH COMBINATION BASEBOARD AND DUCT ELECTRIC HEAT, PRESSURE DEPENDENT

CARRIER CONTROL PACKAGE NO. 8865

Application:

Parallel fan powered terminals equipped with the above control package are designed to work with cooling only primary air source equipment and provide pressure dependent, variable volume, variable temperature (VVT) control when connected to a VVT zone thermostat. The intermittent terminal fan is used to pull in ceiling plenum air as the first stage of heat and provide sufficient airflow when the electric heat is energized. These systems allow a low minimum inlet static pressure, permitting the use of smaller, more energy efficient fan systems. Two-stage electric reheat coils located at each terminal and baseboard heat can additionally satisfy zone heating loads when the equipment is providing cooling. The minimum airflow set point may be set to zero. The fan provides airflow across the heat coil when the primary air source is off.

A wall-mounted thermostat located in each zone will sense load requirements and activate the control sequence to accommodate cooling or heating. Load requirements and sound level acceptability govern terminal sizing. This control package provides the following sequences of operations:

A. Cooling:

When the primary air source is providing cooling (as detected by the primary air sensor), refer to numbers on flow diagram. See Fig. 1.

1. Between 1 and 2, maximum airflow is established by the user-defined maximum damper position until the zone comes under control at 2.
2. Beginning at 2, the airflow is regulated over a throttling range by the damper until the user-defined minimum damper position is reached at 3.
3. Between 3 and 4, should the zone temperature continue to fall, the damper will hold the minimum damper position.

NOTE: The minimum damper position could be set to zero on any one zone. In this case, the damper will hold a fully closed position if the zone temperature continues to fall.

B. Electric reheat:

When the primary air source is cooling, refer to numbers on flow diagram. See Fig. 1.

1. As the zone temperature falls below the occupied heating set point, the Occupied Heating mode is in effect at 4.
2. At 0.25 degrees below the heating set point, the terminal fan is energized. At 1.0 degrees demand, the first stage of electric heat is energized. At 1.5 degrees demand, the baseboard heat is energized.
3. As the zone temperature rises to less than 0.5 degrees of demand, the stages of heat and fan are deenergized.

C. Unoccupied time period (cooling):

When the unoccupied period is reached, the user-defined occupied cooling set point is reset upward to a user-defined unoccupied cooling set point. The damper will throttle in the same manner (as per A) during the unoccupied period, using the unoccupied cooling set point.

D. Unoccupied time period (auxiliary heat):

When the unoccupied period is reached, the user-defined occupied heating set point is reset downward to a user-defined unoccupied heating set point. The electric heat and fan will operate as required to satisfy the heating load.

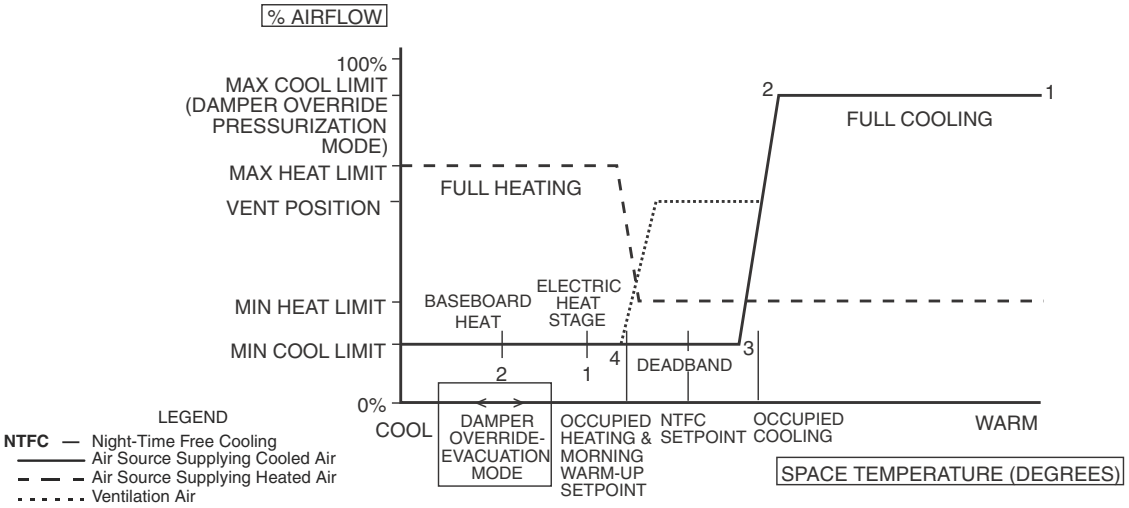

Figure 1 — Sequence of Operation for VVT, Cooling with Staged Electric and Baseboard Heat

PRODUCT INFORMATION IS SUBJECT TO CHANGE WITHOUT NOTICE. 06/15/2010

JOB NAME	JOB NUMBER	LOCATION	PAGE NUMBER	DRAWING NUMBER
BUYER	BUYER #	SHEET	1 OF 2	45M/N/R-B-8865

CODE CATALOG #	Carrier A United Technologies Company	THIS DOCUMENT IS THE PROPERTY OF CARRIER CORPORATION AND IS DELIVERED UPON THE EXPRESS CONDITION THAT THE CONTENTS WILL NOT BE DISCLOSED OR USED WITHOUT CARRIER CORPORATION'S WRITTEN CONSENT.	SUBMISSION OF THESE DRAWINGS OR DOCUMENTS DOES NOT CONSTITUTE PART PERFORMANCE OR ACCEPTANCE OF CONTRACT.	VARIABLE VOLUME, VARIABLE TEMPERATURE	45 MB,NB, RB

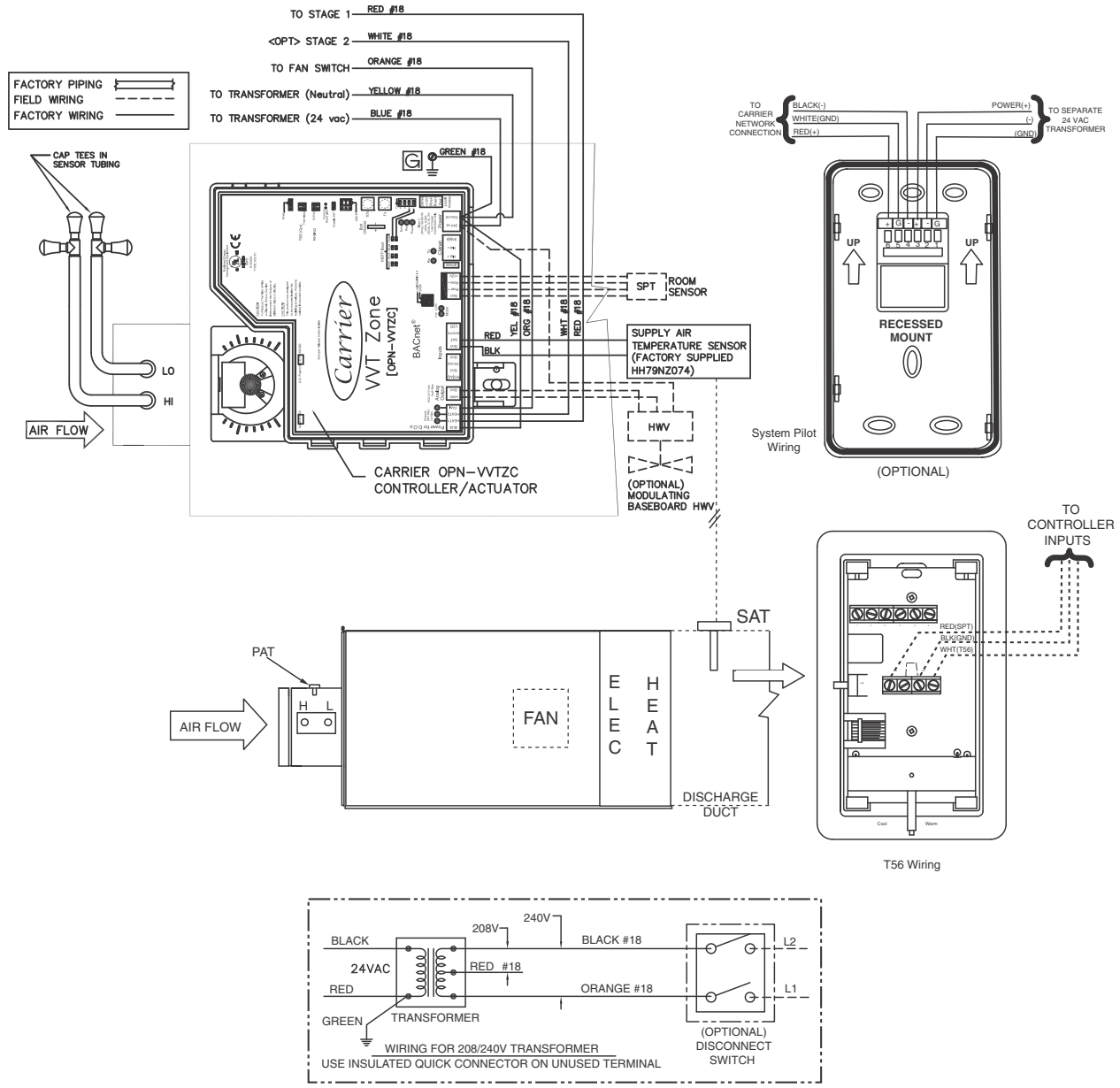

LEGEND

AUX DMP	—	Auxiliary Damper
C	—	Contactor
CCW	—	Counterclockwise
COM	—	Common
CW	—	Clockwise
DMPPOS	—	Damper Position
GND	—	Ground
IAQ/RH	—	Indoor Air Quality/Relative Humidity
PAT	—	Primary Air Temperature Sensor
SAT	—	Supply Air Temperature Sensor
SPT	—	Space Temperature Sensor
- - - -		Field-Supplied Wiring
———		Factory Wiring

PRODUCT INFORMATION IS SUBJECT TO CHANGE WITHOUT NOTICE. 06/15/2010

JOB NAME	JOB NUMBER	LOCATION	PAGE NUMBER	DRAWING NUMBER
BUYER	BUYER #	SHEET	2 OF 2	45M/N/R-B-8865

CODE CATALOG #	Carrier A United Technologies Company	THIS DOCUMENT IS THE PROPERTY OF CARRIER CORPORATION AND IS DELIVERED UPON THE EXPRESS CONDITION THAT THE CONTENTS WILL NOT BE DISCLOSED OR USED WITHOUT CARRIER CORPORATION'S WRITTEN CONSENT.	SUBMISSION OF THESE DRAWINGS OR DOCUMENTS DOES NOT CONSTITUTE PART PERFORMANCE OR ACCEPTANCE OF CONTRACT.	VARIABLE VOLUME, VARIABLE TEMPERATURE	45 MB,NB, RB

BACnet VVT® PARALLEL (INTERMITTENT) FAN POWERED TERMINAL CONTROL WITH PROPORTIONAL SOLID-STATE RELAY (SSR) ELECTRIC HEAT

PRESSURE DEPENDENT

CARRIER CONTROL PACKAGE NO. 8870

Application:

Parallel fan powered terminals equipped with the above control package are designed to work with cooling only primary air source equipment and provide pressure dependent, variable volume, variable temperature (VVT) control when connected to a VVT zone thermostat. The intermittent terminal fan is used to pull in ceiling plenum air as the first stage of heat and provide sufficient airflow when the electric heat is operating. These systems allow a low minimum inlet static pressure, permitting the use of smaller, more energy efficient fan systems. Electric heat coils located at each terminal can additionally satisfy zone heating loads when the equipment is providing cooling. The minimum airflow set points can be set to zero. The fan provides airflow across the heat coil when the primary air source is off.

A wall-mounted thermostat located in each zone will sense load requirements and activate the control sequence to accommodate cooling or heating. Load requirements and sound level acceptability govern terminal sizing. This control package provides the following sequences of operations:

A. Cooling:

When the primary air source is providing cooling (as detected by the primary air sensor), refer to numbers on flow diagram. See Fig. 1.

1. Between 1 and 2, maximum airflow is established by the user-defined maximum damper position until the zone comes under control at 2.
2. Beginning at 2, the airflow is regulated over a throttling range by the damper until the user-defined minimum damper position is reached at 3.
3. Between 3 and 4, should the zone temperature continue to fall, the damper will hold the minimum damper position.

NOTE: The minimum damper position could be set to zero on any one zone. In this case, the damper will hold a fully closed position if the zone temperature continues to fall.

B. Electric heat:

When the primary air source is cooling, refer to numbers on flow diagram.

1. As the zone temperature falls below the occupied heating set point, the Occupied Heating mode is in effect at 4.
2. Below the heating set point, the airflow is maintained at the user-defined minimum cool limit. The terminal fan is energized. Between 4 and 5, the proportional electric heat modulates to maintain occupied heating setpoint.
3. As the zone temperature rises, the proportional electric heater output is reduced to zero and the fan is deenergized.

C. Unoccupied time period (cooling):

When the unoccupied period is reached, the user-defined occupied cooling set point is reset upward to a user-defined unoccupied cooling set point. The damper will throttle in the same manner (as per A) during the unoccupied period, using the unoccupied cooling set point.

D. Unoccupied time period (auxiliary heat):

When the unoccupied period is reached, the user-defined occupied heating set point is reset downward to a user-defined unoccupied heating set point. The proportional electric heat and fan will operate as required to satisfy the heating load.

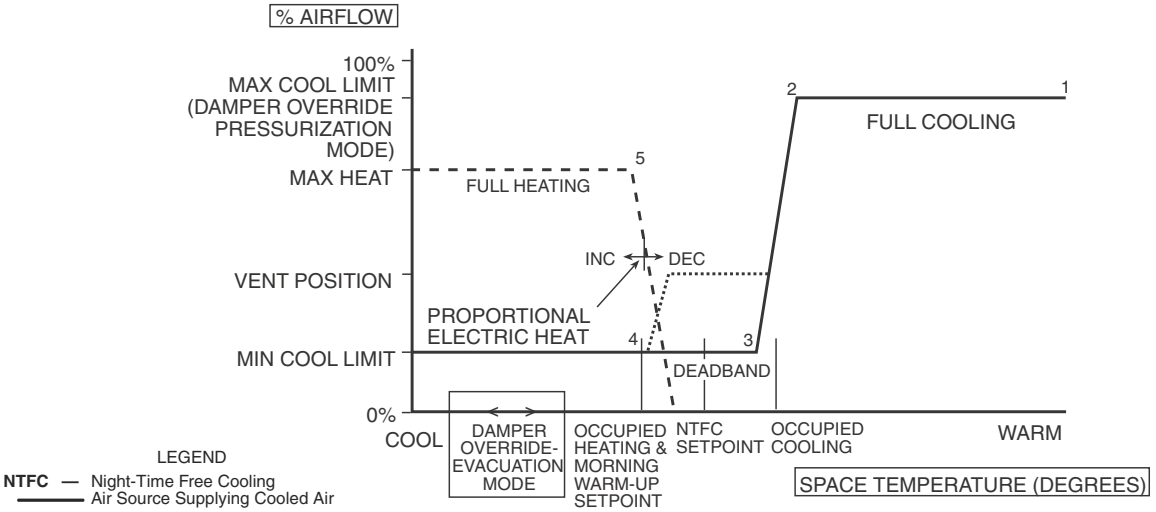

Figure 1 — Sequence of Operation for VVT, Cooling with Proportional Electric Heat

PRODUCT INFORMATION IS SUBJECT TO CHANGE WITHOUT NOTICE. 06/15/2010

JOB NAME	JOB NUMBER	LOCATION	PAGE NUMBER	DRAWING NUMBER
BUYER	BUYER #	SHEET	1 OF 2	45M/N/R-B-8870

CODE	Carrier A United Technologies Company	THIS DOCUMENT IS THE PROPERTY OF CARRIER CORPORATION AND IS DELIVERED UPON THE EXPRESS CONDITION THAT THE CONTENTS WILL NOT BE DISCLOSED OR USED WITHOUT CARRIER CORPORATION'S WRITTEN CONSENT.	SUBMISSION OF THESE DRAWINGS OR DOCUMENTS DOES NOT CONSTITUTE PART PERFORMANCE OR ACCEPTANCE OF CONTRACT.	VARIABLE VOLUME, VARIABLE TEMPERATURE	45 MB,NB, RB
CATALOG #					

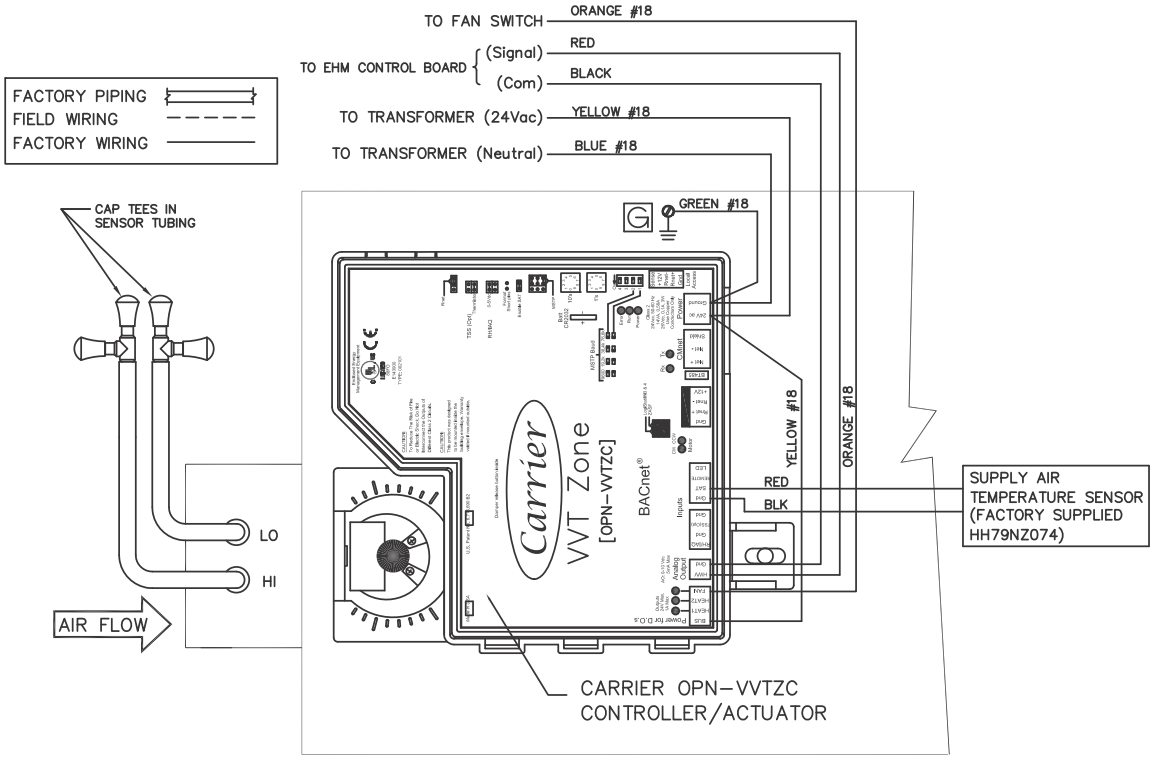

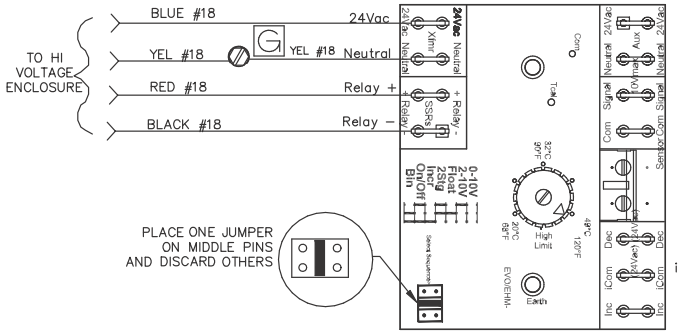

LEGEND

AUX DMP — Auxiliary Damper
CCW — Counterclockwise
COM — Common
CW — Clockwise
DMPPOS — Damper Position
GND — Ground
IAQ/RH — Indoor Air Quality/Relative Humidity
PAT — Primary Air Temperature Sensor
– – – – Field-Supplied Wiring
——— Factory Wiring

PRODUCT INFORMATION IS SUBJECT TO CHANGE WITHOUT NOTICE. 06/15/2010

JOB NAME	JOB NUMBER	LOCATION	PAGE NUMBER	DRAWING NUMBER
BUYER	BUYER #	SHEET	2 OF 2	45M/N/R-B-8870

CODE CATALOG #	Carrier A United Technologies Company	THIS DOCUMENT IS THE PROPERTY OF CARRIER CORPORATION AND IS DELIVERED UPON THE EXPRESS CONDITION THAT THE CONTENTS WILL NOT BE DISCLOSED OR USED WITHOUT CARRIER CORPORATION'S WRITTEN CONSENT	SUBMISSION OF THESE DRAWINGS OR DOCUMENTS DOES NOT CONSTITUTE PART PERFORMANCE OR ACCEPTANCE OF CONTRACT	ANALOG CONTROL SEQUENCE 2200	45 JA,KA,QA

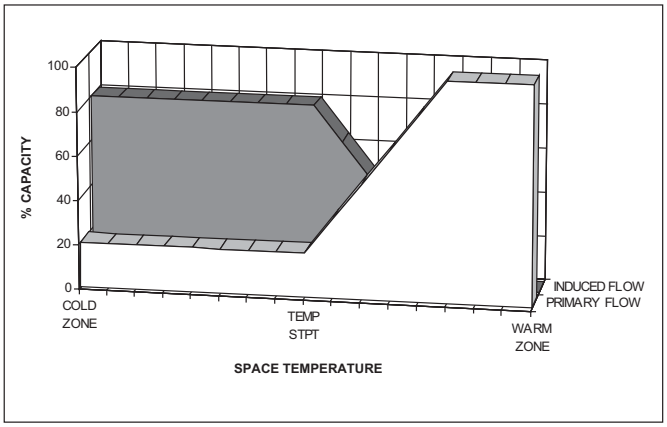

CONSTANT VOLUME FAN POWERED TERMINAL UNIT ANALOG CONTROL SEQUENCE 2200

Cooling Only

2200 — User defined primary air flow setpoints are maintained regardless of central system pressure, while terminal fan runs continuously. Minimum and Maximum air flow setpoints are adjusted at the room thermostat as opposed to the terminal controller, with a digital voltmeter (DVM). The thermostat output for minimum and maximum air flow setpoints range from 0-10vdc (0-3300 fpm).

Under load for cooling, primary air flow is at maximum when the occupied space is 2°F above the user defined temperature setpoint. Primary air flow should not exceed fan air flow setpoint. Primary air flow is proportionally reduced to the minimum air flow setpoint as room temperature approaches setpoint. As primary air flow is reduced, the constant volume terminal fan proportionally induces ceiling plenum return air or ducted return air, to maintain a constant volume of air to the occupied space.

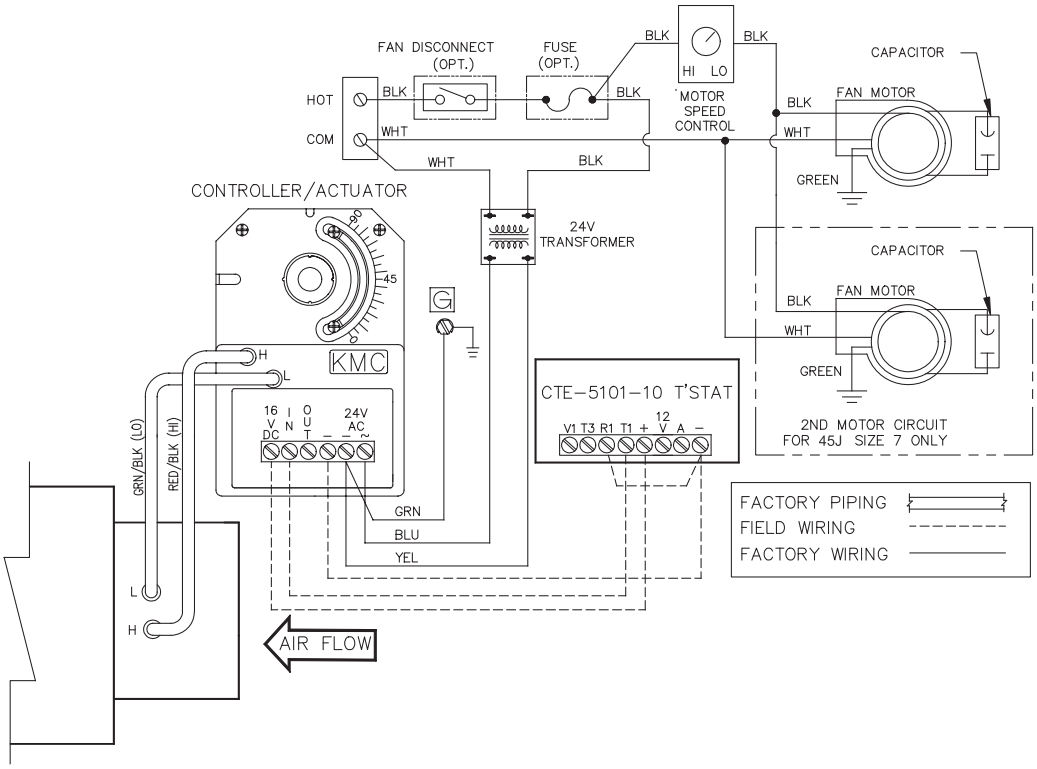

PRODUCT INFORMATION IS SUBJECT TO CHANGE WITHOUT NOTICE. 01/29/2003

JOB NAME	JOB NUMBER	LOCATION		DRAWING NUMBER
BUYER	BUYER #	REVISION	SHEET	45J/K/Q-A-2200

CODE	Carrier A United Technologies Company	THIS DOCUMENT IS THE PROPERTY OF CARRIER CORPORATION AND IS DELIVERED UPON THE EXPRESS CONDITION THAT THE CONTENTS WILL NOT BE DISCLOSED OR USED WITHOUT CARRIER CORPORATION'S WRITTEN CONSENT	SUBMISSION OF THESE DRAWINGS OR DOCUMENTS DOES NOT CONSTITUTE PART PERFORMANCE OR ACCEPTANCE OF CONTRACT	ANALOG CONTROL SEQUENCE 2201	45 JA,KA,QA
CATALOG #					

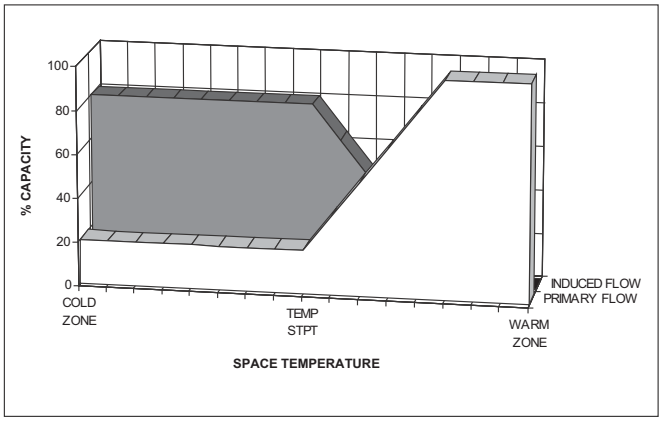

CONSTANT VOLUME FAN POWERED TERMINAL UNIT ANALOG CONTROL SEQUENCE 2201

Cooling Only With Automatic Night Shutdown On Loss Of Primary Air

2201 — User defined primary air flow setpoints are maintained regardless of central system pressure, while terminal fan runs continuously. Minimum and Maximum air flow setpoints are adjusted at the room thermostat as opposed to the terminal controller, with a digital voltmeter (DVM). The thermostat output for minimum and maximum air flow setpoints range from 0-10vdc (0-3300 fpm).

Under load for cooling, primary air flow is at maximum when the occupied space is 2° F above the user defined temperature setpoint. Primary air flow should not exceed fan air flow setpoint. Primary air flow is proportionally reduced to the minimum air flow setpoint as room temperature approaches setpoint. As primary air flow is reduced, the constant volume terminal fan proportionally induces ceiling plenum return air or ducted return air, to maintain a constant volume of air to the occupied space.

Unoccupied mode is in effect when the central air handling station serving primary air to the terminal, shuts down. Upon a signal loss of primary air at the terminals inlet probe, an air flow switch automatically shuts down the constant volume terminal fan.

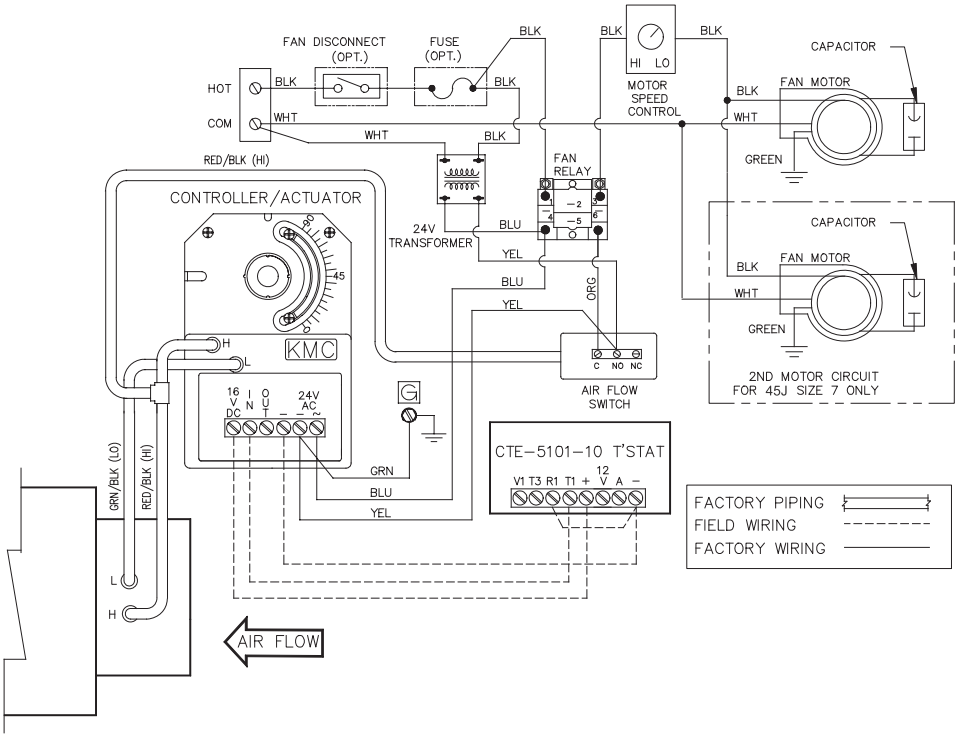

PRODUCT INFORMATION IS SUBJECT TO CHANGE WITHOUT NOTICE. 01/29/2003

JOB NAME	JOB NUMBER	LOCATION		DRAWING NUMBER
BUYER	BUYER #	REVISION	SHEET	45J/K/Q-A-2201

CODE	Carrier A United Technologies Company	THIS DOCUMENT IS THE PROPERTY OF CARRIER CORPORATION AND IS DELIVERED UPON THE EXPRESS CONDITION THAT THE CONTENTS WILL NOT BE DISCLOSED OR USED WITHOUT CARRIER CORPORATION'S WRITTEN CONSENT	SUBMISSION OF THESE DRAWINGS OR DOCUMENTS DOES NOT CONSTITUTE PART PERFORMANCE OR ACCEPTANCE OF CONTRACT	ANALOG CONTROL SEQUENCE 2202	45 JA,KA,QA
CATALOG #					

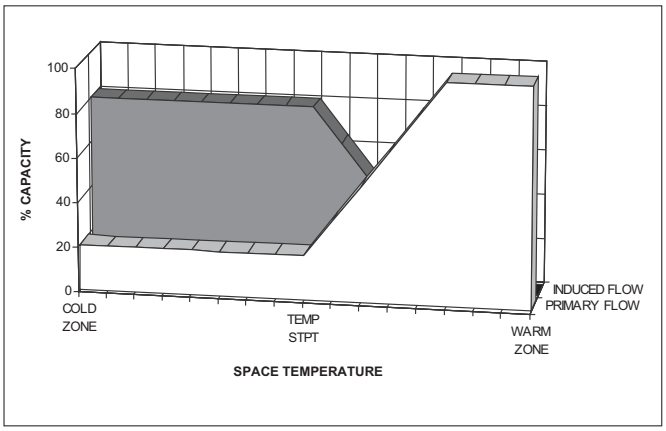

CONSTANT VOLUME FAN POWERED TERMINAL UNIT ANALOG CONTROL SEQUENCE 2202

Cooling Only With Remote Night Shutdown

2202 — User defined primary air flow setpoints are maintained regardless of central system pressure, while terminal fan runs continuously. Minimum and Maximum air flow setpoints are adjusted at the room thermostat as opposed to the terminal controller, with a digital voltmeter (DVM). The thermostat output for minimum and maximum air flow setpoints range from 0-10vdc (0-3300 fpm).

Under load for cooling, primary air flow is at maximum when the occupied space is 2°F above the user defined temperature setpoint. Primary air flow should not exceed fan air flow setpoint. Primary air flow is proportionally reduced to the minimum air flow setpoint as room temperature approaches setpoint. As primary air flow is reduced, the constant volume terminal fan proportionally induces ceiling plenum return air or ducted return air, to maintain a constant volume of air to the occupied space.

Unoccupied mode is in effect when the factory supplied 24vac fan relay is de-energized by a remote switch supplied by others. Upon a signal loss by the remote switch, the constant volume terminal fan shutsdown. The terminal unit fan must be de-energized after the central air source has shutdown and, re-energized before the central air source has started.

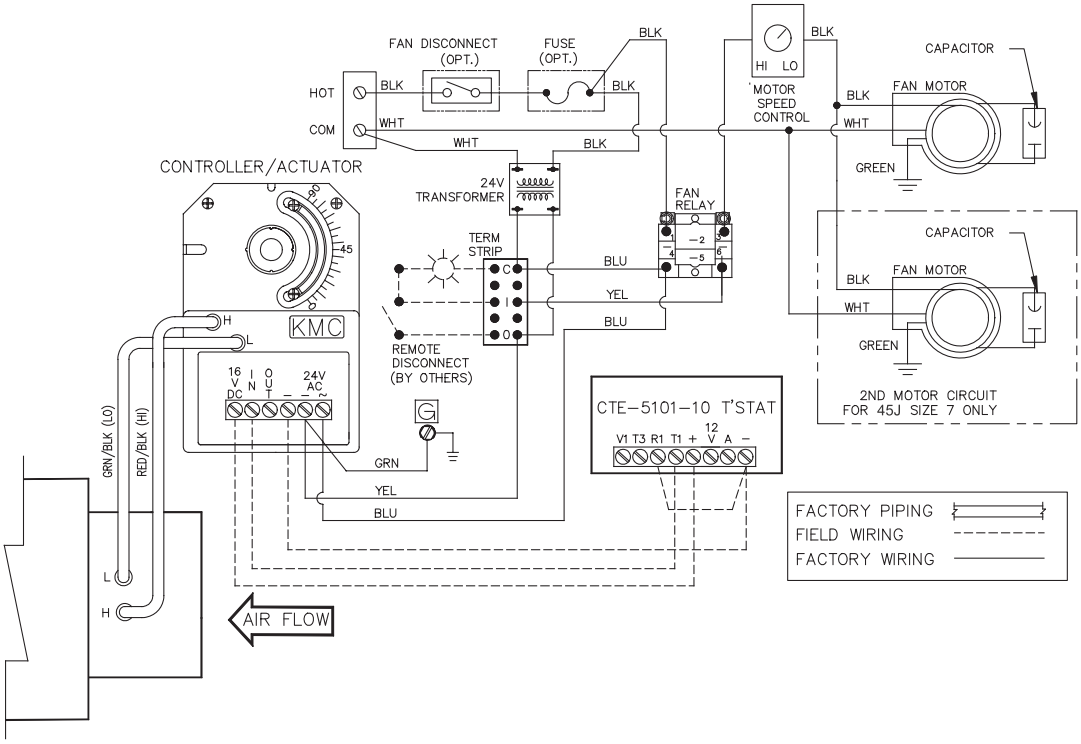

PRODUCT INFORMATION IS SUBJECT TO CHANGE WITHOUT NOTICE. 01/29/2003

JOB NAME	JOB NUMBER	LOCATION		DRAWING NUMBER
BUYER	BUYER #	REVISION	SHEET	45J/K/Q-A-2202

CODE CATALOG #	Carrier A United Technologies Company	THIS DOCUMENT IS THE PROPERTY OF CARRIER CORPORATION AND IS DELIVERED UPON THE EXPRESS CONDITION THAT THE CONTENTS WILL NOT BE DISCLOSED OR USED WITHOUT CARRIER CORPORATION'S WRITTEN CONSENT	SUBMISSION OF THESE DRAWINGS OR DOCUMENTS DOES NOT CONSTITUTE PART PERFORMANCE OR ACCEPTANCE OF CONTRACT	ANALOG CONTROL SEQUENCE 2203	45 JA,KA,QA

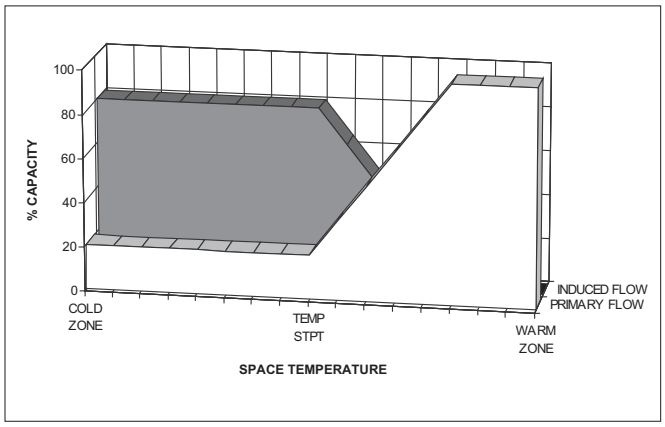

CONSTANT VOLUME FAN POWERED TERMINAL UNIT ANALOG CONTROL SEQUENCE 2203

Cooling Only With Automatic Night Setback

2203 — User defined primary air flow setpoints are maintained regardless of central system pressure, while terminal fan runs continuously. Minimum and Maximum air flow setpoints are adjusted at the room thermostat as opposed to the terminal controller, with a digital voltmeter (DVM). The thermostat output for minimum and maximum air flow setpoints range from 0-10vdc (0-3300 fpm).

Under load for cooling, primary air flow is at maximum when the occupied space is 2°F above the user defined temperature setpoint. Primary air flow should not exceed fan air flow setpoint. Primary air flow is proportionally reduced to the minimum air flow setpoint as room temperature approaches setpoint. As primary air flow is reduced, the constant volume terminal fan proportionally induces ceiling plenum return air or ducted return air, to maintain a constant volume of air to the occupied space.

Unoccupied mode is in effect when the central air handling station serving primary air to the terminal, shuts down. Upon a signal loss of primary air at the terminals inlet probe, an air flow switch automatically swithes the terminal unit into the night setback mode. The night setback temperature setpoint is field adjustable. The constant volume fan will operate intermittently during night setback to maintain the user defined heating setback temperature.

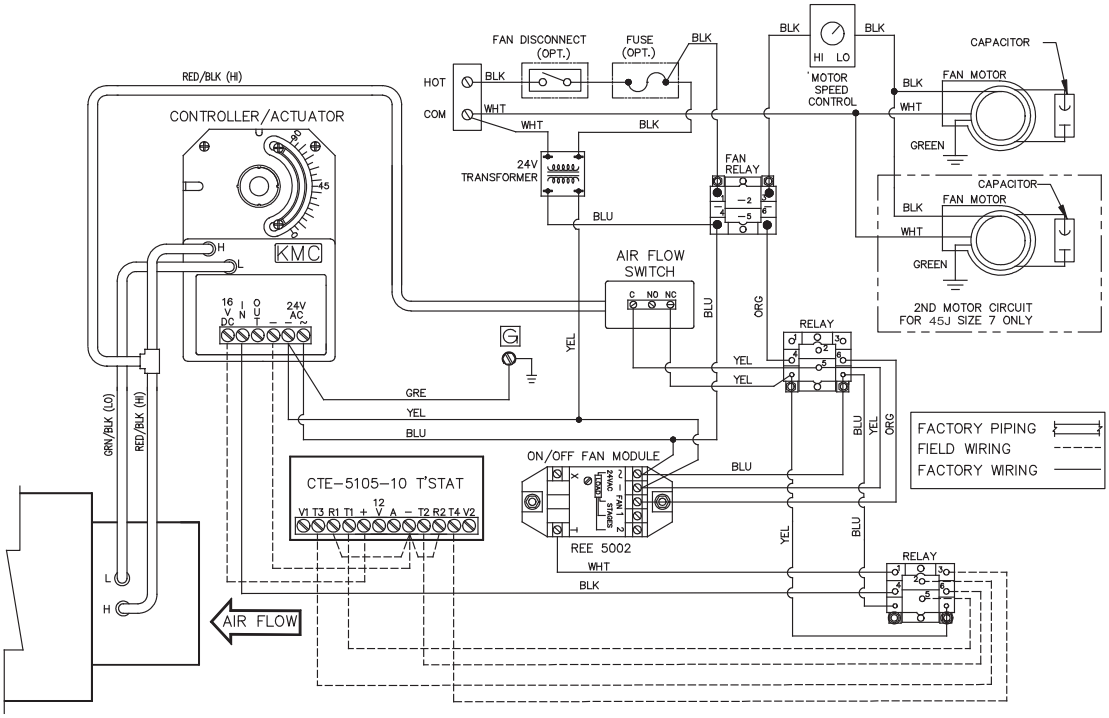

PRODUCT INFORMATION IS SUBJECT TO CHANGE WITHOUT NOTICE. 01/29/2003

JOB NAME	JOB NUMBER	LOCATION		DRAWING NUMBER
BUYER	BUYER #	REVISION	SHEET	45J/K/Q-A-2203

CODE CATALOG #	Carrier A United Technologies Company	THIS DOCUMENT IS THE PROPERTY OF CARRIER CORPORATION AND IS DELIVERED UPON THE EXPRESS CONDITION THAT THE CONTENTS WILL NOT BE DISCLOSED OR USED WITHOUT CARRIER CORPORATION'S WRITTEN CONSENT	SUBMISSION OF THESE DRAWINGS OR DOCUMENTS DOES NOT CONSTITUTE PART PERFORMANCE OR ACCEPTANCE OF CONTRACT	ANALOG CONTROL SEQUENCE 2204	45 JA,KA,QA

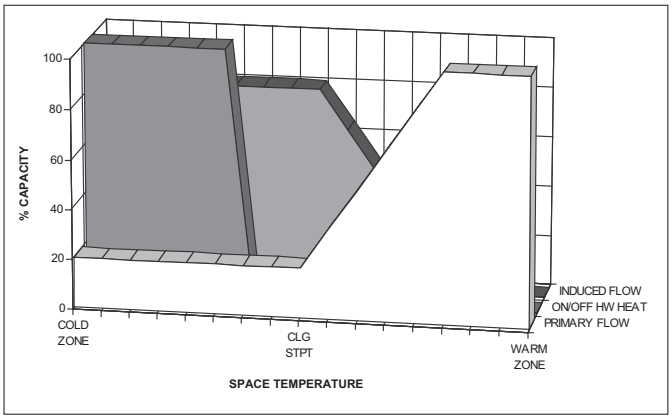

CONSTANT VOLUME FAN POWERED TERMINAL UNIT ANALOG CONTROL SEQUENCE 2204

Cooling With On/Off Hot Water Heat

2204 — User defined primary air flow setpoints are maintained regardless of central system pressure, while terminal fan runs continuously. Minimum and Maximum air flow setpoints are adjusted at the room thermostat as opposed to the terminal controller, with a digital voltmeter (DVM). The thermostat output for minimum and maximum air flow setpoints range from 0-10vdc (0-3300 fpm).

Under load for cooling, primary air flow is at maximum when the occupied space is 2°F above the user defined temperature setpoint. Primary air flow should not exceed fan air flow setpoint. Primary air flow is proportionally reduced to the minimum air flow setpoint as room temperature approaches setpoint. As primary air flow is reduced, the constant volume terminal fan proportionally induces ceiling plenum return air or ducted return air, to maintain a constant volume of air to the occupied space.

Under a load for heating, the field supplied 24vac on/off hot water valve will be energized at .7°F below the user defined temperature setpoint. Upon the signal for heat, the controller will apply 24vac to the normally closed on/off hot water valve. In order to apply a normally open hot water valve a field supplied reversing relay must be applied to the circuit by the field.

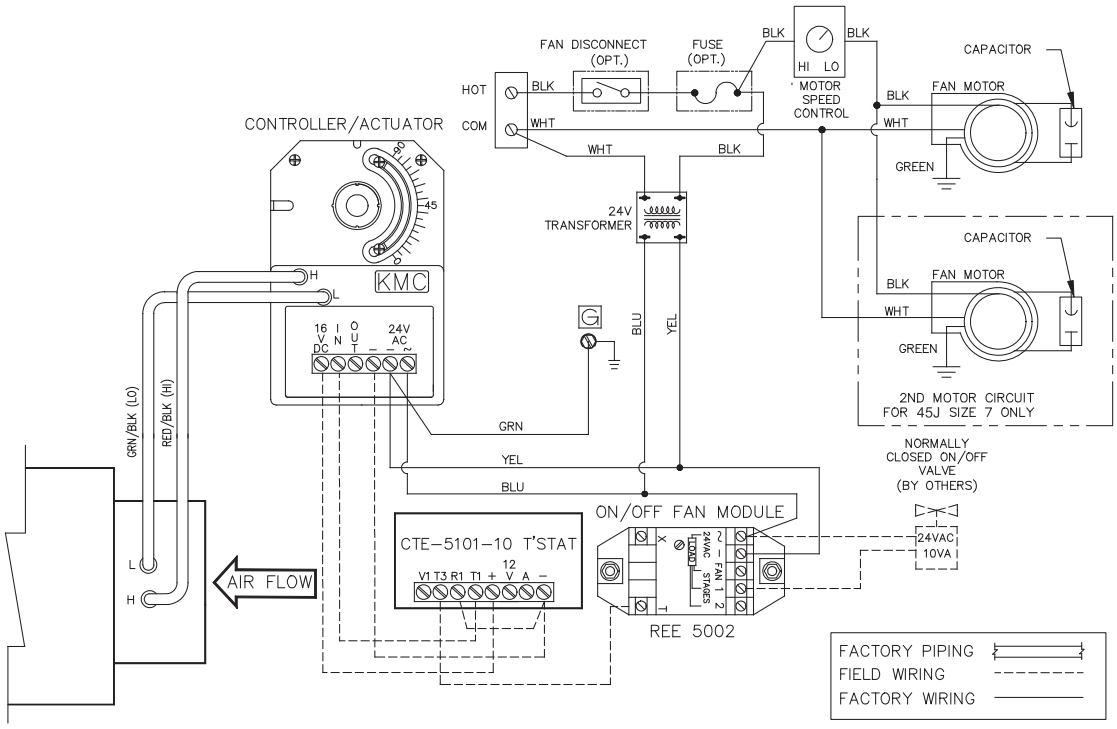

PRODUCT INFORMATION IS SUBJECT TO CHANGE WITHOUT NOTICE. 01/29/2003

JOB NAME	JOB NUMBER	LOCATION		DRAWING NUMBER
BUYER	BUYER #	REVISION	SHEET	45J/K/Q-A-2204

CODE	Carrier A United Technologies Company	THIS DOCUMENT IS THE PROPERTY OF CARRIER CORPORATION AND IS DELIVERED UPON THE EXPRESS CONDITION THAT THE CONTENTS WILL NOT BE DISCLOSED OR USED WITHOUT CARRIER CORPORATION'S WRITTEN CONSENT	SUBMISSION OF THESE DRAWINGS OR DOCUMENTS DOES NOT CONSTITUTE PART PERFORMANCE OR ACCEPTANCE OF CONTRACT	ANALOG CONTROL SEQUENCE 2205	45 JA,KA,QA
CATALOG #					

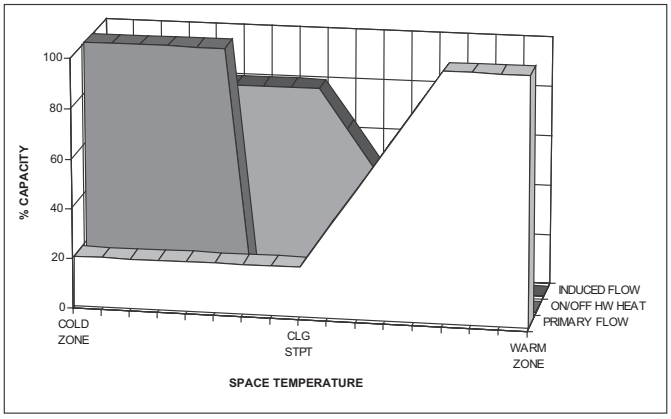

CONSTANT VOLUME FAN POWERED TERMINAL UNIT ANALOG CONTROL SEQUENCE 2205

Cooling With On/Off Hot Water Heat And Automatic Night Shutdown On Loss Of Primary Air

2205 — User defined primary air flow setpoints are maintained regardless of central system pressure, while terminal fan runs continuously. Minimum and Maximum air flow setpoints are adjusted at the room thermostat as opposed to the terminal controller, with a digital voltmeter (DVM). The thermostat output range is from 0-10vdc for minimum and maximum air flow setpoints (0-3300 fpm).

Under load for cooling, primary air flow is at maximum when the occupied space is 2 degrees above the user defined cooling setpoint. Primary air flow should not exceed fan air flow setpoint. Primary air flow is reduced proportionally as room temperature approaches the cooling setpoint. As primary air flow is reduced, the constant volume terminal fan proportionally induces ceiling plenum return air or ducted return air, to maintain a constant volume of air to the occupied space.

Unoccupied mode is in effect when the central air handling station serving primary air to the terminal, shuts down. Upon a signal loss of primary air at the terminals inlet probe, an air flow switch automatically shuts down the constant volume terminal fan.

Under a load for heating, the field supplied 24vac on/off hot water valve will be energized at the user defined heating setpoint. Upon the signal for heat, theo controller will apply 24vac to the normally closed on/off hot water valve. In order to apply a normally open hot water valve a field supplied reversing relay must be applied into the circuit by the field.

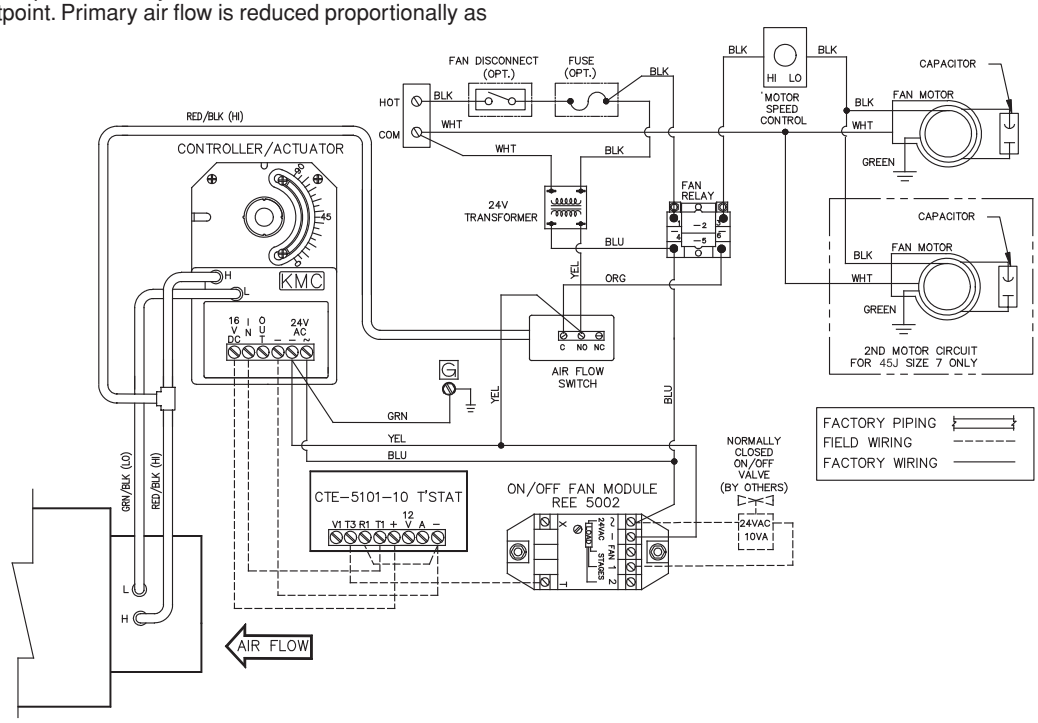

PRODUCT INFORMATION IS SUBJECT TO CHANGE WITHOUT NOTICE. 01/29/2003

JOB NAME	JOB NUMBER	LOCATION		DRAWING NUMBER
BUYER	BUYER #	REVISION	SHEET	45J/K/Q-A-2205

CODE CATALOG #	Carrier A United Technologies Company	THIS DOCUMENT IS THE PROPERTY OF CARRIER CORPORATION AND IS DELIVERED UPON THE EXPRESS CONDITION THAT THE CONTENTS WILL NOT BE DISCLOSED OR USED WITHOUT CARRIER CORPORATION'S WRITTEN CONSENT	SUBMISSION OF THESE DRAWINGS OR DOCUMENTS DOES NOT CONSTITUTE PART PERFORMANCE OR ACCEPTANCE OF CONTRACT	ANALOG CONTROL SEQUENCE 2206	45 JA,KA,QA

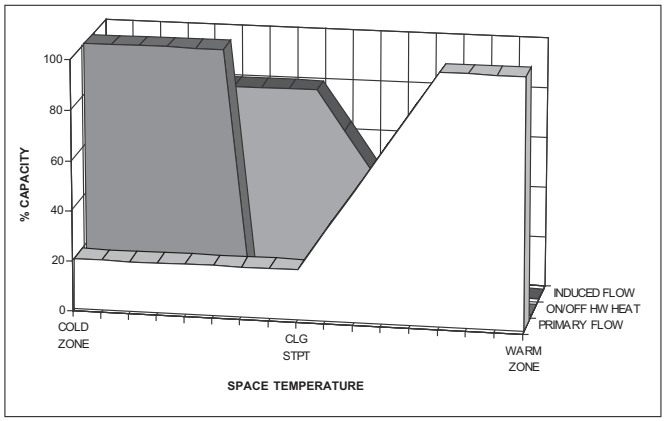

CONSTANT VOLUME FAN POWERED TERMINAL UNIT ANALOG CONTROL SEQUENCE 2206

Cooling With On/Off Hot Water Heat and Remote Night Shutdown

2206 — User defined primary air flow setpoints are maintained regardless of central system pressure, while terminal fan runs continuously. Minimum and Maximum air flow setpoints are adjusted at the room thermostat as opposed to the terminal controller, with a digital voltmeter (DVM). The thermostat output for minimum and maximum air flow setpoints range from 0-10vdc (0-3300 fpm).

Under load for cooling, primary air flow is at maximum when the occupied space is 2°F above the user defined temperature setpoint. Primary air flow should not exceed fan air flow setpoint. Primary air flow is proportionally reduced to the minimum air flow setpoint as room temperature approaches setpoint. As primary air flow is reduced, the constant volume terminal fan proportionally induces ceiling plenum return air or ducted return air, to maintain a constant volume of air to the occupied space.

Under a load for heating, the field supplied 24vac on/off hot water valve will be energized at .7°F below the user defined temperature setpoint. Upon the signal for heat, the controller will apply 24vac to the normally closed on/off hot water valve. In order to apply a normally open hot water valve a field supplied reversing relay must be applied to the circuit by the field.

Unoccupied mode is in effect when the factory supplied 24vac fan relay is de-energized by a remote switch supplied by others. Upon a signal loss by the remote switch, the constant volume terminal fan shutsdown. The terminal unit fan must be de-energized after the central air source has shutdown and, re-energized before the central air source has started.

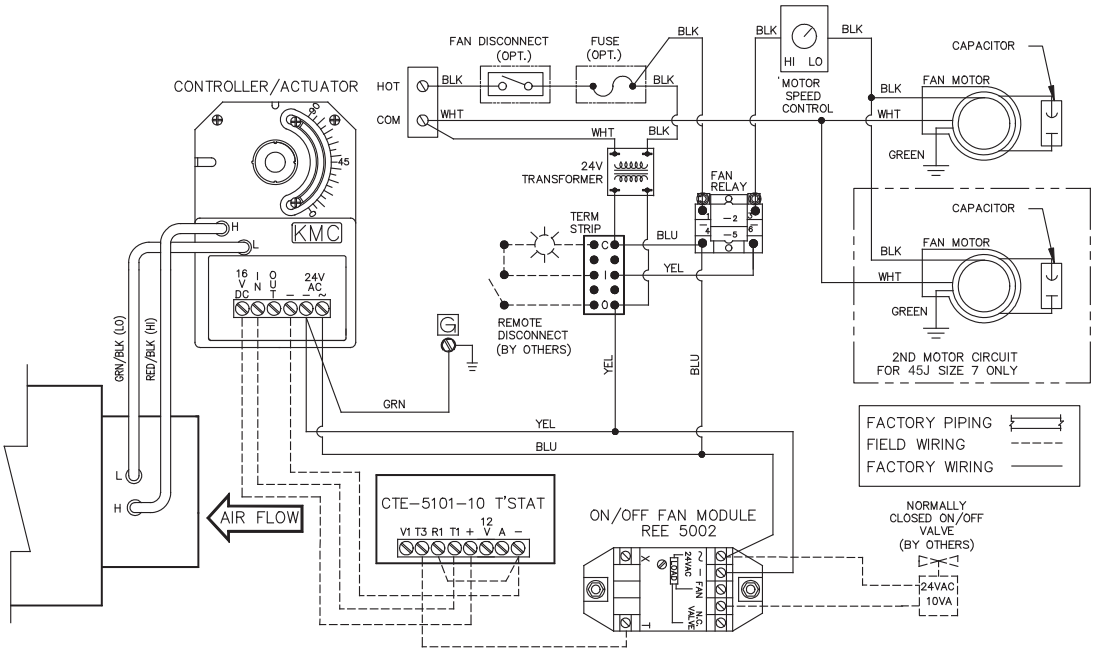

PRODUCT INFORMATION IS SUBJECT TO CHANGE WITHOUT NOTICE. 01/30/2003

JOB NAME	JOB NUMBER	LOCATION		DRAWING NUMBER
BUYER	BUYER #	REVISION	SHEET	45J/K/Q-A-2206

CODE	Carrier A United Technologies Company	THIS DOCUMENT IS THE PROPERTY OF CARRIER CORPORATION AND IS DELIVERED UPON THE EXPRESS CONDITION THAT THE CONTENTS WILL NOT BE DISCLOSED OR USED WITHOUT CARRIER CORPORATION'S WRITTEN CONSENT	SUBMISSION OF THESE DRAWINGS OR DOCUMENTS DOES NOT CONSTITUTE PART PERFORMANCE OR ACCEPTANCE OF CONTRACT	ANALOG CONTROL SEQUENCE 2207	45 JA,KA,QA
CATALOG #					

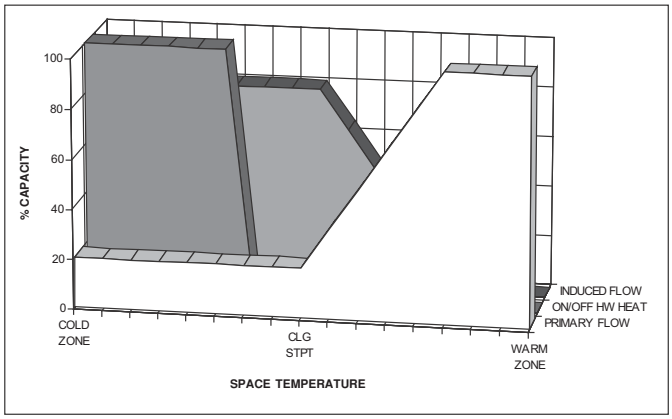

CONSTANT VOLUME FAN POWERED TERMINAL UNIT ANALOG CONTROL SEQUENCE 2207

Cooling With On/Off Hot Water Heat and Automatic Night Setback

2207 — User defined primary air flow setpoints are maintained regardless of central system pressure, while terminal fan runs continuously. Minimum and Maximum air flow setpoints are adjusted at the room thermostat as opposed to the terminal controller, with a digital voltmeter (DVM). The thermostat output for minimum and maximum air flow setpoints range from 0-10vdc (0-3300 fpm).

Under load for cooling, primary air flow is at maximum when the occupied space is 2°F above the user defined temperature setpoint. Primary air flow should not exceed fan air flow setpoint. Primary air flow is proportionally reduced to the minimum air flow setpoint as room temperature approaches setpoint. As primary air flow is reduced, the constant volume terminal fan proportionally induces ceiling plenum return air or ducted return air, to maintain a constant volume of air to the occupied space.

Under a load for heating, the field supplied 24vac on/off hot water valve will be energized at .7°F below the user defined temperature setpoint. Upon the signal for heat, the controller will apply 24vac to the normally closed on/off hot water valve. In order to apply a normally open hot water valve a field supplied reversing relay must be applied to the circuit by the field.

Unoccupied mode is in effect when the central air handling station serving primary air to the terminal, shuts down. Upon a signal loss of primary air at the terminals inlet probe, an air flow switch automatically switches the terminal unit into the night setback mode. The night setback temperature setpoint is field adjustable. The constant volume fan will operate intermittently during night setback to maintain the user defined heating setback temperature.

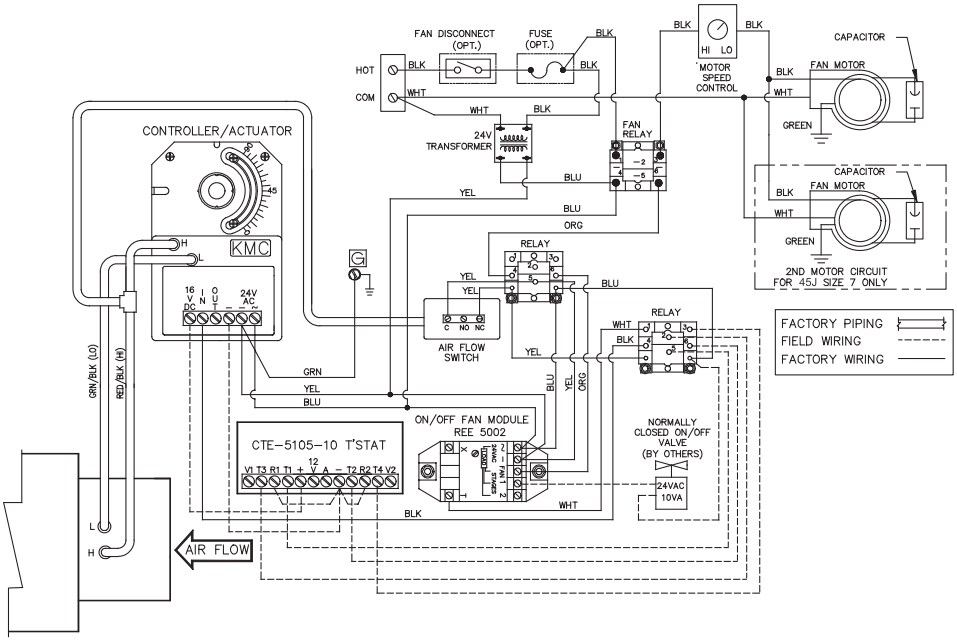

PRODUCT INFORMATION IS SUBJECT TO CHANGE WITHOUT NOTICE. 01/30/2003

JOB NAME	JOB NUMBER	LOCATION		DRAWING NUMBER
BUYER	BUYER #	REVISION	SHEET	45J/K/Q-A-2207

CODE CATALOG #	Carrier A United Technologies Company	THIS DOCUMENT IS THE PROPERTY OF CARRIER CORPORATION AND IS DELIVERED UPON THE EXPRESS CONDITION THAT THE CONTENTS WILL NOT BE DISCLOSED OR USED WITHOUT CARRIER CORPORATION'S WRITTEN CONSENT	SUBMISSION OF THESE DRAWINGS OR DOCUMENTS DOES NOT CONSTITUTE PART PERFORMANCE OR ACCEPTANCE OF CONTRACT	ANALOG CONTROL SEQUENCE 2208	45 JA,KA,QA

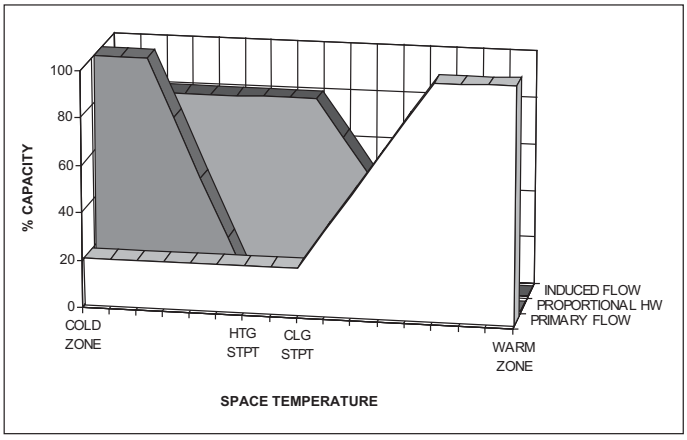

CONSTANT VOLUME FAN POWERED TERMINAL UNIT ANALOG CONTROL SEQUENCE 2208

Cooling With Proportional Hot Water Heat

2208 — User defined primary air flow setpoints are maintained regardless of central system pressure, while terminal fan runs continuously. Minimum and Maximum air flow setpoints are adjusted at the room thermostat as opposed to the terminal controller, with a digital voltmeter (DVM). The thermostat output for minimum and maximum air flow setpoints range from 0-10vdc (0-3300 fpm).

Under load for cooling, primary air flow is at maximum when the occupied space is 2° F above the user defined cooling setpoint. Primary air flow should not exceed fan air flow setpoint. Primary air flow is proportionally reduced to the minimum air flow setpoint as room temperature approaches the cooling setpoint. As primary air flow is reduced, the constant volume terminal fan proportionally induces ceiling plenum return air or ducted return air, to maintain a constant volume of air to the occupied space.

Under a load for heating, a field supplied normally closed, proportional hot water valve will begin to open at the user defined heating setpoint. The hot water valve will be fully open at 1° F below the heating setpoint.

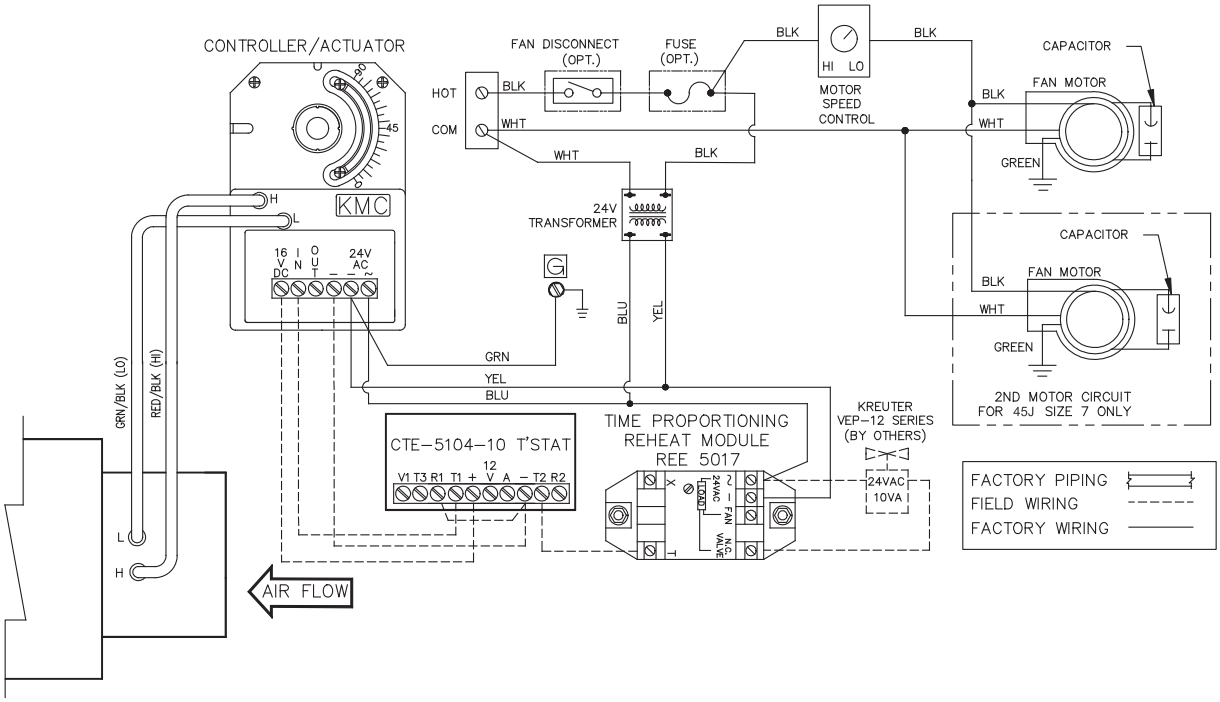

PRODUCT INFORMATION IS SUBJECT TO CHANGE WITHOUT NOTICE. 01/30/2003

JOB NAME	JOB NUMBER	LOCATION		DRAWING NUMBER
BUYER	BUYER #	REVISION	SHEET	45J/K/Q-A-2208

CODE CATALOG #	Carrier A United Technologies Company	THIS DOCUMENT IS THE PROPERTY OF CARRIER CORPORATION AND IS DELIVERED UPON THE EXPRESS CONDITION THAT THE CONTENTS WILL NOT BE DISCLOSED OR USED WITHOUT CARRIER CORPORATION'S WRITTEN CONSENT	SUBMISSION OF THESE DRAWINGS OR DOCUMENTS DOES NOT CONSTITUTE PART PERFORMANCE OR ACCEPTANCE OF CONTRACT	ANALOG CONTROL SEQUENCE 2209	45 JA,KA,QA

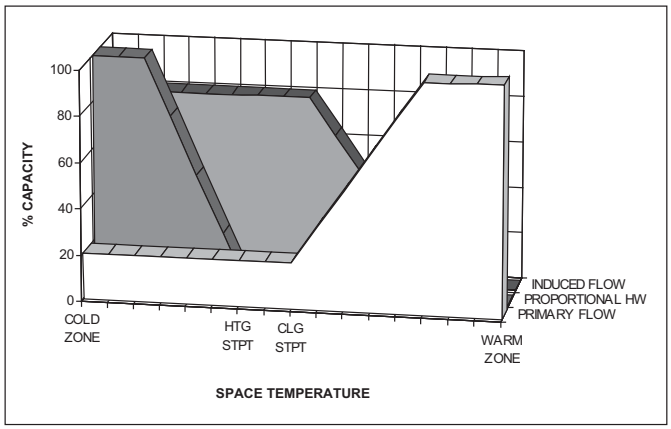

CONSTANT VOLUME FAN POWERED TERMINAL UNIT ANALOG CONTROL SEQUENCE 2209

Cooling With Proportional Hot Water Heat and Automatic Night Shutdown On Loss Of Primary Air

2209 — User defined primary air flow setpoints are maintained regardless of central system pressure, while terminal fan runs continuously. Minimum and Maximum air flow setpoints are adjusted at the room thermostat as opposed to the terminal controller, with a digital voltmeter (DVM). The thermostat output for minimum and maximum air flow setpoints range from 0-10vdc (0-3300 fpm).

Under load for cooling, primary air flow is at maximum when the occupied space is 2°F above the user defined cooling setpoint. Primary air flow should not exceed fan air flow setpoint. Primary air flow is proportionally reduced to the minimum air flow setpoint as room temperature approaches the cooling setpoint. As primary air flow is reduced, the constant volume terminal fan proportionally induces ceiling plenum return air or ducted return air, to maintain a constant volume of air to the occupied space.

Under a load for heating, a field supplied normally closed, proportional hot water valve will begin to open at the user defined heating setpoint. The hot water valve will be fully open at 1°F below the heating setpoint.

Unoccupied mode is in effect when the central air handling station serving primary air to the terminal, shuts down. Upon a signal loss of primary air at the terminals inlet probe, an air flow switch automatically shuts down the constant volume terminal fan.

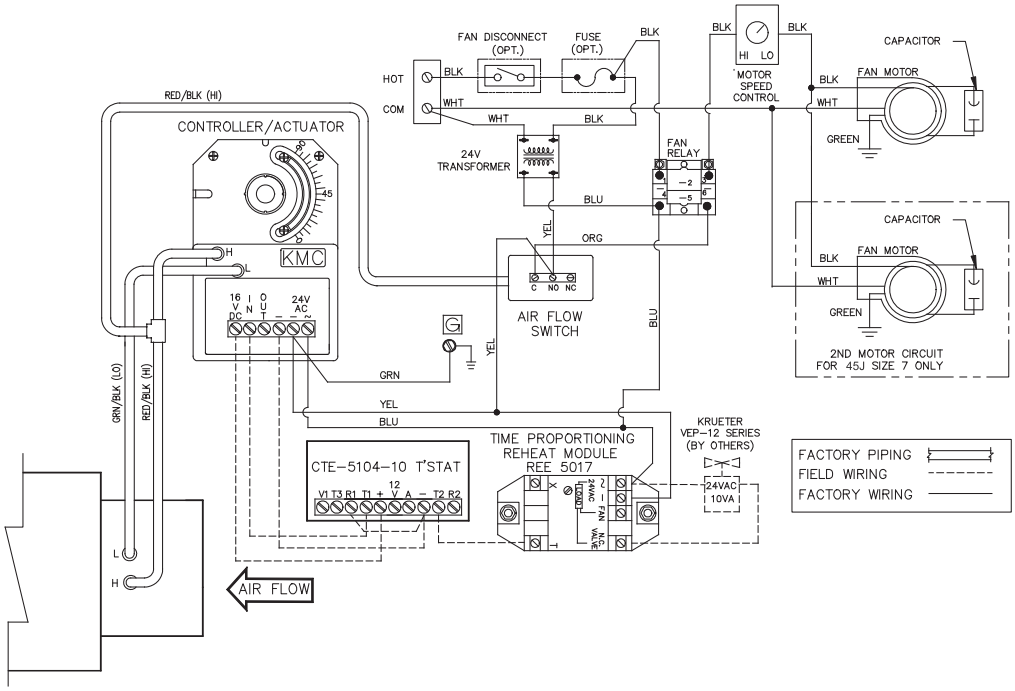

PRODUCT INFORMATION IS SUBJECT TO CHANGE WITHOUT NOTICE. 01/30/2003

JOB NAME	JOB NUMBER	LOCATION		DRAWING NUMBER
BUYER	BUYER #	REVISION	SHEET	45J/K/Q-A-2209

CODE CATALOG #	Carrier A United Technologies Company	THIS DOCUMENT IS THE PROPERTY OF CARRIER CORPORATION AND IS DELIVERED UPON THE EXPRESS CONDITION THAT THE CONTENTS WILL NOT BE DISCLOSED OR USED WITHOUT CARRIER CORPORATION'S WRITTEN CONSENT	SUBMISSION OF THESE DRAWINGS OR DOCUMENTS DOES NOT CONSTITUTE PART PERFORMANCE OR ACCEPTANCE OF CONTRACT	ANALOG CONTROL SEQUENCE 2210	45 JA,KA,QA

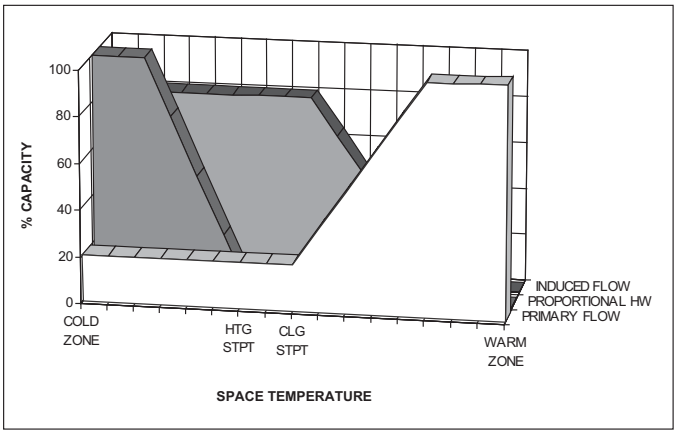

CONSTANT VOLUME FAN POWERED TERMINAL UNIT ANALOG CONTROL SEQUENCE 2210

Cooling With Proportional Hot Water Heat and Remote Night Shutdown

2210 — User defined primary air flow setpoints are maintained regardless of central system pressure, while terminal fan runs continuously. Minimum and Maximum air flow setpoints are adjusted at the room thermostat as opposed to the terminal controller, with a digital voltmeter (DVM). The thermostat output for minimum and maximum air flow setpoints range from 0-10vdc (0-3300 fpm).

Under load for cooling, primary air flow is at maximum when the occupied space is 2°F above the user defined cooling setpoint. Primary air flow should not exceed fan air flow setpoint. Primary air flow is proportionally reduced to the minimum air flow setpoint as room temperature approaches the cooling setpoint. As primary air flow is reduced, the constant volume terminal fan proportionally induces ceiling plenum return air or ducted return air, to maintain a constant volume of air to the occupied space.

Under a load for heating, a field supplied normally closed, proportional hot water valve will begin to open at the user defined heating setpoint. The hot water valve will be fully open at 1°F below the heating setpoint.

Unoccupied mode is in effect when the factory supplied 24vac fan relay is de-energized by a remote switch supplied by others. Upon a signal loss by the remote switch, the constant volume terminal fan shutsdown. The terminal unit fan must be de-energized after the central air source has shutdown and, re-energized before the central air source has started.

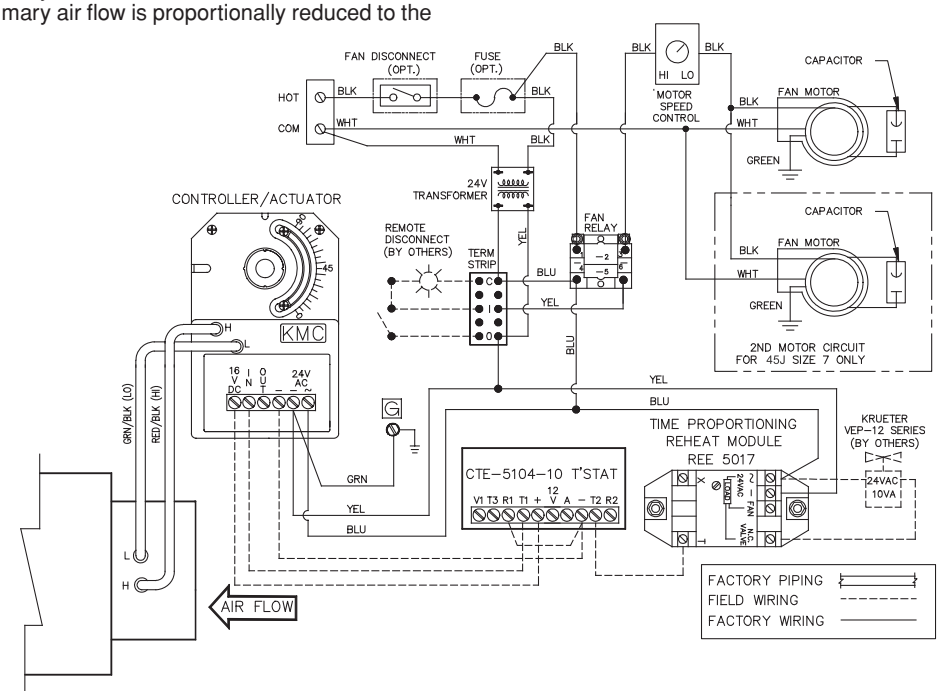

PRODUCT INFORMATION IS SUBJECT TO CHANGE WITHOUT NOTICE. 01/30/2003

JOB NAME	JOB NUMBER	LOCATION		DRAWING NUMBER
BUYER	BUYER #	REVISION	SHEET	45J/K/Q-A-2210

CODE	Carrier A United Technologies Company	THIS DOCUMENT IS THE PROPERTY OF CARRIER CORPORATION AND IS DELIVERED UPON THE EXPRESS CONDITION THAT THE CONTENTS WILL NOT BE DISCLOSED OR USED WITHOUT CARRIER CORPORATION'S WRITTEN CONSENT	SUBMISSION OF THESE DRAWINGS OR DOCUMENTS DOES NOT CONSTITUTE PART PERFORMANCE OR ACCEPTANCE OF CONTRACT	ANALOG CONTROL SEQUENCE 2211	45 JA,KA,QA
CATALOG #					

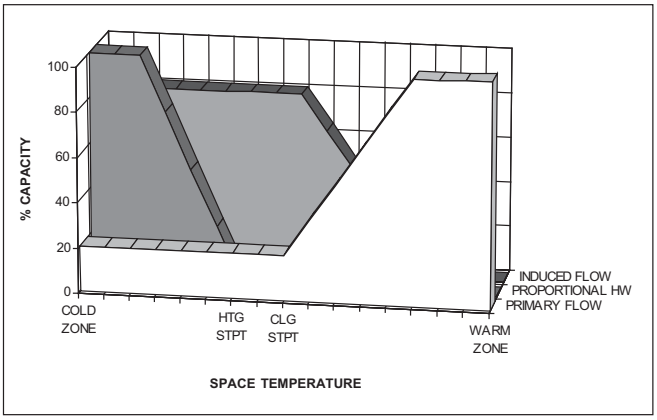

CONSTANT VOLUME FAN POWERED TERMINAL UNIT ANALOG CONTROL SEQUENCE 2211

Cooling With Proportional Hot Water Heat and Automatic Night Setback

2211 — User defined primary air flow setpoints are maintained regardless of central system pressure, while terminal fan runs continuously. Minimum and Maximum air flow setpoints are adjusted at the room thermostat as opposed to the terminal controller, with a digital voltmeter (DVM). The thermostat output for minimum and maximum air flow setpoints range from 0-10vdc (0-3300 fpm).

Under load for cooling, primary air flow is at maximum when the occupied space is 2°F above the user defined cooling setpoint. Primary air flow should not exceed fan air flow setpoint. Primary air flow is proportionally reduced to the minimum air flow setpoint as room temperature approaches the cooling setpoint. As primary air flow is reduced, the constant volume terminal fan proportionally induces ceiling plenum return air or ducted return air, to maintain a constant volume of air to the occupied space.

Under a load for heating, a field supplied normally closed, proportional hot water valve will begin to open at the user defined heating setpoint. The hot water valve will be fully open at 1°F below the heating setpoint.

Unoccupied mode is in effect when the central air handling station serving primary air to the terminal, shuts down. Upon a signal loss of primary air at the terminals inlet probe, an air flow switch automatically switches the terminal unit into the night setback mode. The night setback temperature setpoint is field adjustable. The constant volume fan will operate intermittently during night setback to maintain the user defined heating setback temperature.

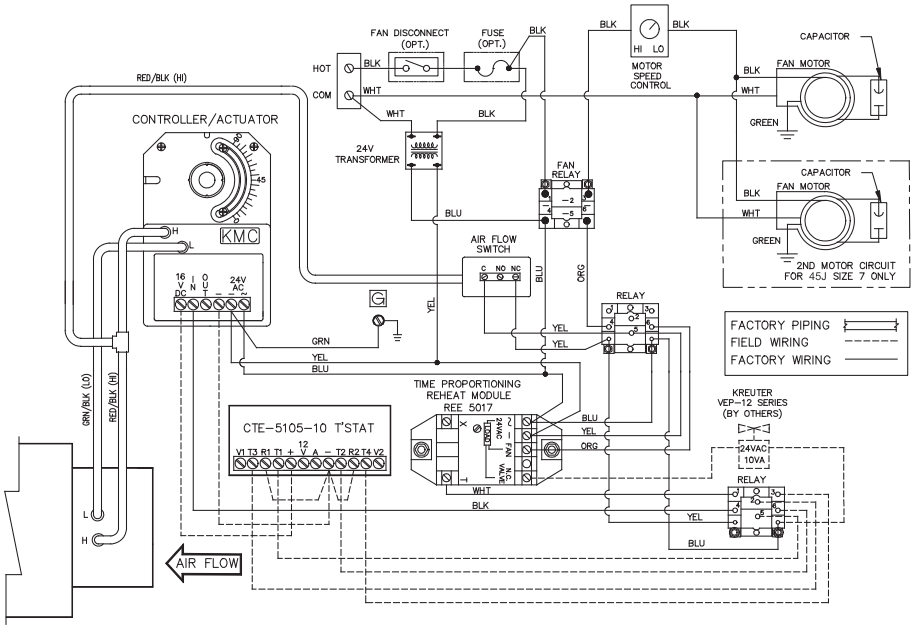

PRODUCT INFORMATION IS SUBJECT TO CHANGE WITHOUT NOTICE. 01/30/2003

JOB NAME	JOB NUMBER	LOCATION		DRAWING NUMBER
BUYER	BUYER #	REVISION	SHEET	45J/K/Q-A-2211

CODE CATALOG #	Carrier A United Technologies Company	THIS DOCUMENT IS THE PROPERTY OF CARRIER CORPORATION AND IS DELIVERED UPON THE EXPRESS CONDITION THAT THE CONTENTS WILL NOT BE DISCLOSED OR USED WITHOUT CARRIER CORPORATION'S WRITTEN CONSENT	SUBMISSION OF THESE DRAWINGS OR DOCUMENTS DOES NOT CONSTITUTE PART PERFORMANCE OR ACCEPTANCE OF CONTRACT	ANALOG CONTROL SEQUENCE 2212	45 JA,KA,QA

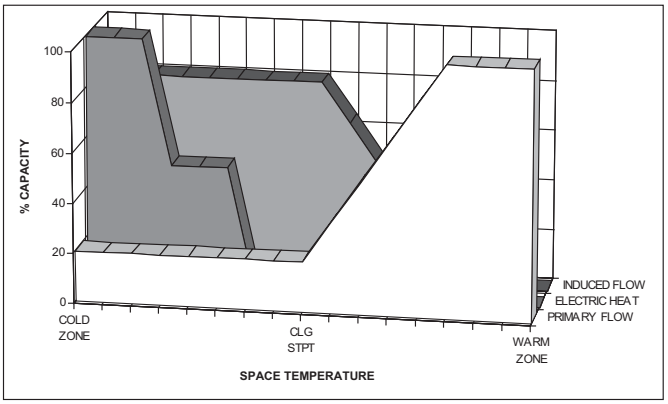

CONSTANT VOLUME FAN POWERED TERMINAL UNIT ANALOG CONTROL SEQUENCE 2212

Cooling With Up To 2-Stages Of Electric Heat

2212 — User defined primary air flow setpoints are maintained regardless of central system pressure, while terminal fan runs continuously. Minimum and Maximum air flow setpoints are adjusted at the room thermostat as opposed to the terminal controller, with a digital voltmeter (DVM). The thermostat output for minimum and maximum air flow setpoints range from 0-10vdc (0-3300 fpm).

Under load for cooling, primary air flow is at maximum when the occupied space is 2°F above the user defined temperature setpoint. Primary air flow should not exceed fan air flow setpoint. Primary air flow is proportionally reduced to the minimum air flow setpoint as room temperature approaches setpoint. As primary air flow is reduced, the constant volume terminal fan proportionally induces ceiling plenum return air or ducted return air, to maintain a constant volume of air to the occupied space.

Under a load for heating, staged on/off electric heat (up to 2-stages), will be sequentially initiated in response to the thermostat signal. The first stage of factory supplied electric heat will be energized at at .7°F below the user defined temperature setpoint. Upon a continued drop in space temperature, the second stage of electric heat will energize at 1.4°F below the temperature setpoint.

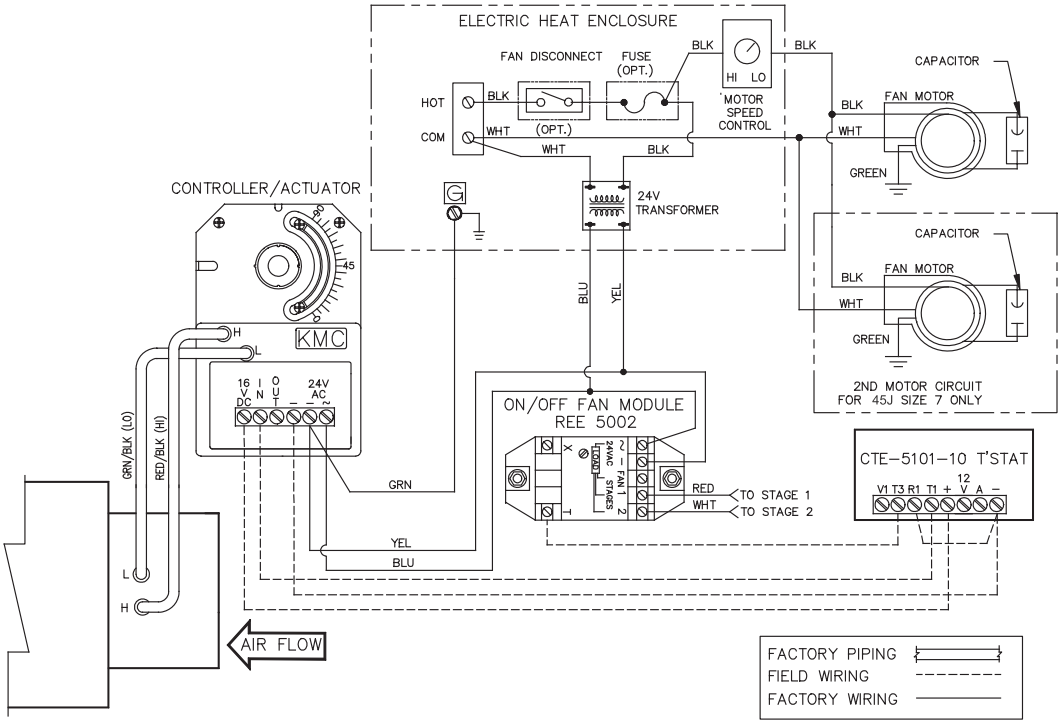

PRODUCT INFORMATION IS SUBJECT TO CHANGE WITHOUT NOTICE. 01/30/2003

JOB NAME	JOB NUMBER	LOCATION		DRAWING NUMBER
BUYER	BUYER #	REVISION	SHEET	45J/K/Q-A-2212

CODE CATALOG #	Carrier A United Technologies Company	THIS DOCUMENT IS THE PROPERTY OF CARRIER CORPORATION AND IS DELIVERED UPON THE EXPRESS CONDITION THAT THE CONTENTS WILL NOT BE DISCLOSED OR USED WITHOUT CARRIER CORPORATION'S WRITTEN CONSENT	SUBMISSION OF THESE DRAWINGS OR DOCUMENTS DOES NOT CONSTITUTE PART PERFORMANCE OR ACCEPTANCE OF CONTRACT	ANALOG CONTROL SEQUENCE 2213	45 JA,KA,QA

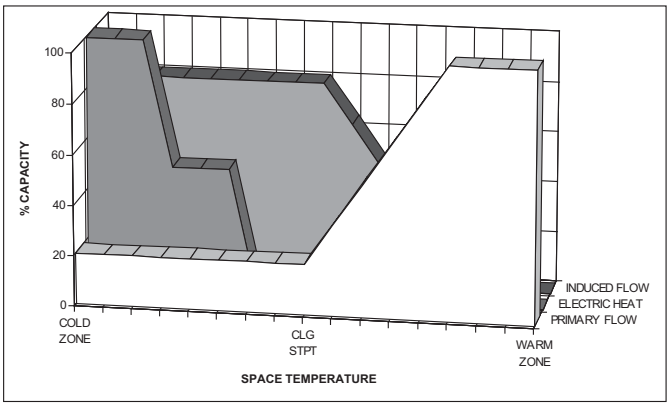

CONSTANT VOLUME FAN POWERED TERMINAL UNIT ANALOG CONTROL SEQUENCE 2213

Cooling With Up to 2-Stages of Electric Heat And Automatic Night Shutdown On Loss Of Primary Air

2213 — User defined primary air flow setpoints are maintained regardless of central system pressure, while terminal fan runs continuously. Minimum and Maximum air flow setpoints are adjusted at the room thermostat as opposed to the terminal controller, with a digital voltmeter (DVM). The thermostat output for minimum and maximum air flow setpoints range from 0-10vdc (0-3300 fpm).

Under load for cooling, primary air flow is at maximum when the occupied space is 2°F above the user defined temperature setpoint. Primary air flow should not exceed fan air flow setpoint. Primary air flow is proportionally reduced to the minimum air flow setpoint as room temperature approaches setpoint. As primary air flow is reduced, the constant volume terminal fan proportionally induces ceiling plenum return air or ducted return air, to maintain a constant volume of air to the occupied space.

Under a load for heating, staged on/off electric heat (up to 2-stages), will be sequentially initiated in response to the thermostat signal. The first stage of factory supplied electric heat will be energized at at .7°F below the user defined temperature setpoint. Upon a continued drop in space temperature, the second stage of electric heat will energize at 1.4°F below the temperature setpoint.

Unoccupied mode is in effect when the central air handling station serving primary air to the terminal, shuts down. Upon a signal loss of primary air at the terminals inlet probe, an air flow switch automatically shuts down the constant volume terminal fan.

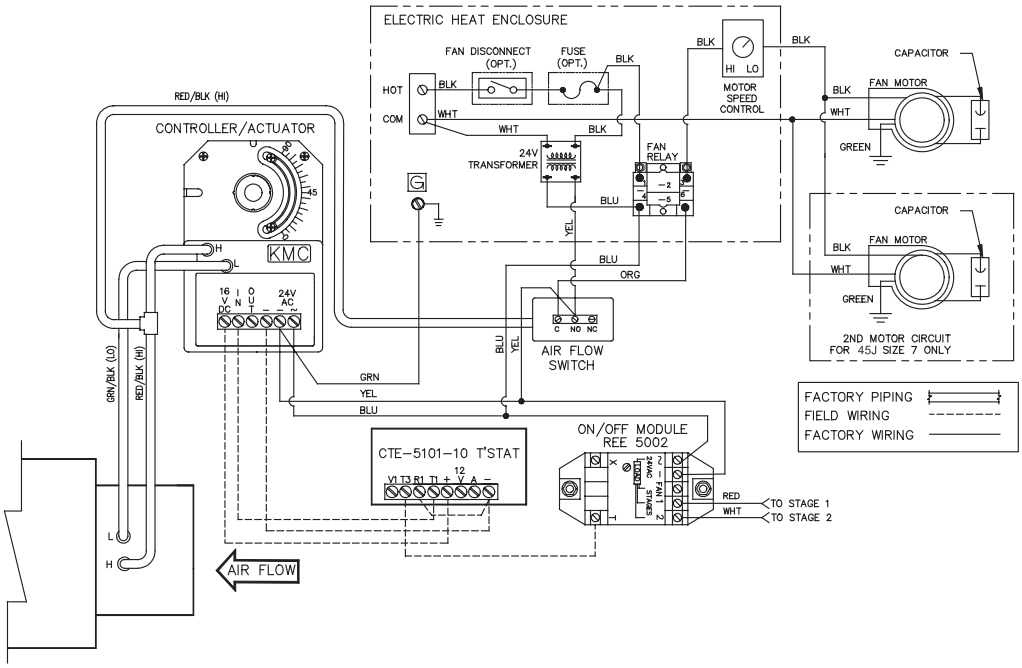

PRODUCT INFORMATION IS SUBJECT TO CHANGE WITHOUT NOTICE. 01/30/2003

JOB NAME	JOB NUMBER	LOCATION		DRAWING NUMBER
BUYER	BUYER #	REVISION	SHEET	45J/K/Q-A-2213

CODE CATALOG #	Carrier A United Technologies Company	THIS DOCUMENT IS THE PROPERTY OF CARRIER CORPORATION AND IS DELIVERED UPON THE EXPRESS CONDITION THAT THE CONTENTS WILL NOT BE DISCLOSED OR USED WITHOUT CARRIER CORPORATION'S WRITTEN CONSENT	SUBMISSION OF THESE DRAWINGS OR DOCUMENTS DOES NOT CONSTITUTE PART PERFORMANCE OR ACCEPTANCE OF CONTRACT	ANALOG CONTROL SEQUENCE 2214	45 JA,KA,QA

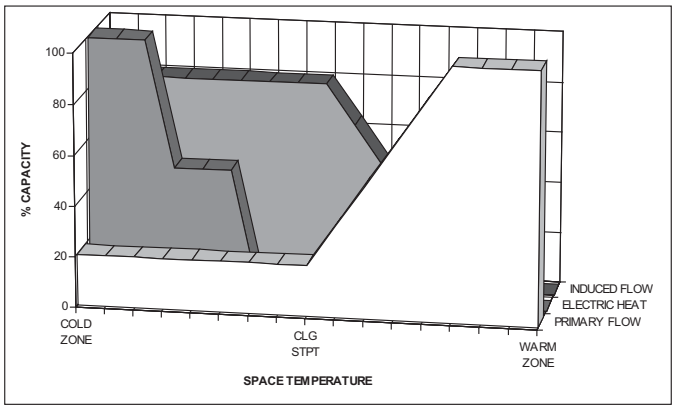

CONSTANT VOLUME FAN POWERED TERMINAL UNIT ANALOG CONTROL SEQUENCE 2214

Cooling With Up to 2-Stages of Electric Heat and Remote Night Shutdown

2214 — User defined primary air flow setpoints are maintained regardless of central system pressure, while terminal fan runs continuously. Minimum and Maximum air flow setpoints are adjusted at the room thermostat as opposed to the terminal controller, with a digital voltmeter (DVM). The thermostat output for minimum and maximum air flow setpoints range from 0-10vdc (0-3300 fpm).

Under load for cooling, primary air flow is at maximum when the occupied space is 2°F above the user defined temperature setpoint. Primary air flow should not exceed fan air flow setpoint. Primary air flow is proportionally reduced to the minimum air flow setpoint as room temperature approaches setpoint. As primary air flow is reduced, the constant volume terminal fan proportionally induces ceiling plenum return air or ducted return air, to maintain a constant volume of air to the occupied space.

Under a load for heating, staged on/off electric heat (up to 2-stages), will be sequentially initiated in response to the thermostat signal. The first stage of factory supplied electric heat will be energized at at .7°F below the user defined temperature setpoint. Upon a continued drop in space temperature, the second stage of electric heat will energize at 1.4°F below the temperature setpoint.

Unoccupied mode is in effect when the factory supplied 24vac fan relay is de-energized by a remote switch supplied by others. Upon a signal loss by the remote switch, the constant volume terminal fan shutsdown. The terminal unit fan must be de-energized after the central air source has shutdown and, re-energized before the central air source has started.

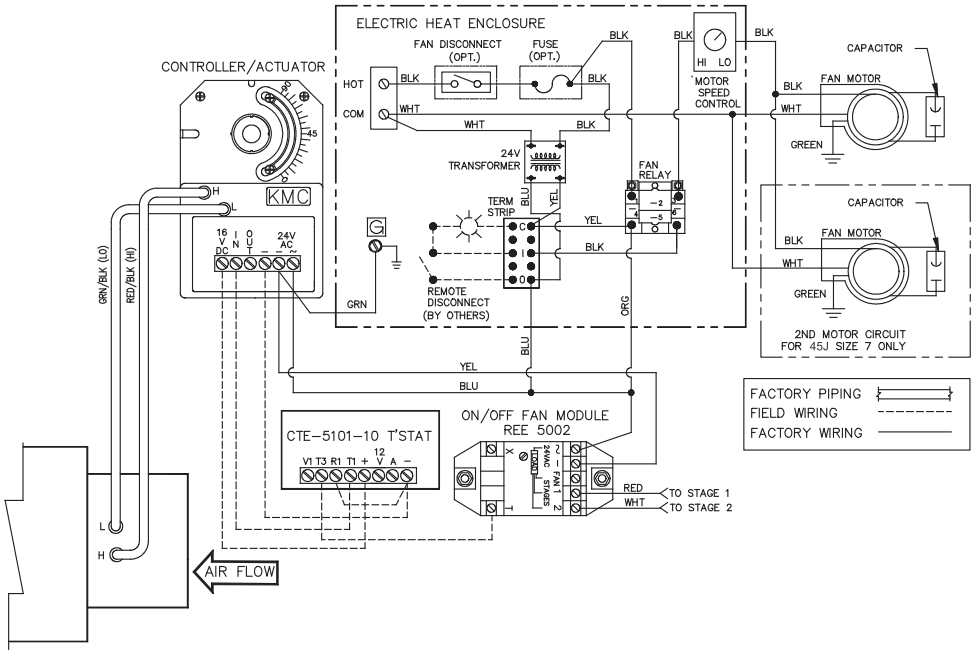

PRODUCT INFORMATION IS SUBJECT TO CHANGE WITHOUT NOTICE. 01/30/2003

JOB NAME	JOB NUMBER	LOCATION		DRAWING NUMBER
BUYER	BUYER #	REVISION	SHEET	45J/K/Q-A-2214

CODE CATALOG #	Carrier A United Technologies Company	THIS DOCUMENT IS THE PROPERTY OF CARRIER CORPORATION AND IS DELIVERED UPON THE EXPRESS CONDITION THAT THE CONTENTS WILL NOT BE DISCLOSED OR USED WITHOUT CARRIER CORPORATION'S WRITTEN CONSENT	SUBMISSION OF THESE DRAWINGS OR DOCUMENTS DOES NOT CONSTITUTE PART PERFORMANCE OR ACCEPTANCE OF CONTRACT	ANALOG CONTROL SEQUENCE 2215	45 JA,KA,QA

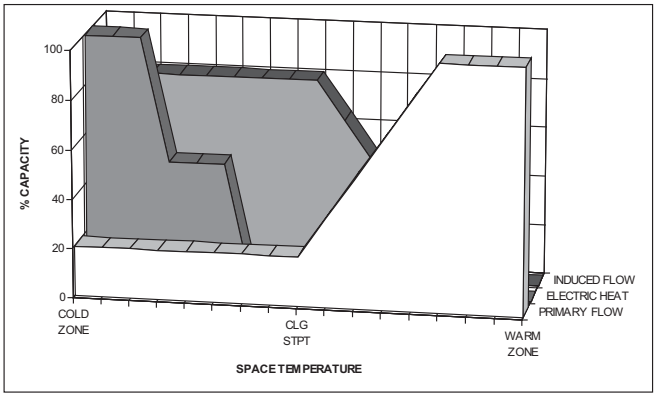

CONSTANT VOLUME FAN POWERED TERMINAL UNIT ANALOG CONTROL SEQUENCE 2215

Cooling With Up to 2 - Stages of Electric Heat and Automatic Night Setback

2215 — User defined primary air flow setpoints are maintained regardless of central system pressure, while terminal fan runs continuously. Minimum and Maximum air flow setpoints are adjusted at the room thermostat as opposed to the terminal controller, with a digital voltmeter (DVM). The thermostat output for minimum and maximum air flow setpoints range from 0-10vdc (0-3300 fpm).

Under load for cooling, primary air flow is at maximum when the occupied space is 2°F above the user defined temperature setpoint. Primary air flow should not exceed fan air flow setpoint. Primary air flow is proportionally reduced to the minimum air flow setpoint as room temperature approaches setpoint. As primary air flow is reduced, the constant volume terminal fan proportionally induces ceiling plenum return air or ducted return air, to maintain a constant volume of air to the occupied space.

Under a load for heating, staged on/off electric heat (up to 2-stages), will be sequentially initiated in response to the thermostat signal. The first stage of factory supplied electric heat will be energized at at .7°F below the user defined temperature setpoint. Upon a continued drop in space temperature, the second stage of electric heat will energize at 1.4°F below the temperature setpoint.

Unoccupied mode is in effect when the central air handling station serving primary air to the terminal, shuts down. Upon a signal loss of primary air at the terminals inlet probe, an air flow switch automatically swithes the terminal unit into the night setback mode. The night setback temperature setpoint is field adjustable. The constant volume fan will operate intermittently during night setback to maintain the user defined heating setback temperature.

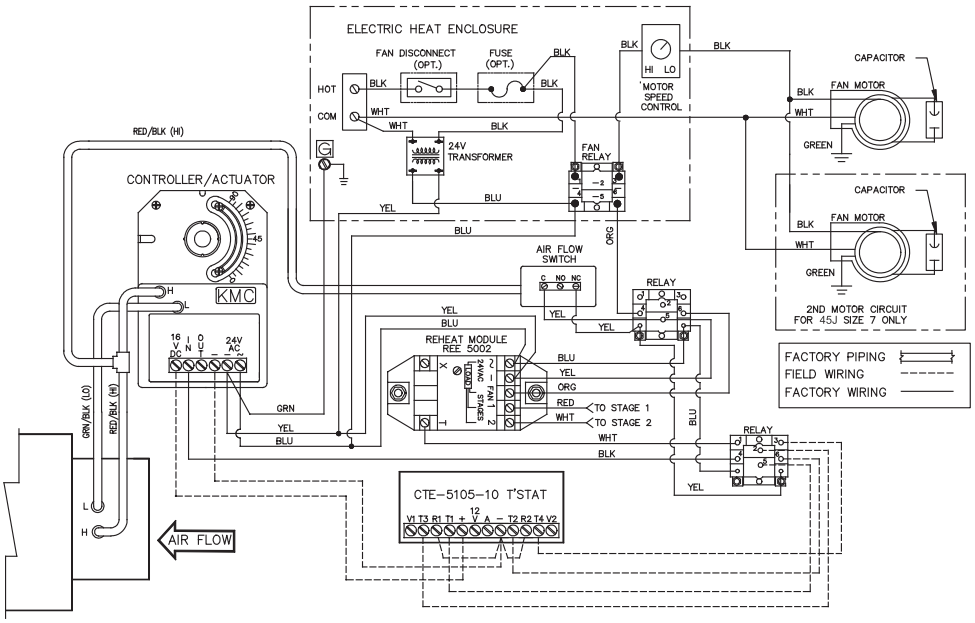

PRODUCT INFORMATION IS SUBJECT TO CHANGE WITHOUT NOTICE. 01/30/2003

JOB NAME	JOB NUMBER	LOCATION		DRAWING NUMBER
BUYER	BUYER #	REVISION	SHEET	45J/K/Q-A-2215

CODE CATALOG #	Carrier A United Technologies Company	THIS DOCUMENT IS THE PROPERTY OF CARRIER CORPORATION AND IS DELIVERED UPON THE EXPRESS CONDITION THAT THE CONTENTS WILL NOT BE DISCLOSED OR USED WITHOUT CARRIER CORPORATION'S WRITTEN CONSENT	SUBMISSION OF THESE DRAWINGS OR DOCUMENTS DOES NOT CONSTITUTE PART PERFORMANCE OR ACCEPTANCE OF CONTRACT	ANALOG CONTROL SEQUENCE 2215	45 JA,KA,QA

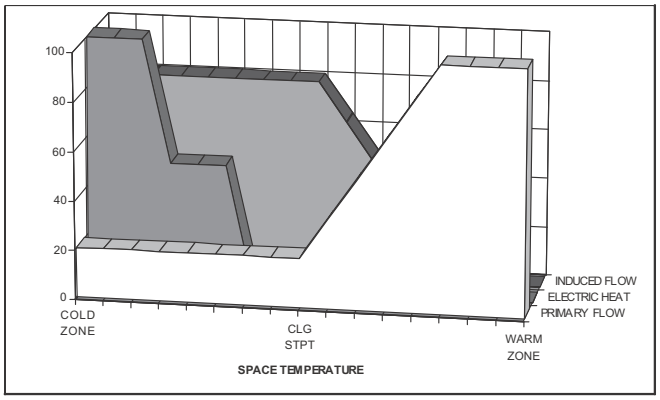

CONSTANT VOLUME FAN POWERED TERMINAL UNIT ANALOG CONTROL SEQUENCE 2216

Cooling With Up to 2 - Stages of Electric Heat and Morning Warm Up

2216 — User defined primary air flow setpoints are maintained regardless of central system pressure, while terminal fan runs continuously. Minimum and Maximum air flow setpoints are adjusted at the room thermostat as opposed to the terminal controller, with a digital voltmeter (DVM). The thermostat output for minimum and maximum air flow setpoints range from 0-10vdc (0-3300 fpm).

Under load for cooling, primary air flow is at maximum when the occupied space is 2° F above the user defined temperature setpoint. Primary air flow should not exceed fan air flow setpoint. Primary air flow is proportionally reduced to the minimum air flow setpoint as room temperature approaches setpoint. As primary air flow is reduced, the constant volume terminal fan proportionally induces ceiling plenum return air or ducted return air, to maintain a constant volume of air to the occupied space.

Under a load for heating, staged on/off electric heat (up to 2-stages), will be sequentially initiated in response to the thermostat signal. The first stage of factory supplied electric heat will be energized at at .7° F below the user defined temperature setpoint. Upon a continued drop in space temperature, the second stage of electric heat will energize at 1.4°F below the temperature setpoint.

Automatic changeover for morning warm-up is in effect when the central air handling station delivers primary air at 77°F (± 4° F) or greater. The warm primary air automatically changes the dual setpoint thermostat from cooling (DA) to heating (DA) through use of a factory mounted inlet duct sensor, cooling (DA) control is resumed upon the primary air temperature decreasing below 77°F.

Unoccupied mode is in effect when the central air handling station serving primary air to the terminal, shuts down. Upon a signal loss of primary air at the terminals inlet probe, an air flow switch automatically switches the terminal unit into the night setback mode. The night setback temperature setpoint is field adjustable. The constant volume fan will operate intermittently during night setback to maintain the user defined heating setback temperature.

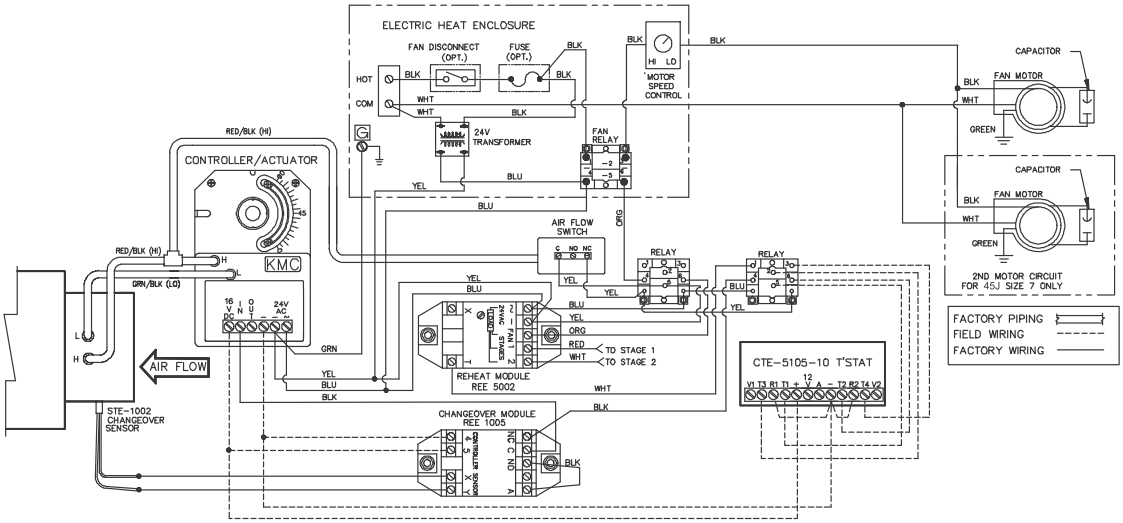

PRODUCT INFORMATION IS SUBJECT TO CHANGE WITHOUT NOTICE. 01/30/2003

JOB NAME	JOB NUMBER	LOCATION		DRAWING NUMBER
BUYER	BUYER #	REVISION	SHEET	45J/K/Q-A-2216

CODE CATALOG #	Carrier A United Technologies Company	THIS DOCUMENT IS THE PROPERTY OF CARRIER CORPORATION AND IS DELIVERED UPON THE EXPRESS CONDITION THAT THE CONTENTS WILL NOT BE DISCLOSED OR USED WITHOUT CARRIER CORPORATION'S WRITTEN CONSENT.	SUBMISSION OF THESE DRAWINGS OR DOCUMENTS DOES NOT CONSTITUTE PART PERFORMANCE OR ACCEPTANCE OF CONTRACT.	ANALOG CONTROL SEQUENCE 2218	45 JA,KA,QA

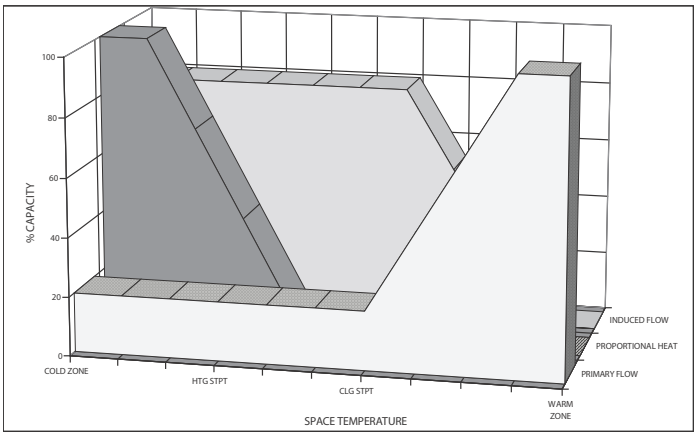

CONSTANT VOLUME FAN POWERED TERMINAL UNIT CONTROL CARRIER CONTROL PACKAGE NO. 2218

Cooling with Solid-State Proportional Heat Control (Discharge Temperature Sensor Optional)

User defined primary airflow set points are maintained independent of central system pressure, while terminal fan runs continuously. Minimum and maximum airflow set points are adjusted at the room thermostat with a digital voltmeter (DVM). The thermostat output for minimum and maximum airflow set points ranges from 0 to 10 vdc (0 to 3300 fpm).

Under load for cooling, primary airflow is at maximum when the occupied space is 2°F above the user defined cooling temperature set point. Primary airflow is proportionally reduced to the minimum airflow set point as room temperature approaches set point. As primary airflow is reduced, the constant volume terminal fan proportionally induces ceiling plenum return air or ducted return air, to maintain a constant volume of air to the occupied space.

Under a load for heating, the solid-state regulated electric heater will be initiated in response to thermostat signal. Minimum heating will start approximately at 0.4°F below heating set point. As the space temperature continues to decrease, the percent of electric heat output will proportionately increase in 1% increments. At the heating set point, the heater output will be 38% maximum, and will reach 100% at 1°F below heating set point. With the proportional heat discharge temperature sensor option, the heated air is set to a maximum temperature set point to ensure proper mixing of air for the ventilation cfm and to prevent space temperature stratification. When using the discharge temperature sensor, the proportional heat control proportionally modulates temperature between system's temperature before heating and maximum temperature set point.

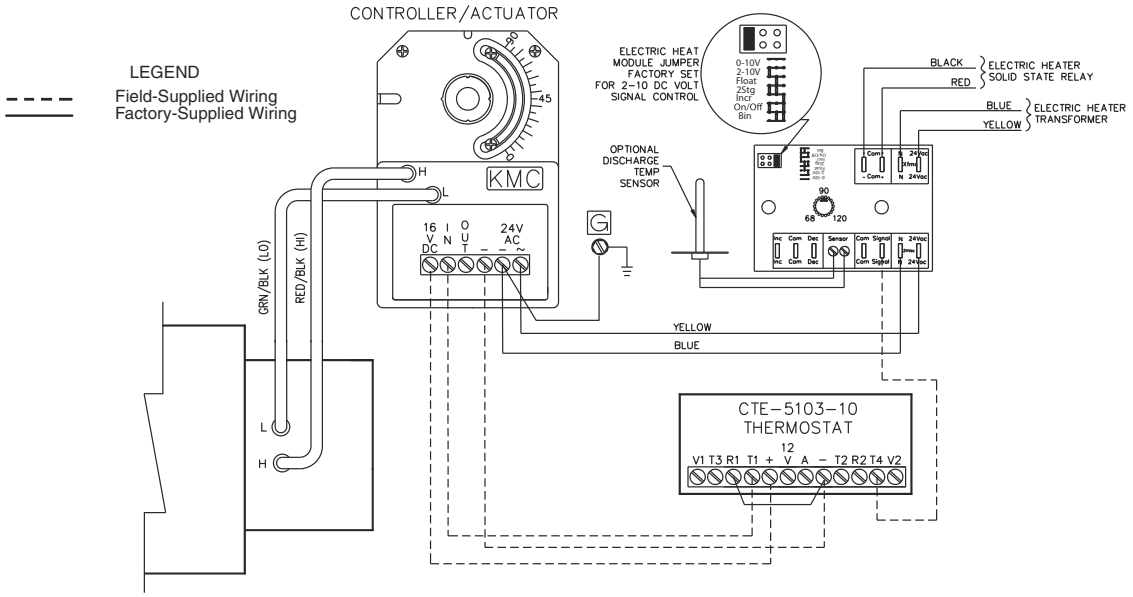

PRODUCT INFORMATION IS SUBJECT TO CHANGE WITHOUT NOTICE. 01/15/2009

JOB NAME	JOB NUMBER	LOCATION	PAGE NUMBER	DRAWING NUMBER
BUYER	BUYER #	SHEET	1 OF 1	45J/K/Q-A-2218

CODE	Carrier A United Technologies Company	THIS DOCUMENT IS THE PROPERTY OF CARRIER CORPORATION AND IS DELIVERED UPON THE EXPRESS CONDITION THAT THE CONTENTS WILL NOT BE DISCLOSED OR USED WITHOUT CARRIER CORPORATION'S WRITTEN CONSENT	SUBMISSION OF THESE DRAWINGS OR DOCUMENTS DOES NOT CONSTITUTE PART PERFORMANCE OR ACCEPTANCE OF CONTRACT	ANALOG CONTROL SEQUENCE 2300	45 MA,NA,RA
CATALOG #					

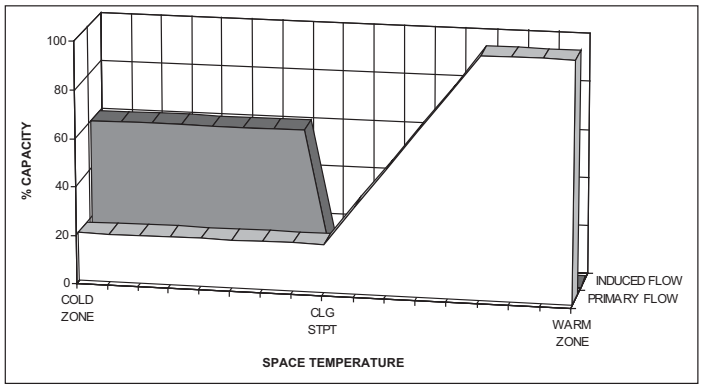

VARIABLE VOLUME FAN POWERED TERMINAL UNIT ANALOG CONTROL SEQUENCE 2300

Cooling With Sequenced Fan

2300 — User defined primary air flow setpoints are maintained regardless of central system pressure. The terminal fan runs intermittently, during a requirement for heat. Minimum and Maximum primary air flow setpoints are adjusted at the room thermostat as opposed to the terminal controller, with a digital voltmeter (DVM). The thermostat output for minimum and maximum air flow setpoints range from 0-10vdc (0-3300 fpm).

Under load for cooling, primary air flow is at maximum when the occupied space is 2° F above the user defined temperature setpoint. Primary air flow is reduced to the minimum air flow setpoint in proportion to space temperature approaching space temperature setpoint.

Under a load for heating, the terminal fan is energized. The terminal fan start point is field adjustable with reference to space temperature offset from space temperature setpoint.

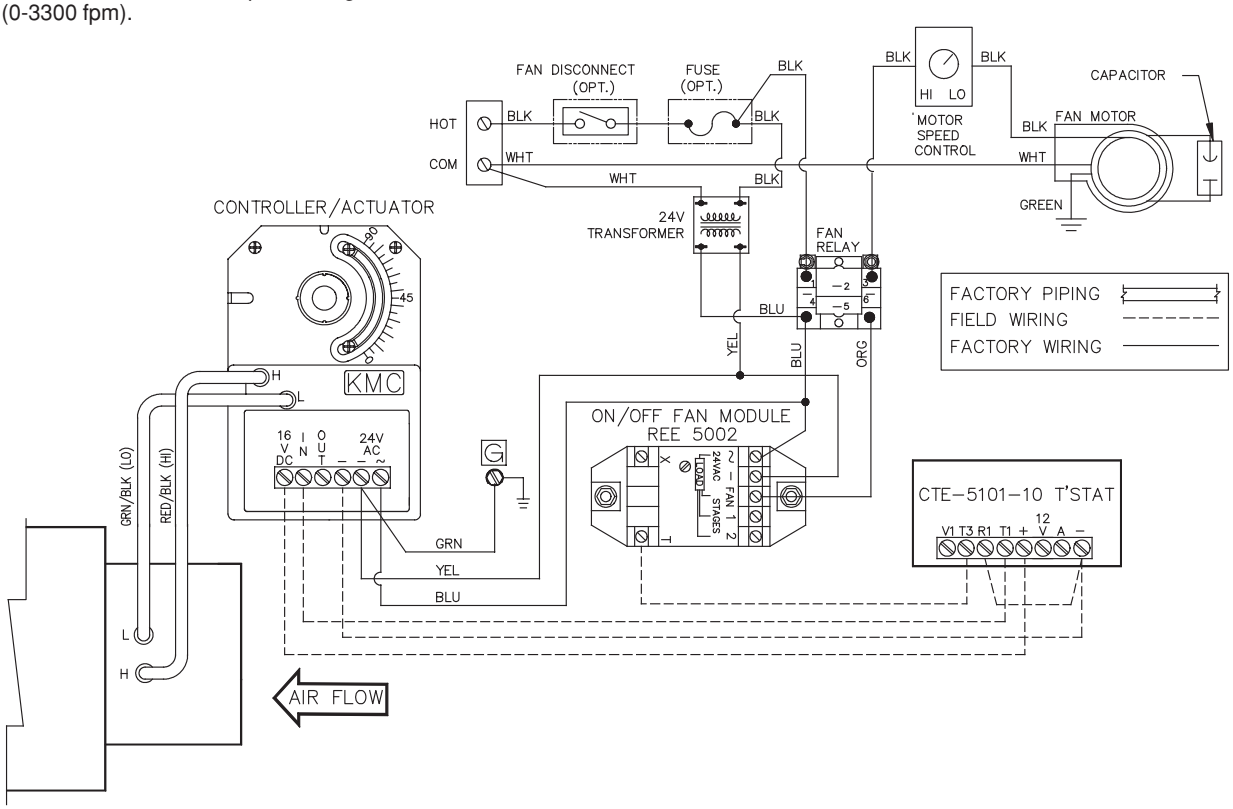

PRODUCT INFORMATION IS SUBJECT TO CHANGE WITHOUT NOTICE. 01/30/2003

JOB NAME	JOB NUMBER	LOCATION		DRAWING NUMBER
BUYER	BUYER #	REVISION	SHEET	45M/N/R-A-2300

CODE / CATALOG #	Carrier — A United Technologies Company	THIS DOCUMENT IS THE PROPERTY OF CARRIER CORPORATION AND IS DELIVERED UPON THE EXPRESS CONDITION THAT THE CONTENTS WILL NOT BE DISCLOSED OR USED WITHOUT CARRIER CORPORATION'S WRITTEN CONSENT	SUBMISSION OF THESE DRAWINGS OR DOCUMENTS DOES NOT CONSTITUTE PART PERFORMANCE OR ACCEPTANCE OF CONTRACT	ANALOG CONTROL SEQUENCE 2301	45 MA,NA,RA

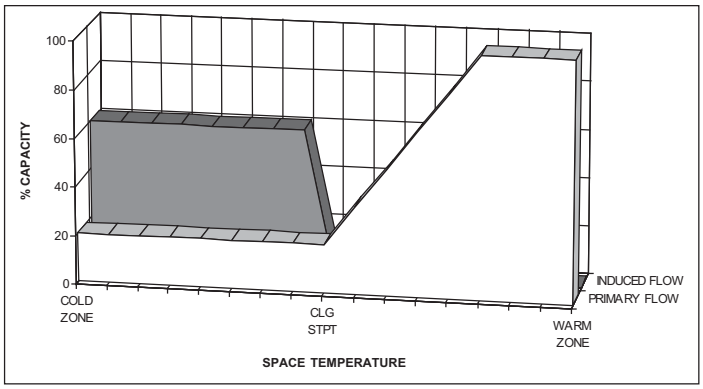

VARIABLE VOLUME FAN POWERED TERMINAL UNIT ANALOG CONTROL SEQUENCE 2301

Cooling With Sequenced Fan and Automatic Night Shutdown

2301 — User defined primary air flow setpoints are maintained regardless of central system pressure. The terminal fan runs intermittently, during a requirement for heat. Minimum and Maximum primary air flow setpoints are adjusted at the room thermostat as opposed to the terminal controller, with a digital voltmeter (DVM). The thermostat output for minimum and maximum air flow setpoints range from 0-10vdc (0-3300 fpm).

Under load for cooling, primary air flow is at maximum when the occupied space is 2°F above the user defined temperature setpoint. Primary air flow is reduced to the minimum air flow setpoint in proportion to space temperature approaching space temperature setpoint.

Under a load for heating, the terminal fan is energized. The terminal fan start point is field adjustable with reference to space temperature offset from space temperature setpoint.

Unoccupied mode is in effect when the central air handling station serving primary air to the terminal, shuts down. Upon a signal loss of primary air at the terminals inlet probe, an air flow switch automatically shuts down the terminal unit fan.

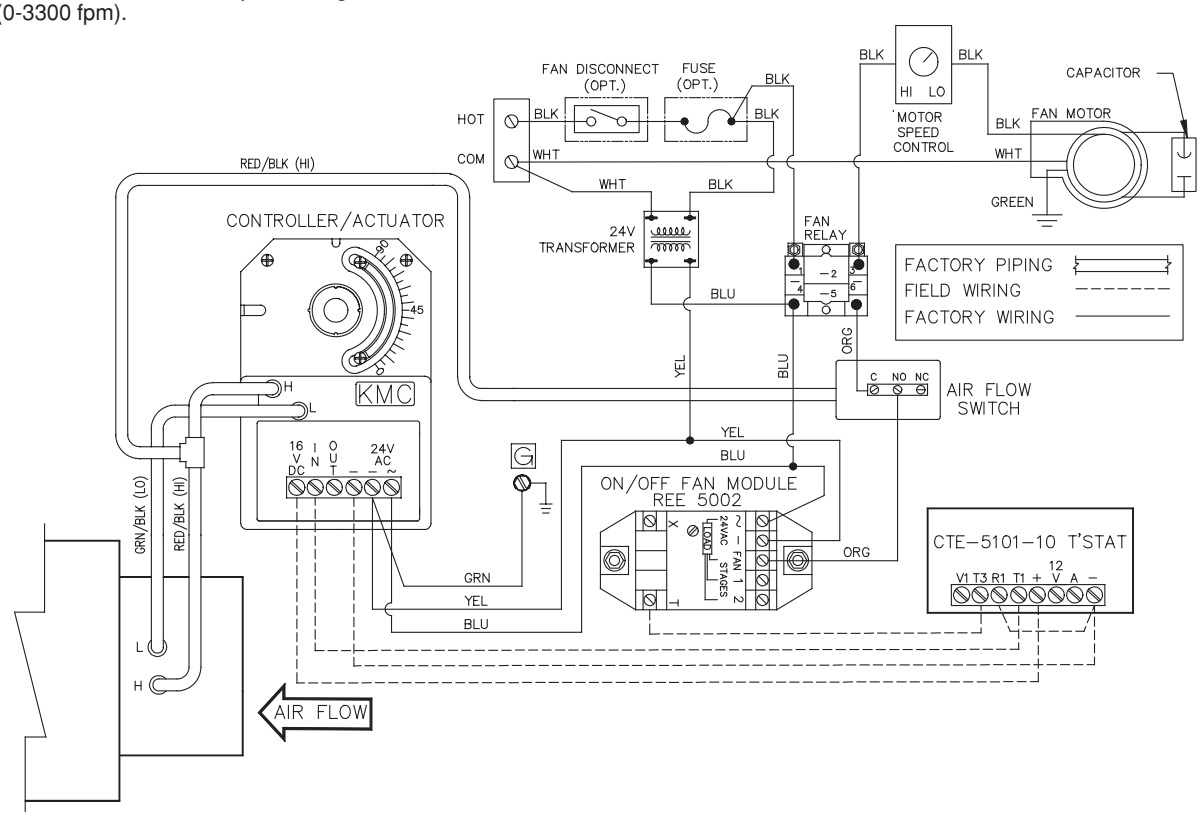

PRODUCT INFORMATION IS SUBJECT TO CHANGE WITHOUT NOTICE. 01/30/2003

JOB NAME	JOB NUMBER	LOCATION		DRAWING NUMBER
BUYER	BUYER #	REVISION	SHEET	45M/N/R-A-2301

CODE CATALOG #	Carrier A United Technologies Company	THIS DOCUMENT IS THE PROPERTY OF CARRIER CORPORATION AND IS DELIVERED UPON THE EXPRESS CONDITION THAT THE CONTENTS WILL NOT BE DISCLOSED OR USED WITHOUT CARRIER CORPORATION'S WRITTEN CONSENT	SUBMISSION OF THESE DRAWINGS OR DOCUMENTS DOES NOT CONSTITUTE PART PERFORMANCE OR ACCEPTANCE OF CONTRACT	ANALOG CONTROL SEQUENCE 2302	45 MA,NA,RA

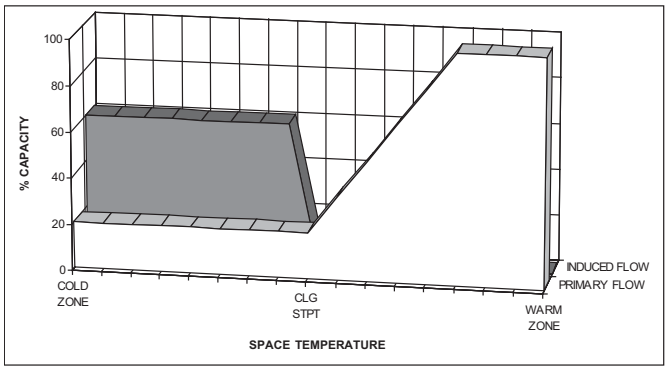

VARIABLE VOLUME FAN POWERED TERMINAL UNIT ANALOG CONTROL SEQUENCE 2302

Cooling With Sequenced Fan and Automatic Night Setback

2302 — User defined primary air flow setpoints are maintained regardless of central system pressure. The terminal fan runs intermittently, during a requirement for heat. Minimum and Maximum primary air flow setpoints are adjusted at the room thermostat as opposed to the terminal controller, with a digital voltmeter (DVM). The thermostat output for minimum and maximum air flow setpoints range from 0-10vdc (0-3300 fpm).

Under load for cooling, primary air flow is at maximum when the occupied space is 2°F above the user defined temperature setpoint. Primary air flow is reduced to the minimum air flow setpoint in proportion to space temperature approaching space temperature setpoint.

Under a load for heating, the terminal fan is energized. The terminal fan start point is field adjustable with reference to space temperature offset from space temperature setpoint.

Unoccupied mode is in effect when the central air handling station serving primary air to the terminal, shuts down. Upon a signal loss of primary air at the terminals inlet probe, an air flow switch automatically switches the terminal unit into the night setback mode. The night setback temperature setpoint is field adjustable. The terminal unit fan will operate intermittently during night setback to maintain the user defined heating setback temperature.

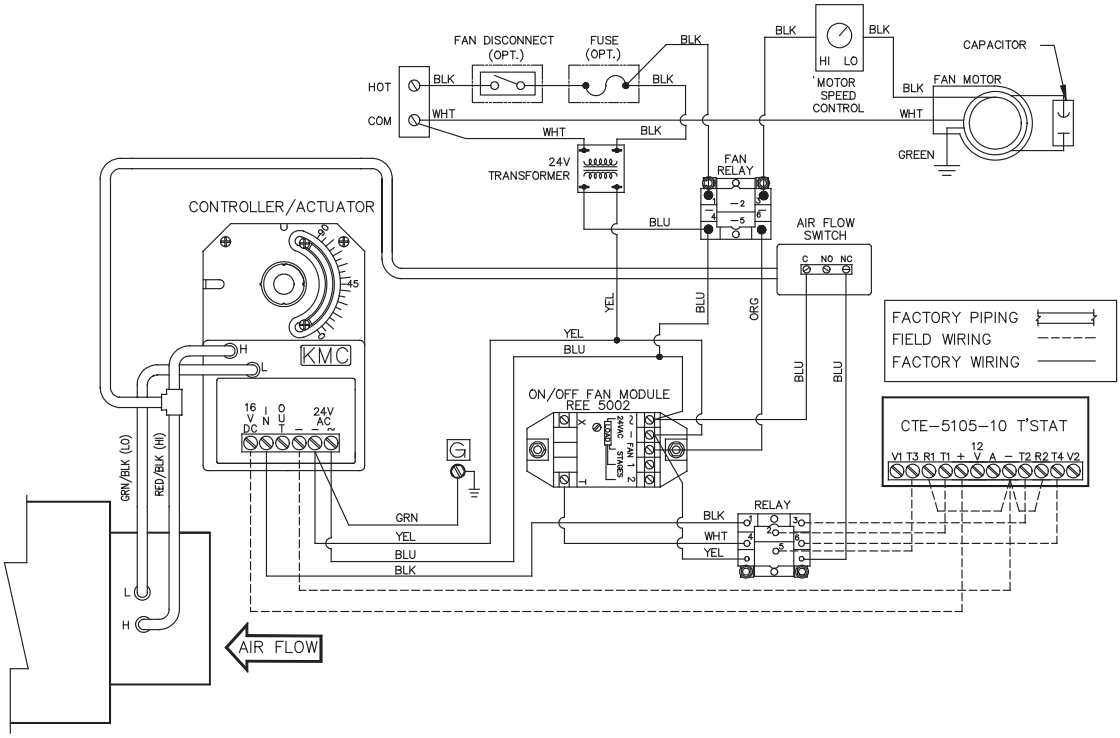

PRODUCT INFORMATION IS SUBJECT TO CHANGE WITHOUT NOTICE. 01/30/2003

JOB NAME	JOB NUMBER	LOCATION		DRAWING NUMBER
BUYER	BUYER #	REVISION	SHEET	45M/N/R-A-2302

CODE / CATALOG #	Carrier — A United Technologies Company	THIS DOCUMENT IS THE PROPERTY OF CARRIER CORPORATION AND IS DELIVERED UPON THE EXPRESS CONDITION THAT THE CONTENTS WILL NOT BE DISCLOSED OR USED WITHOUT CARRIER CORPORATION'S WRITTEN CONSENT	SUBMISSION OF THESE DRAWINGS OR DOCUMENTS DOES NOT CONSTITUTE PART PERFORMANCE OR ACCEPTANCE OF CONTRACT	ANALOG CONTROL SEQUENCE 2303	45 MA,NA,RA

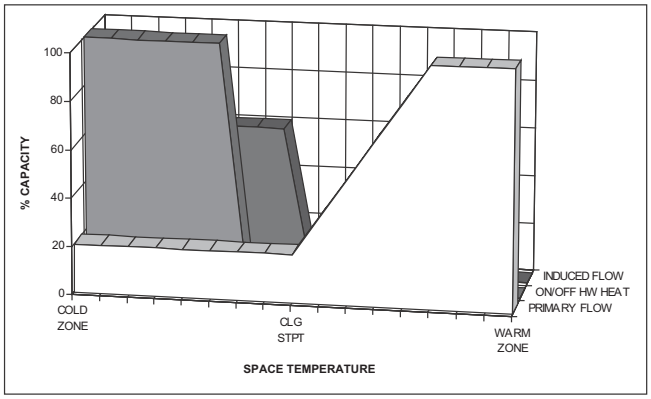

VARIABLE VOLUME FAN POWERED TERMINAL UNIT ANALOG CONTROL SEQUENCE 2303

Cooling With Sequenced Fan and On/Off Hot Water Heat

2303 — User defined primary air flow setpoints are maintained regardless of central system pressure. The terminal fan runs intermittently, during a requirement for heat. Minimum and Maximum primary air flow setpoints are adjusted at the room thermostat as opposed to the terminal controller, with a digital voltmeter (DVM). The thermostat output for minimum and maximum air flow setpoints range from 0-10vdc (0-3300 fpm).

Under load for cooling, primary air flow is at maximum when the occupied space is 2°F above the user defined temperature setpoint. Primary air flow is reduced to the minimum air flow setpoint in proportion to space temperature approaching space temperature setpoint.

Under a load for heating, the terminal fan is energized. The terminal fan start point is field adjustable with reference to space temperature offset from space temperature setpoint. A field supplied on/off hot water valve will be energized at .7°F below the user defined temperature setpoint. In order to apply a normally open hot water valve a field supplied reversing relay must be applied to the circuit. The normally closed hot water valve should not exceed 10 va at 24 vac.

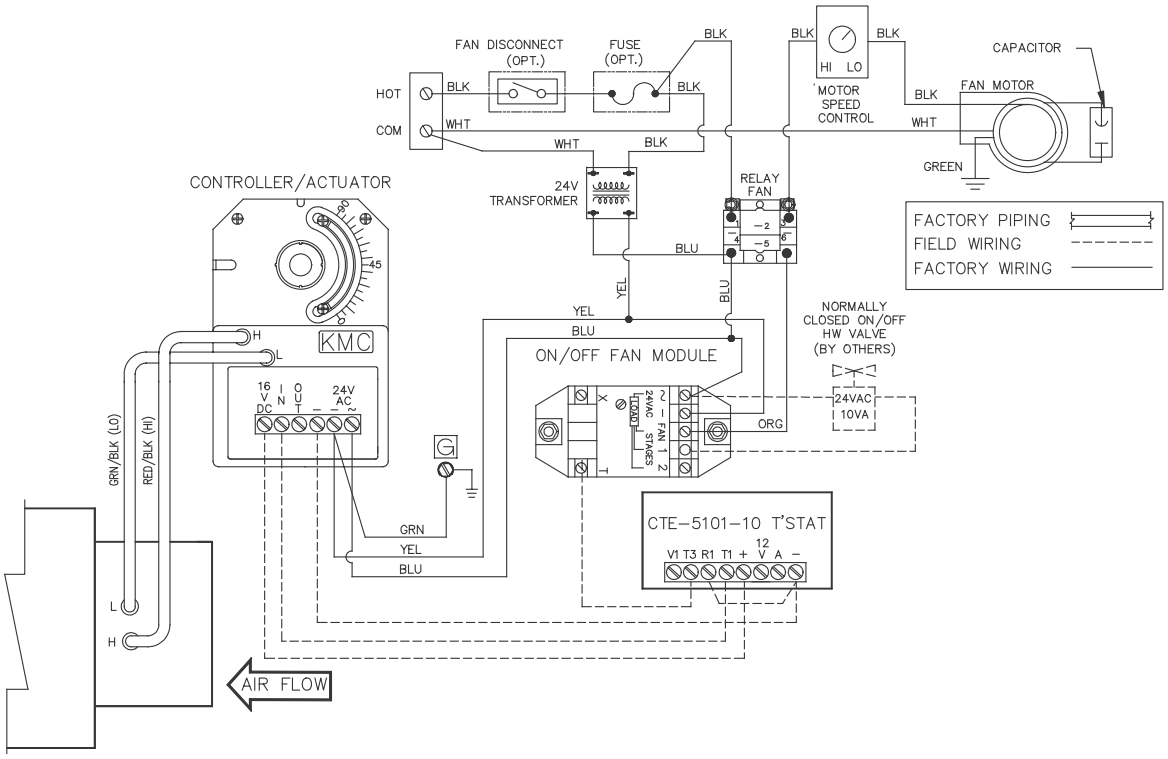

PRODUCT INFORMATION IS SUBJECT TO CHANGE WITHOUT NOTICE. 01/30/2003

JOB NAME	JOB NUMBER	LOCATION		DRAWING NUMBER
BUYER	BUYER #	REVISION	SHEET	45M/N/R-A-2303

CODE CATALOG #	Carrier A United Technologies Company	THIS DOCUMENT IS THE PROPERTY OF CARRIER CORPORATION AND IS DELIVERED UPON THE EXPRESS CONDITION THAT THE CONTENTS WILL NOT BE DISCLOSED OR USED WITHOUT CARRIER CORPORATION'S WRITTEN CONSENT	SUBMISSION OF THESE DRAWINGS OR DOCUMENTS DOES NOT CONSTITUTE PART PERFORMANCE OR ACCEPTANCE OF CONTRACT	ANALOG CONTROL SEQUENCE 2304	45 MA,NA,RA

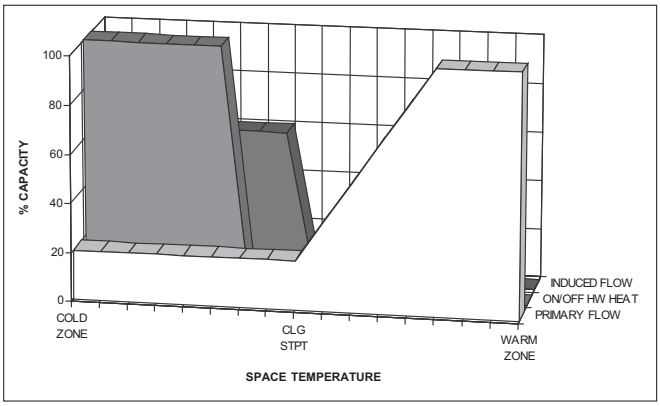

VARIABLE VOLUME FAN POWERED TERMINAL UNIT ANALOG CONTROL SEQUENCE 2304

Cooling With Sequenced Fan, On/Off Hot Water Heat, and Automatic Night Shutdown

2304 — User defined primary air flow setpoints are maintained regardless of central system pressure. The terminal fan runs intermittently, during a requirement for heat. Minimum and Maximum primary air flow setpoints are adjusted at the room thermostat as opposed to the terminal controller, with a digital voltmeter (DVM). The thermostat output for minimum and maximum air flow setpoints range from 0-10vdc (0-3300 fpm).

Under load for cooling, primary air flow is at maximum when the occupied space is 2°F above the user defined temperature setpoint. Primary air flow is reduced to the minimum air flow setpoint in proportion to space temperature approaching space temperature setpoint.

Under a load for heating, the terminal fan is energized. The terminal fan start point is field adjustable with reference to space temperature offset from space temperature setpoint. A field supplied on/off hot water valve will be energized at .7°F below the user defined temperature setpoint. In order to apply a normally open hot water valve a field supplied reversing relay must be applied to the circuit. The normally closed hot water valve should not exceed 10 va at 24 vac.

Unoccupied mode is in effect when the central air handling station serving primary air to the terminal, shuts down. Upon a signal loss of primary air at the terminals inlet probe, an air flow switch automatically shuts down the terminal unit fan.

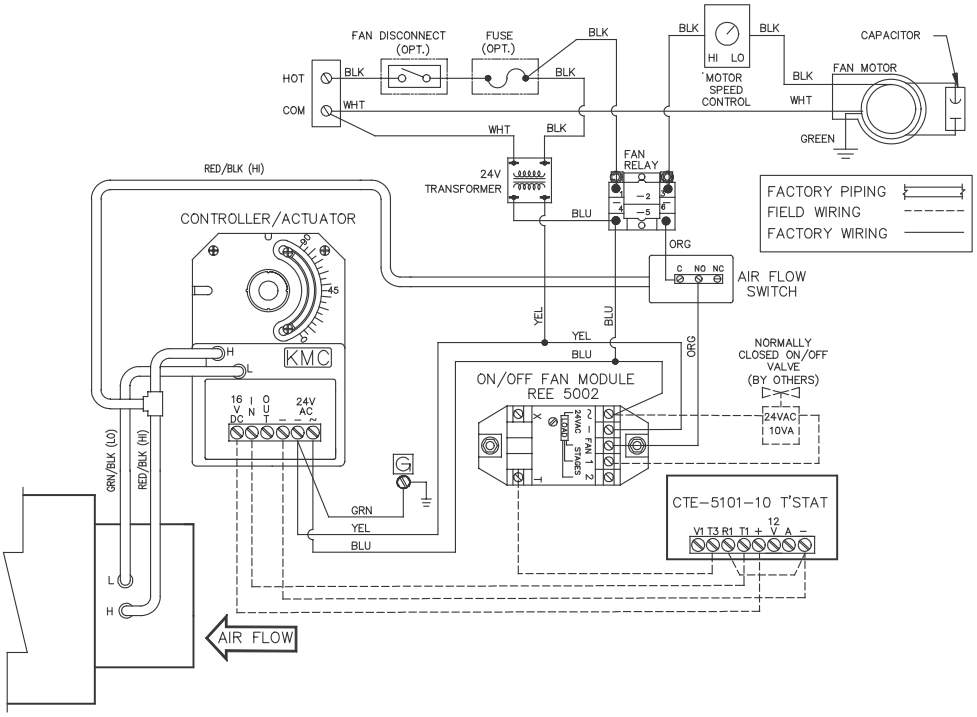

PRODUCT INFORMATION IS SUBJECT TO CHANGE WITHOUT NOTICE. 01/30/2003

JOB NAME	JOB NUMBER	LOCATION		DRAWING NUMBER
BUYER	BUYER #	REVISION	SHEET	45M/N/R-A-2304

CODE CATALOG #	Carrier A United Technologies Company	THIS DOCUMENT IS THE PROPERTY OF CARRIER CORPORATION AND IS DELIVERED UPON THE EXPRESS CONDITION THAT THE CONTENTS WILL NOT BE DISCLOSED OR USED WITHOUT CARRIER CORPORATION'S WRITTEN CONSENT	SUBMISSION OF THESE DRAWINGS OR DOCUMENTS DOES NOT CONSTITUTE PART PERFORMANCE OR ACCEPTANCE OF CONTRACT	ANALOG CONTROL SEQUENCE 2305	45 MA,NA,RA

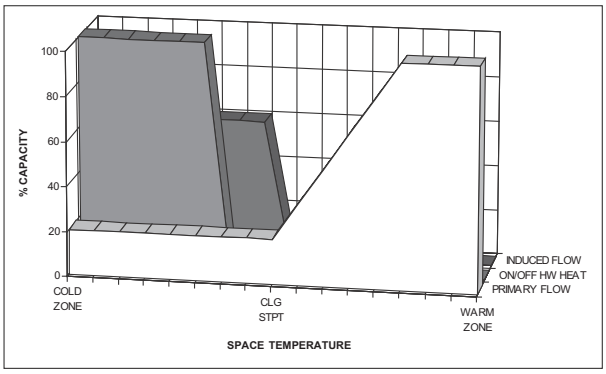

VARIABLE VOLUME FAN POWERED TERMINAL UNIT ANALOG CONTROL SEQUENCE 2305

Cooling With Sequenced Fan, On/Off Hot Water Heat, and Automatic Night Setback

2305 — User defined primary air flow setpoints are maintained regardless of central system pressure. The terminal fan runs intermittently, during a requirement for heat. Minimum and Maximum primary air flow setpoints are adjusted at the room thermostat as opposed to the terminal controller, with a digital voltmeter (DVM). The thermostat output for minimum and maximum air flow setpoints range from 0-10vdc (0-3300 fpm).

Under load for cooling, primary air flow is at maximum when the occupied space is 2°F above the user defined temperature setpoint. Primary air flow is reduced to the minimum air flow setpoint in proportion to space temperature approaching space temperature setpoint.

Under a load for heating, the terminal fan is energized. The terminal fan start point is field adjustable with reference to space temperature offset from space temperature setpoint. A field supplied on/off hot water valve will be energized at .7°F below the user defined temperature setpoint. In order to apply a normally open hot water valve a field supplied reversing relay must be applied to the circuit. The normally closed hot water valve should not exceed 10 va at 24 vac.

Unoccupied mode is in effect when the central air handling station serving primary air to the terminal, shuts down. Upon a signal loss of primary air at the terminals inlet probe, an air flow switch automatically switches the terminal unit into the night setback mode. The night setback temperature setpoint is field adjustable. The terminal unit fan will operate intermittently during night setback to maintain the user defined heating setback temperature.

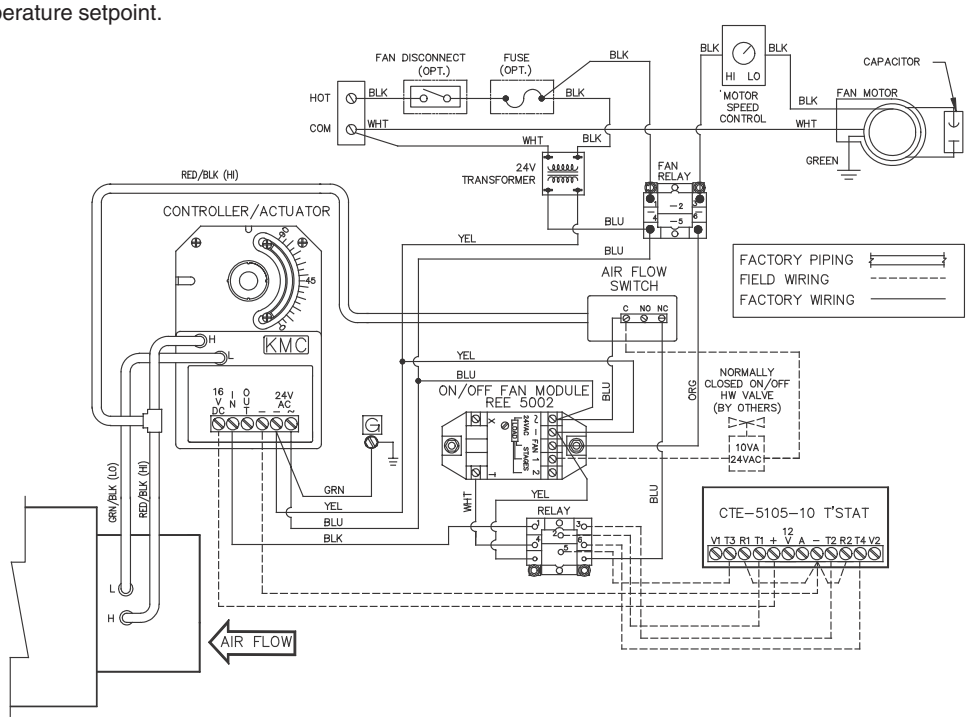

PRODUCT INFORMATION IS SUBJECT TO CHANGE WITHOUT NOTICE. 01/30/2003

JOB NAME	JOB NUMBER	LOCATION		DRAWING NUMBER
BUYER	BUYER #	REVISION	SHEET	45M/N/R-A-2305

CODE CATALOG #	Carrier A United Technologies Company	THIS DOCUMENT IS THE PROPERTY OF CARRIER CORPORATION AND IS DELIVERED UPON THE EXPRESS CONDITION THAT THE CONTENTS WILL NOT BE DISCLOSED OR USED WITHOUT CARRIER CORPORATION'S WRITTEN CONSENT	SUBMISSION OF THESE DRAWINGS OR DOCUMENTS DOES NOT CONSTITUTE PART PERFORMANCE OR ACCEPTANCE OF CONTRACT	ANALOG CONTROL SEQUENCE 2306	45 MA,NA,RA

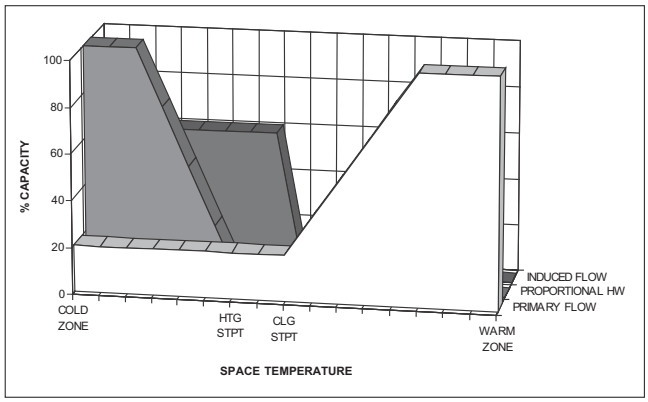

VARIABLE VOLUME FAN POWERED TERMINAL UNIT ANALOG CONTROL SEQUENCE 2306

Cooling With Sequenced Fan and Proportional Hot Water Heat

2306 — User defined primary air flow setpoints are maintained regardless of central system pressure. The terminal fan runs intermittently, during a requirement for heat. Minimum and Maximum primary air flow setpoints are adjusted at the room thermostat as opposed to the terminal controller, with a digital voltmeter (DVM). The thermostat output for minimum and maximum air flow setpoints range from 0-10vdc (0-3300 fpm).

Under load for cooling, primary air flow is at maximum when the occupied space is 2°F above the user defined cooling temperature setpoint. Primary air flow is reduced to the minimum air flow setpoint in proportion to space temperature approaching space temperature setpoint.

Under a load for heating, the terminal fan is energized. The terminal fan start point is field adjustable with reference to space temperature offset from space temperature setpoint. A field supplied normally closed, proportional hot water valve will begin to open at the user defined heating setpoint. The Carrier Model VEP series hot water valves are highly recommended for accurate proportional control. The hot water valve will be fully open at 1° F below the heating setpoint.

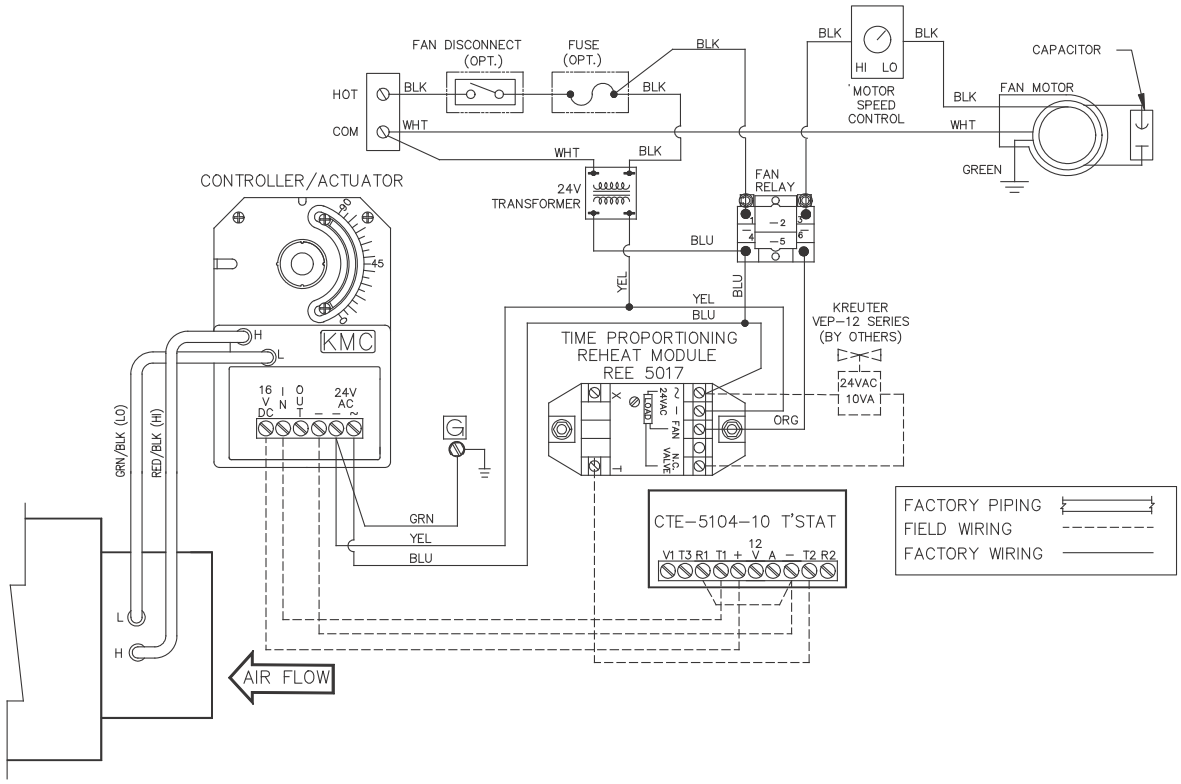

PRODUCT INFORMATION IS SUBJECT TO CHANGE WITHOUT NOTICE. 01/30/2003

JOB NAME	JOB NUMBER	LOCATION		DRAWING NUMBER
BUYER	BUYER #	REVISION	SHEET	45M/N/R-A-2306

CODE CATALOG #	Carrier A United Technologies Company	THIS DOCUMENT IS THE PROPERTY OF CARRIER CORPORATION AND IS DELIVERED UPON THE EXPRESS CONDITION THAT THE CONTENTS WILL NOT BE DISCLOSED OR USED WITHOUT CARRIER CORPORATION'S WRITTEN CONSENT	SUBMISSION OF THESE DRAWINGS OR DOCUMENTS DOES NOT CONSTITUTE PART PERFORMANCE OR ACCEPTANCE OF CONTRACT	ANALOG CONTROL SEQUENCE 2307	45 MA,NA,RA

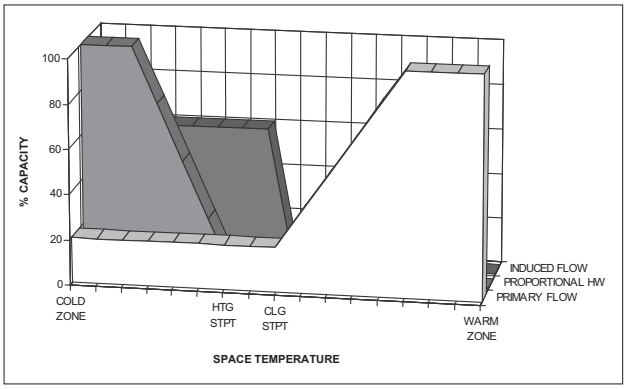

VARIABLE VOLUME FAN POWERED TERMINAL UNIT ANALOG CONTROL SEQUENCE 2307

Cooling With Sequenced Fan, Proportional Hot Water Heat, and Automatic Night Shutdown

2307 — User defined primary air flow setpoints are maintained regardless of central system pressure. The terminal fan runs intermittently, during a requirement for heat. Minimum and Maximum primary air flow setpoints are adjusted at the room thermostat as opposed to the terminal controller, with a digital voltmeter (DVM). The thermostat output for minimum and maximum air flow setpoints range from 0-10vdc (0-3300 fpm).

Under load for cooling, primary air flow is at maximum when the occupied space is 2°F above the user defined cooling temperature setpoint. Primary air flow is reduced to the minimum air flow setpoint in proportion to space temperature approaching space temperature setpoint.

Under a load for heating, the terminal fan is energized. The terminal fan start point is field adjustable with reference to space temperature offset from space temperature setpoint. A field supplied normally closed, proportional hot water valve will begin to open at the user defined heating setpoint. The Carrier Model VEP series hot water valves are highly recommended for accurate proportional control. The hot water valve will be fully open at 1°F below the heating setpoint.

Unoccupied mode is in effect when the central air handling station serving primary air to the terminal, shuts down. Upon a signal loss of primary air at the terminals inlet probe, an air flow switch automatically shuts down the terminal unit fan.

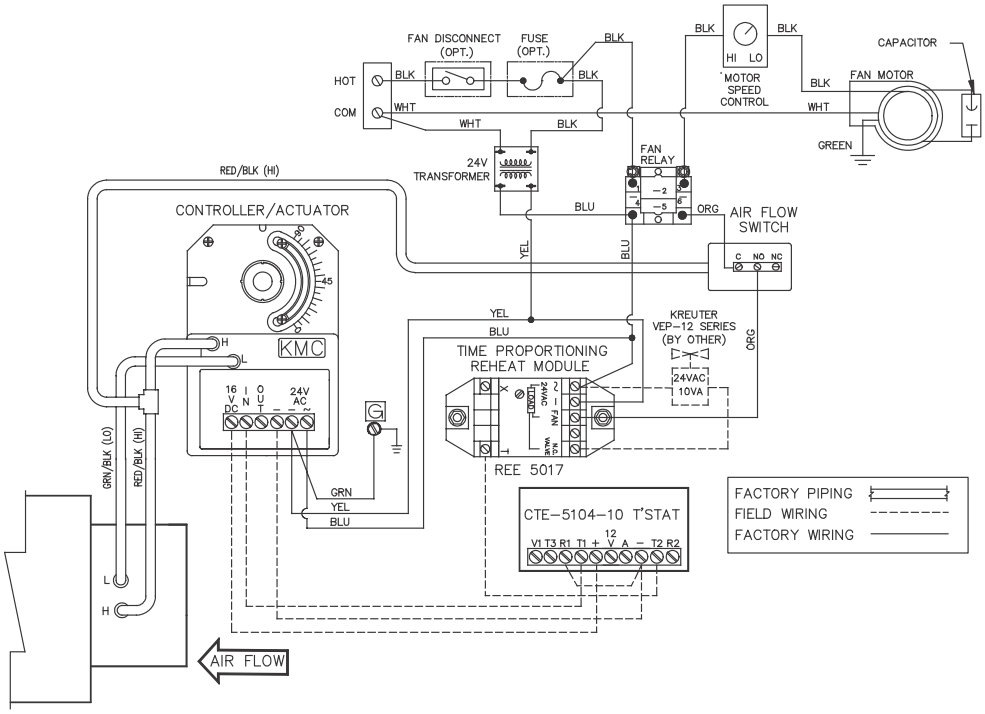

PRODUCT INFORMATION IS SUBJECT TO CHANGE WITHOUT NOTICE. 01/30/2003

JOB NAME	JOB NUMBER	LOCATION		DRAWING NUMBER
BUYER	BUYER #	REVISION	SHEET	45M/N/R-A-2307

CODE	Carrier A United Technologies Company	THIS DOCUMENT IS THE PROPERTY OF CARRIER CORPORATION AND IS DELIVERED UPON THE EXPRESS CONDITION THAT THE CONTENTS WILL NOT BE DISCLOSED OR USED WITHOUT CARRIER CORPORATION'S WRITTEN CONSENT	SUBMISSION OF THESE DRAWINGS OR DOCUMENTS DOES NOT CONSTITUTE PART PERFORMANCE OR ACCEPTANCE OF CONTRACT	ANALOG CONTROL SEQUENCE 2308	45 MA,NA,RA
CATALOG #					

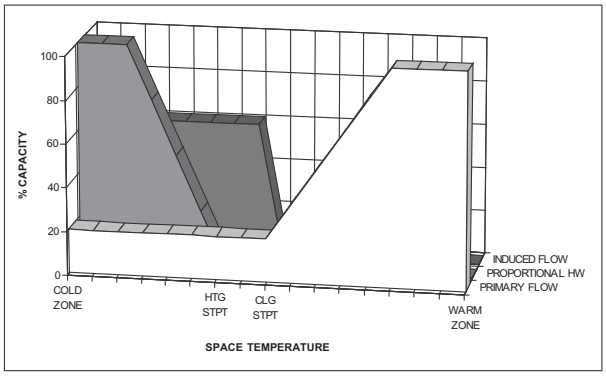

VARIABLE VOLUME FAN POWERED TERMINAL UNIT ANALOG CONTROL SEQUENCE 2308

Cooling With Sequenced Fan, Proportional Hot Water Heat, and Automatic Night Setback

2308 — User defined primary air flow setpoints are maintained regardless of central system pressure. The terminal fan runs intermittently, during a requirement for heat. Minimum and Maximum primary air flow setpoints are adjusted at the room thermostat as opposed to the terminal controller, with a digital voltmeter (DVM). The thermostat output for minimum and maximum air flow setpoints range from 0-10vdc (0-3300 fpm).

Under load for cooling, primary air flow is at maximum when the occupied space is 2°F above the user defined cooling temperature setpoint. Primary air flow is reduced to the minimum air flow setpoint in proportion to space temperature approaching space temperature setpoint.

Under a load for heating, the terminal fan is energized. The terminal fan start point is field adjustable with reference to space temperature offset from space temperature setpoint. A field supplied normally closed, proportional hot water valve will begin to open at the user defined heating setpoint. The Carrier Model VEP series hot water valves are highly recommended for accurate proportional control. The hot water valve will be fully open at 1°F below the heating setpoint.

Unoccupied mode is in effect when the central air handling station serving primary air to the terminal, shuts down. Upon a signal loss of primary air at the terminals inlet probe, an air flow switch automatically switches the terminal unit into the night setback mode. The night setback temperature setpoint is field adjustable. The terminal unit fan will operate intermittently during night setback to maintain the user defined heating setback temperature.

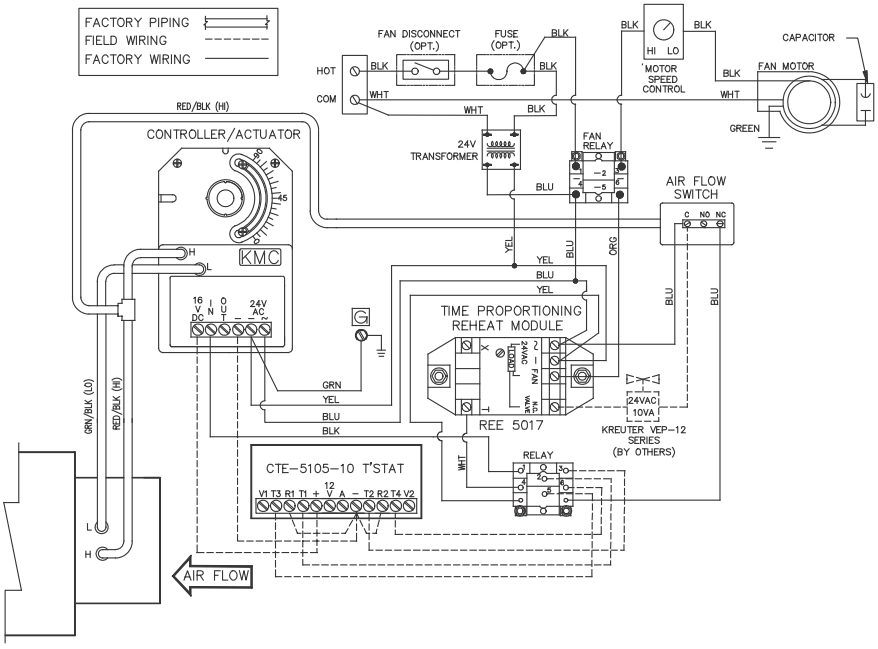

PRODUCT INFORMATION IS SUBJECT TO CHANGE WITHOUT NOTICE. 01/30/2003

JOB NAME	JOB NUMBER	LOCATION		DRAWING NUMBER
BUYER	BUYER #	REVISION	SHEET	45M/N/R-A-2308

CODE CATALOG #	Carrier A United Technologies Company	THIS DOCUMENT IS THE PROPERTY OF CARRIER CORPORATION AND IS DELIVERED UPON THE EXPRESS CONDITION THAT THE CONTENTS WILL NOT BE DISCLOSED OR USED WITHOUT CARRIER CORPORATION'S WRITTEN CONSENT	SUBMISSION OF THESE DRAWINGS OR DOCUMENTS DOES NOT CONSTITUTE PART PERFORMANCE OR ACCEPTANCE OF CONTRACT	ANALOG CONTROL SEQUENCE 2309	45 MA,NA,RA

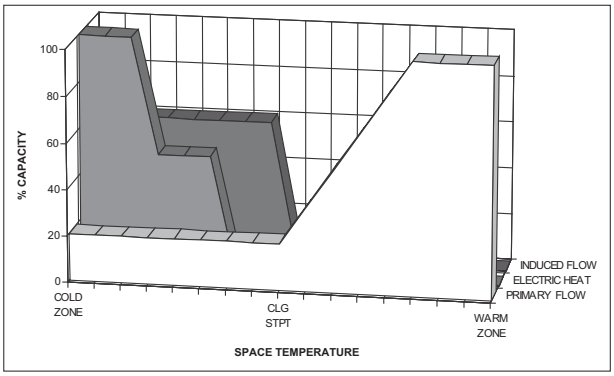

VARIABLE VOLUME FAN POWERED TERMINAL UNIT ANALOG CONTROL SEQUENCE 2309

Cooling With Sequenced Fan and Up To 2-Stages Of Electric Heat

2309 — User defined primary air flow setpoints are maintained regardless of central system pressure. The terminal fan runs intermittently, during a requirement for heat. Minimum and Maximum primary air flow setpoints are adjusted at the room thermostat as opposed to the terminal controller, with a digital voltmeter (DVM). The thermostat output for minimum and maximum air flow setpoints range from 0-10vdc (0-3300 fpm).

Under load for cooling, primary air flow is at maximum when the occupied space is 2°F above the user defined temperature setpoint. Primary air flow is reduced to the minimum air flow setpoint in proportion to space temperature approaching space temperature setpoint.

Under a load for heating, the terminal fan is energized. The terminal fan start point is field adjustable with reference to space temperature offset from space temperature setpoint. Staged on/off electric heat (up to 2-stages), will be sequentially initiated in response to the thermostat signal. The first stage of factory supplied electric heat will be energized at .7°F below the user defined temperature setpoint. Upon a continued drop in space temperature, the second stage of electric heat will energize at 1.4°F below the temperature setpoint.

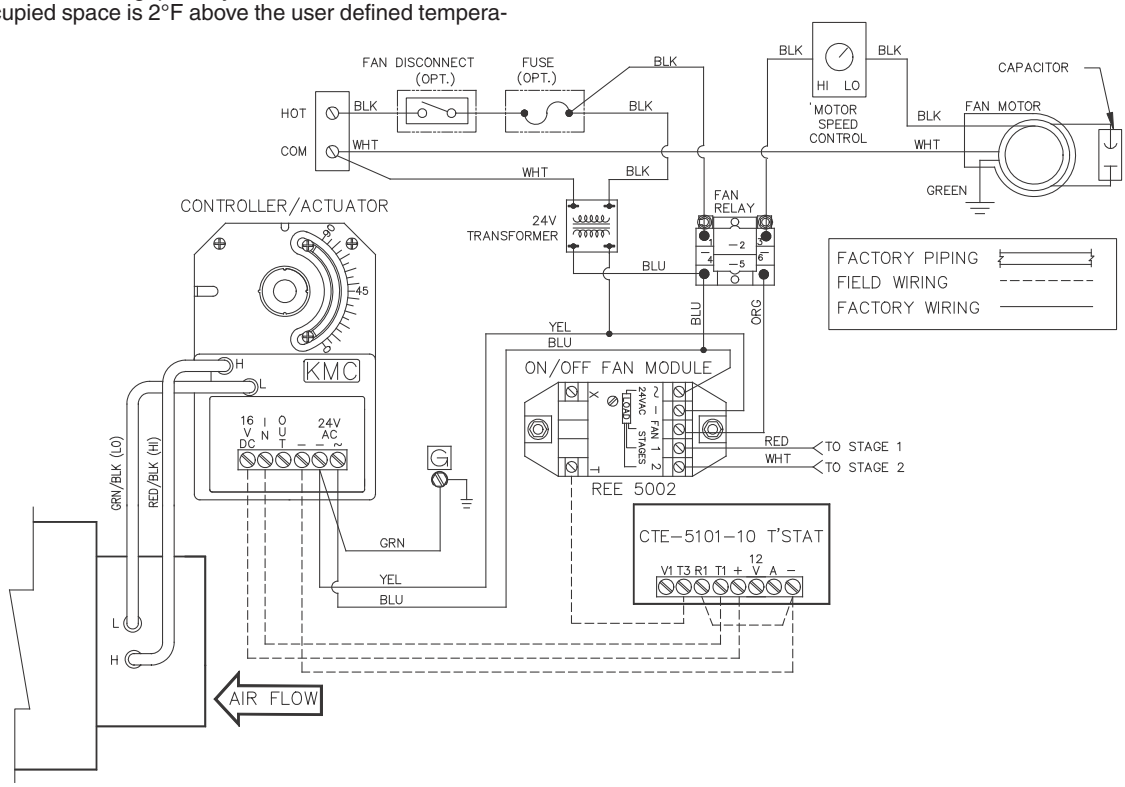

PRODUCT INFORMATION IS SUBJECT TO CHANGE WITHOUT NOTICE. 01/30/2003

JOB NAME	JOB NUMBER	LOCATION		DRAWING NUMBER
BUYER	BUYER #	REVISION	SHEET	45M/N/R-A-2309

CODE	Carrier A United Technologies Company	THIS DOCUMENT IS THE PROPERTY OF CARRIER CORPORATION AND IS DELIVERED UPON THE EXPRESS CONDITION THAT THE CONTENTS WILL NOT BE DISCLOSED OR USED WITHOUT CARRIER CORPORATION'S WRITTEN CONSENT	SUBMISSION OF THESE DRAWINGS OR DOCUMENTS DOES NOT CONSTITUTE PART PERFORMANCE OR ACCEPTANCE OF CONTRACT	ANALOG CONTROL SEQUENCE 2310	45 MA,NA,RA
CATALOG #					

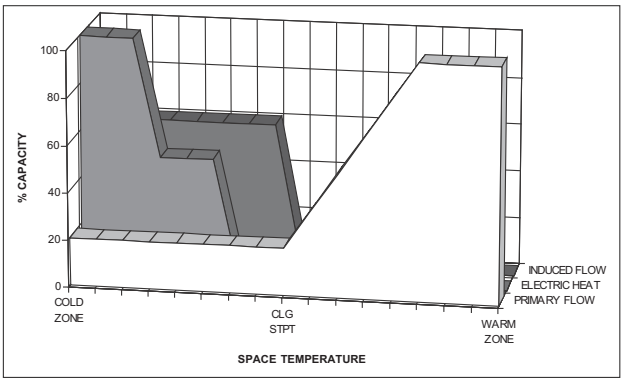

VARIABLE VOLUME FAN POWERED TERMINAL UNIT ANALOG CONTROL SEQUENCE 2310

Cooling With Sequenced Fan, Up to 2-Stages of Electric Heat, and Automatic Night Shutdown

2310 — User defined primary air flow setpoints are maintained regardless of central system pressure. The terminal fan runs intermittently, during a requirement for heat. Minimum and Maximum primary air flow setpoints are adjusted at the room thermostat as opposed to the terminal controller, with a digital voltmeter (DVM). The thermostat output for minimum and maximum air flow setpoints range from 0-10vdc (0-3300 fpm).

Under load for cooling, primary air flow is at maximum when the occupied space is 2°F above the user defined temperature setpoint. Primary air flow is reduced to the minimum air flow setpoint in proportion to space temperature approaching space temperature setpoint.

Under a load for heating, the terminal fan is energized. The terminal fan start point is field adjustable with reference to space temperature offset from space temperature setpoint. Staged on/off electric heat (up to 2-stages), will be sequentially initiated in response to the thermostat signal. The first stage of factory supplied electric heat will be energized at .7°F below the user defined temperature setpoint. Upon a continued drop in space temperature, the second stage of electric heat will energize at 1.4°F below the temperature setpoint.

Unoccupied mode is in effect when the central air handling station serving primary air to the terminal, shuts down. Upon a signal loss of primary air at the terminals inlet probe, an air flow switch automatically shuts down the terminal unit fan.

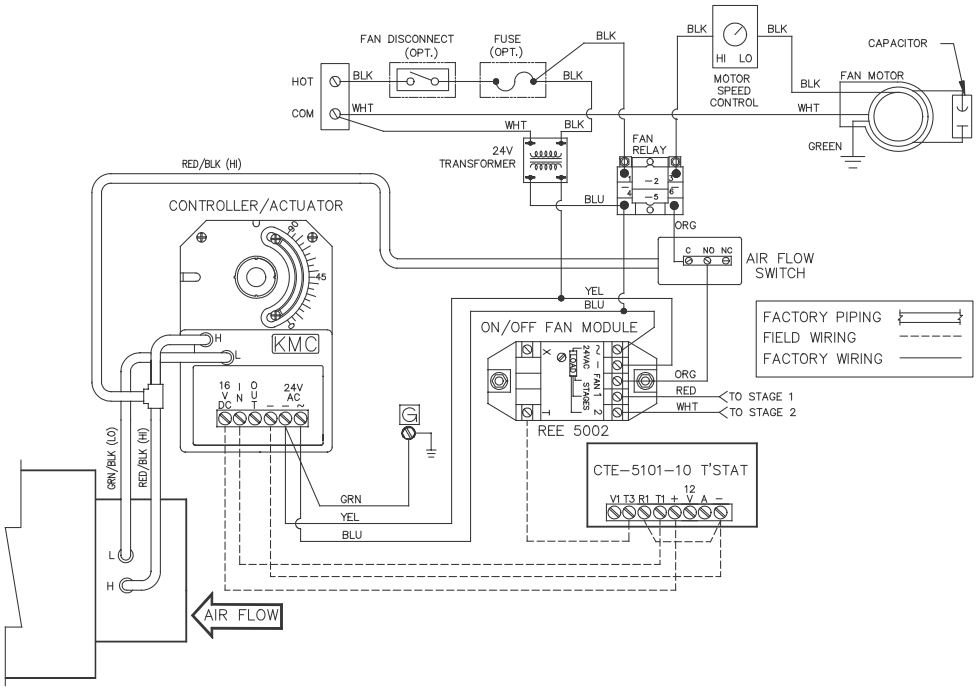

PRODUCT INFORMATION IS SUBJECT TO CHANGE WITHOUT NOTICE. 01/30/2003

JOB NAME	JOB NUMBER	LOCATION		DRAWING NUMBER
BUYER	BUYER #	REVISION	SHEET	45M/N/R-A-2310

CODE / CATALOG #	Carrier — A United Technologies Company	THIS DOCUMENT IS THE PROPERTY OF CARRIER CORPORATION AND IS DELIVERED UPON THE EXPRESS CONDITION THAT THE CONTENTS WILL NOT BE DISCLOSED OR USED WITHOUT CARRIER CORPORATION'S WRITTEN CONSENT	SUBMISSION OF THESE DRAWINGS OR DOCUMENTS DOES NOT CONSTITUTE PART PERFORMANCE OR ACCEPTANCE OF CONTRACT	ANALOG CONTROL SEQUENCE 2311	45 MA,NA,RA

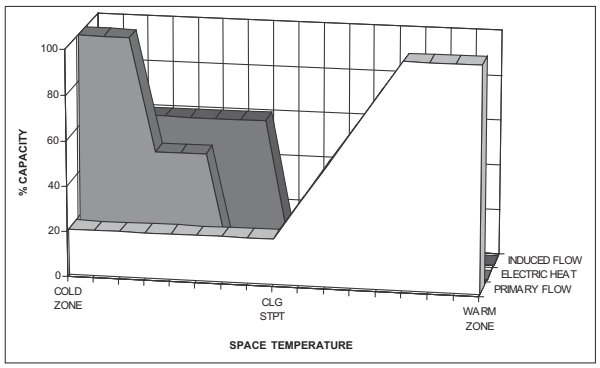

VARIABLE VOLUME FAN POWERED TERMINAL UNIT ANALOG CONTROL SEQUENCE 2311

Cooling With Sequenced Fan, Up to 2-Stages of Electric Heat, and Automatic Night Setback

2311 — User defined primary air flow setpoints are maintained regardless of central system pressure. The terminal fan runs intermittently, during a requirement for heat. Minimum and Maximum primary air flow setpoints are adjusted at the room thermostat as opposed to the terminal controller, with a digital voltmeter (DVM). The thermostat output for minimum and maximum air flow setpoints range from 0-10vdc (0-3300 fpm).

Under load for cooling, primary air flow is at maximum when the occupied space is 2°F above the user defined temperature setpoint. Primary air flow is reduced to the minimum air flow setpoint in proportion to space temperature approaching space temperature setpoint.

Under a load for heating, the terminal fan is energized. The terminal fan start point is field adjustable with reference to space temperature offset from space temperature setpoint. Staged on/off electric heat (up to 2-stages), will be sequentially initiated in response to the thermostat signal. The first stage of factory supplied electric heat will be energized at .7°F below the user defined temperature setpoint. Upon a continued drop in space temperature, the second stage of electric heat will energize at 1.4°F below the temperature setpoint.

Unoccupied mode is in effect when the central air handling station serving primary air to the terminal, shuts down. Upon a signal loss of primary air at the terminals inlet probe, an air flow switch automatically switches the terminal unit into the night setback mode. The night setback temperature setpoint is field adjustable. The terminal unit fan will operate intermittently during night setback to maintain the user defined heating setback temperature.

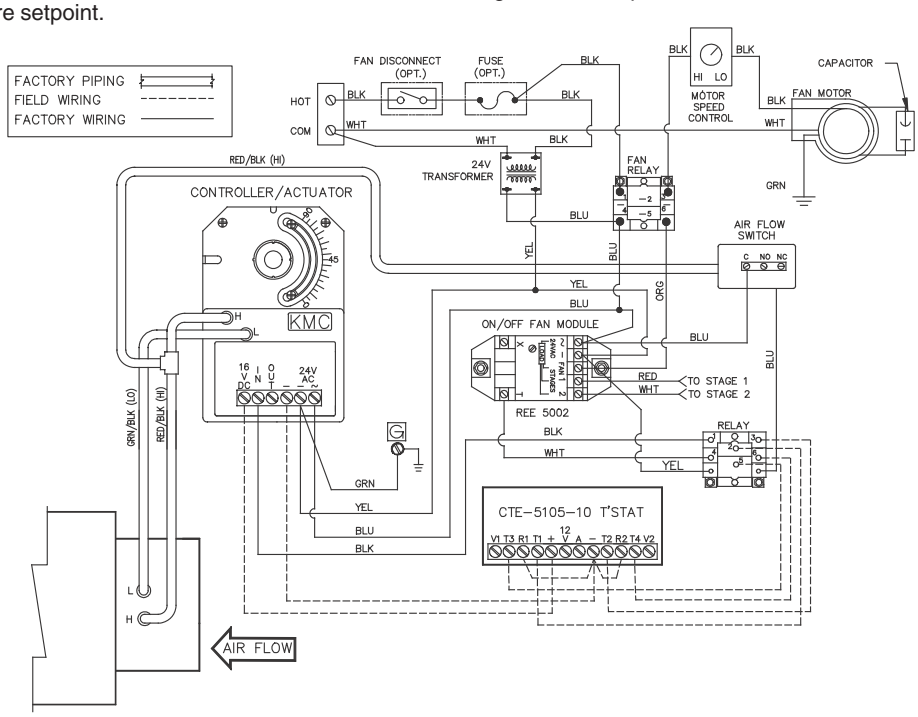

PRODUCT INFORMATION IS SUBJECT TO CHANGE WITHOUT NOTICE. 01/30/2003

JOB NAME	JOB NUMBER	LOCATION		DRAWING NUMBER
BUYER	BUYER #	REVISION	SHEET	45M/N/R-A-2311

CODE CATALOG #	Carrier A United Technologies Company	THIS DOCUMENT IS THE PROPERTY OF CARRIER CORPORATION AND IS DELIVERED UPON THE EXPRESS CONDITION THAT THE CONTENTS WILL NOT BE DISCLOSED OR USED WITHOUT CARRIER CORPORATION'S WRITTEN CONSENT.	SUBMISSION OF THESE DRAWINGS OR DOCUMENTS DOES NOT CONSTITUTE PART PERFORMANCE OR ACCEPTANCE OF CONTRACT.	ANALOG CONTROL SEQUENCE 2313	45 JA,KA,QA

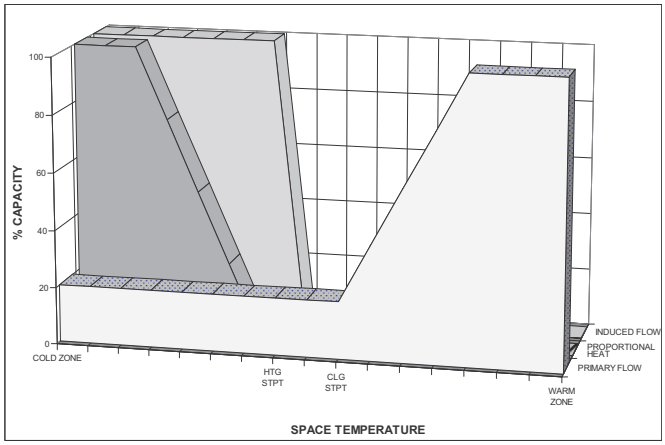

CONSTANT VOLUME FAN POWERED TERMINAL UNIT CONTROL CARRIER CONTROL PACKAGE NO. 2313

Cooling with Sequenced Fan and Proportional Heat Control (Discharge Temperature Sensor Optional)

User defined primary airflow set points are maintained independent of central system pressure. The terminal fan runs intermittently, during a requirement for heat. Minimum and maximum airflow set points are adjusted at the room thermostat with a digital voltmeter (DVM). The thermostat output for minimum and maximum airflow set points ranges from 0 to 10 vdc (0 to 3300 fpm).

Under load for cooling, primary airflow is at maximum when the occupied space is 2°F above the user defined cooling temperature set point. Primary airflow is proportionally reduced to the minimum airflow set point as room temperature approaches set point.

Under a load for heating, the terminal fan is energized. The terminal fan start point is field adjustable with reference to space temperature offset from space temperature set point. The solid-state regulated electric heater will be initiated in response to thermostat signal. Minimum heating will start approximately at 0.4°F below heating set point. As the space temperature continues to decrease, the percent of electric heat output will proportionately increase in 1% increments. At 1°F below heating set point , the heater output will be 38% maximum and will reach 100% at 2°F below heating set point. With the proportional heat discharge temperature sensor option, the heated air is set to a maximum temperature set point to ensure proper mixing of air for the ventilation cfm and to prevent space temperature stratification. When using the discharge temperature sensor, the proportional heat control proportionally modulates temperature between system's temperature before heating and maximum temperature set point.

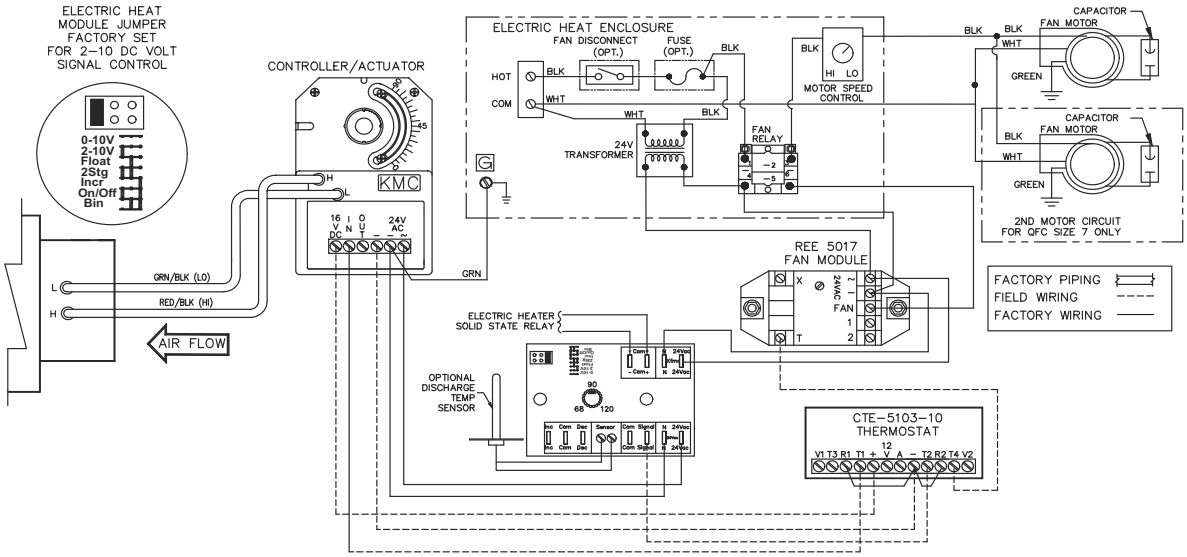

PRODUCT INFORMATION IS SUBJECT TO CHANGE WITHOUT NOTICE. 01/15/2009

JOB NAME	JOB NUMBER	LOCATION	PAGE NUMBER	DRAWING NUMBER
BUYER	BUYER #	SHEET	1 OF 1	45J/K/Q-A-2313

CODE CATALOG #	Carrier A United Technologies Company	THIS DOCUMENT IS THE PROPERTY OF CARRIER CORPORATION AND IS DELIVERED UPON THE EXPRESS CONDITION THAT THE CONTENTS WILL NOT BE DISCLOSED OR USED WITHOUT CARRIER CORPORATION'S WRITTEN CONSENT	SUBMISSION OF THESE DRAWINGS OR DOCUMENTS DOES NOT CONSTITUTE PART PERFORMANCE OR ACCEPTANCE OF CONTRACT	SINGLE FUNCTION, DA-NO PNEUMATIC CONTROL SEQUENCE 1300	45 JP,KP,QP

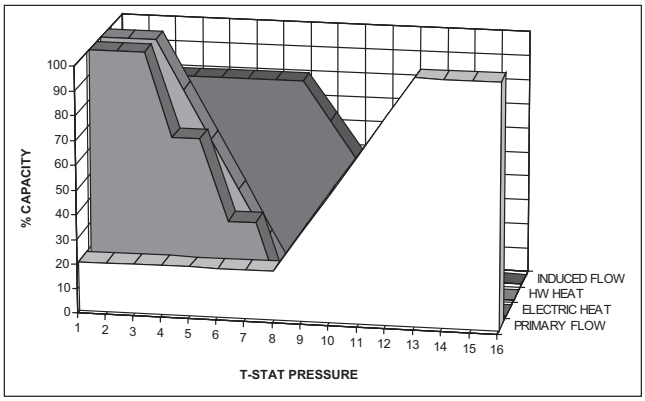

CONSTANT VOLUME FAN POWERED TERMINAL UNIT PNEUMATIC CONTROL SEQUENCE 1300

DANO, Single Function Control of VAV With Optional Reheat, and Constant Volume Fan Operation

1300 — User defined primary air flow setpoints are maintained regardless of central system pressure, while terminal fan runs continuously.

Under load for cooling, primary air flow is at maximum when the thermostat (Direct Acting), is at or above 13 psig. Primary air flow should not exceed fan air flow setpoint. When thermostat branch pressure decreases, primary air flow reduces to the user defined minimum air flow setpoint at 8 psig. As primary air flow is reduced, the constant volume terminal fan proportionally induces ceiling plenum return air or ducted return air, to maintain a constant volume of air to the occupied space.

Under a load for heating, thermostat branch pressure will continue to decrease. Optional, proportional hot water heat (3-8 psig), or sequenced on/off staged electric heat (up to 3-stages), will be initiated in response to the thermostat signal.

Pneumatic air consumption of the single function controller is 14.4 scim at 20 psig (.236 l/m @ 138 kp). Upon a loss of pneumatic air, the terminal damper fails open (Normally Open).

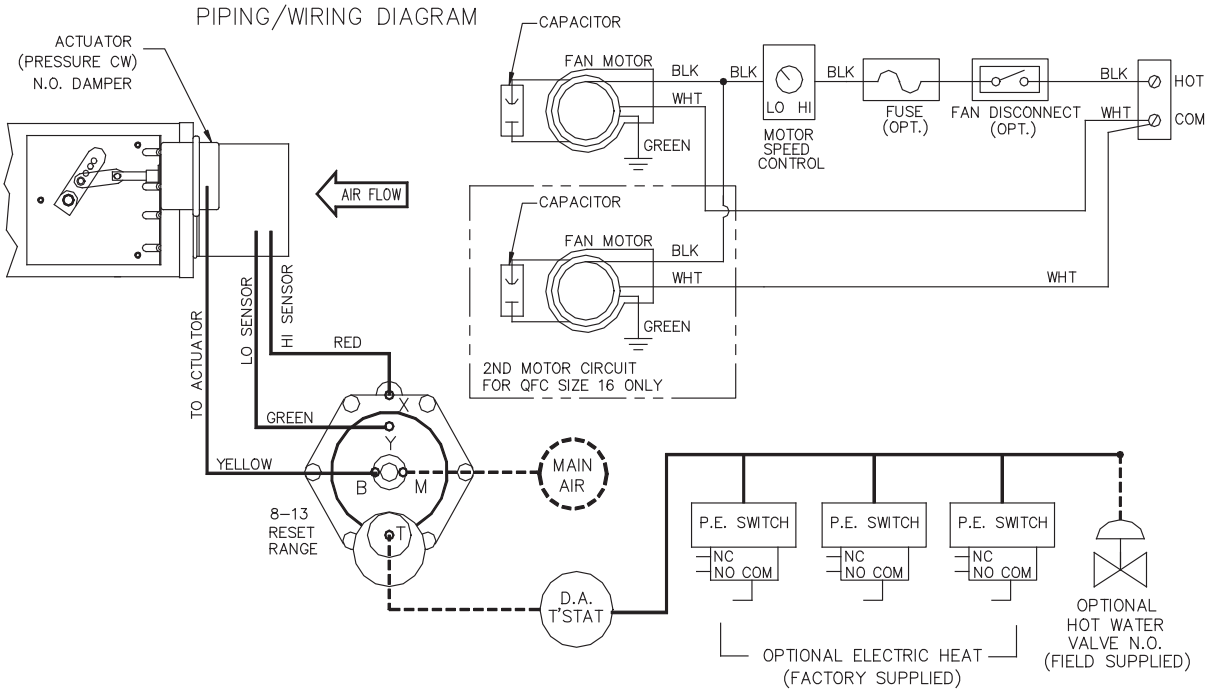

PRODUCT INFORMATION IS SUBJECT TO CHANGE WITHOUT NOTICE. 01/30/2003

JOB NAME	JOB NUMBER	LOCATION		DRAWING NUMBER
BUYER	BUYER #	REVISION	SHEET	45J/K/Q-P-1300

CODE CATALOG #	Carrier A United Technologies Company	THIS DOCUMENT IS THE PROPERTY OF CARRIER CORPORATION AND IS DELIVERED UPON THE EXPRESS CONDITION THAT THE CONTENTS WILL NOT BE DISCLOSED OR USED WITHOUT CARRIER CORPORATION'S WRITTEN CONSENT	SUBMISSION OF THESE DRAWINGS OR DOCUMENTS DOES NOT CONSTITUTE PART PERFORMANCE OR ACCEPTANCE OF CONTRACT	SINGLE FUNCTION, DA-NO PNEUMATIC CONTROL SEQUENCE 1301	45 JP,KP,QP

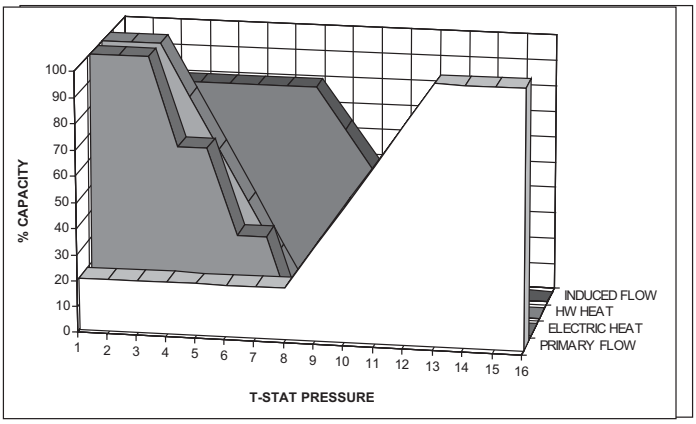

CONSTANT VOLUME FAN POWERED TERMINAL UNIT PNEUMATIC CONTROL SEQUENCE 1301

DANO, Single Function Control of VAV With Optional Reheat, Constant Volume Fan Operation and Night Shutdown

1301 — User defined primary air flow setpoints are maintained regardless of central system pressure, while terminal fan runs continuously.

Under load for cooling, primary air flow is at maximum when the thermostat (Direct Acting), is at or above 13 psig. Primary air flow should not exceed fan air flow setpoint. When thermostat branch pressure decreases, primary air flow reduces to the user defined minimum air flow setpoint at 8 psig. As primary air flow is reduced, the constant volume terminal fan proportionally induces ceiling plenum return air or ducted return air, to maintain a constant volume of air to the occupied space.

Under a load for heating, thermostat branch pressure will continue to decrease. Optional, proportional hot water heat (3-8 psig),or sequenced on/off staged electric heat (up to 3-stages), will be initiated in response to the thermostat signal.

Unoccupied mode is in effect when the central air handling station serving primary air to the terminal, shuts down. Upon a signal loss of primary air at the terminals inlet probe, an air flow switch automatically shuts down the constant volume terminal fan. The terminal's constant volume fan will start automatically when primary air flow is sensed at the inlet. Pneumatic air consumption of the single function controller is 14.4 scim at 20 psig (.236 l/m @ 138 kp). Upon a loss of pneumatic air, the terminal damper fails open (Normally Open).

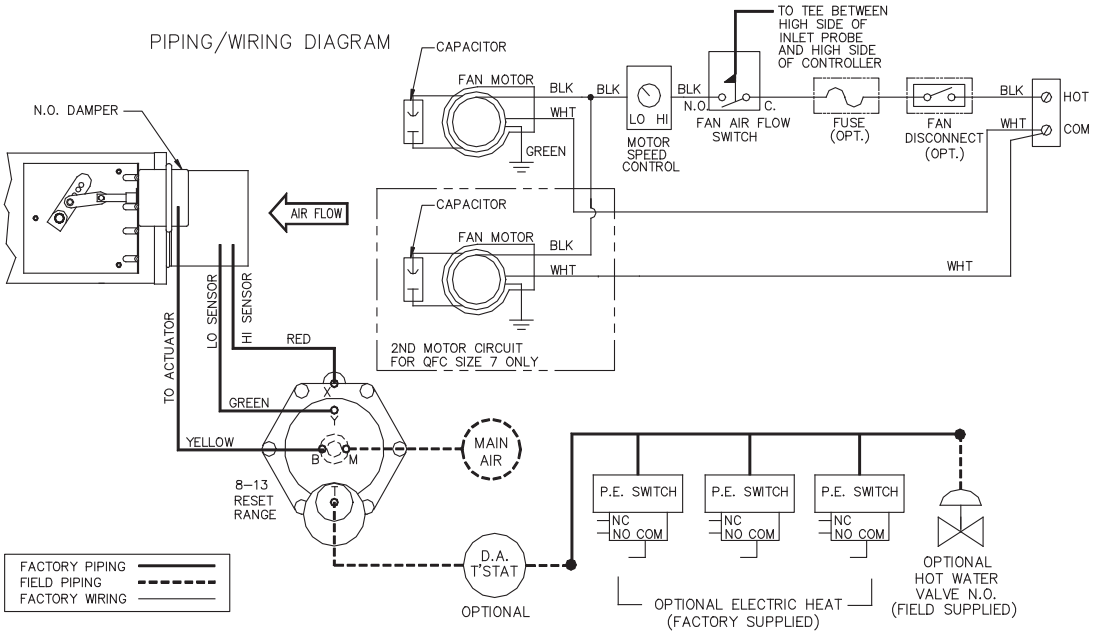

PRODUCT INFORMATION IS SUBJECT TO CHANGE WITHOUT NOTICE. 01/30/2003

JOB NAME	JOB NUMBER	LOCATION		DRAWING NUMBER
BUYER	BUYER #	REVISION	SHEET	45J/K/Q-P-1301

CODE	Carrier A United Technologies Company	THIS DOCUMENT IS THE PROPERTY OF CARRIER CORPORATION AND IS DELIVERED UPON THE EXPRESS CONDITION THAT THE CONTENTS WILL NOT BE DISCLOSED OR USED WITHOUT CARRIER CORPORATION'S WRITTEN CONSENT	SUBMISSION OF THESE DRAWINGS OR DOCUMENTS DOES NOT CONSTITUTE PART PERFORMANCE OR ACCEPTANCE OF CONTRACT	SINGLE FUNCTION, DA-NO PNEUMATIC CONTROL SEQUENCE 1302	45 JP,KP,QP
CATALOG #					

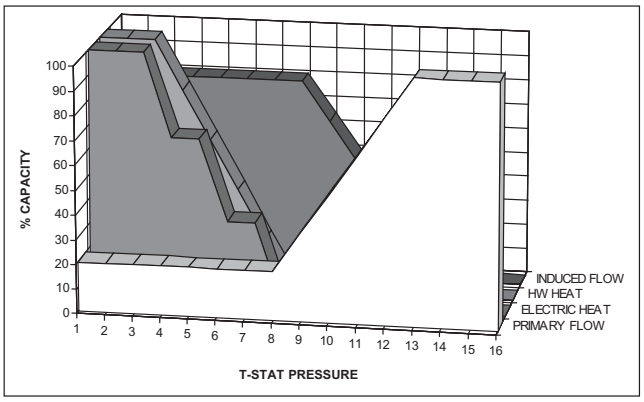

CONSTANT VOLUME FAN POWERED TERMINAL UNIT PNEUMATIC CONTROL SEQUENCE 1302

DANO, Single Function Control of VAV, Optional Reheat, Constant Volume Fan, Night Shutdown and Unoccupied Heating

1302 — User defined primary air flow setpoints are maintained regardless of central system pressure, while terminal fan runs continuously.

Under load for cooling, primary air flow is at maximum when the thermostat (Direct Acting), is at or above 13 psig. Primary air flow should not exceed fan air flow setpoint. When thermostat branch pressure decreases, primary air flow reduces to the user defined minimum air flow setpoint at 8 psig. As primary air flow is reduced, the constant volume terminal fan proportionally induces ceiling plenum return air or ducted return air, to maintain a constant volume of air to the occupied space.

Under a load for heating, thermostat branch pressure will continue to decrease. Optional, proportional hot water heat (3-8 psig),or sequenced on/off staged electric heat (up to 3-stages), will be initiated in response to the thermostat signal.

Unoccupied mode is in effect when the central air handling station serving primary air to the terminal, shuts down. Upon a signal loss of primary air at the terminals inlet probe, an air flow switch automatically shuts down the constant volume terminal fan. A PE switch is included in the control circuit to provide unoccupied heating. The PE switch is set to energize the constant volume terminal fan at 8 psig thermostat signal. If the terminal is equipped with optional reheat, then the reheat will be energized sequentially until the temperature in the unoccupied space has been satisfied. Otherwise, the terminal's constant volume fan will start automatically when primary air flow is sensed at the inlet. Pneumatic air consumption of the single function controller is 14.4 scim at 20 psig (.236 l/m @ 138 kp). Upon a loss of pneumatic air, the terminal damper fails open (Normally Open).

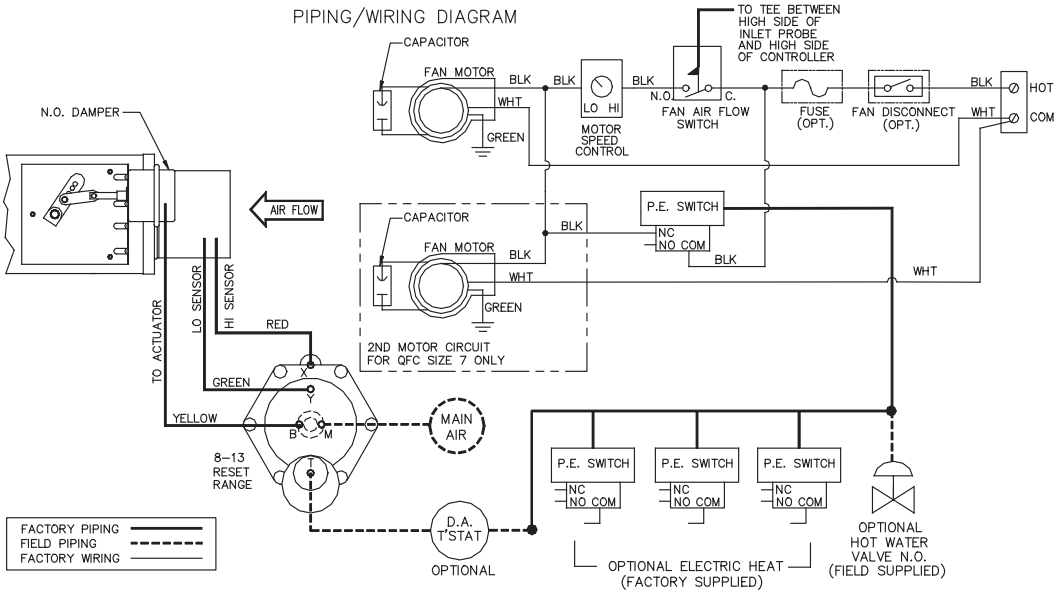

PRODUCT INFORMATION IS SUBJECT TO CHANGE WITHOUT NOTICE. 01/30/2003

JOB NAME	JOB NUMBER	LOCATION		DRAWING NUMBER
BUYER	BUYER #	REVISION	SHEET	45J/K/Q-P-1302

CODE CATALOG #	Carrier A United Technologies Company	THIS DOCUMENT IS THE PROPERTY OF CARRIER CORPORATION AND IS DELIVERED UPON THE EXPRESS CONDITION THAT THE CONTENTS WILL NOT BE DISCLOSED OR USED WITHOUT CARRIER CORPORATION'S WRITTEN CONSENT	SUBMISSION OF THESE DRAWINGS OR DOCUMENTS DOES NOT CONSTITUTE PART PERFORMANCE OR ACCEPTANCE OF CONTRACT	SINGLE FUNCTION, RA-NC PNEUMATIC CONTROL SEQUENCE 1303	45 JP,KP,QP

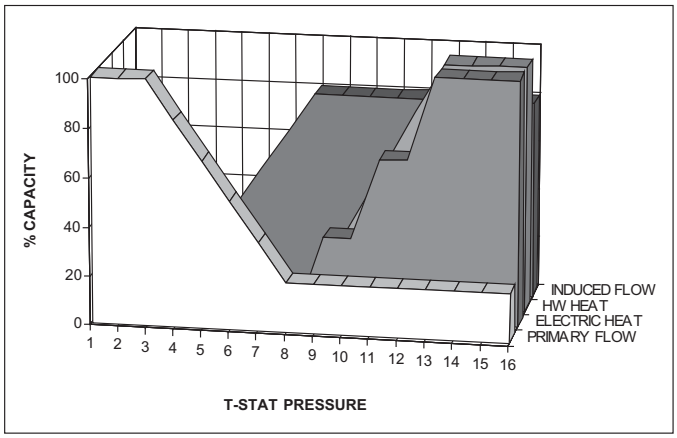

CONSTANT VOLUME FAN POWERED TERMINAL UNIT PNEUMATIC CONTROL SEQUENCE 1303

RANC, Single Function Control of VAV With Optional Reheat, and Constant Volume Fan Operation

1303 — User defined primary air flow setpoints are maintained regardless of central system pressure, while terminal fan runs continuously.

Under load for cooling, primary air flow is at maximum when the thermostat (Reverse Acting), is at or below 3 psig. Primary air flow should not exceed fan air flow setpoint. When thermostat branch pressure increases, primary air flow reduces to the user defined minimum air flow setpoint at 8 psig. As primary air flow is reduced, the constant volume terminal fan proportionally induces ceiling plenum return air or ducted return air, to maintain a constant volume of air to the occupied space.

Under a load for heating, thermostat branch pressure will continue to increase. Optional, proportional hot water heat (8-13 psig),or sequenced on/off staged electric heat (up to 3-stages), will be initiated in response to the thermostat signal. Pneumatic air consumption of the single function controller is 14.4 scim at 20 psig (.236 l/m @ 138 kp). Upon a loss of pneumatic air, the terminal damper fails closed (Normally Closed).

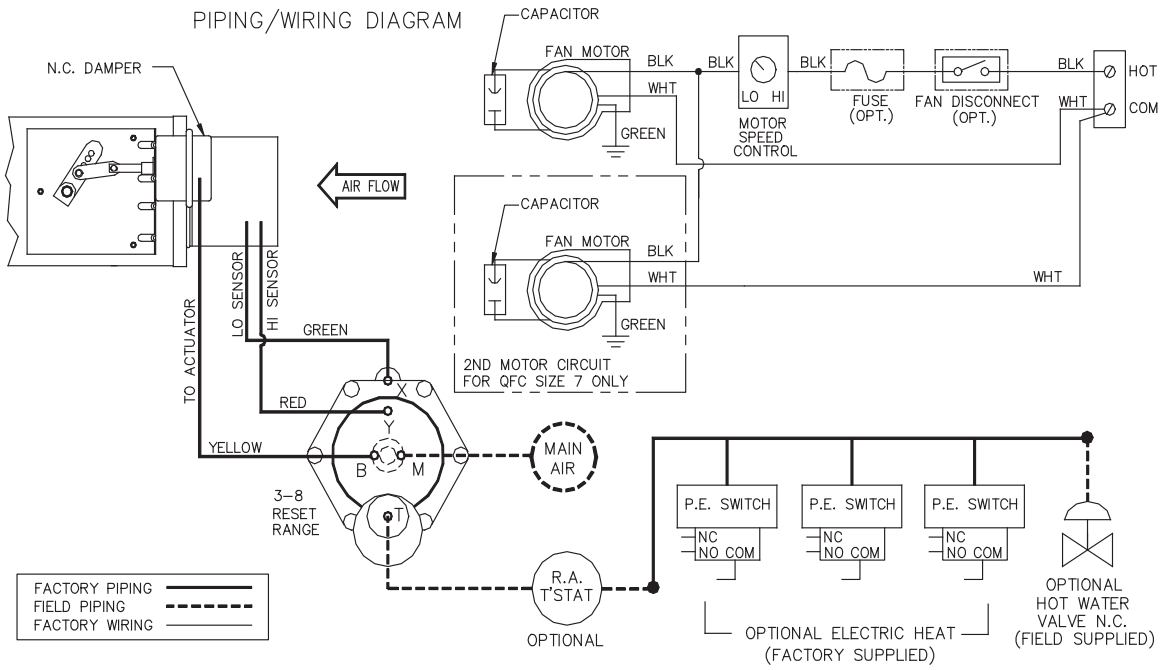

PRODUCT INFORMATION IS SUBJECT TO CHANGE WITHOUT NOTICE. 01/30/2003

JOB NAME	JOB NUMBER	LOCATION		DRAWING NUMBER
BUYER	BUYER #	REVISION	SHEET	45J/K/Q-P-1303

CODE	Carrier A United Technologies Company	THIS DOCUMENT IS THE PROPERTY OF CARRIER CORPORATION AND IS DELIVERED UPON THE EXPRESS CONDITION THAT THE CONTENTS WILL NOT BE DISCLOSED OR USED WITHOUT CARRIER CORPORATION'S WRITTEN CONSENT	SUBMISSION OF THESE DRAWINGS OR DOCUMENTS DOES NOT CONSTITUTE PART PERFORMANCE OR ACCEPTANCE OF CONTRACT	SINGLE FUNCTION, RA-NC PNEUMATIC CONTROL SEQUENCE 1304	45 JP,KP,QP
CATALOG #					

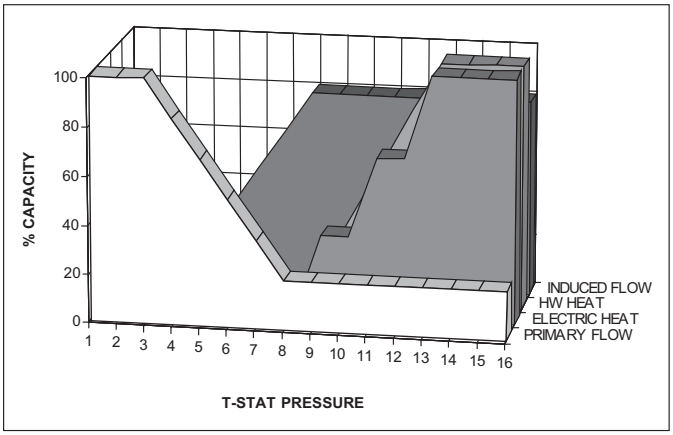

CONSTANT VOLUME FAN POWERED TERMINAL UNIT PNEUMATIC CONTROL SEQUENCE 1304

RANC, Single Function Control of VAV With Optional Reheat, Constant Volume Fan Operation and Night Shutdown

1304 — User defined primary air flow setpoints are maintained regardless of central system pressure, while terminal fan runs continuously.

Under load for cooling, primary air flow is at maximum when the thermostat (Reverse Acting), is at or above 3 psig. Primary air flow should not exceed fan air flow setpoint. When thermostat branch pressure increases, primary air flow reduces to the user defined minimum air flow setpoint at 8 psig. As primary air flow is reduced, the constant volume terminal fan proportionally induces ceiling plenum return air or ducted return air, to maintain a constant volume of air to the occupied space.

Under a load for heating, thermostat branch pressure will continue to increase. Optional, proportional hot water heat (8-13 psig),or sequenced on/off staged electric heat (up to 3-stages), will be initiated in response to the thermostat signal.

Unoccupied mode is in effect when the central air handling station serving primary air to the terminal, shuts down. Upon a signal loss of primary air at the terminals inlet probe, an air flow switch automatically shuts down the constant volume terminal fan. The terminal's constant volume fan will start automatically when primary air flow is sensed at the inlet. Pneumatic air consumption of the single function controller is 14.4 scim at 20 psig (.236 l/m @ 138 kp). Upon a loss of pneumatic air, the terminal damper fails closed (Normally Closed).

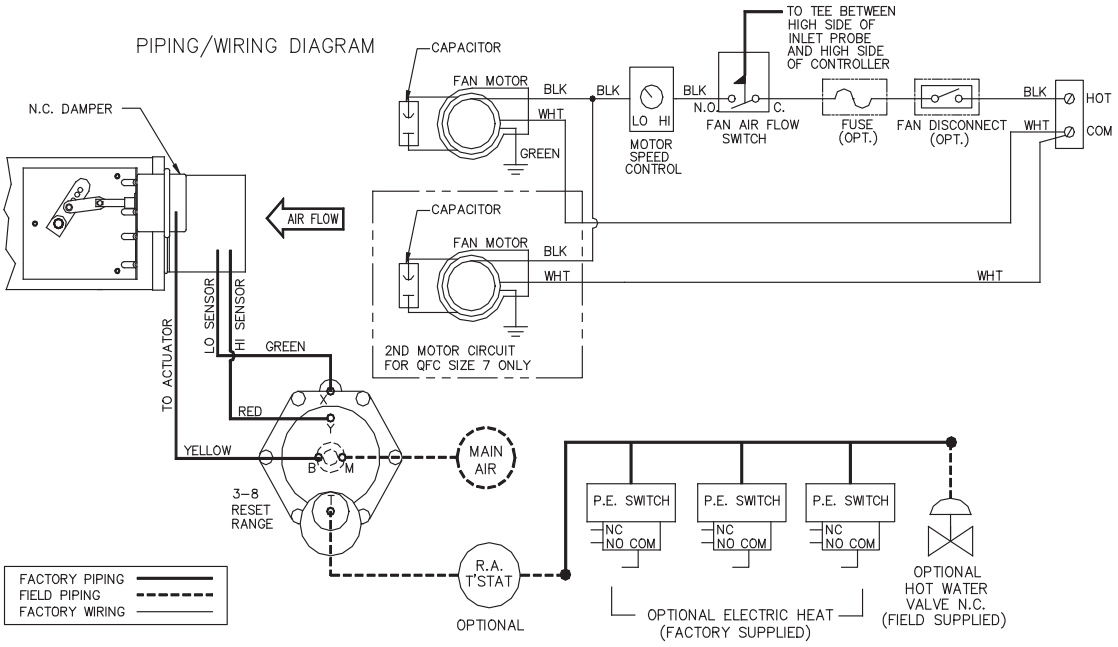

PRODUCT INFORMATION IS SUBJECT TO CHANGE WITHOUT NOTICE. 01/30/2003

JOB NAME	JOB NUMBER	LOCATION		DRAWING NUMBER
BUYER	BUYER #	REVISION	SHEET	45J/K/Q-P-1304

CODE CATALOG #	Carrier A United Technologies Company	THIS DOCUMENT IS THE PROPERTY OF CARRIER CORPORATION AND IS DELIVERED UPON THE EXPRESS CONDITION THAT THE CONTENTS WILL NOT BE DISCLOSED OR USED WITHOUT CARRIER CORPORATION'S WRITTEN CONSENT	SUBMISSION OF THESE DRAWINGS OR DOCUMENTS DOES NOT CONSTITUTE PART PERFORMANCE OR ACCEPTANCE OF CONTRACT	SINGLE FUNCTION, RA-NC PNEUMATIC CONTROL SEQUENCE 1305	45 JP,KP,QP

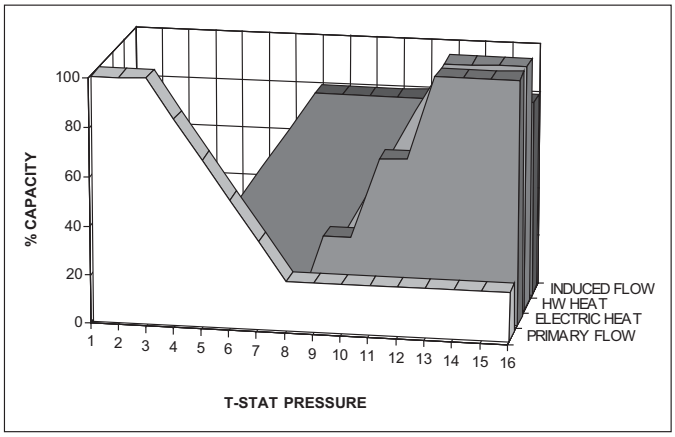

CONSTANT VOLUME FAN POWERED TERMINAL UNIT PNEUMATIC CONTROL SEQUENCE 1305

RANC, Single Function Control of VAV, Optional Reheat, Constant Volume Fan Operation, Night Shutdown and Unoccupied Heating

1305 — User defined primary air flow setpoints are maintained regardless of central system pressure, while terminal fan runs continuously.

Under load for cooling, primary air flow is at maximum when the thermostat (Reverse Acting), is at or above 3 psig. Primary air flow should not exceed fan air flow setpoint. When thermostat branch pressure increases, primary air flow reduces to the user defined minimum air flow setpoint at 8 psig. As primary air flow is reduced, the constant volume terminal fan proportionally induces ceiling plenum return air or ducted return air, to maintain a constant volume of air to the occupied space.

Under a load for heating, thermostat branch pressure will continue to increase. Optional, proportional hot water heat (8-13 psig),or sequenced on/off staged electric heat (up to 3-stages), will be initiated in response to the thermostat signal.

Unoccupied mode is in effect when the central air handling station serving primary air to the terminal, shuts down. Upon a signal loss of primary air at the terminals inlet probe, an air flow switch automatically shuts down the constant volume terminal fan. A PE switch is included in the control circuit to provide unoccupied heating. The PE switch is set to energize the constant volume terminal fan at 8 psig thermostat signal. If the terminal is equipped with optional reheat, then the reheat will be energized sequentially until the temperature in the unoccupied space has been satisfied. Otherwise, the terminal's constant volume fan will start automatically when primary air flow is sensed at the inlet. Pneumatic air consumption of the single function controller is 14.4 scim at 20 psig (.236 l/m @ 138 kp). Upon a loss of pneumatic air, the terminal damper fails closed (Normally Closed).

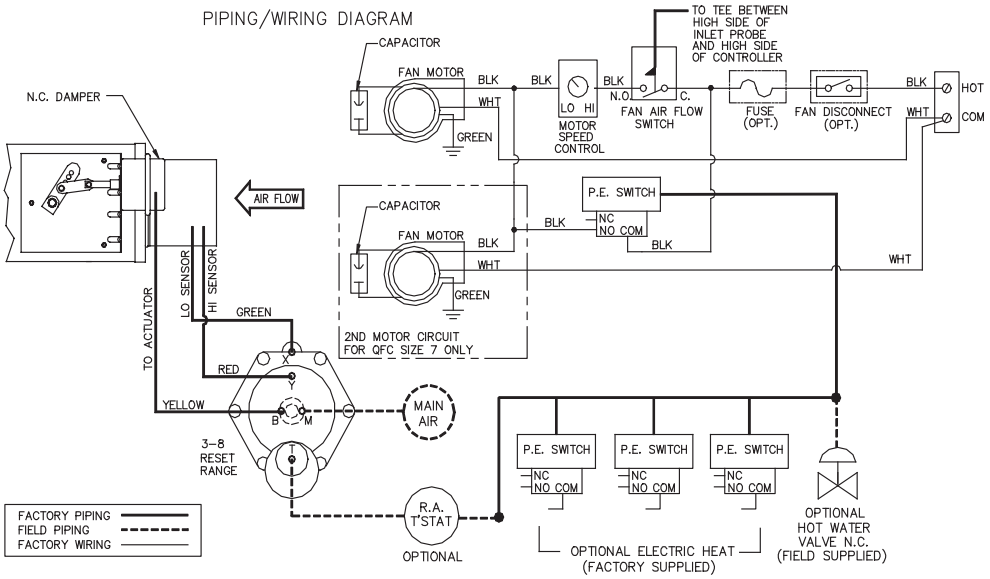

PRODUCT INFORMATION IS SUBJECT TO CHANGE WITHOUT NOTICE. 01/30/2003

JOB NAME	JOB NUMBER	LOCATION		DRAWING NUMBER
BUYER	BUYER #	REVISION	SHEET	45J/K/Q-P-1305

CODE CATALOG #	Carrier A United Technologies Company	THIS DOCUMENT IS THE PROPERTY OF CARRIER CORPORATION AND IS DELIVERED UPON THE EXPRESS CONDITION THAT THE CONTENTS WILL NOT BE DISCLOSED OR USED WITHOUT CARRIER CORPORATION'S WRITTEN CONSENT	SUBMISSION OF THESE DRAWINGS OR DOCUMENTS DOES NOT CONSTITUTE PART PERFORMANCE OR ACCEPTANCE OF CONTRACT	MULTI FUNCTION, DA-N0 PNEUMATIC CONTROL SEQUENCE 1306	45 JP,KP,QP

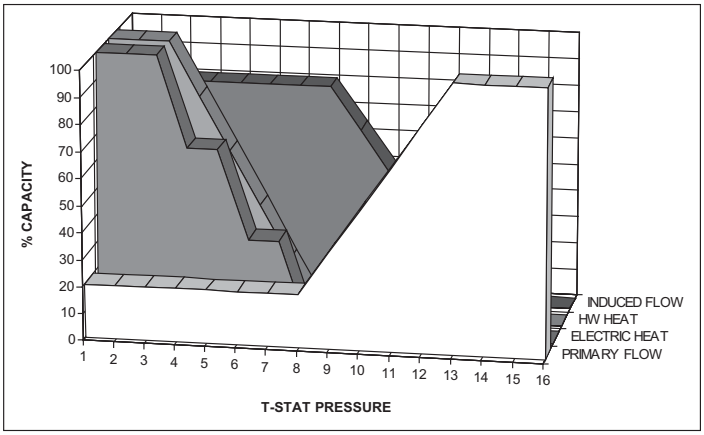

CONSTANT VOLUME FAN POWERED TERMINAL UNIT PNEUMATIC CONTROL SEQUENCE 1306

DANO, Multi-Function Control of VAV With Optional Reheat, and Constant Volume Fan Operation

1306 — User defined primary air flow setpoints are maintained regardless of central system pressure, while terminal fan runs continuously. Primary air flow is controlled by a multi-function reset volume controller. If necessary, the user can opt to field adjust reset start, reset span, select N.O. or N.C. damper by turning a dial, and choice of using Direct or Reverse acting thermostats. The controller is factory set to provide the following sequence of operation:

Under load for cooling, primary air flow is at maximum when the thermostat (Direct Acting), is at or above 13 psig. Primary air flow should not exceed fan air flow setpoint. When thermostat branch pressure decreases, primary air flow reduces to the user defined minimum air flow setpoint at 8 psig. As primary air flow is reduced, the constant volume terminal fan proportionally induces ceiling plenum return air or ducted return air, to maintain a constant volume of air to the occupied space.

Under a load for heating, thermostat branch pressure will continue to decrease. Optional, proportional hot water heat (3-8 psig), or sequenced on/off staged electric heat (up to 3-stages), will be initiated in response to the thermostat signal.

Pneumatic air consumption of the multi-function controller is 28.8 scim at 20 psig (.472 l/m @ 138 kPa). Upon a loss of pneumatic air, the damper fails open (Normally Open).

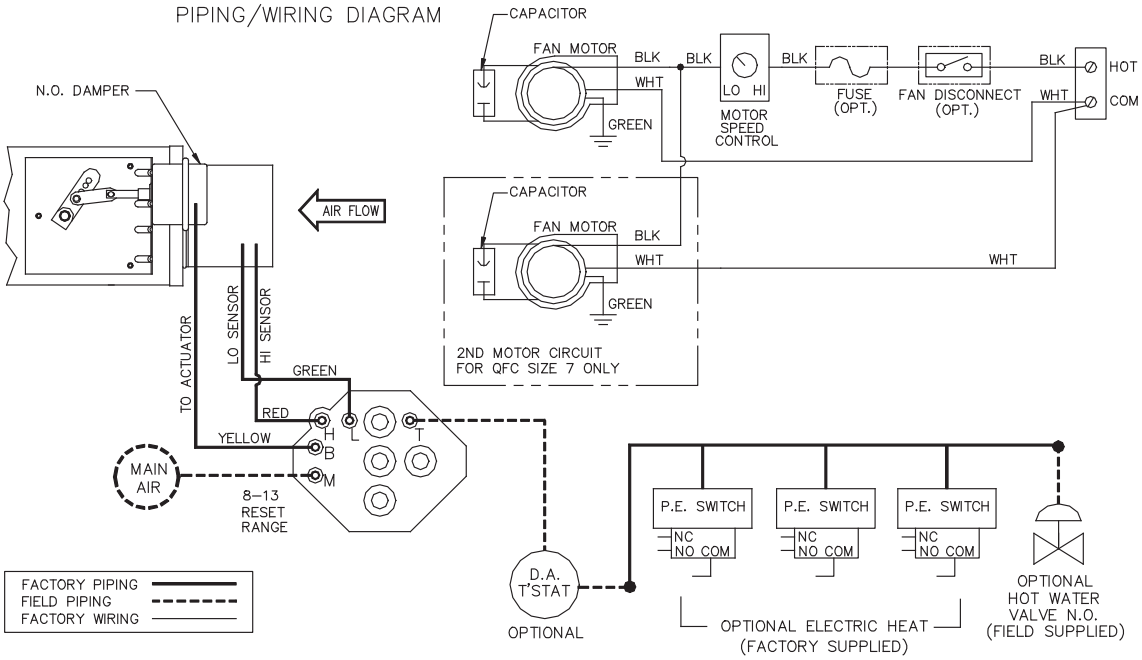

PRODUCT INFORMATION IS SUBJECT TO CHANGE WITHOUT NOTICE. 01/30/2003

JOB NAME	JOB NUMBER	LOCATION		DRAWING NUMBER
BUYER	BUYER #	REVISION	SHEET	45J/K/Q-P-1306

CODE CATALOG #	Carrier A United Technologies Company	THIS DOCUMENT IS THE PROPERTY OF CARRIER CORPORATION AND IS DELIVERED UPON THE EXPRESS CONDITION THAT THE CONTENTS WILL NOT BE DISCLOSED OR USED WITHOUT CARRIER CORPORATION'S WRITTEN CONSENT	SUBMISSION OF THESE DRAWINGS OR DOCUMENTS DOES NOT CONSTITUTE PART PERFORMANCE OR ACCEPTANCE OF CONTRACT	MULTI FUNCTION, DA-N0 PNEUMATIC CONTROL SEQUENCE 1307	45 JP,KP,QP

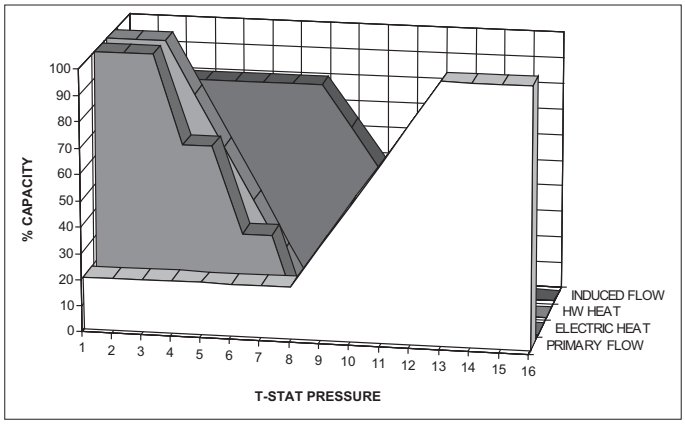

CONSTANT VOLUME FAN POWERED TERMINAL UNIT PNEUMATIC CONTROL SEQUENCE 1307

DANO, Multi-Function Control of VAV With Optional Reheat, Constant Volume Fan Operation and Night Shutdown

1307 — User defined primary air flow setpoints are maintained regardless of central system pressure, while terminal fan runs continuously. Primary air flow is controlled by a multi-function reset volume controller. If necessary, the user can opt to field adjust reset start, reset span, select N.O. or N.C. damper by turning a dial, and choice of using Direct or Reverse acting thermostats. The controller is factory set to provide the following sequence of operation:

Under load for cooling, primary air flow is at maximum when the thermostat (Direct Acting), is at or above 13 psig. Primary air flow should not exceed fan air flow setpoint. When thermostat branch pressure decreases, primary air flow reduces to the user defined minimum air flow setpoint at 8 psig. As primary air flow is reduced, the constant volume terminal fan proportionally induces ceiling plenum return air or ducted return air, to maintain a constant volume of air to the occupied space.

Under a load for heating, thermostat branch pressure will continue to decrease. Optional, proportional hot water heat (3-8 psig),or sequenced on/off staged electric heat (up to 3-stages), will be initiated in response to the thermostat signal.

Unoccupied mode is in effect when the central air handling station serving primary air to the terminal, shuts down. Upon a signal loss of primary air at the terminals inlet probe, an air flow switch automatically shuts down the constant volume terminal fan. The terminal's constant volume fan will start automatically when primary air flow is sensed at the inlet. Pneumatic air consumption of the multi-function controller is 28.8 scim at 20 psig (.472 l/m @ 138 kPa). Upon a loss of pneumatic air, the terminal damper fails open (Normally Open).

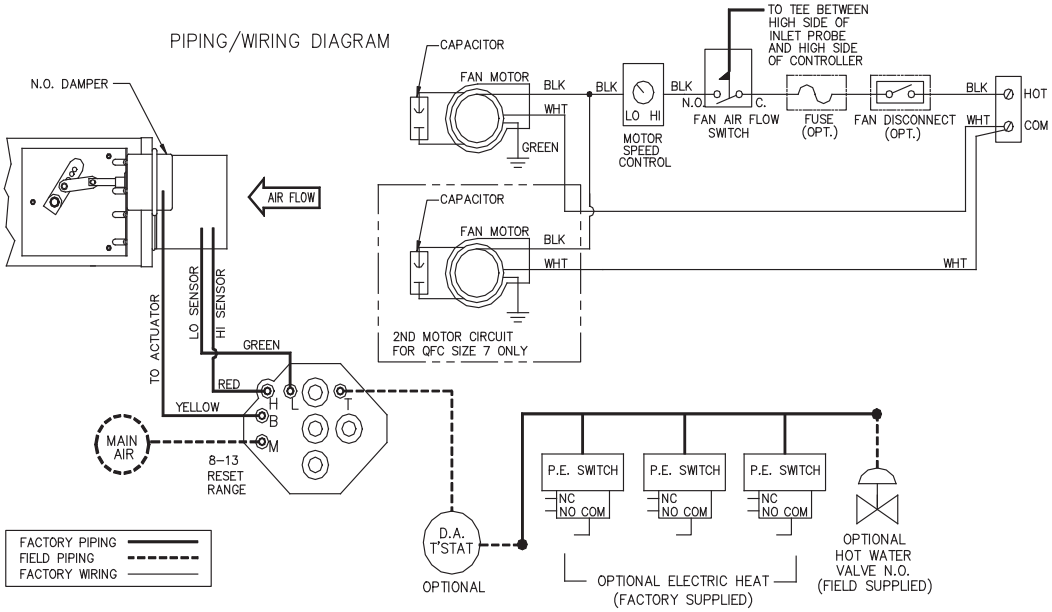

PRODUCT INFORMATION IS SUBJECT TO CHANGE WITHOUT NOTICE. 01/30/2003

JOB NAME	JOB NUMBER	LOCATION		DRAWING NUMBER
BUYER	BUYER #	REVISION	SHEET	45J/K/Q-P-1307

CODE	Carrier A United Technologies Company	THIS DOCUMENT IS THE PROPERTY OF CARRIER CORPORATION AND IS DELIVERED UPON THE EXPRESS CONDITION THAT THE CONTENTS WILL NOT BE DISCLOSED OR USED WITHOUT CARRIER CORPORATION'S WRITTEN CONSENT	SUBMISSION OF THESE DRAWINGS OR DOCUMENTS DOES NOT CONSTITUTE PART PERFORMANCE OR ACCEPTANCE OF CONTRACT	MULTI FUNCTION, DA-N0 PNEUMATIC CONTROL SEQUENCE 1308	45 JP,KP,QP
CATALOG #					

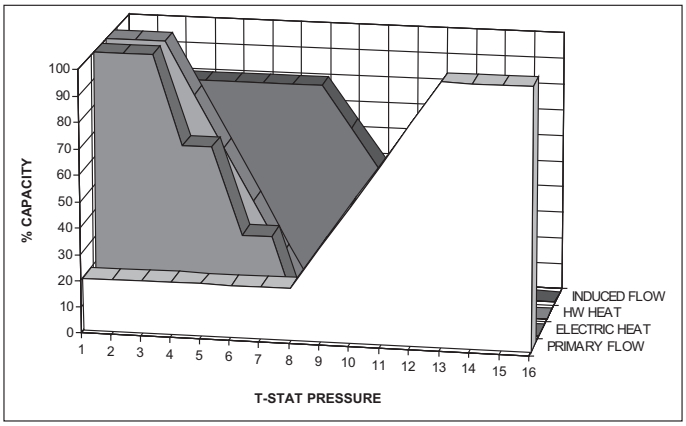

CONSTANT VOLUME FAN POWERED TERMINAL UNIT PNEUMATIC CONTROL SEQUENCE 1308

DANO, Multi-Function Control of VAV, Optional Reheat, Constant Volume Fan, Night Shutdown and Unoccupied Heating

1308 — User defined primary air flow setpoints are maintained regardless of central system pressure, while terminal fan runs continuously. Primary air flow is controlled by a multi-function reset volume controller. If necessary, the user can opt to field adjust reset start, reset span, select N.O. or N.C. damper by turning a dial, and choice of using Direct or Reverse acting thermostats. The controller is factory set to provide the following sequence of operation:

Under load for cooling, primary air flow is at maximum when the thermostat (Direct Acting), is at or above 13 psig. Primary air flow should not exceed fan air flow setpoint. When thermostat branch pressure decreases, primary air flow reduces to the user defined minimum air flow setpoint at 8 psig. As primary air flow is reduced, the constant volume terminal fan proportionally induces ceiling plenum return air or ducted return air, to maintain a constant volume of air to the occupied space.

Under a load for heating, thermostat branch pressure will continue to decrease. Optional, proportional hot water heat (3-8 psig),or sequenced on/off staged electric heat (up to 3-stages), will be initiated in response to the thermostat signal.

Unoccupied mode is in effect when the central air handling station serving primary air to the terminal, shuts down. Upon a signal loss of primary air at the terminals inlet probe, an air flow switch automatically shuts down the constant volume terminal fan. A PE switch is included in the control circuit to provide unoccupied heating. The PE switch is set to energize the constant volume terminal fan at 8 psig thermostat signal. If the terminal is equipped with optional reheat, then the reheat will be energized sequentially until the temperature in the unoccupied space has been satisfied. Otherwise, the terminal's constant volume fan will start automatically when primary air flow is sensed at the inlet.

Pneumatic air consumption of the multi-function controller is 28.8 scim at 20 psig (.472 l/m @ 138 kPa). Upon a loss of pneumatic air, the terminal damper fails open (Normally Open).

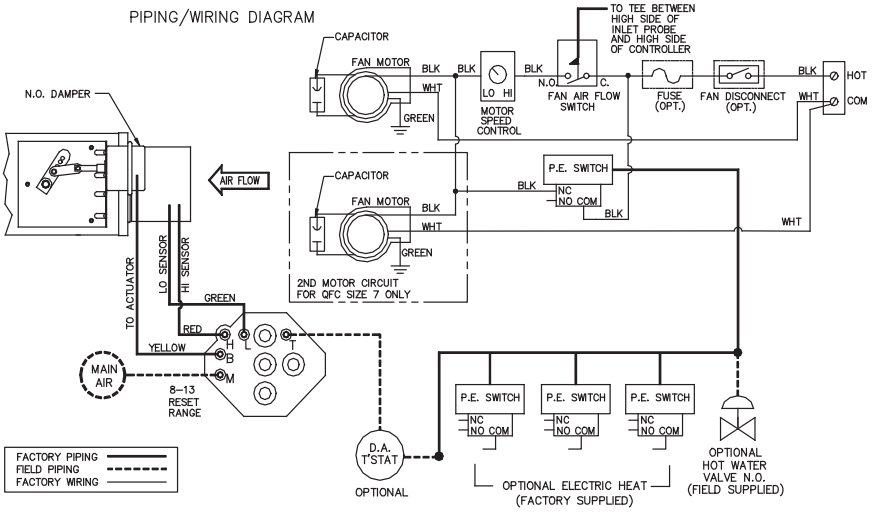

PRODUCT INFORMATION IS SUBJECT TO CHANGE WITHOUT NOTICE. 01/30/2003

JOB NAME	JOB NUMBER	LOCATION		DRAWING NUMBER
BUYER	BUYER #	REVISION	SHEET	45J/K/Q-P-1308

CODE CATALOG #	Carrier A United Technologies Company	THIS DOCUMENT IS THE PROPERTY OF CARRIER CORPORATION AND IS DELIVERED UPON THE EXPRESS CONDITION THAT THE CONTENTS WILL NOT BE DISCLOSED OR USED WITHOUT CARRIER CORPORATION'S WRITTEN CONSENT	SUBMISSION OF THESE DRAWINGS OR DOCUMENTS DOES NOT CONSTITUTE PART PERFORMANCE OR ACCEPTANCE OF CONTRACT	MULTI FUNCTION, DA-NC PNEUMATIC CONTROL SEQUENCE 1309	45 JP,KP,QP

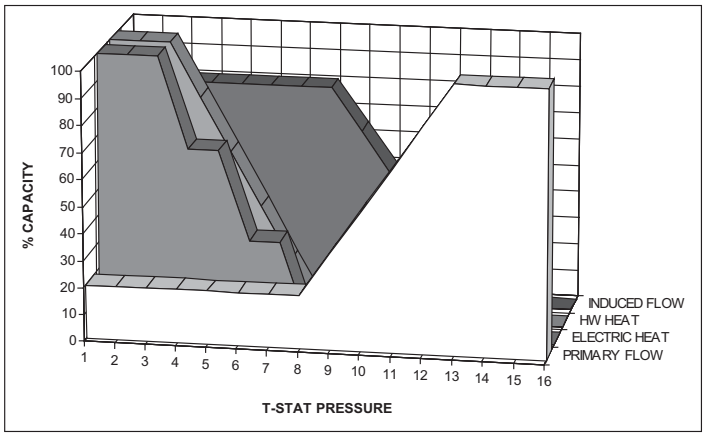

CONSTANT VOLUME FAN POWERED TERMINAL UNIT PNEUMATIC CONTROL SEQUENCE 1309

DANC, Multi-Function Control of VAV With Optional Reheat, and Constant Volume Fan Operation

1309 — User defined primary air flow setpoints are maintained regardless of central system pressure, while terminal fan runs continuously. Primary air flow is controlled by a multi-function reset volume controller. If necessary, the user can opt to field adjust reset start, reset span, select N.O. or N.C. damper by turning a dial, and choice of using Direct or Reverse acting thermostats. The controller is factory set to provide the following sequence of operation:

Under load for cooling, primary air flow is at maximum when the thermostat (Direct Acting), is at or above 13 psig. Primary air flow should not exceed fan air flow setpoint. When thermostat branch pressure decreases, primary air flow reduces to the user defined minimum air flow setpoint at 8 psig. As primary air flow is reduced, the constant volume terminal fan proportionally induces ceiling plenum return air or ducted return air, to maintain a constant volume of air to the occupied space.

Under a load for heating, thermostat branch pressure will continue to decrease. Optional, proportional hot water heat (3-8 psig),or sequenced on/off staged electric heat (up to 3-stages), will be initiated in response to the thermostat signal.

Pneumatic air consumption of the multi-function controller is 28.8 scim at 20 psig (.472 l/m @ 138 kp). Upon a loss of pneumatic air, the terminal damper fails closed (Normally Closed).

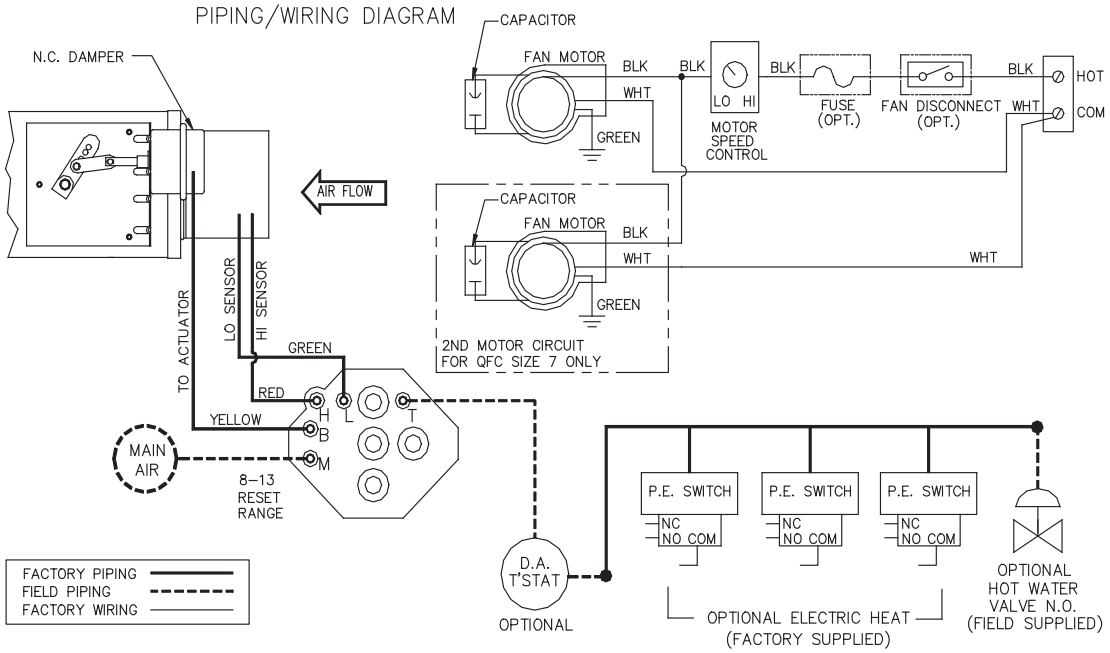

PRODUCT INFORMATION IS SUBJECT TO CHANGE WITHOUT NOTICE. 01/30/2003

JOB NAME	JOB NUMBER	LOCATION		DRAWING NUMBER
BUYER	BUYER #	REVISION	SHEET	45J/K/Q-P-1309

CODE	Carrier A United Technologies Company	THIS DOCUMENT IS THE PROPERTY OF CARRIER CORPORATION AND IS DELIVERED UPON THE EXPRESS CONDITION THAT THE CONTENTS WILL NOT BE DISCLOSED OR USED WITHOUT CARRIER CORPORATION'S WRITTEN CONSENT	SUBMISSION OF THESE DRAWINGS OR DOCUMENTS DOES NOT CONSTITUTE PART PERFORMANCE OR ACCEPTANCE OF CONTRACT	MULTI FUNCTION, DA-NC PNEUMATIC CONTROL SEQUENCE 1310	45 JP,KP,QP
CATALOG #					

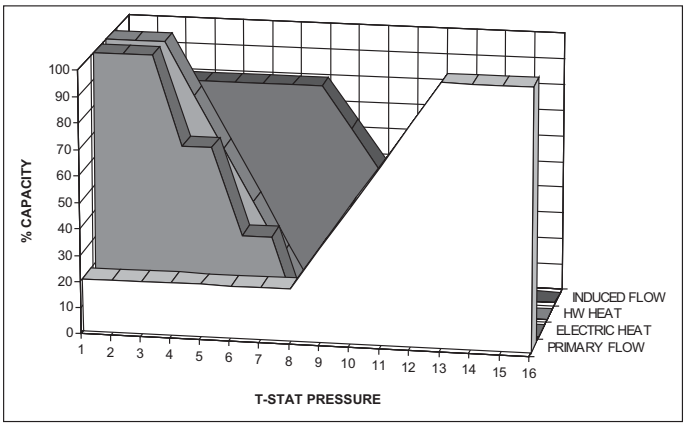

CONSTANT VOLUME FAN POWERED TERMINAL UNIT PNEUMATIC CONTROL SEQUENCE 1310

DANC, Multi-Function Control of VAV With Optional Reheat, Constant Volume Fan Operation and Night Shutdown

1310 — User defined primary air flow setpoints are maintained regardless of central system pressure, while terminal fan runs continuously. Primary air flow is controlled by a multi-function reset volume controller. If necessary, the user can opt to field adjust reset start, reset span, select N.O. or N.C. damper by turning a dial, and choice of using Direct or Reverse acting thermostats. The controller is factory set to provide the following sequence of operation:

Under load for cooling, primary air flow is at maximum when the thermostat (Direct Acting), is at or above 13 psig. Primary air flow should not exceed fan air flow setpoint. When thermostat branch pressure decreases, primary air flow reduces to the user defined minimum air flow setpoint at 8 psig. As primary air flow is reduced, the constant volume terminal fan proportionally induces ceiling plenum return air or ducted return air, to maintain a constant volume of air to the occupied space.

Under a load for heating, thermostat branch pressure will continue to decrease. Optional, proportional hot water heat (3-8 psig),or sequenced on/off staged electric heat (up to 3-stages), will be initiated in response to the thermostat signal.

Unoccupied mode is in effect when the central air handling station serving primary air to the terminal, shuts down. Upon a signal loss of primary air at the terminals inlet probe, an air flow switch automatically shuts down the constant volume terminal fan. The terminal's constant volume fan will start automatically when primary air flow is sensed at the inlet. Pneumatic air consumption of the multi-function controller is 28.8 scim at 20 psig (.472 l/m @ 138 kp). Upon a loss of pneumatic air, the terminal damper fails closed (Normally Closed).

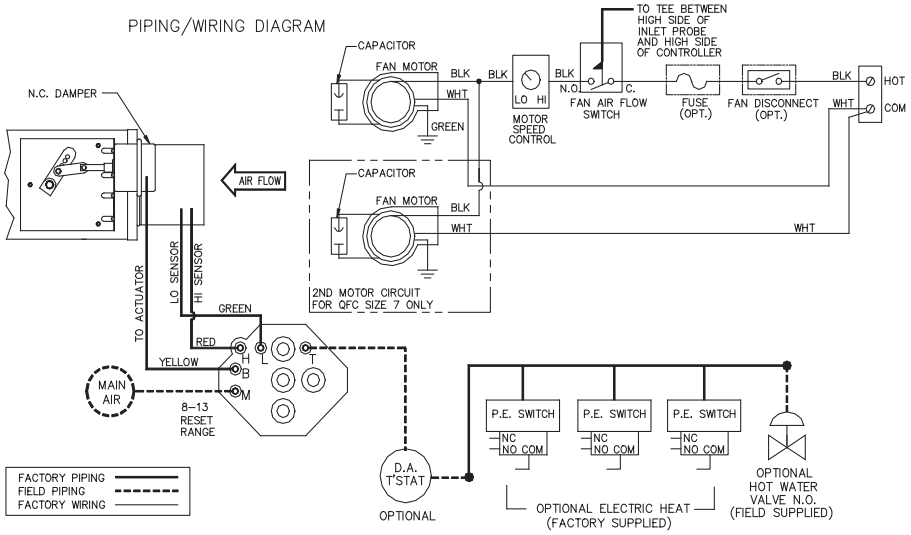

PRODUCT INFORMATION IS SUBJECT TO CHANGE WITHOUT NOTICE. 01/30/2003

JOB NAME	JOB NUMBER	LOCATION		DRAWING NUMBER
BUYER	BUYER #	REVISION	SHEET	45J/K/Q-P-1310

CODE	Carrier A United Technologies Company	THIS DOCUMENT IS THE PROPERTY OF CARRIER CORPORATION AND IS DELIVERED UPON THE EXPRESS CONDITION THAT THE CONTENTS WILL NOT BE DISCLOSED OR USED WITHOUT CARRIER CORPORATION'S WRITTEN CONSENT	SUBMISSION OF THESE DRAWINGS OR DOCUMENTS DOES NOT CONSTITUTE PART PERFORMANCE OR ACCEPTANCE OF CONTRACT	MULTI FUNCTION, DA-NC PNEUMATIC CONTROL SEQUENCE 1311	45 JP,KP,QP
CATALOG #					

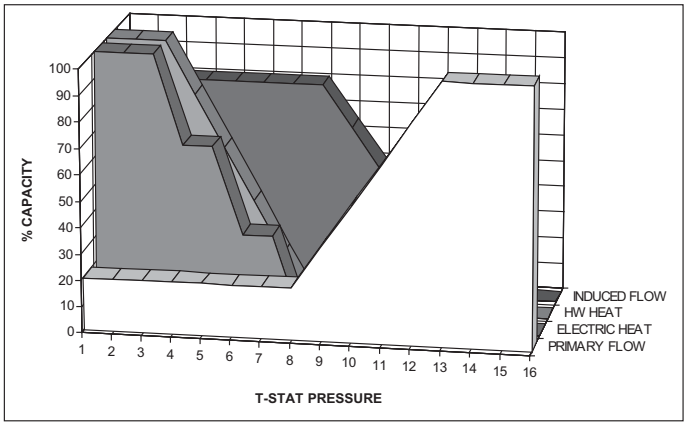

CONSTANT VOLUME FAN POWERED TERMINAL UNIT PNEUMATIC CONTROL SEQUENCE 1311

DANC, Multi-Function Control of VAV, Optional Reheat, Constant Volume Fan, Night Shutdown and Unoccupied Heating

1311 — User defined primary air flow setpoints are maintained regardless of central system pressure, while terminal fan runs continuously. Primary air flow is controlled by a multi-function reset volume controller. If necessary, the user can opt to field adjust reset start, reset span, select N.O. or N.C. damper by turning a dial, and choice of using Direct or Reverse acting thermostats. The controller is factory set to provide the following sequence of operation:

Under load for cooling, primary air flow is at maximum when the thermostat (Direct Acting), is at or above 13 psig. Primary air flow should not exceed fan air flow setpoint. When thermostat branch pressure decreases, primary air flow reduces to the user defined minimum air flow setpoint at 8 psig. As primary air flow is reduced, the constant volume terminal fan proportionally induces ceiling plenum return air or ducted return air, to maintain a constant volume of air to the occupied space.

Under a load for heating, thermostat branch pressure will continue to decrease. Optional, proportional hot water heat (3-8 psig),or sequenced on/off staged electric heat (up to 3-stages), will be initiated in response to the thermostat signal.

Unoccupied mode is in effect when the central air handling station serving primary air to the terminal, shuts down. Upon a signal loss of primary air at the terminals inlet probe, an air flow switch automatically shuts down the constant volume terminal fan. A PE switch is included in the control circuit to provide unoccupied heating. The PE switch is set to energize the constant volume terminal fan at 8 psig thermostat signal. If the terminal is equipped with optional reheat, then the reheat will be energized sequentially until the temperature in the unoccupied space has been satisfied. Otherwise, the terminal's constant volume fan will start automatically when primary air flow is sensed at the inlet. Pneumatic air consumption of the multi-function controller is 28.8 scim at 20 psig (.472 l/m @ 138 kp). Upon a loss of pneumatic air, the terminal damper fails closed (Normally Closed).

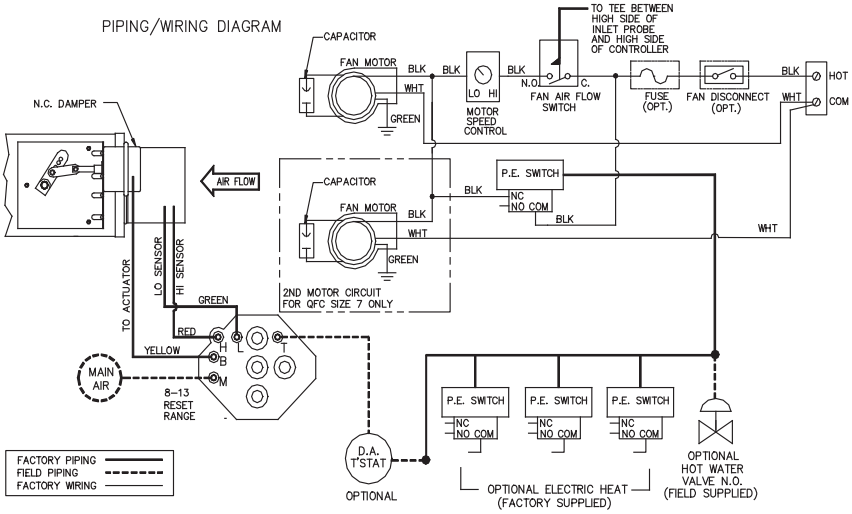

PRODUCT INFORMATION IS SUBJECT TO CHANGE WITHOUT NOTICE. 01/30/2003

JOB NAME	JOB NUMBER	LOCATION		DRAWING NUMBER
BUYER	BUYER #	REVISION	SHEET	45J/K/Q-P-1311

CODE	Carrier A United Technologies Company	THIS DOCUMENT IS THE PROPERTY OF CARRIER CORPORATION AND IS DELIVERED UPON THE EXPRESS CONDITION THAT THE CONTENTS WILL NOT BE DISCLOSED OR USED WITHOUT CARRIER CORPORATION'S WRITTEN CONSENT	SUBMISSION OF THESE DRAWINGS OR DOCUMENTS DOES NOT CONSTITUTE PART PERFORMANCE OR ACCEPTANCE OF CONTRACT	MULTI FUNCTION, RA-NC PNEUMATIC CONTROL SEQUENCE 1312	45 JP,KP,QP
CATALOG #					

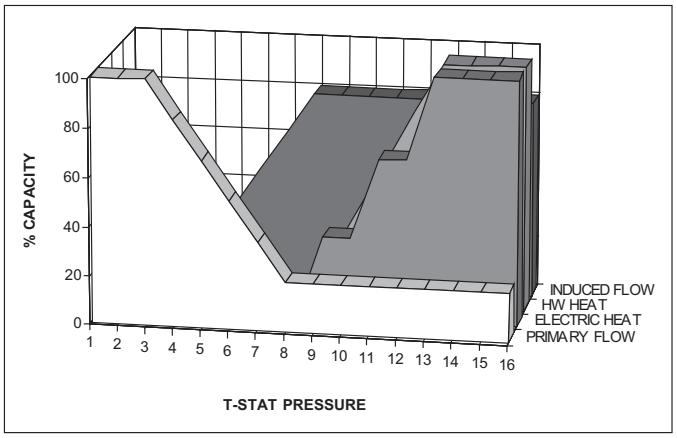

CONSTANT VOLUME FAN POWERED TERMINAL UNIT PNEUMATIC CONTROL SEQUENCE 1312

RANC, Multi-Function Control of VAV With Optional Reheat, and Constant Volume Fan Operation

1312 — User defined primary air flow setpoints are maintained regardless of central system pressure, while terminal fan runs continuously. Primary air flow is controlled by a multi-function reset volume controller. If necessary, the user can opt to field adjust reset start, reset span, select N.O. or N.C. damper by turning a dial, and choice of using Direct or Reverse acting thermostats. The controller is factory set to provide the following sequence of operation:

Under load for cooling, primary air flow is at maximum when the thermostat (Reverse Acting), is at or below 3 psig. Primary air flow should not exceed fan air flow setpoint. When thermostat branch pressure increases, primary air flow reduces to the user defined minimum air flow setpoint at 8 psig. As primary air flow is reduced, the constant volume terminal fan proportionally induces ceiling plenum return air or ducted return air, to maintain a constant volume of air to the occupied space.

Under a load for heating, thermostat branch pressure will continue to increase. Optional, proportional hot water heat (8-13 psig),or sequenced on/off staged electric heat (up to 3-stages), will be initiated in response to the thermostat signal. Pneumatic air consumption of the multi-function controller is 28.8 scim at 20 psig (.472 l/m @ 138 kPa). Upon a loss of Subject pneumatic air, the terminal damper fails closed (Normally Closed).

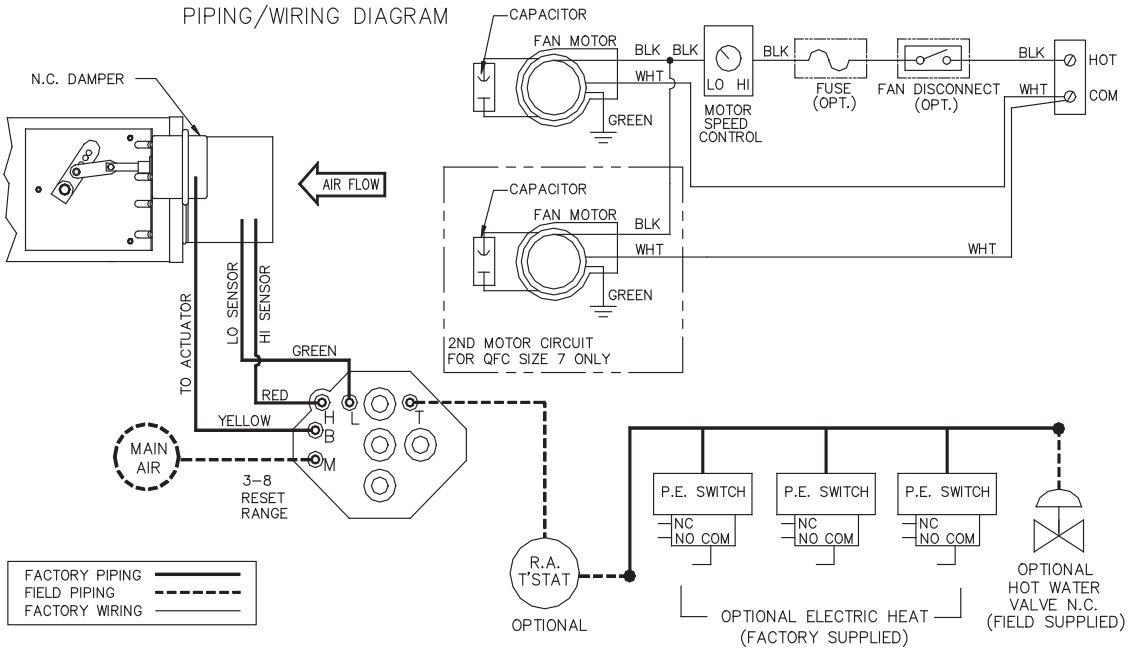

PRODUCT INFORMATION IS SUBJECT TO CHANGE WITHOUT NOTICE. 01/30/2003

JOB NAME	JOB NUMBER	LOCATION		DRAWING NUMBER
BUYER	BUYER #	REVISION	SHEET	45J/K/Q-P-1312

CODE CATALOG #	Carrier A United Technologies Company	THIS DOCUMENT IS THE PROPERTY OF CARRIER CORPORATION AND IS DELIVERED UPON THE EXPRESS CONDITION THAT THE CONTENTS WILL NOT BE DISCLOSED OR USED WITHOUT CARRIER CORPORATION'S WRITTEN CONSENT	SUBMISSION OF THESE DRAWINGS OR DOCUMENTS DOES NOT CONSTITUTE PART PERFORMANCE OR ACCEPTANCE OF CONTRACT	MULTI FUNCTION, RA-NC PNEUMATIC CONTROL SEQUENCE 1313	45 JP,KP,QP

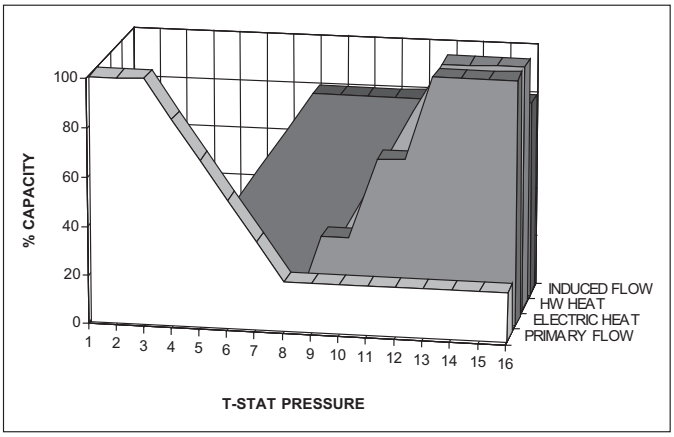

CONSTANT VOLUME FAN POWERED TERMINAL UNIT PNEUMATIC CONTROL SEQUENCE 1313

RANC, Multi-Function Control of VAV With Optional Reheat, Constant Volume Fan Operation and Night Shutdown

1313 — User defined primary air flow setpoints are maintained regardless of central system pressure, while terminal fan runs continuously. Primary air flow is controlled by a multi-function reset volume controller. If necessary, the user can opt to field adjust reset start, reset span, select N.O. or N.C. damper by turning a dial, and choice of using Direct or Reverse acting thermostats. The controller is factory set to provide the following sequence of operation:

Under load for cooling, primary air flow is at maximum when the thermostat (Reverse Acting), is at or above 3 psig. Primary air flow should not exceed fan air flow setpoint. When thermostat branch pressure increases, primary air flow reduces to the user defined minimum air flow setpoint at 8 psig. As primary air flow is reduced, the constant volume terminal fan proportionally induces ceiling plenum return air or ducted return air, to maintain a constant volume of air to the occupied space.

Under a load for heating, thermostat branch pressure will continue to increase. Optional, proportional hot water heat (8-13 psig),or sequenced on/off staged electric heat (up to 3-stages), will be initiated in response to the thermostat signal.

Unoccupied mode is in effect when the central air handling station serving primary air to the terminal, shuts down. Upon a signal loss of primary air at the terminals inlet probe, an air flow switch automatically shuts down the constant volume terminal fan. The terminal's constant volume fan will start automatically when primary air flow is sensed at the inlet. Pneumatic air consumption of the multi-function controller is 28.8 scim at 20 psig (.472 l/m @ 138 kp). Upon a loss of pneumatic air, the terminal damper fails closed (Normally Closed).

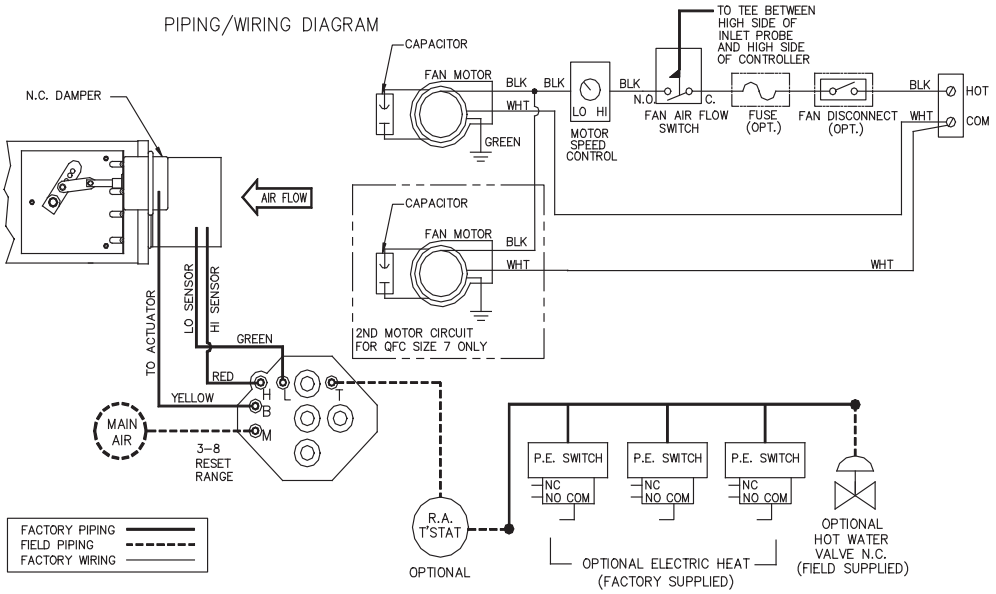

PRODUCT INFORMATION IS SUBJECT TO CHANGE WITHOUT NOTICE. 01/30/2003

JOB NAME	JOB NUMBER	LOCATION		DRAWING NUMBER
BUYER	BUYER #	REVISION	SHEET	45J/K/Q-P-1313

CODE CATALOG #	Carrier A United Technologies Company	THIS DOCUMENT IS THE PROPERTY OF CARRIER CORPORATION AND IS DELIVERED UPON THE EXPRESS CONDITION THAT THE CONTENTS WILL NOT BE DISCLOSED OR USED WITHOUT CARRIER CORPORATION'S WRITTEN CONSENT	SUBMISSION OF THESE DRAWINGS OR DOCUMENTS DOES NOT CONSTITUTE PART PERFORMANCE OR ACCEPTANCE OF CONTRACT	MULTI FUNCTION, RA-NC PNEUMATIC CONTROL SEQUENCE 1314	45 JP,KP,QP

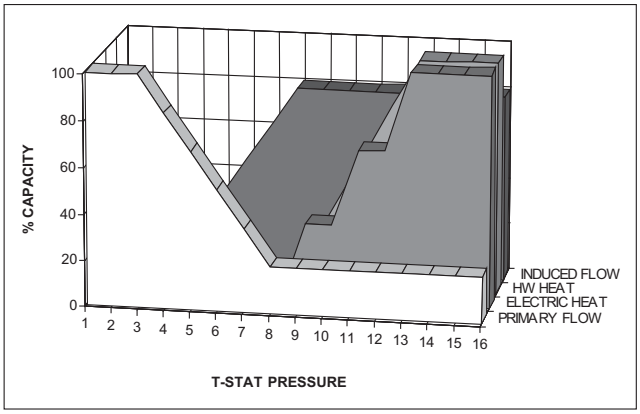

CONSTANT VOLUME FAN POWERED TERMINAL UNIT PNEUMATIC CONTROL SEQUENCE 1314

RANC, Multi-Function Control of VAV, Optional Reheat, Constant Volume Fan Operation, Night Shutdown and Unoccupied Heating

1314 — User defined primary air flow setpoints are maintained regardless of central system pressure, while terminal fan runs continuously. Primary air flow is controlled by a multi-function reset volume controller. If necessary, the user can opt to field adjust reset start, reset span, select N.O. or N.C. damper by turning a dial, and choice of using Direct or Reverse acting thermostats. The controller is factory set to provide the following sequence of operation:

Under load for cooling, primary air flow is at maximum when the thermostat (Reverse Acting), is at or above 3 psig. Primary air flow should not exceed fan air flow setpoint. When thermostat branch pressure increases, primary air flow reduces to the user defined minimum air flow setpoint at 8 psig. As primary air flow is reduced, the constant volume terminal fan proportionally induces ceiling plenum return air or ducted return air, to maintain a constant volume of air to the occupied space.

Under a load for heating, thermostat branch pressure will continue to increase. Optional, proportional hot water heat (8-13 psig),or sequenced on/off staged electric heat (up to 3-stages), will be initiated in response to the thermostat signal.

Unoccupied mode is in effect when the central air handling station serving primary air to the terminal, shuts down. Upon a signal loss of primary air at the terminals inlet probe, an air flow switch automatically shuts down the constant volume terminal fan. A PE switch is included in the control circuit to provide unoccupied heating. The PE switch is set to energize the constant volume terminal fan at 8 psig thermostat signal. If the terminal is equipped with optional reheat, then the reheat will be energized sequentially until the temperature in the unoccupied space has been satisfied. Otherwise, the terminal's constant volume fan will start automatically when primary air flow is sensed at the inlet. Pneumatic air consumption of the multi-function controller is 28.8 scim at 20 psig (.472 l/m @ 138 kPa). Upon a loss of pneumatic air, the terminal damper fails closed (Normally Closed).

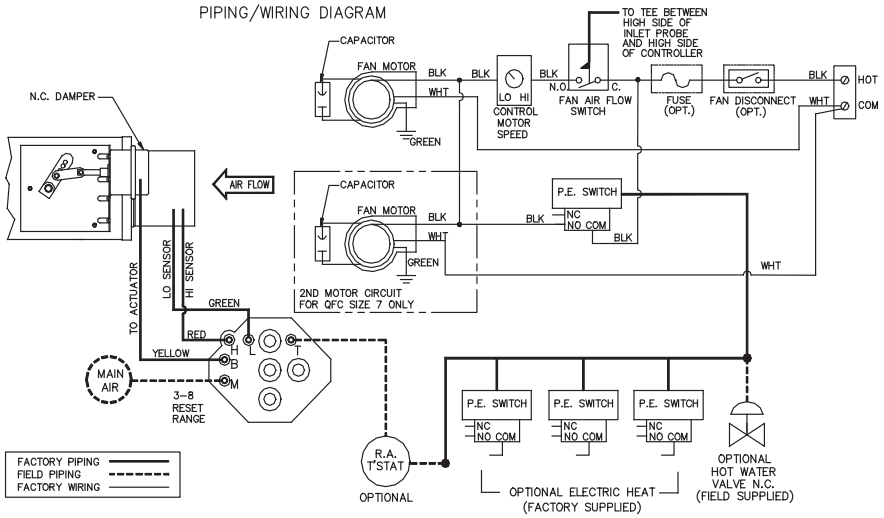

PRODUCT INFORMATION IS SUBJECT TO CHANGE WITHOUT NOTICE. 01/30/2003

JOB NAME	JOB NUMBER	LOCATION		DRAWING NUMBER
BUYER	BUYER #	REVISION	SHEET	45J/K/Q-P-1314

CODE CATALOG #	Carrier A United Technologies Company	THIS DOCUMENT IS THE PROPERTY OF CARRIER CORPORATION AND IS DELIVERED UPON THE EXPRESS CONDITION THAT THE CONTENTS WILL NOT BE DISCLOSED OR USED WITHOUT CARRIER CORPORATION'S WRITTEN CONSENT	SUBMISSION OF THESE DRAWINGS OR DOCUMENTS DOES NOT CONSTITUTE PART PERFORMANCE OR ACCEPTANCE OF CONTRACT	MULTI FUNCTION, RA-NO PNEUMATIC CONTROL SEQUENCE 1315	45 JP,KP,QP

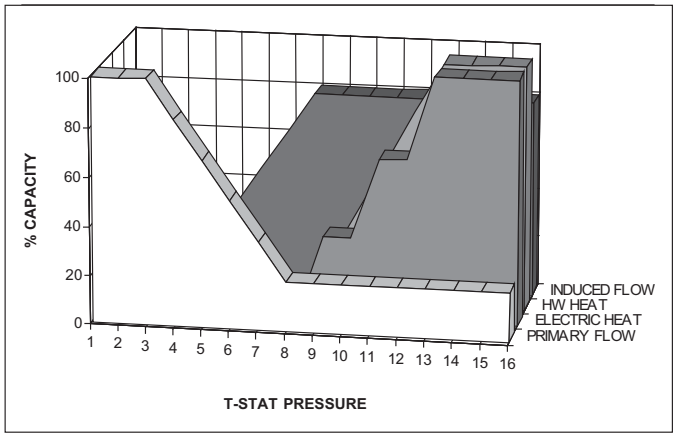

CONSTANT VOLUME FAN POWERED TERMINAL UNIT PNEUMATIC CONTROL SEQUENCE 1315

RANO, Multi-Function Control of VAV With Optional Reheat, and Constant Volume Fan Operation

1315 — User defined primary air flow setpoints are maintained regardless of central system pressure, while terminal fan runs continuously. Primary air flow is controlled by a multi-function reset volume controller. If necessary, the user can opt to field adjust reset start, reset span, select N.O. or N.C. damper by turning a dial, and choice of using Direct or Reverse acting thermostats. The controller is factory set to provide the following sequence of operation:

Under load for cooling, primary air flow is at maximum when the thermostat (Reverse Acting), is at or below 3 psig. Primary air flow should not exceed fan air flow setpoint. When thermostat branch pressure increases, primary air flow reduces to the user defined minimum air flow setpoint at 8 psig. As primary air flow is reduced, the constant volume terminal fan proportionally induces ceiling plenum return air or ducted return air, to maintain a constant volume of air to the occupied space.

Under a load for heating, thermostat branch pressure will continue to increase. Optional, proportional hot water heat (8-13 psig),or sequenced on/off staged electric heat (up to 3-stages), will be initiated in response to the thermostat signal. Pneumatic air consumption of the multi-function controller is 28.8 scim at 20 psig (.472 l/m @ 138 kPa). Upon a loss of pneumatic air, the terminal damper fails open (Normally Open).

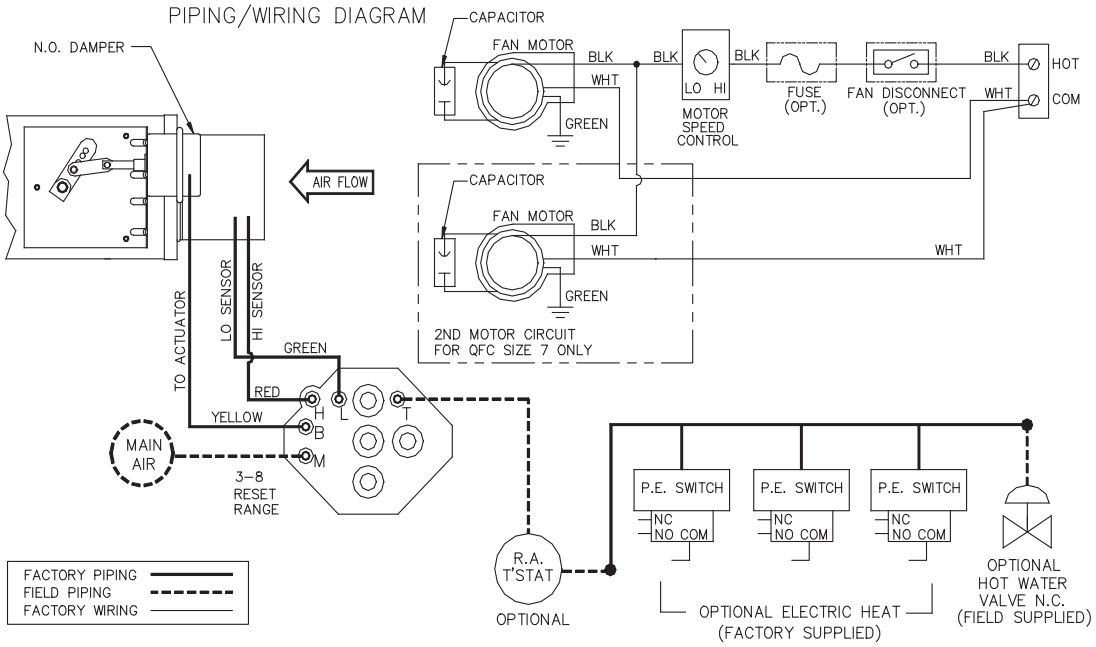

PRODUCT INFORMATION IS SUBJECT TO CHANGE WITHOUT NOTICE. 01/30/2003

JOB NAME	JOB NUMBER	LOCATION		DRAWING NUMBER
BUYER	BUYER #	REVISION	SHEET	45J/K/Q-P-1315

CODE	Carrier A United Technologies Company	THIS DOCUMENT IS THE PROPERTY OF CARRIER CORPORATION AND IS DELIVERED UPON THE EXPRESS CONDITION THAT THE CONTENTS WILL NOT BE DISCLOSED OR USED WITHOUT CARRIER CORPORATION'S WRITTEN CONSENT	SUBMISSION OF THESE DRAWINGS OR DOCUMENTS DOES NOT CONSTITUTE PART PERFORMANCE OR ACCEPTANCE OF CONTRACT	MULTI FUNCTION, RA-NO PNEUMATIC CONTROL SEQUENCE 1316	45 JP,KP,QP
CATALOG #					

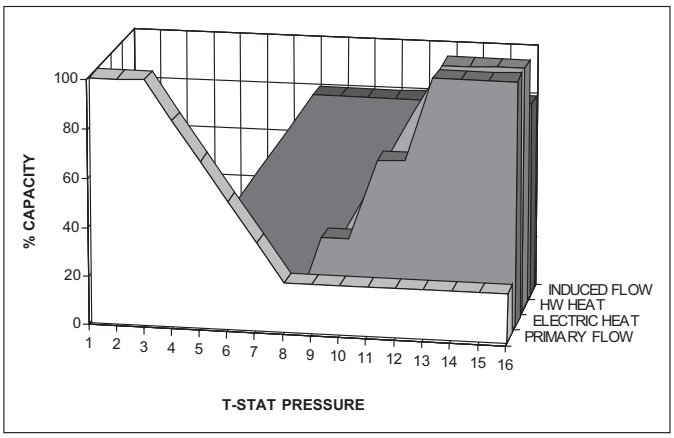

CONSTANT VOLUME FAN POWERED TERMINAL UNIT PNEUMATIC CONTROL SEQUENCE 1316

RANO, Multi-Function Control of VAV With Optional Reheat, Constant Volume Fan Operation and Night Shutdown

1316 — User defined primary air flow setpoints are maintained regardless of central system pressure, while terminal fan runs continuously. Primary air flow is controlled by a multi-function reset volume controller. If necessary, the user can opt to field adjust reset start, reset span, select N.O. or N.C. damper by turning a dial, and choice of using Direct or Reverse acting thermostats. The controller is factory set to provide the following sequence of operation:

Under load for cooling, primary air flow is at maximum when the thermostat (Reverse Acting), is at or above 3 psig. Primary air flow should not exceed fan air flow setpoint. When thermostat branch pressure increases, primary air flow reduces to the user defined minimum air flow setpoint at 8 psig. As primary air flow is reduced, the constant volume terminal fan proportionally induces ceiling plenum return air or ducted return air, to maintain a constant volume of air to the occupied space.

Under a load for heating, thermostat branch pressure will continue to increase. Optional, proportional hot water heat (8-13 psig),or sequenced on/off staged electric heat (up to 3-stages), will be initiated in response to the thermostat signal.

Unoccupied mode is in effect when the central air handling station serving primary air to the terminal, shuts down. Upon a signal loss of primary air at the terminals inlet probe, an air flow switch automatically shuts down the constant volume terminal fan. The terminal's constant volume fan will start automatically when primary air flow is sensed at the inlet. Pneumatic air consumption of the multi-function controller is 28.8 scim at 20 psig (.472 l/m @ 138 kp). Upon a loss of pneumatic air, the terminal damper fails open (Normally Open).

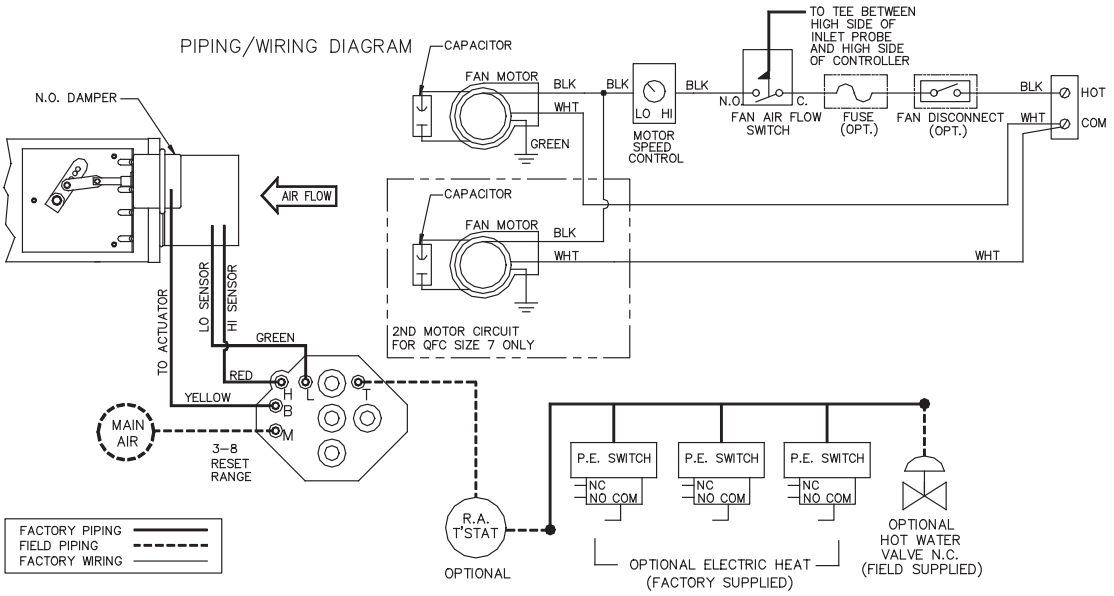

PRODUCT INFORMATION IS SUBJECT TO CHANGE WITHOUT NOTICE. 01/30/2003

JOB NAME	JOB NUMBER	LOCATION		DRAWING NUMBER
BUYER	BUYER #	REVISION	SHEET	45J/K/Q-P-1316

CODE CATALOG #	Carrier A United Technologies Company	THIS DOCUMENT IS THE PROPERTY OF CARRIER CORPORATION AND IS DELIVERED UPON THE EXPRESS CONDITION THAT THE CONTENTS WILL NOT BE DISCLOSED OR USED WITHOUT CARRIER CORPORATION'S WRITTEN CONSENT	SUBMISSION OF THESE DRAWINGS OR DOCUMENTS DOES NOT CONSTITUTE PART PERFORMANCE OR ACCEPTANCE OF CONTRACT	MULTI FUNCTION, RA-NO PNEUMATIC CONTROL SEQUENCE 1317	45 JP,KP,QP

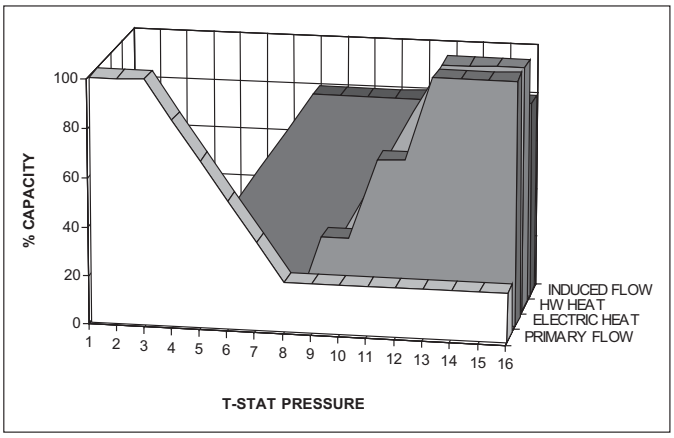

CONSTANT VOLUME FAN POWERED TERMINAL UNIT PNEUMATIC CONTROL SEQUENCE 1317

RANO, Multi-Function Control of VAV, Optional Reheat, Constant Volume Fan Operation, Night Shutdown and Unoccupied Heating

1317 — User defined primary air flow setpoints are maintained regardless of central system pressure, while terminal fan runs continuously. Primary air flow is controlled by a multi-function reset volume controller. If necessary, the user can opt to field adjust reset start, reset span, select N.O. or N.C. damper by turning a dial, and choice of using Direct or Reverse acting thermostats. The controller is factory set to provide the following sequence of operation:

Under load for cooling, primary air flow is at maximum when the thermostat (Reverse Acting), is at or above 3 psig. Primary air flow should not exceed fan air flow setpoint. When thermostat branch pressure increases, primary air flow reduces to the user defined minimum air flow setpoint at 8 psig. As primary air flow is reduced, the constant volume terminal fan proportionally induces ceiling plenum return air or ducted return air, to maintain a constant volume of air to the occupied space.

Under a load for heating, thermostat branch pressure will continue to increase. Optional, proportional hot water heat (8-13 psig),or sequenced on/off staged electric heat (up to 3-stages), will be initiated in response to the thermostat signal.

Unoccupied mode is in effect when the central air handling station serving primary air to the terminal, shuts down. Upon a signal loss of primary air at the terminals inlet probe, an air flow switch automatically shuts down the constant volume terminal fan. A PE switch is included in the control circuit to provide unoccupied heating. The PE switch is set to energize the constant volume terminal fan at 8 psig thermostat signal. If the terminal is equipped with optional reheat, then the reheat will be energized sequentially until the temperature in the unoccupied space has been satisfied. Otherwise, the terminal's constant volume fan will start automatically when primary air flow is sensed at the inlet. Pneumatic air consumption of the multi-function controller is 28.8 scim at 20 psig (.472 l/m @ 138 kPa). Upon a loss of pneumatic air, the terminal damper fails open (Normally Open).

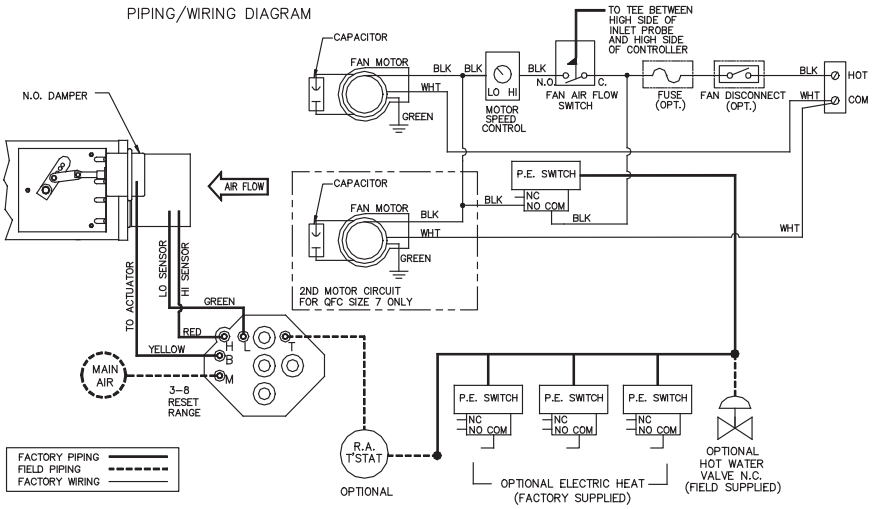

PRODUCT INFORMATION IS SUBJECT TO CHANGE WITHOUT NOTICE. 01/30/2003

JOB NAME	JOB NUMBER	LOCATION		DRAWING NUMBER
BUYER	BUYER #	REVISION	SHEET	45J/K/Q-P-1317

CODE CATALOG #	Carrier A United Technologies Company	THIS DOCUMENT IS THE PROPERTY OF CARRIER CORPORATION AND IS DELIVERED UPON THE EXPRESS CONDITION THAT THE CONTENTS WILL NOT BE DISCLOSED OR USED WITHOUT CARRIER CORPORATION'S WRITTEN CONSENT	SUBMISSION OF THESE DRAWINGS OR DOCUMENTS DOES NOT CONSTITUTE PART PERFORMANCE OR ACCEPTANCE OF CONTRACT	SINGLE FUNCTION, DA-NO PNEUMATIC CONTROL SEQUENCE 1400	45 MP,NP,RP

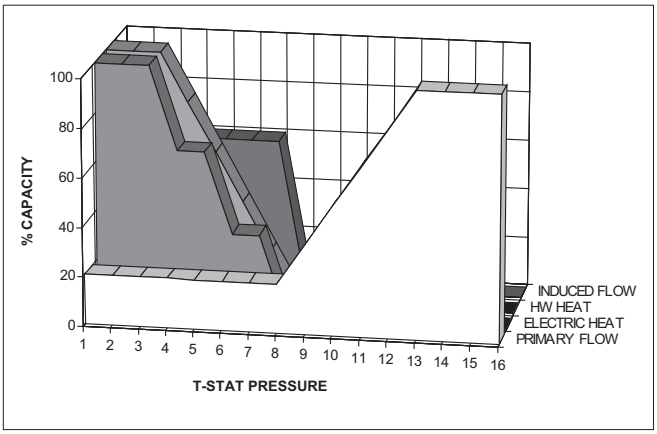

VARIABLE VOLUME FAN POWERED TERMINAL UNIT PNEUMATIC CONTROL SEQUENCE 1400

DANO, Single Function Control of VAV With Optional Reheat, and Variable Fan Operation

1400 — User defined primary air flow setpoints are maintained regardless of central system pressure. The terminal fan runs intermittently, during a requirement for heating only.

Under load for cooling, primary air flow is at maximum when the thermostat (Direct Acting), is at or above 13 psig. The terminal unit fan is not energized. As the temperature in the space decreases the thermostat branch pressure decreases, and primary air flow reduces to the user defined minimum air flow setpoint at 8 psig. Variable Air Volume (VAV) for cooling is delivered to the occupied space.

Under a load for heating, thermostat branch pressure will continue to decrease. The thermostat will energize the terminal unit fan at 8 psig. The terminal unit fan is the first stage for providing heat to the occupied space. Optional, proportional hot water heat (3-8 psig),or sequenced on/off staged electric heat (up to 3-stages), will be sequentially initiated in response to the thermostat signal.

Pneumatic air consumption of the single function controller is 14.4 scim at 20 psig (.236 l/m @ 138 kp). Upon a loss of pneumatic air, the terminal damper fails open (Normally Open).

PIPING/WIRING DIAGRAM

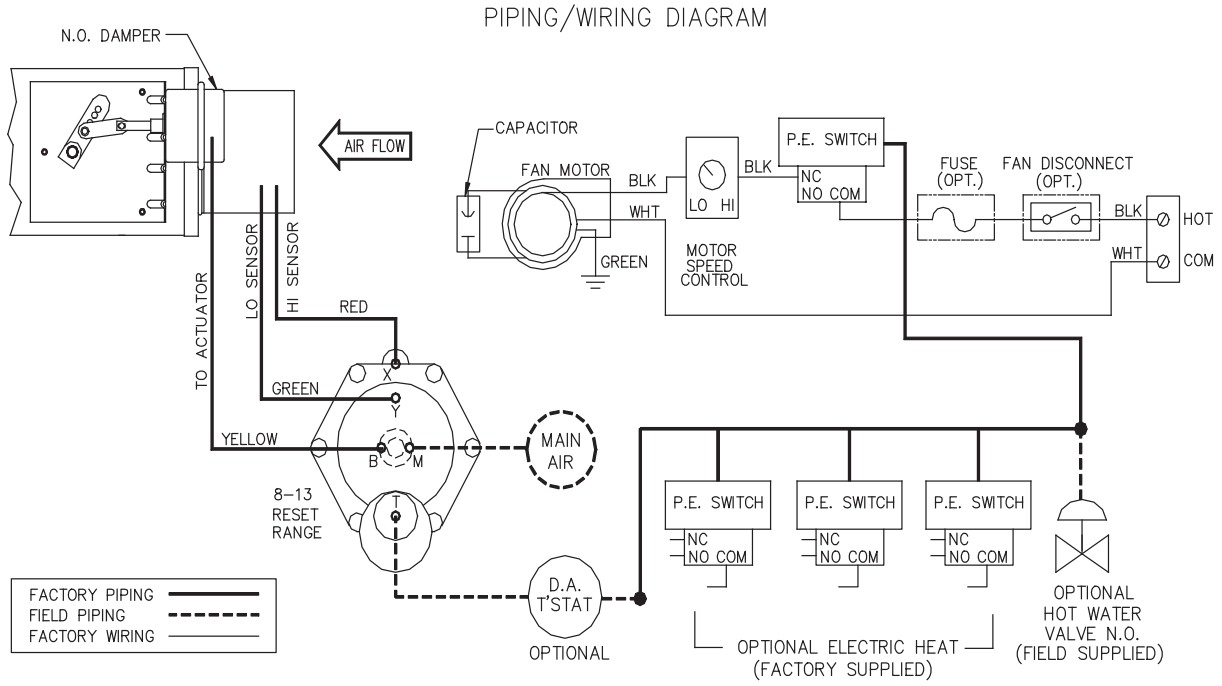

PRODUCT INFORMATION IS SUBJECT TO CHANGE WITHOUT NOTICE. 01/30/2003

JOB NAME	JOB NUMBER	LOCATION		DRAWING NUMBER
BUYER	BUYER #	REVISION	SHEET	45M/N/R-P-1400

CODE CATALOG #	Carrier A United Technologies Company	THIS DOCUMENT IS THE PROPERTY OF CARRIER CORPORATION AND IS DELIVERED UPON THE EXPRESS CONDITION THAT THE CONTENTS WILL NOT BE DISCLOSED OR USED WITHOUT CARRIER CORPORATION'S WRITTEN CONSENT	SUBMISSION OF THESE DRAWINGS OR DOCUMENTS DOES NOT CONSTITUTE PART PERFORMANCE OR ACCEPTANCE OF CONTRACT	SINGLE FUNCTION, RA-NC PNEUMATIC CONTROL SEQUENCE 1401	45 MP,NP,RP

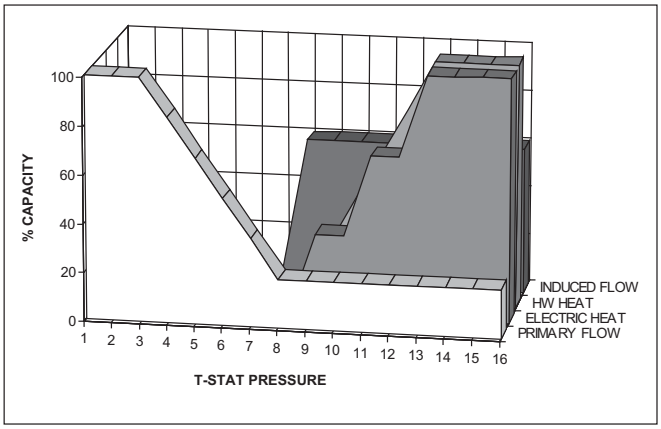

VARIABLE VOLUME FAN POWERED TERMINAL UNIT PNEUMATIC CONTROL SEQUENCE 1401

RANC, Single Function Control of VAV With Optional Reheat, and Variable Fan Operation

1401 — User defined primary air flow setpoints are maintained regardless of central system pressure. The terminal fan runs intermittently, during a requirement for heating only.

Under load for cooling, primary air flow is at maximum when the thermostat (Reverse Acting), is at or above 3 psig. The terminal unit fan is not energized. As the temperature in the space decreases the thermostat branch pressure decreases, and primary air flow reduces to the user defined minimum air flow setpoint at 8 psig. Variable Air Volume (VAV) for cooling is delivered to the occupied space.

Under a load for heating, thermostat branch pressure will continue to decrease. The thermostat will energize the terminal unit fan at 8 psig. The terminal unit fan is the first stage for providing heat to the occupied space. Optional, proportional hot water heat (8-13 psig),or sequenced on/off staged electric heat (up to 3-stages), will be sequentially initiated in response to the thermostat signal.

Pneumatic air consumption of the single function controller is 14.4 scim at 20 psig (.236 l/m @ 138 kp). Upon a loss of pneumatic air, the terminal damper fails closed (Normally Closed).

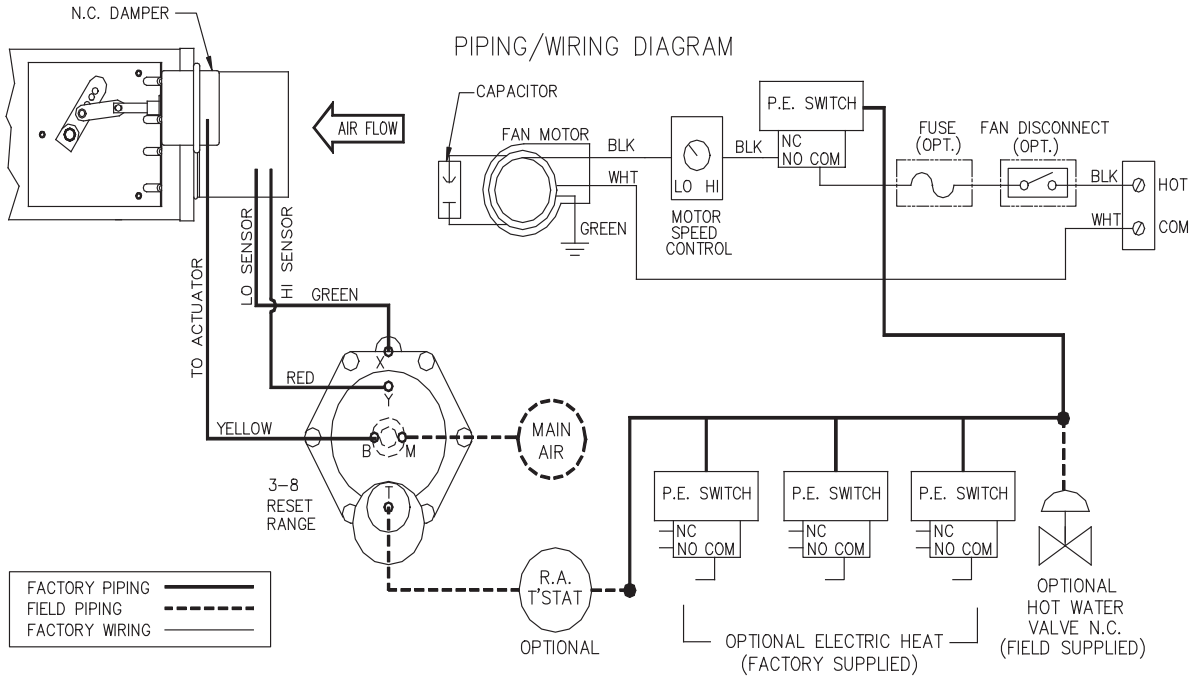

PRODUCT INFORMATION IS SUBJECT TO CHANGE WITHOUT NOTICE. 01/30/2003

JOB NAME	JOB NUMBER	LOCATION		DRAWING NUMBER
BUYER	BUYER #	REVISION	SHEET	45M/N/R-P-1401

CODE CATALOG #	Carrier A United Technologies Company	THIS DOCUMENT IS THE PROPERTY OF CARRIER CORPORATION AND IS DELIVERED UPON THE EXPRESS CONDITION THAT THE CONTENTS WILL NOT BE DISCLOSED OR USED WITHOUT CARRIER CORPORATION'S WRITTEN CONSENT	SUBMISSION OF THESE DRAWINGS OR DOCUMENTS DOES NOT CONSTITUTE PART PERFORMANCE OR ACCEPTANCE OF CONTRACT	MULTI-FUNCTION, DA-NO PNEUMATIC CONTROL SEQUENCE 1402	45 MP,NP,RP

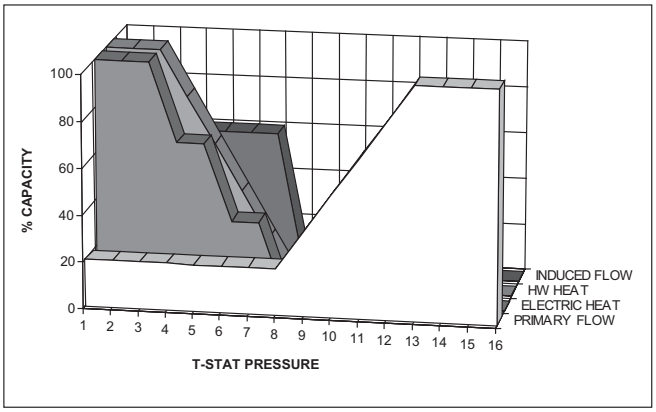

VARIABLE VOLUME FAN POWERED TERMINAL UNIT PNEUMATIC CONTROL SEQUENCE 1402

DANO, Multi-Function Control of VAV With Optional Reheat, and Variable Fan Operation

1402 — User defined primary air flow setpoints are maintained regardless of central system pressure. The terminal fan runs intermittently, during a requirement for heating only.

Under load for cooling, primary air flow is at maximum when the thermostat (Direct Acting), is at or above 13 psig. The terminal unit fan is not energized. As the temperature in the space decreases the thermostat branch pressure decreases, and primary air flow reduces to the user defined minimum air flow setpoint at 8 psig. Variable Air Volume (VAV) for cooling is delivered to the occupied space.

Under a load for heating, thermostat branch pressure will continue to decrease. The thermostat will energize the terminal unit fan at 8 psig. The terminal unit fan is the first stage for providing heat to the occupied space. Optional, proportional hot water heat (3-8 psig),or sequenced on/off staged electric heat (up to 3-stages), will be sequentially initiated in response to the thermostat signal.

Pneumatic air consumption of the multi-function controller is 28.8 scim at 20 psig (.472 l/m @ 138 kp). Upon a loss of pneumatic air, the terminal damper fails open (Normally Open).

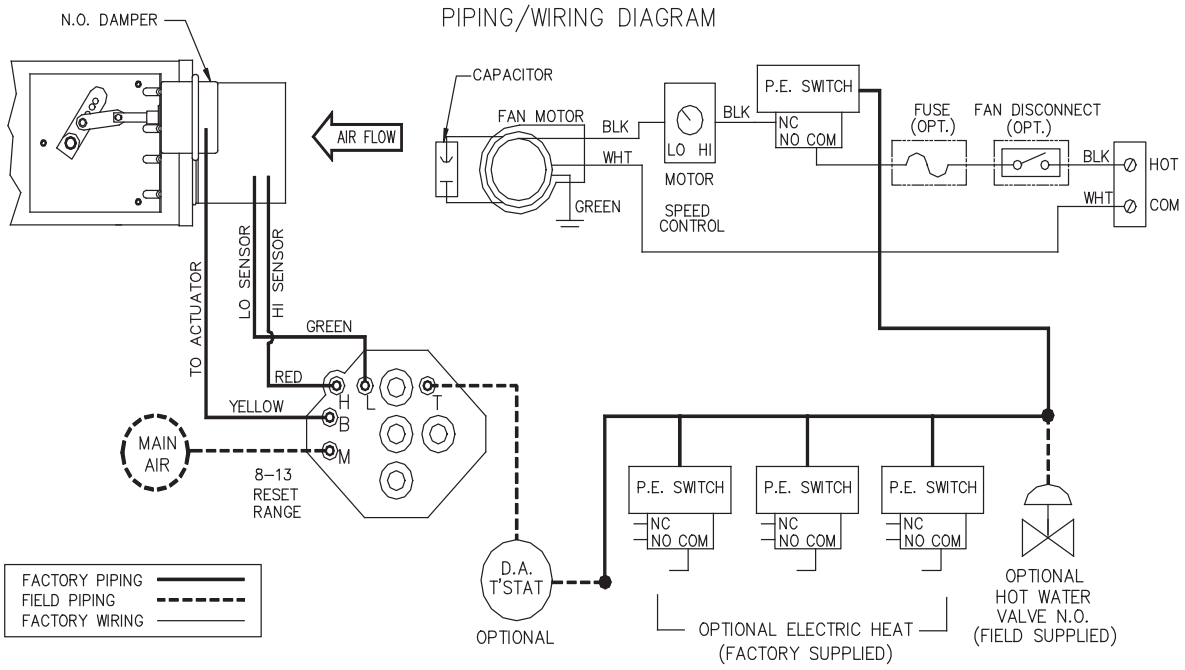

PRODUCT INFORMATION IS SUBJECT TO CHANGE WITHOUT NOTICE. 01/30/2003

JOB NAME	JOB NUMBER	LOCATION		DRAWING NUMBER
BUYER	BUYER #	REVISION	SHEET	45M/N/R-P-1402

CODE	Carrier A United Technologies Company	THIS DOCUMENT IS THE PROPERTY OF CARRIER CORPORATION AND IS DELIVERED UPON THE EXPRESS CONDITION THAT THE CONTENTS WILL NOT BE DISCLOSED OR USED WITHOUT CARRIER CORPORATION'S WRITTEN CONSENT	SUBMISSION OF THESE DRAWINGS OR DOCUMENTS DOES NOT CONSTITUTE PART PERFORMANCE OR ACCEPTANCE OF CONTRACT	MULTI-FUNCTION, RA-NO PNEUMATIC CONTROL SEQUENCE 1403	45 MP,NP,RP
CATALOG #					

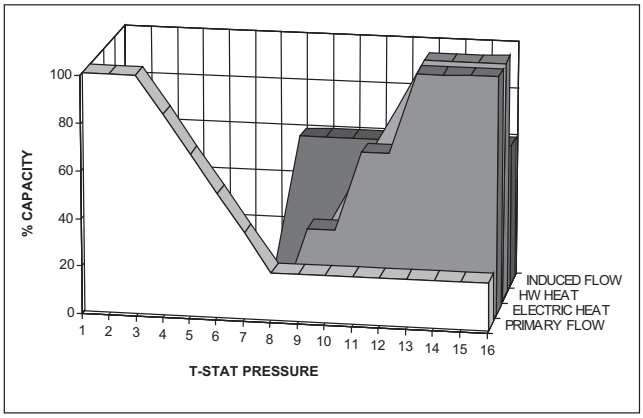

VARIABLE VOLUME FAN POWERED TERMINAL UNIT PNEUMATIC CONTROL SEQUENCE 1403

RANO, Multi-Function Control of VAV With Optional Reheat, and Variable Fan Operation

1403 — User defined primary air flow setpoints are maintained regardless of central system pressure. The terminal fan runs intermittently, during a requirement for heating only.

Under load for cooling, primary air flow is at maximum when the thermostat (Reverse Acting), is at or above 3 psig. The terminal unit fan is not energized. As the temperature in the space decreases the thermostat branch pressure decreases, and primary air flow reduces to the user defined minimum air flow setpoint at 8 psig. Variable Air Volume (VAV) for cooling is delivered to the occupied space.

Under a load for heating, thermostat branch pressure will continue to decrease. The thermostat will energize the terminal unit fan at 8 psig. The terminal unit fan is the first stage for providing heat to the occupied space. Optional, proportional hot water heat (8-13 psig),or sequenced on/off staged electric heat (up to 3-stages), will be sequentially initiated in response to the thermostat signal.

Pneumatic air consumption of the multi-function controller is 28.8 scim at 20 psig (.472 l/m @ 138 kp). Upon a loss of pneumatic air, the terminal damper fails open (Normally Open).

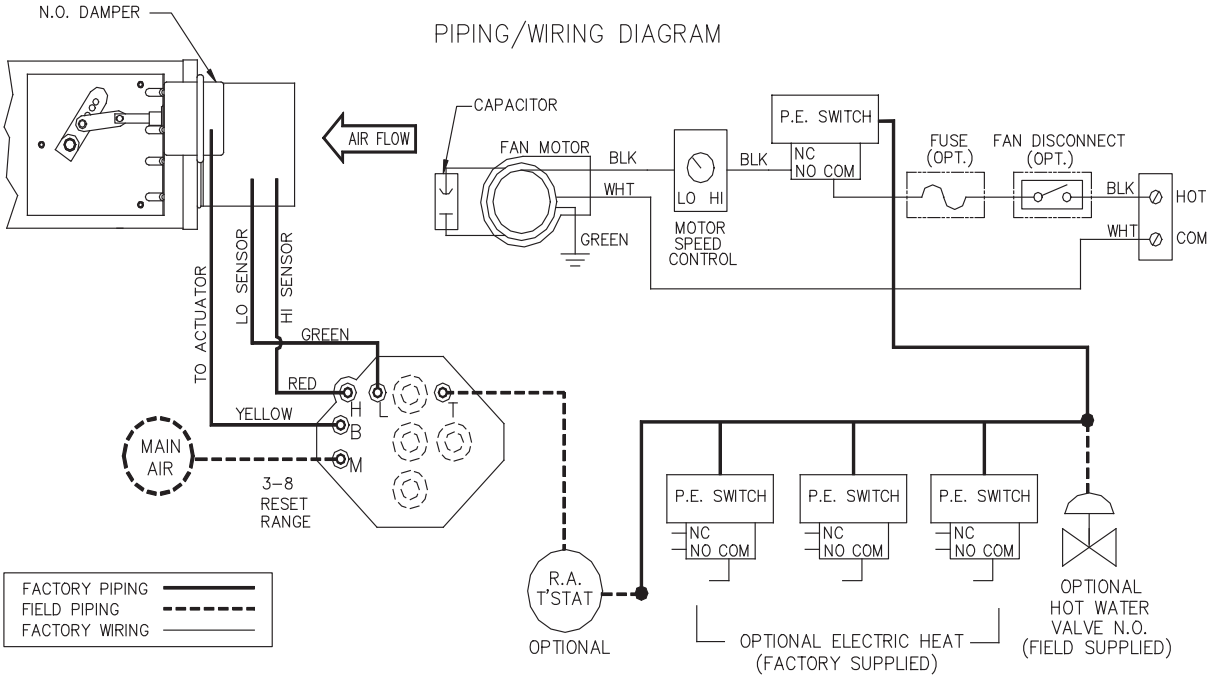

PRODUCT INFORMATION IS SUBJECT TO CHANGE WITHOUT NOTICE. 01/30/2003

JOB NAME	JOB NUMBER	LOCATION		DRAWING NUMBER
BUYER	BUYER #	REVISION	SHEET	45M/N/R-P-1403

CODE CATALOG #	Carrier A United Technologies Company	THIS DOCUMENT IS THE PROPERTY OF CARRIER CORPORATION AND IS DELIVERED UPON THE EXPRESS CONDITION THAT THE CONTENTS WILL NOT BE DISCLOSED OR USED WITHOUT CARRIER CORPORATION'S WRITTEN CONSENT	SUBMISSION OF THESE DRAWINGS OR DOCUMENTS DOES NOT CONSTITUTE PART PERFORMANCE OR ACCEPTANCE OF CONTRACT	MULTI-FUNCTION, DA-NC PNEUMATIC CONTROL SEQUENCE 1404	45 MP,NP,RP

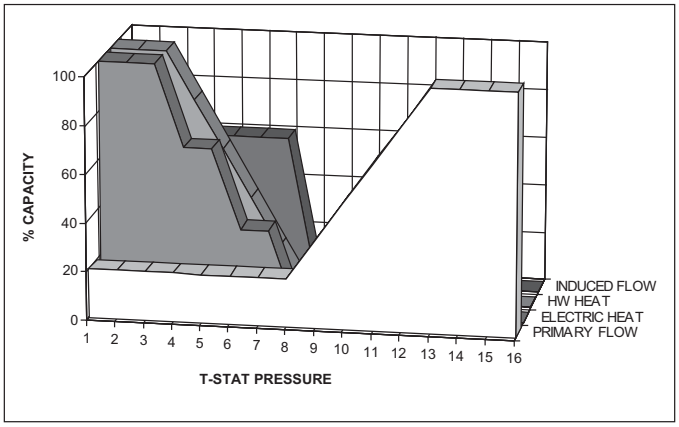

VARIABLE VOLUME FAN POWERED TERMINAL UNIT PNEUMATIC CONTROL SEQUENCE 1404

DANC, Multi-Function Control of VAV With Optional Reheat, and Variable Fan Operation

1404 — User defined primary air flow setpoints are maintained regardless of central system pressure. The terminal fan runs intermittently, during a requirement for heating only.

Under load for cooling, primary air flow is at maximum when the thermostat (Direct Acting), is at or above 13 psig. The terminal unit fan is not energized. As the temperature in the space decreases the thermostat branch pressure decreases, and primary air flow reduces to the user defined minimum air flow setpoint at 8 psig. Variable Air Volume (VAV) for cooling is delivered to the occupied space.

Under a load for heating, thermostat branch pressure will continue to decrease. The thermostat will energize the terminal unit fan at 8 psig. The terminal unit fan is the first stage for providing heat to the occupied space. Optional, proportional hot water heat (3-8 psig),or sequenced on/off staged electric heat (up to 3-stages), will be sequentially initiated in response to the thermostat signal.

Pneumatic air consumption of the multi-function controller is 28.8 scim at 20 psig (.472 l/m @ 138 kp). Upon a loss of pneumatic air, the terminal damper fails closed (Normally Closed).

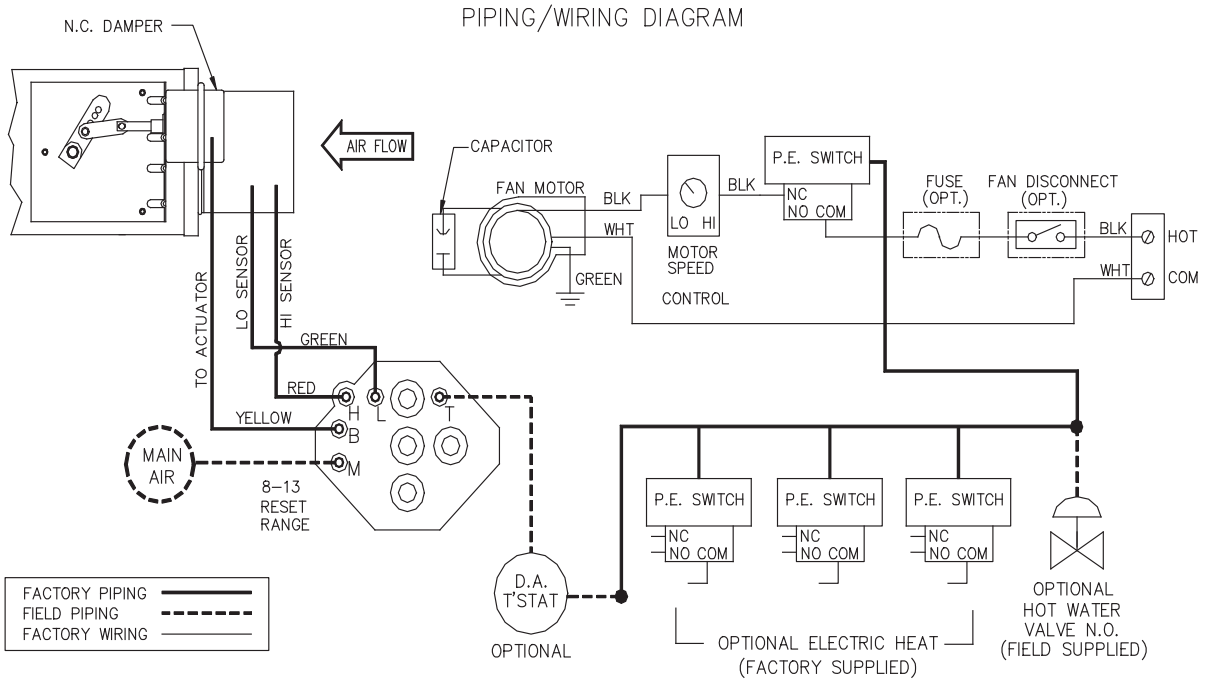

PRODUCT INFORMATION IS SUBJECT TO CHANGE WITHOUT NOTICE. 01/30/2003

JOB NAME	JOB NUMBER	LOCATION		DRAWING NUMBER
BUYER	BUYER #	REVISION	SHEET	45M/N/R-P-1404

CODE	Carrier A United Technologies Company	THIS DOCUMENT IS THE PROPERTY OF CARRIER CORPORATION AND IS DELIVERED UPON THE EXPRESS CONDITION THAT THE CONTENTS WILL NOT BE DISCLOSED OR USED WITHOUT CARRIER CORPORATION'S WRITTEN CONSENT	SUBMISSION OF THESE DRAWINGS OR DOCUMENTS DOES NOT CONSTITUTE PART PERFORMANCE OR ACCEPTANCE OF CONTRACT	MULTI-FUNCTION, RA-NC PNEUMATIC CONTROL SEQUENCE 1405	45 MP,NP,RP
CATALOG #					

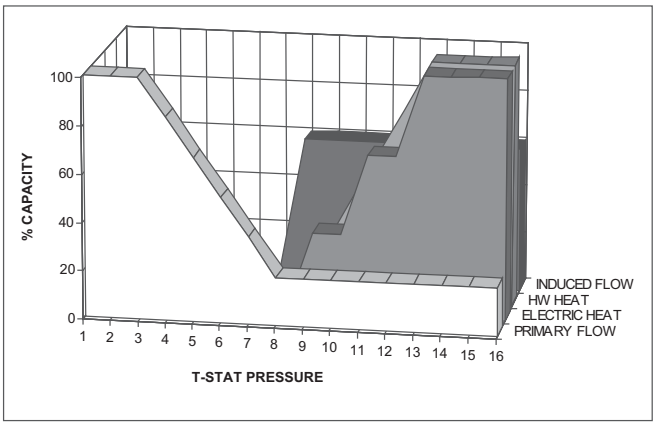

VARIABLE VOLUME FAN POWERED TERMINAL UNIT PNEUMATIC CONTROL SEQUENCE 1405

RANC, Multi-Function Control of VAV With Optional Reheat, and Variable Fan Operation

1405 — User defined primary air flow setpoints are maintained regardless of central system pressure. The terminal fan runs intermittently, during a requirement for heating only.

Under load for cooling, primary air flow is at maximum when the thermostat (Reverse Acting), is at or above 3 psig. The terminal unit fan is not energized. As the temperature in the space decreases the thermostat branch pressure decreases, and primary air flow reduces to the user defined minimum air flow setpoint at 8 psig. Variable Air Volume (VAV) for cooling is delivered to the occupied space.

Under a load for heating, thermostat branch pressure will continue to decrease. The thermostat will energize the terminal unit fan at 8 psig. The terminal unit fan is the first stage for providing heat to the occupied space. Optional, proportional hot water heat (8-13 psig),or sequenced on/off staged electric heat (up to 3-stages), will be sequentially initiated in response to the thermostat signal.

Pneumatic air consumption of the multi-function controller is 28.8 scim at 20 psig (.472 l/m @ 138 kp). Upon a loss of pneumatic air, the terminal damper fails closed (Normally Closed).

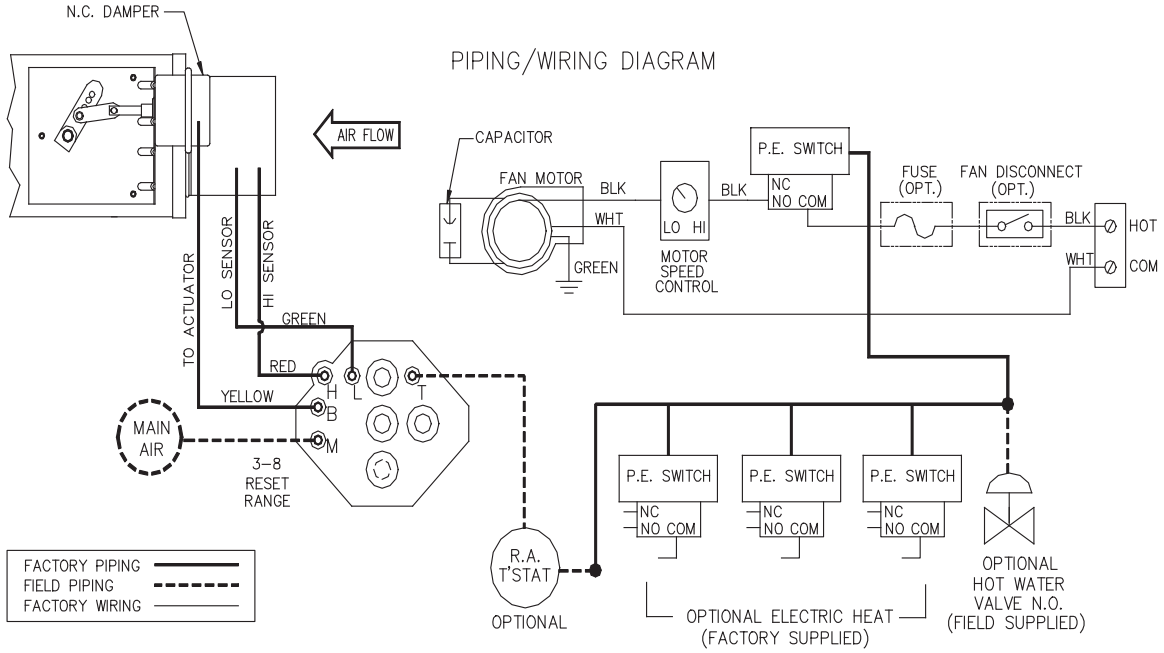

PRODUCT INFORMATION IS SUBJECT TO CHANGE WITHOUT NOTICE. 01/30/2003

JOB NAME	JOB NUMBER	LOCATION		DRAWING NUMBER
BUYER	BUYER #	REVISION	SHEET	45M/N/R-P-1405

Copyright 2010 Carrier Corporation