OWNER'S MANUAL

High-Wall Fan Coil Unit

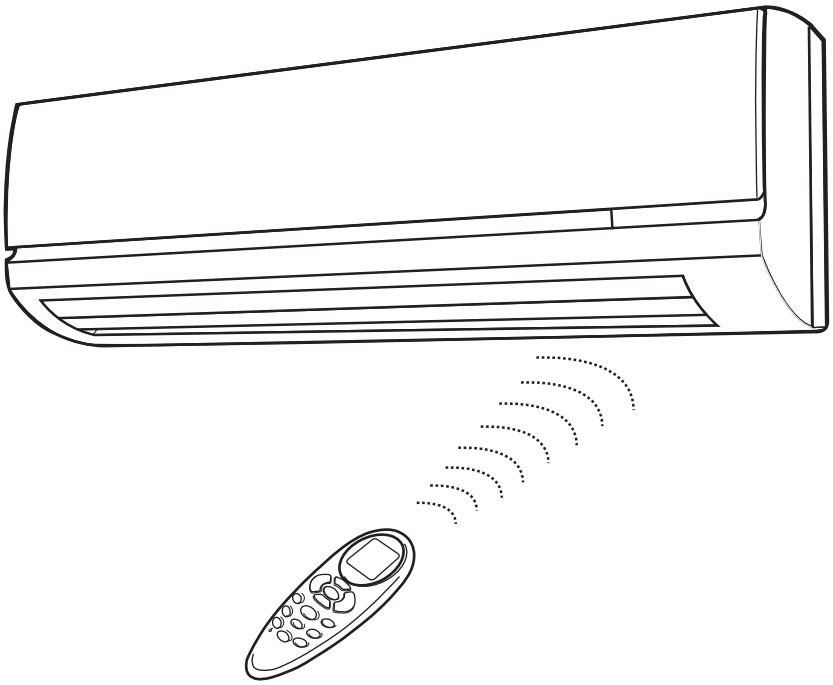

CONTENTS

Page

GENERAL 2,3
- OPERATING MODES 2
- REMOTE CONTROL 2

OPERATION 3-9
- REMOTE CONTROL OPERATION 3
- INDOOR UNIT DISPLAY 5
- EMERGENCY OPERATION 5
- PRESSING THE ON/OFF BUTTON 5
- SELECTING AN OPERATING MODE 6
- SETTING THE TEMPERATURE SET POINT 6
- SELECTING THE DIRECTION OF LOUVER POSITION 6
- SELECTING THE FAN SPEED 7
- USING THE TURBO SETTING 7
- USING THE ECONOMICAL SETTING 7
- SETTING THE ON TIMER 7
- SETTING THE OFF TIMER 8
- SETTING THE DAILY TIMER 8
- SETTING THE SLEEP TIMER 8
- USING THE IONIZER FUNCTION 9
- REMOTE CONTROL ADDRESS SELECTION 9
- RESETTING THE REMOTE CONTROL 9
- OPERATING CONDITIONS 9
- TIME DELAY 9
- MINIMUM OPERATION TIME 9
- HEATING FEATURES 9
- DEFROST OPERATION 9
- AUTO RECOVERY 9
- INDOOR UNIT FROST PREVENTION IN COOLING AND DEHUMIDIFICATION MODE 9

CLEANING, MAINTENANCE AND TROUBLESHOOTING 9-11
- PERIODIC MAINTENANCE 9
- CLEANING THE COIL 9
- AIR FILTERS 10
- IONIZER 10
- INDOOR UNIT FRONT PANEL 10
- PREPARING FOR A LONG SHUTDOWN PERIOD 10
- SYSTEM OPERATION CHECK LIST 10
- ENERGY SAVING RECOMMENDATIONS 10
- TROUBLESHOOTING 10

Manufacturer reserves the right to discontinue, or change at any time, specifications or designs without notice and without incurring obligations.

GENERAL

The high wall fan coil unit provides quiet, maximum comfort. In addition to cooling and/or heating, the high wall fan coil unit matched with an outdoor condensing unit will filter and dehumidify the air in the room to provide maximum comfort. See Fig. 1.

> IMPORTANT: The high wall fan coil unit should be installed by authorized personnel only, using approved tubing and accessories. If technical assistance, service or repair is needed, contact the installer or call 1-800-227-7437.

The high wall fan coil unit can be set up and operated from the remote control (provided). See Fig. 2. If the remote is misplaced, the system can be operated from the "Auto" setting on the unit.

Operating Modes — The high wall fan coil unit has 5 operating modes:

- Fan only
- Auto (heat pump models only)
- Heating (heat pump models only)
- Cooling
- Dehumidification

FAN ONLY — In Fan Only mode, the system filters and circulates room air without changing room air temperature.

AUTO — In Auto mode, the system will automatically cool or heat the room according to the user selected set point.

If the room temperature is 2° F lower than the set point, the system will operate in Heating mode. If the room temperature is 2° F higher than the set point, the system will operate in Cooling mode.

HEATING — In Heating mode, the system heats and filters room air.

COOLING — In Cooling mode, the system cools, dries and filters room air.

DEHUMIDIFICATION — In Dehumidification mode, the system dries, filters and slightly cools room air temperature. This mode ***does not*** take the place of a dehumidifier.

NOTE: Two settings are available for use with selected modes. The Turbo setting provides maximum capacity. The Economical setting provides quiet, energy saving operation. Cooling and Heating modes can be operated in either the Turbo or the Economical setting. The Dehumidification mode can be operated in the Turbo setting, and the Auto mode can be operated in the Economical setting. See the Using the Turbo Setting or Using the Economical Setting sections for more information.

Remote Control (Fig. 2-6) — The remote control transmits commands to set up and operate the system. The controller has a window display panel that shows the current system status. The controller can be secured to a surface when used with the mounting rack provided. See Fig. 2.

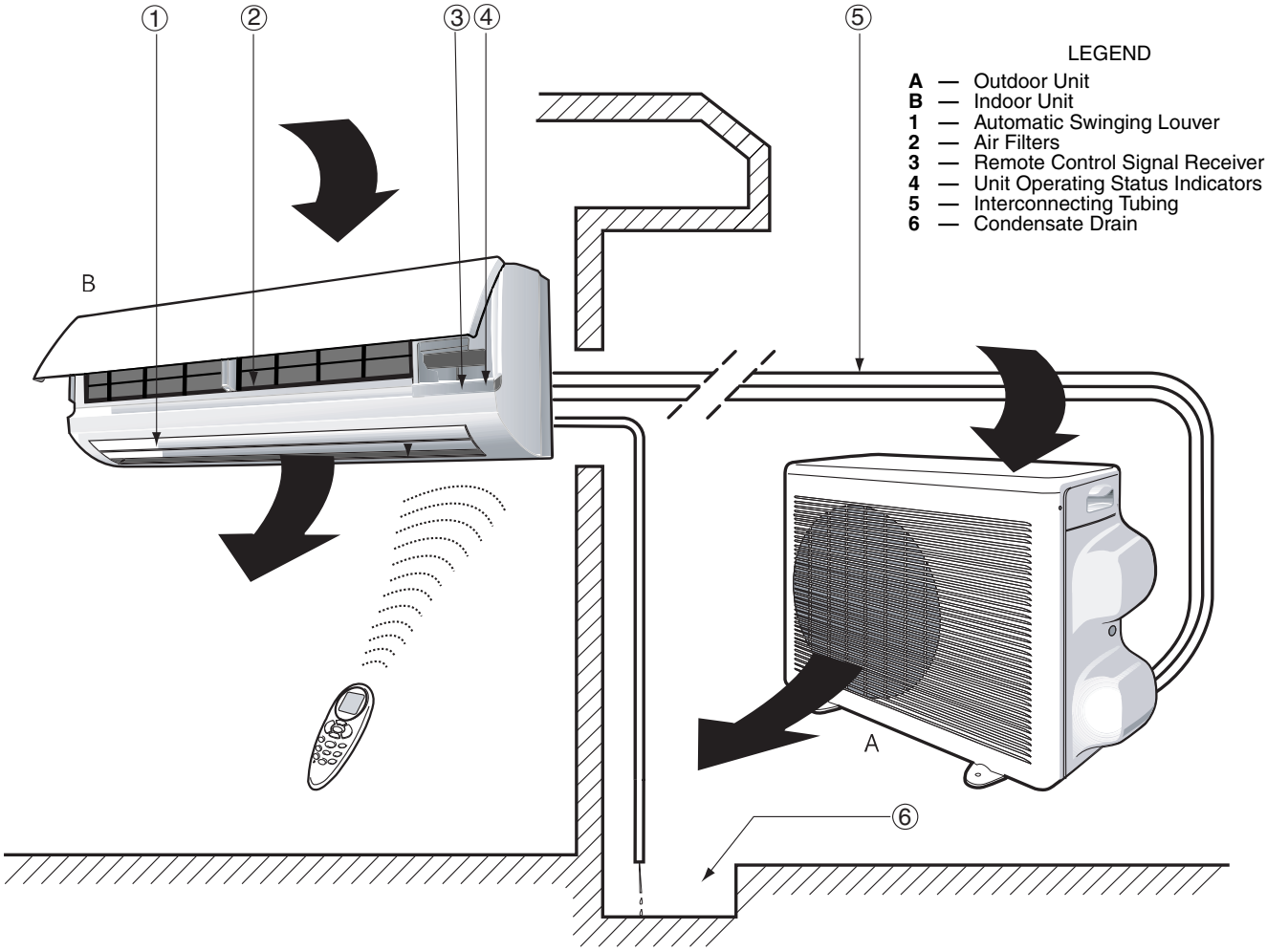

Fig. 1 — Indoor and Outdoor Unit Components

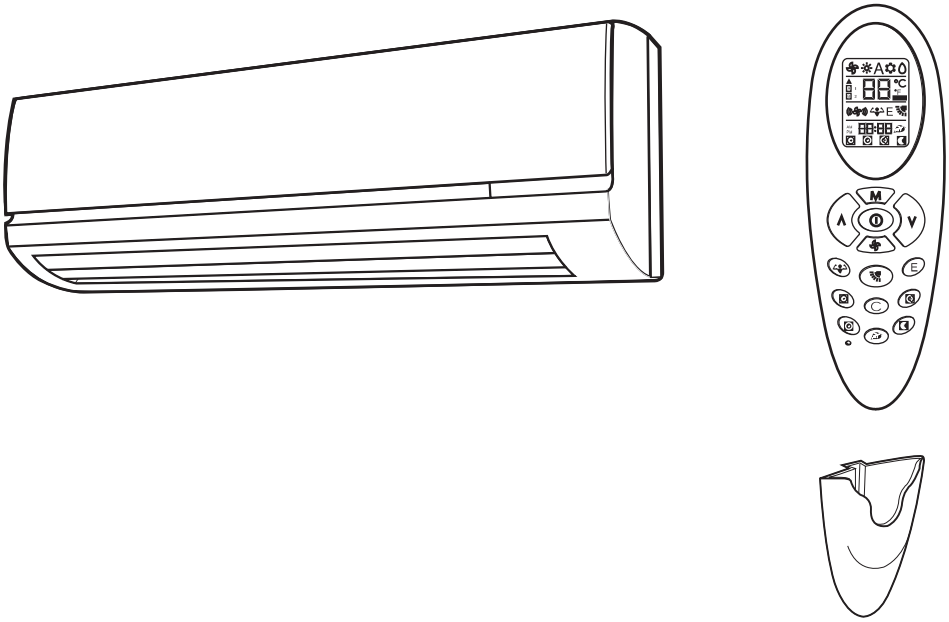

Fig. 2 — High Wall Fan Coil Unit and Remote Control

⚠ CAUTION

Handle the controller with care and avoid getting the controller wet. Damage to the device may result.

IMPORTANT: The remote control can operate the unit from a distance of up to 16 ft as long as there are not any obstructions.

The remote control can perform the following functions:

- Turn the system ON and OFF
- Select operating mode
- Adjust room air temperature set point and fan speed
- Set time periods for automatic system operation

BATTERY INSTALLATION — Two AAA 1.5-v alkaline batteries (included) are required for operation of the remote control. See Fig. 3 for battery location.

After new batteries have been inserted, press the reset button with a paper clip or the tip of a pen. Do not use old batteries or batteries of different types, as this may cause the unit to malfunction. Batteries should only be changed after turning the unit off. The average battery life during normal use is approximately one year. If the air conditioner does not operate normally after replacing the batteries, refit the batteries and press the reset button again after 5 seconds.

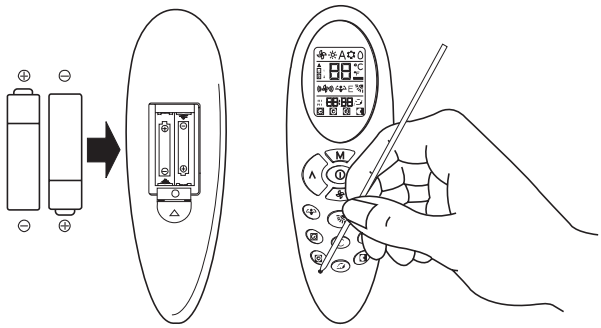

Fig. 3 — Location of Batteries on Remote Control

To install batteries:

1. Remove battery compartment cover by pushing the tab up and removing it from the remote.
2. Insert batteries being sure to follow polarity markings inside battery compartment.
3. Replace battery compartment cover.

NOTE: Replace batteries whenever "Low battery" indicator appears on remote control display panel. See Fig. 4.

DISPLAY SCREEN — There are five operating mode indicators that appear on the remote control display screen. See Fig. 4.

OPERATION

Remote Control Operation — The remote control has 3 buttons (see Fig. 5) used for operating and controlling the system:

- M — changes operating mode
- ∧ ∨ — adjust temperature
- ⏻ — turns the system on or off.

NOTE: When transmitting a command from the remote control to the unit, be sure to point the controller toward the right side of the unit. See Fig. 6. The unit will confirm receipt of a command by sounding an audible beep.

IMPORTANT: If no changes are made within 10 seconds, the remote control will return to its previous setting.

SETTING THE TIME ON THE REMOTE CONTROL (Current Time Adjusting **C** and Reset Buttons) — Press current time adjusting button **C** to adjust the current time. Press the reset button with the tip of a pen or a paperclip if the remote control is not operating properly or after replacing the batteries.

1. With the remote control ON or OFF, press **C** for at least 5 seconds.
2. The current hour flashes. Press either ∧ or ∨ to set the current hour. Press **C** again to move to set the minutes.
3. Once the current time is set, press **C** to confirm it.

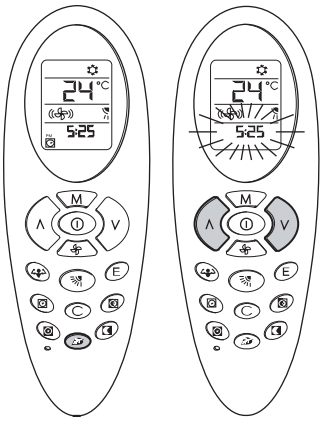

FAN SPEED — To select the Fan mode and change the Fan Speed, follow the steps below:

1. Press the Mode button to select the Fan mode.
2. Press the Fan Speed button to select desired fan speed.

NOTE: If unit is operating in Dehumidification mode the fan will only operate in low speed and cannot be changed.

TEMPERATURE SETTINGS — The temperature set point can be easily changed by pointing the controller toward the unit and pressing the increase/decrease temperature set point buttons until the desired temperature appears on screen.

AIRFLOW DIRECTION — The louvers can be manually operated by pressing the Louver button to change airflow direction. Refer to Table 1 for louver positions.

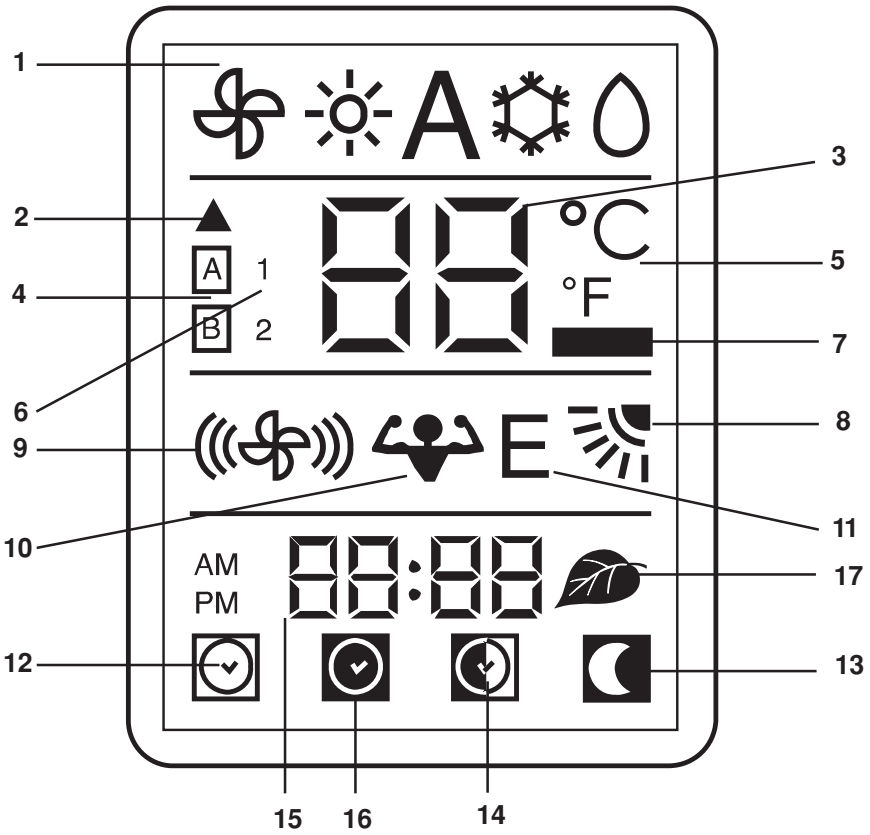

1. Operating mode (from left to right)
   - Fan only
   - Heating (heat pump models only)
   - Automatic (heat pump models only)
   - Cooling
   - Dehumidification
2. Signal transmission symbol
3. Temperature set point selected
4. Address selected
5. Temperature unit of measurement (°C or °F)
6. Unit configuration
7. Low Battery indicator
8. Louver position
9. Fan speed
10. Turbo setting
11. Economical setting
12. ON timer selected
13. Night timer active
14. DAILY timer active (Everyday)
15. ON timer and OFF timer or current time
16. OFF timer selected
17. Ionizer active

Fig. 4 — Remote Control Display Icons

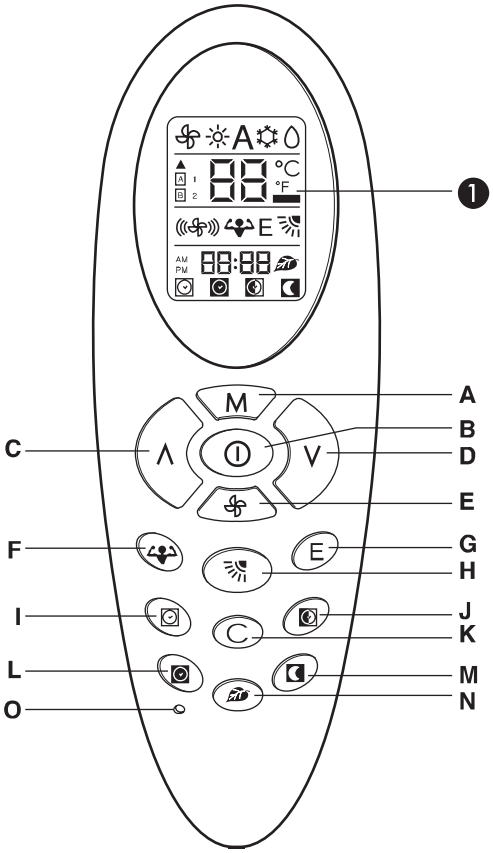

❶ Display readout

A. Mode selection button

B. ON/OFF button

C. Increase temperature button

D. Decrease temperature button

E. Fan speed selection button

F. Turbo setting button

G. Economical setting button

H. Louver control button (Flap)

I. ON timer button

J. DAILY timer button (Everyday)

K. Cancel timer button / Current time button

L. OFF timer button

M. Sleep timer button (night)

N. Ionizer button

O. Reset button

Fig. 5 — Operating Mode Indicators on Remote Control

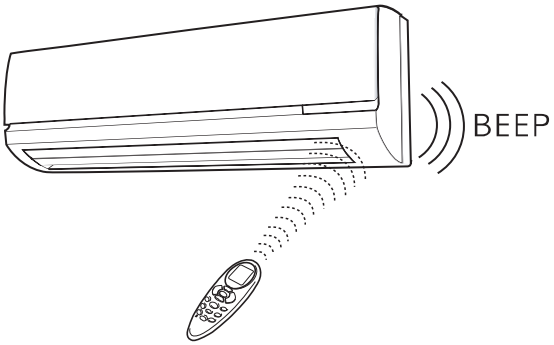

Fig. 6 — Proper Positioning of Remote Control

Table 1 — Louver Positions

SYMBOL ON REMOTE CONTROL	DESCRIPTION
	Louver position will be set automatically. Louver will be set to the preset position according to the operation mode.
	The louver can be set to one of six different airflow directions.
	The louver will continuously swing up and down. The “swing” setting will provide optimal, even air distribution in the room.

Indoor Unit Display (Fig. 7) — The indoor unit display has three LED indicators at the lower right hand portion of the unit. The Blue light is illuminated when the ionizer is active. The Orange light is illuminated during timer mode. The Green light is illuminated during operation.

Emergency Operation — When the remote control is lost or damaged or the batteries are exhausted, the EMER. button can be used to run the unit.

Press the EMER. button once briefly when the system is off.

To stop emergency operation, push the EMER. button again or operate the remote control.

The set conditions of emergency operation are as follows:

- Preset set point: 77 F
- Fan speed: AUTO
- Timer mode: Disabled
- Discharge air direction: Pre-set position based on operation in “Cool” or “Heat” mode.

Pressing the On/Off Button — When the air conditioner is not in operation, the remote control readout will display the time of day only.

Press the On/Off button to start the unit.

The unit will start in the last operating mode.

Press button On/Off to stop the unit.

All indicator lights on the unit will go out, and the remote control will display only the current time.

If the unit does not stop, turn the control on (by pressing the On/Off button) and repeat the operation.

NOTE: If the On/Off button is pressed too soon after a stop, the compressor will not start for 3 to 5 minutes due to the inherent protection against frequent compressor cycling. The unit will only emit an audible beep when the signals are received correctly.

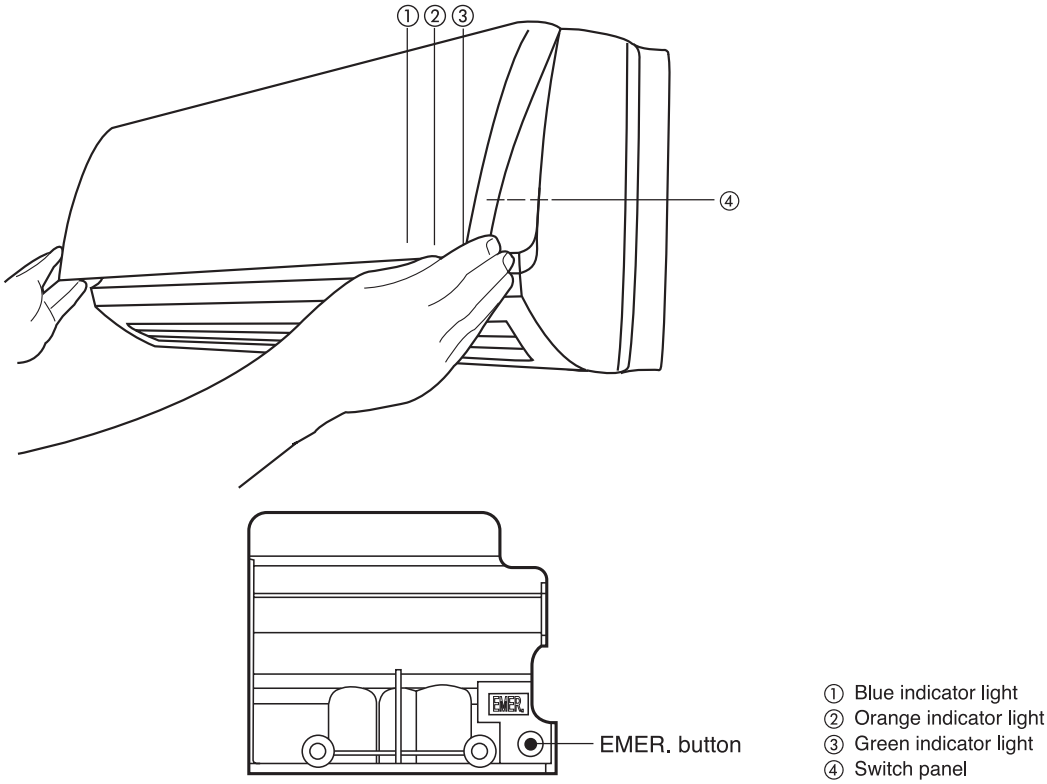

Fig. 7 — Unit Display and Switch Panel

Selecting an Operating Mode — Use the M button to select the unit operating mode.

Repeatedly press the Operating Mode button to select available modes.

The chosen mode is shown as follows, while the unit will acknowledge signal receipt with a beep.

Indicated symbol:

- Fan Only
- Heating
- Automatic
- Cooling
- Dehumidification

Setting the Room Temperature Set Point — Pressing the increase temperature set point ∧ and decrease ∨ buttons will raise or lower the temperature.

The unit will confirm signal receipt with a beep, and the value of the set temperature on the display will change accordingly.

The temperature can be set between 63 F and 90 F at 1 degree intervals.

NOTE: In Cooling mode, if the temperature selected is higher than the room temperature the unit will not start; the same applies for the Heating mode, if the selected temperature is lower than the room temperature.

The remote control can be set to display the temperature in degrees Fahrenheit or degrees Celsius. To change the temperature setting, complete the following steps while the unit is off:

1. Press the decrease set point button and the louver button simultaneously for 5 seconds.
2. The display will show the channel setting (CH).
3. Press the mode M button once to go to the Temperature (tu) screen.
4. Use the increase or decrease set point arrows to change the temperature display setting.
5. Press the louver button to transmit the temperature display setting to configure the remote.

Selecting the Direction of Louver Position — The airflow direction can be adjusted to optimize air distribution.

Press the louver button repeatedly to choose one of the louver positions. See Table 1.

In the Cooling, Dehumidification and Fan Only mode, the louver will swing in the cooling range. In the Heating mode, the louver will swing in the heating range. See Fig. 8.

NOTE: Always use the remote control to adjust the louver position, otherwise abnormal operation may occur. If the louver is manually adjusted out of its range, turn the unit off and then on again.

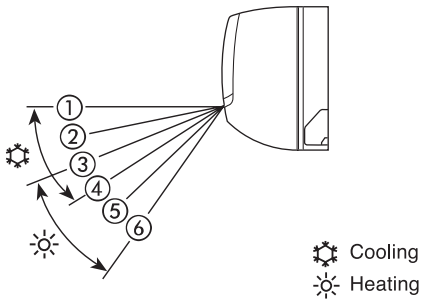

Fig. 8 — Cooling and Heating Louver Position

LEFT AND RIGHT CONTROL — To adjust the direction of the discharge air to the left or right, adjust the vertical guide vane with the handle after opening the louver. See Fig. 9.

NOTE:

- Do not set the louver to position for long periods of time, because this position minimizes air circulation resulting in uneven room temperature.
- Do not adjust the louver manually during SWING operation because it may damage the air swing mechanism.
- For maximum cooling or heating capacity, please louver to position .

Selecting the Fan Speed — The fan speed can be selected by pressing the fan speed button .

SYMBOL	DESCRIPTION
	Low speed.
	Medium speed.
	High speed.
	Automatic (fan will automatically switch to the appropriate speed for optimum comfort).

Using the Turbo Setting — For maximum capacity while in Cooling, Dehumidification and Heating modes, press the Turbo Setting button . On the display, the Turbo Setting icon will appear.

1. Turbo Cooling mode performs the turbo cooling operation until room temperature reaches 63 F or 20 minutes after pressing the Turbo Setting button. While in Turbo Cooling mode, indoor fan speed is high and compressor speed is over-rating speed to obtain maximum cooling capacity.

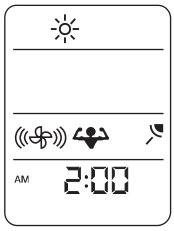

2. Turbo Heating mode performs the turbo heating operation until room temperature reaches 90 F or 20 minutes after pressing the turbo setting button. While in Turbo Heating mode, the indoor fan and compressor operates in high speed in order to obtain maximum heating capacity.

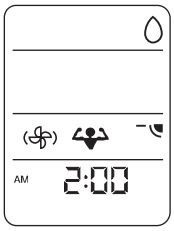

3. Turbo Dehumidification mode performs the dehumidification operation until room temperature is under 63 F or 3 hours after pressing the turbo setting button. While in Turbo Dehumidification mode, indoor fan speed operates in low speed in order to remove humidity more effectively.

During the turbo setting, room temperature and fan speed cannot be changed using the remote controller.

Press , or **E** to cancel turbo setting mode.

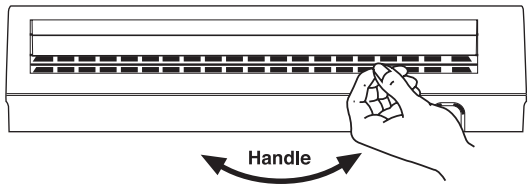

Fig. 9 — Using the Vertical Guide Vane

Using the Economical Setting — For quiet, energy saving operation in Cooling, Heating and Auto modes, press the Economical Setting button **E**. On the display, the Economical Setting icon **E** will appear.

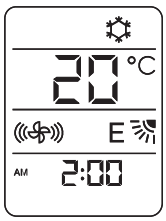

1. Economical Cooling mode:
   The indoor fan and compressor operate at a minimum speed for maximum energy savings.

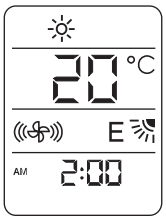

2. Economical Heating mode:
   The indoor fan and compressor operate at a minimum speed for maximum energy savings.

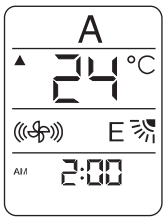

3. Economical Auto mode:
   Unit operates in Economical Cooling mode or Economical Heating mode depending on the room temperature and set point.

During the Economical setting, the room temperature and louver position can be set by using the remote control. Fan speed cannot be changed while in the Economical setting.

Press , or **E** to cancel the economical setting.

Setting the ON Timer

1. ON TIMER button
   Press the , even if the unit is off.
   The relevant icon and time figure will start to flash.
   If 10 seconds have elapsed and no button is pressed, the remote control returns to the previous setting without making any changes.
2. Setting the ON time with .
   When the unit is ON, the only possible selection is the start-up time. The Operating mode and set point remain the same as the current operation.
   To select the start-up time when the unit is off, use .
   First select the hours and confirm by pressing . Then select the minutes using either or .
   To finish setting the time, press again.
3. Choose the unit Operating mode.
   To select the operating mode, use the button. Once the operating mode has been selected, press .
   The icon of the selected mode will stop flashing.
4. Select the desired set point temperature.
   To select the desired temperature, use either or .
   Push to confirm the selection. The set point numbers will stop flashing.

5. Fan speed:
   Choose the fan speed, using . When the selection has been completed, press button for confirmation. The fan speed icon will stop flashing.
6. Louver positioning:
   Use , to select desired louver position. Press for confirmation. Now all icons are fixed on display. To cancel selections made up to this point, push **C**; to cancel all of the selected options once the timer has been set, push and then **C**. The ON Timer settings are now complete.

Setting the Off Timer — Set the Off Timer to select a time for the system to turn off.

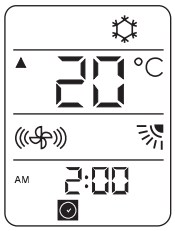

1. Press the Off Timer button.
   The Off timer icon and numbers for a time selection flash.
   NOTE: This function can be set even if the remote control is OFF.
2. Setting the Off time (buttons ∧ and ∨).
   To set the Off time, press either button ∧ or ∨.
   To move from hour to minute, press .
   Press again to confirm Off time setting.

Setting the DAILY Timer — Push the button when the ON or OFF timer is active. The icon will appear on display.

In this way the ON and OFF timer settings will be repeated every day.

To deactivate the daily function, press again.

EXAMPLE 1: Combining the ON, OFF and DAILY timer features.

To start the unit at 5:30 P.M. and stop at 10:30 P.M. for one day only, complete the following steps:

1. Set the ON timer for 5:30 P.M.
2. Set the OFF timer for 10:30 P.M.
3. Select desired operating mode ( ).

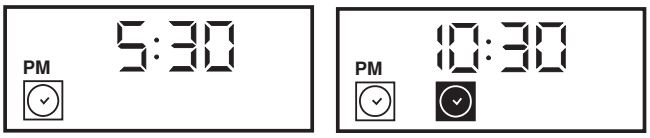

EXAMPLE 2: To stop operation at 10:30 P.M. and start again at 7:30 A.M. with the same operating mode, complete the following steps:

1. Set the OFF timer for 10:30 P.M. while the system is operating.
2. Set the ON timer for 7:30 A.M.

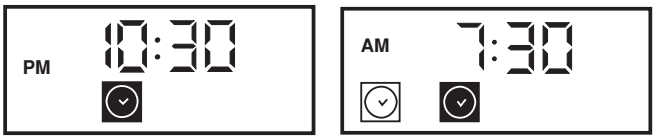

For everyday operation to start at 5:30 P.M. and stop at 10:30 P.M. complete the following steps:

1. Set the ON timer for 5:30 P.M.
2. Set the OFF timer for 10:30 P.M.
3. Press the DAILY timer button .

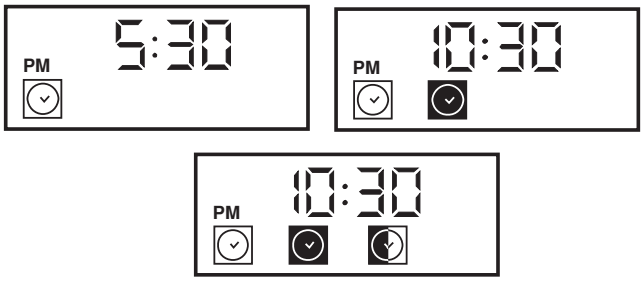

CANCELLING THE ON, OFF AND DAILY TIMER SETTINGS — To cancel the ON or OFF timer setting, press the following buttons in order:

1. Button or ;
2. Button **C**.
   To deactivate the Daily timer function, press .

NOTE: Everyday operation will remain active until one of the two timers (ON or OFF) is active.

Setting the Sleep Timer — Press this button to set the SLEEP timer with the system on. The icon will appear on the display.

This procedure permits setting the remaining unit operating time until the Sleep mode is entered.

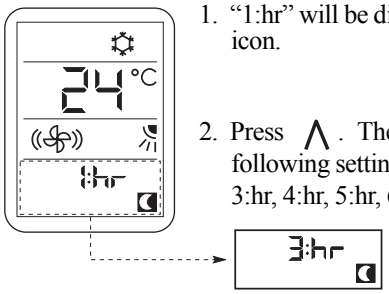

1. "1:hr" will be displayed together with the icon.
2. Press ∧. The display will show the following settings in sequence: 1:hr, 2:hr, 3:hr, 4:hr, 5:hr, 6:hr, 7:hr, 8:hr and 9:hr.
3. Once the remaining operating hours have been selected with either button ∧ or ∨, press the button to confirm.
4. When the SLEEP timer is set, the unit will control the set temperature to avoid overcooling or overheating during operation. The set temperature will change as in Fig. 10.

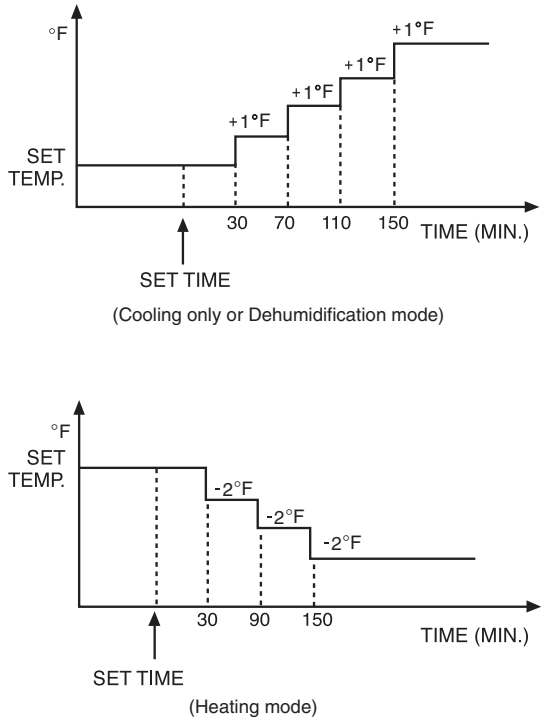

Fig. 10 — Set Temperature Levels

Using the Ionizer Function — The ionizer helps to eliminate odors in the conditioned space.

1. Press to activate the Ionizer function.
2. Press again to turn off Ionizer function.

Remote Control Address Selection — If two indoor units are in the same room, one remote control can be linked to one indoor unit, and the other remote control to the other indoor unit, or both indoor units can be controlled with a single remote control.

For more information, refer to the installation instructions.

Resetting the Remote Control — If the remote control is not functioning properly it can be reset by pressing the reset button with a paper clip or tip of a pen.

Operating Conditions — Temperature ranges suitable for unit operation are as follows.

MODE	INDOOR (°F)	OUTDOOR (°F)
Cool	59-90	59-110
Heat	Max. 81	14- 75
Dehumidification	59-90	59-110

If the unit operates above 59 to 90 F maximum temperature conditions for a long period of time, system diagnostics may modify the system operation to prevent damage to the system.

Time Delay — If unit operation is started after the power is turned off, there will be a 3-minute time delay until the compressor turns on.

When heating operation starts, hot air delivery may be delayed due to a warm-up period.

Minimum Operation Time — In normal operation, there is a minimum operation time of 5 to 7 minutes between the compressor turning on and turning back off.

Heating Features — If the unit starts in Heating mode, there may be a preheating period before the unit is ready to deliver warm air.

Defrost Operation — In heating mode, if the outdoor coil is frosted, the indoor fan and outdoor fan will turn off while system removes the frost on the outdoor coil.

The system will automatically revert to normal operation when frost is removed from the outdoor unit.

Auto Recovery — If the power fails while the unit is operating, the unit memorizes the operating condition, and it will start operation automatically when the power is restored.

Indoor Unit Frost Prevention in Cooling and Dehumidification Mode — If the unit operates at a low ambient temperature, frost may appear on the indoor coil. If the indoor coil temperature is near 32 F, the compressor's speed is reduced or stopped to protect the unit from frost.

CLEANING, MAINTENANCE AND TROUBLESHOOTING

⚠ CAUTION

To avoid the possibility of electric shock, always turn off power to the system before performing any cleaning or maintenance to the system. Turn off the outdoor disconnect switch located near outdoor unit. Be sure to disconnect indoor unit if on a separate switch.

⚠ CAUTION

Operating the system with dirty air filters may damage the indoor unit and could cause reduced cooling performance, intermittent system operation, frost build-up on indoor coil or blown fuses.

Periodic Maintenance — Periodic maintenance is recommended to ensure proper operation of the unit. Recommended maintenance intervals may vary depending on the installation environment, e.g., dusty zones, etc. Refer to Table 2.

⚠ CAUTION

The coil fins are very sharp. Use caution when cleaning the coil fins to prevent unit damage and to avoid personal injury.

Cleaning the Coil — Clean the coil at the beginning of each cooling season, or when necessary. Use a vacuum cleaner or a long-bristle brush to avoid damage to the coil fins.

Air Filters — Remove and clean the air filters once a month.

NOTE: If air filters show signs of excessive wear or are torn, they must be replaced. Contact your local dealer for replacement filters.

1. Open front panel on unit.
2. Pull filters down to remove.
3. Vacuum filters.
4. Clean with warm water.
5. Shake filter to remove excess water and dry thoroughly.
6. Replace filter by sliding filter behind front grille until filter snaps in place.

⚠ CAUTION

When cleaning the front panel, ***do not*** use water hotter than 105 F and do not pour water onto the fan coil.

Do not use abrasive or petroleum based cleaners as they may damage the front panel.

Ionizer — Clean the ionizer with a brush every four months.

⚠ CAUTION

Disconnect the unit from the main power supply prior to cleaning or performing maintenance on the ionizer. Serious personal injury could result.

1. Unscrew and lift the ionizer cover.
2. Brush the needles on the base of the ionizer.
3. Close the cover and tighten the screw.

Indoor Unit Front Panel — To clean the front panel on the indoor unit, wipe the outside with a soft, dry cloth. If necessary, a mild liquid detergent can be applied and wiped off with a dry cloth.

Preparing for a Long Shutdown Period — Clean the filters and reposition them in the unit. Operate the unit in Fan only mode for 12 hours to dry all internal parts.

Turn main power supply off and remove batteries from the remote control.

System Operation Check List — The items outlined in the following list will help to assure proper system operation:

- Be sure unit is connected directly to electrical supply.
- Replace both remote control batteries at the same time when the Low Battery indicator appears.
- Point the remote control toward the unit display panel when transmitting a command.
- Keep doors and windows closed while unit is operating.
- Close air vents in unoccupied rooms to save electricity.
- Contact an authorized service representative if a problem arises that cannot be easily resolved.
- Do not perform cleaning or maintenance activities while unit is on.
- Keep display panel on unit away from direct sunlight and heat as this may interfere with remote control transmissions.
- Do not block air intakes and outlets on the indoor or outdoor units.

Energy Saving Recommendations — The following recommendations will add greater efficiency to the duct-free system:

- Select a comfortable thermostat setting and leave it at chosen setting. Avoid continually raising and lowering the setting.
- Keep unit filter clean. Frequent cleaning may be necessary depending on indoor air quality.
- Use drapes, curtains or shades to keep direct sunlight from heating room on very hot days.
- Do not obstruct front grille air intake on front panel.
- Turn on air conditioning before indoor air becomes too uncomfortable.

Troubleshooting — Refer to Tables 3 and 4 before contacting your local dealer.

Table 2 — Periodic Maintenance

INDOOR UNIT	EVERY MONTH	EVERY 4 MONTHS	EVERY YEAR
Clean Air Filter*	●		
Clean Drain Pipe		●	
Change Remote Control Batteries			●
Clean Ionizer		●	
OUTDOOR UNIT	**EVERY MONTH**	**EVERY 4 MONTHS**	**EVERY YEAR**
Clean Outdoor Coil from Outside		●	
Clean Outdoor Coil from Inside†			●
Blow Air Over Electric Parts†			●
Check Electric Connection Tightening†			●
Clean Fan Wheel†			●
Check Fan Tightening†			●
Clean Drain Pans†			●

*Increase frequency in dusty zones.
†Maintenance to be carried out by qualified service personnel. Refer to the Installation Manual.

Table 3 — Troubleshooting

PROBLEM	POSSIBLE CAUSE	SOLUTION
Unit/System Does Not Work	• The circuit breaker has tripped or a fuse has blown. • Power failure. • Green or Orange LED is flashing on and off, which could indicate an indoor or outdoor unit fault. • Voltage is too low.	• Reset the circuit breaker or replace the fuse with the specified replacement fuse. • Restart operation when the power is restored. • Call your service representative. • Call your service representative.
Cooling is Not Working Properly	• The filter is blocked with dust. • Temperature is not set properly. • A window or door is open. • The outdoor unit is obstructed. • The fan speed is too low. • The operation mode is in Fan or Auto instead of Cool.	• Clean the air filter. • Check the temperature and reset if necessary. • Close the window or door. • Remove the obstruction. • Change the fan speed selection. • Change the operating mode to Cool or reset the unit.
Heating is Not Working Properly	• The filter is blocked with dust. • Temperature is set too low. • A window or door is open. • The outdoor unit is obstructed.	• Clean the air filter. • Check the temperature and reset if necessary. • Close the window or door. • Remove the obstruction.
Unit Stops During Operation	• The Off timer is not operating correctly. • Green or Orange LED is flashing on and off, which could indicate an indoor or outdoor unit fault.	• Restart the operating mode. • Call your service representative.

LEGEND

LED — Light Emitting Diode

Table 4 — Unit Protection Devices

TYPE OF PROTECTION	EFFECT OF PROTECTION	OPERATING MODE
Indoor Coil High Temperature Protection	Compressor speed slow down or off	Heating and Auto mode at high outdoor temperatures
Indoor Coil Freeze Up Protection	Compressor speed slow down or off	Cooling, Dehumidification and Auto mode at low outdoor temperatures
Discharge Gas High Temperature Protection	Compressor speed slow down or off	Cooling, Heating, Dehumidification and Auto mode outdoor temperatures
Frequent Compressor Cycling	Compressor time delay	All

⚠ CAUTION

During heating operation the unit may defrost to remove ice that might collect on the outdoor unit. During defrost, the indoor fan will automatically stop, the louver will be fixed at a horizontal position and can not be changed until the defrost cycle is completed. Forcing the louver to change its position during defrost could result in equipment damage.

Fill out the following to save time on any future service calls.

Dealer's Name _____

Address _____

Telephone _____ **Purchase Date** _____

Indoor Model # _____ **Outdoor Model #** _____

Indoor Serial # _____ **Outdoor Serial #** _____

Copyright 2006 Carrier Corporation