AquaEdge™
19XR,XRV
Single-Stage
Semi-Hermetic Centrifugal Liquid Chillers
with PIC II Controls and HFC-134a
50/60 Hz

Installation Instructions

SAFETY CONSIDERATIONS

Centrifugal liquid chillers are designed to provide safe and reliable service when operated within design specifications. When operating this equipment, use good judgment and safety precautions to avoid damage to equipment and property or injury to personnel.

Be sure you understand and follow the procedures and safety precautions contained in the machine instructions, as well as those listed in this guide.

⚠ DANGER

Failure to follow these procedures will result in severe personal injury or death.

DO NOT VENT refrigerant relief devices within a building. Outlet from rupture disc or relief valve must be vented outdoors in accordance with the latest edition of ANSI/ASHRAE 15 (American National Standards Institute/American Society of Heating, Refrigerating and Air-Conditioning Engineers) (Safety Code for Mechanical Refrigeration). The accumulation of refrigerant in an enclosed space can displace oxygen and cause asphyxiation.

PROVIDE adequate ventilation in accordance with ANSI/ASHRAE 15, especially for enclosed and low overhead spaces. Inhalation of high concentrations of vapor is harmful and may cause heart irregularities, unconsciousness, or death. Intentional misuse can be fatal. Vapor is heavier than air and reduces the amount of oxygen available for breathing. Product causes eye and skin irritation. Decomposition products are hazardous.

DO NOT USE OXYGEN to purge lines or to pressurize a machine for any purpose. Oxygen gas reacts violently with oil, grease, and other common substances.

DO NOT USE air to leak test. Use only refrigerant or dry nitrogen.

NEVER EXCEED specified test pressures. VERIFY the allowable test pressure by checking the instruction literature and the design pressures on the equipment nameplate.

DO NOT VALVE OFF any safety device.

BE SURE that all pressure relief devices are properly installed and functioning before operating any machine.

RISK OF INJURY OR DEATH by electrocution. High voltage is present on motor leads even though the motor is not running when a solid state or inside-delta mechanical starter is used. Open the power supply disconnect before touching motor leads or terminals.

⚠ WARNING

Failure to follow these procedures may result in personal injury or death.

DO NOT USE TORCH to remove any component. System contains oil and refrigerant under pressure.

To remove a component, wear protective gloves and goggles and proceed as follows:

a. Shut off electrical power to unit.
b. Recover refrigerant to relieve all pressure from system using both high-pressure and low pressure ports.
c. Traces of vapor should be displaced with nitrogen and the work area should be well ventilated. Refrigerant in contact with an open flame produces toxic gases.
d. Cut component connection tubing with tubing cutter and remove component from unit. Use a pan to catch any oil that may come out of the lines and as a gage for how much oil to add to the system.
e. Carefully unsweat remaining tubing stubs when necessary. Oil can ignite when exposed to torch flame.

DO NOT USE eyebolts or eyebolt holes to rig machine sections or the entire assembly.

DO NOT work on high-voltage equipment unless you are a qualified electrician.

DO NOT WORK ON electrical components, including control panels, switches, starters, or oil heater until you are sure ALL POWER IS OFF and no residual voltage can leak from capacitors or solid-state components.

LOCK OPEN AND TAG electrical circuits during servicing. IF WORK IS INTERRUPTED, confirm that all circuits are de-energized before resuming work.

AVOID SPILLING liquid refrigerant on skin or getting it into the eyes. USE SAFETY GOGGLES. Wash any spills from the skin with soap and water. If liquid refrigerant enters the eyes, IMMEDIATELY FLUSH EYES with water and consult a physician.

NEVER APPLY an open flame or live steam to a refrigerant cylinder. Dangerous over pressure can result. When it is necessary to heat refrigerant, use only warm (110 F [43 C]) water.

DO NOT REUSE disposable (nonreturnable) cylinders or attempt to refill them. It is DANGEROUS AND ILLEGAL. When cylinder is emptied, evacuate remaining gas pressure, loosen the collar, and unscrew and discard the valve stem. DO NOT INCINERATE.

CHECK THE REFRIGERANT TYPE before adding refrigerant to the machine. The introduction of the wrong refrigerant can cause machine damage or malfunction.

(Warnings continued on next page.)

Manufacturer reserves the right to discontinue, or change at any time, specifications or designs without notice and without incurring obligations.

⚠ WARNING

Operation of this equipment with refrigerants other than those cited herein should comply with ANSI/ASHRAE 15 (latest edition). Contact Carrier for further information on use of this machine with other refrigerants.

DO NOT ATTEMPT TO REMOVE fittings, covers, etc., while machine is under pressure or while machine is running. Be sure pressure is at 0 psig (0 kPa) before breaking any refrigerant connection.

CAREFULLY INSPECT all relief valves, rupture discs, and other relief devices AT LEAST ONCE A YEAR. If machine operates in a corrosive atmosphere, inspect the devices at more frequent intervals.

DO NOT ATTEMPT TO REPAIR OR RECONDITION any relief valve when corrosion or build-up of foreign material (rust, dirt, scale, etc.) is found within the valve body or mechanism. Replace the valve.

DO NOT install relief devices in series or backwards.

USE CARE when working near or in line with a compressed spring. Sudden release of the spring can cause it and objects in its path to act as projectiles.

⚠ CAUTION

Failure to follow these procedures may result in personal injury or damage to equipment.

DO NOT STEP on refrigerant lines. Broken lines can whip about and release refrigerant, causing personal injury.

DO NOT climb over a machine. Use platform, catwalk, or staging. Follow safe practices when using ladders.

USE MECHANICAL EQUIPMENT (crane, hoist, etc.) to lift or move inspection covers or other heavy components. Even if components are light, use mechanical equipment when there is a risk of slipping or losing your balance.

BE AWARE that certain automatic start arrangements CAN ENGAGE THE STARTER, TOWER FAN, OR PUMPS. Open the disconnect *ahead of* the starter, tower fan, and pumps. Shut off the machine or pump before servicing equipment.

USE only repaired or replacement parts that meet the code requirements of the original equipment.

DO NOT VENT OR DRAIN waterboxes containing industrial brines, liquid, gases, or semisolids without the permission of your process control group.

DO NOT LOOSEN waterbox cover bolts until the waterbox has been completely drained.

DOUBLE-CHECK that coupling nut wrenches, dial indicators, or other items have been removed before rotating any shafts.

DO NOT LOOSEN a packing gland nut before checking that the nut has a positive thread engagement.

PERIODICALLY INSPECT all valves, fittings, and piping for corrosion, rust, leaks, or damage.

PROVIDE A DRAIN connection in the vent line near each pressure relief device to prevent a build-up of condensate or rain water.

DO NOT re-use compressor oil or any oil that has been exposed to the atmosphere. Dispose of oil per local codes and regulations.

DO NOT leave refrigerant system open to air any longer than the actual time required to service the equipment. Seal circuits being serviced and charge with dry nitrogen to prevent oil contamination when timely repairs cannot be completed.

CONTENTS

Page

SAFETY CONSIDERATIONS 1,2
INTRODUCTION 2
General 2
Job Data 2
INSTALLATION 2-77
Step 1 — Receive the Machine 2
- INSPECT SHIPMENT
- IDENTIFY MACHINE
- INSTALLATION REQUIREMENTS
- PROVIDE MACHINE PROTECTION

Step 2 — Rig the Machine 3
- RIG MACHINE ASSEMBLY
- RIG MACHINE COMPONENTS

Step 3 — Install Machine Supports 32
- INSTALL STANDARD ISOLATION
- INSTALL ACCESSORY ISOLATION
- INSTALL SPRING ISOLATION

Step 4 — Connect Piping 34
- INSTALL WATER PIPING TO HEAT EXCHANGERS
- INSTALL VENT PIPING TO RELIEF VALVES
- INSTALL CIRCUIT BREAKER HANDLE EXTENSION

Step 5 — Make Electrical Connections 43
- CONNECT CONTROL INPUTS
- CONNECT CONTROL OUTPUTS
- CONNECT STARTER
- CARRIER COMFORT NETWORK INTERFACE
- OPTIONAL UPC OPEN CONTROLLER WIRING

Step 6 — Install Field Insulation 77
INSTALLATION START-UP REQUEST CHECKLIST CL-1, CL-2

INTRODUCTION

General — The 19XR, 19XRV machine is factory assembled, wired, and leak tested. Installation (not by Carrier) consists primarily of establishing water and electrical services to the machine. The rigging, installation, field wiring, field piping, and insulation of waterbox covers are the responsibility of the contractor and/or customer. Carrier has no installation responsibilities for the equipment.

Job Data

Necessary information consists of:
- job contract or specifications
- machine location prints
- rigging information
- piping prints and details
- field wiring drawings
- starter manufacturer's installation details
- Carrier certified print

INSTALLATION

Step 1 — Receive the Machine

INSPECT SHIPMENT

⚠ CAUTION

Do not open any valves or loosen any connections. The 19XR, 19XRV machine may be shipped with a nitrogen holding charge in both modules. Damage to machine may result.

1. Inspect for shipping damage while machine is still on shipping conveyance. If machine appears to be damaged

or has been torn loose from its anchorage, have it examined by transportation inspectors before removal. Forward claim papers directly to transportation company. *Manufacturer is not responsible for any damage incurred in transit.*

2. Check all items against shipping list. Immediately notify the nearest Carrier representative if any item is missing.
3. To prevent loss or damage, leave all parts in original packages until beginning installation. All openings are closed with covers or plugs to prevent dirt and debris from entering machine components during shipping. A full operating oil charge is placed in the oil sump before shipment.

IDENTIFY MACHINE — The machine model number, serial number, and heat exchanger sizes are stamped on machine identification nameplate (Fig. 1-3). Check this information against shipping papers and job data.

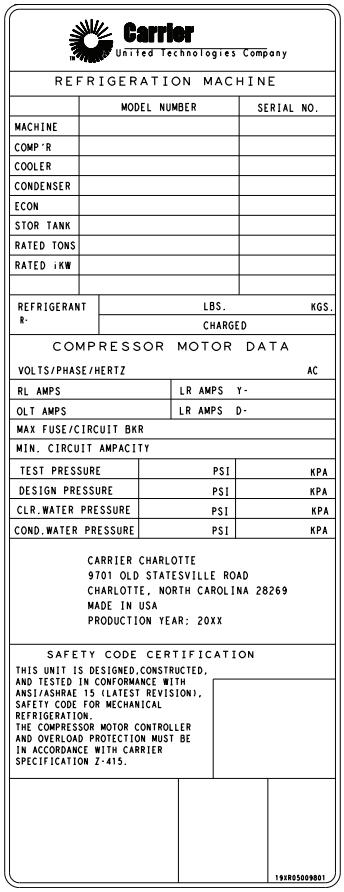

Fig. 1 — 19XR Refrigeration Machine Nameplate

INSTALLATION REQUIREMENTS — Prior to starting the chiller's electrical installation, certain requirements should be checked. Input power wire sizes, branch circuit protection, and control wiring are all areas that need to be evaluated.

Determine Wire Size Requirements — Wire size should be determined based on the size of the conduit openings, and applicable local, national, and international codes (e.g., NEC [National Electric Code]/CEC [California Energy Commission] regulations). General recommendations are included in the Carrier field wiring drawings.

Conduit Entry Size — It is important to determine the size of the conduit openings in the enclosure power entry plate so that the wire planned for a specific entry point will fit through the opening. Do NOT punch holes or drill into the top surface of starter or drive if knockouts are provided on the side of the enclosure and not the top of the enclosure.

Recommended Control and Signal Wire Sizes — The recommended minimum size wire to connect I/O signals to the control terminal blocks is 18 AWG (American Wire Gage). Recommended terminal tightening torque is 7 to 9 in.-lb (0.79 to 1.02 N-m).

Recommended Airflow Clearances — Be sure there is adequate clearance for air circulation around the enclosure. A 6-in. (152.4 mm) minimum clearance is required wherever vents are located in the starter or drive enclosure.

Service Clearances — Verify that there are adequate service clearances as identified in Fig. 4.

Verify Adequate Power Supply — It is important to verify that the building power will meet the input power requirements of the Machine Electrical Data nameplate input power rating. Be sure the input power to the chiller corresponds to the chiller's nameplate voltage, current, and frequency.

PROVIDE MACHINE PROTECTION — Store machine and VFD (variable frequency drive) indoors, protected from construction dirt and moisture. Inspect under shipping tarps, bags, or crates to be sure water has not collected during transit. Keep protective shipping covers in place until machine is ready for installation.

⚠ CAUTION

Freezing water can damage equipment. If machine can be or possibly has been exposed to freezing temperatures after water circuits have been installed, open waterbox drains and remove all water from cooler and condenser. Leave drains open until system is filled.

It is important to properly plan before installing a 19XR or 19XRV unit to ensure that the environment and operating conditions are satisfactory and the machine is protected. The installation must comply with all requirements in the certified prints.

Operating Environment — Chiller should be installed in an indoor environment where the ambient temperature is between 40 to 104 F (4 to 40 C) with a relative humidity (non-condensing) of 95% or less. To ensure that electrical components operate properly, do not locate the chiller in an area exposed to dust, dirt, corrosive fumes, or excessive heat and humidity.

Step 2 — Rig the Machine — The 19XR,XRV machine can be rigged as an entire assembly. It also has flanged connections that allow the compressor, cooler, and condenser sections to be separated and rigged individually.

RIG MACHINE ASSEMBLY — See rigging instructions on label attached to machine. Refer to rigging guide (Fig. 5-7), physical data in Fig. 4, and Tables 1-8B. *Lift machine only from the points indicated in rigging guide.* Each lifting cable or chain must be capable of supporting the entire weight of the machine.

Contractors are not authorized to disassemble any part of the chiller without Carrier's supervision. Any request otherwise must be in writing from the Carrier Service Manager.

NOTE: Carrier suggests that a structural engineer be consulted if transmission of vibrations from mechanical equipment is of concern.

⚠ WARNING

Lifting chiller module from points other than those specified may result in serious damage to the machine or personal injury. Rigging equipment and procedures must be adequate for maximum chiller module weight. See Fig. 4-6 for maximum chiller module weights.

19XR– 52 51 4 7 3 DG H 64 –

Description
19XR– — High Efficiency Semi-Hermetic Centrifugal Liquid Chiller
19XRV — High Efficiency Semi-Hermetic Centrifugal Liquid Chiller with Unit-Mounted VFD

Cooler Size*
10-12 (Frame 1 XR)
15-17 (Frame 1 XR)
20-22 (Frame 2 XR)
30-32 (Frame 3 XR)
35-37 (Frame 3 XR)
40-42 (Frame 4 XR)
45-47 (Frame 4 XR)
50-54 (Frame 5 XR)
5A-5C (Frame 5 XR)
55-59 (Frame 5 XR)
5F-5H (Frame 5 XR)
5K-5R (Frame 5 XR)†
5T-5Z (Frame 5 XR)†
60-64 (Frame 6 XR)
6K-6R (Frame 6 XR)†
65-69 (Frame 6 XR)
6T-6Z (Frame 6 XR)†
70-74 (Frame 7 XR)
7K-7R (Frame 7 XR)†
75-79 (Frame 7 XR)
7T-7Z (Frame 7 XR)†
80-84 (Frame 8 XR)
8K-8R (Frame 8 XR)†
85-89 (Frame 8 XR)
8T-8Z (Frame 8 XR)†

Condenser Size*
10-12 (Frame 1 XR)
15-17 (Frame 1 XR)
20-22 (Frame 2 XR)
30-32 (Frame 3 XR)
35-37 (Frame 3 XR)
40-42 (Frame 4 XR)
45-47 (Frame 4 XR)
50-54 (Frame 5 XR)
55-59 (Frame 5 XR)
60-64 (Frame 6 XR)
65-69 (Frame 6 XR)
70-74 (Frame 7 XR)
75-79 (Frame 7 XR)
80-84 (Frame 8 XR)
85-89 (Frame 8 XR)

Special Order Indicator
– — Standard
S — Special Order

Motor Voltage Code

Code	Volts-Phase-Hertz
60	200-3-60
61	230-3-60
62	380-3-60
63	416-3-60
64	460-3-60
65	575-3-60
66	2400-3-60
67	3300-3-60
68	4160-3-60
69	6900-3-60
50	230-3-50
52	400-3-50
53	3000-3-50
54	3300-3-50
55	6300-3-50
5A	10000-3-50
5B	11000-3-50
6A	11000-3-60
6B	10000-3-60
6C	13800-3-60

Motor Efficiency Code
Compressor Frame 2, 3, 4, 5
H — High Efficiency
S — Standard Efficiency

Motor Code**

Impeller Diameter

Impeller Shroud

Compressor Frame
2, 3, 4, 5 — Single-Stage

* Refer to 19XR, 19XRV Computer Selection Program for details on these sizes.
† Frame sizes with K-R and T-Z are with 1 in. OD evaporator tubing.
**Refer to the 19XR,XRV Computer Selection Program for motor code details.

Fig. 2 — Model Number Identification

FRONT VIEW

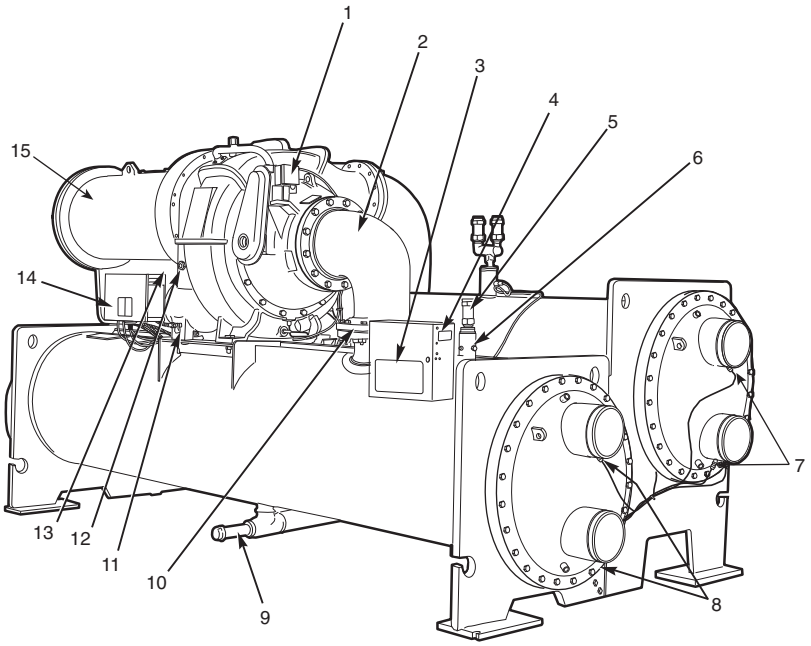

LEGEND

1 — Guide Vane Actuator
2 — Suction Elbow
3 — International Chiller Visual Control (ICVC)
4 — Chiller Identification Nameplate
5 — Cooler Auto Reset Relief Valves
6 — Cooler Pressure Transducer
7 — Condenser In/Out Temperature Thermistors
8 — Cooler In/Out Temperature Thermistors
9 — Refrigerant Storage Tank Connection Valve
10 — Typical Flange Connection
11 — Oil Drain Valve
12 — Oil Level Sight Glasses
13 — Refrigerant Oil Cooler (Hidden)
14 — Auxiliary Power Panel
15 — Motor Housing

REAR VIEW

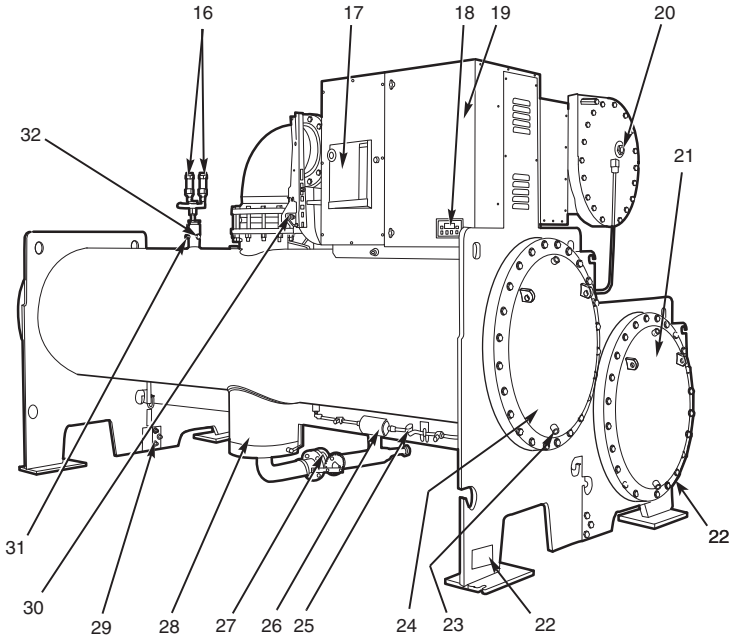

LEGEND

16 — Condenser Auto. Reset Relief Valves
17 — Motor Circuit Breaker
18 — Solid-State Starter Control Display
19 — Unit-Mounted Starter or VFD (Optional) Solid-State Starter Shown
20 — Motor Sight Glass
21 — Cooler Return-End Waterbox Cover
22 — ASME Nameplate (One Hidden)
23 — Typical Waterbox Drain Port
24 — Condenser Return-End Waterbox Cover
25 — Refrigerant Moisture/Flow Indicator
26 — Refrigerant Filter/Drier
27 — Liquid Line Isolation Valve (Optional)
28 — Liquid Float Valve Chamber
29 — Vessel Take-Apart Connector
30 — Discharge Isolation Valve (Optional)
31 — Condenser Pressure Transducer
32 — Refrigerant Charging Valve/Pumpout Connection

Fig. 3 — Typical 19XR Single-Stage Compressor Components

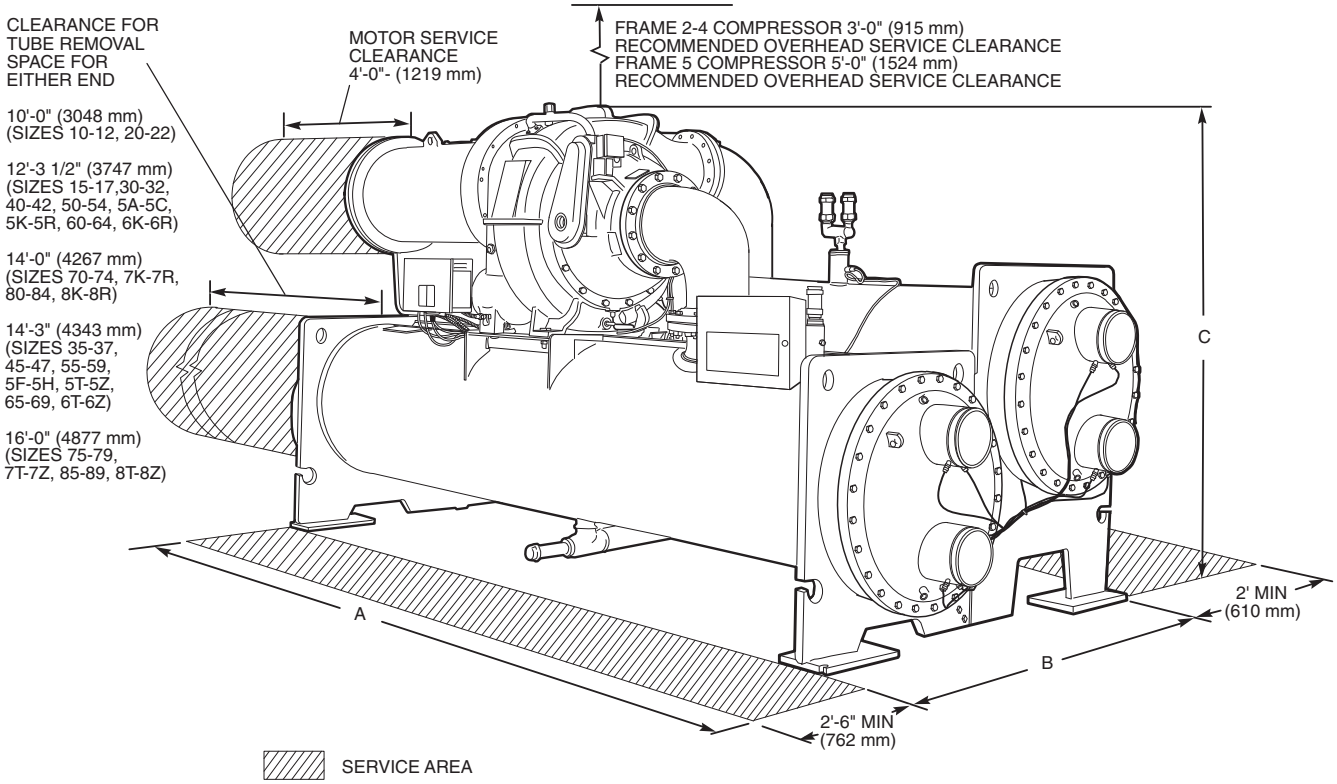

Fig. 4 — 19XR Dimensions (Refer to Tables 1 Through 3)

Table 1 — 19XR Dimensions (Nozzle-In-Head Waterbox)

HEAT EXCHANGER SIZE	A (Length, with Nozzle-in-Head Waterbox)						19XR B (Width)		19XR C (Height)		19XRV B (Width)		19XRV C (Height)
	1-Pass		2-Pass*		3-Pass								
	ft-in.	mm	ft-in.	mm	ft-in.	mm	ft-in.	mm	ft-in.	mm	ft-in.	mm	
10 to 12	11-11	3632	11-4	3464	11-11	3632	5- 2 7/8	1597	6- 1 1/4	1861	5-2 7/8	1597	
15 to 17	14- 2 1/2	4331	13- 7 1/2	4163	14- 2 1/2	4331	5- 2 7/8	1597	6- 1 1/4	1861	5-2 7/8	1597	
20 to 22	12- 0 1/2	3670	11- 5 1/8	3483	12- 0 1/2	3670	5- 6 7/16	1688	6- 3 1/4	1911	5-6 7/16	1688	
30 to 32†	14- 4	4369	13- 8 5/8	4182	14- 4	4369	5- 7 3/16	1707	6- 9 5/8	2073	5-6 7/16	1688	
30 to 32**	14- 4	4369	13- 8 5/8	4182	14- 4	4369	5- 7 3/16	1707	6- 9 5/8	2073	5-6 1/8	1680	
35 to 37†	16- 0 1/2	4889	15- 5 1/8	4703	16- 0 1/2	4889	5- 7 3/16	1707	6- 9 5/8	2073	5-6 7/16	1688	
35 to 37**	16- 0 1/2	4889	15- 5 1/8	4703	16- 0 1/2	4889	5- 7 3/16	1707	6- 9 5/8	2073	5-6 1/8	1680	
40 to 42	14- 10	4521	14- 3 5/8	4360	14- 6 3/4	4439	6- 3 1/8	1908	7- 0 3/4	2153	6- 2	1880	
45 to 47	16- 6 1/2	5042	16- 0 1/8	4880	16- 3 1/4	4959	6- 3 1/8	1908	7- 0 3/4	2153	6- 2	1880	
50 to 52**	14-11	4546	14- 5	4395	14- 7 1/4	4451	6- 8 7/8	2054	7- 2 3/8	2194	6- 6 1/2	1994	See Note 7
50 to 54, 5K to 5R††	14-11	4546	14- 5	4395	14- 7 1/4	4451	6- 8 7/8	2054	7- 2 3/8	2194	6- 7 7/8	2029	
5A to 5C	14-11	4546	14- 5	4395	14- 7 1/4	4451	6- 8 7/8	2054	7- 2 3/8	2194	6- 8 7/8	2054	
55 to 57**	16- 7 1/2	5067	16- 1 1/2	4915	16- 3 3/4	4972	6- 8 7/8	2054	7- 2 3/8	2194	6- 6 1/2	1994	
55 to 59, 5T to 5Z††	16- 7 1/2	5067	16- 1 1/2	4915	16- 3 3/4	4972	6- 8 7/8	2054	7- 2 3/8	2194	6- 7 7/8	2029	
5F to 5H	16- 7 1/2	5067	16- 1 1/2	4915	16- 3 3/4	4972	6- 8 7/8	2054	7- 2 3/8	2194	6 - 8 7/8	2054	
60 to 64, 6K to 6R	15- 0	4572	14- 5 3/4	4413	14- 7 3/4	4464	6- 0 5/8	2124	7- 4 3/8	2245	6- 10 5/8	2124	
65 to 69, 6T to 6Z	16- 8 1/2	5093	16- 2 1/4	4934	16- 4 1/4	4985	6- 0 5/8	2124	7- 4 3/8	2245	6- 10 5/8	2124	
70 to 74, 7K to 7R††	17- 1 1/2	5219	16-11 1/2	5169	16-10	5131	7-11 1/2	2426	9- 9 1/2	2972	9- 1 3/8	2778	
70 to 74, 7K to 7R***	17- 1 1/2	5219	16-11 1/2	5169	16-10	5131	7-11 1/2	2426	9- 9 1/2	2972	9- 3 5/8	2835	
75 to 79, 7T to 7Z	19- 1 1/2	5829	18-11 1/2	5779	18-10	5740	7-11 1/2	2426	9- 9 1/2	2972	9- 3 5/8	2835	
80 to 84, 8K to 8R	17- 4 1/2	5296	17- 1	5207	16- 10 1/2	5143	8-10 3/4	2711	9- 11 1/4	3029	10- 0 9/16	3063	
85 to 89, 8T to 8Z	19- 4 1/2	5905	19- 1	5817	18- 10 1/2	5753	8-10 3/4	2711	9- 11 1/4	3029	10- 0 9/16	3063	

*Assumes both cooler and condenser nozzles on same end of chiller.
†Compressor frame size 2.
**Compressor frame size 3.
††Compressor frame size 4.
***Compressor frame size 5.

TABLE 1 NOTES:

1. Service access should be provided per American Society of Heating, Refrigerating, and Air-Conditioning Engineers (ASHRAE) 15, latest edition, National Fire Protection Association (NFPA) 70, and local safety code.
2. Allow at least 3 ft (915 mm) overhead clearance for service rigging for frame 2-4 compressor. Overhead clearance for service rigging frame 5 compressor should be 5 ft (1524 mm).
3. Dimensions are approximate. Certified drawings available upon request.
4. Marine waterboxes may add 6 in. to the width of the machine. See certified drawings for details.
5. 'A' length dimensions shown are for standard 150 psig design and Victaulic connections. The 300 psig design and/or flanges will add length. See certified drawings.
6. Not all waterbox/pass combinations are available with unit-mounted VFD. Check selection program and Drawing Manager for availability.
7. 19XRV heights can vary depending on the configuration. Check 19XRV certified drawings for height information.

Table 2 — 19XR Nozzle Size

FRAME SIZE	NOZZLE SIZE (in.) (Nominal Pipe Size)					
	Cooler			Condenser		
	1-Pass	2-Pass	3-Pass	1-Pass	2-Pass	3-Pass
1	8	6	6	8	6	6
2	10	8	6	10	8	6
3	10	8	6	10	8	6
4	10	8	6	10	8	6
5	10	8	6	10	10	8
6	10	10	8	10	10	8
7	14	12	10	14	12	12
8	14	14	12	14	14	12

Table 3 — 19XR Dimensions (Marine Waterbox)

HEAT EXCHANGER SIZE	A (Length, Marine Waterbox)				19XR B WIDTH		19XRV B WIDTH		19XR,XRV C HEIGHT
	2-Pass*		1 or 3-Pass†						
	ft-in.	mm	ft-in.	mm	ft-in.	mm	ft-in.	mm	
10 to 12	NA	NA	NA	NA	NA	NA	NA	NA	See Note 6
15 to 17	NA	NA	NA	NA	NA	NA	NA	NA	
20 to 22	12- 5 1/2	3797	14- 1 1/4	4299	6- 1 1/16	1856	6- 1 1/16	1856	
30 to 32	14- 9	4496	16- 4 3/4	4997	6- 1 1/16	1856	6- 1 1/16	1856	
35 to 37	16- 5 1/2	5017	18- 1 1/4	5518	6- 1 1/16	1856	6- 1 1/16	1856	
40 to 42	15- 2 3/4	4642	16- 8 1/4	5086	6- 3 1/4	1911	6- 3 1/4	1911	
45 to 47	16-11 1/4	5163	18- 4 3/4	5607	6- 3 1/4	1911	6- 3 1/4	1911	
50 to 54, 5K to 5R	15- 3 1/2	4661	16- 8 1/2	5093	6- 8 7/8	2054	6- 8 7/8	2054	
5A to 5C	15- 3 1/2	4661	16- 8 1/2	5093	6- 8 7/8	2054	6- 8 7/8	2054	
55 to 59, 5T to 5Z	17- 0	5182	18- 5	5613	6- 8 7/8	2054	6- 8 7/8	2054	
5F to 5H	17- 0	5182	18- 5	5613	6- 8 7/8	2054	6- 8 7/8	2054	
60 to 64, 6K to 6R	15- 4 1/8	4677	16- 8 3/4	5099	6-11 3/4	2127	6- 11 3/4	2127	
65 to 69, 6T to 6Z	17- 0 5/8	5197	18- 5 1/4	5620	6-11 3/4	2127	6- 11 3/4	2127	
70 to 74, 7K to 7R	18- 3 5/8	5579	19- 9 3/4	6039	8- 8 1/8	2645	9- 6 3/8	2905	
75 to 79, 7T to 7Z	20- 3 5/8	6188	21- 9 3/4	6649	8- 8 1/8	2645	9- 6 3/8	2905	
80 to 84, 8K to 8R	18- 4	5583	19-10 1/2	6058	9- 5 5/8	2886	10- 5	3175	
85 to 87, 8T to 8Z	20- 4	6198	21-10 1/2	6668	9- 5 5/8	2886	10- 5	3175	

*Assumes both cooler and condenser nozzles on same end of chiller.
†1 or 3-pass length applies if cooler is a 1 or 3-pass design.
NOTES:

1. Service access should be provided per American Society of Heating, Refrigerating, and Air-Conditioning Engineers (ASHRAE) 15, latest edition, National Fire Protection Association (NFPA) 70, and local safety code.
2. Allow at least 3 ft (915 mm) overhead clearance for service rigging for frame 2-4 compressor. Overhead clearance for service rigging frame 5 compressor should be 5 ft (1524 mm).
3. Dimensions are approximate. Certified drawings available upon request.
4. Marine waterboxes may add 6 in., to the width of the machine. See certified drawings for details.
5. 'A' length dimensions shown are for standard 150 psig design and Victaulic connections. The 300 psig design and/or flanges will add length. See certified drawings.
6. 19XR,XRV height can vary depending on the configuration. Check 19XR, XRV certified drawings for height information.
7. Not all waterbox/pass combinations are available with unit-mounted VFD (variable frequency drive). Check selection program for availability.

COMP FRAME SIZE	HEAT EXCH SIZE	MAXIMUM MACHINE WEIGHT				VESSEL LENGTH		DIM. "A"		DIM. "B"		DIM. "C"		CHAIN LENGTH					
		LF1 VFD or Unit-Mounted Starter		LF2, Std Tier, or 575-v VFD										"D"		"E"		"F"	
		lb	kg	lb	kg	ft	mm	ft-in.	mm	ft-in.	mm	ft-in.	mm	ft-in.	mm	ft-in.	mm	ft-in.	mm
2	10-12	18,590	8432	—	—	10	3048	4- 7	1397	2-6	762	2-3	686	12-7	3835	13-0	3962	13-0	3962
	15-17	19,140	8682	—	—	12	3658	5- 9	1753	2-6	762	2-3	686	13-6	4115	13-2	4013	13-3	4039
	20-22	19,610	8895	22,910	10392	10	3048	4- 7	1397	2-4	711	3-1	940	12-7	3835	13-0	3962	13-0	3962
	30-32	21,210	9620	24,510	11118	12	3658	5- 9	1753	2-6	762	3-6	1067	13-6	4115	13-2	4013	13-3	4039
	35-37	22,720	10306	26,020	11802	14	4267	7- 4	2235	2-6	762	3-6	1067	14-2	4318	13-4	4064	13-4	4064
3	30-32	21,210	9620	24,510	11118	12	3658	5- 9	1753	2-6	762	3-6	1067	13-6	4115	13-2	4013	13-3	4039
	35-37	22,720	10306	26,020	11802	14	4267	7- 4	2235	2-6	762	3-6	1067	14-2	4318	13-4	4064	13-4	4064
	40-42	29,930	13576	33,230	15073	12	3658	5- 9	1753	2-7	787	3-2	965	12-8	3861	12-8	3861	13-4	4064
	45-47	32,040	14533	35,340	16030	14	4267	6-10	2083	2-7	787	3-2	965	13-1	3988	13-2	4013	13-8	4166
	50-54	31,603	14335	34,103	15481	12	3658	5- 9	1753	2-7	787	3-2	965	12-7	3835	12-9	3886	13-5	4089
	5K-5R	31,603	14355	34,103	15481	12	3658	5- 9	1753	2-7	787	3-2	965	12-7	3835	12-9	3886	13-5	4089
	55-59	33,631	15255	36,131	16389	14	4267	6-10	2083	2-7	787	3-2	965	13-1	3988	13-3	4039	13-9	4191
	5T-5Z	33,631	15255	36,131	16389	14	4267	6-10	2083	2-7	787	3-2	965	13-1	3988	13-3	4039	13-9	4191
4	50-54	32,933	14938	36,233	16435	12	3658	5- 9	1753	2-8	813	3-4	1016	13-1	3988	12-9	3886	13-4	4064
	5K-5R	32,933	14938	36,233	16435	12	3658	5- 9	1753	2-8	813	3-4	1016	13-1	3988	12-9	3886	13-4	4064
	55-59	34,661	15722	37,961	17219	14	4267	6- 2	1880	2-8	813	3-4	1016	13-7	4140	13-1	3998	14-4	4369
	5T-5Z	34,661	15722	37,961	17219	14	4267	6- 2	1880	2-8	813	3-4	1016	13-7	4140	13-1	3998	14-4	4369
	60-64	35,433	16072	38,733	17569	12	3658	5- 9	1753	2-8	813	3-4	1016	13-1	2988	12-9	3886	13-4	4064
	6K-6R	35,433	16072	38,733	17569	12	3658	5- 9	1753	2-8	813	3-4	1016	13-1	3988	12-9	3886	13-4	4064
	65-69	37,536	17026	40,836	18523	14	4267	6- 2	1880	2-8	813	3-4	1016	13-7	4140	13-1	3998	14-4	4369
	6T-6Z	37,536	17026	40,836	18523	14	4267	6- 2	1880	2-8	813	3-4	1016	13-7	4140	13-1	3998	14-4	4369

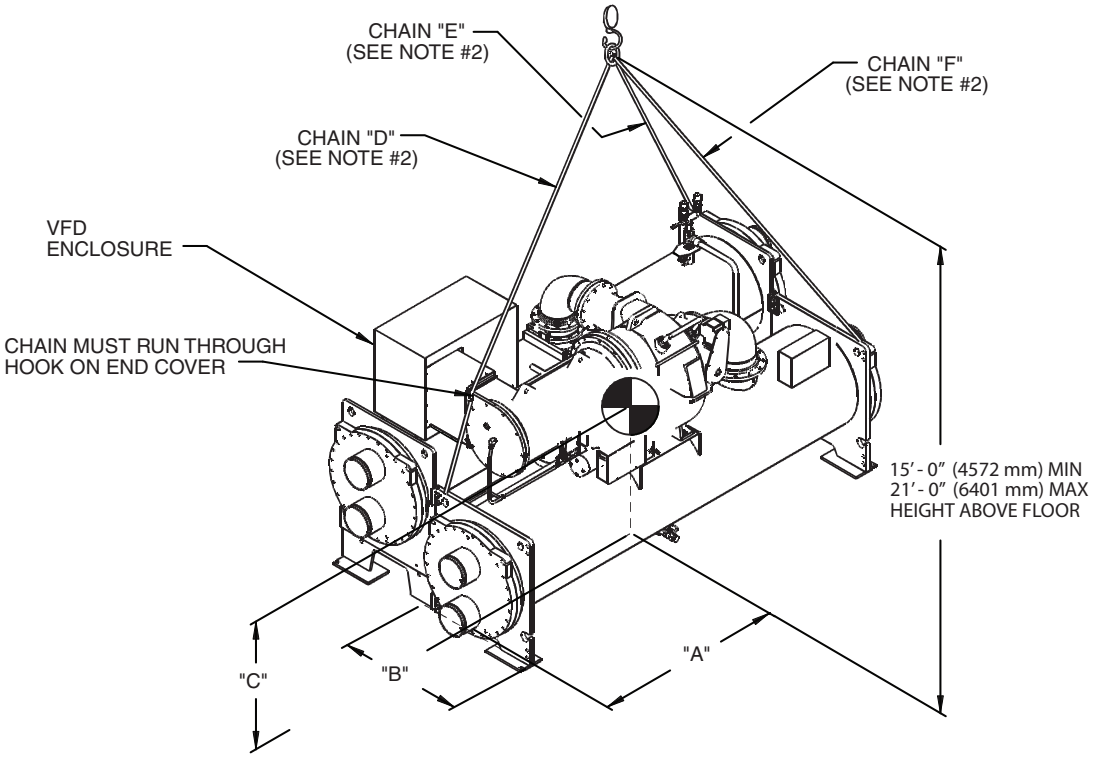

MACHINE RIGGING GUIDE

NOTES:

1. Each chain must be capable of supporting the entire weight of the machine. See chart for maximum weights.
2. Chain lengths shown are typical for 15′ (4572 mm) lifting height. Some minor adjustments may be required.
3. Dimensions "A" and "B" define distance from machine center of gravity to tube sheet outermost surfaces. Dimension "C" defines distance from machine center of gravity to floor.
4. Ensure that rigging cable is over the cable hook on the motor end cover before lifting.

Fig. 5 — Machine Rigging Guide (Heat Exchanger Size 10 Through 6Z) with Free-Standing or Unit-Mounted Starter, LF2 VFD (442 or 608A), Standard Tier VFD (230, 335, 445, 485, 550, 605, 680A Drive), or 575-v VFD

COMP FRAME SIZE	HEAT EXCH SIZE	MAXIMUM MACHINE WEIGHT		VESSEL LENGTH		DIM. "A"		DIM. "B"		DIM. "C"		CHAIN LENGTH					
												"D"		"E"		"F"	
		lb	kg	ft	mm	ft-in.	mm	ft-in.	mm	ft-in.	mm	ft-in.	mm	ft-in.	mm	ft-in.	mm
4	70-74	49,949	22656	14	4267	6- 5	1956	3-9	1143	4-9	1448	9- 8	2946	11-6	3505	11- 8	3556
	7K-7R	49,949	22656	14	4267	6- 5	1956	3-9	1143	4-9	1448	9- 8	2946	11-6	3505	11- 8	3556
5	70-74	55,139	25011	14	4267	6- 2	1880	3-9	1143	4-9	1448	9-10	2997	11-4	3454	11- 6	3505
	7K-7R	55,139	25011	14	4267	6- 2	1880	3-9	1143	4-9	1448	9-10	2997	11-4	3454	11- 6	3505
	75-79	59,357	26294	16	4877	6-10	2083	3-9	1143	4-9	1448	10- 6	3200	12-8	3861	12-10	3912
	7T-7Z	59,357	26294	16	4877	6-10	2083	3-9	1143	4-9	1448	10- 6	3200	12-8	3861	12-10	3912
	80-84	64,866	29423	14	4267	6- 2	1880	3-9	1143	4-9	1448	9-10	2997	11-4	3454	11- 6	3505
	8K-8R	64,866	29423	14	4267	6- 2	1880	3-9	1143	4-9	1448	9-10	2997	11-4	3454	11- 6	3505
	85-89	68,839	31225	16	4877	6-10	2083	3-9	1143	4-9	1448	10- 6	3200	12-8	3861	12-10	3912
	8T-8Z	68,839	31225	16	4877	6-10	2083	3-9	1143	4-9	1448	10- 6	3200	12-8	3861	12-10	3912

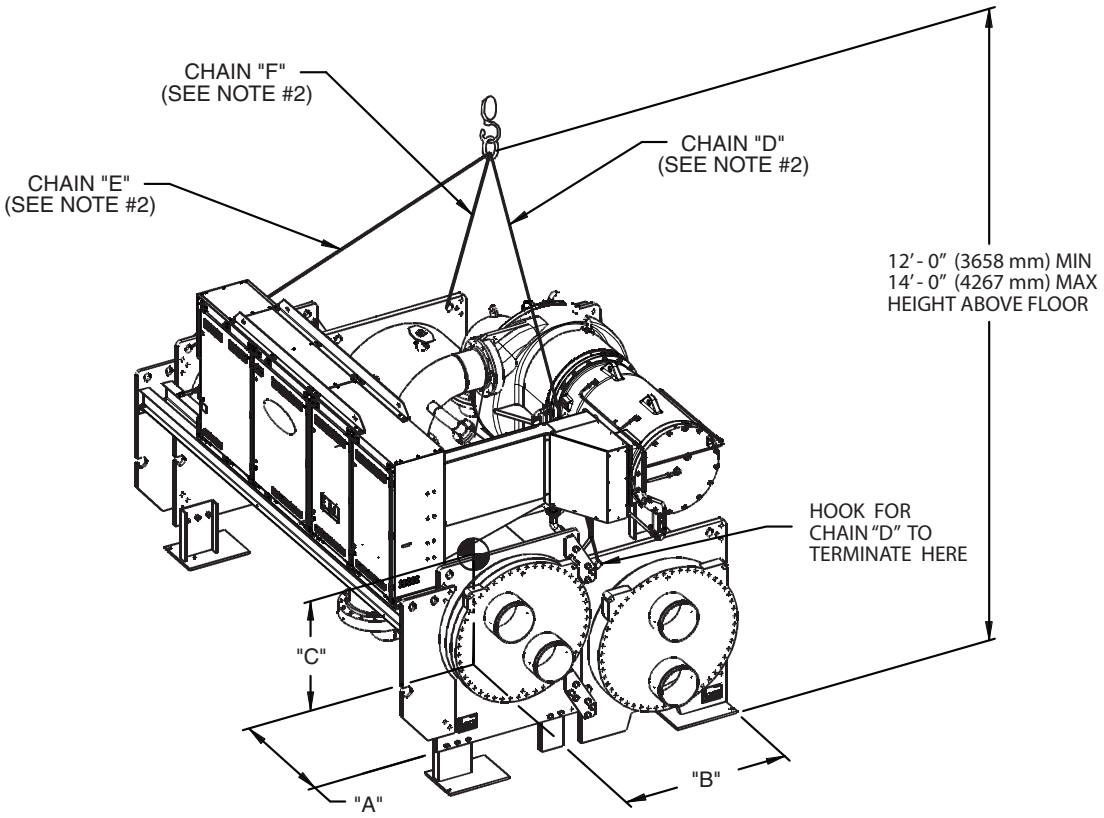

MACHINE RIGGING GUIDE

NOTES:
1. Each chain must be capable of supporting the entire weight of the machine. See chart for maximum weights.
2. Chain lengths shown are typical for 13′ (3962 mm) lifting height. Some minor adjustments may be required.
3. Dimensions "A" and "B" define distance from machine center of gravity to tube sheet outermost surfaces. Dimension "C" defines distance from machine center of gravity to floor.
4. Care must be taken to prevent damage to machine while threading chain "D" between drive, conduit, and piping.

Fig. 6 — Machine Rigging Guide (Heat Exchanger Size 70 Through 8Z) with 900A or 1200A LF2 VFD or Standard Tier VFD (765, 855, 960, 1070, 1275, 1530A Drive)

COMP FRAME SIZE	HEAT EXCH SIZE	MAXIMUM MACHINE WEIGHT		VESSEL LENGTH		DIM. "A"		DIM. "B"		DIM. "C"		CHAIN LENGTH					
												"D"		"E"		"F"	
		lb	kg	ft	mm	ft-in.	mm	ft-in.	mm	ft-in.	mm	ft-in.	mm	ft-in.	mm	ft-in.	mm
5	70-74	46,119	20919	14	4267	6- 2	1880	3-6	1067	4-7	1397	11- 6	3505	12-5	3785	12-9	3886
	7K-7R	46,119	20919	14	4267	6- 2	1880	3-6	1067	4-7	1397	11- 6	3505	12-5	3785	12-9	3886
	75-79	49,977	22669	16	4877	6-11	2108	3-6	1067	4-7	1397	11-11	3632	13-3	4039	13-7	4140
	7T-7Z	49,977	22669	16	4877	6-11	2108	3-6	1067	4-7	1397	11-11	3632	13-3	4039	13-7	4140
	80-84	55,981	25393	14	4267	6- 2	1880	3-6	1067	4-7	1397	11- 6	3505	12-5	3785	12-9	3886
	8K-8R	55,981	25393	14	4267	6- 2	1880	3-6	1067	4-7	1397	11- 6	3505	12-5	3785	12-9	3886
	85-89	59,564	27018	16	4877	6-11	2108	3-6	1067	4-7	1397	11-11	3632	13-3	4039	13-7	4140
	8T-8Z	59,564	27018	16	4877	6-11	2108	3-6	1067	4-7	1397	11-11	3632	13-3	4039	13-7	4140

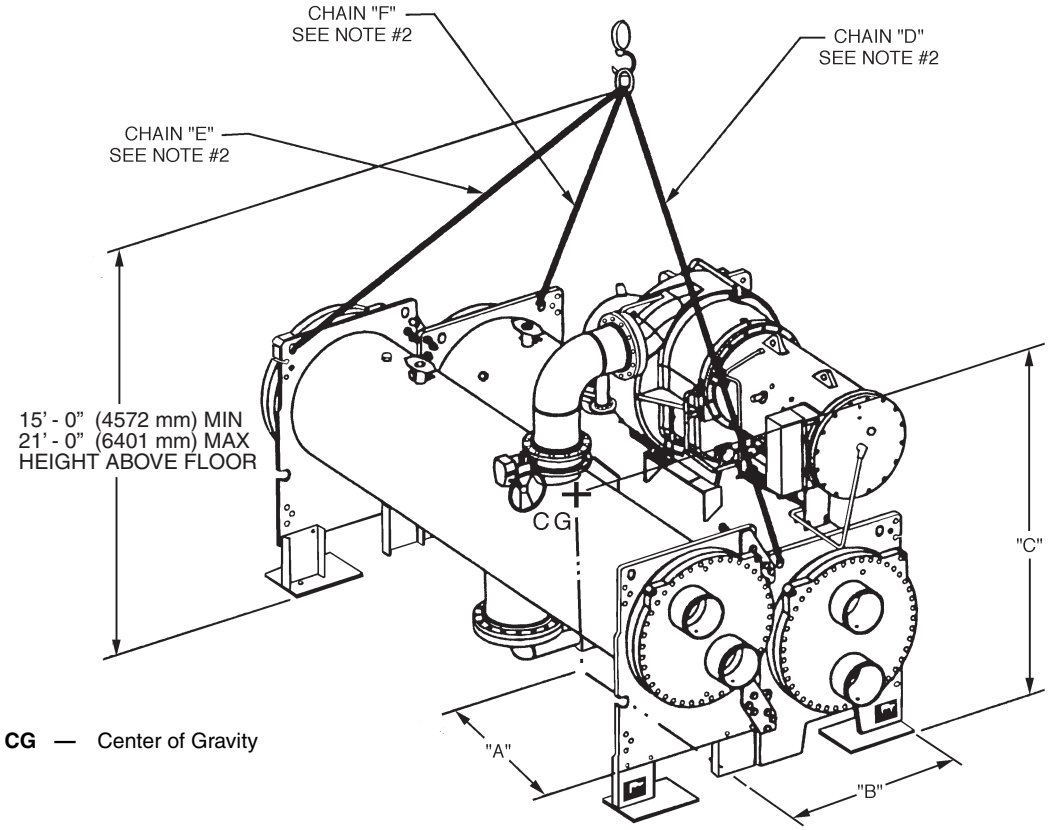

MACHINE RIGGING GUIDE

NOTES:
1. Each chain must be capable of supporting the entire weight of the machine. See chart for maximum weights.
2. Chain lengths shown are typical for 15′ (4572 mm) lifting height. Some minor adjustments may be required.
3. Dimensions "A" and "B" define distance from machine center of gravity to tube sheet outermost surfaces. Dimension "C" defines distance from machine center of gravity to floor.

Fig. 7 — Machine Rigging Guide (Heat Exchanger Size 70 Through 8Z) with Free-Standing or Unit-Mounted Starter

Table 4 — 19XR Component Weights

COMPONENT	FRAME 2 COMPRESSOR*		FRAME 3 COMPRESSOR*		FRAME 4 COMPRESSOR*		FRAME 5 COMPRESSOR*	
	lb	kg	lb	kg	lb	kg	lb	kg
Suction Elbow	116	53	185	84	239	108	407	185
Discharge Elbow	100	45	125	57	157	71	325	147
Control Panel†	34	15	34	15	34	15	34	15
Optional Cooler Inlet Isolation Valve	8	4	13	6	20	9	24	11
Optional Discharge Isolation Valve	26	12	46	21	74	34	108	49
Std Tier VFD — 380, 400, and 460-v (230, 335, 445 A)	650	295	650	295	—	—	—	—
Std Tier VFD — 380, 400, and 460-v (485, 550 A)	—	—	1035	469	1035	469	—	—
Std Tier VFD — 380, 400, and 460-v (605, 680 A)	—	—	1600	726	1600	726	—	—
Std Tier VFD — 380, 400, and 460-v (765 A)	—	—	—	—	1600	726	—	—
Std Tier VFD — 380, 400, and 460-v (855, 960, 1070 A)	—	—	—	—	1600	726	1600	726
Std Tier VFD — 380, 400, and 460-v (1275 A)	—	—	—	—	3000	1361	3000	1361
Std Tier VFD — 380, 400, and 460-v (1530 A)	—	—	—	—	—	—	3000	1361
LiquiFlo™ 2 VFD — 380, 400, and 460-v (442 A)	1600	726	1600	726	—	—	—	—
LiquiFlo 2 VFD — 380, 400, and 460-v (608 A)	—	—	1600	726	1600	726	—	—
LiquiFlo 2 VFD — 380, 400, and 460-v (900 A)	—	—	—	—	2800	1270	2800	1270
LiquiFlo 2 VFD — 380, 400, and 460-v (1200 A)	—	—	—	—	2850	1293	2850	1293
LiquiFlo 2 VFD — 575-v (390 A)	2200	998	2200	998	—	—	—	—
VFD Shelf	—	—	—	—	1049	476	1049	476

*To determine compressor frame size, refer to 19XR,XRV Computer Selection Program.
†Included in total cooler weight.

NOTE: VFD sizes are available on select heat exchanger models; consult the 19XR,XRV Computer Selection program.

Table 5A — 19XR Compressor and Motor Weights* — Compressor Frame Size 2†

MOTOR CODE	ENGLISH						SI					
	Compressor Weight** (lb)	60 Hz		50 Hz		End Bell Cover Weight (lb)	Compressor Weight** (kg)	60 Hz		50 Hz		End Bell Cover Weight (kg)
		Stator Weight†† (lb)	Rotor Weight (lb)	Stator Weight†† (lb)	Rotor Weight (lb)			Stator Weight†† (kg)	Rotor Weight (kg)	Stator Weight†† (kg)	Rotor Weight (kg)	
STANDARD-EFFICIENCY MOTORS / LOW VOLTAGE (200-575 v)												
BDS	2300	900	190	915	205	185	1043	408	86	415	93	84
BES	2300	915	200	965	220	185	1043	415	91	438	100	84
BFS	2300	975	215	1000	230	185	1043	442	98	454	104	84
BGS	2300	1000	230	1060	250	185	1043	454	104	481	113	84
BHS	2300	1030	240	1105	265	185	1043	467	109	501	120	84
BJS	2300	1105	265	—	—	185	1043	501	120	—	—	84
HIGH-EFFICIENCY MOTORS / LOW VOLTAGE (200-575 v)												
BDH	2300	1030	240	1030	240	185	1043	467	109	467	109	84
BEH	2300	1070	250	1070	250	185	1043	485	113	485	113	84
BFH	2300	1120	265	1120	265	185	1043	508	120	508	120	84
BGH	2300	1175	290	1175	290	185	1043	533	132	533	132	84
BHH	2300	1175	290	1175	290	185	1043	533	132	533	132	84
BJH	2300	1175	290	—	—	185	1043	533	132	—	—	84
JBH	2300	1003	226	1063	248	185	1043	455	103	482	112	84
JCH	2300	1063	248	1113	263	185	1043	482	112	505	119	84
JDH	2300	1113	263	1149	278	185	1043	505	119	521	126	84
JEH	2300	1149	278	1196	295	185	1043	521	126	542	134	84
JFH	2300	1196	295	—	—	185	1043	542	134	—	—	84

*Total compressor weight is the sum of the compressor aerodynamic components (compressor weight column), stator, rotor, and end bell cover weights.
†See Model Number Nomenclature in Fig. 2.

**Compressor aerodynamic component weight only, motor weight not included. Applicable to standard compressors only. For high lift compressors, contact Carrier Chiller Marketing for weights.
††Stator weight includes the stator and shell.

Table 5B — 19XR Compressor and Motor Weights* — Compressor Frame Size 3†

MOTOR CODE	ENGLISH						SI					
	Compressor Weight** (lb)	60 Hz		50 Hz		End Bell Cover Weight (lb)	Compressor Weight** (kg)	60 Hz		50 Hz		End Bell Cover Weight (kg)
		Stator Weight†† (lb)	Rotor Weight (lb)	Stator Weight†† (lb)	Rotor Weight (lb)			Stator Weight†† (kg)	Rotor Weight (kg)	Stator Weight†† (kg)	Rotor Weight (kg)	
STANDARD-EFFICIENCY MOTORS / LOW VOLTAGE (200-575 v)												
CBS	2816	1146	219	1188	236	274	1277	520	99	539	107	124
CCS	2816	1171	227	1196	242	274	1277	531	103	542	110	124
CDS	2816	1198	237	1258	255	274	1277	543	108	571	116	124
CES	2816	1207	240	1272	258	274	1277	547	109	577	117	124
CLS	2816	1247	249	1328	273	274	1277	566	113	602	124	124
CMS	2816	1270	257	1353	278	274	1277	576	117	614	126	124
CNS	2816	1321	266	1386	282	274	1277	599	121	629	128	124
CPS	2816	1334	269	1401	287	274	1277	605	122	635	130	124
CQS	2816	1353	276	1408	290	274	1277	614	125	639	132	124
CRS	2816	1259	321	—	—	274	1277	571	146	—	—	124
CRS (380v)	2816	1328	346	—	—	274	1277	602	157	—	—	124
STANDARD-EFFICIENCY MOTORS / MEDIUM VOLTAGE (2400-4160 v)												
CBS	2816	1154	236	1160	255	274	1277	523	107	526	116	124
CCS	2816	1182	243	1177	260	274	1277	536	110	534	118	124
CDS	2816	1220	252	1212	270	274	1277	553	114	550	122	124
CES	2816	1253	261	1259	281	274	1277	568	118	571	127	124
CLS	2816	1261	265	1271	284	274	1277	572	120	577	129	124
CMS	2816	1294	273	1318	293	274	1277	587	124	598	133	124
CNS	2816	1314	280	1357	303	274	1277	596	127	616	137	124
CPS	2816	1343	282	1413	308	274	1277	609	128	641	140	124
CQS	2816	1419	300	1522	336	274	1277	644	136	690	152	124
HIGH-EFFICIENCY MOTORS / LOW VOLTAGE (200-575 v)												
CBH	2816	1235	239	1290	254	274	1277	560	108	585	115	124
CCH	2816	1260	249	1295	259	274	1277	572	113	587	117	124
CDH	2816	1286	258	1358	273	274	1277	583	117	616	124	124
CEH	2816	1305	265	1377	279	274	1277	592	120	625	127	124
CLH	2816	1324	271	1435	292	274	1277	601	123	651	132	124
CMH	2816	1347	275	1455	298	274	1277	611	125	660	135	124
CNH	2816	1358	278	1467	301	274	1277	616	126	665	137	124
CPH	2816	1401	290	1479	304	274	1277	635	132	671	138	124
CQH	2816	1455	304	1479	304	274	1277	670	138	671	138	124
KBH	2816	1313	276	1353	285	274	1277	596	125	614	129	124
KCH	2816	1353	285	1381	291	274	1277	614	129	626	132	124
KDH	2816	1381	291	1417	307	274	1277	626	132	643	139	124
KEH	2816	1417	307	1441	313	274	1277	643	139	654	142	124
KFH	2816	1441	313	1470	320	274	1277	654	142	667	145	124
KGH	2816	1470	320	1505	333	274	1277	667	145	683	151	124
KHH	2816	1505	333	—	—	274	1277	683	151	—	—	124

*Total compressor weight is the sum of the compressor aerodynamic components (compressor weight column), stator, rotor, and end bell cover weights.
†See Model Number Nomenclature in Fig. 2.

**Compressor aerodynamic component weight only, motor weight not included. Applicable to standard compressors only. For high lift compressors, contact Carrier Chiller Marketing for weights.
††Stator weight includes the stator and shell.

Table 5B — 19XR Compressor and Motor Weights* — Compressor Frame Size 3† (cont)

MOTOR CODE	ENGLISH						SI					
	Compressor Weight** (lb)	60 Hz		50 Hz		End Bell Cover Weight (lb)	Compressor Weight** (kg)	60 Hz		50 Hz		End Bell Cover Weight (kg)
		Stator Weight†† (lb)	Rotor Weight (lb)	Stator Weight†† (lb)	Rotor Weight (lb)			Stator Weight†† (kg)	Rotor Weight (kg)	Stator Weight†† (kg)	Rotor Weight (kg)	
HIGH-EFFICIENCY MOTORS / MEDIUM VOLTAGE (2400-4160 v)												
CBH	2816	1114	242	1156	255	274	1277	505	110	524	116	124
CCH	2816	1129	247	1163	257	274	1277	512	112	528	117	124
CDH	2816	1155	253	1190	263	274	1277	524	115	540	119	124
CEH	2816	1175	263	1236	276	274	1277	533	119	561	125	124
CLH	2816	1242	280	1305	296	274	1277	563	127	592	134	124
CMH	2816	1321	303	1305	296	274	1277	599	137	592	134	124
CNH	2816	1369	316	1386	316	274	1277	621	143	629	143	124
CPH	2816	1411	329	1386	316	274	1277	640	149	629	143	124
CQH	2816	1411	329	1428	329	274	1277	640	149	648	149	124

*Total compressor weight is the sum of the compressor aerodynamic components (compressor weight column), stator, rotor, and end bell cover weights.
†See Model Number Nomenclature in Fig. 2.

**Compressor aerodynamic component weight only, motor weight not included. Applicable to standard compressors only. For high lift compressors, contact Carrier Chiller Marketing for weights.
††Stator weight includes the stator and shell.

Table 5C — 19XR Compressor and Motor Weights* — Compressor Frame Size 4†

MOTOR CODE	ENGLISH						SI					
	Compressor Weight** (lb) Fixed Ring/ Split Ring	60 Hz		50 Hz		End Bell Cover Weight (lb)	Compressor Weight** (kg)	60 Hz		50 Hz		End Bell Cover Weight (kg)
		Stator Weight†† (lb)	Rotor Weight (lb)	Stator Weight†† (lb)	Rotor Weight (lb)			Stator Weight†† (kg)	Rotor Weight (kg)	Stator Weight†† (kg)	Rotor Weight (kg)	
STANDARD-EFFICIENCY MOTORS / LOW VOLTAGE (200-575 v)												
DBS	3425 / 4211	1570	324	1725	347	236	1554 / 1910	712	147	782	157	107
DCS	3425 / 4211	1580	326	1737	352	236	1554 / 1910	717	148	788	160	107
DDS	3425 / 4211	1595	329	1749	357	236	1554 / 1910	723	149	793	162	107
DES	3425 / 4211	1685	345	1762	365	236	1554 / 1910	764	156	799	166	107
DFS	3425 / 4211	1690	348	1801	372	236	1554 / 1910	767	158	817	169	107
DGS	3425 / 4211	1692	352	1858	386	236	1554 / 1910	767	160	843	175	107
DHS	3425 / 4211	1774	366	1904	398	236	1554 / 1910	805	166	864	181	107
DJS	3425 / 4211	—	—	2020	401	318	1554 / 1910	—	—	916	182	142
STANDARD-EFFICIENCY MOTORS / MEDIUM VOLTAGE (2400-4160 v)												
DBS	3425 / 4211	1524	296	1637	327	236	1554 / 1910	691	134	743	148	107
DCS	3425 / 4211	1569	307	1685	354	236	1554 / 1910	712	139	764	161	107
DDS	3425 / 4211	1588	313	1713	357	236	1554 / 1910	720	142	777	162	107
DES	3425 / 4211	1613	324	1746	360	236	1554 / 1910	732	147	792	163	107
DFS	3425 / 4211	1675	347	1811	381	236	1554 / 1910	760	157	821	173	107
DGS	3425 / 4211	1704	355	1998	422	236 (60 Hz) 318 (50 Hz)	1554 / 1910	773	161	906	191	107 (60 Hz) 142 (50 Hz)
DHS	3425 / 4211	1737	361	2056	443	236 (60 Hz) 318 (50 Hz)	1554 / 1910	788	164	933	201	107 (60 Hz) 142 (50 Hz)
DJS	3425 / 4211	1769	365	2101	464	236 (60 Hz) 318 (50 Hz)	1554 / 1910	802	166	953	210	107 (60 Hz) 142 (50 Hz)
STANDARD-EFFICIENCY MOTORS / MEDIUM VOLTAGE (6300-6900 v)												
DDS	3425 / 4211	1919	423	2069	458	318	1554 / 1910	870	192	938	208	142
DES	3425 / 4211	1939	428	2089	463	318	1554 / 1910	880	194	947	210	142
DFS	3425 / 4211	1989	448	2139	478	318	1554 / 1910	902	203	970	217	142
DGS	3425 / 4211	2054	473	—	—	318	1554 / 1910	932	215	—	—	142
DHS	3425 / 4211	2099	488	—	—	318	1554 / 1910	952	221	—	—	142
DJS	3425 / 4211	2159	508	—	—	318	1554 / 1910	979	230	—	—	142
HIGH-EFFICIENCY MOTORS / LOW VOLTAGE (200-575 v)												
DBH	3425 / 4211	1773	406	1827	406	318	1554 / 1910	804	184	829	184	142
DCH	3425 / 4211	1827	406	1827	414	318	1554 / 1910	829	184	829	188	142
DDH	3425 / 4211	1827	414	1881	422	318	1554 / 1910	829	188	853	191	142
DEH	3425 / 4211	1881	422	1881	422	318	1554 / 1910	853	191	853	191	142
DFH	3425 / 4211	1881	439	1963	439	318	1554 / 1910	853	199	890	199	142
DGH	3425 / 4211	1963	455	1963	455	318	1554 / 1910	890	206	890	206	142
DHH	3425 / 4211	1963	455	2050	463	318	1554 / 1910	890	206	930	210	142
DJH	3425 / 4211	—	—	2050	471	318	1554 / 1910	—	—	930	213	142
DKH	3425 / 4211	2050	471	—	—	318	1554 / 1910	930	214	—	—	142

*Total compressor weight is the sum of the compressor aerodynamic components (compressor weight column), stator, rotor, and end bell cover weights.
†See Model Number Nomenclature in Fig. 2.

**Compressor aerodynamic component weight only, motor weight not included. Applicable to standard compressors only. For high lift compressors, contact Carrier Chiller Marketing for weights. For compressor frame size 4, two compressor weights are shown. The second value, 4211 lb (1910 kg), represents the weight when the compressor is equipped with a split ring diffuser (SRD).
††Stator weight includes the stator and shell.

Table 5C — 19XR Compressor and Motor Weights* — Compressor Frame Size 4† (cont)

MOTOR CODE	ENGLISH						SI					
	Compressor Weight** (lb)	60 Hz		50 Hz		End Bell Cover Weight (lb)	Compressor Weight** (kg)	60 Hz		50 Hz		End Bell Cover Weight (kg)
		Stator Weight†† (lb)	Rotor Weight (lb)	Stator Weight†† (lb)	Rotor Weight (lb)			Stator Weight†† (kg)	Rotor Weight (kg)	Stator Weight†† (kg)	Rotor Weight (kg)	
HIGH-EFFICIENCY MOTORS / LOW VOLTAGE (200-575v)												
LBH	3425 / 4211	1873	364	1939	389	318	1554 / 1910	850	165	880	176	144
LCH	3425 / 4211	1939	389	2023	406	318	1554 / 1910	880	176	918	184	144
LDH	3425 / 4211	2023	406	2043	417	318	1554 / 1910	918	184	927	189	144
LEH	3425 / 4211	2043	417	2096	434	318	1554 / 1910	927	189	951	197	144
LFH	3425 / 4211	2096	434	2133	444	318	1554 / 1910	951	197	968	201	144
LGH	3425 / 4211	2133	444	2199	458	318	1554 / 1910	968	201	997	208	144
LHH	3425 / 4211	2199	458	2066	437	318	1554 / 1910	997	208	937	198	144
HIGH-EFFICIENCY MOTORS / MEDIUM VOLTAGE (2400-4160v)												
DBH	3425 / 4211	1950	405	1950	405	318	1554 / 1910	885	184	885	184	144
DCH	3425 / 4211	1950	405	2025	429	318	1554 / 1910	885	184	919	195	144
DDH	3425 / 4211	1950	405	2025	429	318	1554 / 1910	885	184	919	195	144
DEH	3425 / 4211	2025	429	2100	452	318	1554 / 1910	919	195	953	205	144
DFH	3425 / 4211	2025	429	2100	452	318	1554 / 1910	919	195	953	205	144
DGH	3425 / 4211	2100	452	2200	480	318	1554 / 1910	953	205	998	218	144
DHH	3425 / 4211	2100	452	2320	575	318	1554 / 1910	953	205	1052	261	144
DJH	3425 / 4211	2100	452	2320	587	318	1554 / 1910	953	205	1052	266	144
DKH	3425 / 4211	2320	587	—	—	318	1554 / 1910	1052	266	—	—	144
HIGH-EFFICIENCY MOTORS / MEDIUM VOLTAGE (6300-6900v)												
DDH	3425 / 4211	2150	536	2250	546	318	1554 / 1910	975	243	1021	248	144
DEH	3425 / 4211	2150	550	2250	550	318	1554 / 1910	975	249	1021	249	144
DFH	3425 / 4211	2250	575	2380	567	318	1554 / 1910	1021	261	1080	261	144
DGH	3425 / 4211	2250	599	2380	599	318	1554 / 1910	1021	272	1080	272	144
DHH	3425 / 4211	2380	604	2380	604	318	1554 / 1910	1080	274	1080	274	144
DJH	3425 / 4211	2380	614	2380	614	318	1554 / 1910	1080	279	1080	279	144
DKH	3425 / 4211	2380	614	—	—	318	1554 / 1910	1080	279	—	—	144

*Total compressor weight is the sum of the compressor aerodynamic components (compressor weight column), stator, rotor, and end bell cover weights.
†See Model Number Nomenclature in Fig. 2.

**Compressor aerodynamic component weight only, motor weight not included. Applicable to standard compressors only. For high lift compressors, contact Carrier Chiller Marketing for weights. For compressor frame size 4, two compressor weights are shown. The second value, 4211 lb (1910 kg), represents the weight when the compressor is equipped with a split ring diffuser (SRD).
††Stator weight includes the stator and shell.

Table 5D — 19XR Compressor and Motor Weights* — Compressor Frame Size 5†

MOTOR CODE	ENGLISH						SI					
	Compressor Weight** (lb)	60 Hz		50 Hz		End Bell Cover Weight (lb)	Compressor Weight** (kg)	60 Hz		50 Hz		End Bell Cover Weight (kg)
		Stator Weight†† (lb)	Rotor Weight (lb)	Stator Weight†† (lb)	Rotor Weight (lb)			Stator Weight†† (kg)	Rotor Weight (kg)	Stator Weight†† (kg)	Rotor Weight (kg)	
STANDARD-EFFICIENCY MOTORS / LOW VOLTAGE (200-575 v)												
EHS	7285	2843	741	2943	775	414	3304	1290	336	1335	352	188
EJS	7285	2826	741	2943	775	414	3304	1281	336	1335	352	188
EKS	7285	2943	775	2997	810	414	3304	1335	352	1359	367	188
ELS	7285	2932	775	2997	810	414	3304	1330	352	1359	367	188
EMS	7285	2986	810	3096	862	414	3304	1354	367	1404	391	188
ENS	7285	2986	810	3203	914	414	3304	1354	367	1453	415	188
EPS	7285	2986	810	3203	914	414	3304	1354	367	1453	415	188
EQS	7285	3013	621	—	—	414	3304	1367	282	—	—	188
STANDARD-EFFICIENCY MOTORS / MEDIUM VOLTAGE (2400-4160 v)												
EHS	7285	2744	706	2818	741	414	3304	1245	320	1278	336	188
EJS	7285	2816	741	2892	775	414	3304	1277	336	1312	352	188
EKS	7285	2816	741	2930	775	414	3304	1277	336	1329	352	188
ELS	7285	2808	741	3005	810	414	3304	1274	336	1363	367	188
EMS	7285	2892	775	3005	810	414	3304	1322	352	1363	367	188
ENS	7285	2997	775	3143	879	414	3304	1359	352	1426	399	188
EPS	7285	2967	810	3144	879	414	3304	1346	367	1426	399	188
EQS	7285	3081	872	—	—	414	3304	1398	396	—	—	188
STANDARD-EFFICIENCY MOTORS / MEDIUM VOLTAGE (6300-6900 v)												
EHS	7285	2773	735	2845	769	414	3304	1258	333	1290	349	188
EJS	7285	2855	769	2855	769	414	3304	1295	349	1295	349	188
EKS	7285	2919	803	2919	803	414	3304	1324	364	1324	364	188
ELS	7285	2908	803	3058	871	414	3304	1319	364	1387	395	188
EMS	7285	3029	854	3068	871	414	3304	1374	387	1392	395	188
ENS	7285	3023	854	3281	974	414	3304	1371	387	1488	442	188
EPS	7285	3068	871	3288	974	414	3304	1392	395	1491	442	188
HIGH-EFFICIENCY MOTORS / LOW VOLTAGE (200-575 v)												
EHH	7285	2939	776	2995	810	414	3304	1333	352	1359	367	188
EJH	7285	2944	776	3002	810	414	3304	1335	352	1362	367	188
EKH	7285	2992	810	3110	862	414	3304	1357	367	1411	391	188
ELH	7285	2299	810	3099	862	414	3304	1043	367	1406	391	188
EMH	7285	2965	810	3210	914	414	3304	1345	367	1456	415	188
ENH	7285	3015	855	3293	974	414	3304	1368	388	1494	442	188
EPH	7285	3029	855	3289	974	414	3304	1374	388	1492	442	188
EQH	7285	3162	664	—	—	414	3304	1434	301	—	—	188

*Total compressor weight is the sum of the compressor aerodynamic components (compressor weight column), stator, rotor, and end bell cover weights.
†See Model Number Nomenclature in Fig. 2.

**Compressor aerodynamic component weight only, motor weight not included. Applicable to standard compressors only. For high lift compressors, contact Carrier Chiller Marketing for weights.
††Stator weight includes the stator and shell.

Table 5D — 19XR Compressor and Motor Weights* — Compressor Frame Size 5† (cont)

MOTOR CODE	ENGLISH						SI					
	Compressor Weight** (lb)	60 Hz		50 Hz		End Bell Cover Weight (lb)	Compressor Weight** (kg)	60 Hz		50 Hz		End Bell Cover Weight (kg)
		Stator Weight†† (lb)	Rotor Weight (lb)	Stator Weight†† (lb)	Rotor Weight (lb)			Stator Weight†† (kg)	Rotor Weight (kg)	Stator Weight†† (kg)	Rotor Weight (kg)	
HIGH-EFFICIENCY MOTORS / LOW VOLTAGE (200-575 v)												
MBH	7285	2795	645	2856	665	414	3304	1268	293	1295	302	188
MCH	7285	2873	672	2925	693	414	3304	1303	305	1327	314	188
MDH	7285	2906	684	3013	724	414	3304	1318	310	1367	328	188
MEH	7285	2956	704	3071	737	414	3304	1341	319	1392	334	188
MFH	7285	3034	724	3153	791	414	3304	1376	328	1430	359	188
MGH	7285	3071	737	—	—	414	3304	1393	334	—	—	188
HIGH-EFFICIENCY MOTORS / MEDIUM VOLTAGE (2400-4160 v)												
EHH	7285	2939	776	2997	810	414	3304	1333	352	1359	367	188
EJH	7285	2999	810	3108	862	414	3304	1360	367	1410	391	188
EKH	7285	2988	810	3102	862	414	3304	1355	367	1407	391	188
ELH	7285	2981	810	3065	872	414	3304	1352	367	1390	396	188
EMH	7285	3031	855	3077	872	414	3304	1375	388	1396	396	188
ENH	7285	3075	872	3260	974	414	3304	1395	396	1479	442	188
EPH	7285	3081	872	3298	974	414	3304	1398	396	1496	442	188
EQH	7285	3195	657	—	—	414	3304	1449	298	—	—	188
HIGH-EFFICIENCY MOTORS / MEDIUM VOLTAGE (6300-6900 v)												
EHH	7285	2998	810	3097	862	414	3304	1360	367	1405	391	188
EJH	7285	3029	855	3100	862	414	3304	1374	388	1406	391	188
EKH	7285	3049	855	3064	872	414	3304	1383	388	1390	396	188
ELH	7285	3068	872	3060	872	414	3304	1390	396	1388	396	188
EMH	7285	—	—	3072	872	414	3304	—	—	1393	396	188
ENH	7285	3075	872	3260	974	414	3304	1395	396	1479	442	188
EPH	7285	3081	872	3288	974	414	3304	1398	396	1491	442	188
EQH	7285	3195	657	—	—	414	3304	1449	298	—	—	188
HIGH-EFFICIENCY MOTORS / HIGH VOLTAGE (10000-11000 v)												
MCH	7285	—	—	3956	678	414	3304	—	—	1794	308	188
MDH	7285	—	—	3956	678	414	3304	—	—	1794	308	188
MFH	7285	—	—	4062	719	414	3304	—	—	1842	326	188
MGH	7285	3820	657	—	—	414	3304	1733	298	—	—	188
MHH	7285	3820	657	—	—	414	3304	1733	298	—	—	188
HIGH-EFFICIENCY MOTORS / HIGH VOLTAGE (13800 v)												
MHH	7285	3779	646	—	—	414	3304	1714	293	—	—	188

*Total compressor weight is the sum of the compressor aerodynamic components (compressor weight column), stator, rotor, and end bell cover weights.
†See Model Number Nomenclature in Fig. 2.

**Compressor aerodynamic component weight only, motor weight not included. Applicable to standard compressors only. For high lift compressors, contact Carrier Chiller Marketing for weights.
††Stator weight includes the stator and shell.

Table 6A — 19XR Heat Exchanger Data — Drive End Entering Cooler Water

Code†	English						Metric (SI)					
	Dry Rigging Weight (lb)*		Machine Charge				Dry Rigging Weight (kg)*		Machine Charge			
	Cooler Only	Condenser Only	Refrigerant Weight (lb)		Water Weight (lb)		Cooler Only	Condenser Only	Refrigerant Weight (kg)		Water Weight (kg)	
			Cooler	Condenser	Cooler	Condenser			Cooler	Condenser	Cooler	Condenser
10	2707	2704	328	226	283	348	1229	1228	149	103	128	158
11	2777	2772	357	226	309	374	1261	1258	162	103	140	170
12	2848	2857	387	226	335	407	1293	1297	176	103	152	185
15	2968	2984	405	275	327	402	1346	1355	184	125	148	183
16	3054	3068	441	275	359	435	1387	1393	200	125	163	197
17	3141	3173	477	275	391	475	1426	1441	217	125	178	216
20	3407	3373	416	252	402	398	1547	1531	189	114	183	181
21	3555	3540	459	252	456	462	1614	1607	208	114	207	210
22	3711	3704	505	252	514	526	1685	1682	229	114	233	239
30	4071	3694	510	308	464	464	1848	1677	232	140	211	211
31	4253	3899	565	308	531	543	1931	1770	257	140	241	247
32	4445	4100	626	308	601	621	2018	1861	284	140	273	282
35	4343	4606	577	349	511	513	1972	2091	262	158	232	233
36	4551	4840	639	349	587	603	2066	2197	290	158	266	274
37	4769	5069	709	349	667	692	2165	2301	322	158	303	314
40	4908	5039	726	338	863	915	2228	2288	330	153	392	415
41	5078	5232	783	338	930	995	2305	2375	355	153	422	452
42	5226	5424	840	338	990	1074	2373	2462	381	153	449	488
45	5363	5602	821	383	938	998	2435	2543	373	174	426	453
46	5559	5824	874	383	1014	1088	2524	2644	397	174	460	494
47	5730	6044	949	383	1083	1179	2601	2744	431	174	492	535
50	5713	6090	897	446	1101	1225	2594	2765	407	202	500	556
51	5940	6283	974	446	1192	1304	2697	2852	442	202	541	592
52	6083	6464	1021	446	1248	1379	2762	2935	464	202	567	626
53	6141	6529	1010	446	1277	1409	2788	2964	459	202	580	640
54	6192	6591	987	446	1302	1439	2811	2992	448	202	591	653
55	6257	6785	1014	504	1201	1339	2841	3080	460	229	545	608
56	6517	7007	1101	504	1304	1429	2959	3181	500	229	592	649
57	6682	7215	1154	504	1369	1514	3034	3276	524	229	622	687
58	6751	7291	1143	504	1401	1550	3065	3310	519	229	636	704
59	6811	7363	1116	504	1430	1583	3092	3343	507	229	649	719
5A	5124	—	491	—	1023	—	2326	—	223	—	464	—
5B	5177	—	510	—	1050	—	2350	—	232	—	477	—
5C	5243	—	532	—	1079	—	2380	—	242	—	490	—
5F	5577	—	553	—	1113	—	2532	—	251	—	505	—
5G	5640	—	575	—	1143	—	2561	—	261	—	519	—
5H	5716	—	600	—	1176	—	2595	—	272	—	534	—
5K	4993	—	673	—	1067	—	2267	—	306	—	484	—
5L	5090	—	706	—	1118	—	2311	—	321	—	508	—
5M	5165	—	742	—	1162	—	2345	—	337	—	528	—
5P	5041	—	641	—	1111	—	2289	—	291	—	504	—
5Q	5131	—	678	—	1155	—	2329	—	308	—	524	—
5R	5214	—	709	—	1206	—	2367	—	322	—	548	—
5T	5425	—	768	—	1162	—	2463	—	349	—	528	—
5U	5534	—	801	—	1220	—	2512	—	364	—	554	—
5V	5620	—	843	—	1270	—	2551	—	383	—	577	—
5X	5484	—	730	—	1212	—	2490	—	331	—	550	—
5Y	5584	—	769	—	1262	—	2535	—	349	—	573	—
5Z	5678	—	805	—	1320	—	2578	—	365	—	599	—
60	6719	6764	1091	479	1400	1521	3050	3071	495	217	636	691
61	6895	6949	1150	479	1470	1597	3130	3155	522	217	667	725
62	7038	7130	1202	479	1527	1671	3195	3237	546	217	693	759
63	7103	7199	1202	479	1559	1704	3225	3268	546	217	708	774
64	7161	7264	1178	479	1587	1735	3251	3298	535	217	720	788
65	7392	6782	1241	542	1530	1667	3356	3079	563	246	695	757
66	7594	7894	1309	542	1610	1753	3448	3584	594	246	731	796
67	7759	8102	1369	542	1674	1838	3523	3678	622	246	760	834
68	7836	8182	1359	542	1711	1875	3558	3715	617	246	777	851
69	7905	8258	1332	542	1743	1911	3589	3749	605	246	791	868

*Rigging weights are for standard tubes of standard wall thickness (0.025-in. [0.635 mm] wall).

NOTES:
1. Cooler includes the control panel (ICVC), suction elbow, and 1/2 the distribution piping weight.
2. Condenser includes float valve and sump, discharge elbow, and 1/2 the distribution piping weight.
3. For special tubes refer to the 19XR,XRV Computer Selection Program.
4. All weights for standard 2-pass NIH (nozzle-in-head) design.

Table 6A — 19XR Heat Exchanger Data — Drive End Entering Cooler Water (cont)

CODE	ENGLISH						METRIC (SI)					
	Dry Rigging Weight (lb)*		Machine Charge				Dry Rigging Weight (kg)*		Machine Charge			
	Cooler Only	Condenser Only	Refrigerant Weight (lb)		Water Weight (lb)		Cooler Only	Condenser Only	Refrigerant Weight (kg)		Water Weight (kg)	
			Cooler	Condenser	Cooler	Condenser			Cooler	Condenser	Cooler	Condenser
6K	5716	—	760	—	1291	—	2595	—	345	—	586	—
6L	5804	—	797	—	1341	—	2635	—	362	—	609	—
6M	5894	—	828	—	1399	—	2676	—	376	—	635	—
6P	5768	—	725	—	1338	—	2619	—	329	—	607	—
6Q	5852	—	764	—	1385	—	2657	—	347	—	629	—
6R	5938	—	798	—	1439	—	2696	—	362	—	653	—
6T	6230	—	863	—	1405	—	2828	—	392	—	638	—
6U	6330	—	905	—	1462	—	2874	—	411	—	664	—
6V	6433	—	941	—	1528	—	2921	—	427	—	694	—
6X	6293	—	823	—	1459	—	2857	—	374	—	662	—
6Y	6388	—	868	—	1512	—	2900	—	394	—	686	—
6Z	6487	—	906	—	1574	—	2945	—	411	—	715	—
70	9942	10786	1409	840	2008	2225	4514	4897	640	381	912	1010
71	10330	11211	1539	840	2164	2389	4690	5090	699	381	982	1085
72	10632	11622	1646	840	2286	2548	4827	5276	747	381	1038	1157
73	10715	11737	1622	840	2328	2604	4865	5329	736	381	1057	1182
74	10790	11775	1584	840	2366	2622	4899	5346	719	381	1074	1190
75	10840	11859	1599	950	2183	2431	4921	5384	726	431	991	1104
76	11289	12345	1747	950	2361	2619	5125	5605	793	431	1072	1189
77	11638	12814	1869	950	2501	2801	5284	5818	849	431	1135	1272
78	11738	12949	1849	950	2548	2864	5329	5879	839	431	1157	1300
79	11828	12994	1806	950	2592	2885	5370	5899	820	431	1177	1310
7K	8728	—	1047	—	1948	—	3963	—	475	—	884	—
7L	8959	—	1132	—	2094	—	4067	—	514	—	951	—
7M	9161	—	1214	—	2229	—	4159	—	551	—	1012	—
7P	8792	—	1002	—	2010	—	3992	—	455	—	913	—
7Q	9023	—	1087	—	2156	—	4096	—	493	—	979	—
7R	9229	—	1167	—	2295	—	4190	—	530	—	1042	—
7T	9431	—	1194	—	2115	—	4282	—	542	—	960	—
7U	9698	—	1292	—	2282	—	4403	—	587	—	1036	—
7V	9932	—	1403	—	2436	—	4509	—	637	—	1106	—
7X	9510	—	1142	—	2185	—	4318	—	518	—	992	—
7Y	9777	—	1240	—	2352	—	4439	—	563	—	1068	—
7Z	10016	—	1347	—	2511	—	4547	—	612	—	1140	—
80	12664	12753	1700	836	2726	2977	5749	5790	772	380	1238	1352
81	12998	13149	1812	836	2863	3143	5901	5970	823	380	1300	1427
82	13347	13545	1928	836	3005	3309	6060	6149	875	380	1364	1502
83	13437	13872	1877	836	3053	3476	6100	6298	852	380	1386	1578
84	13523	14217	1840	836	3099	3651	6139	6455	835	380	1407	1658
85	13804	14008	1927	945	2951	3238	6267	6360	875	429	1340	1470
86	14191	14465	2054	945	3108	3428	6443	6567	933	429	1411	1556
87	14597	14923	2186	945	3271	3618	6627	6775	992	429	1485	1643
88	14705	15311	2142	945	3325	3608	6676	6951	972	429	1510	1638
89	14808	15721	2099	945	3378	4009	6723	7137	953	429	1534	1820
8K	11153	—	1385	—	2760	—	5063	—	629	—	1253	—
8L	11400	—	1484	—	2926	—	5176	—	674	—	1328	—
8M	11650	—	1589	—	3088	—	5289	—	721	—	1402	—
8P	11219	—	1334	—	2830	—	5093	—	606	—	1285	—
8Q	11470	—	1430	—	2999	—	5207	—	649	—	1362	—
8R	11719	—	1535	—	3161	—	5320	—	697	—	1435	—
8T	12069	—	1580	—	2991	—	5479	—	717	—	1358	—
8U	12357	—	1694	—	3180	—	5610	—	769	—	1444	—
8V	12645	—	1814	—	3365	—	5741	—	824	—	1528	—
8X	12152	—	1522	—	3070	—	5517	—	691	—	1394	—
8Y	12444	—	1632	—	3264	—	5650	—	741	—	1482	—
8Z	12733	—	1752	—	3448	—	5781	—	795	—	1565	—

*Rigging weights are for standard tubes of standard wall thickness (0.025-in. [0.635 mm] wall).

NOTES:
1. Cooler includes the control panel (ICVC), suction elbow, and 1/2 the distribution piping weight.
2. Condenser includes float valve and sump, discharge elbow, and 1/2 the distribution piping weight.
3. For special tubes refer to the 19XR,XRV Computer Selection Program.
4. All weights for standard 2-pass NIH (nozzle-in-head) design.

Table 6B — 19XR Heat Exchanger Data — Compressor End Entering Cooler Water

Code†	English						Metric (SI)					
	Dry Rigging Weight (lb)*		Machine Charge				Dry Rigging Weight (kg)*		Machine Charge			
	Cooler Only	Condenser Only	Refrigerant Weight (lb)		Water Weight (lb)		Cooler Only	Condenser Only	Refrigerant Weight (kg)		Water Weight (kg)	
			Cooler	Condenser	Cooler	Condenser			Cooler	Condenser	Cooler	Condenser
10	2707	2704	290	200	283	348	1228	1227	132	91	128	158
11	2777	2772	310	200	309	374	1260	1257	141	91	140	170
12	2848	2857	330	200	335	407	1292	1296	150	91	152	185
15	2968	2984	320	250	327	402	1346	1354	145	113	148	182
16	3054	3068	340	250	359	435	1385	1392	154	113	163	197
17	3141	3173	370	250	391	475	1425	1439	168	113	177	215
20	3407	3373	345	225	402	398	1545	1530	156	102	182	181
21	3555	3540	385	225	456	462	1613	1606	175	102	207	210
22	3711	3704	435	225	514	526	1683	1680	197	102	233	239
30	4071	3694	350	260	464	464	1847	1676	159	118	210	210
31	4253	3899	420	260	531	543	1929	1769	191	118	241	246
32	4445	4100	490	260	601	621	2016	1860	222	118	273	282
35	4343	4606	400	310	511	513	1970	2089	181	141	232	233
36	4551	4840	480	310	587	603	2064	2195	218	141	266	274
37	4769	5069	550	310	667	692	2163	2299	249	141	303	314
40	4908	5039	560	338	863	915	2226	2286	254	153	391	415
41	5078	5232	630	338	930	995	2303	2373	286	153	422	451
42	5226	5424	690	338	990	1074	2370	2460	313	153	449	487
45	5363	5602	640	383	938	998	2433	2541	290	174	425	453
46	5559	5824	720	383	1014	1088	2522	2642	327	174	460	494
47	5730	6044	790	383	1083	1179	2599	2742	358	174	491	535
50	5713	6090	750	446	1101	1225	2591	2762	340	202	499	556
51	5940	6283	840	446	1192	1304	2694	2850	381	202	541	591
52	6083	6464	900	446	1248	1379	2759	2932	408	202	566	626
53	6141	6529	900	446	1277	1409	2788	2964	408	202	580	640
54	6192	6591	900	446	1302	1439	2811	2992	408	202	591	653
55	6257	6785	870	509	1201	1339	2838	3078	395	231	545	607
56	6517	7007	940	509	1304	1429	2956	3178	426	231	591	648
57	6682	7215	980	509	1369	1514	3031	3273	445	231	621	687
58	6751	7291	980	509	1401	1550	3065	3310	445	231	636	704
59	6811	7363	980	509	1430	1583	3092	3343	445	231	649	719
5A	5124	—	500	—	1023	—	2324	—	227	—	464	—
5B	5177	—	520	—	1050	—	2348	—	236	—	476	—
5C	5243	—	550	—	1079	—	2378	—	249	—	489	—
5F	5577	—	550	—	1113	—	2530	—	249	—	505	—
5G	5640	—	570	—	1143	—	2558	—	259	—	518	—
5H	5716	—	600	—	1176	—	2593	—	272	—	533	—
5K	4993	—	673	—	1067	—	2267	—	306	—	484	—
5L	5090	—	706	—	1118	—	2311	—	321	—	508	—
5M	5165	—	742	—	1162	—	2345	—	337	—	528	—
5P	5041	—	641	—	1111	—	2289	—	291	—	504	—
5Q	5131	—	678	—	1155	—	2329	—	308	—	524	—
5R	5214	—	709	—	1206	—	2367	—	322	—	548	—
5T	5425	—	768	—	1162	—	2463	—	349	—	528	—
5U	5534	—	801	—	1220	—	2512	—	364	—	554	—
5V	5620	—	843	—	1270	—	2551	—	383	—	577	—
5X	5484	—	730	—	1212	—	2490	—	331	—	550	—
5Y	5584	—	769	—	1262	—	2535	—	349	—	573	—
5Z	5678	—	805	—	1320	—	2578	—	365	—	599	—
60	6719	6764	940	479	1400	1521	3048	3068	426	217	635	690
61	6895	6949	980	479	1470	1597	3128	3152	445	217	667	724
62	7038	7130	1020	479	1527	1671	3192	3234	463	217	693	758
63	7103	7199	1020	479	1559	1704	3225	3268	463	217	708	773
64	7161	7264	1020	479	1587	1735	3251	3298	463	217	720	788
65	7392	7682	1020	542	1530	1667	3353	3484	463	246	694	756
66	7594	7894	1060	542	1610	1753	3445	3581	481	246	730	795
67	7759	8102	1090	542	1674	1838	3519	3675	494	246	759	834
68	7836	8182	1090	542	1711	1875	3558	3715	494	246	777	851
69	7905	8258	1090	542	1743	1911	3589	3749	494	246	791	868

*Rigging weights are for standard tubes of standard wall thickness (0.025-in. [0.635 mm] wall).

NOTES:
1. Cooler includes the control panel (ICVC), suction elbow, and 1/2 the distribution piping weight.
2. Condenser includes float valve and sump, discharge elbow, and 1/2 the distribution piping weight.
3. For special tubes refer to the 19XR,XRV Computer Selection Program.
4. All weights for standard 2-pass NIH (nozzle-in-head) design.

Table 6B — 19XR Heat Exchanger Data — Compressor End Entering Cooler Water (cont)

CODE	ENGLISH						METRIC (SI)					
	Dry Rigging Weight (lb)*		Machine Charge				Dry Rigging Weight (kg)*		Machine Charge			
	Cooler Only	Condenser Only	Refrigerant Weight (lb)		Water Weight (lb)		Cooler Only	Condenser Only	Refrigerant Weight (kg)		Water Weight (kg)	
			Cooler	Condenser	Cooler	Condenser			Cooler	Condenser	Cooler	Condenser
6K	5716	—	760	—	1291	—	2595	—	345	—	586	—
6L	5804	—	797	—	1341	—	2635	—	362	—	609	—
6M	5894	—	828	—	1399	—	2676	—	376	—	635	—
6P	5768	—	725	—	1338	—	2619	—	329	—	607	—
6Q	5852	—	764	—	1385	—	2657	—	347	—	629	—
6R	5938	—	798	—	1439	—	2696	—	362	—	653	—
6T	6230	—	863	—	1405	—	2828	—	392	—	638	—
6U	6330	—	905	—	1462	—	2874	—	411	—	664	—
6V	6433	—	941	—	1528	—	2921	—	427	—	694	—
6X	6293	—	823	—	1459	—	2857	—	374	—	662	—
6Y	6388	—	868	—	1512	—	2900	—	394	—	686	—
6Z	6487	—	906	—	1574	—	2945	—	411	—	715	—
70	9942	10786	1220	840	2008	2225	4510	4893	553	381	911	1009
71	10330	11211	1340	840	2164	2389	4686	5085	608	381	982	1084
72	10632	11622	1440	840	2286	2548	4823	5278	653	381	1037	1156
73	10715	11737	1440	840	2328	2604	4865	5329	654	381	1057	1182
74	10790	11775	1440	840	2366	2622	4899	5346	654	381	1074	1190
75	10840	11859	1365	950	2183	2431	4917	5379	619	431	990	1103
76	11289	12345	1505	950	2361	2619	5121	5600	683	431	1071	1188
77	11638	12814	1625	950	2501	2801	5279	5812	737	431	1134	1271
78	11738	12949	1625	950	2548	2864	5329	5879	738	431	1157	1300
79	11828	12994	1625	950	2592	2885	5370	5899	738	431	1177	1310
7K	8728	—	1047	—	1948	—	3963	—	475	—	884	—
7L	8959	—	1132	—	2094	—	4067	—	514	—	951	—
7M	9161	—	1214	—	2229	—	4159	—	551	—	1012	—
7P	8792	—	1002	—	2010	—	3992	—	455	—	913	—
7Q	9023	—	1087	—	2156	—	4096	—	493	—	979	—
7R	9229	—	1167	—	2295	—	4190	—	530	—	1042	—
7T	9431	—	1194	—	2115	—	4282	—	542	—	960	—
7U	9698	—	1292	—	2282	—	4403	—	587	—	1036	—
7V	9932	—	1403	—	2436	—	4509	—	637	—	1106	—
7X	9510	—	1142	—	2185	—	4318	—	518	—	992	—
7Y	9777	—	1240	—	2352	—	4439	—	563	—	1068	—
7Z	10016	—	1347	—	2511	—	4547	—	612	—	1140	—
80	12664	12753	1500	836	2726	2977	5744	5785	680	379	1236	1350
81	12998	13149	1620	836	2863	3143	5896	5964	735	379	1299	1426
82	13347	13545	1730	836	3005	3309	6054	6144	785	379	1363	1501
83	13437	13872	1730	836	3053	3476	6100	6298	785	379	1386	1578
84	13523	14217	1730	836	3099	3651	6139	6455	785	379	1407	1658
85	13804	14008	1690	945	2951	3238	6261	6354	767	429	1339	1469
86	14191	14465	1820	945	3108	3428	6437	6561	826	429	1410	1555
87	14597	14923	1940	945	3271	3618	6621	6769	880	429	1484	1641
88	14705	15311	1940	945	3325	3808	6676	6951	881	429	1510	1729
89	14808	15721	1940	945	3378	4009	6723	7137	881	429	1534	1820
8K	11153	—	1385	—	2760	—	5063	—	629	—	1253	—
8L	11400	—	1484	—	2926	—	5176	—	674	—	1328	—
8M	11650	—	1589	—	3088	—	5289	—	721	—	1402	—
8P	11219	—	1334	—	2830	—	5093	—	606	—	1285	—
8Q	11470	—	1430	—	2999	—	5207	—	649	—	1362	—
8R	11719	—	1535	—	3161	—	5320	—	697	—	1435	—
8T	12069	—	1580	—	2991	—	5479	—	717	—	1358	—
8U	12357	—	1694	—	3180	—	5610	—	769	—	1444	—
8V	12645	—	1814	—	3365	—	5741	—	824	—	1528	—
8X	12152	—	1522	—	3070	—	5517	—	691	—	1394	—
8Y	12444	—	1632	—	3264	—	5650	—	741	—	1482	—
8Z	12733	—	1752	—	3448	—	5781	—	795	—	1565	—

*Rigging weights are for standard tubes of standard wall thickness (0.025-in. [0.635 mm] wall).

NOTES:

1. Cooler includes the control panel (ICVC), suction elbow, and 1/2 the distribution piping weight.
2. Condenser includes float valve and sump, discharge elbow, and 1/2 the distribution piping weight.
3. For special tubes refer to the 19XR,XRV Computer Selection Program.
4. All weights for standard 2-pass NIH (nozzle-in-head) design.

Table 7 — 19XR Additional Data for Marine Waterboxes*

HEAT EXCHANGER FRAME, PASS	ENGLISH					SI				
	psig	Rigging Weight (lb)		Water Volume (gal)		kPa	Rigging Weight (kg)		Water Volume (L)	
		Cooler	Condenser	Cooler	Condenser		Cooler	Condenser	Cooler	Condenser
FRAME 2, 1 AND 3 PASS	150	730	—	84	—	1034	331	—	318	—
FRAME 2, 2 PASS		365	365	42	42		166	166	159	159
FRAME 3, 1 AND 3 PASS		730	—	84	—		331	—	318	—
FRAME 3, 2 PASS		365	365	42	42		166	166	159	159
FRAME 4, 1 AND 3 PASS		1888	—	109	—		856	—	412	—
FRAME 4, 2 PASS		944	989	54	54		428	449	205	205
FRAME 5, 1 AND 3 PASS		2445	—	122	—		1109	—	462	—
FRAME 5, 2 PASS		1223	1195	61	60		555	542	231	226
FRAME 6, 1 AND 3 PASS		2860	—	139	—		1297	—	524	—
FRAME 6, 2 PASS		1430	1443	69	69		649	655	262	262
FRAME 7, 1 AND 3 PASS		3970	—	309	—		1801	—	1170	—
FRAME 7, 2 PASS		1720	1561	155	123		780	708	585	465
FRAME 8, 1 AND 3 PASS		5048	—	364	—		2290	—	1376	—
FRAME 8, 2 PASS		2182	1751	182	141		990	794	688	532
FRAME 2, 1 AND 3 PASS	300	860	—	84	—	2068	390	—	318	—
FRAME 2, 2 PASS		430	430	42	42		195	195	159	159
FRAME 3, 1 AND 3 PASS		860	—	84	—		390	—	318	—
FRAME 3, 2 PASS		430	430	42	42		195	195	159	159
FRAME 4, 1 AND 3 PASS		2162	—	109	—		981	—	412	—
FRAME 4, 2 PASS		1552	1641	47	47		704	744	178	178
FRAME 5, 1 AND 3 PASS		2655	—	122	—		1204	—	462	—
FRAME 5, 2 PASS		1965	1909	53	50		891	866	199	190
FRAME 6, 1 AND 3 PASS		3330	—	139	—		1510	—	524	—
FRAME 6, 2 PASS		2425	2451	58	58		1100	1112	218	218
FRAME 7, 1 AND 3 PASS		5294	—	309	—		2401	—	1170	—
FRAME 7, 2 PASS		4140	4652	146	94		1878	2110	553	356
FRAME 8, 1 AND 3 PASS		6222	—	364	—		2822	—	1376	—
FRAME 8, 2 PASS		4952	4559	161	94		2246	2068	609	355

*Add to heat exchanger data for total weights or volumes.

NOTE: For the total weight of a vessel with a marine waterbox, add these values to the heat exchanger weights (or volumes).

Table 8A — 19XR Waterbox Cover Weights — English (lb)

WATERBOX DESCRIPTION	COOLER					
	Frame 1		Frame 2		Frame 3	
	Standard Nozzles	Flanged	Standard Nozzles	Flanged	Standard Nozzles	Flanged
NIH, 1 Pass Cover, 150 psig	177	204	287	318	287	318
NIH, 2 Pass Cover, 150 psig	185	218	287	340	287	340
NIH, 3 Pass Cover, 150 psig	180	196	294	310	294	310
MWB End Cover, 150 psig	—	—	315	315	315	315
NIH/MWB Return Cover, 150 psig	136	136	243	243	243	243
NIH, 1 Pass Cover, 300 psig	248	301	411	486	411	486
NIH, 2 Pass Cover, 300 psig	255	324	411	518	411	518
NIH, 3 Pass Cover, 300 psig	253	288	433	468	433	468
NIH Plain End Cover, 300 psig	175	175	291	291	291	291
MWB End Cover, 300 psig	—	—	619	619	619	619
MWB Return Cover, 300 psig	—	—	445	445	445	445

WATERBOX DESCRIPTION	CONDENSER					
	Frame 1		Frame 2		Frame 3	
	Standard Nozzles	Flanged	Standard Nozzles	Flanged	Standard Nozzles	Flanged
NIH, 1 Pass Cover, 150 psig	177	204	260	297	260	297
NIH, 2 Pass Cover, 150 psig	185	218	265	318	265	318
NIH, 3 Pass Cover, 150 psig	180	196	272	288	272	288
MWB End Cover, 150 psig	—	—	234	234	234	234
NIH/MWB Return Cover, 150 psig	136	136	225	225	225	225
NIH, 1 Pass Cover, 300 psig	248	301	379	454	379	454
NIH, 2 Pass Cover, 300 psig	255	324	379	486	379	486
NIH, 3 Pass Cover, 300 psig	253	288	401	436	401	436
NIH Plain End Cover, 300 psig	175	175	270	270	270	270
MWB End Cover, 300 psig	—	—	474	474	474	474
MWB Return Cover, 300 psig	—	—	359	359	359	359

LEGEND
NIH — Nozzle-in-Head
MWB — Marine Waterbox

NOTE: Weight for NIH 2-pass cover, 150 psig, is included in the heat exchanger weights shown in Tables 6A and 6B.

Table 8A — 19XR Waterbox Cover Weights — English (lb) (cont)

WATERBOX DESCRIPTION	COOLER					
	Frame 4		Frame 5		Frame 6	
	Standard Nozzles	Flanged	Standard Nozzles	Flanged	Standard Nozzles	Flanged
NIH, 1 Pass Cover, 150 psig	148	185	168	229	187	223
NIH, 2 Pass Cover, 150 psig	202	256	224	276	257	330
NIH, 3 Pass Cover, 150 psig	473	489	617	634	765	791
MWB End Cover, 150 psig	317	317	393	393	487	487
MWB Return Cover, 150 psig	138	138	154	154	172	172
NIH, 1 Pass Cover, 300 psig	633	709	764	839	978	1053
NIH, 2 Pass Cover, 300 psig	626	689	761	867	927	1078
NIH, 3 Pass Cover, 300 psig	660	694	795	830	997	1050
NIH/MWB End Cover, 300 psig	522	522	658	658	834	834

WATERBOX DESCRIPTION	CONDENSER					
	Frame 4		Frame 5		Frame 6	
	Standard Nozzles	Flanged	Standard Nozzles	Flanged	Standard Nozzles	Flanged
NIH, 1 Pass Cover, 150 psig	148	185	168	229	187	223
NIH, 2 Pass Cover, 150 psig	191	245	224	298	245	330
NIH, 3 Pass Cover, 150 psig	503	519	629	655	772	843
MWB End Cover and Bolt-on End Cover, 150 psig	317	317	393	393	487	487
NIH/MWB Return Cover, 150 psig	138	138	154	154	172	172
NIH, 1 Pass Cover, 300 psig	633	709	764	839	978	1053
NIH, 2 Pass Cover, 300 psig	622	729	727	878	923	1074
NIH, 3 Pass Cover, 300 psig	655	689	785	838	995	1049
NIH/MWB End Cover, 300 psig	522	522	658	658	834	834

LEGEND

NIH — Nozzle-in-Head
MWB — Marine Waterbox

NOTE: Weight for NIH 2-pass cover, 150 psig, is included in the heat exchanger weights shown in Tables 6A and 6B.

Table 8A — 19XR Waterbox Cover Weights — English (lb) (cont)

WATERBOX DESCRIPTION	COOLER			
	Frame 7		Frame 8	
	Standard Nozzles	Flanged	Standard Nozzles	Flanged
NIH, 1 Pass Cover, 150 psig	329	441	417	494
NIH, 2 Pass Cover, 150 psig	426	541	540	693
NIH, 3 Pass Cover, 150 psig	1250	1291	1629	1687
MWB End Cover, 150 psig	844	844	1125	1125
NIH/MWB Return Cover, 150 psig	315	315	404	404
NIH, 1 Pass Cover, 300 psig	1712	1883	2359	2523
NIH, 2 Pass Cover, 300 psig	1662	1908	2369	2599
NIH, 3 Pass Cover, 300 psig	1724	1807	2353	2516
NIH/MWB End Cover, 300 psig	1378	1378	1951	1951

WATERBOX DESCRIPTION	CONDENSER			
	Frame 7		Frame 8	
	Standard Nozzles	Flanged	Standard Nozzles	Flanged
NIH, 1 Pass Cover, 150 psig	329	441	417	494
NIH, 2 Pass Cover, 150 psig	404	520	508	662
NIH, 3 Pass Cover, 150 psig	1222	1280	1469	1527
MWB End Cover, 150 psig	781	781	1007	1007
Bolt-on MWB End Cover, 150 psig	700	700	1307	1307
NIH/MWB Return Cover, 150 psig	315	315	404	404
NIH, 1 Pass Cover, 300 psig	1690	1851	1986	2151
NIH, 2 Pass Cover, 300 psig	1628	1862	1893	2222
NIH, 3 Pass Cover, 300 psig	1714	1831	1993	2112
NIH/MWB End Cover, 300 psig	1276	1276	1675	1675

LEGEND

NIH — Nozzle-in-Head
MWB — Marine Waterbox

NOTE: Weight for NIH 2-pass cover, 150 psig, is included in the heat exchanger weights shown in Tables 6A and 6B.

Table 8B — 19XR Waterbox Cover Weights — SI (kg)

WATERBOX DESCRIPTION	COOLER					
	Frame 1		Frame 2		Frame 3	
	Standard Nozzles	Flanged	Standard Nozzles	Flanged	Standard Nozzles	Flanged
NIH, 1 Pass Cover, 1034 kPa	80	92	130	144	130	144
NIH, 2 Pass Cover, 1034 kPa	84	99	130	154	130	154
NIH, 3 Pass Cover, 1034 kPa	82	88	133	141	133	141
MWB End Cover, 1034 kPa	—	—	143	143	143	143
NIH/MWB Return Cover, 1034 kPa	62	62	110	110	110	110
NIH, 1 Pass Cover, 2068 kPa	112	137	186	220	186	220
NIH, 2 Pass Cover, 2068 kPa	116	147	186	235	186	235
NIH, 3 Pass Cover, 2068 kPa	115	131	196	212	196	212
NIH Plain End Cover, 2068 kPa	79	79	132	132	132	132
MWB End Cover, 2068 kPa	—	—	281	281	281	281
MWB Return Cover, 2068 kPa	—	—	202	202	202	202

WATERBOX DESCRIPTION	CONDENSER					
	Frame 1		Frame 2		Frame 3	
	Standard Nozzles	Flanged	Standard Nozzles	Flanged	Standard Nozzles	Flanged
NIH, 1 Pass Cover, 1034 kPa	80	92	118	135	118	135
NIH, 2 Pass Cover, 1034 kPa	84	99	120	144	120	144
NIH, 3 Pass Cover, 1034 kPa	82	88	123	131	123	131
MWB End Cover, 1034 kPa	—	—	106	106	106	106
NIH/MWB Return Cover, 1034 kPa	62	62	102	102	102	102
NIH, 1 Pass Cover, 2068 kPa	112	137	172	206	172	206
NIH, 2 Pass Cover, 2068 kPa	116	147	172	220	172	220
NIH, 3 Pass Cover, 2068 kPa	115	131	182	198	182	198
NIH Plain End Cover, 2068 kPa	79	79	122	122	122	122
MWB End Cover, 2068 kPa	—	—	215	215	215	215
MWB Return Cover, 2068 kPa	—	—	163	163	163	163

LEGEND

NIH — Nozzle-in-Head
MWB — Marine Waterbox

NOTE: Weight for NIH 2-pass cover, 1034 kPa, is included in the heat exchanger weights shown in Tables 6A and 6B.

Table 8B — 19XR Waterbox Cover Weights — SI (kg) (cont)

WATERBOX DESCRIPTION	COOLER					
	Frame 4		Frame 5		Frame 6	
	Standard Nozzles	Flanged	Standard Nozzles	Flanged	Standard Nozzles	Flanged
NIH, 1 Pass Cover, 1034 kPa	67	84	76	104	85	101
NIH, 2 Pass Cover, 1034 kPa	92	116	102	125	117	150
NIH, 3 Pass Cover, 1034 kPa	215	222	280	288	347	359
MWB End Cover, 1034 kPa	144	144	178	178	221	221
NIH/MWB Return Cover, 1034 kPa	63	63	70	70	78	78
NIH, 1 Pass Cover, 2068 kPa	287	322	347	381	444	478
NIH, 2 Pass Cover, 2068 kPa	284	313	345	394	420	489
NIH, 3 Pass Cover, 2068 kPa	299	315	361	376	452	476
NIH/MWB End Cover, 2068 kPa	237	237	298	298	378	378

WATERBOX DESCRIPTION	CONDENSER					
	Frame 4		Frame 5		Frame 6	
	Standard Nozzles	Flanged	Standard Nozzles	Flanged	Standard Nozzles	Flanged
NIH, 1 Pass Cover, 1034 kPa	67	84	76	104	85	101
NIH, 2 Pass Cover, 1034 kPa	87	111	102	135	111	150
NIH, 3 Pass Cover, 1034 kPa	228	235	285	297	350	382
MWB End Cover and Bolt-on End Cover, 1034 kPa	144	144	178	178	221	221
NIH/MWB Return Cover, 1034 kPa	63	63	70	70	78	78
NIH, 1 Pass Cover, 2068 kPa	287	322	347	381	444	478
NIH, 2 Pass Cover, 2068 kPa	282	331	330	393	419	487
NIH, 3 Pass Cover, 2068 kPa	297	313	356	376	451	476
NIH/MWB End Cover, 2068 kPa	237	237	298	298	378	378

LEGEND
NIH — Nozzle-in-Head
MWB — Marine Waterbox

NOTE: Weight for NIH 2-pass cover, 1034 kPa, is included in the heat exchanger weights shown in Tables 6A and 6B.

Table 8B — 19XR Waterbox Cover Weights — SI (kg) (cont)

WATERBOX DESCRIPTION	COOLER			
	Frame 7		Frame 8	
	Standard Nozzles	Flanged	Standard Nozzles	Flanged
NIH, 1 Pass Cover, 1034 kPa	149	200	189	224
NIH, 2 Pass Cover, 1034 kPa	193	245	245	314
NIH, 3 Pass Cover, 1034 kPa	567	586	739	765
MWB End Cover, 1034 kPa	383	383	510	510
NIH/MWB Return Cover, 1034 kPa	143	143	183	183
NIH, 1 Pass Cover, 2068 kPa	777	854	1070	1144
NIH, 2 Pass Cover, 2068 kPa	754	865	1075	1179
NIH, 3 Pass Cover, 2068 kPa	782	820	1067	1141
NIH/MWB End Cover, 2068 kPa	625	625	885	885

WATERBOX DESCRIPTION	CONDENSER			
	Frame 7		Frame 8	
	Standard Nozzles	Flanged	Standard Nozzles	Flanged
NIH, 1 Pass Cover, 1034 kPa	149	200	189	224
NIH, 2 Pass Cover, 1034 kPa	183	236	230	300
NIH, 3 Pass Cover, 1034 kPa	554	580	666	693
MWB End Cover, 1034 kPa	354	354	457	457
Bolt-on MWB End Cover, 1034 kPa	318	318	593	593
NIH/MWB Return Cover, 1034 kPa	143	143	183	183
NIH, 1 Pass Cover, 2068 kPa	767	840	901	976
NIH, 2 Pass Cover, 2068 kPa	738	845	859	1008
NIH, 3 Pass Cover, 2068 kPa	777	831	904	958
NIH/MWB End Cover, 2068 kPa	579	579	760	760

LEGEND
NIH — Nozzle-in-Head
MWB — Marine Waterbox

NOTE: Weight for NIH 2-pass cover, 1034 kPa, is included in the heat exchanger weights shown in Tables 6A and 6B.

RIG MACHINE COMPONENTS — Refer to instructions below, Fig. 8-11, and Carrier Certified Prints for machine component disassembly.

IMPORTANT: Only a qualified service technician should perform this operation.

⚠ WARNING

Do not attempt to disconnect flanges while the machine is under pressure. Failure to relieve pressure can result in personal injury or damage to the unit.

⚠ CAUTION

Before rigging the compressor, disconnect all wires entering the power panel to avoid unit damage.

NOTE: If the cooler and condenser vessels must be separated, the heat exchangers should be kept level by placing a support plate under the tube sheets. The support plate will also help to keep the vessels level and aligned when the vessels are bolted back together.

NOTE: Wiring must also be disconnected. Label each wire before removal (see Carrier Certified Prints). In order to disconnect the starter from the machine, remove wiring for the oil pump, oil heater, control wiring at the power panel, and the main motor leads at the starter lugs.

Remove all transducer and sensor wires at the sensor. Clip all wire ties necessary to pull heat exchangers apart.

To Separate Cooler and Condenser:

1. Place a support plate under each tube sheet to keep each vessel level (Fig. 8, Item 6).
2. Cut the refrigerant motor cooling line at the location shown (Fig. 8, Item 7).
3. Disconnect the compressor discharge elbow at the compressor (Fig. 9, Item 6).
4. Cut the hot gas bypass line at the location shown (Fig. 8, Item 1).
5. Unbolt the cooler liquid feed line at the location shown (Fig. 8, Item 10).
6. Cover all openings.
7. Disconnect all wires and cables that cross from the cooler side of the machine to the condenser side, including:
   a. temperature sensor cable at the waterbox (Fig. 10, Item 5)
   b. water-side transducer cables at the transducer (Fig. 10, Item 4)

c. condenser transducer cable at the transducer (Fig. 10, Item 7)

d. motor power wires at the starter (Fig. 8, Item 4)

e. wires and cable housings at the power panel that cross from the starter to the power panel (Fig. 9, Item 2).

8. Disconnect the rabbet-fit connectors on the tube sheets (Fig. 8, Item 5).
9. Rig the vessels apart.

To Separate the Compressor from the Cooler:

1. Unbolt the compressor suction elbow at the cooler flange (Fig. 8, Item 2).
2. Cut the refrigerant motor cooling line at the location shown (Fig. 8, Item 7).
3. Disconnect the motor refrigerant return line (Fig. 8, Item 8).
4. Disconnect the following:

a. compressor oil sump temperature sensor cable (Fig. 11, Item 4)

b. bearing temperature sensor cable (Fig. 11, Item 2)

c. motor temperature sensor cable (Fig. 11, Item 1)

d. wires and cable housings that cross from the power panel to the starter and control panel (Fig. 9, Item 2)

e. discharge temperature sensor cable (Fig. 11, Item 6)

f. compressor oil sump pressure cable (Fig. 11, Item 3)

g. compressor oil discharge pressure cable (Fig. 11, Item 5)

h. guide vane actuator cable (Fig. 9, Item 1)

i. diffuser actuator cable (Frame 5 compressor and Frame 4 units with split ring diffuser) — split ring diffuser not shown (Fig. 10, Item 2)

j. diffuser pressure cable (Frame 5 compressor and Frame 4 units with split ring diffuser) (Fig. 11, Item 8).

5. Disconnect the flared fitting for the oil reclaim line (Fig. 8, Item 3).
6. Unbolt the compressor discharge elbow (Fig. 9, Item 6).
7. Cover all openings.
8. Disconnect motor power cables at the starter lugs (Fig. 8, Item 4).
9. Unbolt the compressor mounting from the cooler (Fig. 8, Item 9).

To Rig Compressor:

NOTE: The motor end of the 19XR compressor is heavy and will tip backwards unless these directions are followed:

1. Cut two 4 in. x 6 in. wooden beams to the same length as the compressor.
2. Drill holes into the beams and bolt them to the base of the compressor.

Additional Notes

1. Use silicon grease on new O-rings when refitting.
2. Use gasket sealant on new gaskets when refitting.
3. Cooler and condenser vessels may be rigged vertically. Rigging should be fixed to all 4 corners of the tube sheet.

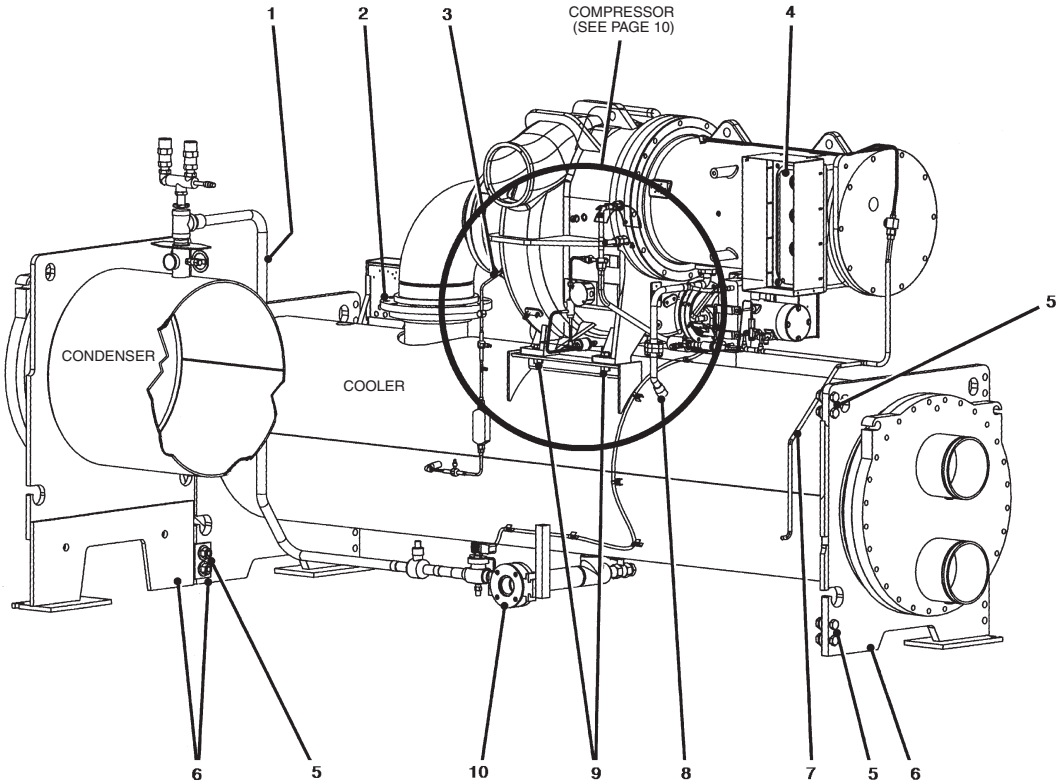

1 — Optional Hot Gas Bypass (Cut)
2 — Compressor Suction Elbow (Unbolt)
3 — Oil Reclaim Line (Unbolt)
4 — Starter Connector (Unbolt)
5 — Vessel Connectors (Unbolt)
6 — Tube Sheet
7 — Refrigerant Motor Cooling Line (Cut)
8 — Motor Drain (Unbolt)
9 — Compressor Mounting (Unbolt)
10 — Cooler Liquid Feed Line (Unbolt)

Fig. 8 — Cooler, Side View

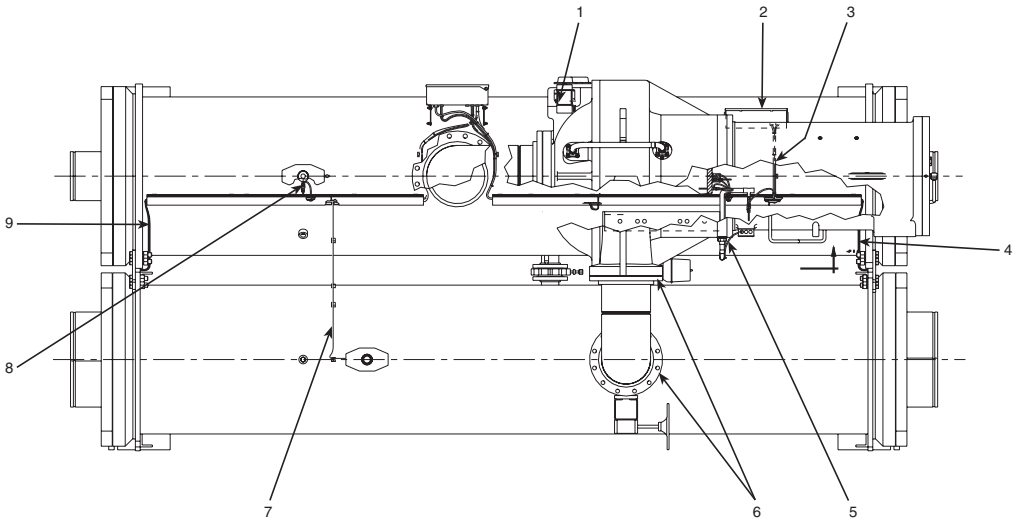

1 — Guide Vane Actuator Cable
2 — Power Panel
3 — Communication Cable
4 — Water Sensor Cables
5 — Motor Winding Temperature Cable
6 — Compressor Discharge Elbow Joints
7 — Condenser Pressure Cable
8 — Cooler Pressure Connection
9 — Water Sensor Cables

Fig. 9 — 19XR Chiller Top View

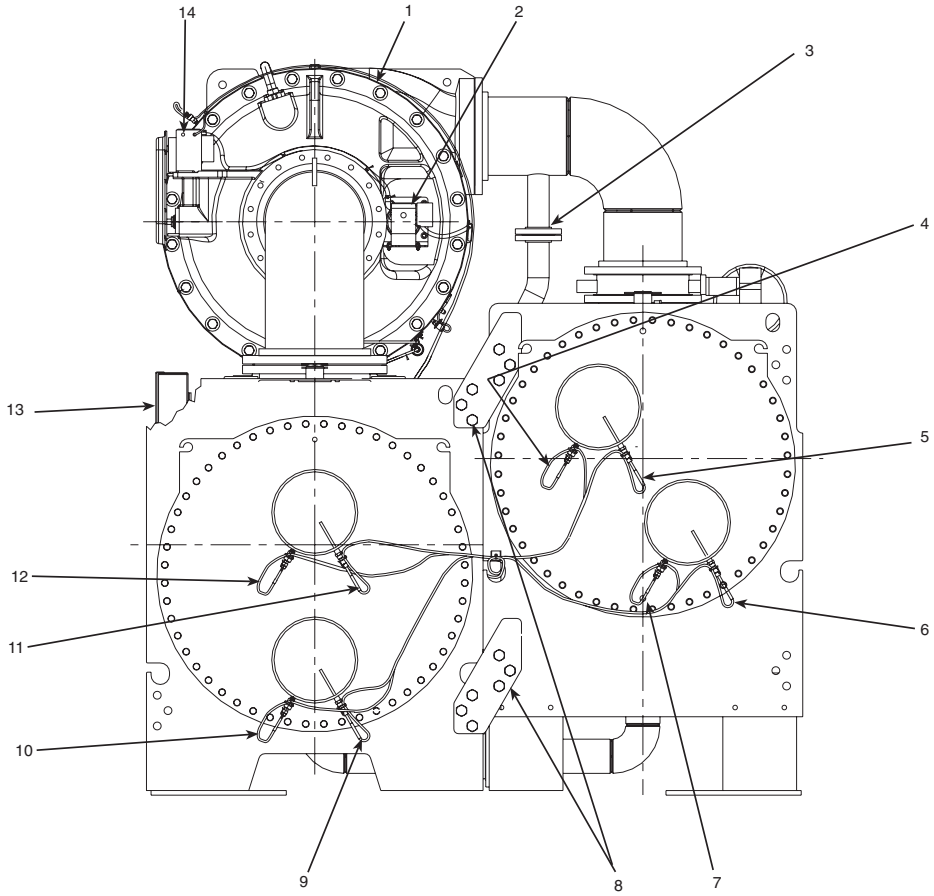

1 — Guide Vane Actuator Cables
2 — Diffuser Actuator (Frame 5 Compressor, Frame 4 Optional)
3 — Hot Gas Bypass Line (Optional)
4 — Condenser Leaving Water Pressure Cable (Optional for ICVC Units)
5 — Condenser Leaving Water Temperature Cable
6 — Condenser Entering Water Temperature Cable
7 — Condenser Entering Water Pressure Cable (Optional for ICVC Units)
8 — Vessel Take-Apart Connectors
9 — Cooler Entering Water Temperature Cable
10 — Cooler Entering Water Pressure Cable (Optional for ICVC Units)
11 — Cooler Leaving Water Temperature Cable
12 — Cooler Leaving Water Pressure Cable (Optional for ICVC Units)
13 — Chiller Visual Controller (CVC) or International Chiller Visual Controller (ICVC)
14 — Guide Vane Actuator

Fig. 10 — Chiller End View

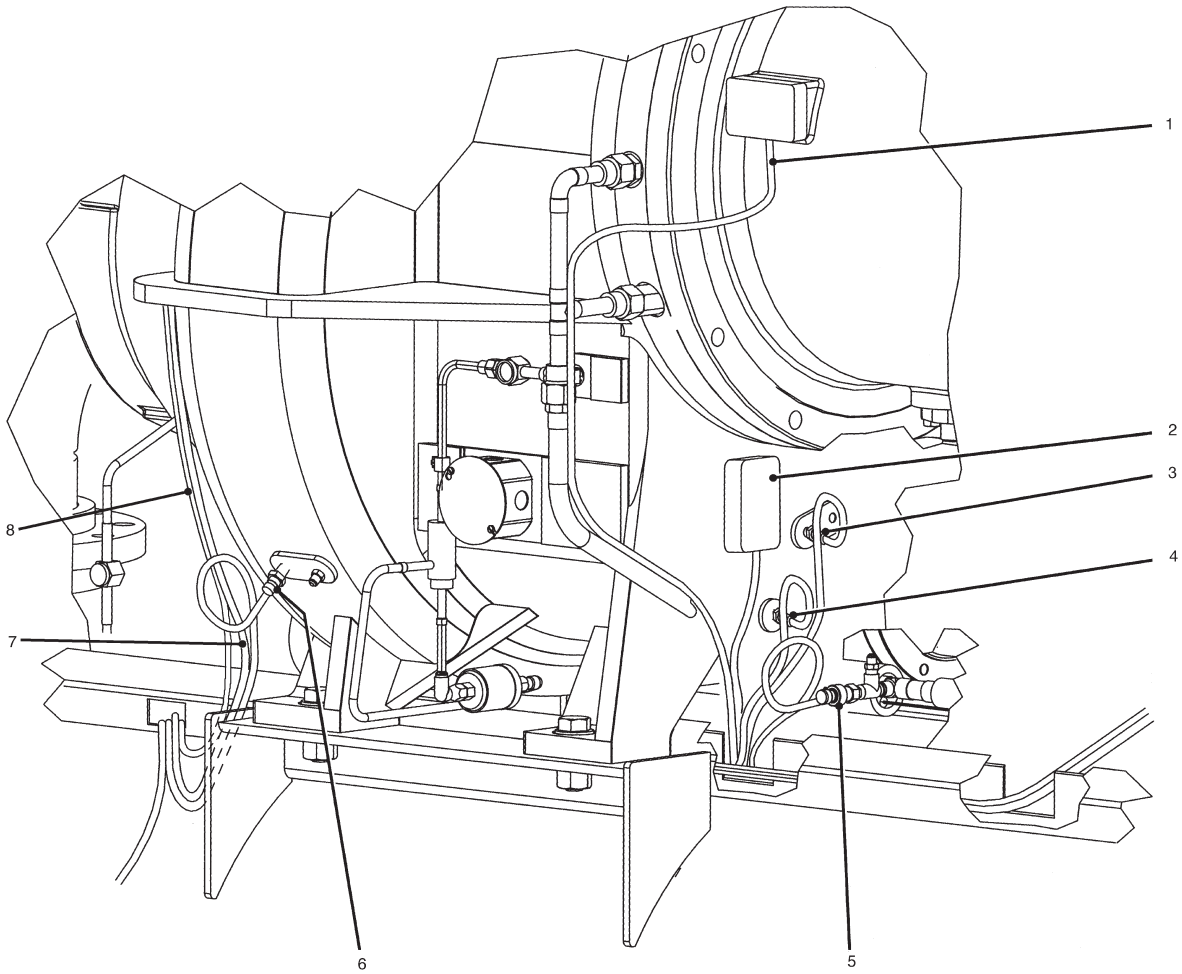

1 — Motor Temperature Sensor Cable
2 — Bearing Temperature Sensor Cable Connection (Inside Box)
3 — Compressor Oil Sump Pressure Cable
4 — Compressor Oil Sump Temperature Sensor Cable
5 — Compressor Oil Discharge Pressure Cable
6 — Discharge Temperature Sensor Cable
7 — Guide Vane Actuator Cable
8 — Diffuser Pressure and Actuator Cable (Frame 5 Compressor Only, Optional for Frame 4)

Fig. 11 — Compressor Detail

Step 3 — Install Machine Supports

INSTALL STANDARD ISOLATION — Figures 12 and 13 show the position of support plates and shear flex pads, which together form the standard machine support system.

> IMPORTANT: Chiller housekeeping pad, anchor bolts, and attachment points that are designed by others must be in accordance with all applicable national and local codes.

INSTALL ACCESSORY ISOLATION (if required) — Uneven floors or other considerations may dictate the use of accessory soleplates (supplied by Carrier for field installation) and leveling pads. Refer to Fig. 12 and 14.

Level machine by using jacking screws in isolation soleplates. Use a level at least 24-in. (600 mm) long.

For adequate and long lasting machine support, proper grout selection and placement is essential. Carrier recommends that only pre-mixed, epoxy type, non-shrinking grout be used for machine installation. Follow manufacturer's instructions in applying grout.

1. Check machine location prints for required grout thickness.
2. Carefully wax jacking screws for easy removal from grout.
3. Grout must extend above the base of the soleplate and there must be no voids in grout beneath the plates.
4. Allow grout to set and harden, per manufacturer's instructions, before starting machine.
5. Remove jacking screws from leveling pads after grout has hardened.

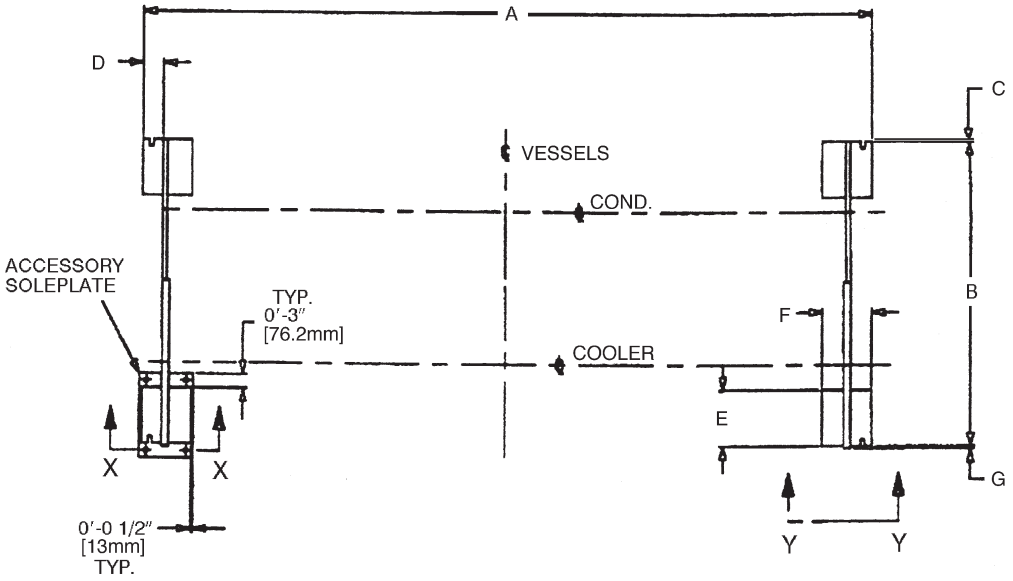

19XR,XRV HEAT EXCHANGER SIZE	DIMENSIONS													
	A		B		C		D		E		F		G	
	ft-in.	mm	ft-in.	mm	ft-in.	mm	ft-in.	mm	ft-in.	mm	ft-in.	mm	ft-in.	mm
10-12	10- 7 1/4	3232	4-10 1/4	1480	0-1	25	0-3 5/8	92	1-3 1/4	382	0-9	229	0-1/2	13
15-17	12-10 3/4	3931	4-10 1/4	1480	0-1	25	0-3 5/8	92	1-3 1/4	382	0-9	229	0-1/2	13
20-22	10- 7 1/4	3232	5- 4 1/4	1632	0-1	25	0-3 5/8	92	1-3 1/4	382	0-9	229	0-1/2	13
30-32	12-10 3/4	3931	5- 4 1/4	1632	0	0	0-3 5/8	92	1-3 1/4	382	0-9	229	0-1/2	13
35-37	14- 7 1/4	4451	5- 4 1/4	1632	0	0	0-3 5/8	92	1-3 1/4	382	0-9	229	0-1/2	13
40-42	12-10 3/4	3931	6- 0	1829	0-1 1/2	38	0-3 5/8	92	1-3 1/4	382	0-9	229	0-1/2	13
45-47	14- 7 1/4	4451	6- 0	1829	0-1 1/2	38	0-3 5/8	92	1-3 1/4	382	0-9	229	0-1/2	13
50-54, 5A-5C, 5K-5R	12-10 3/4	3931	6- 5 1/2	1968	0- 1/2	13	0-3 5/8	92	1-3 1/4	382	0-9	229	0-1/2	13
55-59, 5F-5H, 5T-5Z	14- 7 1/4	4451	6- 5 1/2	1968	0- 1/2	13	0-3 5/8	92	1-3 1/4	382	0-9	229	0-1/2	13
60-64, 6K-6R	12-10 3/4	3931	6- 9 1/2	2070	0- 1/2	13	0-3 5/8	92	1-3 1/4	382	0-9	229	0-1/2	13
65-69, 6T-6Z	14- 7 1/4	4451	6- 9 1/2	2070	0- 1/2	13	0-3 5/8	92	1-3 1/4	382	0-9	229	0-1/2	13
70-74, 7K-7R	15- 1 7/8	4620	7-10 1/2	2400	0- 1/4	6	0-6 15/16	176	1-10	559	1-4	406	0-3/4	19
75-79, 7T-7Z	17- 1 7/8	5229	7-10 1/2	2400	0- 1/4	6	0-6 15/16	176	1-10	559	1-4	406	0-3/4	19
80-84, 8K-8R	15- 1 7/8	4620	8- 9 3/4	2686	0-15/16	24	0-6 15/16	176	1-10	559	1-4	406	0-1/16	2
85-89, 8T-8Z	17- 1 7/8	5229	8- 9 3/4	2686	0-15/16	24	0-6 15/16	176	1-10	559	1-4	406	0-1/16	2

Fig. 12 — 19XR,XRV Machine Footprint

INSTALL SPRING ISOLATION — Spring isolation may be purchased as an accessory from Carrier for field installation. It may also be field supplied and installed. Spring isolators may be placed directly under machine support plates or located under machine soleplates. See Fig. 15. Consult job data for specific arrangement. Low profile spring isolation assemblies can be field supplied to keep the machine at a convenient working height.

Obtain specific details on spring mounting and machine weight distribution from job data. Also, check job data for methods to support and isolate pipes that are attached to spring isolated machines.

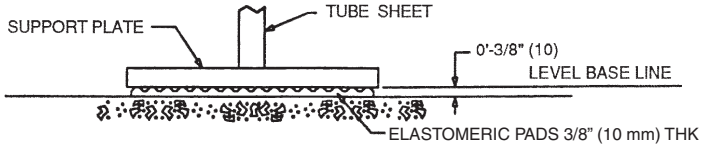

VIEW Y-Y

NOTES:
1. Dimensions in ( ) are in millimeters.
2. Isolation package includes 4 elastomeric pads.

Fig. 13 — Standard Isolation

SOLEPLATE DIMENSIONS
HEAT EXCHANGER FRAME SIZE
1 THROUGH 6

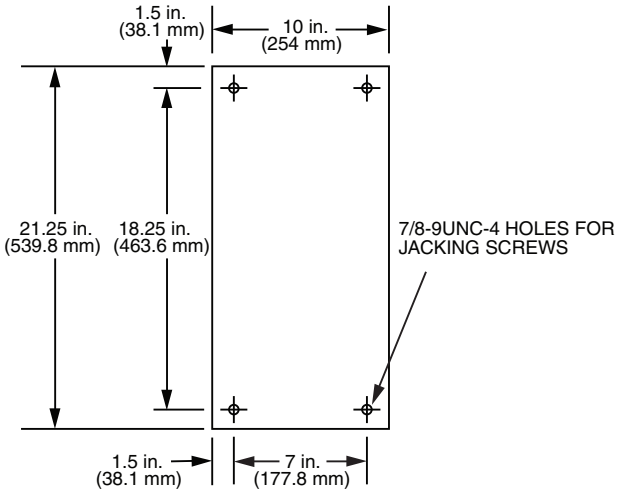

SOLEPLATE DIMENSIONS
HEAT EXCHANGER FRAME SIZE
7 AND 8

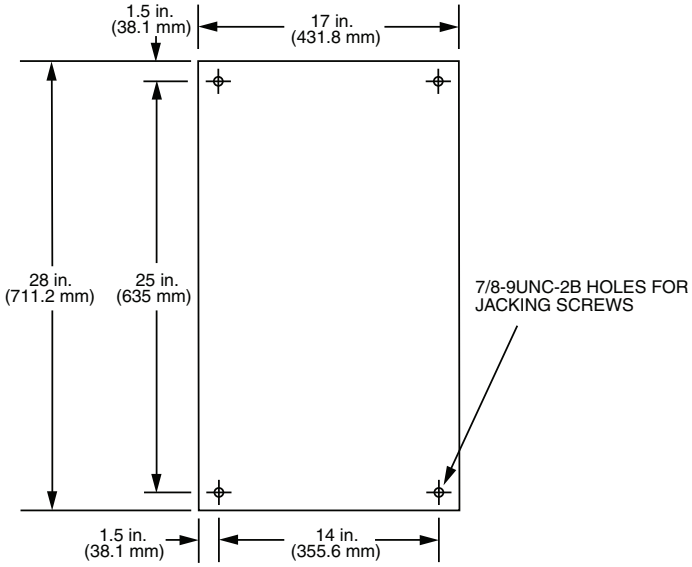

ACCESSORY SOLEPLATE DETAIL

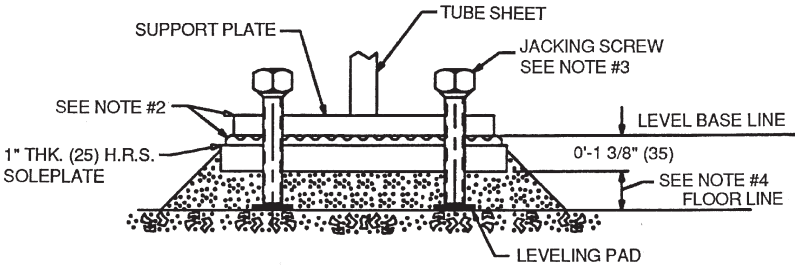

VIEW X-X

LEGEND

HRS — Hot Rolled Steel

NOTES:
1. Dimensions in ( ) are in millimeters.
2. Accessory (Carrier supplied, field installed) soleplate package includes 4 soleplates, 16 jacking screws and leveling pads.
3. Jacking screws to be removed after grout has set.
4. Thickness of grout will vary, depending on the amount necessary to level chiller. Use only pre-mixed non-shrinking grout, Ceilcote 748 or Chemrex Embeco 636 Plus Grout, 1½ in. (38.1 mm) to 2¼ in. (57.2 mm) thick.

Fig. 14 — Accessory Isolation

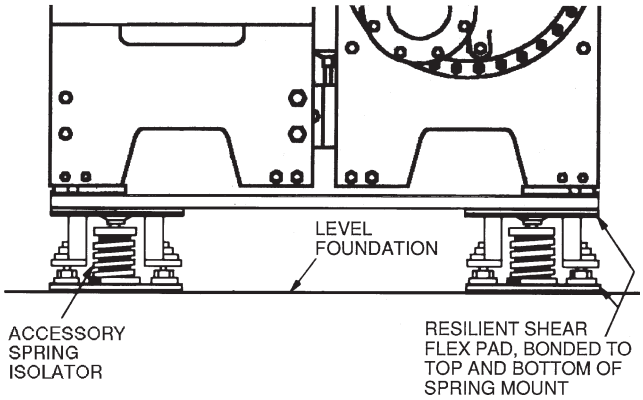

NOTE: The accessory spring isolators are supplied by Carrier for installation in the field.

Fig. 15 — 19XR Accessory Spring Isolation (Shown with Accessory Soleplates)

Step 4 — Connect Piping

INSTALL WATER PIPING TO HEAT EXCHANGERS — Refer to Table 9 for nozzle sizes. Install piping using job data, piping drawings, and procedures outlined below. A typical piping installation is shown in Fig. 16.

⚠ CAUTION

Factory-supplied insulation is not flammable but can be damaged by welding sparks and open flame. Protect insulation with a wet canvas cover.

⚠ CAUTION

To prevent damage to sensors, remove chilled and condenser water temperature sensors before welding connecting piping to water nozzles. Refer to Fig. 10. Replace sensors after welding is complete.

⚠ CAUTION

When flushing the water systems, isolate the chiller from the water circuits to prevent damage to the heat exchanger tubes.

1. Offset pipe flanges to permit removal of waterbox cover for maintenance and to provide clearance for pipe cleaning. No flanges are necessary with marine waterbox option; however, water piping should not cross in front of the waterbox or access will be blocked.
2. Provide openings in water piping for required pressure gages and thermometers. For thorough mixing and temperature stabilization, wells in the leaving water pipe should extend inside pipe at least 2 in. (50 mm).
3. Install air vents at all high points in piping to remove air and prevent water hammer.
4. Field-installed piping must be arranged and supported to avoid stress on the equipment and transmission of vibration from the equipment as well as to prevent interference with routine access for the reading, adjusting, and servicing of the equipment. Provisions should be made for adjusting the piping in each plane and for periodic and major servicing of the equipment.
5. Water flow direction must be as specified in Fig. 17-20.

   NOTE: Entering water is always the lower of the 2 nozzles. Leaving water is always the upper nozzle for cooler or condenser.
6. Install waterbox vent and drain piping in accordance with individual job data. All connections are $^3/_4$-in. FPT.
7. Install waterbox drain plugs in the unused waterbox drains and vent openings.
8. Install optional pumpout system or pumpout system and storage tank as shown in Fig. 21-24.
9. Isolation valves are recommended on the cooler and condenser piping to each chiller for service.

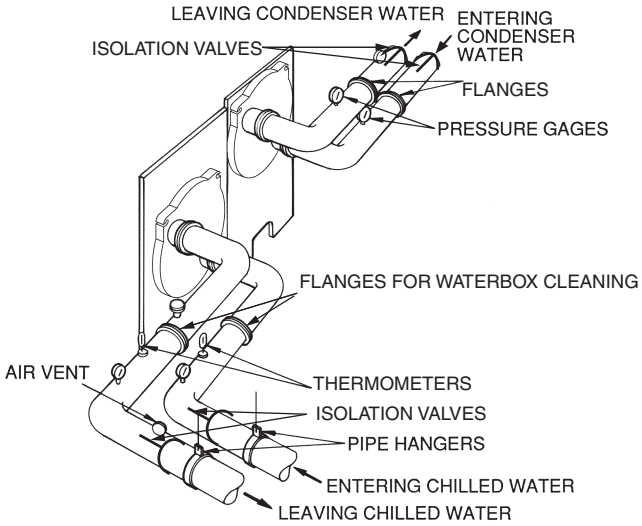

Fig. 16 — Typical Nozzle Piping

NOZZLE-IN HEAD WATERBOXES

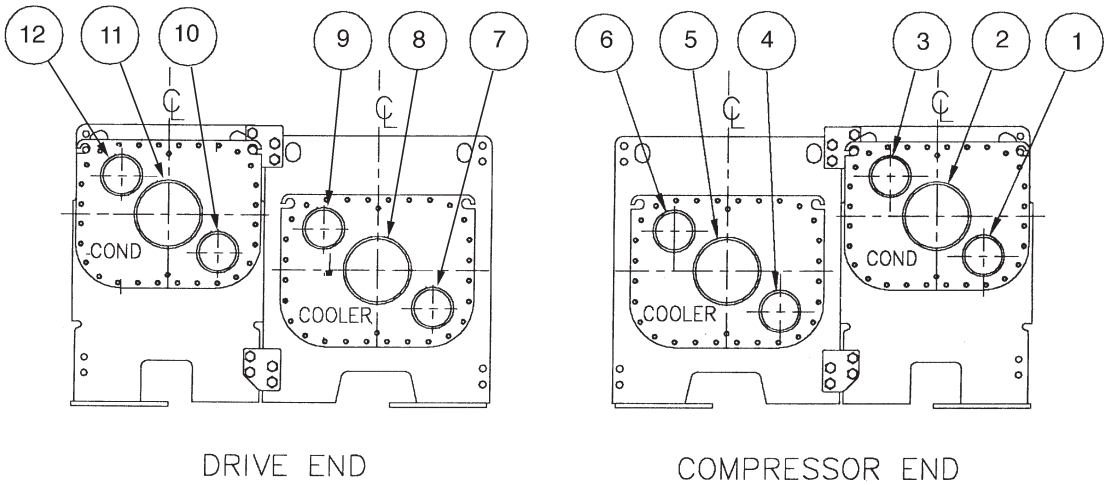

FRAMES 1, 2, AND 3

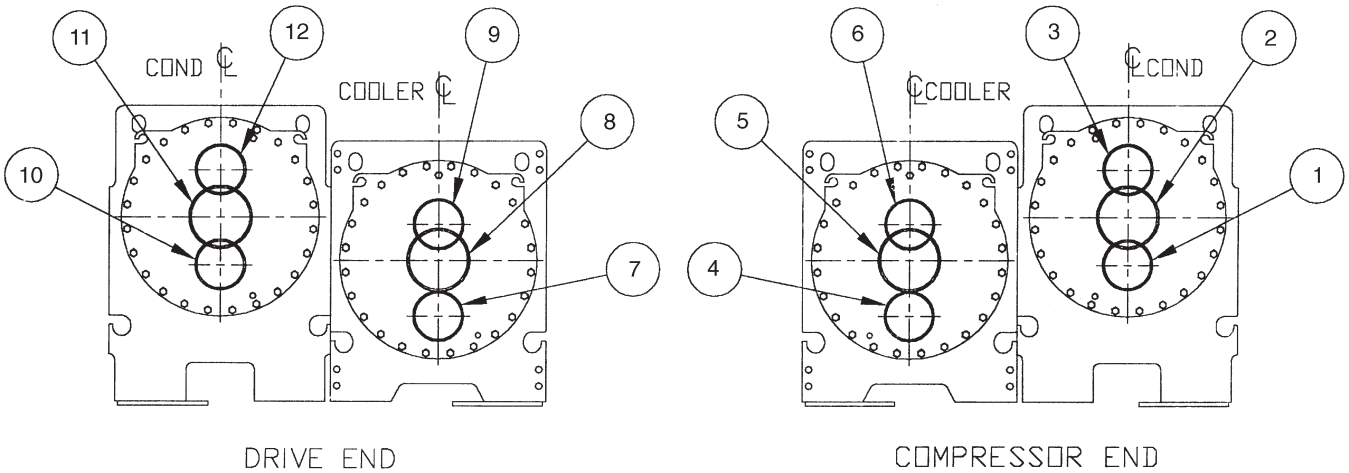

FRAMES 4, 5, AND 6

NOZZLE ARRANGEMENT CODES FOR ALL 19XR NOZZLE-IN-HEAD WATERBOXES

PASS	COOLER WATERBOXES		
	In	Out	Arrangement Code*
1	8	5	A
	5	8	B
2	7	9	C
	4	6	D
3	7	6	E
	4	9	F

PASS	CONDENSER WATERBOXES		
	In	Out	Arrangement Code*
1	11	2	P
	2	11	Q
2	10	12	R
	1	3	S
3	10	3	T
	1	12	U

*Refer to certified drawings.

Fig. 17 — Piping Flow Data (NIH, Frames 1 Through 6)

NOZZLE-IN HEAD WATERBOXES

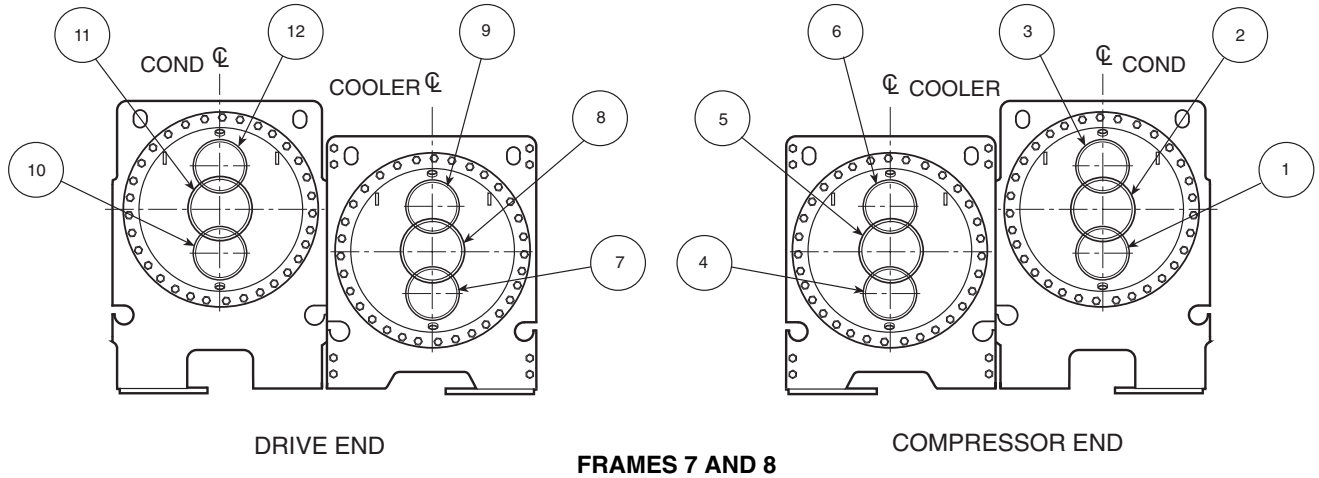

FRAMES 7 AND 8

NOZZLE ARRANGEMENT CODES FOR ALL 19XR NOZZLE-IN-HEAD WATERBOXES

PASS	COOLER WATERBOXES		
	In	Out	Arrangement Code*
1	8	5	A
	5	8	B
2	7	9	C
	4	6	D
3	7	6	E
	4	9	F

PASS	CONDENSER WATERBOXES		
	In	Out	Arrangement Code*
1	11	2	P
	2	11	Q
2	10	12	R
	1	3	S
3	10	3	T
	1	12	U

*Refer to certified drawings.

Fig. 18 — Piping Flow Data (NIH, Frames 7 and 8)

MARINE WATERBOXES

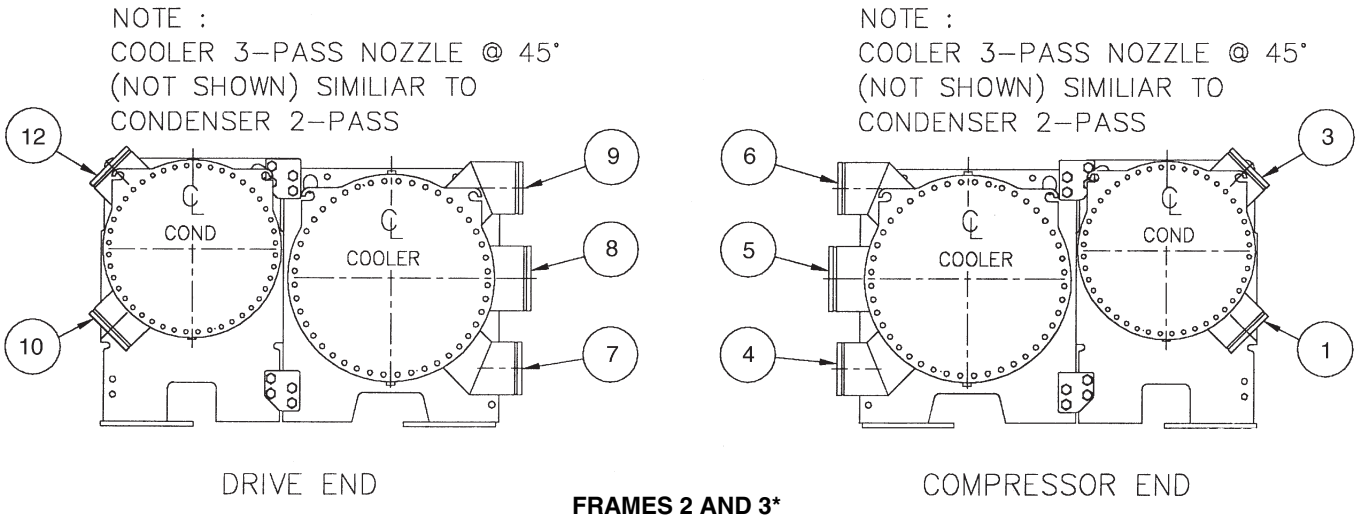

FRAMES 2 AND 3*

*There is no Frame 1 marine waterbox.

NOZZLE ARRANGEMENT CODES

PASS	COOLER WATERBOXES			CONDENSER WATERBOXES		
	In	Out	Arrangement Code	In	Out	Arrangement Code
1	8	5	A	—	—	—
	5	8	B	—	—	—
2	7	9	C	10	12	R
	4	6	D	1	3	S
3	7	6	E	—	—	—
	4	9	F	—	—	—

Fig. 19 — Piping Flow Data (MWB, Frames 2 and 3)

MARINE WATERBOXES

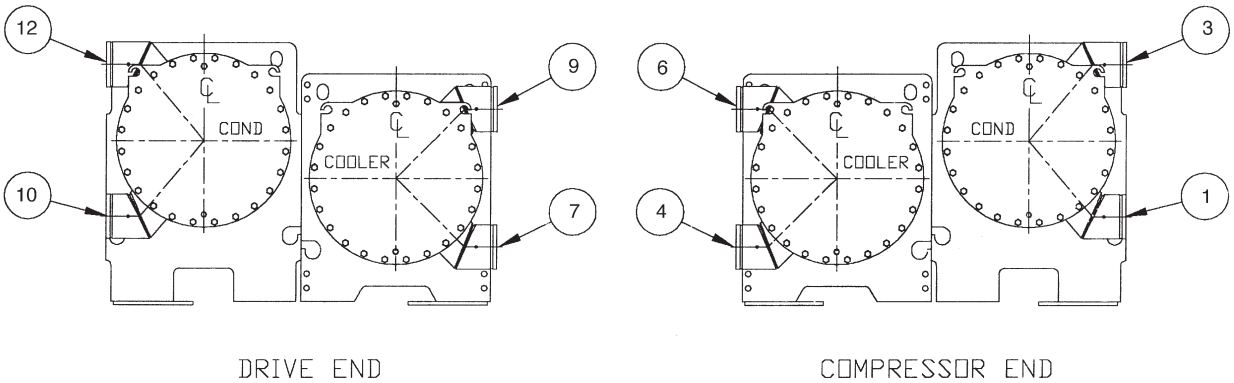

FRAMES 4, 5, AND 6

NOZZLE ARRANGEMENT CODES

PASS	COOLER WATERBOXES			CONDENSER WATERBOXES		
	In	Out	Arrangement Code	In	Out	Arrangement Code
1	9	6	A	—	—	—
	6	9	B	—	—	—
2	7	9	C	10	12	R
	4	6	D	1	3	S
3	7	6	E	—	—	—
	4	9	F	—	—	—

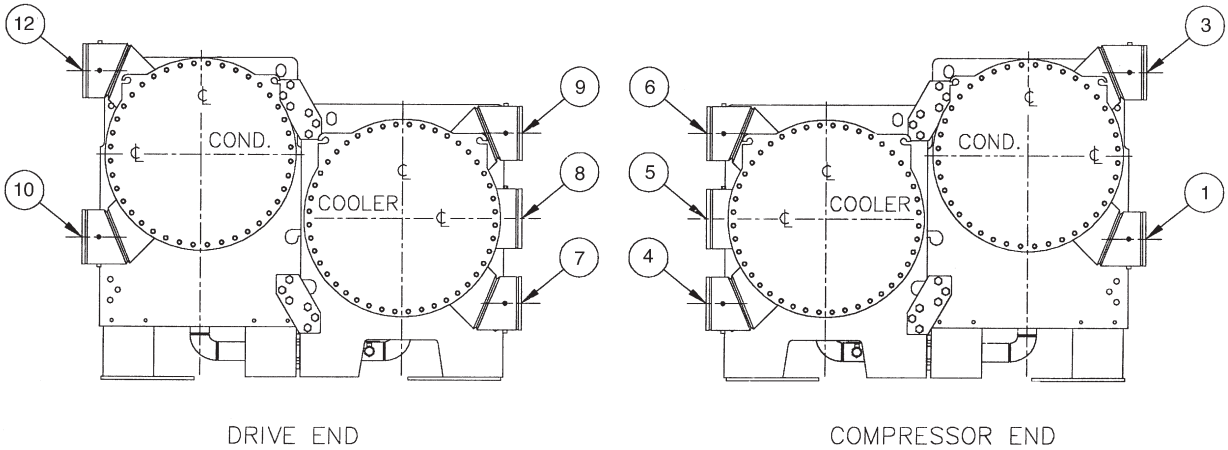

FRAMES 7 AND 8

NOZZLE ARRANGEMENT CODES

PASS	COOLER WATERBOXES			CONDENSER WATERBOXES		
	In	Out	Arrangement Code	In	Out	Arrangement Code
1	8	5	A	—	—	—
	5	8	B	—	—	—
2	7	9	C	10	12	R
	4	6	D	1	3	S
3	7	6	E	—	—	—
	4	9	F	—	—	—

Fig. 20 — Piping Flow Data (MWB, Frames 4 Through 8)

Table 9 — 19XR Waterbox Nozzle Sizes

FRAME SIZE	PRESSURE psig (kPa)	PASS	NOMINAL PIPE SIZE (in.)		ACTUAL PIPE ID (in.)	
			Cooler	Condenser	Cooler	Condenser
1	150/300 (1034/2068)	1	8	8	7.981	7.981
		2	6	6	6.065	6.065
		3	6	6	6.065	6.065
2	150/300 (1034/2068)	1	10	10	10.020	10.020
		2	8	8	7.981	7.981
		3	6	6	6.065	6.065
3	150/300 (1034/2068)	1	10	10	10.020	10.020
		2	8	8	7.981	7.981
		3	6	6	6.065	6.065
4	150/300 (1034/2068)	1	10	10	10.020	10.020
		2	8	8	7.981	7.981
		3	6	6	6.065	6.065
5	150/300 (1034/2068)	1	10	10	10.020	10.020
		2	8	10	7.981	10.020
		3	6	8	6.065	7.981
6	150/300 (1034/2068)	1	10	10	10.020	10.020
		2	10	10	10.020	10.020
		3	8	8	7.981	7.981
7	150 (1034)	1	14	14	13.250	13.250
		2	12	12	12.000	12.000
		3	10	12	10.020	12.000
	300 (2068)	1	14	14	12.500	12.500
		2	12	12	11.376	11.750
		3	10	12	9.750	11.750
8	150 (1034)	1	14	14	13.250	13.250
		2	14	14	13.250	13.250
		3	12	12	12.000	12.000
	300 (2068)	1	14	14	12.500	12.500
		2	14	14	12.500	12.500
		3	12	12	11.376	11.376

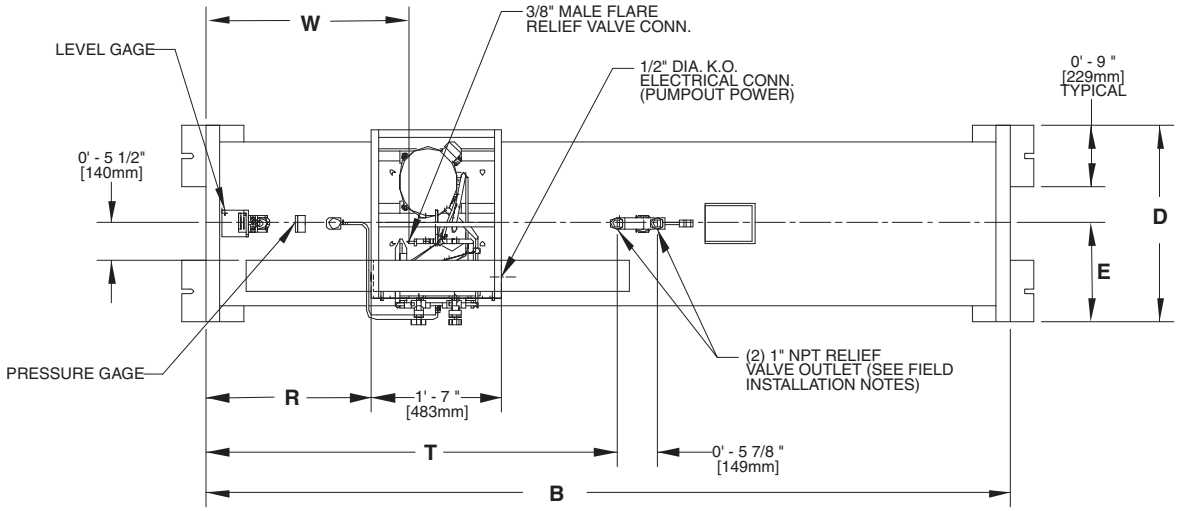

TOP VIEW

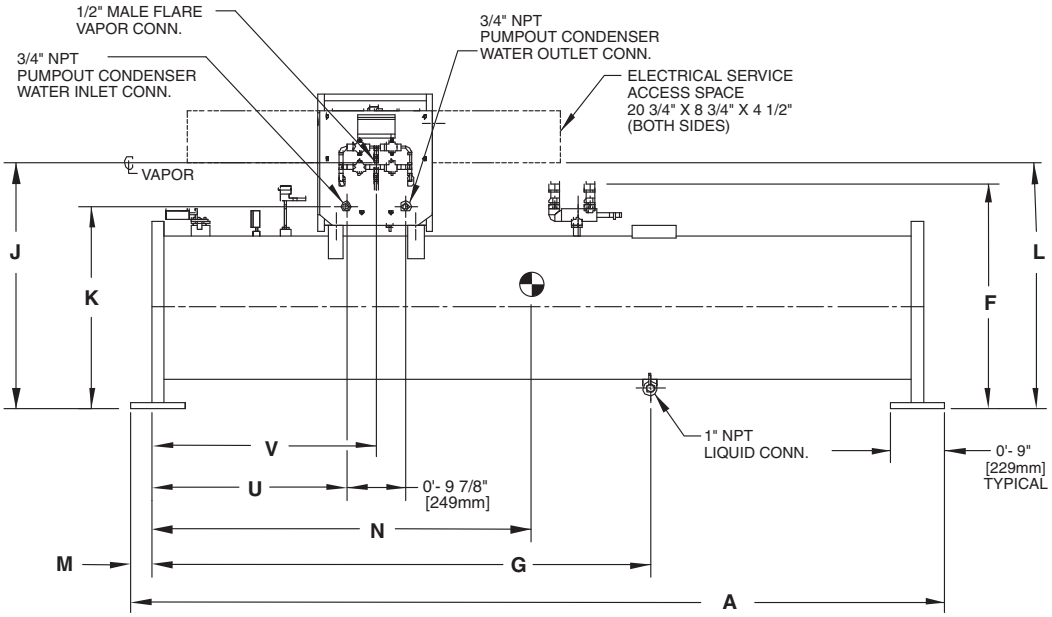

FRONT VIEW

NOTES:

1. Denotes center of gravity.
2. Dimensions in [ ] are in millimeters.
3. The weights and center of gravity values given are for an empty storage tank.
4. For additional information on the pumpout unit, see certified drawings.
5. Conduit knockout is located on the side of the control box.
6. 28 cubic ft storage tank weight: 2334 lb (1059 kg).
7. 52 cu ft storage tank weight: 3414 lb (1549 kg).

AVAILABLE CONDUIT KNOCKOUT SIZES

TRADE SIZE	QTY	LOCATION
1/2″	1	TOP
3/4″	1	BOTTOM
1″	1	MIDDLE
1 1/4″	1	MIDDLE

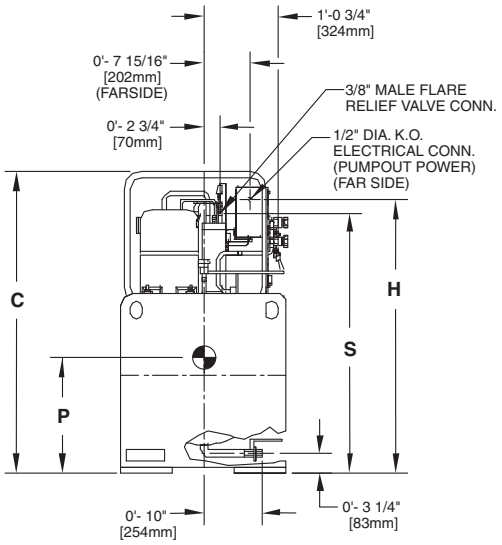

LEFT SIDE VIEW

DIMENSIONS

ENGLISH (ft-in.)

TANK SIZE	A	B	C	D	E	F	G	H	J	K
0428	10- 5	9-10	4-4 1/4	2-4 3/4	1-2 3/8	3-1 1/4	6-4 3/16	3-11 3/8	3-4 7/8	2-9 9/16
0452	14-11 1/4	14- 4 1/2	4-8 1/4	2-8 1/2	1-4 1/4	3-4 1/2	7-2 1/4	4- 3 1/4	3-8 3/4	3-1 7/16

TANK SIZE	L	M	N	P	R	S	T	U	V	W
0428	3-4 5/8	0-3 1/2	4- 9 1/2	1-7 7/8	2-0 3/8	3-9	5-0 1/4	2-5	2-9 7/8	2-5 3/4
0452	3-8 1/2	0-3 3/8	6-11 5/8	1-8 3/4	2-0 5/8	4-1	5-0 1/2	2-5 1/4	2-10 1/8	2-6

SI (mm)

TANK SIZE	A	B	C	D	E	F	G	H	J	K
0428	3175	2997	1327	730	365	946	1935	1203	1038	852
0452	4553	4381	1429	826	413	1029	2191	1302	1137	951

TANK SIZE	L	M	N	P	R	S	T	U	V	W
0428	1032	89	1451	505	619	1143	1530	737	860	756
0452	1130	86	2124	527	625	1225	1537	742	867	762

Fig. 21 — Optional Pumpout Unit and Storage Tank

RATED DRY WEIGHT AND REFRIGERANT CAPACITY)

ENGLISH (lb)					SI (kg)				
TANK SIZE	TANK OD (in.)	DRY WEIGHT* (lb)	MAXIMUM REFRIGERANT CAPACITY (lb)		TANK SIZE	TANK OD (mm)	DRY WEIGHT* (kg)	MAXIMUM REFRIGERANT CAPACITY (kg)	
			ANSI/ASHRAE 15	UL 1963				ANSI/ASHRAE 15	UL 1963
0428	24.00	2334	1860	1716	**0428**	610	1059	844	778
0452	27.25	3414	3563	3286	**0452**	692	1549	1616	1491

LEGEND

ANSI — American National Standard Institute
ASHRAE — American Society of Heating, Refrigerating, and Air-Conditioning Engineers
OD — Outside Diameter
UL — Underwriters Laboratories

*The above dry weight includes the pumpout condensing unit weight of 164 lb (75 kg).

Fig. 21 — Optional Pumpout Unit and Storage Tank (cont)

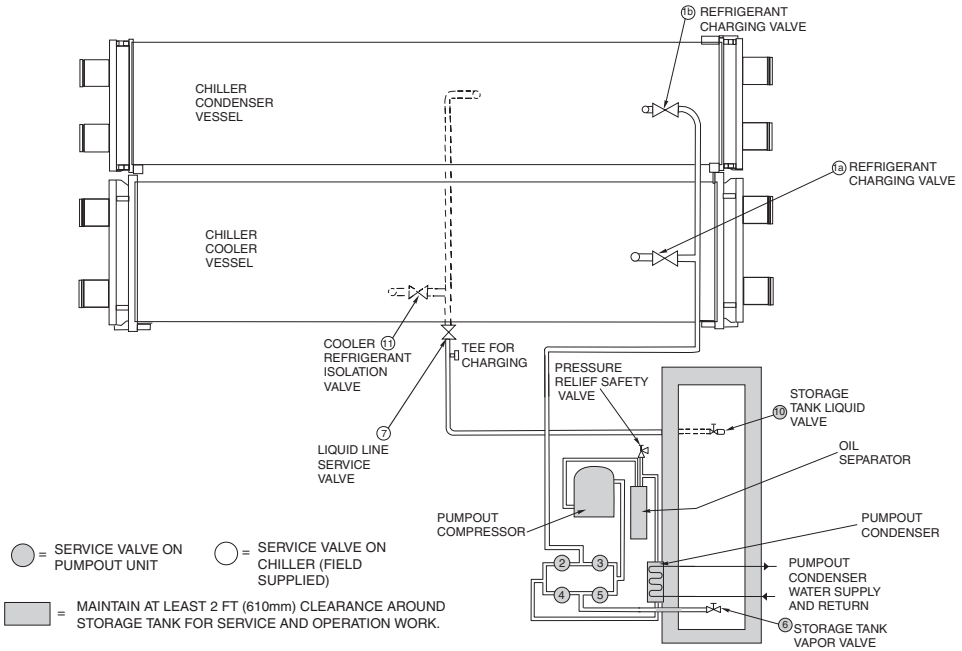

Fig. 22 — Optional Pumpout System Piping Schematic with Storage Tank

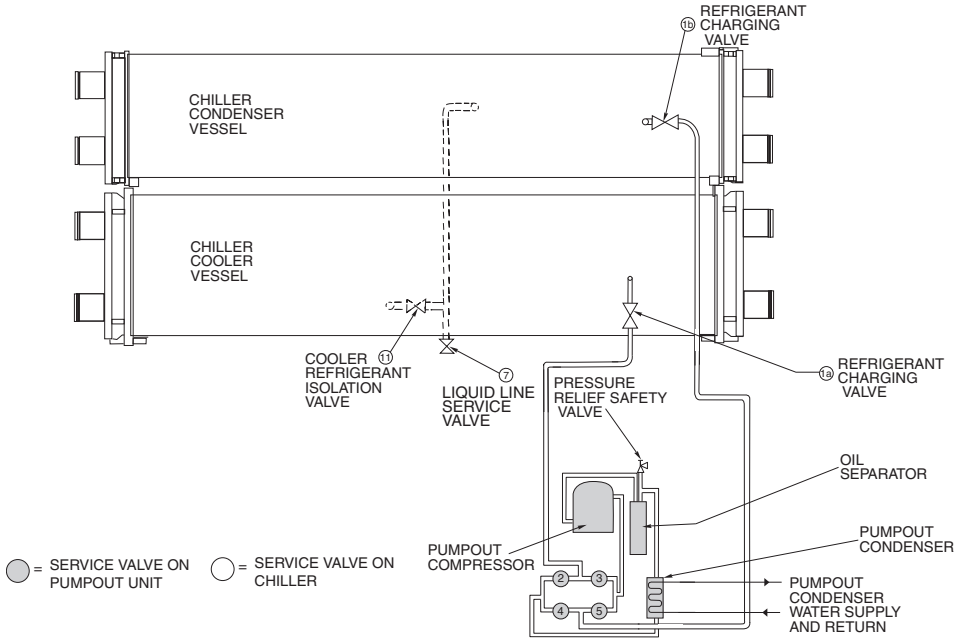

Fig. 23 — Optional Pumpout System Piping Schematic without Storage Tank

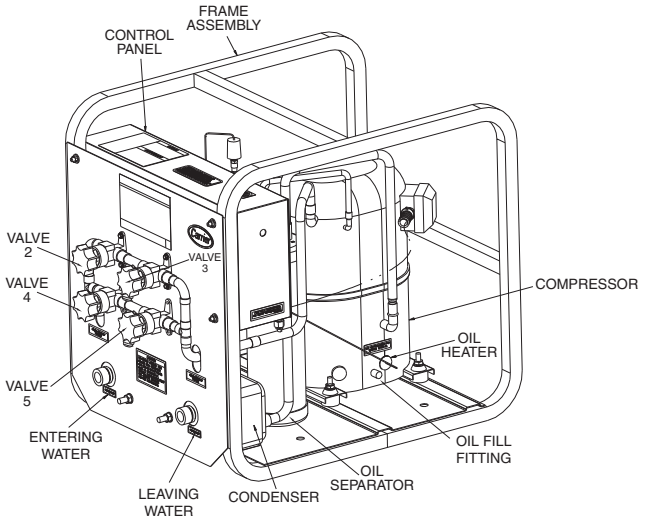

Fig. 24 — Pumpout Unit

INSTALL VENT PIPING TO RELIEF VALVES — The 19XR,XRV chiller is factory equipped with relief valves on the cooler and condenser shells. Refer to Fig. 25 and Tables 10 and 11 for size and location of relief devices. Vent relief devices to the outdoors in accordance with ANSI/ASHRAE 15 (latest edition) Safety Code for Mechanical Refrigeration and all other applicable codes.

⚠ DANGER

Refrigerant discharged into confined spaces can displace oxygen and cause asphyxiation.

1. If relief devices are manifolded, the cross-sectional area of the relief pipe must at least equal the sum of the areas required for individual relief pipes.
2. Provide a pipe plug near outlet side of each relief device for leak testing. Provide pipe fittings that allow vent piping to be disconnected periodically for inspection of valve mechanism.
3. Piping to relief devices must not apply stress to the device. Adequately support piping. A length of flexible tubing or piping near the device is essential on spring-isolated machines.
4. Cover the outdoor vent with a rain cap and place a condensation drain at the low point in the vent piping to prevent water build-up on the atmospheric side of the relief device.

Table 10 — Relief Valve Locations

LOCATION	FRAME SIZE	RELIEF VALVE OUTLET SIZE	QUANTITY OF RELIEF VALVES	
			With Discharge and Cooler Inlet Isolation	Without Discharge and Cooler Inlet Isolation
Cooler	1, 2	1″ NPT FEMALE CONNECTOR	1	2
	3-6	1 1/4″ NPT FEMALE CONNECTOR	1	2
	7,8	1 1/4″ NPT FEMALE CONNECTOR	2	4
Condenser	1, 2	1″ NPT FEMALE CONNECTOR	2	2
	3-6	1 1/4″ NPT FEMALE CONNECTOR	2	2

NOTE: All valves relieve at 185 psi (1275 kPa).

Table 11 — Cooler/Relief Valve Arrangement

HEAT EXCHANGER FRAME SIZE	COMPRESSOR FRAME SIZE	ISOLATION VALVES	COOLER ARRANGEMENT SEE FIGURE NO.	CONDENSER ARRANGEMENT SEE FIGURE NO.
2	2	Yes	25A	25E
		No	25C	25E
3	2	Yes	25A	25E
		No	25C	25E
3	3	Yes	25A	25E
		No	25C	25E
4	3	Yes	25A	25E
		No	25C	25E
5	3	Yes	25A	25E
		No	25C	25E
5	4	Yes	25A	25E
		No	25C	25E
6	4	Yes	25A	25E
		No	25C	25E
7	4	Yes	25B	25F
		No	25D	25F
7	5	Yes	25B	25F
		No	25D	25F
8	5	Yes	25B	25F
		No	25D	25F

WITH OPTIONAL ISOLATION OF DISCHARGE AND COOLER (Fig. A, B)

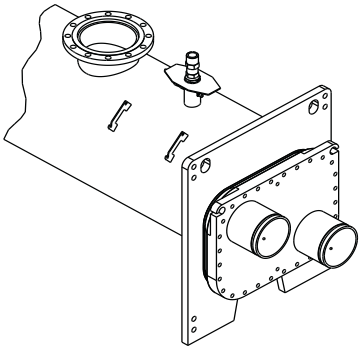

FIG. A

FRAME 1-6

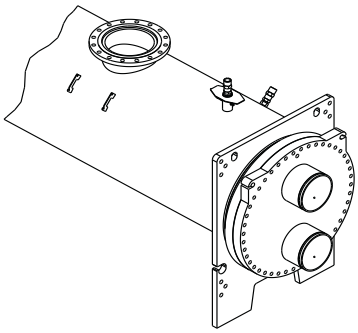

FIG. B

FRAMES 7, 8

WITHOUT ISOLATION OPTION OF DISCHARGE AND COOLER (Fig. C, D)

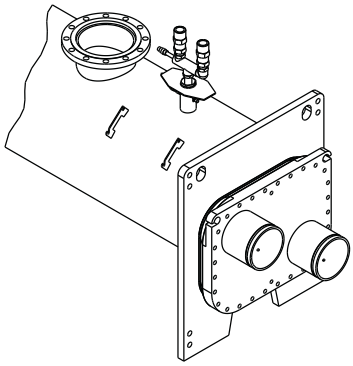

FIG. C

FRAME 1-6

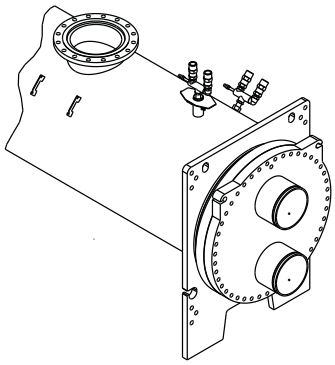

FIG. D

FRAME 7, 8

CONDENSER RELIEF VALVE ARRANGEMENT — WITH OR WITHOUT OPTIONAL ISOLATION (Fig. E, F)

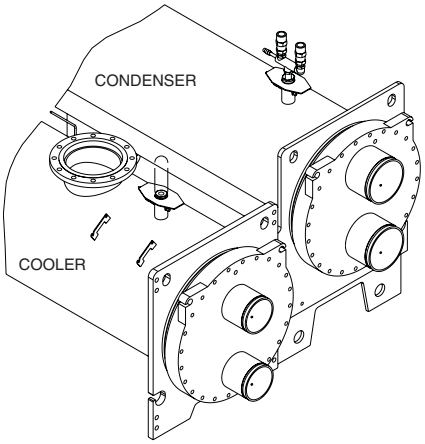

FIG. E

FRAME 1-6

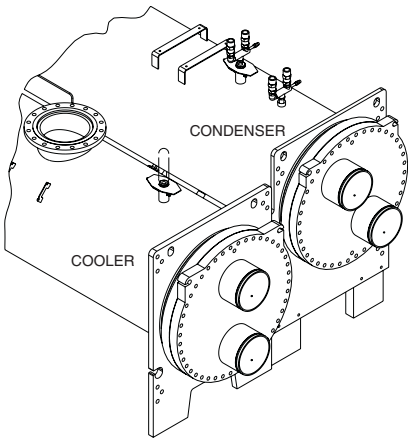

FIG. F

FRAME 7, 8

Fig. 25 — Relief Valve Arrangements

INSTALL CIRCUIT BREAKER HANDLE EXTENSION (Fig. 26) — Unit-mounted standard tier Frame E765-E1530 and LF2 Frame 900-1169 amp VFDs are shipped with handle extension for the VFD main circuit breaker strapped to the VFD mounting frame. This handle extension must be installed by sliding the clip over the circuit breaker handle (Fig. 27).

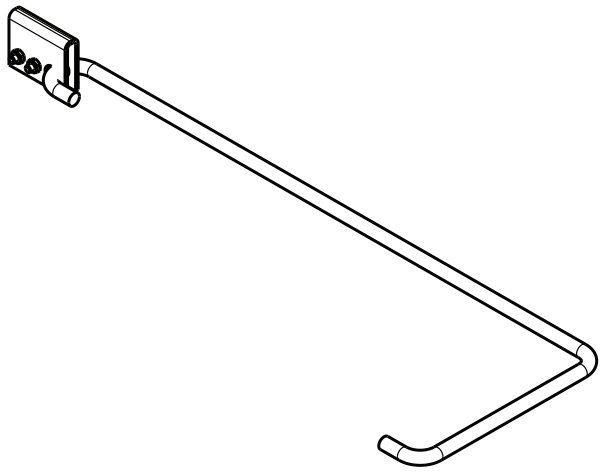

Fig. 26 — Circuit Breaker Handle Extension

Step 5 — Make Electrical Connections — Field wiring must be installed in accordance with job wiring diagrams and all applicable electrical codes.

⚠ CAUTION

Do not run 120-v wiring into the control cabinet. The control cabinet should only be used for additional extra-low voltage wiring (50 v maximum). Damage to machine could result.

Wiring diagrams in this publication (Fig. 28-37) are for reference only and are not intended for use during actual installation; follow job specific wiring diagrams.

⚠ CAUTION

Do not attempt to start compressor or oil pump (even for a rotation check) or apply test voltage of any kind while either chiller module is under dehydration vacuum. Motor insulation breakdown and serious damage may result.

CONNECT CONTROL INPUTS — Wiring may be specified for a spare safety switch, and a remote start/stop contact can be wired to the starter terminal strip. Additional spare sensors and Carrier Comfort Network® modules may be specified as well. These are wired to the machine control panel as indicated in Fig. 28. The PIC II control panel optional wiring and power panel component layout is shown in Fig. 29.

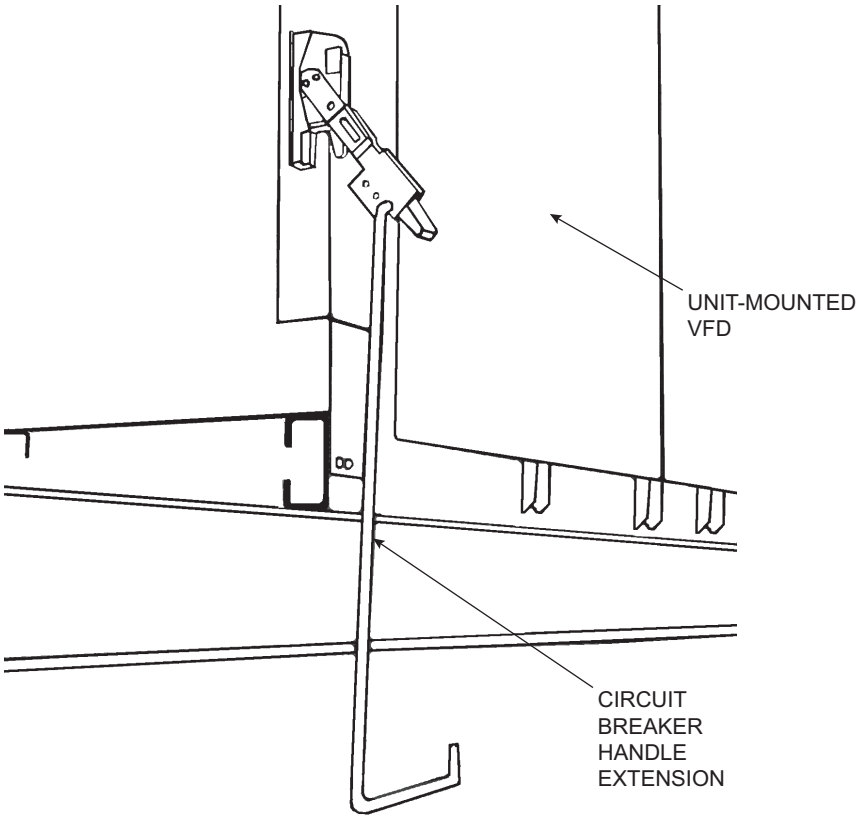

Fig. 27 — Circuit Breaker Handle Extension Installed

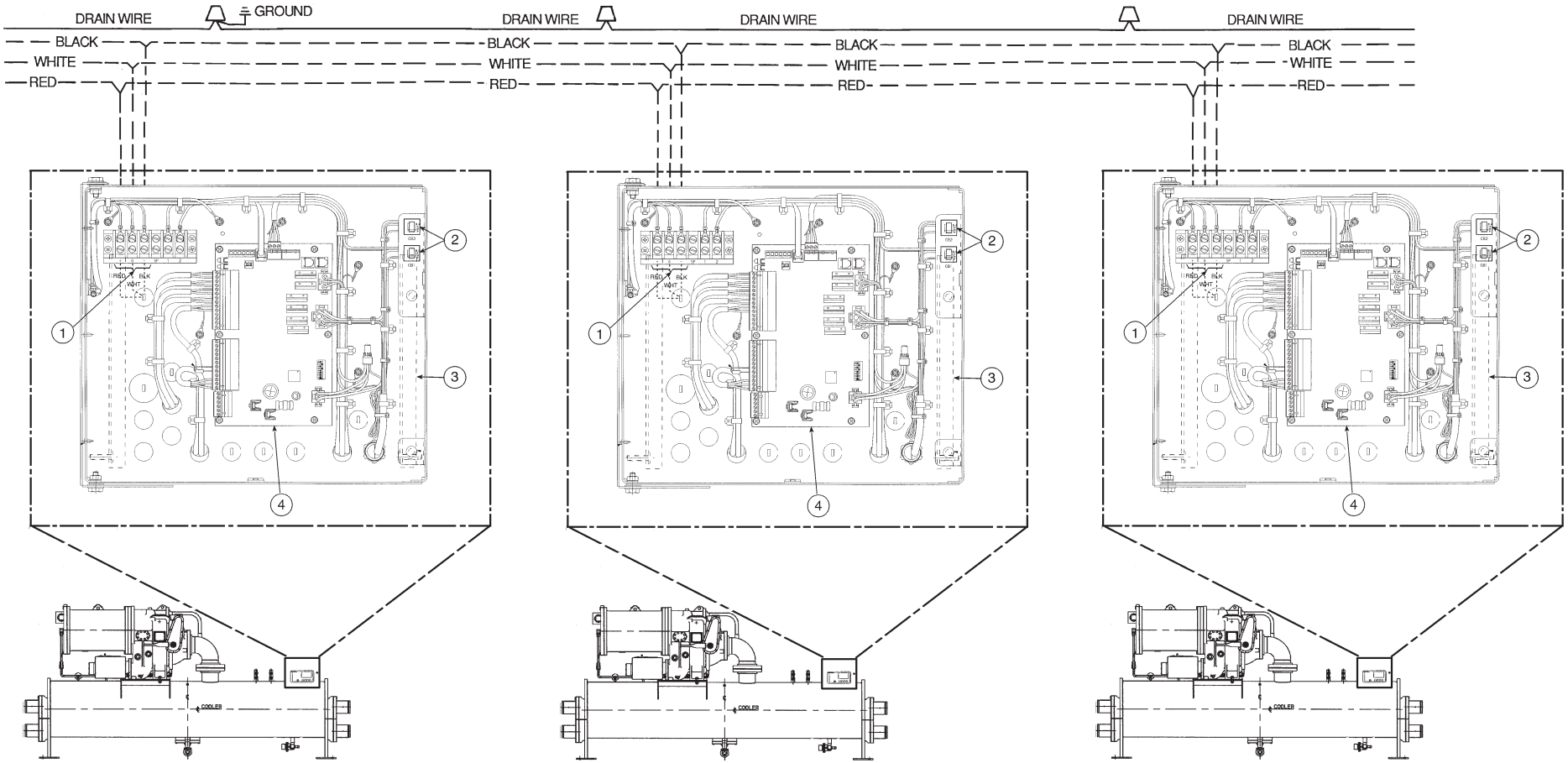

19XR CHILLERS

LEGEND

1 — Carrier Comfort Network (CCN) Interface
2 — Circuit Breakers
3 — Control Panel Internal View
4 — Chiller Control Module (CCM)
——— Factory Wiring
- - - - Field Wiring

NOTE: Field supplied terminal strip must be located in control panel.

Fig. 28 — CCN Communication Wiring for Multiple Chillers (Typical)

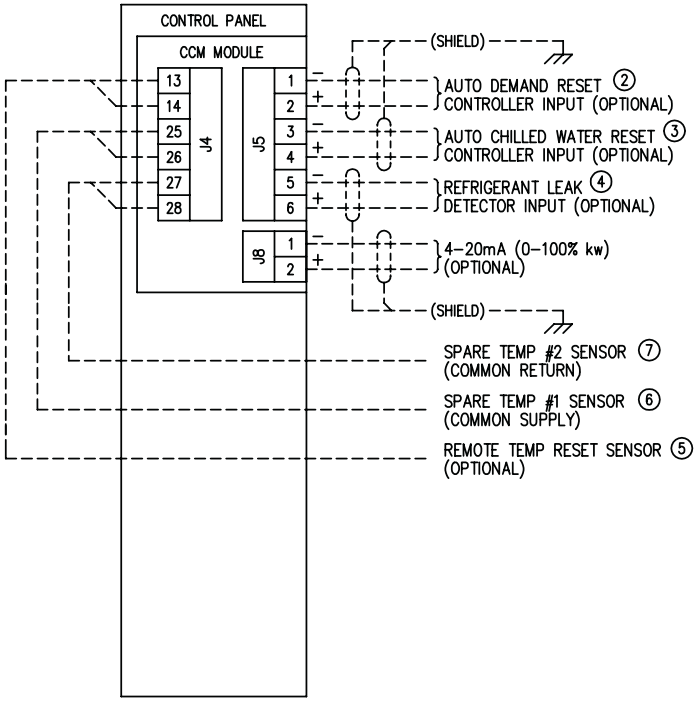

CONTROL PANEL OPTIONAL WIRING

NOTES:

1. THIS FEATURE IS STANDARD IN THE PIC II CONTROLS, BUT REQUIRES A 4–20mA OR 1–5Vdc CONTROLLER, NOT BY CARRIER.
2. THIS FEATURE IS STANDARD IN THE PIC II CONTROLS, BUT REQUIRES AN EXTERNAL 4–20mA CONTROLLER, NOT BY CARRIER.
3. THIS FEATURE IS STANDARD IN THE PIC II CONTROLS, BUT REQUIRES A SENSOR PACKAGE OPTION, BY CARRIER.

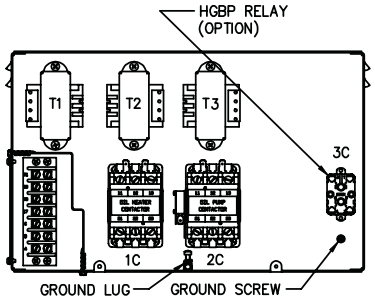

POWER PANEL COMPONENT LAYOUT

(SHOWN WITH COVER REMOVED)

OPTION LISTING			
ITEM	DESCRIPTION	BY CARRIER YES	BY CARRIER NO
1A	N/A		▨
1B	N/A		▨
2	AUTO DEMAND RESET OPTION (4–20mA CONTROLLER) SEE NOTE 1	▨	
3	AUTO CHILLED WATER RESET OPTION (4–20mA CONTROLLER) SEE NOTE 1	▨	
4	REFRIGERANT LEAK SENSOR SEE NOTE 2	▨	
5	REMOTE TEMP RESET SENSOR SEE NOTE 3		▨
6	SPARE TEMP 1 (COMMON SUPPLY SENSOR) SEE NOTE 3		▨
7	SPARE TEMP 2 (COMMON RETURN SENSOR) SEE NOTE 3		▨

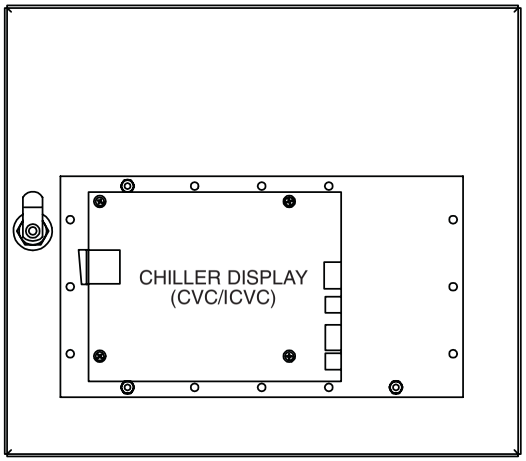

INSIDE PANEL COVER

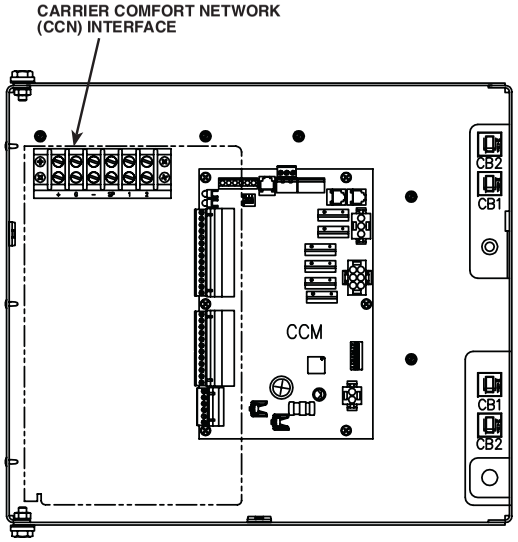

CONTROL PANEL COMPONENT LAYOUT

Fig. 29 — PIC II Control Panel Optional Wiring and Power Panel Component Layout

CONNECT CONTROL OUTPUTS — Connect auxiliary equipment, chilled and condenser water pumps, and spare alarms as required and indicated on job wiring drawings.

CONNECT STARTER — The 19XR chiller is available with a unit-mounted, factory-installed starter or VFD (variable frequency drive) (Fig. 30-32) or a free-standing, field-installed starter or VFD (Fig. 33-37).

Unit-Mounted, Factory-Installed Starter or VFD — Attach power leads by connecting them from inside the starter cabinet to the line side circuit breaker terminals. See Fig. 29-32.

Machines with electro-mechanical starters (wye-delta) will have a top hat shipped with the machine if the RLA (rated load amps) is greater than 935 amps. If the machine is equipped with a solid-state starter, a top hat is provided if the RLA exceeds 740 amps. The top hat is shipped in the knocked-down position and must be assembled and installed on top of the starter cabinet, over the line side circuit breaker. During assembly, remove the access plate and use it as the cover piece of the top hat. The top hat provides additional wire bending space to attach line side power leads to the circuit breaker within the starter.

IMPORTANT: Be sure to ground the power circuit in accordance with the National Electrical Code (NEC), applicable local codes, and job wiring diagrams. Also, make sure correct phasing is observed for proper rotation.

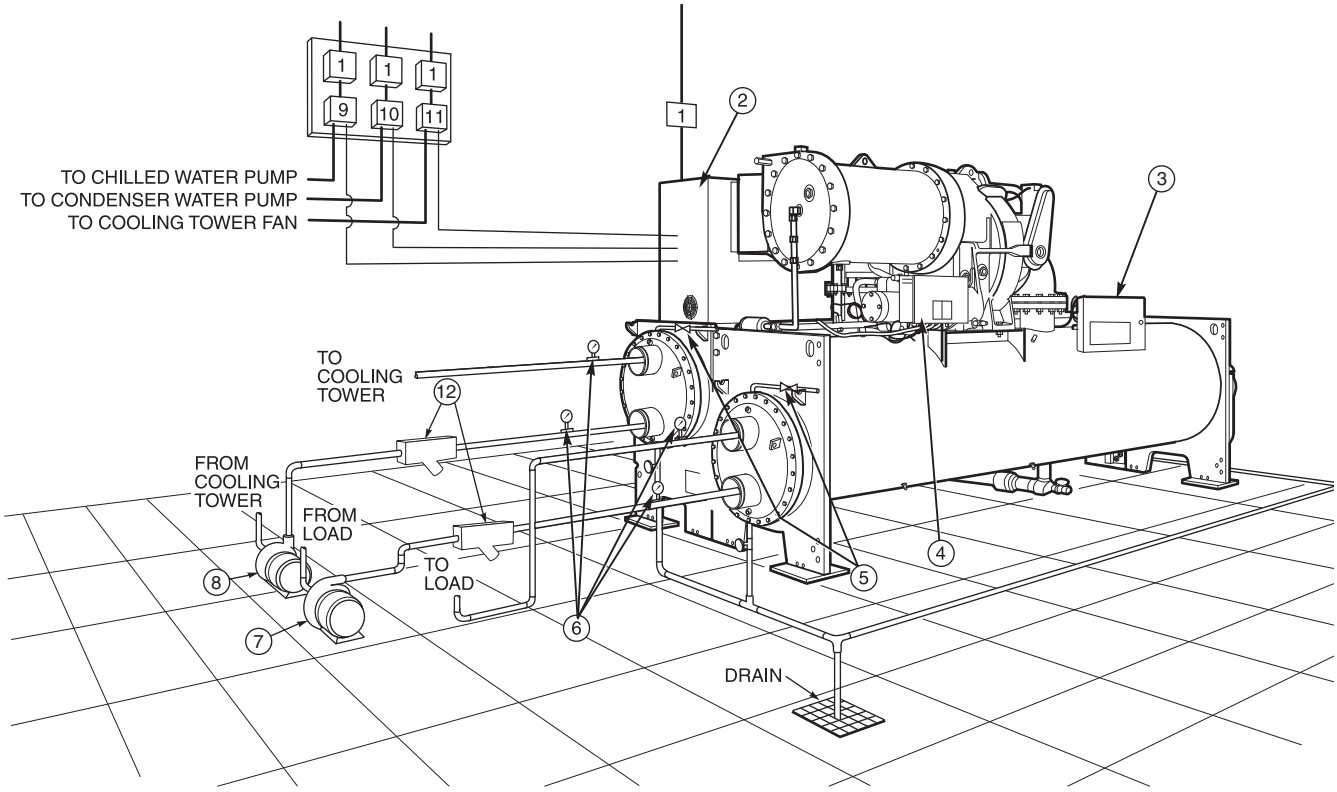

LEGEND

1 — Disconnect
2 — Unit-Mounted Starter or VFD
3 — Control Panel
4 — Power Panel
5 — Vents
6 — Pressure Gages
7 — Chilled Water Pump
8 — Condenser Water Pump
9 — Chilled Water Pump Starter
10 — Condensing Water Pump Starter
11 — Cooling Tower Fan Starter (Low Fan, High Fan)
12 — Strainers
Piping
Control Wiring
Power Wiring

IMPORTANT: Wiring and piping shown are for general point-of-connection only and are not intended to show details for a specific installation. Certified field wiring and dimensional diagrams are available on request.

NOTES:
1. All wiring must comply with applicable codes.
2. Wiring not shown for optional devices such as:
   - Remote Start/Stop
   - Remote Alarms
   - Optional Safety Device
   - 4 to 20 mA Resets
   - Optional Remote Sensors
3. IMPORTANT: Carrier suggests that a structural engineer be consulted if transmission of vibrations from mechanical equipment is of concern.
4. Isolation valves are recommended on the cooler and condenser piping to each chiller for service.

Fig. 30 — 19XR with Unit-Mounted Starter or VFD with ISM (Integrated Start Module)

LEGEND FOR FIG. 31
19XR with Unit-Mounted Starter

REFERENCE NUMBER	EXPLANATION
1	3 Phase Under/Over Voltage
	Phase Loss/Imbalance/Reversal
	Motor Overload Protection
	Frequency Shift
	kW Transducer/kW Hours/Demand kW
	Single Cycle Dropout
	Motor/Starter Overcurrent
	Control Power Transformer (3KVA) (Integral)
	Controls and Oil Heater Circuit Breaker (integral)
	Oil Pump Circuit Breaker (Integral)
	4-20ma Head Pressure Reference Output
	3 Phase Analog Volts/Amps Meter Package
	Power Factor Correction Package
	Lightning/Surge Arrestor Package
	Phase to Phase to Ground Fault Detection
	Phase to Ground Fault Detection
2	Compressor Motor Starter Branch Disconnect
A	Evaporator Liquid Pump Starter Disconnect
B	Evaporator Liquid Pump Motor Starter
C	Condenser Liquid Pump Starter Disconnect
D	Condenser Liquid Pump Motor Starter
E	Cooling Tower Fan Motor Starter Disconnect (Low Fan/#1)
F	Cooling Tower Fan Motor Starter (Low Fan/#1)
G	Cooling Tower Fan Motor Starter Disconnect (High Fan/#2)
H	Cooling Tower Fan Motor Starter (High Fan/#2)
J	Spare Safety Devices [N.C.] See Note 3.1
K	Remote Start/Stop Device [N.O] See Note 3.1
L	Remote Alarm See Note 3.3
M	Remote Annunciator See Note 3.3
N	Lug Adapters See Note 2.1
P	Ice Build Start/Terminate Device See Note 3.1

See Notes on page 50.

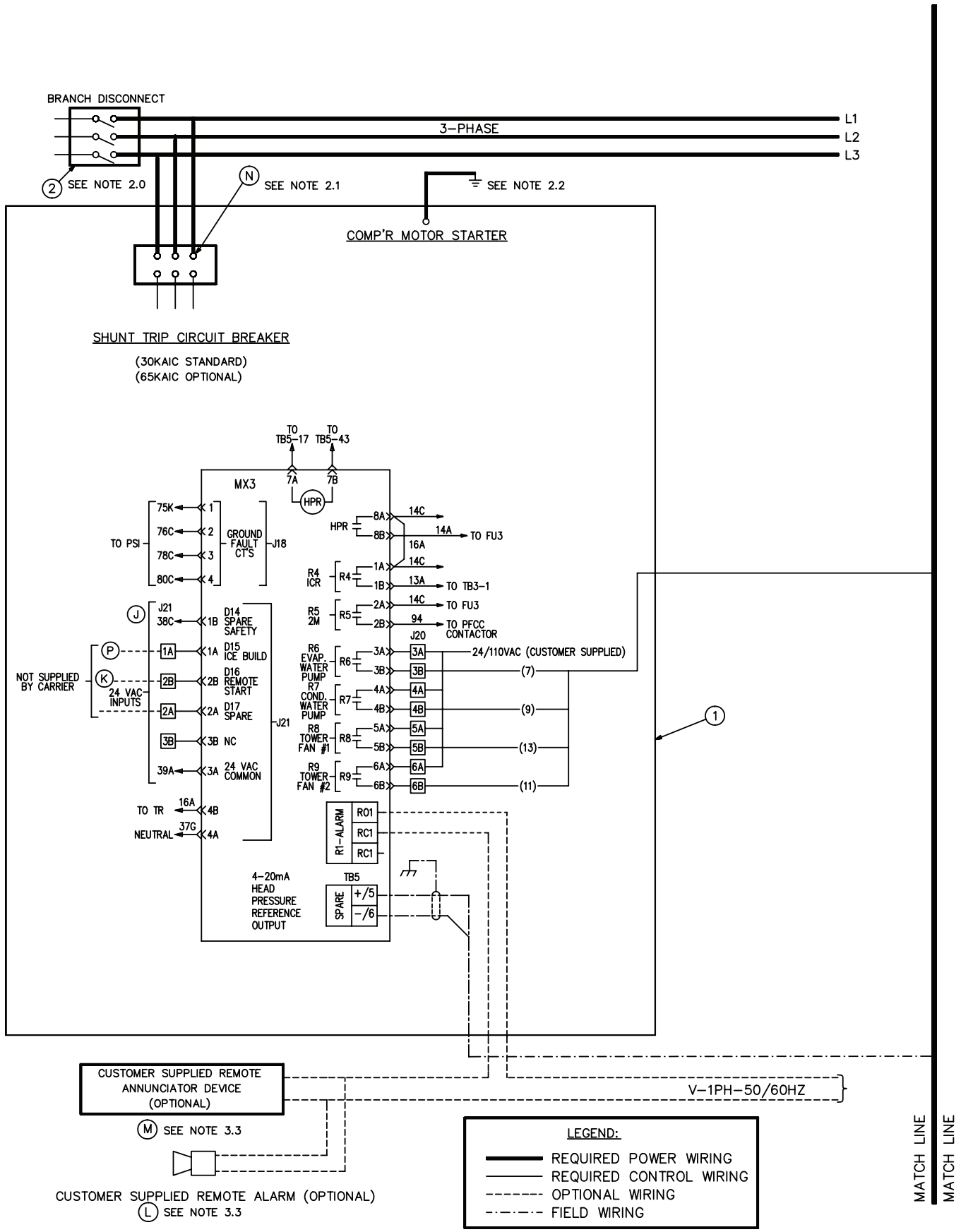

NOTE: See Legend on page 47.

Fig. 31 — 19XR Typical Field Wiring with Unit-Mounted Starter

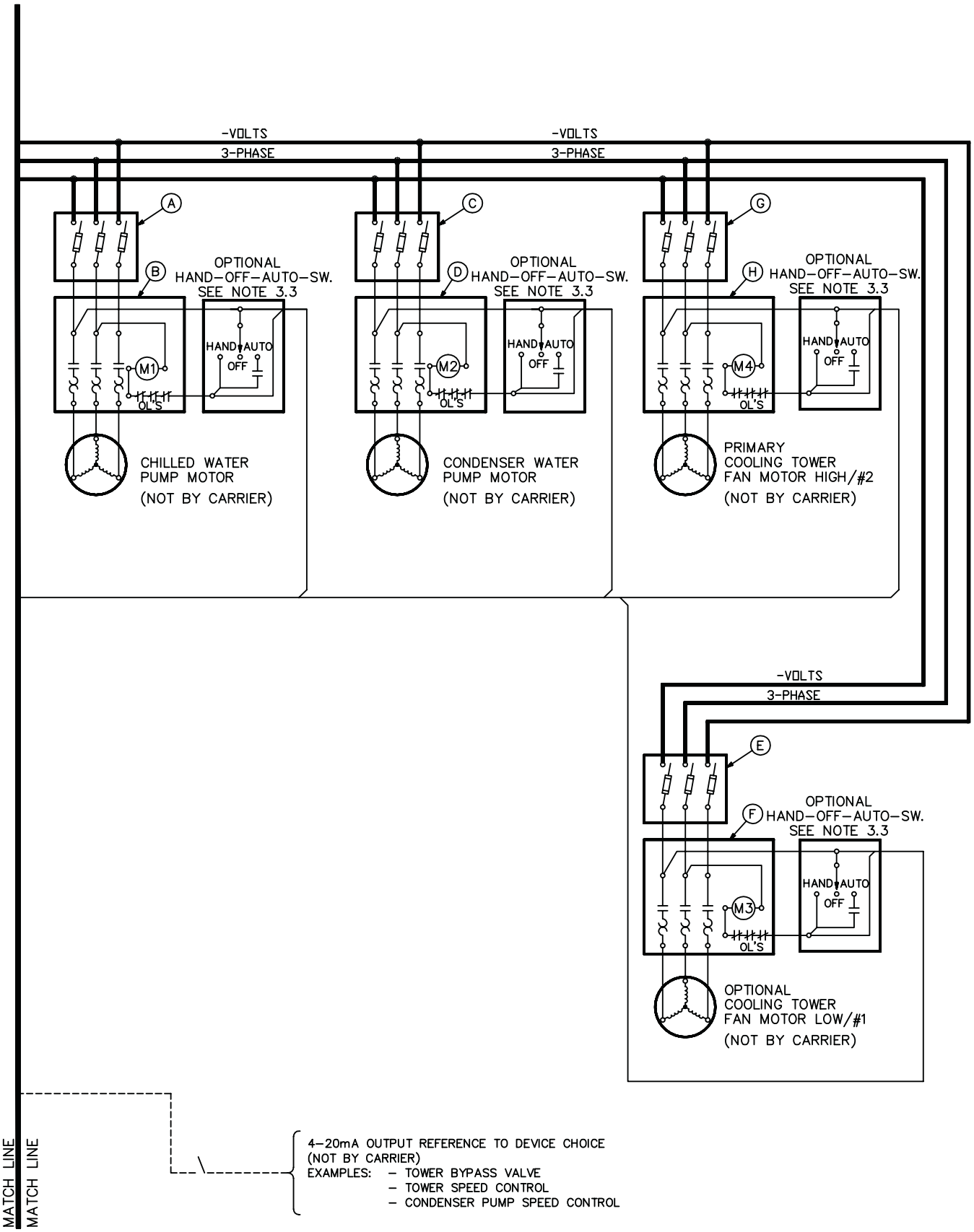

Fig. 31 — 19XR Typical Field Wiring with Unit-Mounted Starter (cont)

NOTES FOR FIG. 31
19XR with Unit-Mounted Starter

I. GENERAL

1.0 Starters shall be designed and manufactured in accordance with Carrier Engineering Requirement Z-415.

1.1 All field-supplied conductors, devices, and the field-installation wiring, and termination of conductors and devices, must be in compliance with all applicable codes and job specifications.

⚠ CAUTION

To prevent damage to machine, do NOT punch holes or drill into the top surface of the starter enclosure for field wiring. Knock-outs are provided on the side of the starter enclosure for field wiring connections.

1.2 The routing of field-installed conduit and conductors and the location of field-installed devices must not interfere with equipment access or the reading, adjusting, or servicing of any component.

1.3 Equipment installation and all starting and control devices, must comply with details in equipment submittal drawings and literature.

1.4 Contacts and switches are shown in the position they would assume with the circuit de-energized and the chiller shut down.

1.5 WARNING — Do not use aluminum conductors.

1.6 Installer is responsible for any damage caused by improper wiring between starter and machine.

II. POWER WIRING TO STARTER

2.0 Provide a means of disconnecting power to starter.

2.1 Power conductor rating must meet minimum unit nameplate voltage and compressor motor FLA (minimum circuit ampacity).

2.2 Lug adapters may be required if installation conditions dictate that conductors be sized beyond the minimum ampacity required. Breaker lugs will accommodate the quantity (#) and size (MCM) cables (per phase) as indicated in tables below.

ALLEN BRADLEY (WYE-DELTA)

Starter RLA	Lug Capacity (Per Phase)	
	# Conductors	Conductor Range
186-207A	1	3 AWG — 350 MCM
208-296A	2	2/0 AWG — 250 MCM
297-444A	2	250 — 350 MCM
445-606A	2	1 AWG — 500 MCM
607-888A	4	4/0 AWG — 500 MCM
889-1316A	4	500 — 1000 MCM

BENSHAW (SOLID-STATE)

Starter RLA	Lug Capacity (Per Phase)		
	# Conductors	Conductor Range	Frame Size
95-200A	1	6 AWG — 350 MCM	2, 3
201-480A	2	3/0 AWG — 500 MCM	2, 3
481-640A	3	1/0 AWG — 500 MCM	2, 3
641-739A	4	250 — 500 MCM	2, 3
740-979A	5	6 AWG — 350 MCM	4, 5
980-1390A	2	3/0 AWG — 500 MCM	4, 5

BENSHAW (WYE-DELTA)

Starter RLA	Lug Capacity (Per Phase) Circuit Breaker or Terminal Block (Option)		
	# Conductors	Conductor Range	Frame Size
112-185A	1	6 AWG — 350 MCM	2, 3
186-474A	2	3/0 AWG — 500 MCM	2, 3
475-606A	3	1/0 AWG — 500 MCM	2, 3
607-775A	4	250 — 500 MCM	4
776-804A	4	250 — 500 MCM	4, 5
805-1138A	5	300 — 600 MCM	4, 5
1139-1151	5	300 — 600 MCM	4, 5

CUTLER-HAMMER (WYE-DELTA)

Starter RLA	Lug Capacity (Per Phase)	
	# Conductors	Conductor Range
112-185A	1	4 AWG — 350 MCM
186-296A	2	2/0 AWG — 250 MCM
297-444A	2	250 — 350 MCM
445-606A	2	1 AWG — 500 MCM
607-888A	4	4/0 AWG — 500 MCM
889-1316A	4	500 — 1000 MCM

2.3 Power conductors to starter must enter through top of enclosure. Flexible conduit should be used for the last few feet to the enclosure to provide unit vibration isolation.

2.4 Compressor motor and controls must be grounded by using equipment grounding lugs provided inside unit-mounted starter enclosure.

2.5 Starters with “Rated Load Amps” (RLA) greater than 433A require the assembly and the installation of a “Top Hat” (located inside enclosure) to provide the required wire bending space for incoming power leads.

2.6 Metering current transformers (CTs), if present, have an inner diameter of $2^3/_4$ inches. Caution should be taken when selecting power wiring so that all power cables can pass through the CTs.

III. CONTROL WIRING

3.0 Field-supplied control conductors to be at least 18 AWG or larger.

3.1 Ice build start/terminate device contacts, remote start/stop device contacts and spare safety device contacts (devices not supplied by Carrier), must have 24 VAC rating. MAX current is 60 mA, nominal current is 10 mA. Switches with gold plated bifurcated contacts are recommended.

3.2 Remove jumper wire between J2-1 and J2-2 before connecting auxiliary safeties between these terminals.

3.3 Each integrated contact output can control loads (VA) for evaporator pump, condenser pump, tower fan low, tower fan high, and alarm annunciator devices rated 5 amps at 115 VAC and up to 3 amps at 277 VAC.

⚠ CAUTION

Control wiring for Carrier to start pumps and tower fan motors and establish flows must be provided to assure machine protection. If primary pump, tower fan, and flow control is by other means, also provide parallel means for control by Carrier. Failure to do so could result in machine freeze-up or overpressure.

Do not use control transformers in the control center as the power source for external or field-supplied contactor coils, actuator motors or any other loads.

3.4 If one single speed fan is used, connect fan control leads J9-13 and -14, jumper ISM J9-13 to -11, and jumper J9-14 to -12. This will allow the fan to be actuated by closure of either “low fan” or “high fan” ISM channel contact.

3.5 Do not route control wiring carrying 30 v or less within a conduit which has wires carrying 50 v or higher or along side wires carrying 50 v or higher.

3.6 Control wiring between starter and power panel must be separate shielded cables with minimum rating of 600 v, 80 C. Ground shield at starter.

3.7 Spare 4-20 mA output signal is designed for controllers with a non-grounded 4-20 mA input signal and a maximum input impedance of 500 ohms.

3.8 Flow devices to confirm evaporator or condenser pump flow are not required. However; if flow devices are used, wire as shown in diagram below. Remove jumper installed at these terminals and wire in a 4.3 K resistor in its place. The flow device and resistor must be installed in parallel at these terminals such that the resistor provides a signal when the flow device is open.

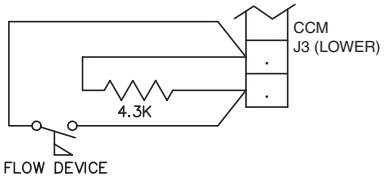

LEGEND FOR FIG. 32
19XR with Unit-Mounted VFD with ISM

REFERENCE NUMBER	EXPLANATION
1	3 Phase Under/Over Voltage (Line Side)
	Phase Loss/Imbalance/Reversal (Line Side)
	Frequency Shift (Line Side)
	kW Transducer/kW Hours/Demand kW
	Over Current
	Control Power Transformer (3KVA)
	Controls and Oil Heater Fused Disconnect (FU2)
	Oil Pump Circuit Fused Disconnect (FU1)
	Phase to Ground Fault Protection
	3 Phase Analog Volts/Amps Meter Package
2	System Feeder (Short Circuit, Ground Fault and Protection)
A	Evaporator Liquid Pump Starter Disconnect
B	Evaporator Liquid Pump Motor Starter
C	Condenser Liquid Pump Starter Disconnect
D	Condenser Liquid Pump Motor Starter
E	Cooling Tower Fan Motor Starter Disconnect (Low Fan/#1)
F	Cooling Tower Fan Motor Starter (Low Fan/#1)
G	Cooling Tower Fan Motor Starter Disconnect (High Fan/#2)
H	Cooling Tower Fan Motor Starter (High Fan/#2)
J	Spare Safety Devices [N.C.] See Note 3.1
K	Remote Start/Stop Device [N.O] See Note 3.1
L	Remote Alarm See Note 3.3
M	Remote Annunciator See Note 3.3
N	Lug Adapters See Note 2.3
P	Ice Build Start/Terminate Device See Note 3.1

See Notes on page 54.

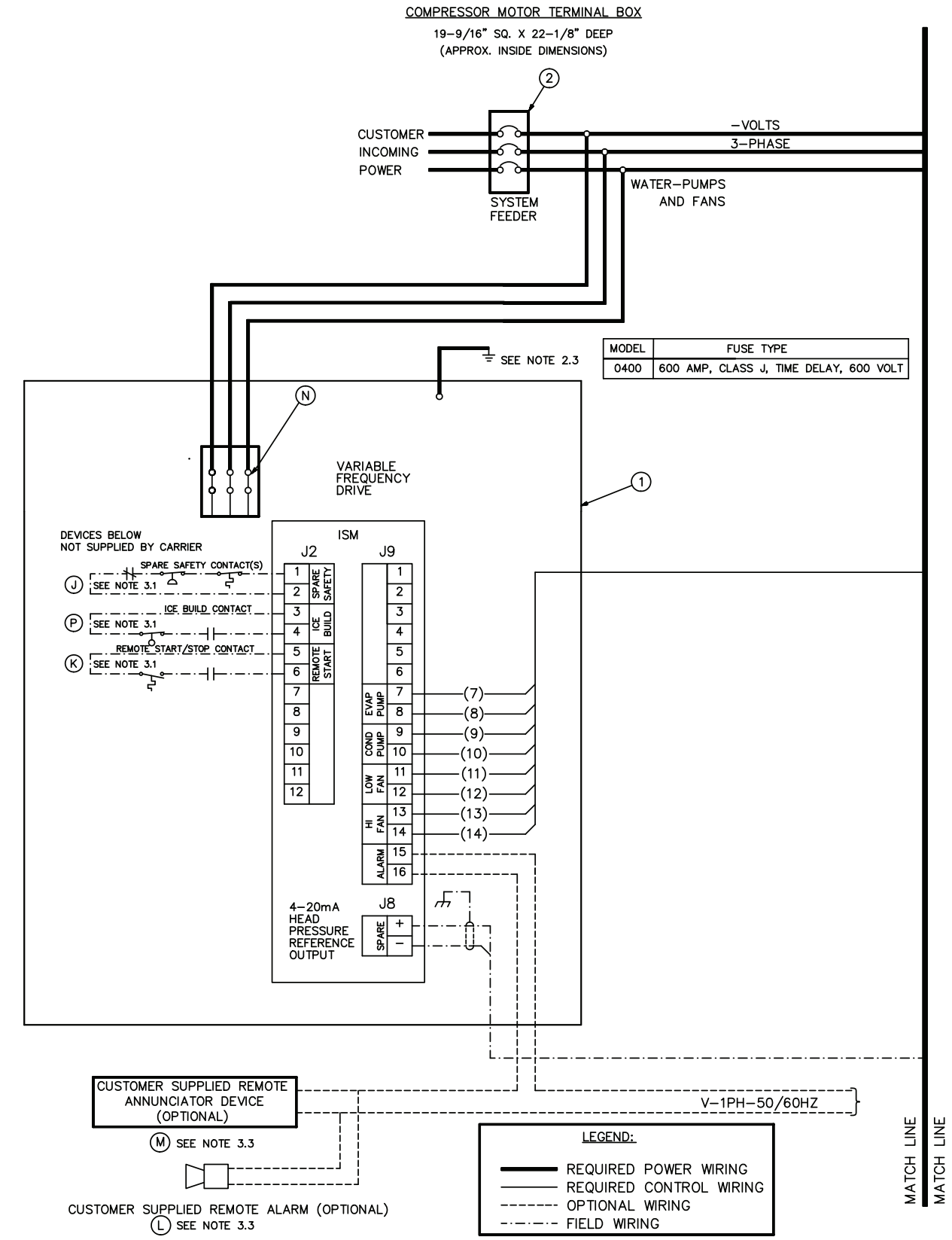

NOTE: See Legend on page 51.

Fig. 32 — 19XR Typical Wiring with Unit-Mounted Variable Frequency Drive with ISM (Integrated Start Module)

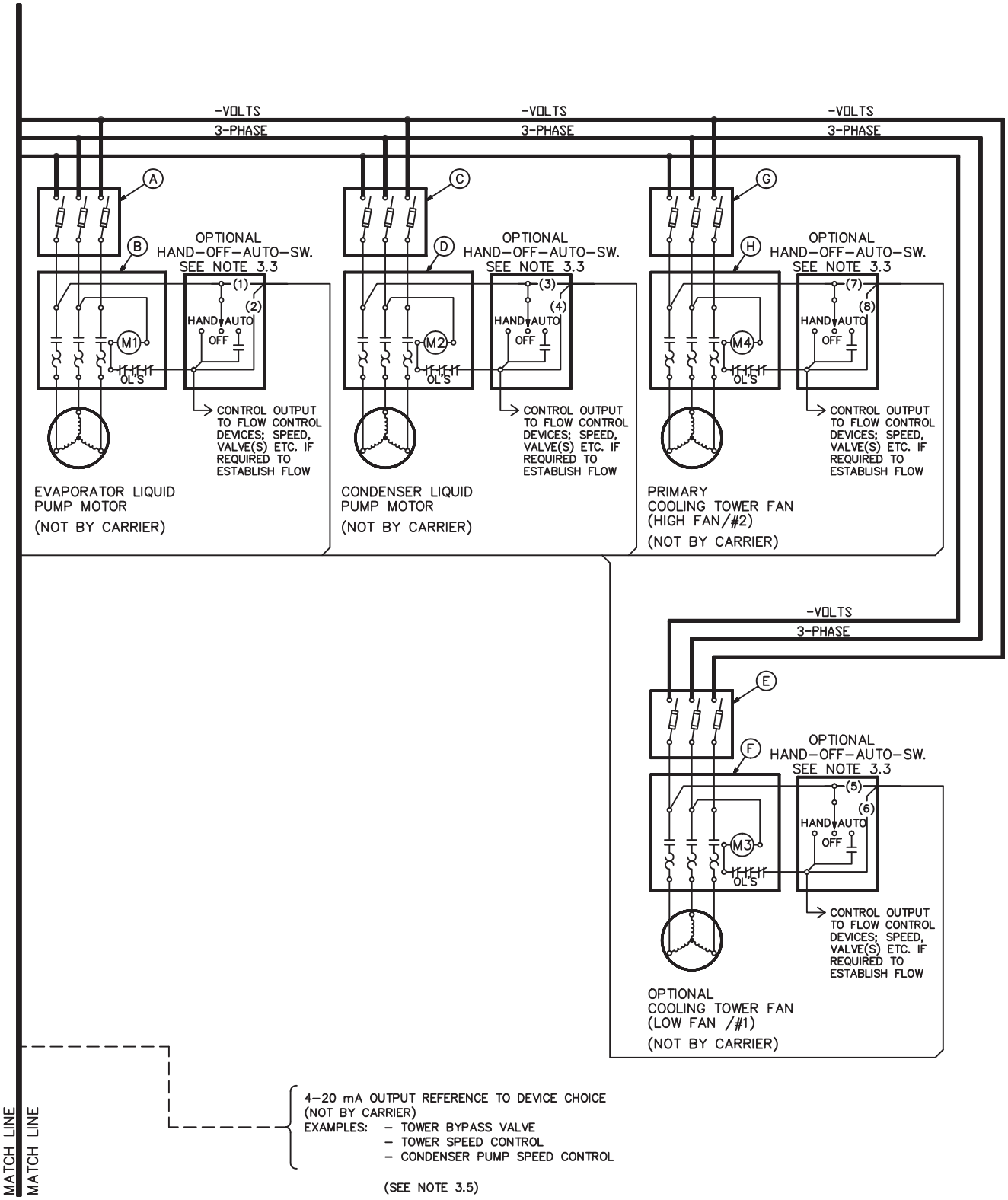

Fig. 32 — 19XR Typical Wiring with Unit-Mounted Variable Frequency Drive with ISM (Integrated Start Module) (cont)

NOTES FOR FIG. 32
19XR with Unit-Mounted VFD with ISM

I. GENERAL

1.0 Variable frequency drive (VFD) starters shall be designed and manufactured in accordance with Carrier Engineering Requirement Z-416.

1.1 All field-supplied conductors, devices, and the field installation wiring, and termination of conductors and devices, must be in compliance with all applicable codes and job specifications.

⚠ CAUTION

To prevent damage to machine, do NOT punch holes or drill into the top surface of the VFD enclosure for field wiring. Knockouts are provided on the side of the VFD enclosure for field wiring connections.

1.2 The routing of field-installed conduit and conductors and the location of field-installed devices must not interfere with equipment access or the reading, adjusting, or servicing of any component.

1.3 Equipment installation and all starting and control devices, must comply with details in equipment submittal drawings and literature.

1.4 Contacts and switches are shown in the position they would assume with the circuit de-energized and the chiller shut down.

1.5 WARNING — Do not use aluminum conductors.

1.6 Installer is responsible for any damage caused by improper wiring between VFD and machine.

1.7 All field-installed wiring is field-supplied.

II. POWER WIRING TO VFD

2.0 Provide a local means of disconnecting power to VFD. Provide short circuit protection for the chiller and interconnecting wire at the branch feeder. The short circuit protection shall be fused type or equivalent circuit breaker.

2.1 Metal conduit must be used for the power wires from VFD to branch feeder.

2.2 Line side power conductor rating must meet the VFD nameplate voltage and chiller full load amps (minimum circuit ampacity).

2.3 Lug adapters may be required if installation conditions dictate that conductors be sized beyond the minimum ampacity required. Disconnect lugs will accommodate the quantity (#) and size (MCM) cables (per phase) as indicated in table below. If larger lugs are required, the lugs can be purchased from Cutler-Hammer.

VFD Max Input Amps	Standard 65KAIC Lug Capacity (Per Phase)	
	No. of Conductors	Conductor Range
390	3	2/0-400 MCM

2.4 Compressor motor and controls must be grounded by using equipment grounding lugs provided inside unit-mounted VFD enclosure.

2.5 Metering current transformers (CTs), if present, have an inner diameter of $2^3/_4$ inches. Caution should be taken when selecting power wiring so that all power cables can pass through the CTs.

III. CONTROL WIRING

3.0 Field-supplied control conductors to be at least 18 AWG or larger.

3.1 Ice build start/terminate device contacts, remote start/stop device contacts and spare safety device contacts (devices not supplied by Carrier), must have 24 VAC rating. MAX current is 60 mA, nominal current is 10 mA. Switches with gold plated bifurcated contacts are recommended.

3.2 Each integrated contact output can control loads (VA) for evaporator pump, condenser pump, tower fan low, tower fan high, and alarm annunciator devices rated 5 amps at 115 VAC and up to 3 amps at 277 VAC.

⚠ CAUTION

Control wiring for Carrier to start pumps and tower fan motors and establish flows must be provided to assure machine protection. If primary pump, tower fan, and flow control is by other means, also provide parallel means for control by Carrier. Failure to do so could result in machine freeze-up or overpressure.

Do not use control transformers in the control center as the power source for external or field-supplied contactor coils, actuator motors or any other loads.

3.4 Do not route control wiring carrying 30 v or less within a conduit which has wires carrying 50 v or higher or along side wires carrying 50 v or higher.

3.5 Spare 4-20 mA output signal is designed for controllers with a non-grounded 4-20 mA input signal and a maximum input impedance of 500 ohms.

3.8 Flow devices to confirm evaporator or condenser pump flow are not required. However; if flow devices are used, wire as shown in diagram below. Remove jumper installed at these terminals and wire in a 4.3 K resistor in its place. The flow device and resistor must be installed in parallel at these terminals such that the resistor provides a signal when the flow device is open.

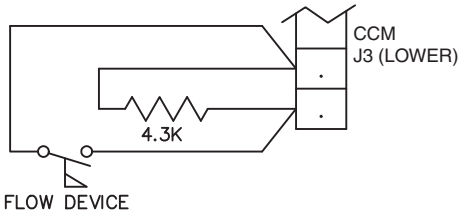

Free-Standing, Field-Installed Starter or VFD — Assemble and install compressor terminal box in desired orientation, and cut necessary conduit openings in conduit support plates. See Fig. 33-37. Attach power leads to compressor terminals in accordance with job wiring drawings, observing caution label in terminal box. Use only copper conductors. The motor must be grounded in accordance with NEC (National Electrical Code), applicable local codes, and job wiring diagrams. Installer is responsible for any damage caused by improper wiring between starter and compressor motor.

IMPORTANT: Do not insulate terminals until wiring arrangement has been checked and approved by Carrier start-up personnel. Also, make sure correct phasing is followed for proper motor rotation.

Insulate Motor Terminals and Lead Wire Ends — Insulate compressor motor terminals, lead wire ends, and electrical wires to prevent moisture condensation and electrical arcing. For low-voltage units (up to 600 v), obtain insulation material from machine shipping package consisting of 3 rolls of insulation putty and one roll of vinyl tape.

1. Insulate each terminal by wrapping with one layer of insulation putty.
2. Overwrap putty with 4 layers of vinyl tape.

High Voltage Units — High-voltage units require special terminal preparation. Follow local electrical codes for high-voltage installation. Vinyl tape is not acceptable; a high voltage terminal method must be used.

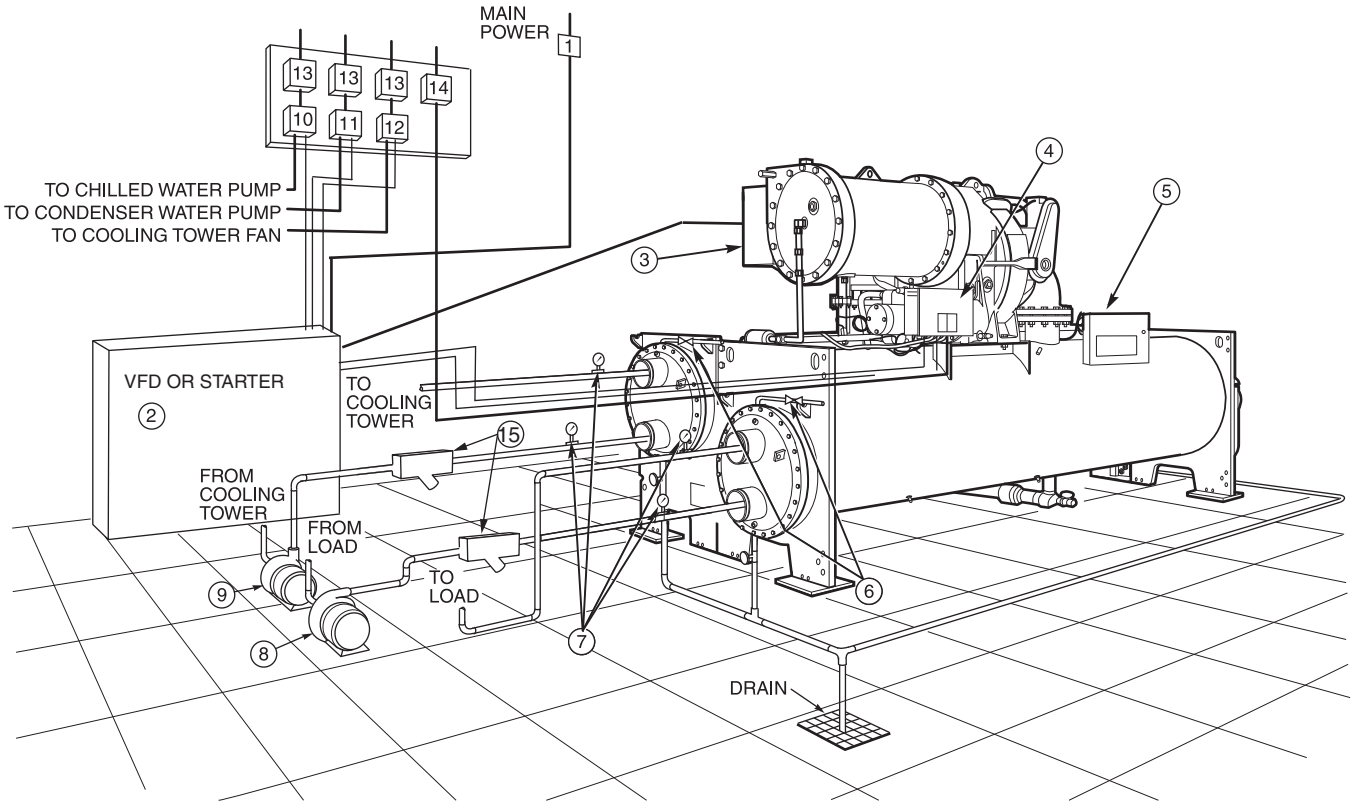

LEGEND

1 — Disconnect
2 — Free-standing Compressor Motor Starter
3 — Compressor Motor Terminal Box
4 — Power Panel
5 — Control Panel
6 — Vents
7 — Pressure Gages
8 — Chilled Water Pump
9 — Condenser Water Pump
10 — Chilled Water Pump Starter
11 — Condensing Water Pump Starter
12 — Cooling Tower Fan Starter (Low Fan, High Fan)
13 — Disconnect
14 — Oil Pump Disconnect (See Note 3)
15 — Strainers

Piping
Control Wiring
Power Wiring

IMPORTANT: Wiring and piping shown are for general point-of-connection only and are not intended to show details for a specific installation. Certified field wiring and dimensional diagrams are available on request.

NOTES:
1. All wiring must comply with applicable codes.
2. Wiring not shown for optional devices such as:
   - Remote Start/Stop
   - Remote Alarms
   - Optional Safety Device
   - 4 to 20 mA Resets
   - Optional Remote Sensors
3. Oil pump disconnect may be located within the enclosure of Item 2 — Free-standing Compressor Motor Starter.
4. IMPORTANT: Carrier suggests that a structural engineer be consulted if transmission of vibrations from mechanical equipment is of concern.
5. Isolation valves are recommended on the cooler and condenser piping to each chiller for service.

Fig. 33 — 19XR with Free-Standing Starter or VFD

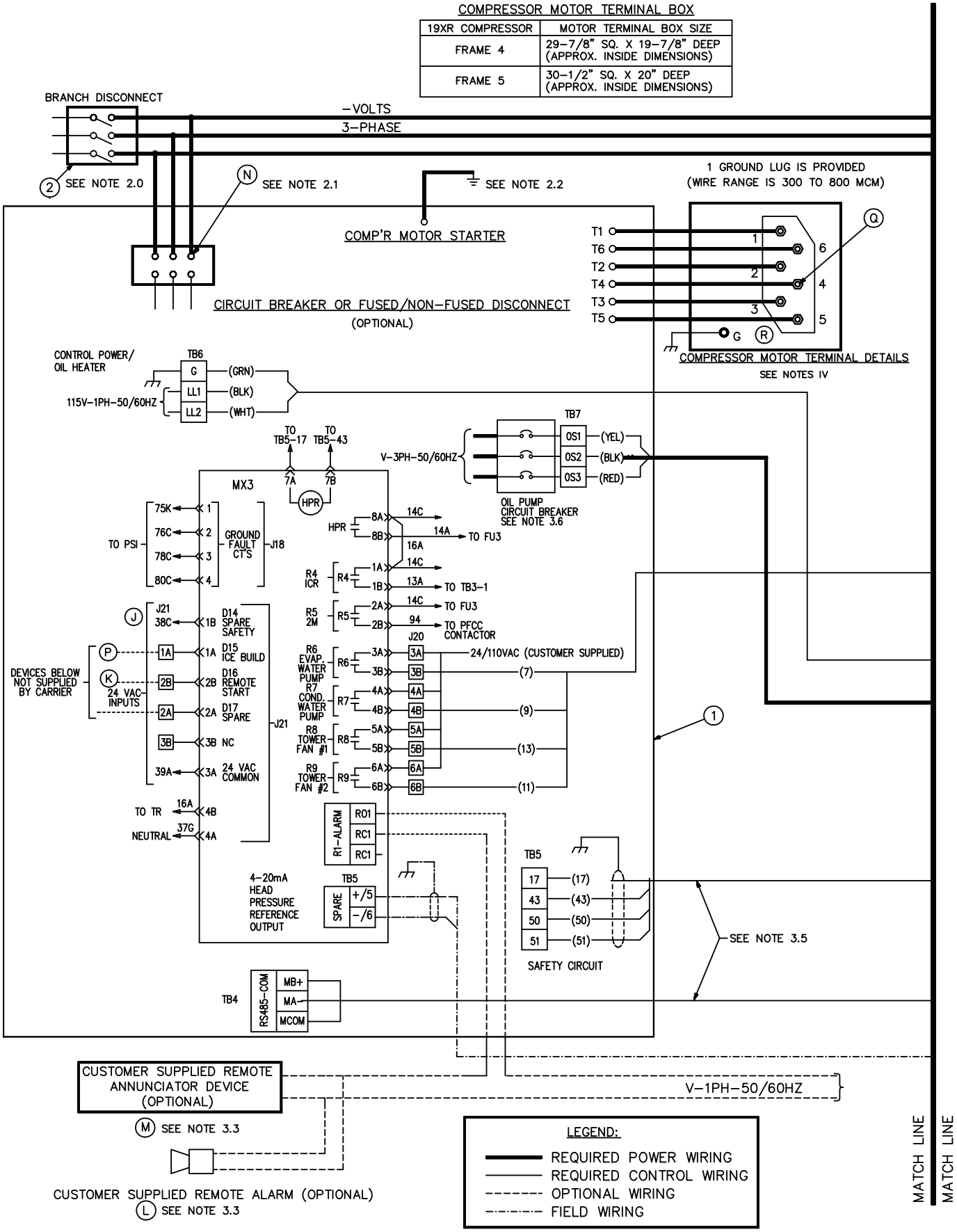

NOTE: See Legend on page 58.

Fig. 34 — 19XR Typical Field Wiring with Free-Standing Starter (Low Voltage)

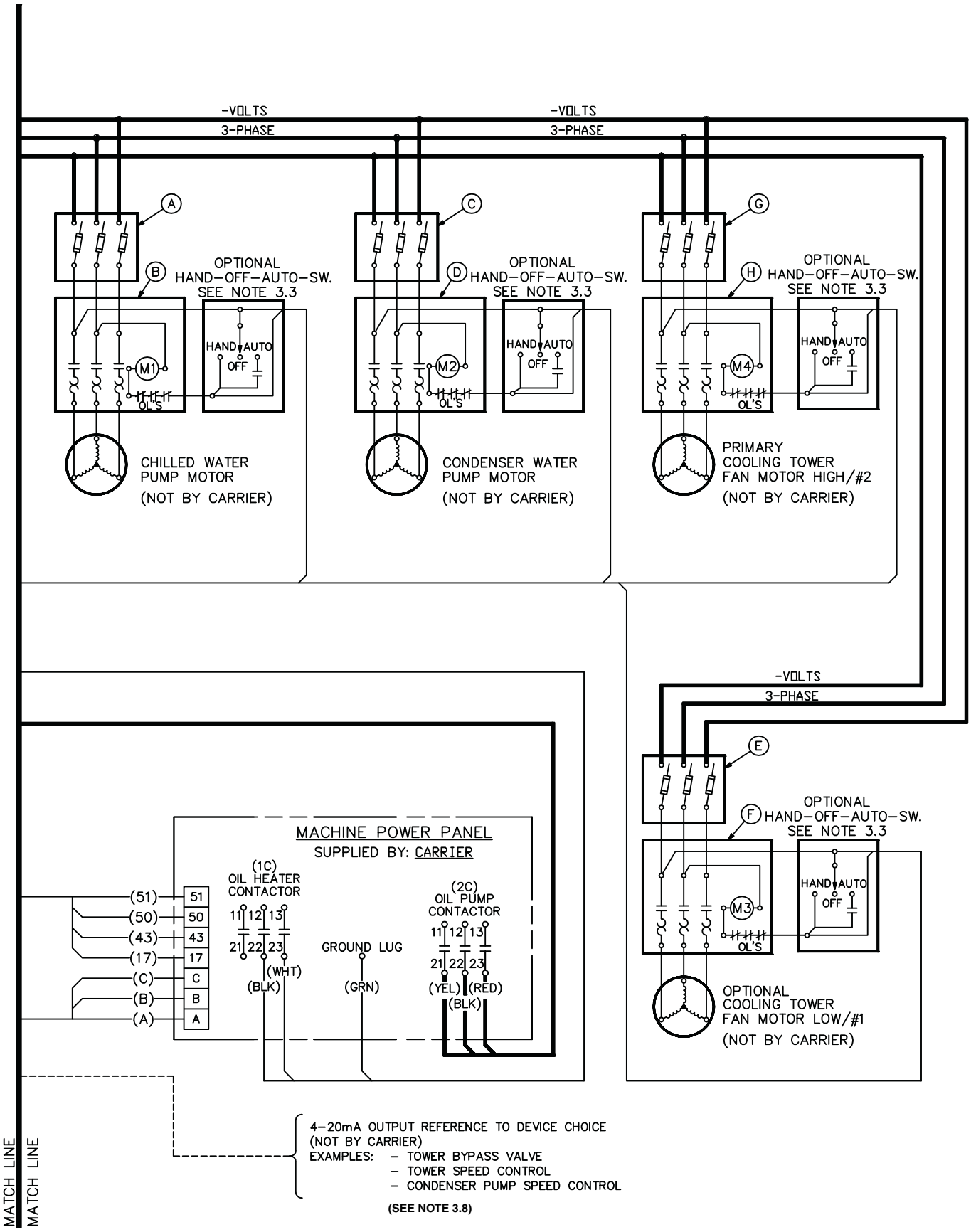

Fig. 34 — 19XR Typical Field Wiring with Free-Standing Starter (Low Voltage) (cont)

LEGEND FOR FIG. 34
19XR with Free-Standing Starter (Low Voltage)

REFERENCE NUMBER	EXPLANATION
1	3 Phase Under/Over Voltage
	Phase Loss/Imbalance/Reversal
	Motor Overload Protection
	Frequency Shift
	kW Transducer/kW Hours/Demand kW
	Single Cycle Dropout
	Motor/Starter Overcurrent
	Control Power Transformer (3KVA) (Integral)
	Controls and Oil Heater Circuit Breaker (integral)
	Oil Pump Circuit Breaker
	3 Phase Analog Volts/Amps Meter Package
	Power Factor Correction Package
	Lightning/Surge Arrestor Package
	Auxiliary Run Status Contacts N.O./N.C.
	Run Indicating Light
	Emergency Stop Switch
	Phase to Phase to Fault Detection
	Phase to Ground Fault Detection
2	Compressor Motor Starter Branch Disconnect
A	Evaporator Liquid Pump Starter Disconnect
B	Evaporator Liquid Pump Motor Starter
C	Condenser Liquid Pump Starter Disconnect
D	Condenser Liquid Pump Motor Starter
E	Cooling Tower Fan Motor Starter Disconnect (Low Fan/#1)
F	Cooling Tower Fan Motor Starter (Low Fan/#1)
G	Cooling Tower Fan Motor Starter Disconnect (High Fan/#2)
H	Cooling Tower Fan Motor Starter (High Fan/#2)
J	Spare Safety Devices [N.C.] See Note 3.1
K	Remote Start/Stop Device [N.O] See Note 3.1
L	Remote Alarm See Note 3.3
M	Remote Annunciator See Note 3.3
N	Lug Adapters See Note 2.1
P	Ice Build Start/Terminate Device See Note 3.1
Q	Lead Connectors See Note 4.0
R	6 Lead to 3 Lead Jumpers See Note 4.0

See Notes on page 59.

NOTES FOR FIG. 34
19XR with Free-Standing Starter (Low Voltage)

I. GENERAL

1.0 Starters shall be designed and manufactured in accordance with Carrier Engineering Requirement Z-415.

1.1 All field-supplied conductors, devices, and the field installation wiring, termination of conductors and devices, must be in compliance with all applicable codes and job specifications.

⚠ CAUTION

To prevent damage to machine, do NOT punch holes or drill into the top surface of the starter enclosure for field wiring. Knock-outs are provided on the side of the starter enclosure for field wiring connections.

1.2 The routing of field-installed conduit and conductors and the location of field-installed devices must not interfere with equipment access or the reading, adjusting, or servicing of any component.

1.3 Equipment installation and all starting and control devices, must comply with details in equipment submittal drawings and literature.

1.4 Contacts and switches are shown in the position they would assume with the circuit de-energized and the chiller shut-down.

1.5 WARNING — Do not use aluminum conductors.

1.6 Installer is responsible for any damage caused by improper wiring between starter and machine.

1.7 All field-installed wiring is field-supplied.

II. POWER WIRING TO STARTER

2.0 Provide a means of disconnecting power to starter.

2.1 Lug adapters may be required if installation conditions dictate that conductors be sized beyond the minimum ampacity required. Contact starter supplier for lug information.

2.2 Compressor motor and controls must be grounded by using equipment grounding lug provided inside starter enclosure.

III. CONTROL WIRING

3.0 Field-supplied control conductors to be at least 18 AWG or larger.

3.1 Ice build start/terminate device contacts, remote start/stop device contacts and spare safety device contacts (devices not supplied by Carrier), must have 24 VAC rating. MAX current is 60 mA, nominal current is 10 mA. Switches with gold plated bifurcated contacts are recommended.

3.2 Feed 24 VAC power to safety input terminals. Reference MX3 electrical drawings.

3.3 Each integrated contact output can control loads (VA) for evaporator pump, condenser pump, tower fan low, tower fan high, and alarm annunciator devices rated 5 amps at 115 VAC and up to 3 amps at 277 VAC.

⚠ CAUTION

Control wiring for Carrier to start pumps and tower fan motors and establish flows must be provided to assure machine protection. If primary pump, tower fan, and flow control is by other means, also provide parallel means for control by Carrier. Failure to do so could result in machine freeze-up or overpressure.

Do not use control transformers in the control center as the power source for external or field-supplied contactor coils, actuator motors or any other loads.

3.4 Do not route control wiring carrying 30 v or less within a conduit which has wires carrying 50 v or higher or along side wires carrying 50 v or higher.

3.5 Control wiring between starter and power panel must be separate shielded cables with minimum rating 600 v, 80 C. Ground shield at starter.

3.6 If optional pumpout/oil pump circuit breaker is not supplied within the starter enclosure, it must be located within sight of machine with wiring routed to suit.

3.7 When providing conductors for oil pump motor and oil heater power, refer to sizing data on label located on the chiller power panel, equipment submittal documentation or equipment product data catalog.

3.8 Spare 4-20 mA output signal is designed for controllers with a non-grounded 4-20 mA input signal and a maximum input impedance of 500 ohms.

IV. POWER WIRING BETWEEN FREE-STANDING STARTER AND COMPRESSOR MOTOR

4.0 Low voltage (600 v or less) compressor motors have (6) $^{5}/_{8}$ in. terminal studs (lead connectors not supplied by Carrier). Either 3 or 6 conductors must be run between compressor motor and starter, depending on the size of the conductors or the type of motor starter employed. If only 3 leads are utilized, jumper motor terminals as follows: 1 to 6, 2 to 4, 3 to 5. Center to center distance between terminals is 3-$^{5}/_{32}$ in. Compressor motor starter must have nameplate stamped as to conforming with Carrier Engineering requirement "Z-415."

4.1 Power conductor rating must meet minimum unit nameplate voltage and compressor motor RLA. Refer to the label located on the side of the chiller control panel, equipment submittal documentation or equipment product data catalog for conductor sizing data. (Conductor as defined below may be a single lead or multiple smaller ampacity leads in parallel for the purpose of carrying the equivalent or higher current of a single larger lead.)

When (3) conductors are used:

Minimum ampacity per conductor = 1.25 x compressor RLA

When (6) conductors are used:

Minimum ampacity per conductor = 0.721 x compressor RLA

4.2 When more than one conduit is used to run conductors from starter to compressor motor terminal box, an equal number of leads from the following phases (conductor) must be installed in each conduit to prevent excessive heating.
Inside delta starters: 1, 3, or multiples of 3 conduits are required. (For example: conductors to motor terminals 1, 2, 3, 4, 5 and 6 in a single conduit or conductors to motor terminals 1 and 4 in one conduit, conductors to motor terminals 2 and 5 in one conduit and conductors to motor terminals 3 and 6 in one conduit.)
For all other starters: 1, 2, or multiples of 2 are required. (For example: conductors to motor terminals 1, 2, and 3 in one conduit, and conductors to motor terminals 4, 5, and 6 in one conduit).

4.3 Compressor motor power conductors may enter terminal box through top, left side or bottom left using holes cut by contractor to suit conduit. Flexible conduit should be used for the last few feet to the terminal box for unit vibration isolation. Use of stress cones or 12 conductors larger than 500 MCM may require an oversize (special) motor terminal box (not supplied by Carrier). Lead connections between 3-phase motors and their starters must not be insulated until Carrier personnel have checked compressor and oil pump rotations.

4.4 Compressor motor frame to be grounded in accordance with the National Electrical Code (NFPA-70) and applicable codes. Means for grounding compressor motor is pressure connector for #4 AWG to 500 MCM wire, supplied and located in the lower left side corner of the compressor motor terminal box.

4.5 Do not allow motor terminals to support weight of wire cables. Use cable supports and strain reliefs as required.

4.6 Use backup wrench when tightening lead connectors to motor terminal studs. Torque to 45 lb-ft max.

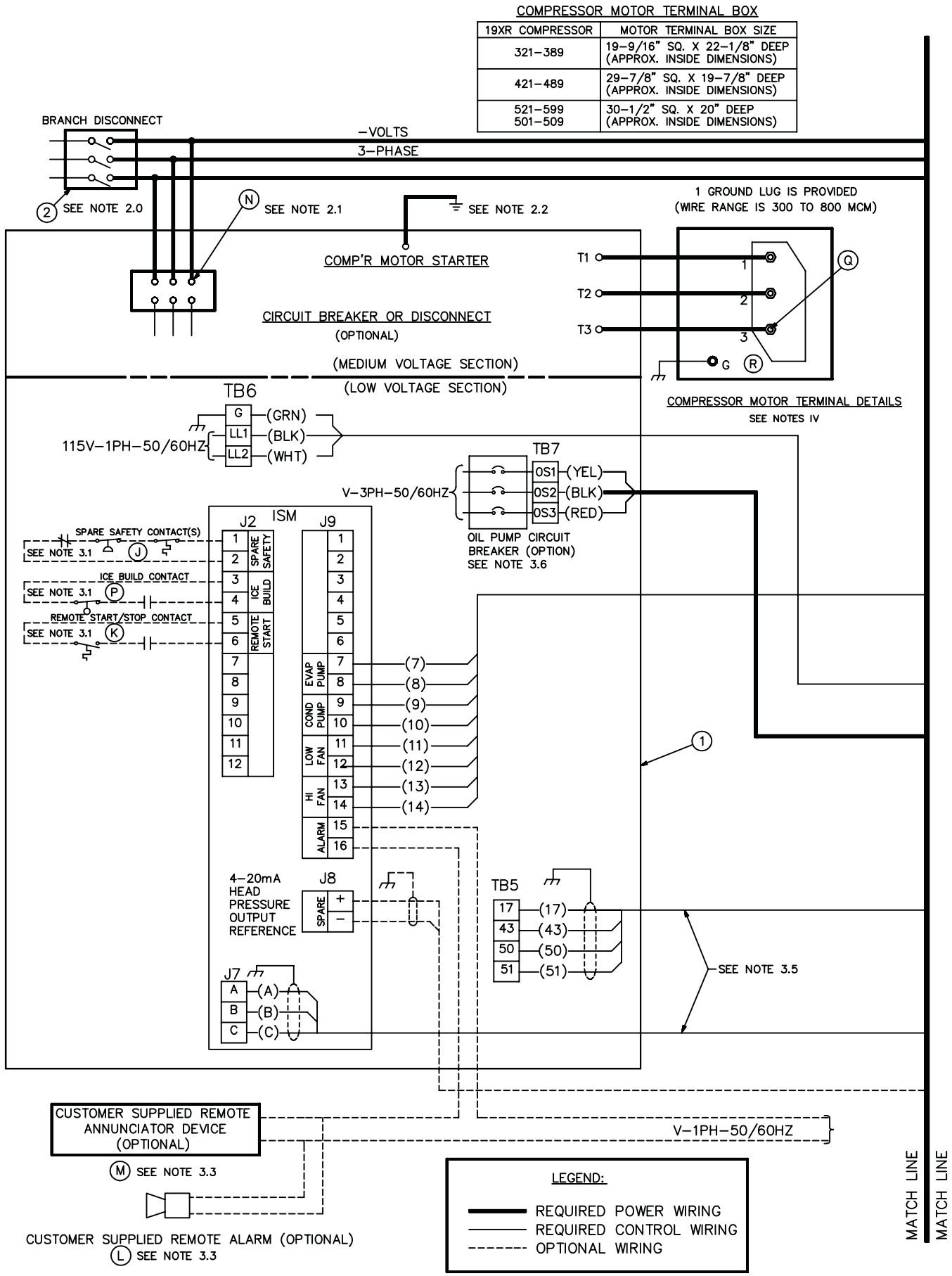

NOTE: See Legend on page 62.

Fig. 35 — 19XR Typical Field Wiring with Free-Standing Starter (Medium Voltage)

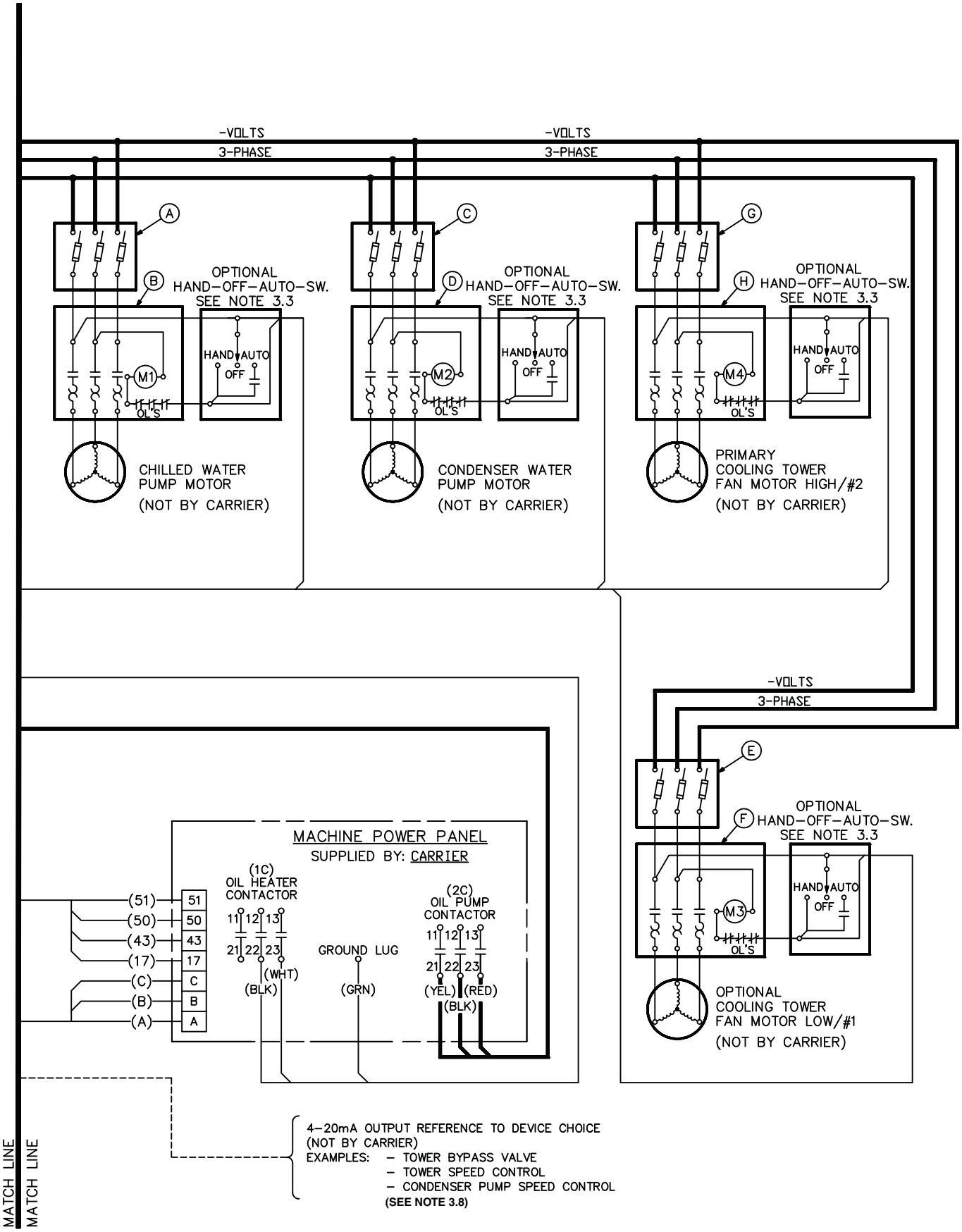

Fig. 35 — 19XR Typical Field Wiring with Free-Standing Starter (Medium Voltage) (cont)

LEGEND FOR FIG. 35
19XR with Free-Standing Starter (Medium Voltage)

REFERENCE NUMBER	EXPLANATION
1	3 Phase Under/Over Voltage
	Phase Loss/Imbalance/Reversal
	Motor Overload Protection
	Frequency Shift
	kW Transducer/kW Hours/Demand kW
	Single Cycle Dropout
	Motor/Starter Overcurrent
	Control Power Transformer (3KVA) (Integral)
	Controls and Oil Heater Circuit Breaker (integral)
	Oil Pump Circuit Breaker
	Oil Pump Circuit Breaker with Transformer
	3 Phase Analog Volts/Amps Meter Package
	Power Factor Correction Package
	Lightning/Surge Arrestor Package
	Auxiliary Run Status Contacts N.O./N.C.
	Run Indicating Light
	Emergency Stop Switch
	Phase to Ground Fault Detection
2	Compressor Motor Starter Branch Disconnect
A	Evaporator Liquid Pump Starter Disconnect
B	Evaporator Liquid Pump Motor Starter
C	Condenser Liquid Pump Starter Disconnect
D	Condenser Liquid Pump Motor Starter
E	Cooling Tower Fan Motor Starter Disconnect (Low Fan/#1)
F	Cooling Tower Fan Motor Starter (Low Fan/#1)
G	Cooling Tower Fan Motor Starter Disconnect (High/#2)
H	Cooling Tower Fan Motor Starter (High Fan/#2)
J	Spare Safety Devices [N.C.] See Note 3.1
K	Remote Start/Stop Device [N.O] See Note 3.1
L	Remote Alarm See Note 3.3
M	Remote Annunciator See Note 3.3
N	Lug Adapters See Note 2.1
P	Ice Build Start/Terminate Device See Note 3.1
Q	Lead Connectors See Note 4.0
R	6 Lead to 3 Lead Jumpers See Note 4.0

See Notes on page 63.

NOTES FOR FIG. 35
19XR with Free-Standing Starter (Medium Voltage)

I. GENERAL

1.0 Starters shall be designed and manufactured in accordance with Carrier Engineering Requirement Z-415.

1.1 All field-supplied conductors, devices, and the field installation wiring, termination of conductors and devices, must be in compliance with all applicable codes and job specifications.

⚠ CAUTION

To prevent damage to machine, do NOT punch holes or drill into the top surface of the starter enclosure for field wiring. Knock-outs are provided on the side of the starter enclosure for field wiring connections.

1.2 The routing of field-installed conduit and conductors and the location of field-installed devices must not interfere with equipment access or the reading, adjusting, or servicing of any component.

1.3 Equipment installation and all starting and control devices, must comply with details in equipment submittal drawings and literature.

1.4 Contacts and switches are shown in the position they would assume with the circuit de-energized and chiller shutdown.

1.5 WARNING — Do not use aluminum conductors.

1.6 Installer is responsible for any damage caused by improper wiring between starter and machine.

1.7 All field-installed wiring is field-supplied.

II. POWER WIRING TO STARTER

2.0 Provide a means of disconnecting power to starter.

2.1 Lug adapters may be required if installation conditions dictate that conductors be sized beyond the minimum ampacity required. Contact starter supplier for lug information.

2.2 Compressor motor and controls must be grounded by using equipment grounding lug provided inside starter enclosure.

III. CONTROL WIRING

3.0 Field-supplied control conductors to be at least 18 AWG or larger.

3.1 Ice build start/terminate device contacts, remote start/stop device contacts and spare safety device contacts (devices not supplied by Carrier), must have 24 VAC rating. MAX current is 60 mA, nominal current is 10 mA. Switches with gold plated bifurcated contacts are recommended.

3.2 Remove jumper wire between J2-1 and J2-2 before connecting auxiliary safeties between these terminals.

3.3 Each integrated contact output can control loads (VA) for evaporator pump, condenser pump, tower fan low, tower fan high, and alarm annunciator devices rated 5 amps at 115 VAC and up to 3 amps at 277 VAC.

⚠ CAUTION

Control wiring for Carrier to start pumps and tower fan motors and establish flows must be provided to assure machine protection. If primary pump, tower fan, and flow control is by other means, also provide parallel means for control by Carrier. Failure to do so could result in machine freeze-up or overpressure.

Do not use control transformers in the control center as the power source for external or field-supplied contactor coils, actuator motors or any other loads.

3.4 Do not route control wiring carrying 30 v or less within a conduit which has wires carrying 50 v or higher or along side wires carrying 50 v or higher.

3.5 Control wiring between starter and power panel must be separate shielded cables with minimum rating 600 v, 80 C. Ground shield at starter.

3.6 If optional pumpout/oil pump circuit breaker is not supplied within the starter enclosure, it must be located within sight of machine with wiring routed to suit.

3.7 When providing conductors for oil pump motor and oil heater power, refer to sizing data on label located on the chiller power panel, equipment submittal documentation or equipment product data catalog.

3.8 Spare 4-20 mA output signal is designed for controllers with a non-grounded 4-20 mA input signal and a maximum input impedance of 500 ohms.

IV. POWER WIRING BETWEEN FREE-STANDING STARTER AND COMPRESSOR MOTOR

4.0 Medium voltage (over 600 volts) compressor motors have (3) terminals. Connections are $^{9}/_{16}$-in. threaded stud. A compression lug with a single $^{9}/_{16}$-in. diameter hole can be connected directly to the stud or 3 adapters are supplied for connecting a NEMA lug. Use suitable connectors and insulation for high voltage alternating current cable terminations (these items are not supplied by Carrier). Compressor motor starter must have nameplate stamped as to conforming with Carrier Engineering requirement "Z-415."

4.1 Power conductor rating must meet minimum unit nameplate voltage and compressor motor RLA. Refer to the label located on the side of the chiller control panel, equipment submittal documentation or equipment product data catalog for conductor sizing data. (Conductor as defined below may be a single lead or multiple smaller ampacity leads in parallel for the purpose of carrying the equivalent or higher current of a single larger lead.)

When (3) conductors are used:

Minimum ampacity per conductor = 1.25 x compressor RLA

4.2 When more than one conduit is used to run conductors from starter to compressor motor terminal box, an equal number of leads from each phase (conductor) must be in each conduit to prevent excessive heating. (For example, conductors to motor terminals 1, 2, and 3 in one conduit, and those to 4, 5, and 6 in another).

4.4 Compressor motor power conductors may enter terminal box through top, left side or bottom left using holes cut by contractor to suit conduit. Flexible conduit should be used for the last few feet to the terminal box for unit vibration isolation. Use of stress cones may require an oversize (special) motor terminal box (not supplied by Carrier).

4.3 Compressor motor frame to be grounded in accordance with the National Electrical Code (NFPA-70) and applicable codes. Means for grounding compressor motor is a #4 AWG to 500 MCM pressure connector, supplied and located in the lower left side corner of the compressor motor terminal box.

4.5 Do not allow motor terminals to support weight of wire cables. Use cable supports and strain reliefs as required.

4.6 Use backup wrench when tightening lead connectors to motor terminal studs. Torque to 30-35 ft-lb max.

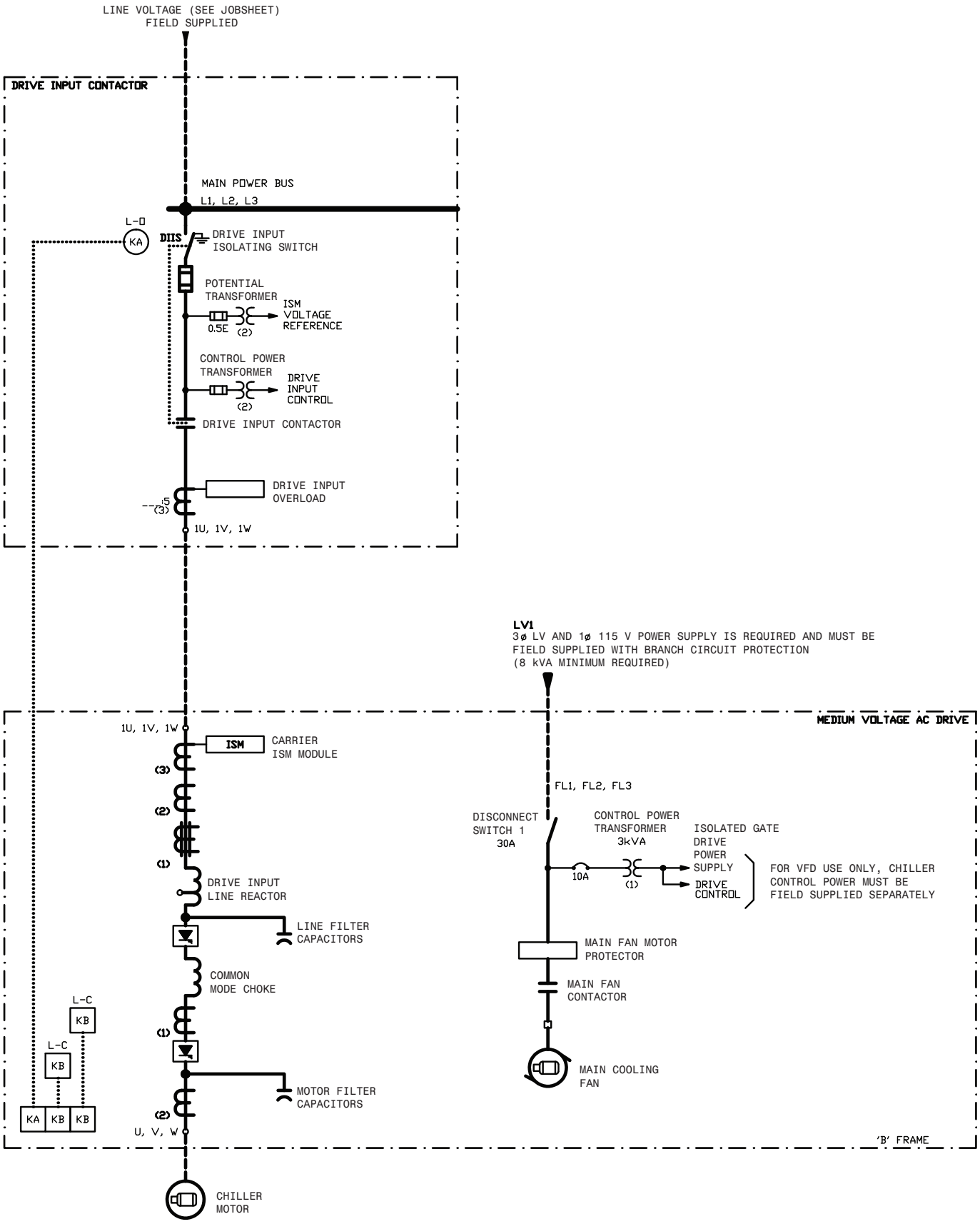

NOTE: See Legend on page 67.

Fig. 36 — 19XR Typical Field Wiring with Free-Standing Starter (Medium Voltage VFD)

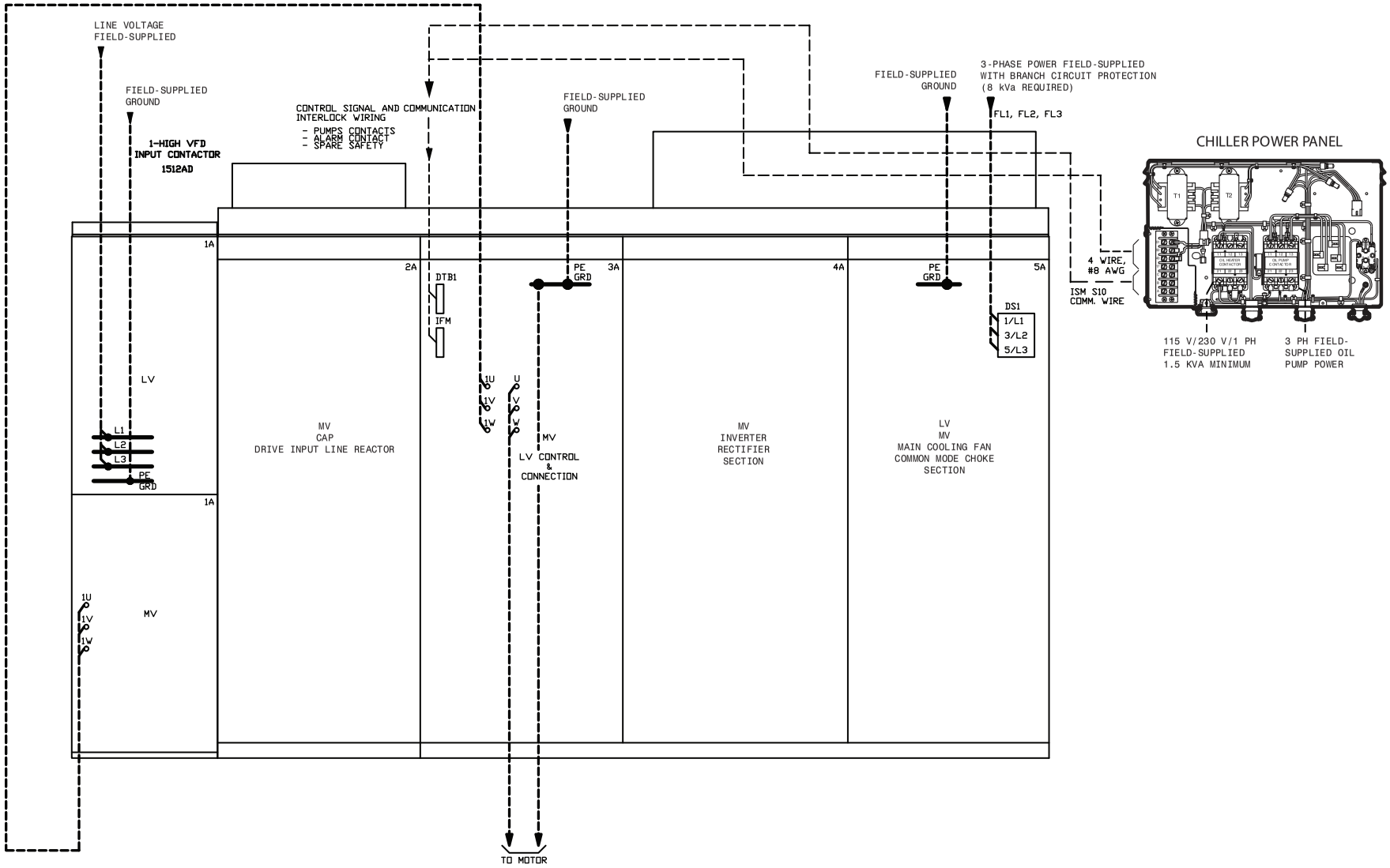

NOTE: See Legend on page 67.

Fig. 36 — 19XR Typical Field Wiring with Free-Standing Starter (Medium Voltage VFD) (cont)

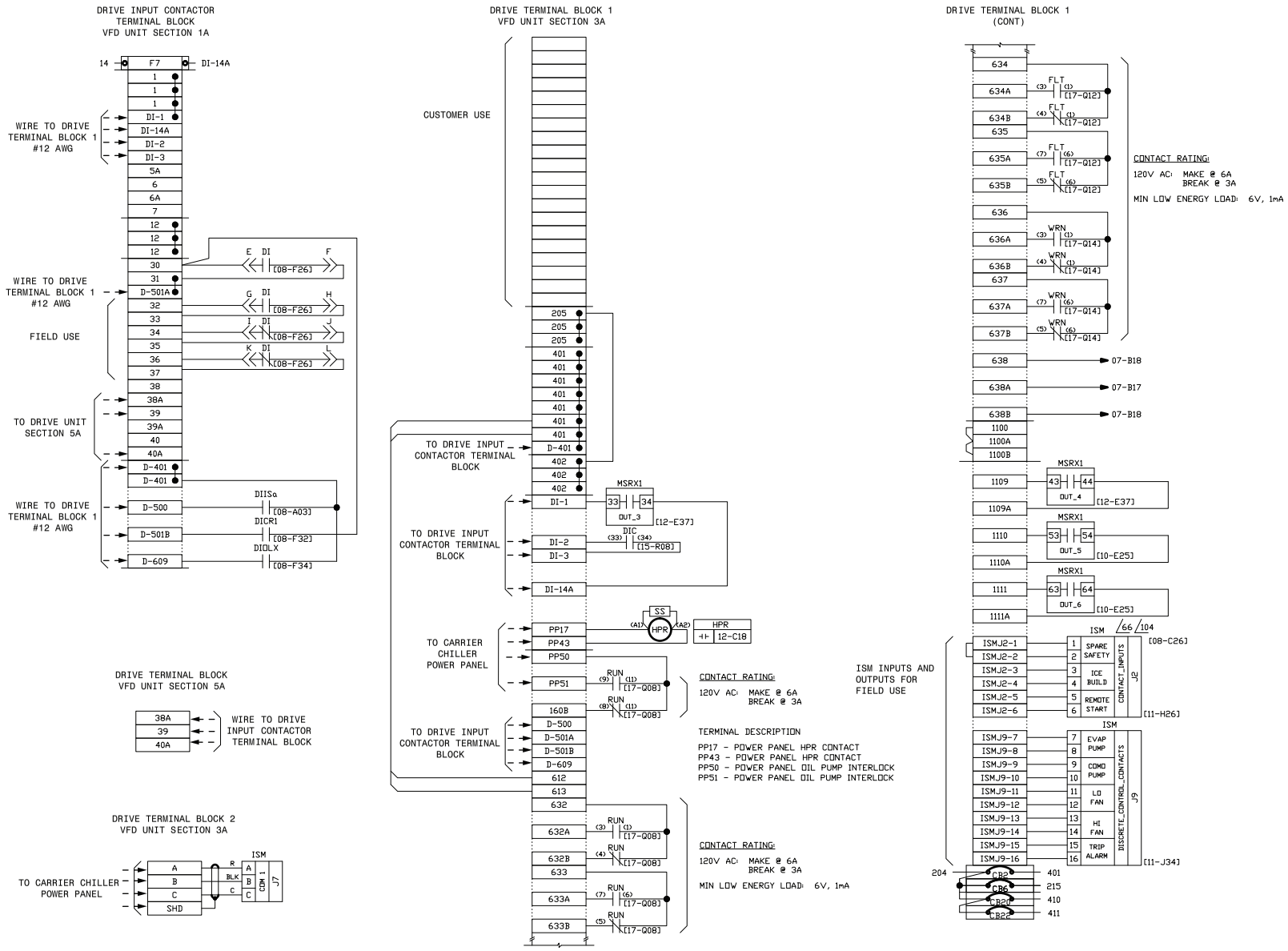

NOTE: See Legend on page 67.

Fig. 36 — 19XR Typical Field Wiring with Free-Standing Starter (Medium Voltage VFD) (cont)

LEGEND FOR FIG. 36
19XR with Free-Standing Starter (Medium Voltage VFD)

AWG — American Wire Gage
CBx — Circuit Breaker
DI — Drive Input Contactor
DIC — Drive Input Control Relay
DICR1 — Drive Input Contactor Pilot Relay
DIIS — Drive Input Isolating Switch
DIOLx — Drive Input Overload Auxiliary Relay
DITB — Drive Input Contactor Terminal Blocks
DSx — Disconnect Switch
FLT — Fault Relay
GRD — Ground
HPR — High Pressure Relay
IFM — Interface Module
ISM — Integrated Starter Module
L-C — Locked Closed
L-O — Locked Open
LV — Low Voltage
LVx — External Low Voltage Supply
MSRXx — Monitoring Safety Relay Auxiliary Relay x
MV — Medium Voltage
PE — Earth Ground
PP — Carrier Power Panel
RUN — Run Relay
SS — Surge Suppressor
VFD — Variable Frequency Drive
WRN — Warning Relay

66 Carrier ISM to be programmed by Carrier before start-up. Relay contacts shown without signal power applied.

104 Located in drive low voltage control section. Wire with #12 AWG.

WIRING

Factory Wiring

Field Wiring

Mechanically Connected

Conductor, Crossing of Paths or Conductors Not Connected

Conductor, Junction of Connected Paths, Conductors or Wires

Conductor, Separable or Jacks Engaged

Terminal

Terminal (Rockwell Automation use only)

Terminal Blocks
— Barrier

2-A01 Wired To/From Destination

SWITCHES AND INPUT DEVICES

Contact Normally Open (Make)

Contact Normally Closed (Break)

OUTPUT DEVICES

Fan (3 Phase Induction Motor)

Induction Machine

RESISTORS, CAPS, WINDINGS AND GROUND

Capacitor

Winding

Transformer, Current

PROTECTION

Circuit Breaker, Control/Power

Fuse, Control/Power

SS Surge Suppressor

POWER ELECTRONIC DEVICES

Symmetrical Gate-Commutated Thyristor and Gate Driver Board

MISCELLANEOUS

Note Number Indicator

RELAY 02-A01 CONTACT TYPE SHEET ZONE Contact Location Description

2-A01 SHEET ZONE Relay Location Description

K Key Interlock on Isolation Switch

K Key Interlock on MV Door

K K Multiple Barrel Key Interlock on Isolation Switch

K K Multiple Barrel Key Interlock on MV Door

K K K K Transfer Block

See Notes on page 68.

NOTES FOR FIG. 36
19XR with Free-Standing Starter (Medium Voltage VFD)

I. GENERAL

1.0 Variable Frequency Drive (VFD) shall be designed and manufactured in accordance with Carrier Engineering Requirement Z-416.

1.1 All field-supplied conductors, devices, and the field installation wiring, termination of conductors and devices, must be in compliance with all applicable codes and job specifications.

⚠ CAUTION

To prevent damage to machine, do NOT punch holes or drill into the top surface of the VFD enclosure for field wiring. Field wiring knockouts are provided on the top and side of the VFD enclosure for field wiring connections.

1.2 The routing of field-installed conduit and conductors and the location of field-installed devices must not interfere with equipment access or the reading, adjusting, or servicing of any component.

1.3 Equipment installation and all starting and control devices, must comply with details in equipment submittal drawings and literature.

1.4 Contacts and switches are shown in the position they would assume with the circuit de-energized and chiller shutdown.

1.5 WARNING - Do not use aluminum conductors.

1.6 Installer is responsible for any damage caused by improper wiring between VFD and machine.

1.7 All field-installed wiring is field-supplied.

II. POWER WIRING TO VFD

2.0 Provide a means of disconnecting power to VFD.

2.1 Lug adapters may be required if installation conditions dictate that conductors be sized beyond the minimum ampacity required. Contact VFD supplier for lug information.

2.2 Compressor motor and controls must be grounded by using equipment grounding lug provided inside VFD enclosure.

III. CONTROL WIRING

3.0 Field-supplied control conductors to be at least 18 AWG or larger.

3.1 Optional Ice build start/terminate device contacts, optional remote start/stop device contacts and optional spare safety device contacts (devices not supplied by Carrier), must have 24 VAC rating. MAX current is 60 mA, nominal current is 10 mA. Switches with gold plated bifurcated contacts are recommended.

3.2 Remove jumper wire between ISM J2-1 and ISM J2-2 before connecting auxiliary safeties between these terminals.

3.3 Each integrated contact output can control loads (VA) for evaporator pump, condenser pump, tower fan low, tower fan high, and alarm annunciator devices rated 5 amps at 115 VAC and up to 3 amps at 277 VAC.

⚠ CAUTION

Control wiring for Carrier to start pumps and tower fan motors and establish flows must be provided to assure machine protection. If primary pump, tower fan, and flow control is by other means, also provide parallel means for control by Carrier. Failure to do so could result in machine freeze-up or overpressure.

Do not use control transformers in the control center as the power source for external or field-supplied contactor coils, actuator motors or any other loads.

3.4 Do not route control wiring carrying 30 v or less within a conduit which has wires carrying 50 v or higher or along side wires carrying 50 v or higher.

3.5 Control wiring between VFD and power panel must be separate shielded cables with minimum rating 600 v, 80 C. Ground shield at VFD.

3.6 If optional pumpout/oil pump circuit breaker is not supplied within the starter enclosure, it must be located within sight of machine with wiring routed to suit.

3.7 When providing conductors for oil pump motor and oil heater power, refer to sizing data on label located on the chiller power panel, equipment submittal documentation or equipment product data catalog.

3.8 Spare 4-20 mA output signal is designed for controllers with a non-grounded 4-20 mA input signal and a maximum input impedance of 500 ohms.

IV. POWER WIRING BETWEEN FREE-STANDING VFD AND COMPRESSOR MOTOR

4.0 Medium voltage (over 600 volts) compressor motors have (3) terminals. Connections are $^{9}/_{16}$-in. threaded stud. A compression lug with a single $^{9}/_{16}$-in. diameter hole can be connected directly to the stud or 3 adapters are supplied for connecting a NEMA lug. Use suitable connectors and insulation for high voltage alternating current cable terminations (these items are not supplied by Carrier). Compressor motor starter must have nameplate stamped as to conforming with Carrier Engineering requirement "Z-416."

4.1 Power conductor rating must meet minimum unit nameplate voltage and compressor motor RLA. Refer to the label located on the side of the chiller control panel, equipment submittal documentation or equipment product data catalog for conductor sizing data. (Conductor as defined below may be a single lead or multiple smaller ampacity leads in parallel for the purpose of carrying the equivalent or higher current of a single larger lead.)

When (3) conductors are used:

Minimum ampacity per conductor = 1.25 x compressor RLA

When (6) conductors are used:

Minimum ampacity per conductor = 1.25 x compressor RLA/2

4.2 When more than one conduit is used to run conductors from VFD to compressor motor terminal box, an equal number of leads from each phase (conductor) must be in each conduit to prevent excessive heating. (For example, conductors to motor terminals 1, 2, and 3 in one conduit, and to 1, 2, and 3 in another conduit).

4.4 Compressor motor power conductors may enter terminal box through top, left side or bottom left using holes cut by contractor to suit conduit. Flexible conduit should be used for the last few feet to the terminal box for unit vibration isolation. Use of stress cones may require an oversize (special) motor terminal box (not supplied by Carrier).

4.3 Compressor motor frame to be grounded in accordance with the National Electrical Code (NFPA-70) and applicable codes. Means for grounding compressor motor is a #4 AWG to 500 MCM pressure connector, supplied and located in the lower left side corner of the compressor motor terminal box.

4.5 Do not allow motor terminals to support weight of wire cables. Use cable supports and strain reliefs as required.

4.6 Use backup wrench when tightening lead connectors to motor terminal studs. Torque to 30-35 ft-lb max.

4.7 Do not exceed 100 ft. maximum power cable length between the VFD and motor terminals without consulting Carrier for special requirements.

LEGEND FOR FIG. 37
19XR with Free-Standing Low Voltage VFD

REFERENCE NUMBER	EXPLANATION
1	3 Phase Under/Over Voltage
	Phase Loss/Imbalance/Reversal
	Motor Overload Protection
	Frequency Shift
	kW Transducer/kW Hours/Demand kW
	Single Cycle Dropout
	Motor/Starter Overcurrent
	Control Power Transformer (3KVA) (Integral)
	Controls and Oil Heater Circuit Breaker (integral)
	Oil Pump Circuit Breaker (Integral)
	Phase to Ground Fault Protection
	3 Phase Analog Volts/Amps Meter Package
	Power Factor Correction Package
	Lightning/Surge Arrestor Package
	Line Reactor (See Fig. 31)
	Passive Line Filter
	12 Pulse Input Section
	Run Indicating Light
	Emergency Stop Switch
2	Compressor Motor Starter Branch Disconnect
A	Evaporator Liquid Pump Starter Disconnect
B	Evaporator Liquid Pump Motor Starter
C	Condenser Liquid Pump Starter Disconnect
D	Condenser Liquid Pump Motor Starter
E	Cooling Tower Fan Motor Starter Disconnect (Low Fan/#1)
F	Cooling Tower Fan Motor Starter (Low Fan/#1)
G	Cooling Tower Fan Motor Starter Disconnect (High Fan/#2)
H	Cooling Tower Fan Motor Starter (High Fan/#2)
J	Spare Safety Devices [N.C.] See Note 3.1
K	Remote Start/Stop Device [N.O] See Note 3.1
L	Remote Alarm See Note 3.3
M	Remote Annunciator See Note 3.3
N	Lug Adapters See Note 2.1
P	Ice Build Start/Terminate Device See Note 3.1
Q	Lead Connectors See Note 4.0
R	6 Lead to 3 Lead Jumpers See Note 4.0

See Notes on page 72.

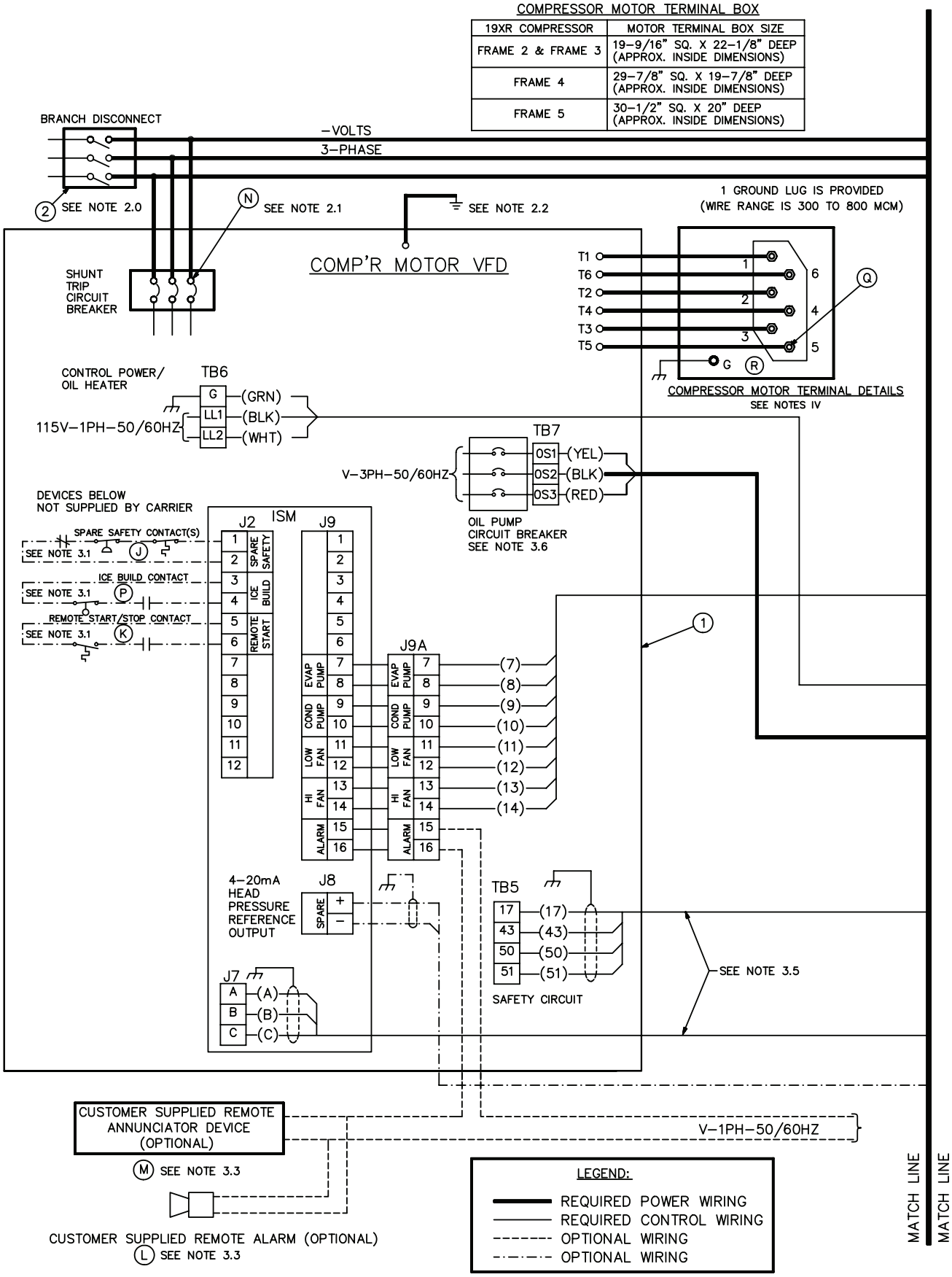

NOTE: See Legend on page 69.

Fig. 37 — 19XR Typical Field Wiring with Free-Standing Low Voltage VFD

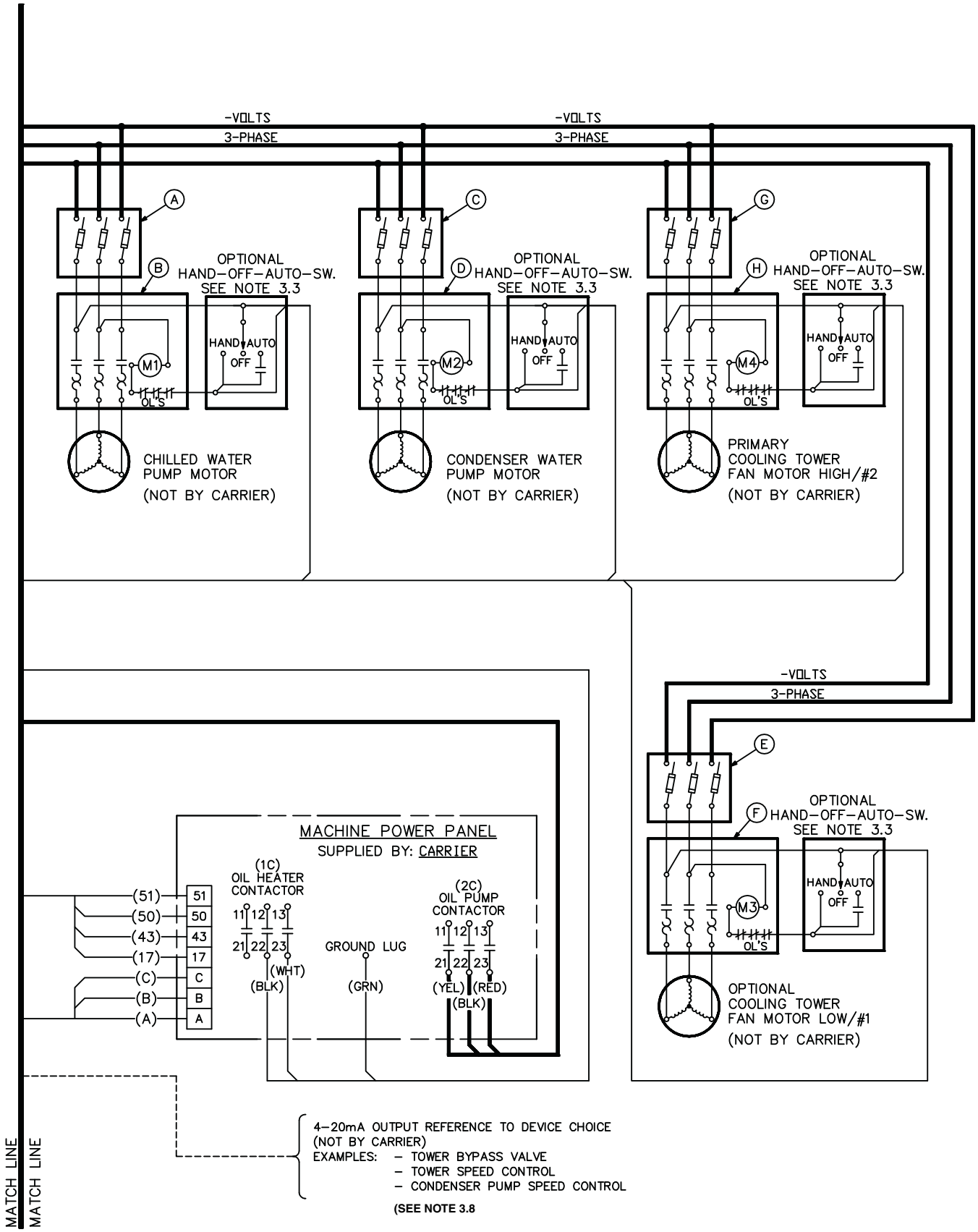

Fig. 37 — 19XR Typical Field Wiring with Free-Standing Low Voltage VFD (cont)

NOTES FOR FIG. 37
19XR with Free-Standing Low Voltage VFD

I. GENERAL

1.0 Variable frequency drive (VFD) shall be designed and manufactured in accordance with Carrier Engineering Requirement Z-416.

1.1 All field-supplied conductors, devices, and the field-installation wiring, termination of conductors and devices, must be in compliance with all applicable codes and job specifications.

⚠ CAUTION

To prevent damage to machine, do NOT punch holes or drill into the top surface of the VFD enclosure for field wiring. Knockouts are provided on the side of the VFD enclosure for field wiring connections.

1.2 The routing of field-installed conduit and conductors and the location of field-installed devices must not interfere with equipment access or the reading, adjusting, or servicing of any component.

1.3 Equipment installation and all starting and control devices, must comply with details in equipment submittal drawings and literature.

1.4 Contacts and switches are shown in the position they would assume with the circuit de-energized and the chiller shut down.

1.5 WARNING — Do not use aluminum conductors.

1.6 Installer is responsible for any damage caused by improper wiring between VFD and machine.

1.7 All field-installed wiring is field-supplied.

II. POWER WIRING TO VFD

2.0 Provide a local means of disconnecting power to VFD.

2.1 Lug adapters may be required if installation conditions dictate that conductors be sized beyond the minimum ampacity required. Refer to VFD dimensional drawings for lug information.

2.2 Compressor motor and controls must be grounded by using equipment grounding lugs provided inside VFD enclosure.

III. CONTROL WIRING

3.0 Field-supplied control conductors to be at least 18 AWG or larger.

3.1 Optional ice build start/terminate device contacts, optional remote start/stop device contacts and optional spare safety device contacts, must have 24 VAC rating. MAX current is 60 mA, nominal current is 10 mA. Switches with gold plated bifurcated contacts are recommended.

3.2 Remove jumper wire between J2-1 and J2-2 before connecting auxiliary safeties between these terminals.

3.3 Each integrated contact output can control loads (VA) for evaporator pump, condenser pump, tower fan low, tower fan high, and alarm annunciator devices rated 5 amps at 115 VAC and up to 3 amps at 277 VAC.

⚠ CAUTION

Control wiring for Carrier to start pumps and tower fan motors and establish flows must be provided to assure machine protection. If primary pump, tower fan, and flow control is by other means, also provide parallel means for control by Carrier. Failure to do so could result in machine freeze-up or overpressure.

Do not use control transformers in the control center as the power source for external or field-supplied contactor coils, actuator motors or any other loads.

3.4 Do not route control wiring carrying 30 v or less within a conduit which has wires carrying 50 v or higher or along side wires carrying 50 v or higher.

3.5 Control wiring between VFD and power panel must be separate shielded cables with minimum rating 600 v, 80 C. Ground shield at VFD.

3.6 If optional pumpout/oil pump circuit breaker is not supplied within the starter enclosure, it must be located within sight of machine with wiring routed to suit.

3.7 When providing conductors for oil pump motor and oil heater power, refer to sizing data on label located on the chiller power panel, equipment submittal documentation or equipment product data catalog.

3.8 Spare 4-20 mA output signal is designed for controllers with a non-grounded 4-20 mA input signal and a maximum input impedance of 500 ohms.

IV. POWER WIRING BETWEEN FREE-STANDING VFD AND COMPRESSOR MOTOR

4.0 Low voltage (600 v or less) compressor motors have (6) $^{5}/_{8}$ in. terminal studs with 19XR frame 2 and 3 compressor or (6) $^{7}/_{8}$ -in. terminal studs with 19XR frame 4 and 5 compressor (lead connectors not supplied by Carrier). Either 3 or 6 leads must be run between compressor motor and VFD, depending on the size of the conductors or the type of motor starter employed. If only 3 leads are utilized, jumper motor terminals as follows: 1 to 6, 2 to 4, 3 to 5. Center to center distance between frame 2 and 3 compressor terminals is 3-$^{5}/_{32}$ inches. Center to center distance between frame 4 and 5 compressor terminals is 4-$^{13}/_{16}$ inches. Compressor motor VFD must have nameplate stamped as to conforming with Carrier Engineering requirement “Z-416.”

4.1 Power conductor rating must meet minimum unit nameplate voltage and compressor motor RLA. Refer to the label located on the side of the chiller control panel, equipment submittal documentation or equipment product data catalog for conductor sizing data. (Conductor as defined below may be a single lead or multiple smaller ampacity leads in parallel for the purpose of carrying the equivalent or higher current of a single larger lead.)

When (3) conductors are used:

Minimum ampacity per conductor = 1.25 x compressor RLA

When (6) conductors are used:

Minimum ampacity per conductor = 1.25 x compressor RLA / 2.

4.2 When more than one conduit is used to run conductors from VFD to compressor motor terminal box, an equal number of leads from each phase (conductor) must be in each conduit to prevent excessive heating. (For example, conductors to motor terminals 1, 2, and 3 in one conduit, and conductors to motor terminals 4, 5, and 6 in another).

4.3 Compressor motor power conductors may enter terminal box through top, left side or bottom left using holes cut by contractor to suit conduit. Flexible conduit should be used for the last few feet to the terminal box for unit vibration isolation. Use of stress cones or 12 conductors larger than 500 MCM may require an oversize (special) motor terminal box (not supplied by Carrier). Lead connections between 3-phase motors and VFD must not be insulated until Carrier personnel have checked compressor and oil pump rotations.

4.4 Compressor motor frame to be grounded in accordance with the National Electrical Code (NFPA-70) and applicable codes. Means for grounding compressor motor is a pressure connector for #4 AWG to wire, supplied and located in the lower left side corner of the compressor motor terminal box.

4.5 Do not allow motor terminals to support weight of wire cables. Use cable supports and strain reliefs as required.

4.6 Use backup wrench when tightening lead connectors to motor terminal studs. Torque to 45 lb-ft max.

4.7 Do not exceed 100 ft. maximum power cable length between the VFD and motor terminals without consulting Carrier for special requirements.

Connect Power Wires to Oil Pump Starter — See Fig. 38. Connect power wires to oil pump starter mounted in machine power panel. Use separate fused disconnect or circuit breaker as shown on job wiring diagrams and Fig. 38. Check that power supply voltage agrees with oil pump voltage. Follow correct phasing for proper motor rotation.

⚠ CAUTION

Do not punch holes or drill into the top surface of either power panel. Knockouts are provided in the bottom of the power panels for wiring connections. Damage to machine could result.

Connect Power Wires to Oil Heater Contactor — Connect control power wiring between the oil heater contactor terminals and terminals LL1 and LL2 on the field wiring strip in the compressor motor starter. Refer to Fig. 39 and wiring label on the machine power panel for units without split ring diffuser. Refer to Fig. 40 for units with split ring diffuser.

⚠ WARNING

Voltage to terminals LL1 and LL2 (of each circuit) comes from a control transformer in a starter built to Carrier specifications. Do not connect an outside source of control power to the compressor motor starter (terminals LL1 and LL2 of each circuit). An outside power source will produce dangerous voltage at the line side of the starter, because supplying voltage at the transformer secondary terminals produces input level voltage at the transformer primary terminals. Severe injury could result.

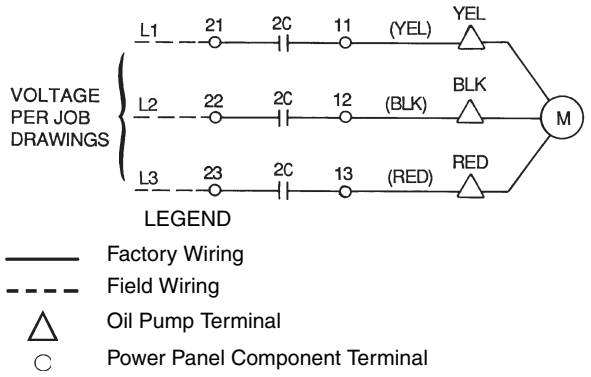

Fig. 38 — Oil Pump Wiring

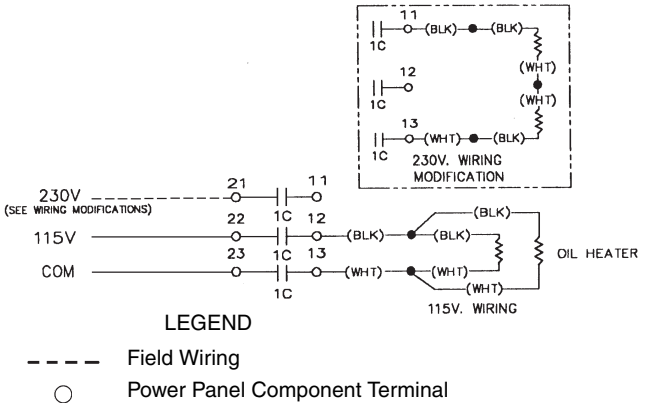

Fig. 39 — Oil Heater and Control Power Wiring (Units without Split Ring Diffuser)

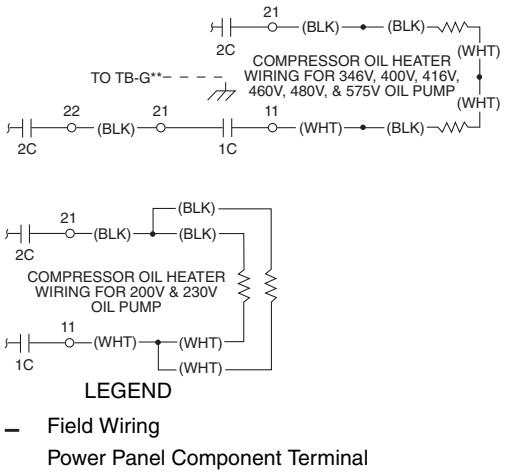

Fig. 40 — Oil Heater and Control Power Wiring (Units with Split Ring Diffuser)

Connect Wiring from Starter to Power Panel — Connect control wiring from main motor starter to the machine power panel. All control wiring must use shielded cable. Also, connect the communications cable. Refer to the job wiring diagrams for cable type and cable number. Make sure the control circuit is grounded in accordance with applicable electrical codes and instructions on machine control wiring label.

CARRIER COMFORT NETWORK INTERFACE — The Carrier Comfort Network® (CCN) communication bus wiring is supplied and installed by the electrical contractor. It consists of shielded, 3-conductor cable with drain wire.

The system elements are connected to the communication bus in a daisy chain arrangement. The positive pin of each system element communication connector must be wired to the positive pins of the system element on either side of it. The negative pins must be wired to the negative pins. The signal ground pins must be wired to the signal ground pins. See Fig. 28 for location of the CCN network connections on the terminal strip labelled CCN.

NOTE: Conductors and drain wire must be 20 AWG (American Wire Gage) minimum stranded, tinned copper. Individual conductors must be insulated with PVC, PVC/nylon, vinyl, Teflon*, or polyethylene. An aluminum/polyester 100% foil shield and an outer jacket of PVC, PVC/nylon, chrome vinyl, or Teflon with a minimum operating temperature range of –4 F to 140 F (–20 C to 60 C) is required. See table below for cables that meet the requirements.

MANUFACTURER	CABLE NO.
Alpha	2413 or 5463
American	A22503
Belden	8772
Columbia	02525

When connecting the CCN communication bus to a system element, a color code system for the entire network is recommended to simplify installation and checkout. The following color code is recommended:

SIGNAL TYPE	CCN BUS CONDUCTOR INSULATION COLOR	CCN NETWORK INTERFACE (Control Panel)
+	Red	+
Ground	White	G
–	Black	–

If a cable with a different color scheme is selected, a similar color code should be adopted for the entire network.

*Registered trademark of DuPont.

At each system element, the shields of its communication bus cables must be tied together. If the communication bus is entirely within one building, the resulting continuous shield must be connected to ground at only one single point. See Fig. 28. If the communication bus cable exits from one building and enters another, the shields must be connected to ground at the lightening suppressor in each building where the cable enters or exits the building (one point only).

To connect the 19XR chiller to the network, proceed as follows (see Fig. 28):

1. Route wire through knockout in back of control panel.
2. Strip back leads.
3. Crimp one no. 8 size spring spade terminal on each conductor.
4. Attach red to "+" terminal and white to "G" terminal and black to "–" terminal of CCN Network interface located in the control panel.

OPTIONAL UPC OPEN CONTROLLER WIRING — The optional UPC Open controller communicates using BACnet* on an MS/TP network segment communications at 9600 bps, 19.2 kbps, 38.4 kbps, or 76.8 kbps.

Wire the controllers on an MS/TP network segment in a daisy-chain configuration. Wire specifications for the cable are 22 AWG (American Wire Gage) or 24 AWG, low-capacitance, twisted, stranded, shielded copper wire. The maximum length is 2000 ft.

Install a BT485 terminator on the first and last controller on a network segment to add bias and prevent signal distortions due to echoing. See Fig. 41-43.

To wire the UPC Open controller to the BAS network:

1. Pull the screw terminal connector from the controller's BAS Port.
2. Check the communications wiring for shorts and grounds.
3. Connect the communications wiring to the BAS port's screw terminals labeled Net +, Net -, and Shield.

NOTE: Use the same polarity throughout the network segment.

4. Insert the power screw terminal connector into the UPC Open controller's power terminals if they are not currently connected.
5. Verify communication with the network by viewing a module status report. To perform a module status report using the BACview keypad/display unit, press and hold the "FN" key then press the "." Key.

To install a BT485 terminator, push the BT485, on to the BT485 connector located near the BACnet connector.

NOTE: The BT485 terminator has no associated polarity.

To order a BT485 terminator, consult Commercial Products i-Vu® Open Control System Master Prices.

MS/TP Wiring Recommendations — Recommendations are shown in Tables 12 and 13. The wire jacket and UL temperature rating specifications list two acceptable alternatives. The Halar specification has a higher temperature rating and a tougher outer jacket than the SmokeGard specification, and it is appropriate for use in applications where the user is concerned about abrasion. The Halar jacket is also less likely to crack in extremely low temperatures.

NOTE: Use the specified type of wire and cable for maximum signal integrity.

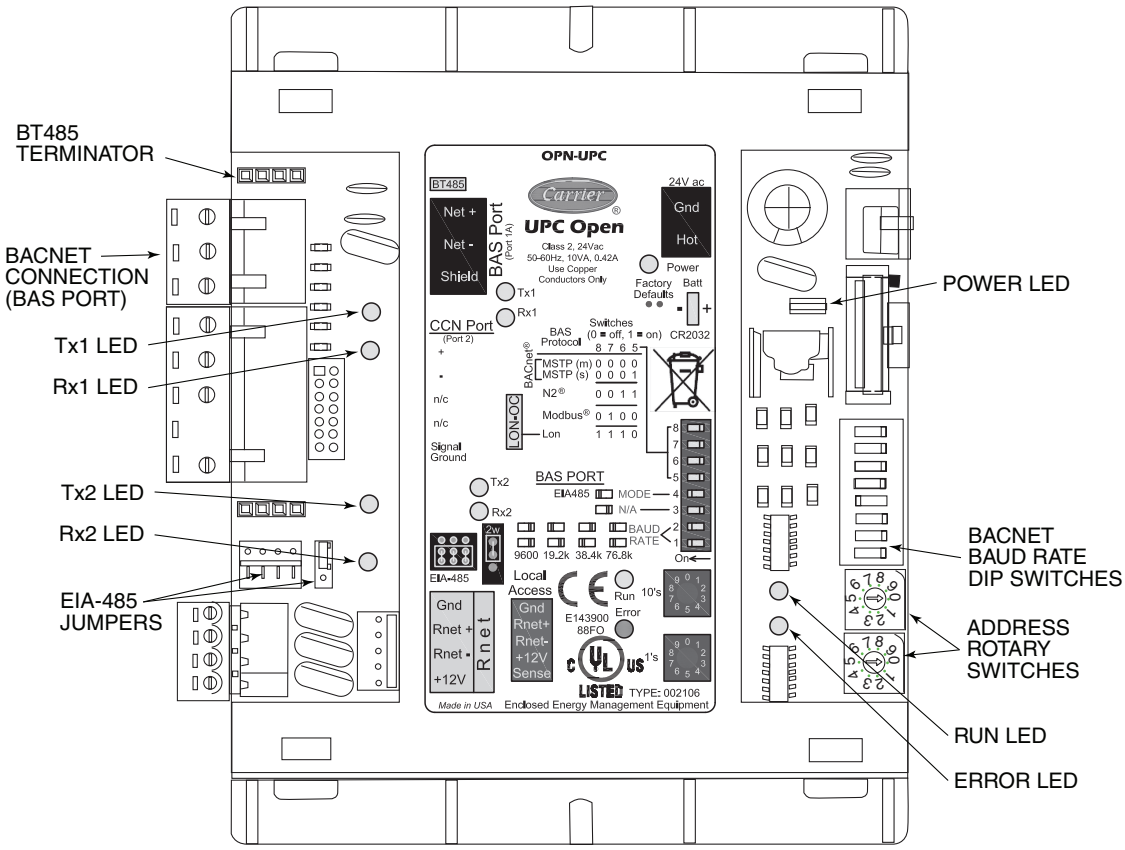

Fig. 41 — UPC Open Controller

* Sponsored by ASHRAE (American Society of Heating, Refrigerating and Air-Conditioning Engineers).

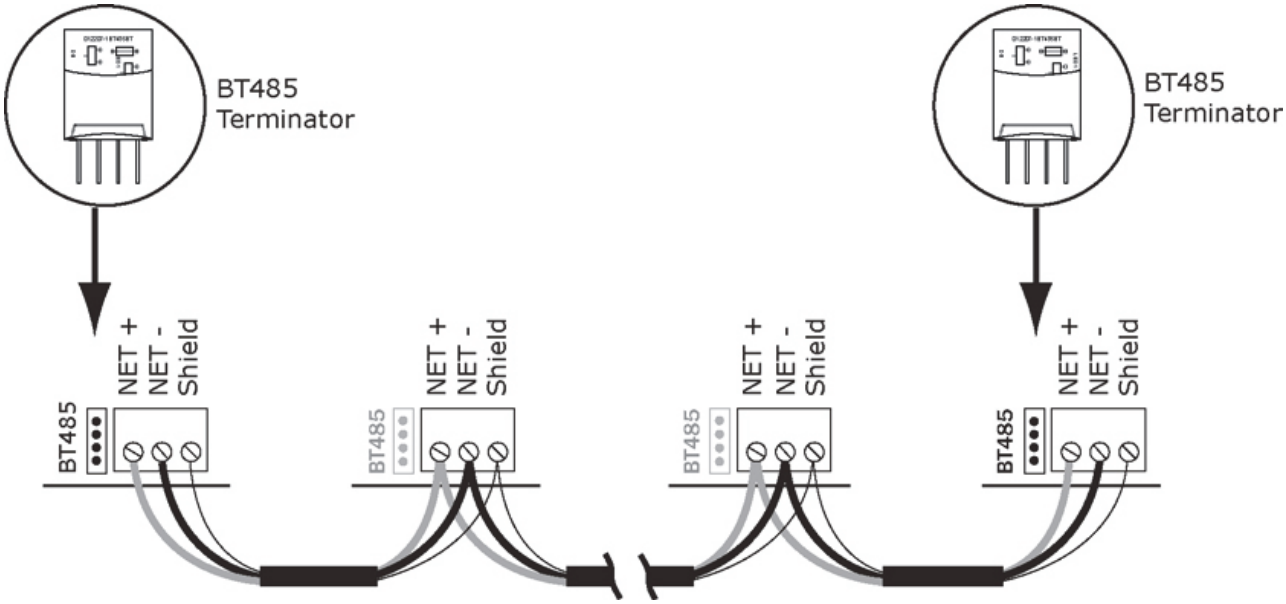

Fig. 42 — Network Wiring

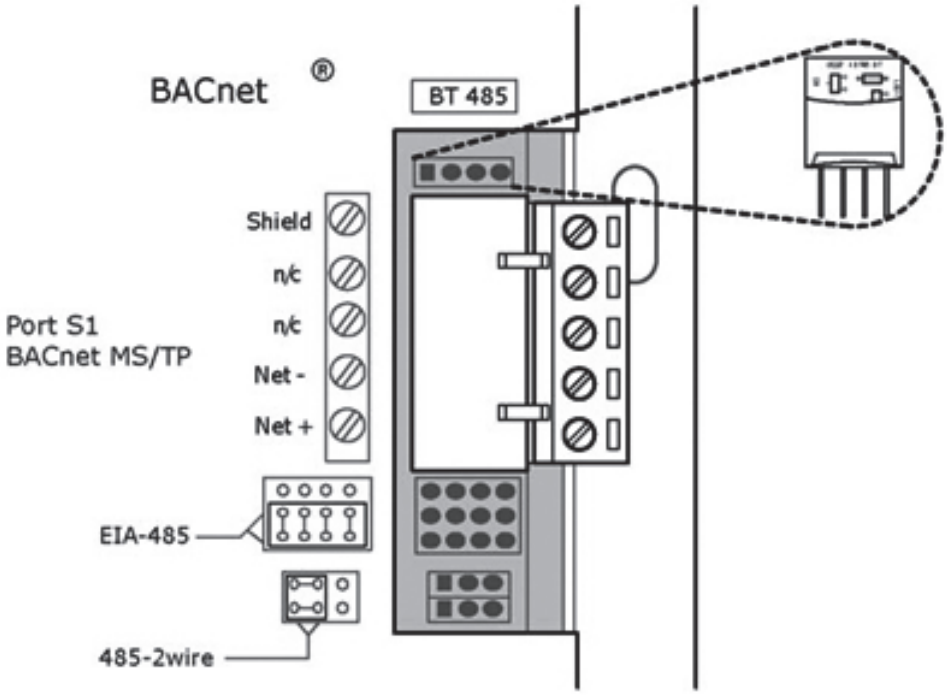

Fig. 43 — BT485 Terminator Installation

Table 12 — MS/TP Wiring Recommendations

SPECIFICATION	RECOMMENDATION
Cable	Single twisted pair, low capacitance, CL2P, 22 AWG (7x30), TC foam FEP, plenum rated cable
Conductor	22 or 24 AWG stranded copper (tin plated)
Insulation	Foamed FEP 0.015 in. (0.381 mm) wall 0.060 in. (1.524 mm) O.D.
Color Code	Black/White
Twist Lay	2 in. (50.8 mm) lay on pair 6 twists/foot (20 twists/meter) nominal
Shielding	Aluminum/Mylar shield with 24 AWG TC drain wire
Jacket	SmokeGard Jacket (SmokeGard PVC) 0.021 in. (0.5334 mm) wall 0.175 in. (4.445 mm) O.D. Halar Jacket (E-CTFE) 0.010 in. (0.254 mm) wall 0.144 in. (3.6576 mm) O.D.
DC Resistance	15.2 Ohms/1000 feet (50 Ohms/km) nominal
Capacitance	12.5 pF/ft (41 pF/meter) nominal conductor to conductor
Characteristic Impedance	100 Ohms nominal
Weight	12 lb/1000 feet (17.9 kg/km)
UL Temperature Rating	SmokeGard 167°F (75°C) Halar -40 to 302°F (-40 to 150°C)
Voltage	300 Vac, power limited
Listing	UL: NEC CL2P, or better

LEGEND

AWG — American Wire Gage
CL2P — Class 2 Plenum Cable
DC — Direct Current
FEP — Fluorinated Ethylene Polymer
NEC — National Electrical Code
O.D. — Outside Diameter
TC — Tinned Copper
UL — Underwriters Laboratories

Table 13 — Open System Wiring Specifications and Recommended Vendors

WIRING SPECIFICATIONS		RECOMMENDED VENDORS AND PART NUMBERS			
Wire Type	**Description**	**Connect Air International**	**Belden**	**RMCORP**	**Contractors Wire and Cable**
MS/TP Network (RS-485)	22 AWG, single twisted shielded pair, low capacitance, CL2P, TC foam FEP, plenum rated. See MS/TP Installation Guide for specifications.	W221P-22227	—	25160PV	CLP0520LC
	24 AWG, single twisted shielded pair, low capacitance, CL2P, TC foam FEP, plenum rated. See MS/TP Installation Guide for specifications.	W241P-2000F	82841	25120-OR	—
Rnet	4 conductor, unshielded, CMP, 18 AWG, plenum rated.	W184C-2099BLB	6302UE	21450	CLP0442

LEGEND

AWG — American Wire Gage
CL2P — Class 2 Plenum Cable
CMP — Communications Plenum Rated
FEP — Fluorinated Ethylene Polymer
TC — Tinned Copper

Step 6 — Install Field Insulation

⚠ CAUTION

Protect insulation from weld heat damage and weld splatter. Cover with wet canvas cover during water piping installation.

When installing insulation at the jobsite, insulate the following components:

- compressor motor
- cooler shell
- cooler tube sheets
- suction piping
- motor cooling drain
- oil reclaim piping
- oil cooler refrigerant side tubing
- refrigerant liquid line to cooler

NOTE: Insulation of the waterbox covers is applied only at the jobsite by the contractor. When insulating the covers, make sure there is access for removal of waterbox covers for servicing. See Fig. 44.

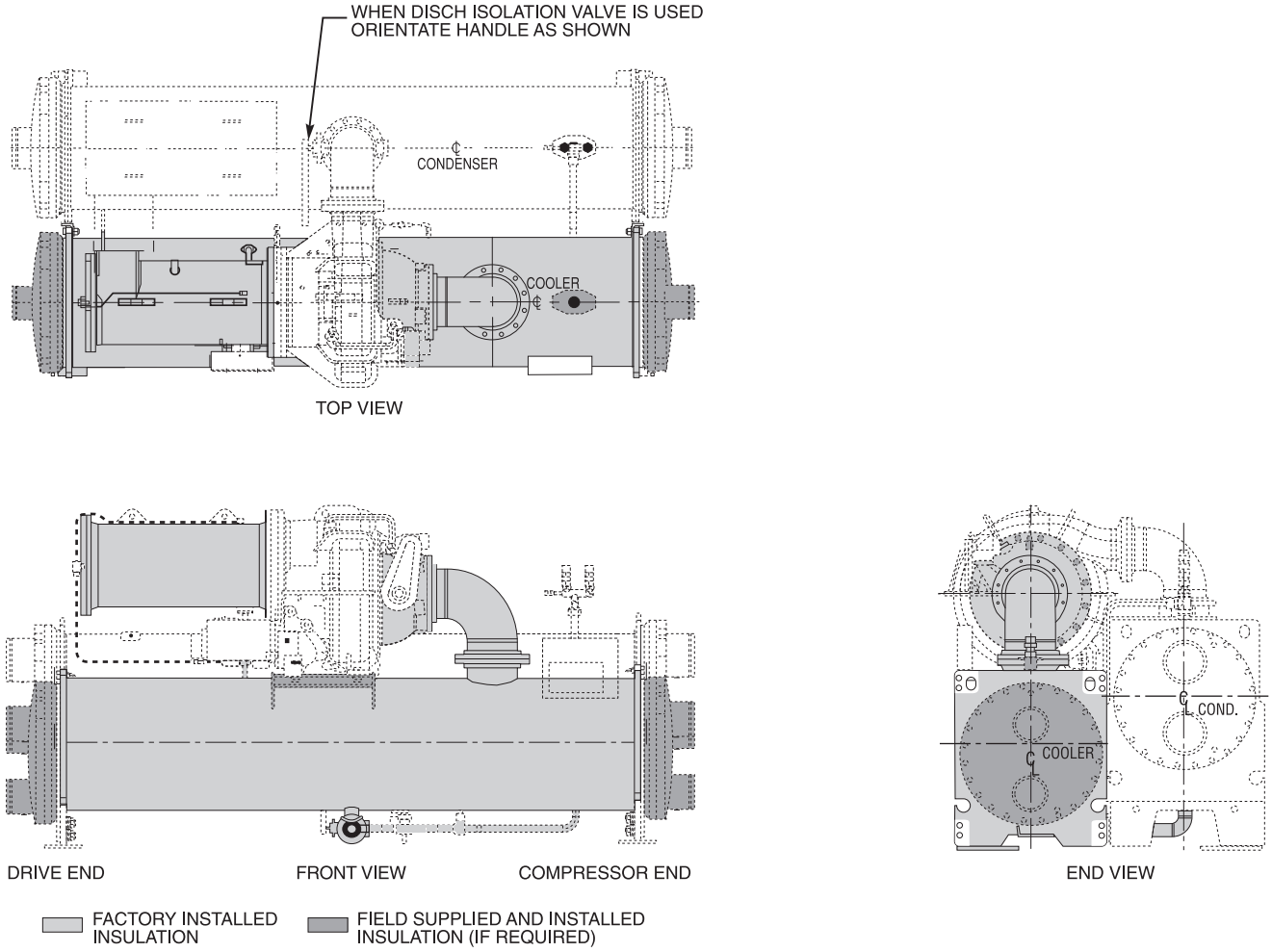

Fig. 44 — 19XR Insulation Area

© Carrier Corporation 2013

INSTALLATION START-UP REQUEST CHECKLIST

Machine Model Number: 19XR Serial Number: _____

To: _____

_____

_____

Attn: _____

Date _____

_____
Project Name

_____
Carrier Job Number

The following information provides the status of the chiller installation.

	YES/NO (N/A)	DATE TO BE COMPLETED
1. The machine is level.	_____	_____
2. The machine components are installed and connected in accordance with the installation instructions.	_____	_____
3. The isolation package and grouting (if necessary) are installed.	_____	_____
4. The relief valves are piped to the atmosphere.	_____	_____
5. All piping is installed and supported. Direction of flow is indicated in accordance with the installation instructions and job prints.		
a. Chilled water piping	_____	_____
b. Condenser water piping	_____	_____
c. Waterbox drain piping	_____	_____
d. Pumpout unit condenser piping (if installed)	_____	_____
e. Other _____	_____	_____
6. Gages are installed as called for on the job prints required to establish design flow for the cooler and condenser.		
a. Water pressure gages IN and OUT	_____	_____
b. Water temperature gages IN and OUT	_____	_____
7. The machine's starter wiring is complete. The wiring is installed per installation instructions and certified prints.		
a. Power wiring to compressor motor. (Motor leads will not be taped until the Carrier technician megger tests the motor.)	_____	_____
b. Oil pump wiring	_____	_____
c. Oil heater/control wiring	_____	_____
d. Carrier controls can independently energize water pumps and tower fan.	_____	_____
e. Line side voltage is within ±10% of chiller nameplate voltage.	_____	_____
f. Other _____	_____	_____
8. The motor starter has not been supplied by Carrier. It has been installed according to the manufacturer's instructions.	_____	_____
9. The motor starter has not been supplied by Carrier and it has been checked for proper operation.	_____	_____

Manufacturer reserves the right to discontinue, or change at any time, specifications or designs without notice and without incurring obligations.

COMMENTS:

_____

_____

_____

_____

TESTING	YES/NO	DATE TO BE COMPLETED
1. The cooling tower fan has been checked for blade pitch and proper operation.	_____	_____
2. The chilled water and condenser water lines have been:		
a. Filled	_____	_____
b. Tested	_____	_____
c. Flushed	_____	_____
d. Vented	_____	_____
e. Strainers cleaned	_____	_____
3. The chilled water and condenser water pumps have been checked for proper rotation and flow.	_____	_____
4. The following cooling load will be available for start-up:		
a. 25%	_____	_____
b. 50%	_____	_____
c. 75%	_____	_____
d. 100%	_____	_____
5. The refrigerant charge is at the machine.	_____	_____
6. Services such as electrical power and control air will be available at start-up.	_____	_____
7. The electrical and mechanical representatives will be available to assist in commissioning the machine.	_____	_____
8. The customer's operators will be available to receive instructions for proper operation of the chiller after start-up.	_____	_____

Concerns about the installation/request for additional assistance:

_____

_____

_____

_____

I am aware that the start-up time for a Carrier chiller can take between 2 and 6 days depending on the model of the machine and the options and accessories used with it.

Your contact at the jobsite will be _____

Phone number _____

Pager/cell number _____

Fax number _____

In accordance with our contract, we hereby request the services of your technician to render start-up services per contract terms for this job on _____ (Date). I understand that the technician's time will be charged as extra services due to correcting items in this checklist that are incomplete.

Signature of Purchaser _____

Signature of Jobsite Supervisor _____

CUT ALONG DOTTED LINE

CUT ALONG DOTTED LINE

© Carrier Corporation 2013