50JC04-06
Single Package Rooftop Electric Cooling Unit with Puron® (R-410A) Refrigerant 3 to 5 Nominal Tons

Service and Maintenance Instructions

CONTENTS

Page

SAFETY CONSIDERATIONS 2
UNIT ARRANGEMENT AND ACCESS 3
General 3
Routine Maintenance 3
Filters 3
SUPPLY FAN (BLOWER) SECTION 4
Supply Fan (Direct-Drive) 4
COOLING 8
Condenser Coil 8
Condenser Coil Maintenance and Cleaning Recommendation 8
Evaporator Coil 10
THERMOSTATIC EXPANSION VALVE (TXV) 10
TXV Operation 10
Replacing TXV 10
Refrigerant System Pressure Access Ports 11
PURON (R-410A) REFRIGERANT 12
Refrigerant Charge 12
COOLING CHARGING CHARTS 12
COMPRESSOR 14
Lubrication 14
Replacing Compressor 14
Compressor Rotation 14
Filter Drier 14
Condenser-Fan Adjustment 14
Troubleshooting Cooling System 15
CONVENIENCE OUTLETS 16
Convenience Outlets 16
Installing Weatherproof Cover 16
Non-Powered Type 17
Unit-Powered Type 17
Duty Cycle 17
Maintenance 17
Fuse on Powered Type 17
ELECTRIC HEATERS 17
Completing Heater Installation 18
SMOKE DETECTORS 19
System 19
Controller 19
Smoke Detector Sensor 19
Smoke Detector Locations 20
Completing Installation of Return Air Smoke Detector 20
FIOP Smoke Detector Wiring and Response 21
SENSOR AND CONTROLLER TESTS 22
Sensor Alarm Test 22
Controller Alarm Test 22
Dirty Controller Test 22
Dirty Sensor Test 22
Changing the Dirty Sensor Test 22
Remote Station Test 22
SD-TRK4 Remote Alarm Test Procedure 23
Remote Test/Reset Station Dirty Sensor Test 23
Dirty Sensor Test Using an SD-TRK4 23
Detector Cleaning 23
Indicators 23
Troubleshooting 24
PROTECTIVE DEVICES 25
Compressor Protection 25
Relief Device 25
Control Circuit, 24-V 25
SYSTEMVU CONTROL SYSTEM 25
SystemVu Interface 25
Air Temperature Sensors 25
Additional SystemVu Installation and Troubleshooting 25
COMPRESSOR VFD 28
Drive Board 28
Converter Board 29
Filter Board 33
Capacitor Board 34
ECONOMIZER SYSTEMS 35
EconoMi$er 2 35
PRE-START-UP/START-UP 36
START-UP, GENERAL 36
Unit Preparation 36
Additional Installation/Inspection 36
Return-Air Filters 36
Outdoor-Air Inlet Screens 36
Compressor Mounting 36
Internal Wiring 36
Refrigerant Service Ports 36
Compressor Rotation 37
Cooling 37
Heating 37
Ventilation (Continuous Fan) 37
FASTENER TORQUE VALUES 37
START-UP, SYSTEMVU CONTROLS 37
APPENDIX A — MODEL NUMBER NOMENCLATURE 38
APPENDIX B — PHYSICAL DATA 39
APPENDIX C — FAN PERFORMANCE 40
APPENDIX D — WIRING DIAGRAMS 53
START-UP CHECKLIST CL-1

Manufacturer reserves the right to discontinue, or change at any time, specifications or designs without notice and without incurring obligations.

SAFETY CONSIDERATIONS

Installation and servicing of air-conditioning equipment can be hazardous due to system pressure and electrical components. Only trained and qualified service personnel should install, repair, or service air-conditioning equipment. Untrained personnel can perform the basic maintenance functions of replacing filters. Trained service personnel should perform all other operations.

When working on air-conditioning equipment, observe precautions in the literature, tags and labels attached to the unit, and other safety precautions that may apply. Follow all safety codes. Wear safety glasses and work gloves. Use quenching cloth for unbrazing operations. Have fire extinguishers available for all brazing operations.

Follow all safety codes. Wear safety glasses and work gloves. Use quenching cloth for brazing operations. Have fire extinguisher available. Read these instructions thoroughly and follow all warnings or cautions attached to the unit. Consult local building codes and National Electrical Code (NEC) for special requirements.

Recognize safety information. This is the safety ALERT symbol ⚠. When you see this symbol on the unit and in instructions or manuals, be aware of the potential for physical injury hazards.

Understand the signal words **DANGER**, **WARNING**, and **CAUTION**. These words are used with the safety ALERT symbol. **DANGER** indicates a hazardous situation which, if not avoided, will result in death or severe personal injury. **WARNING** indicates a hazardous situation which, if not avoided, could result in death or personal injury. **CAUTION** indicates a hazardous situation which, if not avoided, could result in minor to moderate injury or product and property damage. **IMPORTANT** is used to address practices not related to physical injury. **NOTE** is used to highlight suggestions which will result in enhanced installation, reliability, or operation.

⚠ WARNING

ELECTRICAL OPERATION HAZARD

Failure to follow this warning could result in personal injury or death.

Before performing service or maintenance operations on unit, LOCKOUT/TAGOUT the main power switch to unit. Electrical shock and rotating equipment could cause severe injury.

⚠ WARNING

ELECTRICAL OPERATION HAZARD

Failure to follow this warning could result in personal injury or death.

Units with convenience outlet circuits may use multiple disconnects. Check convenience outlet for power status before opening unit for service. Locate its disconnect switch, if appropriate, and open it. Lock-out and tag-out this switch, if necessary.

⚠ WARNING

UNIT OPERATION AND SAFETY HAZARD

Failure to follow this warning could cause personal injury, death and/or equipment damage.

R-410A refrigerant systems operate at higher pressures than standard R-22 systems. Do not use R-22 service equipment or components on R-410A refrigerant equipment.

⚠ WARNING

FIRE, EXPLOSION HAZARD

Failure to follow this warning could result in death, serious personal injury and/or property damage.

Never use air or gases containing oxygen for leak testing or for operating refrigerant compressors. Pressurized mixtures of air or gases containing oxygen can lead to an explosion.

⚠ WARNING

FIRE, EXPLOSION HAZARD

Failure to follow this warning could result in death, serious personal injury and/or property damage.

Never use non-certified refrigerants in this product. Non-certified refrigerants could contain contaminates that could lead to unsafe operating conditions. Use ONLY refrigerants that conform to AHRI Standard 700.

⚠ CAUTION

UNIT DAMAGE HAZARD

Failure to follow this caution may result in reduced unit performance or unit shutdown.

High velocity water from a pressure washer, garden hose, or compressed air should never be used to clean a coil. The force of the water or air jet will bend the fin edges and increase airside pressure drop.

IMPORTANT: Lockout/Tag-out is a term used when electrical power switches are physically locked preventing power to the unit. A placard is placed on the power switch alerting service personnel that the power is disconnected.

UNIT ARRANGEMENT AND ACCESS

General

Figures 1 and 2 show general unit arrangement and access locations.

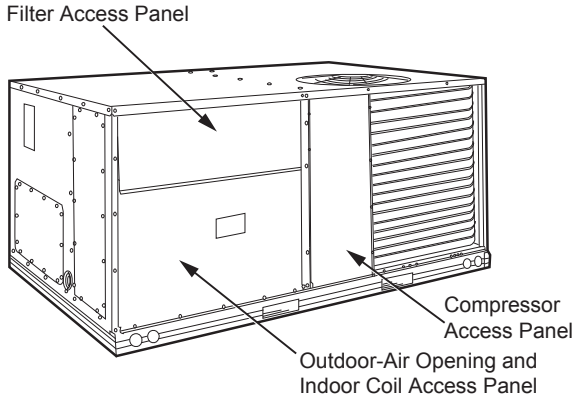

Fig. 1 — Typical Access Panel Locations

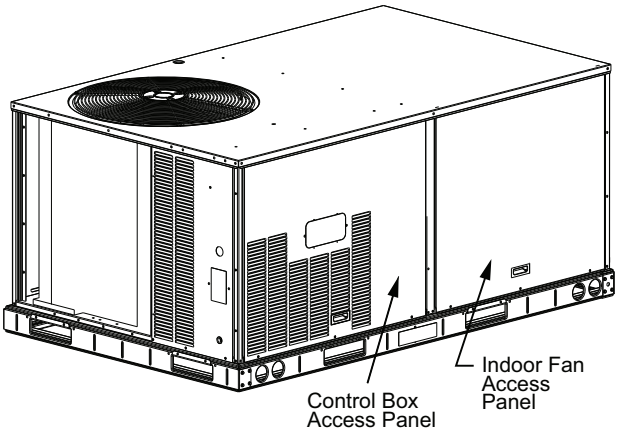

Fig. 2 — Blower Access Panel Location

Routine Maintenance

These items should be part of a routine maintenance program, to be checked every month or 2, until a specific schedule for each can be identified for this installation:

QUARTERLY INSPECTION (AND 30 DAYS AFTER INITIAL START)

- Return air filter replacement
- Outdoor hood inlet filters cleaned
- Condenser coil cleanliness checked
- Condensate drain checked

SEASONAL MAINTENANCE

These items should be checked at the beginning of each season (or more often if local conditions and usage patterns dictate):

Air Conditioning

- Ensure outdoor fan motor mounting bolts are tight
- Ensure compressor mounting bolts are tight
- Inspect outdoor fan blade positioning
- Ensure control box is clean
- Check control box wiring condition
- Ensure wire terminals are tight
- Check refrigerant charge level
- Ensure indoor coils are clean
- Check supply blower motor amperage

Electric Heating

- Inspect power wire connections
- Ensure fuses are operational
- Ensure manual reset limit switch is closed

Economizer or Outside Air Damper

- Check inlet filters condition
- Check damper travel (economizer)
- Check gear and dampers for debris and dirt

Air Filters and Screens

Each unit is equipped with return air filters. If the unit has an economizer, it will also have an outside air screen. If a manual outside air damper is added, an inlet air screen will also be present.

Each of these filters and screens will need to be periodically replaced or cleaned.

Filters

RETURN AIR FILTERS

⚠ CAUTION

EQUIPMENT DAMAGE HAZARD

Failure to follow this CAUTION can result in premature wear and damage to equipment.

DO NOT OPERATE THE UNIT WITHOUT THE RETURN AIR FILTERS IN PLACE.

Dirt and debris can collect on heat exchangers and coils possibly resulting in a small fire. Dirt buildup on components can cause excessive current used resulting in motor failure.

Return air filters are disposable fiberglass media type. Access to the filters is through the small lift-out panel located on the rear side of the unit, above the evaporator/return air access panel. (See Fig. 3.)

To remove the filters:

1. Grasp the bottom flange of the upper panel.
2. Lift up and swing the bottom out until the panel disengages and pulls out.
3. Reach inside and extract the filters from the filter rack.
4. Replace these filters as required with similar replacement filters of the same size.

To re-install the access panel:

1. Slide the top of the panel up under the unit top panel.
2. Slide the bottom into the side channels.
3. Push the bottom flange down until it contacts the top of the lower panel (or economizer top).

OUTSIDE AIR HOOD

Outside air hood inlet screens are permanent aluminum-mesh type filters. Check these for cleanliness. Remove the screens when cleaning is required. Clean by washing with hot low-pressure water and soft detergent and replace all screens before restarting the unit. Observe the flow direction arrows on the side of each filter frame.

ECONOMIZER INLET AIR SCREEN

This air screen is retained by filter clips under the top edge of the hood. (See Fig. 3.)

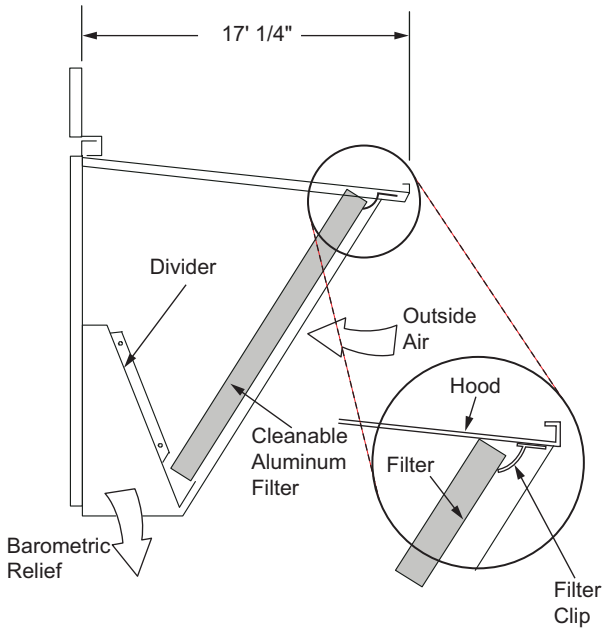

Fig. 3 — Filter Installation

To remove the filter, open the filter clips. Re-install the filter by placing the frame in its track, then closing the filter clips.

MANUAL OUTSIDE AIR HOOD SCREEN

This inlet screen is secured by a retainer angle across the top edge of the hood. (See Fig. 4.)

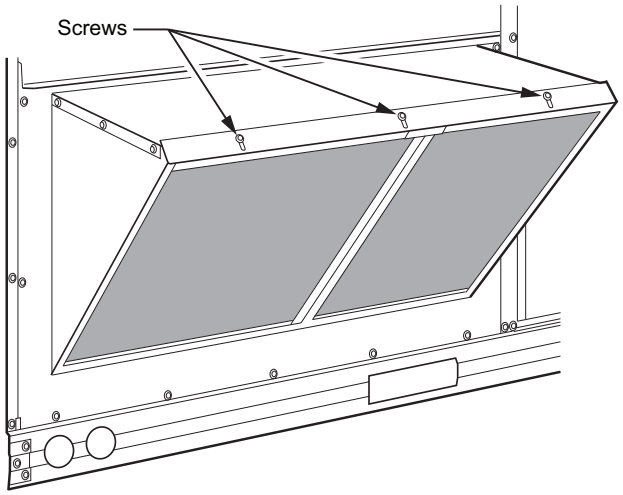

Fig. 4 — Screens Installed on Outdoor-Air Hood

To remove the screen, loosen the screws in the top retainer and slip the retainer up until the filter can be removed. Re-install by placing the frame in its track, rotating the retainer back down, and tightening all screws.

SUPPLY FAN (BLOWER) SECTION

⚠ WARNING

ELECTRICAL OPERATION HAZARD

Failure to follow this warning could result in personal injury or death.

Before performing service or maintenance operations on unit, LOCKOUT/TAGOUT the main power switch to unit. Electrical shock and rotating equipment could cause severe injury.

All low-voltage wiring should be routed through the provided raceway built into the corner post of the unit or secured to the unit control box with the electrical conduit in order to provide UL-required clearance between high and low-voltage wiring.

Supply Fan (Direct-Drive)

All JC units have the EcoBlue™ direct drive vane axial fan system. The fan is driven by an ECM motor with speed that is user set through the SystemVu™ controller. Speeds are fully configurable from 40% to 100% of motor's maximum speed. See Fig. 5 and 6.

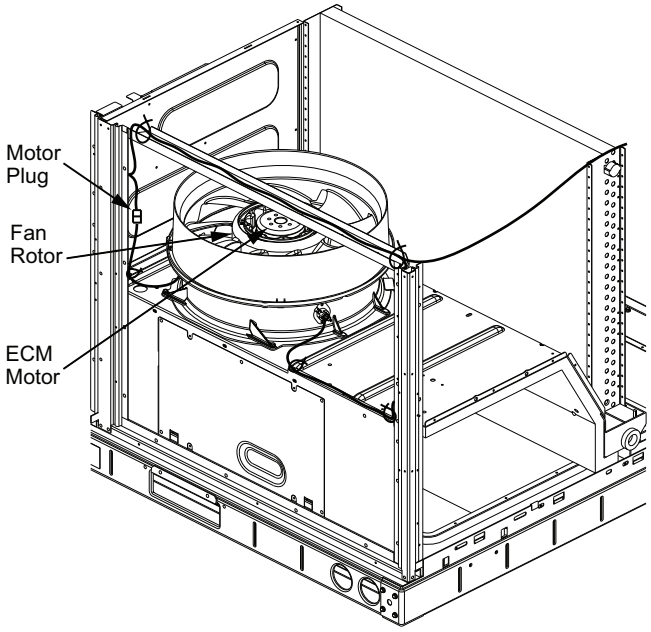

Fig. 5 — Direct-Drive Supply Fan Assembly

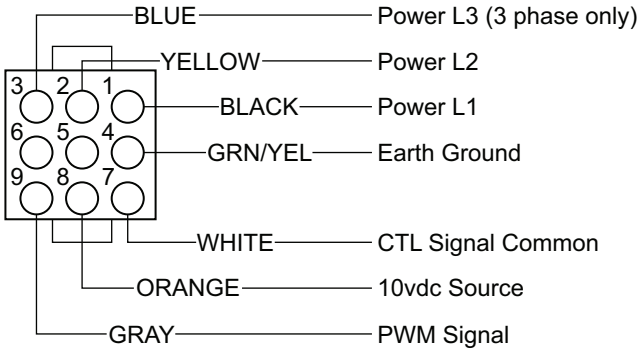

Fig. 6 — ECM Motor Plug Connectors

EVALUATING MOTOR SPEED

The direct drive ECM blower motor uses a constant speed design. Motor speed is controlled by a PWM signal sent from SystemVu to directly control rpm.

Setting the Fan Speed with SystemVu™ controls

The Fan Speed settings are accessed through the SystemVu interface.

1. Check the job specifications for the cfm (cubic feet per minute) and ESP (external static pressure) required.
2. Using the chart on the Fan Speed Set Up labels (see Fig. 7), calculate the rpm from the cfm and ESP for the base unit.
3. If installing any accessories listed at the bottom of the Set Up Label, add accessory rpm to base unit rpm in upper portion of label. For electric heaters use only one adder (e.g., 2 stage heater uses only 2 stage adder, not 1 stage plus 2 stage).

NOTE: The Fan Speed Set Up labels are located on the High Voltage cover in the Control Box.

4. Press any key on the SystemVu interface to activate the display backlight and then press the MENU key.
5. Using the UP and DOWN arrow keys highlight SETTINGS and then press ENTER.
6. Use the DOWN arrow key highlight the UNIT CONFIGURATIONS menu then press ENTER.
7. Highlight UNIT CONFIGURATIONS then press ENTER.
8. Highlight INDOOR FAN and then press ENTER.
9. Refer to the job specifications to set the following, determining the values per the rpm Calculator label (see Fig. 7). Use the UP and DOWN arrow keys and the BACK key to set the values. Press ENTER after setting each value to continue to the next selection.

- IDF VENT SPD
- IDF HEAT SPD
- IDF LOW COOL SPD
- IDF HIGH SPD
- IDF FREE COOL SPD

For further details see the following manual: 48/50JC 04-06 Ultra High Efficiency Single Package Rooftop Units with SystemVu™ Controls Version X.X Controls, Start-up, Operation and Troubleshooting Instructions.

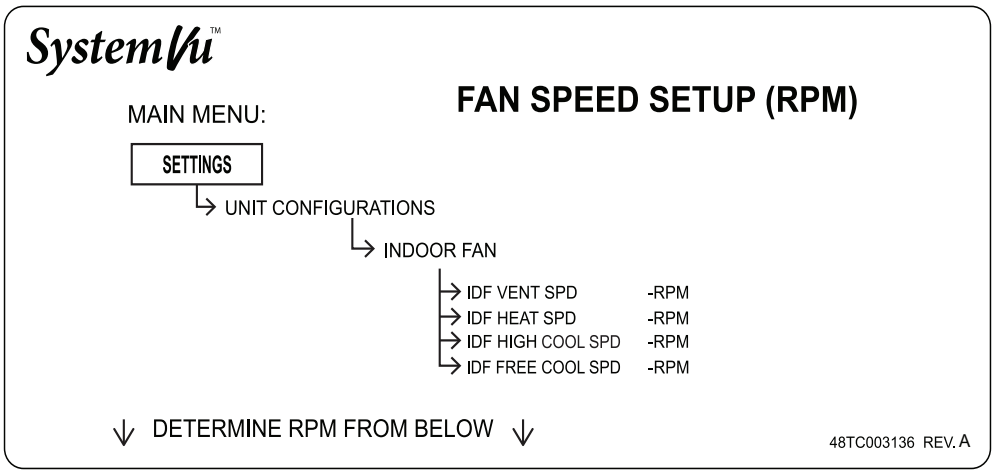

RPM Calculator

UNIT MODEL NUMBER / CFM	ESP in. wg 0.2	0.4	0.6	0.8	1.0	1.2	1.4	1.6	1.8	2.0
1500	1301	1477	1639	1788	1925	2054	2174	2289		
1625	1381	1544	1699	1843	1976	2101	2220	2332		
1750	1463	1615	1763	1902	2031	2152	2268	2378		
1875	1548	1688	1828	1962	2087	2206	2318			
2000	1633	1764	1897	2025	2146	2262	2372			
2125	1720	1842	1967	2090	2208	2320				
2250	1808	1921	2040	2157	2271	2380				
2375	1897	2003	2115	2227	2336					
2500	1987	2068	2191	2298						
Field Accessories:										
Economizer	66	66	66	66	66	66	66	66		
1 Stage E Heat	80	80	80	80	80	80	80	80		
2 Stage E Heat	107	107	107	107	107	107	107	107		

NOTE: Values in the Field Accessories section are vdc adders.

Fig. 7 — Example of Fan Speed Set Up Labels for SystemVu™ Controls

TROUBLESHOOTING THE ECM MOTOR

EcoBlue™ motors are designed with several built-in protections included in the motor software. If the motor detects a fault it will safely shut down. For temperature related faults the motor requires a line voltage reset to continue operation. For all others, the motor will resume operation automatically as soon as the fault condition is cleared. See Table 1 for a complete list.

Table 1 — Fault Condition/Reset Trigger

FAULT CONDITION	RESET TRIGGER	DESCRIPTION
Phase Failure	Automatic	One phase is missing or imbalanced. In this case the motor will come to a stop and then automatically restart when all phases are present.
Locked/ Blocked Rotor	Automatic	The rotor is blocked. Once the locking mechanism has been removed, the motor will automatically restart.
Motor Overheated	Manual	The motor will stop in the event the motor overheats. In this case there has to be a manual restart.
Power Module Overheated	Manual	The motor will stop in the event the electronics overheat. In this case there has to be a manual restart.
Line under-voltage	Automatic	Once the line voltage returns within permitted operating range, the fan will automatically restart.
Communication Error	Automatic	Internal communication error of the fan's electronics. The fan will restart automatically, if error is cleared.

Troubleshooting the motor requires a voltmeter.

1. Disconnect main power to the unit.
2. Disconnect motor plug in supply section of the unit.
3. Restore main unit power.
4. Check for proper line voltage at motor power leads Black (PL1-1), Yellow (PL1-2), and Blue (PL1-3). See the following table.

48JC UNIT VOLTAGE	MOTOR VOLTAGE	MIXIMUM-MAXIMUM VOLTS
208/230	230	187-253
460	460	414-506
575	575	518-633

5. Check for Control voltage. YEL (PL1-9) to BRN (PL1-7) should be 10-20 vdc with no commanded speed.
6. Verify the J10 plug at the SystemVu board is wired per Fig. 8, connected tight, and wires are secured in the plug
7. Disconnect main power.
8. Reconnect motor plug in supply section of unit.
9. Restore main power.
10. Use SystemVu test mode to control the motor. Press the TEST button. Turn the TEST MODE to on, enter the SERVICE TEST menu, and then enter the FAN TEST menu.
11. Verify with IDF SPEED TEST set to 0% the LED6 on the board (to the left of the J10 plug) is off. Verify when the IDF SPEED TEST is set to 10% or higher the LED6 turns on green.
12. Verify there are no alarms active on SystemVu controller.
13. If all above is verified and the motor does not start and run, remove the fan assembly and replace the motor with one having the same part number. Do not substitute with an alternate design motor as the voltage/speed programming will not be the same as that on an original factory motor.

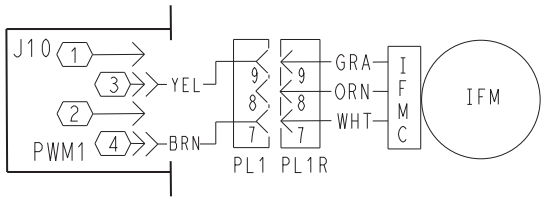

Fig. 8 — Supply Fan Control Wiring Diagram

Removing the Motor and Fan Assembly

NOTE: Due to press fit design of composite Rotor on Motor, it is highly recommended that any time a motor is replaced the fan rotor is replaced as well. The rest of the assembly may be reused.

See Fig. 9.

1. Unplug motor harness from control box harness and cut wire tie at the fan deck.
2. Unplug connectors from stator temperature limit switch.
3. Remove 2 screws at front of stator on fan deck.
4. Slide fan assembly forward a couple of inches to clear rear brackets and lift assembly out.

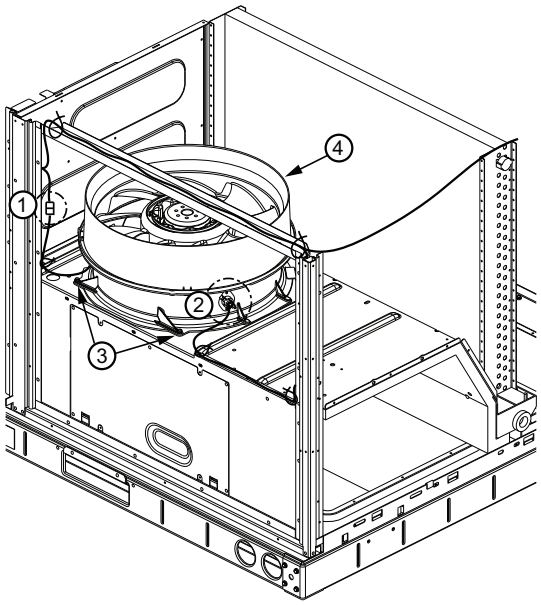

Fig. 9 — Fan Assembly Removal

Disassembling Motor and Fan Assembly

See Fig. 10.

1. Remove 6 screws from retaining rings in the top of the fan rotor.
2. Remove rotor from motor.
3. Remove 4 screws connecting motor to stator flange.
4. Remove stator from motor.
5. If required, remove stator limit switch on stator.
6. Remove 3 screws from the heat shield. Retain the heat shield if a new heat shield has not been ordered.

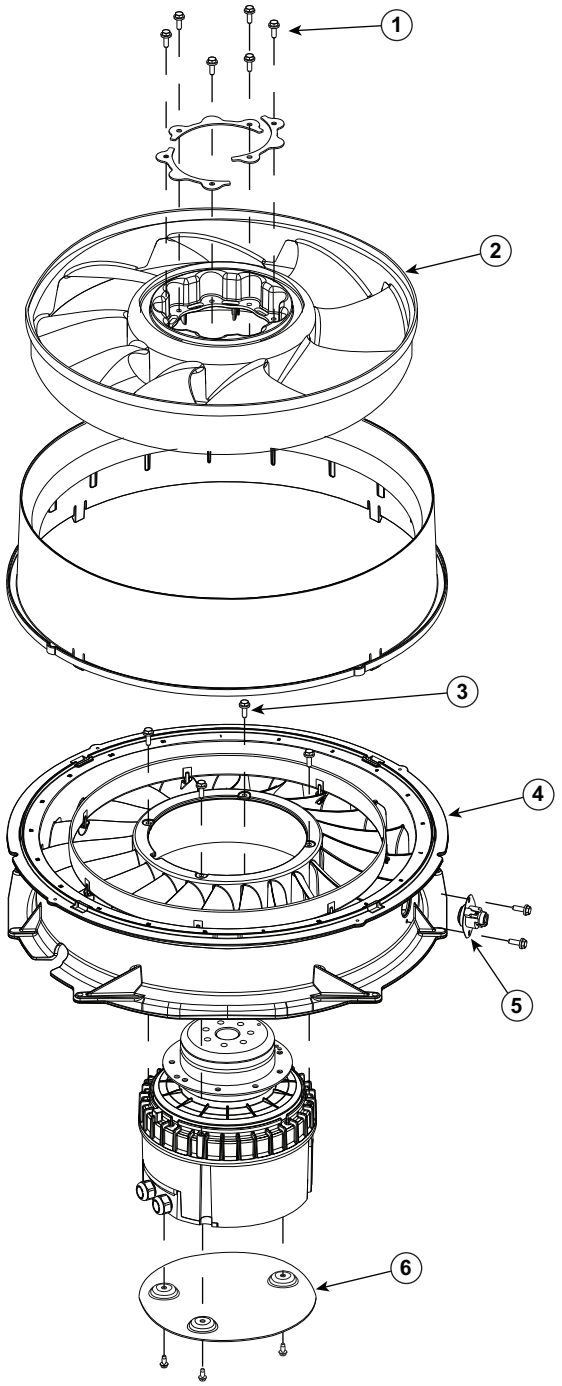

Fig. 10 — Disassembling Motor and Fan Assembly

Reassembly of Motor and Fan Assembly

See Fig. 11.

1. Install heat shield on motor with 3 no. 8-32 x 3/8 in. thread cutting screws (P/N: AK92AB100). Tighten to 30 in.-lb (3.39 Nm).
2. Place motor on flat surface.
3. If required, install stator limit switch on stator with 2 no. 10 x 5/8 in. hex head screws (P/N: AL48AM217). Tighten to 50 in.-lb (5.65 Nm).
4. If required, insert composite ring into stator where pegs match up with holes.
5. Line up rectangle key way in the center of stator with rectangle feature on motor and set stator onto motor.

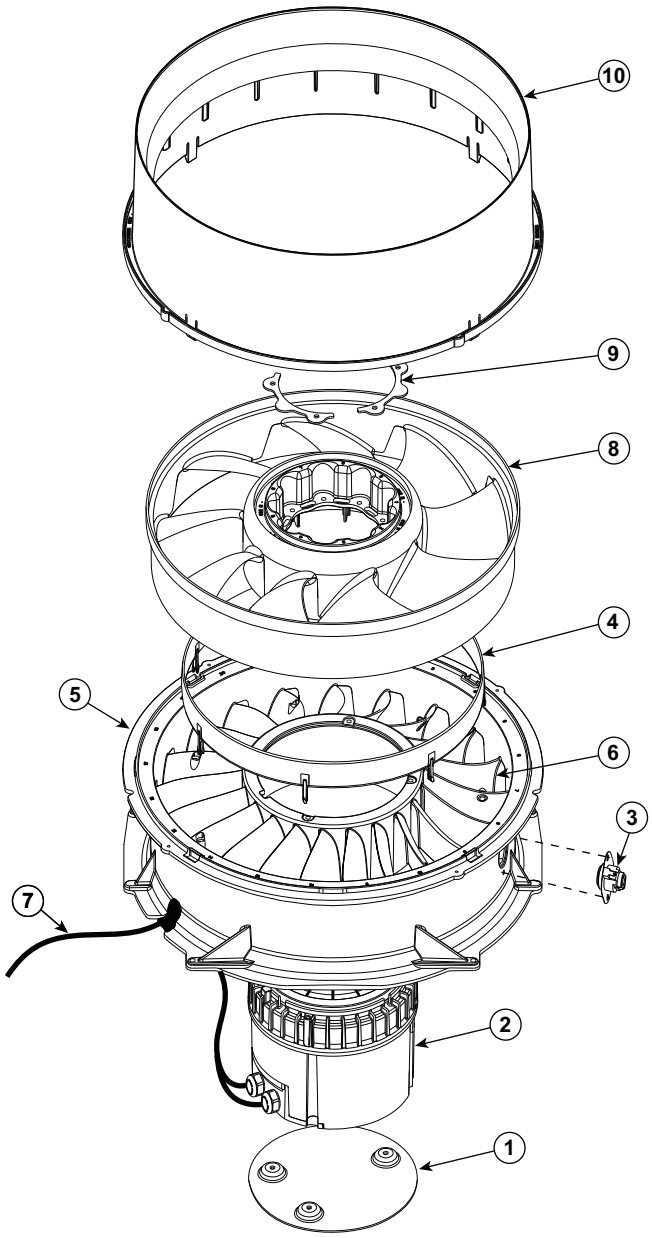

Fig. 11 — Fan System Re-Assembly

6. Install 4 no. 10-32 x 1/2 in. hex head machine screws (P/N: AD07AB126) to connect stator to motor. Tighten to 23 in.-lb (2.6 Nm).
7. Fit grommet on motor wire harness into keyhole feature on the side of the stator and pull wire harness out through grommet.
8. Install rotor on motor by lining up one of 9 holes on composite rotor with one of 9 holes on motor flange. This can be done by adjusting motor and the top of the motor hub and aligning using a 3/16 in. Allen key or similar pin. Press fan rotor down until it is flush with the motor flange.
9. Set retaining rings (x3) into composite rotor and install 6 no. 10-32 x 1/2 in. hex head machine screws (P/N: AD07AB126) through the holes in retaining rings. Tighten to 23 in.-lb (2.6 Nm). It is recommended this screw installation be done in a star pattern.
10. Align tabs of composite casing with rectangular cutouts on top of stator and snap into place.
11. Final assembly should have a small clearance between top of plastic rotor and underside of casing lip. Spin rotor by hand to ensure no contact or rubbing between these 2 parts.

Reinstalling Motor and Fan Assembly

See Fig. 12.

1. Align motor harness/grommet at ~7 o'clock (facing installer) and align the bottom flats on right and left sides of fan stator with fan deck ribs. Drop fan assembly down into fan deck opening and slide back until stator is under the rear fan deck brackets.
2. Align (if necessary) 2 front holes and fasten stator to fan deck with 2 no. 10 x 5/8 in. hex head screws (P/N: AL48AM217). Tighten to 50 in.-lb (5.65 Nm).
3. Reconnect wires for stator temperature limit switch.
4. Pull motor harness tight through grommet and plug it in to the control box harness and secure in the corner with snap-in wire tie.

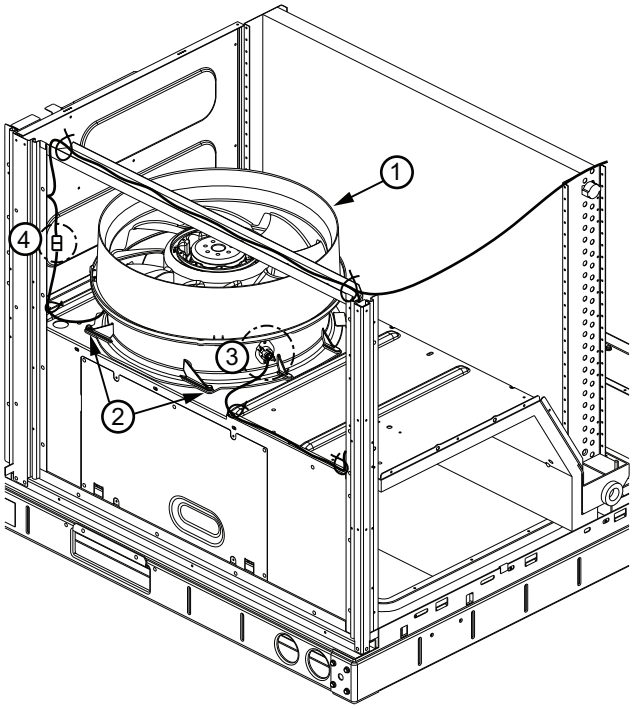

Fig. 12 — Fan Assembly Install

COOLING

⚠ WARNING

UNIT OPERATION AND SAFETY HAZARD

Failure to follow this warning could cause personal injury, death and/or equipment damage.

This system uses R-410A refrigerant, which has higher pressures than R-22 and other refrigerants. No other refrigerant may be used in this system. Gauge set, hoses, and recovery system must be designed to handle R-410A refrigerant. If unsure about equipment, consult the equipment manufacturer.

Condenser Coil

The condenser coil is fabricated with round tube copper hairpins and plate fins of various materials and/or coatings (see Appendix A — Model Number Nomenclature on page 38 to identify the materials provided in this unit). The coil is a composite-type 2-row coil. Composite 2-row coils are 2 single-row coils fabricated with a single return bend end tubesheet.

Condenser Coil Maintenance and Cleaning Recommendation

Routine cleaning of coil surfaces is essential to maintain proper operation of the unit. Elimination of contamination and removal of harmful residues will greatly increase the life of the coil and extend the life of the unit. The following maintenance and cleaning procedures are recommended as part of the routine maintenance activities to extend the life of the coil.

REMOVE SURFACE LOADED FIBERS

Surface loaded fibers or dirt should be removed with a vacuum cleaner. If a vacuum cleaner is not available, a soft non-metallic bristle brush may be used. In either case, the tool should be applied in the direction of the fins. Coil surfaces can be easily damaged (fin edges can be easily bent over and damage to the coating of a protected coil) if the tool is applied across the fins.

NOTE: Use of a water stream, such as a garden hose, against a surface loaded coil will drive the fibers and dirt into the coil. This will make cleaning efforts more difficult. Surface loaded fibers must be completely removed prior to using low velocity clean water rinse.

PERIODIC CLEAN WATER RINSE

A periodic clean water rinse is very beneficial for coils that are applied in coastal or industrial environments. However, it is very important that the water rinse is made with a very low velocity water stream to avoid damaging the fin edges. Monthly cleaning as described below is recommended. Rinsing coils in the opposite direction of airflow is recommended.

ROUTINE CLEANING OF COIL SURFACES

Periodic cleaning with Totaline® environmentally balanced coil cleaner is essential to extend the life of coils. This cleaner is available from Replacement Components Division as part number P902-0301 for a one gallon container, and part number P902-0305 for a 5 gallon container. It is recommended that all coils, including standard aluminum, pre-coated, copper/copper or e-coated coils be cleaned with the Totaline environmentally balanced coil cleaner as described below. Coil cleaning should be part of the unit's regularly scheduled maintenance procedures to ensure long life of the coil. Failure to clean the coils may result in reduced durability in the environment.

Avoid use of:

- coil brighteners
- acid cleaning prior to painting
- high pressure washers
- poor quality water for cleaning

Totaline environmentally balanced coil cleaner is nonflammable, hypo-allergenic, non-bacterial, and a USDA accepted biodegradable agent that will not harm the coil or surrounding components such as electrical wiring, painted metal surfaces, or insulation. Use of non-recommended coil cleaners is strongly discouraged since coil and unit durability could be affected.

Two-Row Condenser Coils

Clean coil as follows:

1. Turn off unit power, tag disconnect.
2. Remove all screws from the top panel except the screws securing the condenser fan to the top panel. See Fig. 13.

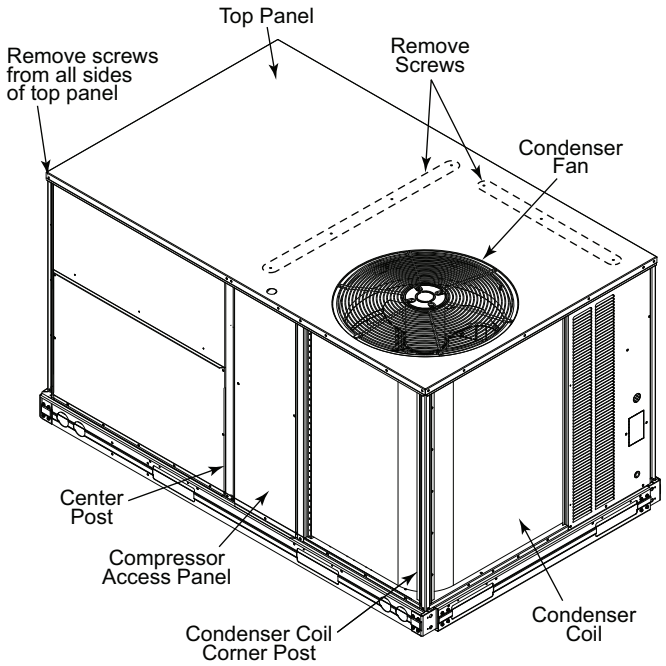

Fig. 13 — Location of Screws and Coil Corner Post

3. Lift and rotate the top panel at the condenser fan end and rotate the panel 90 degrees. Support the top panel so it remains level while resting on the condenser fan as shown in Fig. 14.
4. Remove the compressor access panel to access the lower coil clip. The condenser coil corner post may also be remove.
5. Remove the screws from both sides of the upper and lower coil retaining clips on the hairpin end of the coil tube sheets. See Fig. 15.
6. Remove the upper and lower retaining clips.
7. Draw the inner coil inward to separate the coils for cleaning.
8. Insert a spacer (field-supplied) between the tube sheets to hold the coils apart. See Fig. 16.
9. Clean the outer coil surface to remove surface loaded fibers or dirt. See "Remove Surface Loaded Fibers" on page 8 for details.
10. Use a water hose or other suitable equipment to flush down between the 2 coil sections to remove dirt and debris. If a coil cleaner is used be sure to rinse the coils completely before reassembly.
11. Move the inner coil back into position. Reinstall the lower and upper coil clips. Reinstall the top panel and replace all screws.

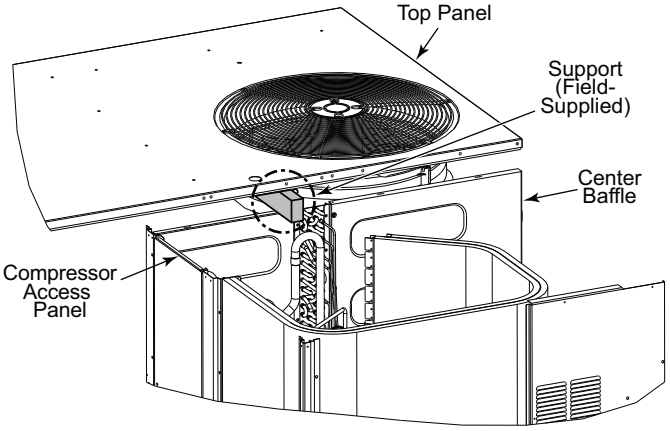

Fig. 14 — Top Panel Position

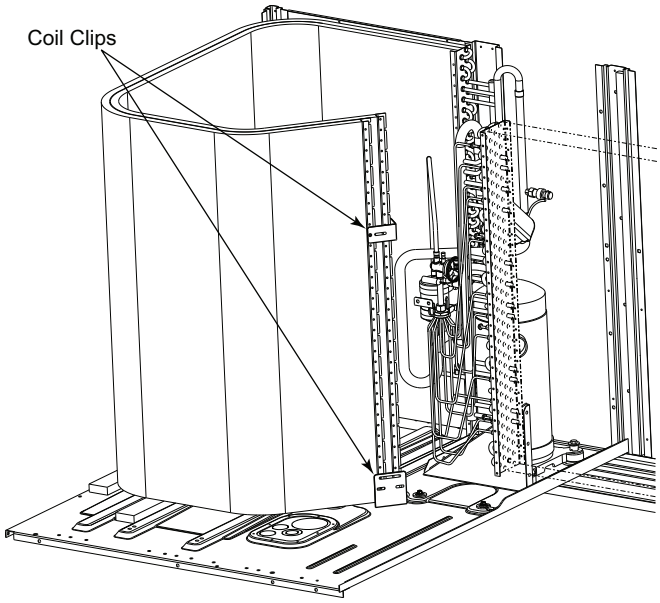

Fig. 15 — Condenser Coil Clips

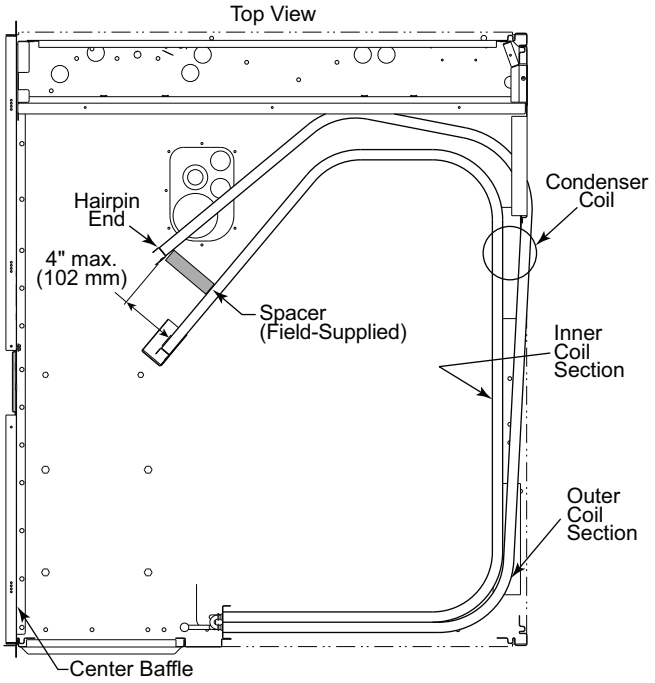

Fig. 16 — Separating Coil Sections

⚠ CAUTION

UNIT DAMAGE HAZARD

Failure to follow this caution may result in reduced unit performance or unit shutdown.

High velocity water from a pressure washer, garden hose, or compressed air should never be used to clean a coil. The force of the water or air jet will bend the fin edges and increase airside pressure drop.

⚠ CAUTION

UNIT DAMAGE HAZARD

Failure to follow this caution may result in accelerated corrosion of unit parts.

Harsh chemicals, household bleach or acid or basic cleaners should not be used to clean outdoor or indoor coils of any kind. These cleaners can be very difficult to rinse out of the coil and can accelerate corrosion at the fin/tube interface where dissimilar materials are in contact. If there is dirt below the surface of the coil, use the environmentally balanced coil cleaner.

Totaline Environmentally Balanced Coil Cleaner Application Equipment

- 2-1/2 gallon garden sprayer
- Water rinse with low velocity spray nozzle

Totaline Environmentally Balanced Coil Cleaner Application Instructions

1. Proper eye protection such as safety glasses is recommended during mixing and application.
2. Remove all surface loaded fibers and dirt with a vacuum cleaner as described above.
3. Thoroughly wet finned surfaces with clean water and a low velocity garden hose, being careful not to bend fins.
4. Mix Totaline environmentally balanced coil cleaner in a 2-1/2 gallon garden sprayer according to the instructions included with the cleaner. The optimum solution temperature is 100°F.

NOTE: Do NOT USE water in excess of 130°F, as the enzymatic activity will be destroyed.

5. Thoroughly apply Totaline environmentally balanced coil cleaner solution to all coil surfaces including finned area, tube sheets and coil headers.
6. Hold garden sprayer nozzle close to finned areas and apply cleaner with a vertical, up-and-down motion. Avoid spraying in horizontal pattern to minimize potential for fin damage.
7. Ensure cleaner thoroughly penetrates deep into finned areas. Interior and exterior finned areas must be thoroughly cleaned. Finned surfaces should remain wet with cleaning solution for 10 minutes. Ensure surfaces are not allowed to dry before rinsing. Reapply cleaner as needed to ensure 10-minute saturation is achieved.
8. Thoroughly rinse all surfaces with low velocity clean water using downward rinsing motion of water spray nozzle. Protect fins from damage from the spray nozzle.

Evaporator Coil

CLEANING THE EVAPORATOR COIL

1. Turn unit power off. Install lockout tag. Remove evaporator coil access panel.
2. If economizer or two-position damper is installed, remove economizer by disconnecting Molex®[1] plug and removing mounting screws.
3. Slide filters out of unit.
4. Clean coil using a commercial coil cleaner or dishwasher detergent in a pressurized spray canister. Wash both sides of coil and flush with clean water. For best results, backflush toward return-air section to remove foreign material. Flush condensate pan after completion.
5. Reinstall economizer and filters.
6. Reconnect wiring.
7. Replace access panels.

THERMOSTATIC EXPANSION VALVE (TXV)

All 50JC units have a factory-installed nonadjustable thermostatic expansion valve (TXV). The TXV is a bi-flow, bleed port expansion valve with an external equalizer. The TXVs are specifically designed to operate with Puron® refrigerant. Use only factory-authorized TXVs.

TXV Operation

The TXV is a metering device that is used in air conditioning and heat pump systems to adjust to the changing load conditions by maintaining a preset superheat temperature at the outlet of the evaporator coil.

The volume of refrigerant metered through the valve seat is dependent upon the following:

1. Superheat temperature is sensed by cap tube sensing bulb on suction tube at outlet of evaporator coil. This temperature is converted into pressure by refrigerant in the bulb pushing downward on the diaphragm, which opens the valve using the push rods.
2. The suction pressure at the outlet of the evaporator coil is transferred through the external equalizer tube to the underside of the diaphragm.
3. The pin is spring loaded, which exerts pressure on the underside of the diaphragm. Therefore, the bulb pressure works against the spring pressure and evaporator suction pressure to open the valve. If the load increases, the temperature increases at the bulb, which increases the pressure on the top side of the diaphragm. This opens the valve and increases the flow of refrigerant. The increased refrigerant flow causes the leaving evaporator temperature to decrease. This lowers the pressure on the diaphragm and closes the pin. The refrigerant flow is effectively stabilized to the load demand with negligible change in superheat.

Replacing TXV

1. Recover refrigerant.
2. Remove TXV support clamp using a 5/l6 in. nut driver.
3. Remove TXV using a wrench and an additional wrench on connections to prevent damage to tubing.
4. Remove equalizer tube from suction line of coil. Use file or tubing cutter to cut brazed equalizer line approximately 2 inches above suction tube.
5. Remove bulb from vapor tube inside cabinet.
6. Install the new TXV using a wrench and an additional wrench on connections to prevent damage to tubing while attaching TXV to distributor.
7. Attach the equalizer tube to the suction line. If the coil has a mechanical connection, then use a wrench and an additional wrench on connections to prevent damage. If the coil has a brazed connection, use a file or a tubing cutter to remove the mechanical flare nut from the equalizer line. Then use a new coupling to braze the equalizer line to the stub (previous equalizer line) in suction line.
8. Attach TXV bulb in the same location where the original (in the sensing bulb indent) was when it was removed, using the supplied bulb clamps. See Fig. 17.
9. Route equalizer tube through suction connection opening (large hole) in fitting panel and install fitting panel in place.
10. Sweat the inlet of TXV marked “IN” to the liquid line. Avoid excessive heat which could damage the TXV valve. Use quenching cloth when applying heat anywhere on TXV.

1. Third-party trademarks and logos are the property of their respective owners.

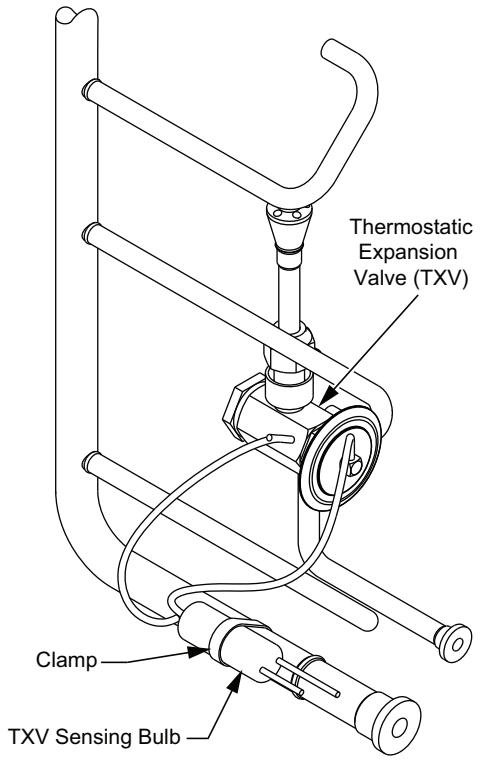

NOTE: Sensing bulb insulation removed for clarity.

Fig. 17 — TXV Valve and Sensing Bulb Location

Refrigerant System Pressure Access Ports

There are 2 access ports in the system: on the suction tube near the compressor and on the discharge tube near the compressor. These are brass fittings with black plastic caps. The hose connection fittings are standard 1/4 in. SAE male flare couplings.

The brass fittings are 2-piece high flow valves, with a receptacle base brazed to the tubing and an integral spring-closed check valve core screwed into the base. See Fig. 18. This check valve is permanently assembled into this core body and cannot be serviced separately; replace the entire core body if necessary. Service tools are available from RCD that allow the replacement of the check valve core without having to recover the entire system refrigerant charge. Apply compressor refrigerant oil to the check valve core's bottom o-ring. Install the fitting body with 96 ± 10 in.-lb (10.85 ± 1.1 Nm) of torque; do not over-tighten.

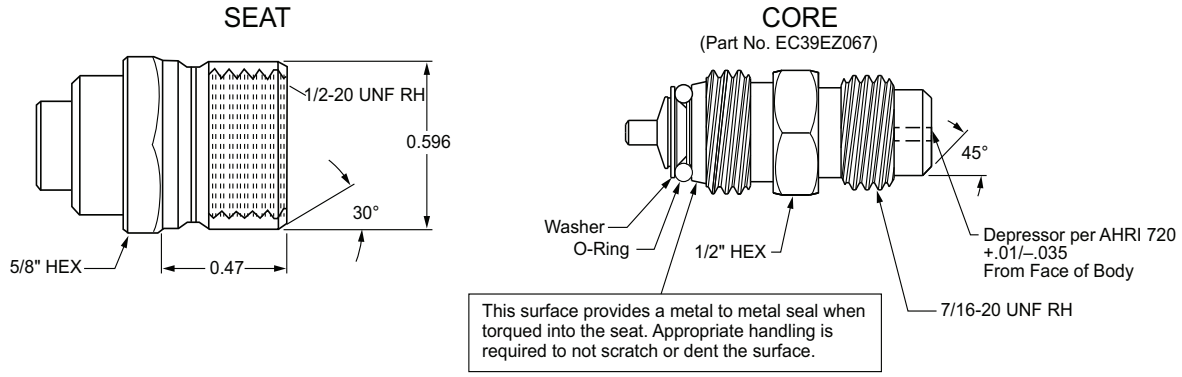

Fig. 18 — CoreMax®[1] Access Port Assembly

1. Third-party trademarks and logos are the property of their respective owners.

PURON (R-410A) REFRIGERANT

This unit is designed for use with Puron® (R-410A) refrigerant. Do not use any other refrigerant in this system.

Puron (R-410A) refrigerant is provided in pink (rose) colored cylinders. These cylinders are available with and without dip tubes; cylinders with dip tubes will have a label indicating this feature. For a cylinder with a dip tube, place the cylinder in the upright position (access valve at the top) when removing liquid refrigerant for charging. For a cylinder without a dip tube, invert the cylinder (access valve on the bottom) when removing liquid refrigerant.

Because Puron (R-410A) refrigerant is a blend, it is strongly recommended that refrigerant always be removed from the cylinder as a liquid. Admit liquid refrigerant into the system in the discharge line. If adding refrigerant into the suction line, use a commercial metering/expansion device at the gauge manifold; remove liquid from the cylinder, pass it through the metering device at the gauge set and then pass it into the suction line as a vapor. Do not remove Puron (R-410A) refrigerant from the cylinder as a vapor.

Refrigerant Charge

Amount of refrigerant charge is listed on the unit's nameplate. Refer to *Carrier GTAC2-5 Charging, Recovery, Recycling and Reclamation* training manual and the following procedures.

Unit panels must be in place when unit is operating during the charging procedure.

NO CHARGE

Use standard evacuating techniques. After evacuating system, weigh in the specified amount of refrigerant.

LOW-CHARGE COOLING

Using Cooling Charging Charts, Fig. 19-24, vary refrigerant until the conditions of the appropriate chart are met. Note the charging charts are different from type normally used. Charts are based on charging the units to the correct sub-cooling for the various operating conditions. Accurate pressure gauge and temperature sensing device are required. Connect the pressure gauge to the service port on the liquid line. Mount the temperature sensing device on the liquid line and insulate it so that outdoor ambient temperature does not affect the reading. Indoor-air cfm must be within the normal operating range of the unit.

50JC SIZE DESIGNATION	NOMINAL TONS REFERENCE
04	3
05	4
06	5

USING COOLING CHARGING CHARTS

Refer to the charging charts to determine what the outdoor coil leaving temperature should be. If the outdoor coil leaving temperature is above the curve add refrigerant. If outdoor coil leaving temperature is below the curve, carefully recover some of the charge. Recheck the outdoor coil leaving pressure as charge is adjusted.

COOLING CHARGING CHARTS

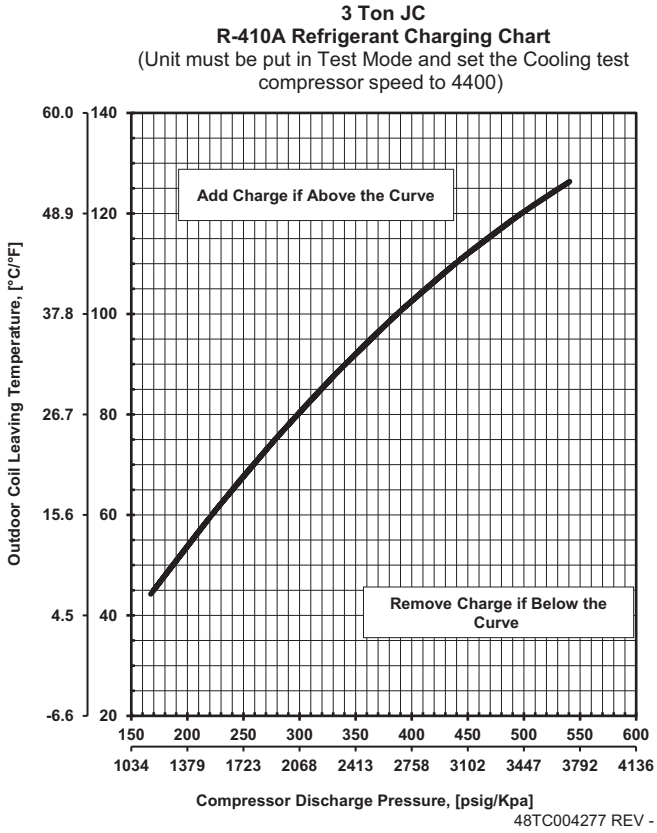

Fig. 19 — Cooling Charging Chart — 3 Ton

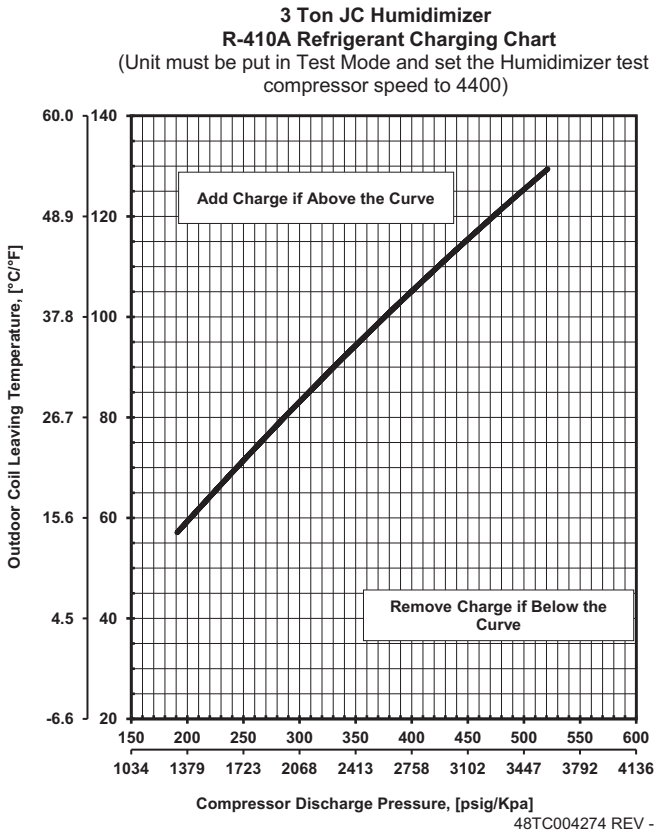

Fig. 20 — Cooling Charging Chart — 3 Ton with Hot Gas Reheat (Humidi-MiZer® System) Option

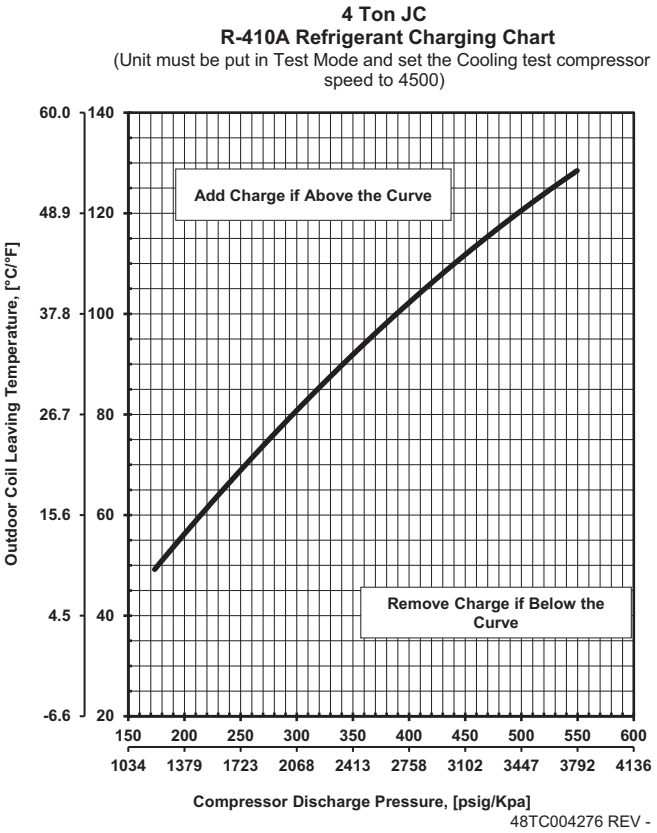

Fig. 21 — Cooling Charging Chart — 4 Ton

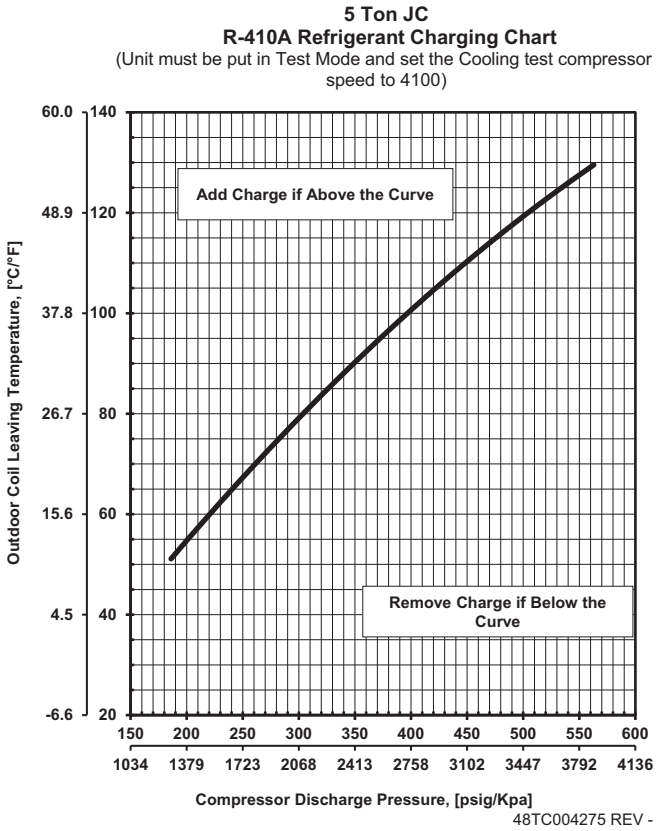

Fig. 23 — Cooling Charging Chart — 5 Ton

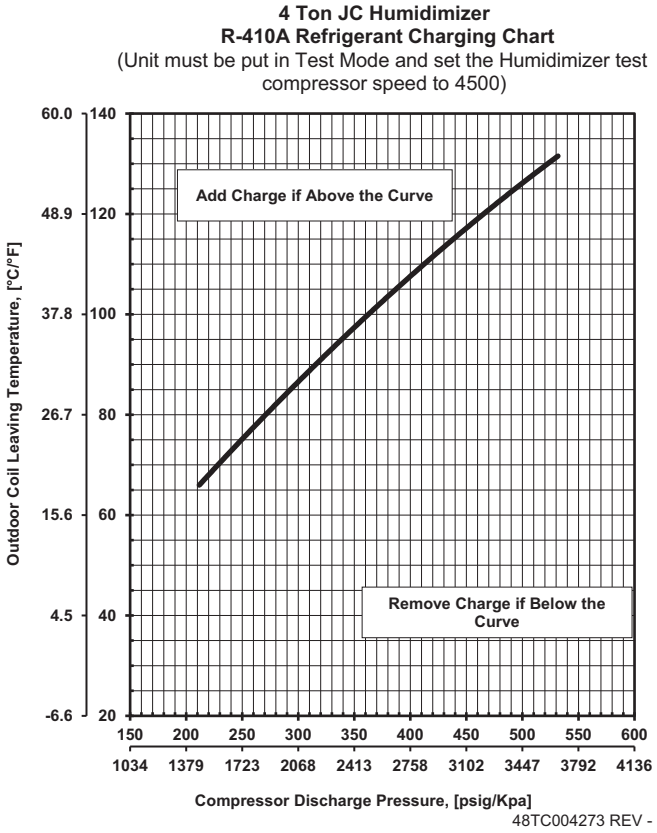

Fig. 22 — Cooling Charging Chart — 4 Ton with Hot Gas Reheat (Humidi-MiZer® System) Option

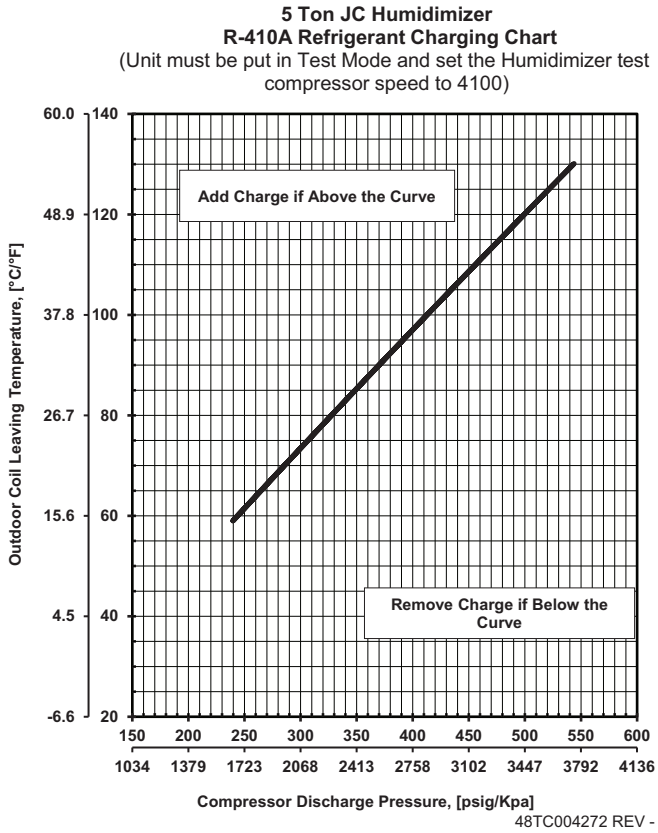

Fig. 24 — Cooling Charging Chart — 5 Ton with Hot Gas Reheat (Humidi-MiZer System) Option

COMPRESSOR

Lubrication

The compressor is charged with the correct amount of oil at the factory.

⚠ CAUTION

UNIT DAMAGE HAZARD

Failure to follow this caution may result in damage to components.

The compressor is in a R-410A refrigerant system and uses a polyolester (POE) oil. This oil is extremely hygroscopic, meaning it absorbs water readily. POE oils can absorb 15 times as much water as other oils designed for HCFC and CFC refrigerants. Avoid exposure of the oil to the atmosphere.

⚠ WARNING

FIRE, EXPLOSION HAZARD

Failure to follow this warning could result in death, serious personal injury and/or property damage.

Never use air or gases containing oxygen for leak testing or for operating refrigerant compressors. Pressurized mixtures of air or gases containing oxygen can lead to an explosion.

⚠ WARNING

FIRE, EXPLOSION HAZARD

Failure to follow this warning could result in death, serious personal injury and/or property damage.

Never use non-certified refrigerants in this product. Non-certified refrigerants could contain contaminates that could lead to unsafe operating conditions. Use ONLY refrigerants that conform to AHRI Standard 700.

Replacing Compressor

NOTE: Only factory-trained service technicians should remove and replace compressor units.

⚠ CAUTION

INSTALLATION SITE DAMAGE

Failure to follow this caution can result in damage to equipment location site.

R-410A refrigerant contains polyolester (POE) oil that can damage the roof membrane. Caution should be taken to prevent POE oil from spilling onto the roof surface.

The factory also recommends that the suction and discharge lines be cut with a tubing cutter instead of using a torch to remove brazed fittings.

Compressor Rotation

⚠ CAUTION

EQUIPMENT DAMAGE HAZARD

Failure to follow this caution can result in premature wear and damage to equipment.

Scroll compressors can only compress refrigerant if rotating in the right direction. Reverse rotation for extended times can result in internal damage to the compressor. Scroll compressors are sealed units and cannot be repaired on site location.

NOTE: When the compressor is rotating in the wrong direction, the unit makes an elevated level of noise and does not provide cooling.

50JC units have scroll compressors; it is important to be certain compressor is rotating in the proper direction. To determine whether or not compressor is rotating in the proper direction:

1. Connect service gauges to suction and discharge pressure fittings.
2. Energize the compressor.
3. The suction pressure should drop and the discharge pressure should rise, as is normal on any start-up.

NOTE: If the suction pressure does not drop and the discharge pressure does not rise to normal levels, the evaporator fan is probably also rotating in the wrong direction.

4. Turn off power to the unit.
5. Reverse any 2 of the 3 unit power leads.
6. Reapply electrical power to the compressor. The suction pressure should drop and the discharge pressure should rise which is normal for scroll compressors on start-up.
7. Replace compressor if suction/discharge pressures are not within specifications for the specific compressor.

The suction and discharge pressure levels should now move to their normal start-up levels.

Filter Drier

Replace whenever refrigerant system is exposed to atmosphere. Only use factory specified liquid-line filter driers with working pressures no less than 650 psig. Do not install a suction-line filter drier in liquid line. A liquid-line filter drier designed for use with Puron refrigerant is required on every unit.

Condenser-Fan Adjustment

1. Shut off unit power supply. Install lockout tag.
2. Remove condenser-fan assembly (grille, motor, and fan). See Fig. 25.
3. Loosen fan hub setscrews.
4. Adjust fan height by pushing fan until it stops on the fan shaft.
5. Tighten set screw to 60 in.-lb (6.78 Nm).
6. Replace condenser-fan assembly. When replacing the condenser-fan assembly follow the screw pattern sequence shown in Fig. 26. The screws must be replaced in the sequence shown in the figure.

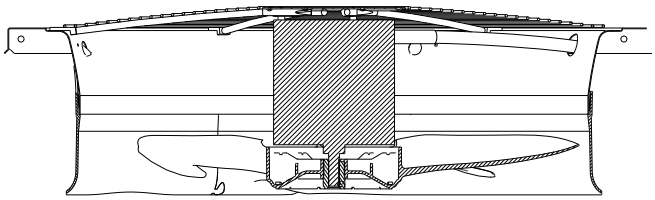

Fig. 25 — Condenser Fan Adjustment

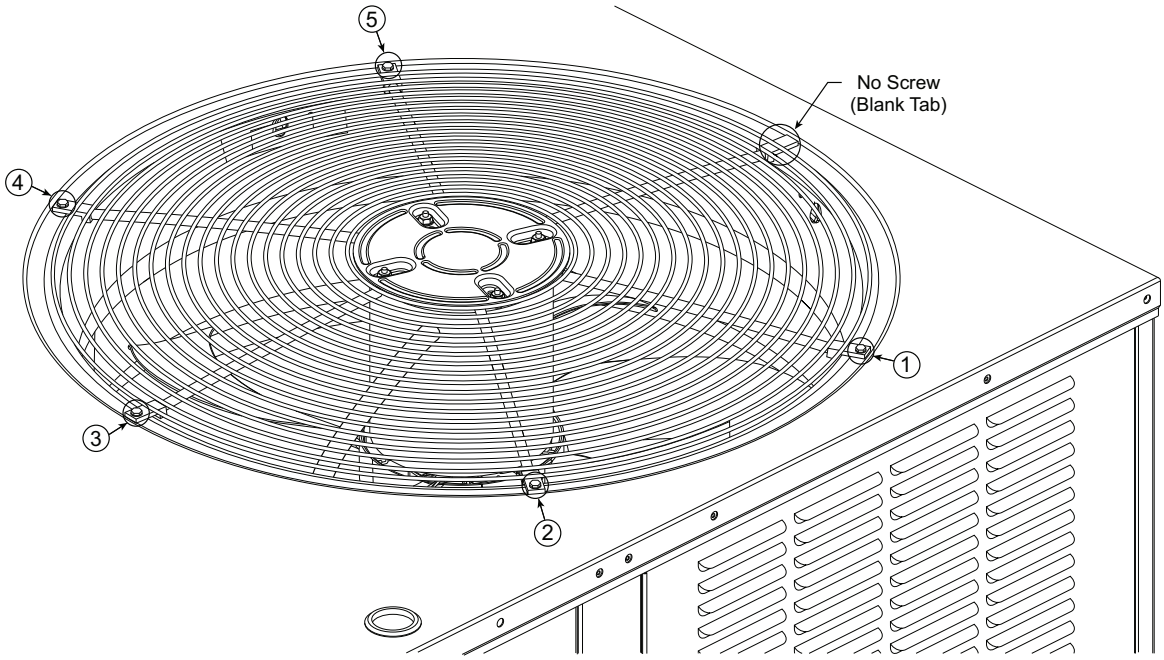

Fig. 26 — Condenser-Fan Assembly — Screw Pattern Sequence

Troubleshooting Cooling System

Refer to Table 2 for additional troubleshooting topics.

Table 2 — Troubleshooting

SYMPTOM	CAUSE	SOLUTION
Compressor and Outdoor Fan Will Not Start	Power failure.	Call power company.
	Fuse blown or circuit breaker tripped.	Replace fuse or reset circuit breaker. Determine root cause.
	Defective thermostat, contactor, transformer, control relay, or capacitor.	Replacement component.
	Insufficient line voltage.	Determine cause and correct.
	Incorrect or faulty wiring.	Check wiring diagram and rewire correctly.
	Thermostat setting too high.	Lower thermostat setting below room temperature.
	High pressure switch tripped.	See problem “Excessive head pressure.”
	Low pressure switch tripped.	Check system for leaks. Repair as necessary.
	Freeze-up protection thermostat tripped.	See problem “Suction pressure too low.”
Compressor Will Not Start but Outdoor Fan Runs	Faulty wiring or loose connections in compressor circuit.	Check wiring and repair or replace.
	Compressor motor burned out, seized, or internal overload open.	Determine cause. Replace compressor or allow enough time for internal overload to cool and reset.
	Defective run/start capacitor, overload, start relay.	Determine cause. Replace compressor or allow enough time for internal overload to cool and reset.
	One leg of 3-phase power dead.	Replace fuse or reset circuit breaker. Determine cause.
Compressor Cycles (Other Than Normally Satisfying Thermostat)	Refrigerant overcharge or undercharge.	Recover refrigerant, evacuate system, and recharge to nameplate.
	Defective compressor.	Replace and determine cause.
	Insufficient line voltage.	Determine cause and correct.
	Blocked outdoor coil or dirty air filter.	Determine cause and correct.
	Defective Run/Start capacitor, overload, start relay.	Determine cause and correct.
	Defective thermostat.	Replace thermostat.
	Faulty outdoor-fan (cooling) or indoor-fan (heating) motor or capacitor.	Replace faulty part.
	Restriction in refrigerant system.	Locate restriction and remove.
	Defective loader plug.	Determine cause and replace.
Compressor Operates Continuously	Dirty air filter.	Replaced filter.
	Unit undersized for load.	Decrease load or increase unit size.
	Thermostat set too low (cooling).	Reset thermostat.
	Low refrigerant charge.	Locate leak; repair and recharge.
	Air in system.	Recover refrigerant, evacuate system, and recharge.
	Outdoor coil dirty or restricted.	Clean coil or remove restriction.

Table 2 — Troubleshooting (cont)

SYMPTOM	CAUSE	SOLUTION
Compressor Makes Excessive Noise	Compressor rotating in the wrong direction.	Reverse the 3-phase power leads as described in Start-Up.
Excessive Head Pressure	Dirty outside.	Replace filter.
	Dirty outdoor coil (cooling).	Clean coil.
	Refrigerant overcharged.	Recover excess refrigerant.
	Air in system.	Recover refrigerant, evacuate system, and recharge.
	Condensing air restricted or air short-cycling.	Determine cause and correct.
Head Pressure Too Low	Low refrigerant charge.	Check for leaks; repair and recharge
	Compressor scroll plates defective.	Replace compressor
	Restriction in liquid tube.	Remove restriction.
Excessive Suction Pressure	High heat load.	Check for source and eliminate.
	Compressor scroll plates defective.	Replace compressor.
	Refrigerant overcharge.	Recover excess refrigerant.
Suction Pressure Too Low	Dirty air filter (cooling).	Replace filter.
	Dirt or heavily iced outdoor coil (heating).	Clean outdoor coil. Check defrost cycle operation.
	Low refrigerant charge.	Check for leaks; repair and recharge.
	Metering device or low side restricted.	Remove source of restriction.
	Insufficient indoor airflow (cooling mode).	Increase air quantity. Check filter and replace if necessary.
	Temperature too low in conditioned area.	Reset thermostat.
	Field-installed filter drier restricted.	Replace.
	Outdoor fan motor(s) not operating (heating).	Check fan motor operation.

CONVENIENCE OUTLETS

⚠ WARNING

ELECTRICAL OPERATION HAZARD

Failure to follow this warning could result in personal injury or death.

Units with convenience outlet circuits may use multiple disconnects. Check convenience outlet for power status before opening unit for service. Locate its disconnect switch, if appropriate, and open it. Lock-out and tag-out this switch, if necessary.

Convenience Outlets

Two types of convenience outlets are offered on 50JC models: non-powered and unit-powered. Both types provide a 125 vac ground-fault circuit-interrupt (GFCI) duplex receptacle rated at 15A behind a hinged waterproof access cover, located on the end panel of the unit. See Fig. 27.

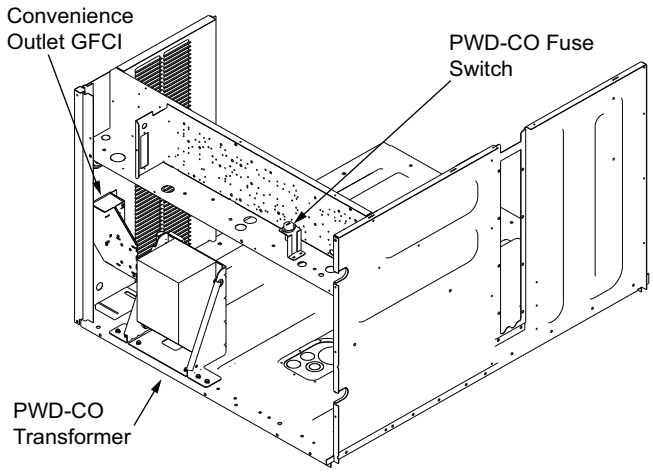

Fig. 27 — Convenience Outlet Location

Installing Weatherproof Cover

A weatherproof while-in-use cover for the factory installed convenience outlets is now required by UL standards. This cover cannot be factory-mounted due to its depth. The cover must be installed at unit installation. For shipment, the convenience outlet is covered with a blank cover plate.

The weatherproof cover kit is shipped in the unit's control box. The kit includes the hinged cover, a backing plate and gasket.

NOTE: DISCONNECT ALL POWER TO UNIT AND CONVENIENCE OUTLET. Use approved lockout/tag-out procedures.

1. Remove the blank cover plate at the convenience outlet; discard the blank cover.
2. Loosen the 2 screws at the GFCI duplex outlet, until approximately 1/2 in. (13 mm) under screw heads is exposed.
3. Press the gasket over the screw heads. Slip the backing plate over the screw heads at the keyhole slots and align with the gasket; tighten the 2 screws until snug (do not over-tighten).
4. Mount the weatherproof cover to the backing plate as shown in Fig. 28.

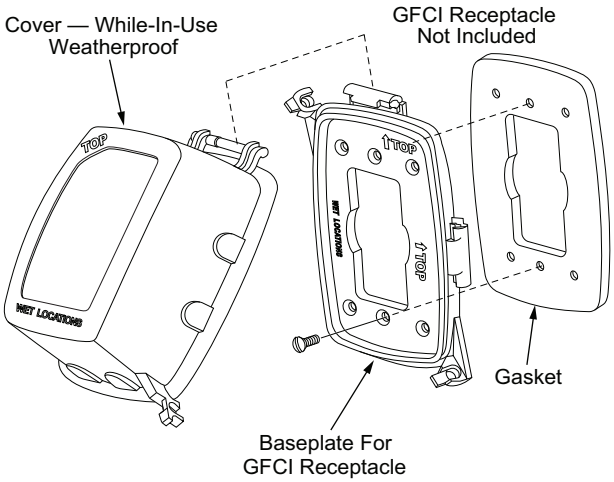

Fig. 28 — Weatherproof Cover Installation

5. Remove 2 slot fillers in the bottom of the cover to permit service tool cords to exit the cover.
6. Check cover installation for full closing and latching.

Non-Powered Type

This type requires the field installation of a general-purpose 125-v 15-A circuit powered from a source elsewhere in the building. Observe national and local codes when selecting wire size, fuse or breaker requirements and disconnect switch size and location. Route 125-v power supply conductors into the bottom of the utility box containing the duplex receptacle.

Unit-Powered Type

A unit-mounted transformer is factory-installed to step-down the main power supply voltage to the unit to 115-v at the duplex receptacle. This option also includes a manual switch with fuse, located in a utility box and mounted on a bracket behind the convenience outlet; access is through the unit's control box access panel. See Fig. 27.

The primary leads to the convenience outlet transformer are not factory-connected. Selection of primary power source is a customer option. If local codes permit, the transformer primary leads can be connected at the line-side terminals on a unit-mounted non-fused disconnect or Heating, Air Conditioning and Refrigeration (HACR) breaker switch; this will provide service power to the unit when the unit disconnect switch or HACR switch is open. Other connection methods will result in the convenience outlet circuit being de-energized when the unit disconnect or HACR switch is open. See Fig. 29.

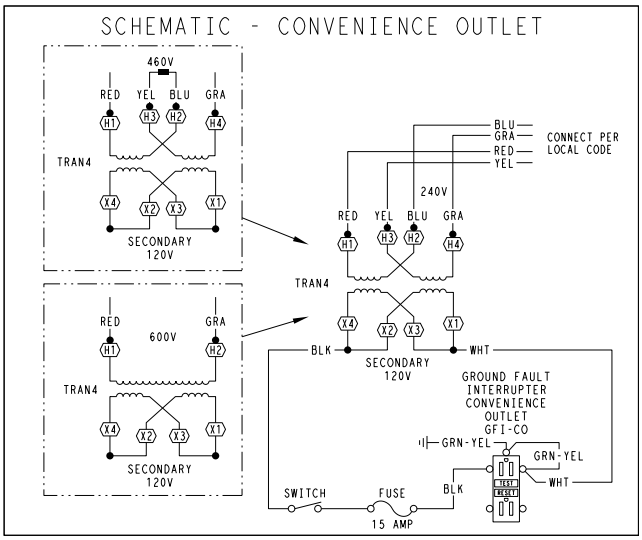

UNIT VOLTAGE	CONNECT AS	PRIMARY CONNECTIONS	TRANSFORMER TERMINALS
208, 230	240	L1: RED +YEL L2: BLU + GRA	H1 + H3 H2 + H4
460	480	L1: RED Splice BLU + YEL L2: GRA	H1 H2 + H3 H4
575	600	L1: RED L2: GRA	H1 H2

Fig. 29 — Powered Convenience Outlet Wiring

Duty Cycle

The unit-powered convenience outlet has a duty cycle limitation. The transformer is intended to provide power on an intermittent basis for service tools, lamps, etc; it is not intended to provide 15A loading for continuous duty loads (such as electric heaters for overnight use). Observe a 50% limit on circuit loading above 8A (i.e., limit loads exceeding 8A to 30 minutes of operation every hour).

Maintenance

Periodically test the GFCI receptacle by pressing the TEST button on the face of the receptacle. This should cause the internal circuit of the receptacle to trip and open the receptacle. Check for proper grounding wires and power line phasing if the GFCI receptacle does not trip as required. Press the RESET button to clear the tripped condition.

Fuse on Powered Type

The factory fuse is a Bussmann™[1] Fusetron™[1] T-15, non-renewable screw-in (Edison base) type plug fuse.

USING UNIT-MOUNTED CONVENIENCE OUTLETS

Units with unit-mounted convenience outlet circuits will often require that 2 disconnects be opened to de-energize all power to the unit. Treat all units as electrically energized until the convenience outlet power is also checked and de-energization is confirmed. Observe National Electrical Code Article 210, Branch Circuits, for use of convenience outlets.

ELECTRIC HEATERS

The 50JC units can be equipped electric heaters as either a factory-installed option or a field-installed accessory. The heaters are modular in design, with heater frames holding open coil resistance wires strung through ceramic insulators and control contactor(s), using a combination of 24-v control side break/auto-reset or line-break/auto-reset limit switches and a pilot-circuit/manual reset limit switch to protect the unit against over-temperature situations. All 50JC Model electric heaters are one module containing either one or 2 banks of electric heat coils.

Heater modules are installed in the compartment below the indoor (supply) fan outlet. Access is through the indoor access panel. Heater modules slide into the compartment on tracks along the bottom of the heater opening. See Fig. 30-32.

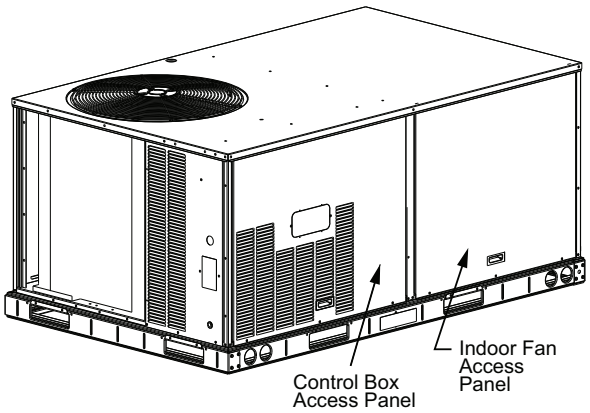

Fig. 30 — Typical Access Panel Location

Not all available heater modules can be used in every unit. Use only those heater modules that are UL listed for use in a specific size unit. Refer to the label on the unit cabinet regarding approved heaters.

1. Third-party trademarks and logos are property of their respective owners.

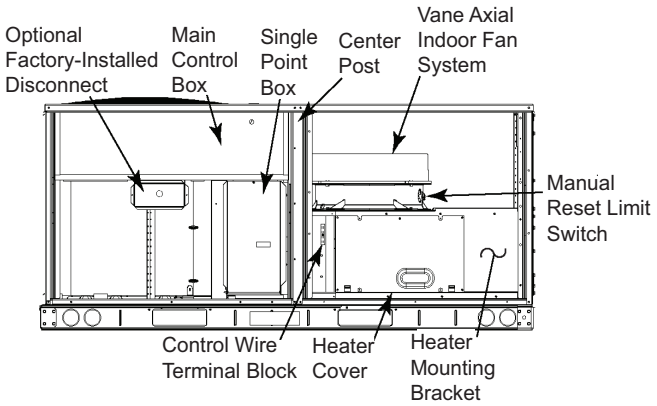

Fig. 31 — Typical Component Location

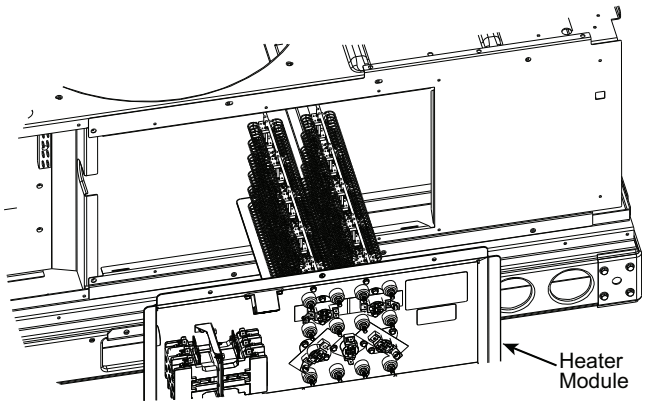

Fig. 32 — Typical Module Installation

SINGLE POINT BOXES AND SUPPLEMENTARY FUSES

When the unit MOCP device value exceeds 60A, unit-mounted supplementary fuses are required for each heater circuit. These fuses are included in accessory single point boxes, with power distribution and fuse blocks. The single point box will be installed directly under the unit control box, just to the left of the partition separating the indoor section (with electric heaters) from the outdoor section. The single point box has a hinged access cover. See Fig. 33.

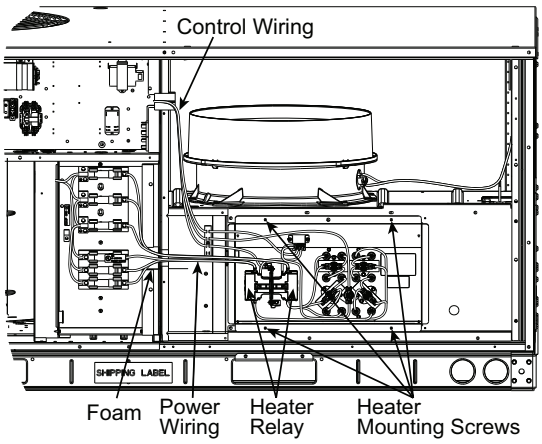

Fig. 33 — Typical Single Point Installation

On 50JC units, all fuses are 60A. Single point boxes containing fuses for 208/230-v applications use UL Class RK5 250-v fuses (Bussmann™[1] FRNR 60 or Ferraz Shawmut TR 60R). Single point boxes for 460-v and 575-v applications use UL Class T 600Hv fuses (Bussmann™[1] JJS 60 or Ferraz Shawmut A6T 60). (Note that all heaters are qualified for use with a 60A fuse, regardless of actual heater ampacity, so only 60A fuses are necessary.)

SAFETY DEVICES

CRHEATERS323A00-340A00 electric heater applications use a combination of 24-v control side break/auto-reset, line-break/non-resettable "one shot" limit switches and a fan stator/manual reset limit switch to protect the unit against overtemperature situations.

Line-break/auto-reset limit switches, 24-v control side break/auto-reset and line-break/non-resettable "one shot" limit switches are mounted on the base plate of each heater module. See Fig. 34. These are accessed through the indoor access panel. Remove the switch by removing 2 screws into the base plate and extracting the existing switch.

Fan stator/manual reset limit switch is located in the side plate of the indoor (supply) fan housing. See Fig. 34.

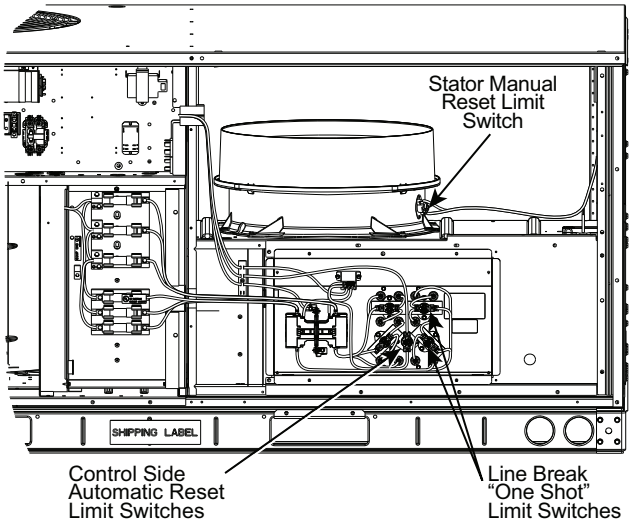

Fig. 34 — Typical Location of Heater Limit Switches

Completing Heater Installation

FIELD POWER CONNECTIONS

Tap conductors must be installed between the base unit's field power connection lugs and the single point box (with or without fuses). See Fig. 35. Refer to unit wiring schematic. Use copper wire only. For connection using the single point box without fuses, connect the field power supply conductors to the heater power leads and the field-supplied tap conductors inside the single point box. Use UL-approved pressure connectors (field-supplied) for these splice joints.

LOW-VOLTAGE CONTROL CONNECTIONS

Pull the low-voltage control leads from the heater module(s) — ORN, VIO and BRN — to the 4-pole terminal board TB4 located on the heater bulkhead to the left of heater 1. Connect the ORN lead to terminal TB4-1. Connect the VIO lead to terminal TB4-2. Connect the BRN lead to terminal TB4-3. See Fig. 35.

1. Third-party trademarks and logos are the property of their respective owners.

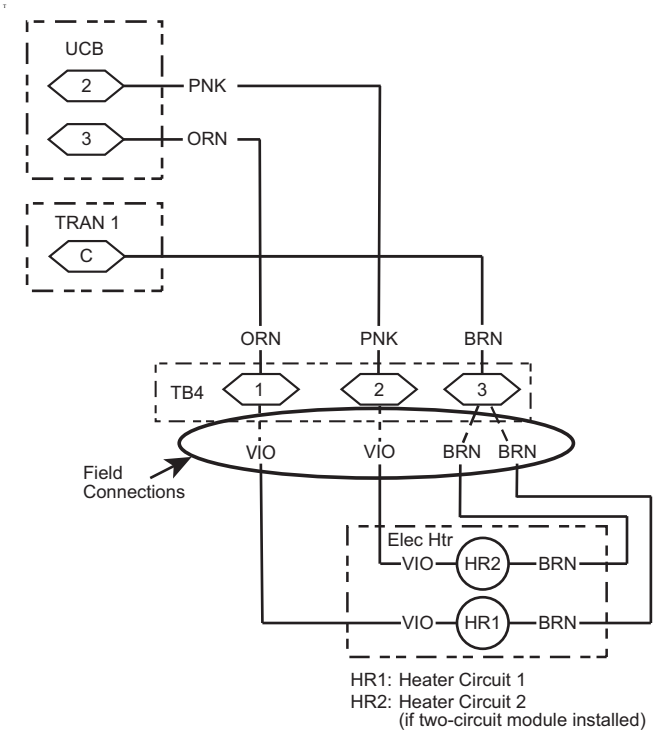

Fig. 35 — Accessory Electric Heater Control Connections

SMOKE DETECTORS

Smoke detectors are available as factory-installed options on 50JC models. Smoke detectors may be specified for supply air only, for return air without or with economizer, or in combination of supply air and return air. Return air smoke detectors are arranged for vertical return configurations only. All components necessary for operation are factory-provided and mounted. The unit is factory-configured for immediate smoke detector shutdown operation; additional wiring or modifications to unit terminal board may be necessary to complete the unit and smoke detector configuration to meet project requirements.

System

The smoke detector system consists of a 4-wire controller and one or 2 sensors. Its primary function is to shut down the rooftop unit in order to prevent smoke from circulating throughout the building. It is not to be used as a life saving device.

Controller

The controller (see Fig. 36) includes a controller housing, a printed circuit board, and a clear plastic cover. The controller can be connected to one or 2 compatible duct smoke sensors. The clear plastic cover is secured to the housing with a single captive screw for easy access to the wiring terminals. The controller has 3 LEDs (for Power, Trouble and Alarm) and a manual test/reset button (on the cover face).

Smoke Detector Sensor

The smoke detector sensor (see Fig. 37) includes a plastic housing, a printed circuit board, a clear plastic cover, a sampling tube inlet and an exhaust tube. The sampling tube (when used) and exhaust tube are attached during installation. The sampling tube varies in length depending on the size of the rooftop unit. The clear plastic cover permits visual inspections without having to disassemble the sensor. The cover attaches to the sensor housing using 4 captive screws and forms an airtight chamber around the sensing electronics. Each sensor includes a harness with an RJ45 terminal for connecting to the controller. Each sensor has 4 LEDs (for Power, Trouble, Alarm and Dirty) and a manual test/reset button (on the left-side of the housing).

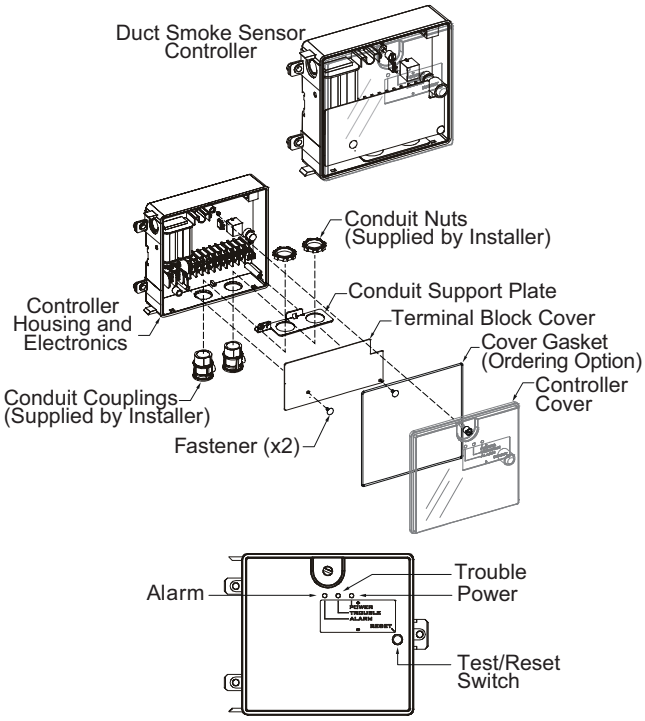

Fig. 36 — Controller Assembly

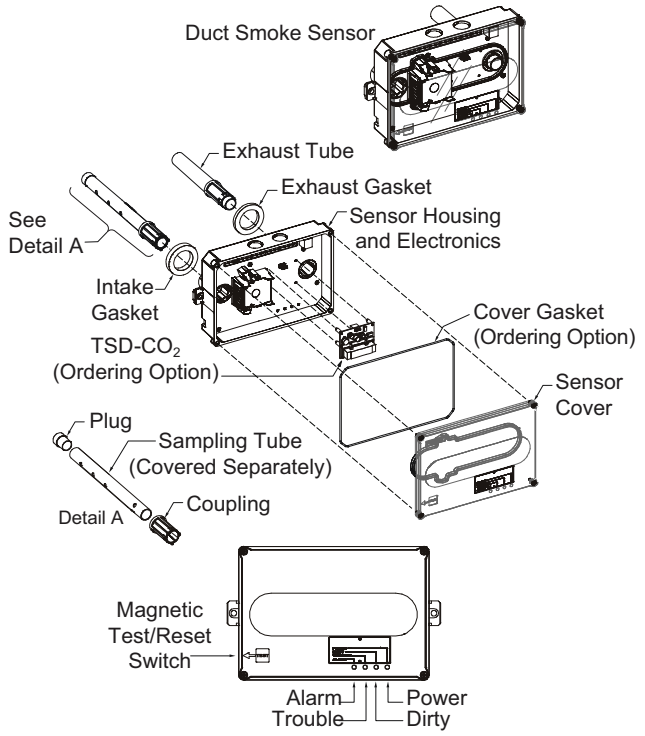

Fig. 37 — Smoke Detector Sensor

Air is introduced to the duct smoke detector sensor's sensing chamber through a sampling tube that extends into the HVAC duct and is directed back into the ventilation system through a (shorter) exhaust tube.

The difference in air pressure between the 2 tubes pulls the sampled air through the sensing chamber. When a sufficient amount of smoke is detected in the sensing chamber, the sensor signals an alarm state and the controller automatically takes the appropriate action to shut down fans and blowers, change over air handling systems, notify the fire alarm control panel, etc.

The sensor uses a process called differential sensing to prevent gradual environmental changes from triggering false alarms. A rapid change in environmental conditions, such as smoke from a fire, causes the sensor to signal an alarm state but dust and debris accumulated over time does not.

The difference in air pressure between the 2 tubes pulls the sampled air through the sensing chamber. When a sufficient amount of smoke is detected in the sensing chamber, the sensor signals an alarm state and the controller automatically takes the appropriate action to shut down fans and blowers, change over air handling systems, notify the fire alarm control panel, etc.

For installations using 2 sensors, the duct smoke detector does not differentiate which sensor signals an alarm or trouble condition.

Smoke Detector Locations

SUPPLY AIR

The supply air smoke detector sensor is located to the right of the unit's indoor (supply) fan. See Fig. 38. Access is through the fan access panel. The sampling tube inlet extends through the fan deck (into a high pressure area). The controller is located on a bracket to the right of the return filter, accessed through the lift-off filter panel.

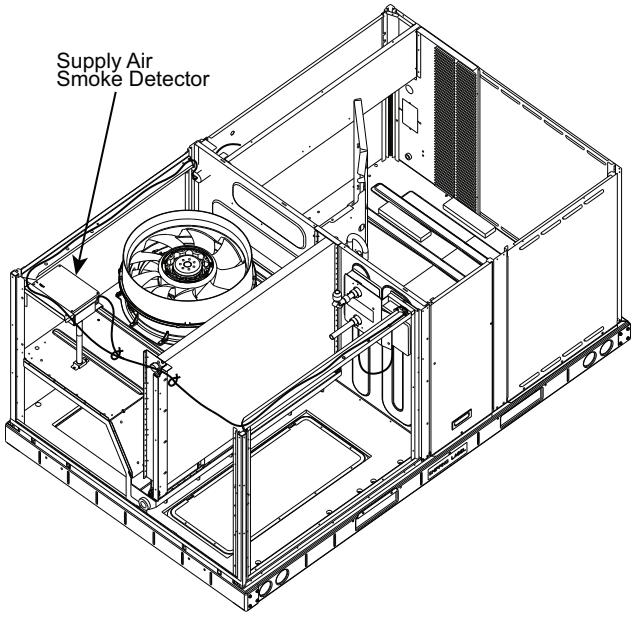

Fig. 38 — Typical Supply Air Smoke Detector Sensor Location

RETURN AIR SMOKE DETECTOR SENSOR WITHOUT ECONOMIZER

The sampling tube is located across the return air opening on the unit basepan. See Fig. 39. The holes in the sampling tube face downward, into the return air stream. The sampling tube is connected through tubing to the return air sensor that is mounted on a bracket high on the partition between return filter and controller location. The sensor is shipped in a flat-mounting location. Installation requires that this sensor be relocated to its operating location and the tubing to the sampling tube be connected. See installation steps.

RETURN AIR SMOKE DETECTOR SENSOR WITH ECONOMIZER

The sampling tube is inserted through the side plates of the economizer housing, placing it across the return air opening on the unit basepan. See Fig. 40. The holes in the sampling tube face downward, into the return air stream. The sampling tube is connected using tubing to the return air sensor mounted on a bracket high on the partition between return filter and controller location. The sensor is shipped in a flat-mounting location. Installation requires the sensor be relocated to its operating location and the tubing to the sampling tube be connected. See installation steps below.

Completing Installation of Return Air Smoke Detector

Use the following steps to complete the installation of the return air smoke detector.

1. Unscrew the 2 screws holding the return air sensor detector plate. See Fig. 41. Save the screws.
2. Remove the return air smoke sensor module and its detector plate.
3. Rotate the detector plate so the sensor is facing outwards and the sampling tube connection is on the bottom. See Fig. 42.
4. Screw the sensor and detector plate into its operating position using screws from Step 1. Ensure the sampling tube connection is on the bottom and the exhaust tube is on the top.
5. Connect the flexible tube on the sampling inlet to the sampling tube on the basepan.
6. For units with an economizer, the sampling tube is integrated into the economizer housing but connecting the flexible tubing to the sampling tube is the same.

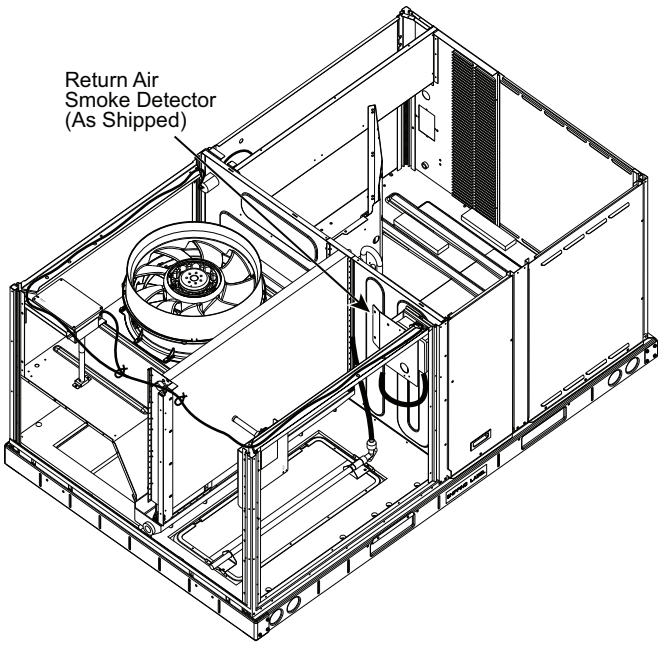

Fig. 39 — Typical Return Air Smoke Detector Location

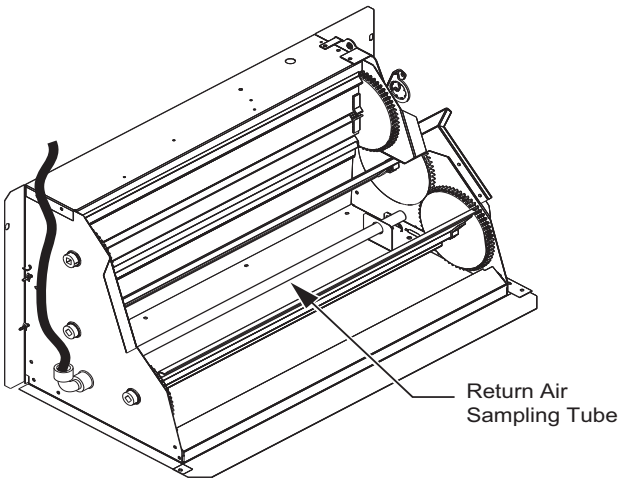

Fig. 40 — Return Air Sampling Tube Location (View reoriented to show opposite side for clarity.)

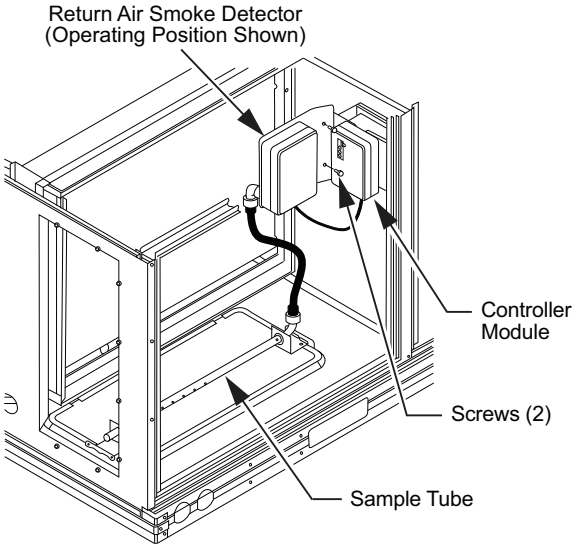

Fig. 42 — Return Air Smoke Detector Operating Position

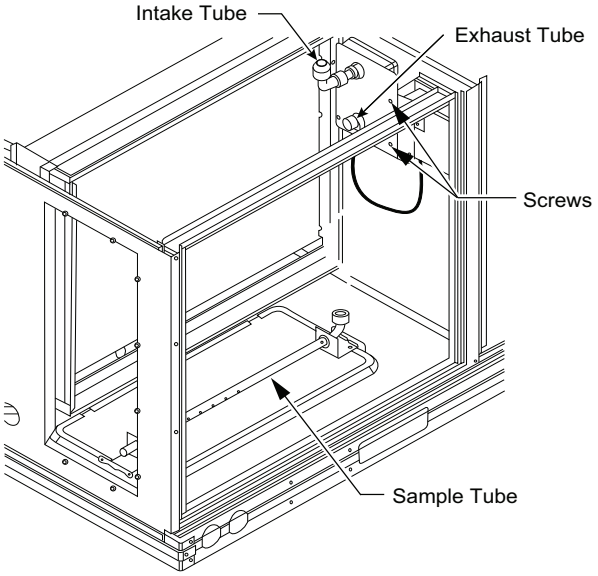

Fig. 41 — Return Air Smoke Detector Shipping Position

FIOP Smoke Detector Wiring and Response

ALL UNITS

The FIOP smoke detector is configured to automatically shut down all unit operations when a smoke condition is detected. See Fig. 43, Smoke Detector Wiring.

HIGHLIGHT A

Smoke detector NC contact set will open on smoke alarm condition, de-energizing the ORN conductor.

USING REMOTE LOGIC

Six conductors are provided for field use (see Highlight B) for additional annunciation functions.

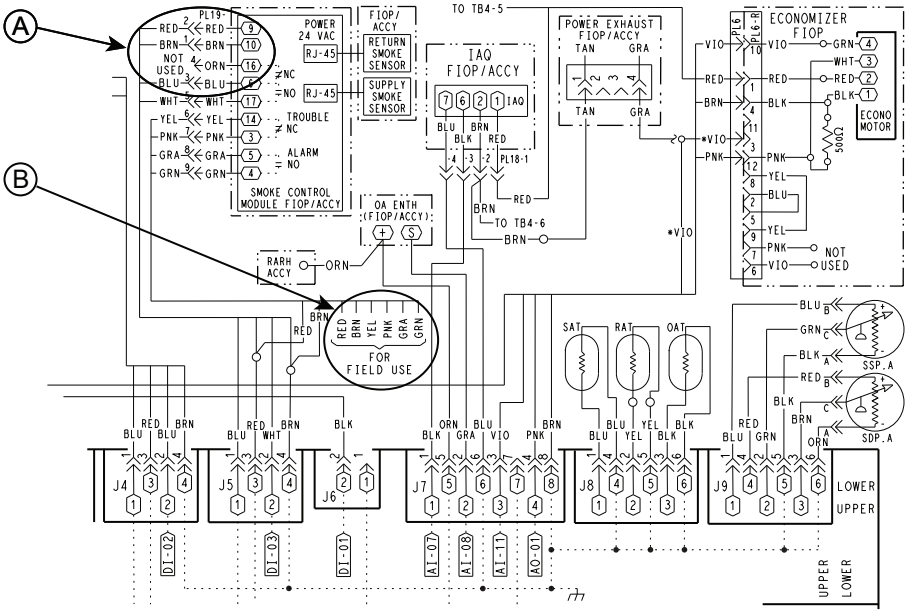

Fig. 43 — Typical Smoke Detector System Wiring

SENSOR AND CONTROLLER TESTS

Sensor Alarm Test

The sensor alarm test checks a sensor's ability to signal an alarm state. This test requires use of a field provided SD-MAG test magnet.

> IMPORTANT: Failure to follow this ALERT can result in an unnecessary evacuation of the facility.
> This test places the duct detector into the alarm state. Unless part of the test, disconnect all auxiliary equipment from the controller before performing the test. If the duct detector is connected to a fire alarm system, notify the proper authorities before performing the test.

SENSOR ALARM TEST PROCEDURE

1. Hold the test magnet where indicated on the side of the sensor housing for 7 seconds.
2. Verify that the sensor's Alarm LED turns on.
3. Reset the sensor by holding the test magnet against the sensor housing for 2 seconds.
4. Verify that the sensor's Alarm LED turns off.

Controller Alarm Test

The controller alarm test checks the controller's ability to initiate and indicate an alarm state.

CONTROLLER ALARM TEST PROCEDURE

1. Press the controller's test/reset switch for 7 seconds.
2. Verify that the controller's Alarm LED turns on.
3. Reset the sensor by pressing the test/reset switch for 2 seconds.
4. Verify that the controller's Alarm LED turns off.

> IMPORTANT: Failure to follow this ALERT can result in an unnecessary evacuation of the facility.
> This test places the duct detector into the alarm state. Unless part of the test, disconnect all auxiliary equipment from the controller before performing the test. If the duct detector is connected to a fire alarm system, notify the proper authorities before performing the test.

Dirty Controller Test

The dirty controller test checks the controller's ability to initiate a dirty sensor test and indicate its results.

> IMPORTANT: Failure to follow this ALERT can result in an unnecessary evacuation of the facility.
> Pressing the controller's test/reset switch for longer than 7 seconds will put the duct detector into the alarm state and activate all automatic alarm responses.

DIRTY CONTROLLER TEST PROCEDURE

1. Press the controller's test/reset switch for 2 seconds.
2. Verify that the controller's Trouble LED flashes.

Dirty Sensor Test

The dirty sensor test provides an indication of the sensor's ability to compensate for gradual environmental changes. A sensor that can no longer compensate for environmental changes is considered 100% dirty and requires cleaning or replacing. A field provided SD-MAG test magnet must be used to initiate a sensor dirty test. The sensor's Dirty LED indicates the results of the dirty test as shown in Table 3.

> IMPORTANT: Failure to follow this ALERT can result in an unnecessary evacuation of the facility.
> Holding the test magnet against the sensor housing for more than 7 seconds will put the duct detector into the alarm state and activate all automatic alarm responses.

Table 3 — Dirty LED Test

FLASHES	DESCRIPTION
1	0-25% dirty (Typical of a newly installed detector)
2	25-50% dirty
3	51-75% dirty
4	76-99% dirty

DIRTY SENSOR TEST PROCEDURE

1. Hold the test magnet where indicated on the side of the sensor housing for 2 seconds.
2. Verify that the sensor's Dirty LED flashes.

> IMPORTANT: Failure to follow this ALERT can result in an unnecessary evacuation of the facility.
> Changing the dirty sensor test operation will put the detector into the alarm state and activate all automatic alarm responses. Before changing dirty sensor test operation, disconnect all auxiliary equipment from the controller and notify the proper authorities if connected to a fire alarm system.

Changing the Dirty Sensor Test

By default, sensor dirty test results are indicated by:

- The sensor's Dirty LED flashing.
- The controller's Trouble LED flashing.
- The controller's supervision relay contacts toggle.

The operation of a sensor's dirty test can be changed so that the controller's supervision relay is not used to indicate test results. When 2 detectors are connected to a controller, sensor dirty test operation on both sensors must be configured to operate in the same manner.

TO CONFIGURE THE DIRTY SENSOR TEST OPERATION

1. Hold the test magnet where indicated on the side of the sensor housing until the sensor's Alarm LED turns on and its Dirty LED flashes twice (approximately 60 seconds).
2. Reset the sensor by removing the test magnet then holding it against the sensor housing again until the sensor's Alarm LED turns off (approximately 2 seconds).

Remote Station Test

The remote station alarm test checks a test/reset station's ability to initiate and indicate an alarm state.

> IMPORTANT: Failure to follow this ALERT can result in an unnecessary evacuation of the facility.
> This test places the duct detector into the alarm state. Unless part of the test, disconnect all auxiliary equipment from the controller before performing the test. If the duct detector is connected to a fire alarm system, notify the proper authorities before performing the test.

SD-TRK4 Remote Alarm Test Procedure

1. Turn the key switch to the RESET/TEST position for 7 seconds.
2. Verify that the test/reset station's Alarm LED turns on.
3. Reset the sensor by turning the key switch to the RESET/TEST position for 2 seconds.
4. Verify that the test/reset station's Alarm LED turns off.

Remote Test/Reset Station Dirty Sensor Test

The test/reset station dirty sensor test checks the test/reset station's ability to initiate a sensor dirty test and indicate the results. It must be wired to the controller as shown in Fig. 44 and configured to operate the controller's supervision relay. For more information, see "Dirty Sensor Test" on page 22.

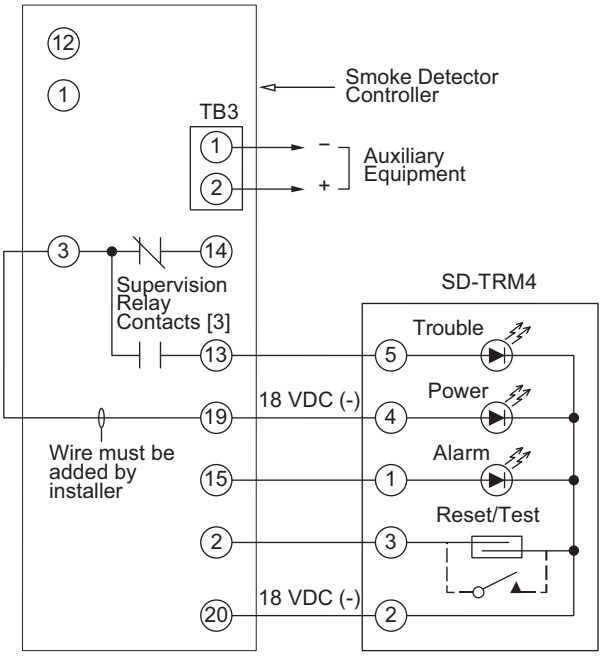

Fig. 44 — Remote Test/Reset Station Connections

> IMPORTANT: Failure to follow this ALERT can result in an unnecessary evacuation of the facility.
> If the test/reset station's key switch is left in the RESET/TEST position for longer than 7 seconds, the detector will automatically go into the alarm state and activate all automatic alarm responses.

> IMPORTANT: Failure to follow this ALERT can result in an unnecessary evacuation of the facility.
> Holding the test magnet to the target area for longer than 7 seconds will put the detector into the alarm state and activate all automatic alarm responses.

Dirty Sensor Test Using an SD-TRK4

1. Turn the key switch to the RESET/TEST position for 2 seconds.
2. Verify that the test/reset station's Trouble LED flashes.

Detector Cleaning

CLEANING THE SMOKE DETECTOR

Clean the duct smoke sensor when the Dirty LED is flashing continuously or sooner, if conditions warrant.

> IMPORTANT: Failure to follow this ALERT can result in an unnecessary evacuation of the facility.
> If the smoke detector is connected to a fire alarm system, first notify the proper authorities that the detector is undergoing maintenance then disable the relevant circuit to avoid generating a false alarm.

1. Disconnect power from the duct detector then remove the sensor's cover. See Fig. 45.

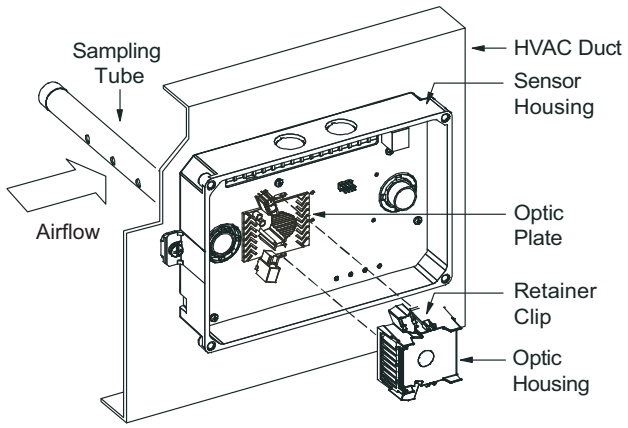

Fig. 45 — Sensor Cleaning Diagram

2. Using a vacuum cleaner, clean compressed air, or a soft bristle brush, remove loose dirt and debris from inside the sensor housing and cover. Use isopropyl alcohol and a lint-free cloth to remove dirt and other contaminants from the gasket on the sensor's cover.
3. Squeeze the retainer clips on both sides of the optic housing.
4. Lift the housing away from the printed circuit board.
5. Gently remove dirt and debris from around the optic plate and inside the optic housing.
6. Replace the optic housing and sensor cover.
7. Connect power to the duct detector then perform a sensor alarm test.

Indicators

NORMAL STATE

The smoke detector operates in the normal state in the absence of any trouble conditions and when its sensing chamber is free of smoke. In the normal state, the Power LED on both the sensor and the controller are on and all other LEDs are off.

ALARM STATE

The smoke detector enters the alarm state when the amount of smoke particulate in the sensor's sensing chamber exceeds the alarm threshold value. (See Table .) Upon entering the alarm state:

- The sensor's Alarm LED and the controller's Alarm LED turn on.
- The contacts on the controller's 2 auxiliary relays switch positions.
- The contacts on the controller's alarm initiation relay close.
- The controller's remote alarm LED output is activated (turned on).
- The controller's high impedance multiple fan shutdown control line is pulled to ground Trouble state.

The SuperDuct™ duct smoke detector enters the trouble state under the following conditions:

- A sensor's cover is removed and 20 minutes pass before it is properly secured.
- A sensor's environmental compensation limit is reached (100% dirty).
- A wiring fault between a sensor and the controller is detected.

An internal sensor fault is detected upon entering the trouble state:

- The contacts on the controller's supervisory relay switch positions. (See Fig. 46.)
- If a sensor trouble, the sensor's Trouble LED the controller's Trouble LED turn on.
- If 100% dirty, the sensor's Dirty LED turns on and the controller's Trouble LED flashes continuously.
- If a wiring fault between a sensor and the controller, the controller's Trouble LED turns on but not the sensor's.

Table 4 — Detector Indicators

CONTROL OR INDICATOR	DESCRIPTION
Magnetic test/ reset switch	Resets the sensor when it is in the alarm or trouble state. Activates or tests the sensor when it is in the normal state.
Alarm LED	Indicates the sensor is in the alarm state.
Trouble LED	Indicates the sensor is in the trouble state.
Dirty LED	Indicates the amount of environmental compensation used by the sensor (flashing continuously = 100%)
Power LED	Indicates the sensor is energized.

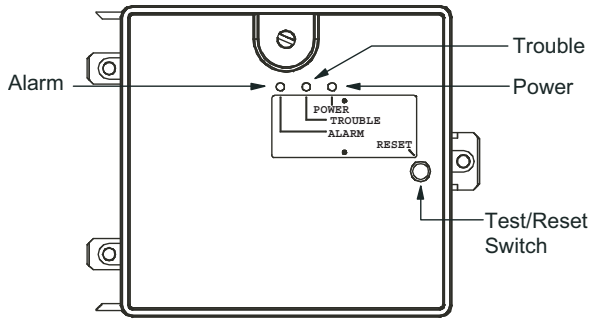

Fig. 46 — Controller Assembly

NOTE: All troubles are latched by the duct smoke detector. The trouble condition must be cleared and then the duct smoke detector must be reset in order to restore it to the normal state.

RESETTING ALARM AND TROUBLE CONDITION TRIPS

Manual reset is required to restore smoke detector systems to Normal operation. For installations using 2 sensors, the duct smoke detector does not differentiate which sensor signals an alarm or trouble condition. Check each sensor for Alarm or Trouble status (indicated by LED). Clear the condition that has generated the trip at this sensor. Then reset the sensor by pressing and holding the reset button (on the side) for 2 seconds. Verify that the sensor's Alarm and Trouble LEDs are now off. At the controller, clear its Alarm or Trouble state by pressing and holding the manual reset button (on the front cover) for 2 seconds. Verify that the controller's Alarm and Trouble LEDs are now off. Replace all panels.

Troubleshooting

CONTROLLER'S TROUBLE LED IS ON

1. Check the Trouble LED on each sensor connected to the controller. If a sensor's Trouble LED is on, determine the cause and make the necessary repairs.
2. Check the wiring between the sensor and the controller. If wiring is loose or missing, repair or replace as required.

CONTROLLER'S TROUBLE LED IS FLASHING

1. One or both of the sensors is 100% dirty.
2. Determine which Dirty LED is flashing then clean that sensor assembly as described in the detector cleaning section.

SENSOR'S TROUBLE LED IS ON

1. Check the sensor's Dirty LED. If it is flashing, the sensor is dirty and must be cleaned.
2. Check the sensor's cover. If it is loose or missing, secure the cover to the sensor housing.
3. Replace sensor assembly.

SENSOR'S POWER LED IS OFF

1. Check the controller's Power LED. If it is off, determine why the controller does not have power and make the necessary repairs.
2. Check the wiring between the sensor and the controller. If wiring is loose or missing, repair or replace as required.

CONTROLLER'S POWER LED IS OFF

1. Make sure the circuit supplying power to the controller is operational. If not, make sure JP2 and JP3 are set correctly on the controller before applying power.
2. Verify that power is applied to the controller's supply input terminals. If power is not present, replace or repair wiring as required.

REMOTE TEST/RESET STATION'S TROUBLE LED DOES NOT FLASH WHEN PERFORMING A DIRTY TEST, BUT THE CONTROLLER'S TROUBLE LED DOES

1. Verify that the remote test/station is wired as shown in Fig. 44. Repair or replace loose or missing wiring.
2. Configure the sensor dirty test to activate the controller's supervision relay. See "Dirty Sensor Test" on page 22.

SENSOR'S TROUBLE LED IS ON, BUT THE CONTROLLER'S TROUBLE LED IS OFF

Remove JP1 on the controller.

PROTECTIVE DEVICES

Compressor Protection

OVERCURRENT

The compressor has internal line-break motor protection.

OVERTEMPERATURE

The compressor has an internal protector to protect it against excessively high discharge gas temperatures.

HIGH PRESSURE SWITCH

The system is provided with a high pressure switch mounted on the discharge line. The switch is stem-mounted and brazed into the discharge tube. Trip setting is 630 psig ± 10 psig (4344 ± 69 kPa) when hot. Reset is automatic at 505 psig (3482 kPa).

LOW PRESSURE SWITCH

The system is protected against a loss of charge and low evaporator coil loading condition by a low pressure switch located on the suction line near the compressor. The switch is stem-mounted. Trip setting is 54 psig ± 5 psig (372 ± 34 kPa). Reset is automatic at 117 ± 5 psig (807 ± 34 kPa).

EVAPORATOR FREEZE PROTECTION

The system is protected against evaporator coil frosting and low temperature conditions by a temperature switch mounted on the evaporator coil hairpin. Trip setting is 30°F ± 5°F (–1°C ± 3°C). Reset is automatic at 45°F (7°C).

SUPPLY (INDOOR) FAN MOTOR PROTECTION

Disconnect and lockout power when servicing fan motor.

The standard supply fan motor is equipped with internal overcurrent and over-temperature protection. Protection devices reset automatically.

The high static option supply fan motor is equipped with a pilot-circuit Thermix combination over-temperature/over-current protection device. This device resets automatically. Do not bypass this switch to correct trouble. Determine the cause and correct it.

CONDENSER FAN MOTOR PROTECTION

The condenser fan motor is internally protected against overtemperature.

Relief Device

A soft solder joint at the suction service access port provides pressure relief under abnormal temperature and pressure conditions (i.e., fire in building). Protect this joint during brazing operations near this joint.

Control Circuit, 24-V

The control circuit is protected against overcurrent conditions by a circuit breaker mounted on control transformer TRAN. Reset is manual.

SYSTEMVU CONTROL SYSTEM

The SystemVu™ control is a comprehensive unit-management system. The control system is easy to access, configure, diagnose and troubleshoot.

The SystemVu control system is fully communicating and cable-ready for connection to the Carrier Comfort Network® (CCN), Carrier i-Vu®, and Third Party BACnet™[1] building management systems. The control provides high-speed communications for remote monitoring via the Internet. Multiple units can be linked together (and to other Direct Digital Control (DDC) equipped units) using a 3-wire communication bus.

The SystemVu control system is easy to access through the use of a integrated display module. A computer is not required for start-up. Access to control menus is simplified by the ability to quickly select from 7 main menu items. An expanded readout provides detailed explanations of control information. Only 6 buttons are required to maneuver through the entire controls menu. The display readout is designed to be visible even in bright sunlight. See Fig. 47.

SystemVu Interface

This integrated device is the keypad interface used to access the control information, read sensor values, and test the unit. The interface is located in the main control box.

Through the SystemVu interface, the user can access all of the inputs and outputs to check on their values and status, configure operating parameters, and evaluate the current decision status for operating modes. The control also includes an alarm history which can be accessed from the display. The user can access a built-in test routine that can be used at start-up commissioning and troubleshooting.

Air Temperature Sensors

The SystemVu controller uses thermistors to sense temperatures used to control operation of the unit. Air temperatures are measured with 10k thermistors. This includes supply-air temperature (SAT), outdoor-air temperature (OAT) and return-air temperature (RAT) sensors. See Fig. 48 for location of these sensors.

Additional SystemVu Installation and Troubleshooting

Additional installation, wiring and troubleshooting information for the SystemVu Controller can be found in the following manual: 48/50JC 04-06 Ultra High Efficiency Single Package Rooftop Units with SystemVu™ Controls Version X.X Controls, Start-up, Operation and Troubleshooting Instructions.

1. Third-party trademarks and logos are the property of their respective owners.

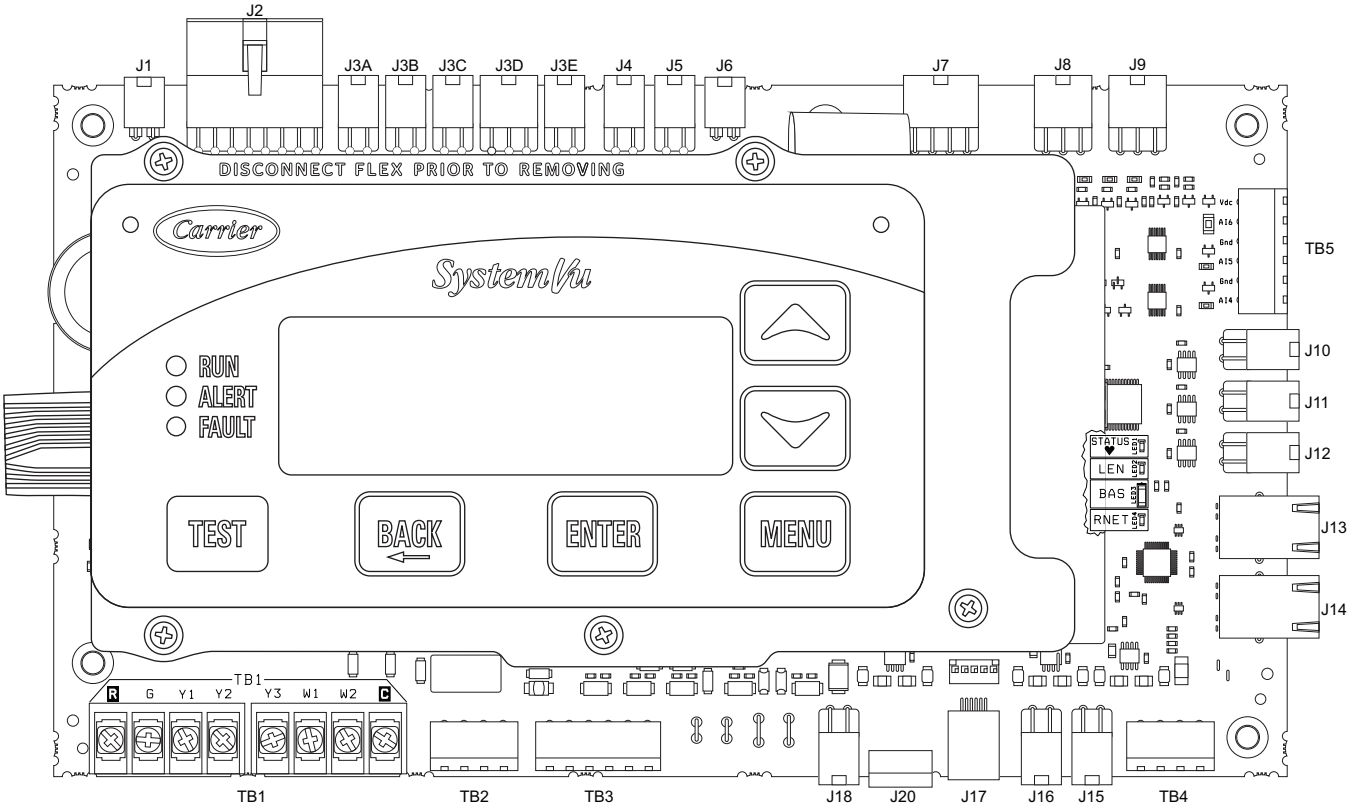

Fig. 47 — SystemVu Control

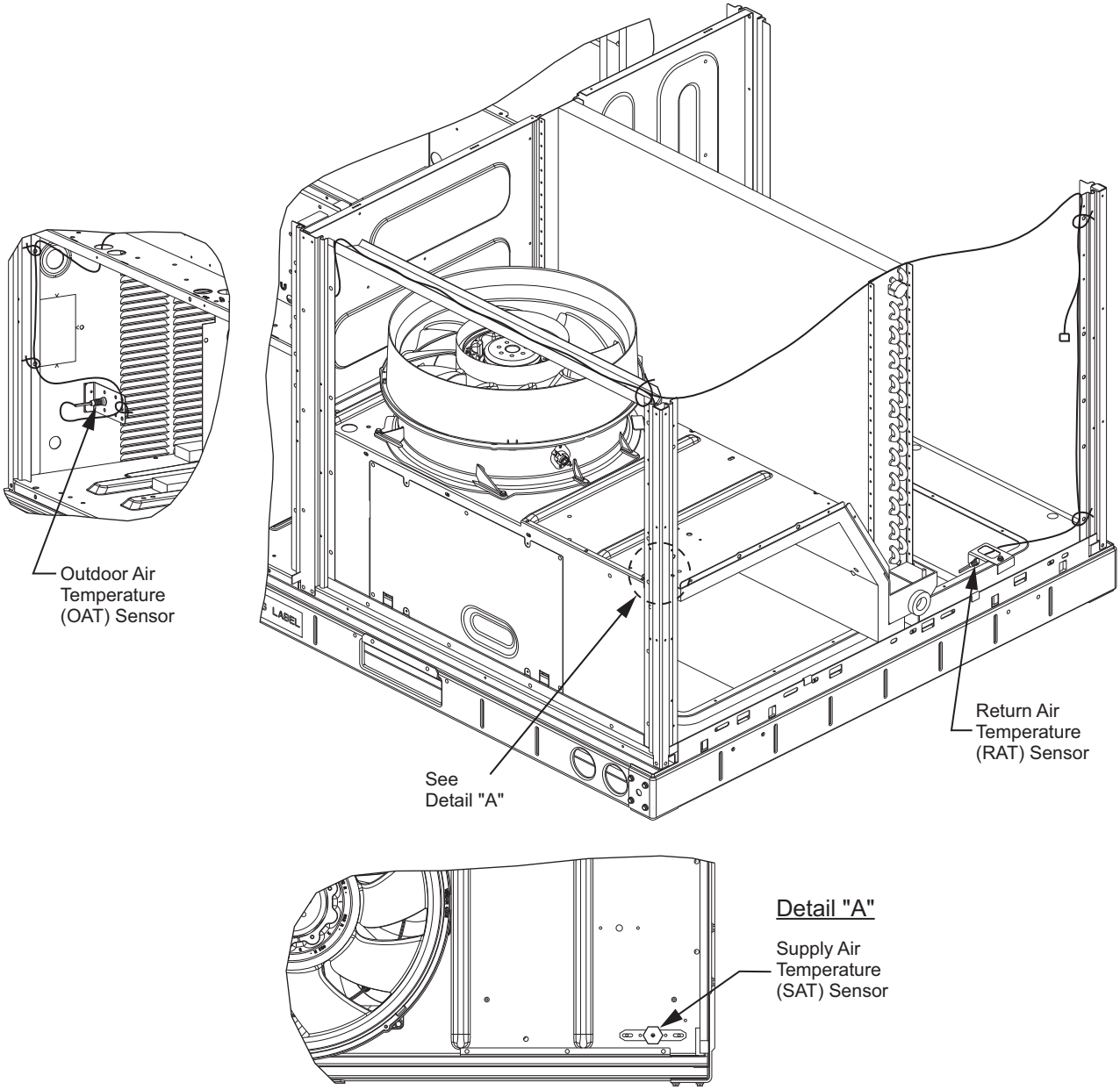

Fig. 48 — Locations of Air Temperature Sensors

COMPRESSOR VFD

The 50JC units are equipped with a variable speed compressor. To control this compressor a Variable Frequency Drive (VFD) is required. This VFD does not look like the typical VFD the industry might be used to. This VFD is not packaged into its own housing to appear as a single component, it is comprised of 5 electronic components mounted in the unit's control box. See Fig. 49 for the control box layout. The 5 components are the main drive board, filter board, capacitor board, choke, and converter board. On 575 volt units the filter board and capacitor board are replaced with 3-phase line reactor.

Drive Board

The drive board is the heart of the VFD. It contains the safety logic and the power conversations needed for the variable speed operation. This drive board will take in the 60 Hz supply voltage and modify it to drive the speed of the compressor, this is done with voltage and frequency. The drive board is responsible for monitoring the safety high pressure switch (HPS) and ensure the compressor is immediately turned off upon HPS trip. There is a discharge line thermistor (DLT) also provided that the drive board monitors. This is for situations where there are high line temperatures without the pressure being high enough to indicate a problem. The drive board has built in logic independent of the SystemVu logic to fold back the speed of the compressor in the event of a high current or high temperature situation. This high current is determine based on the speed ranges, so not just one current limit. The drive board has its own built in start-up and speed ramp protections, however, these are smaller than what the SystemVu controller uses. Review the Compressor Control section for SystemVu controller start and ramp functions found in the 48/50JC 04-06 Ultra High Efficiency Single Package Rooftop Units with SystemVu™ Controls Version X.X Controls, Start-up, Operation and Troubleshooting Instructions manual. There is a heat sink mounted on the back of this drive board to help cool the electronics. The drive board only communicates via Modbus and has local LEDs to show status and errors. The converter board will be used as the primary interface to this drive board, so refer to that section for more details. See Fig. 50 and Table 5 on page 29 for more details on the drive board.

⚠ CAUTION

UNIT DAMAGE HAZARD

Do not bypass the Drive board and pass the standard power supply to the compressor, damage may occur.

⚠ CAUTION

UNIT DAMAGE HAZARD

If replacing the Drive board remove the whole assembly (heat sink and electronic board together). Never separate this assembly on the replacement part.

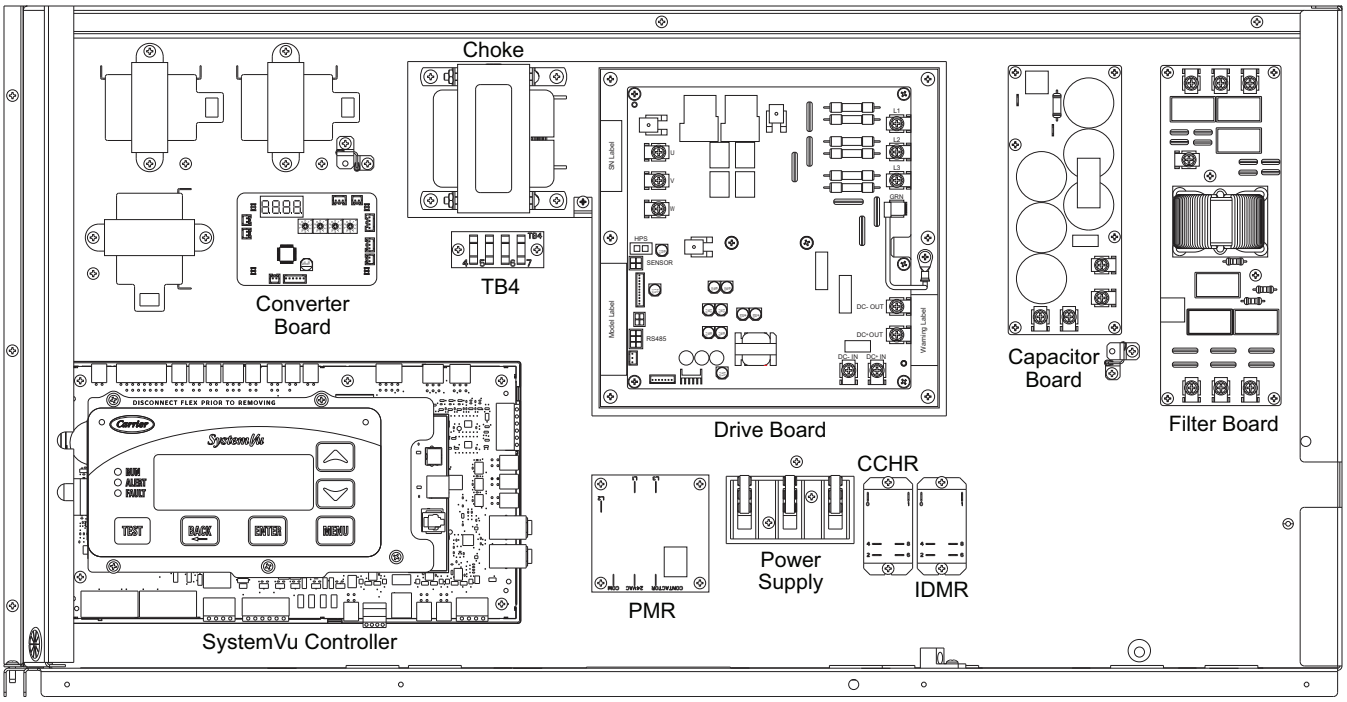

Fig. 49 — Control Box Layout

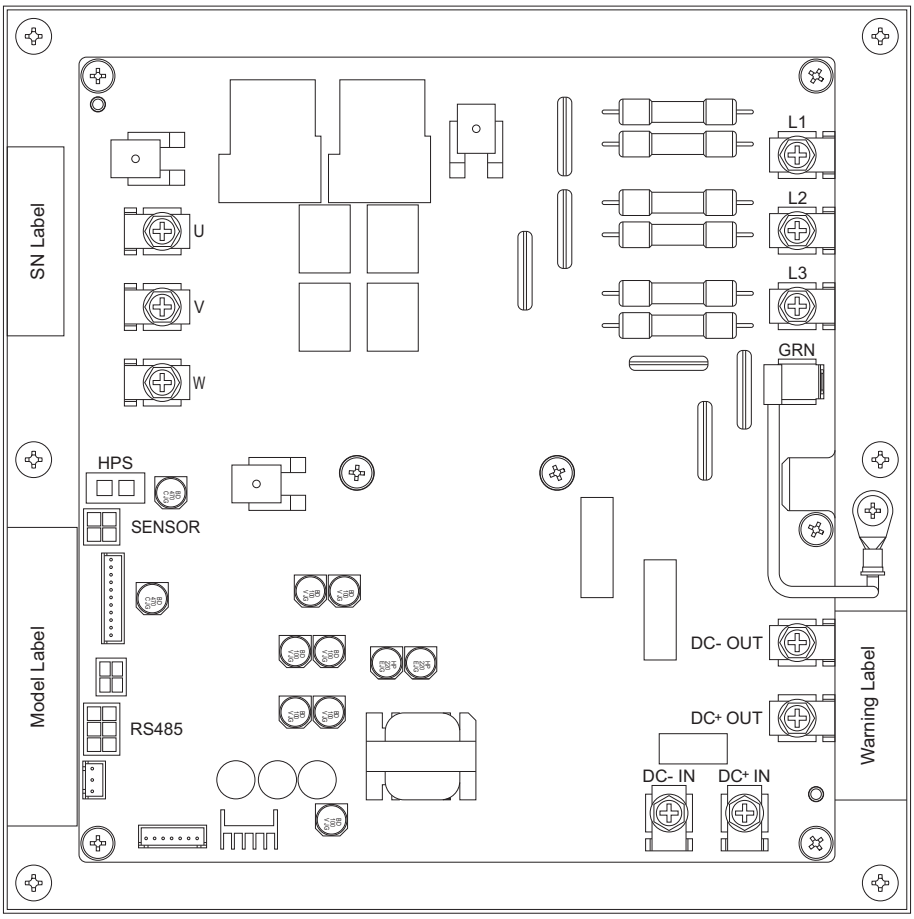

Fig. 50 — Drive Board

Table 5 — Drive Board Inputs/Outputs

TERMINAL LABEL	DESCRIPTION	TYPE	CONNECTOR
HPS	High Pressure switch input	3.3 vdc	2 Pins
SENSOR	DLT sensor input	10k thermistor	Pins 1 and 2 (inner 2 pins)
RS485	Modbus communication with the converter board	RS485 Communication	Pins 1,4, and 5
L1, L2, L3	Supply Power from the filter board	AC high voltage	3x screw terminals
GRN	Supply Ground	Chassis Ground	2x 1/4-in. Quick Connect
DC+OUT, DC-OUT	DC bus out to capacitor board	DC high voltage	2x 1/4-in. Quick Connect
DC+IN, DC-IN	DC bus in from the capacitor board	DC high voltage	2x 1/4-in. Quick Connect
U, V, W	Output to the compressor	AC High voltage	3x screw terminals

Converter Board

The converter board is the primary interface for troubleshooting, as well as SystemVu control's interface to the VFD. The purpose of the converter board is to provide an interface to the drive board while converting the SystemVu control signal into the Modbus communication the drive board requires. The converter board is also responsible for providing configurations to the drive board. This is done through the 4 rotary switches mounted on the board. The required settings are listed below and printed on the unit schematics. See Fig. 51, Table 6, and Table 7 on page 30 for more details on the converter board.

The converter board has a 4-digit display to provide feedback for troubleshooting. It will read "IDLE" when in standby waiting for a signal, and the software version "S##.#" will alternate with "IDLE" during standby. It will show the actual compressor running rpm while performing cooling. It will display an "E-##" if an error occurs in the converter board or drive board. Use the converter board error code table (Table 9) for troubleshooting. If the drive board is folding back the speed to protect the current the running rpm will alternate with "Sd##" where the number indicates the reason for fold back. See Table 8 for the foldback codes.

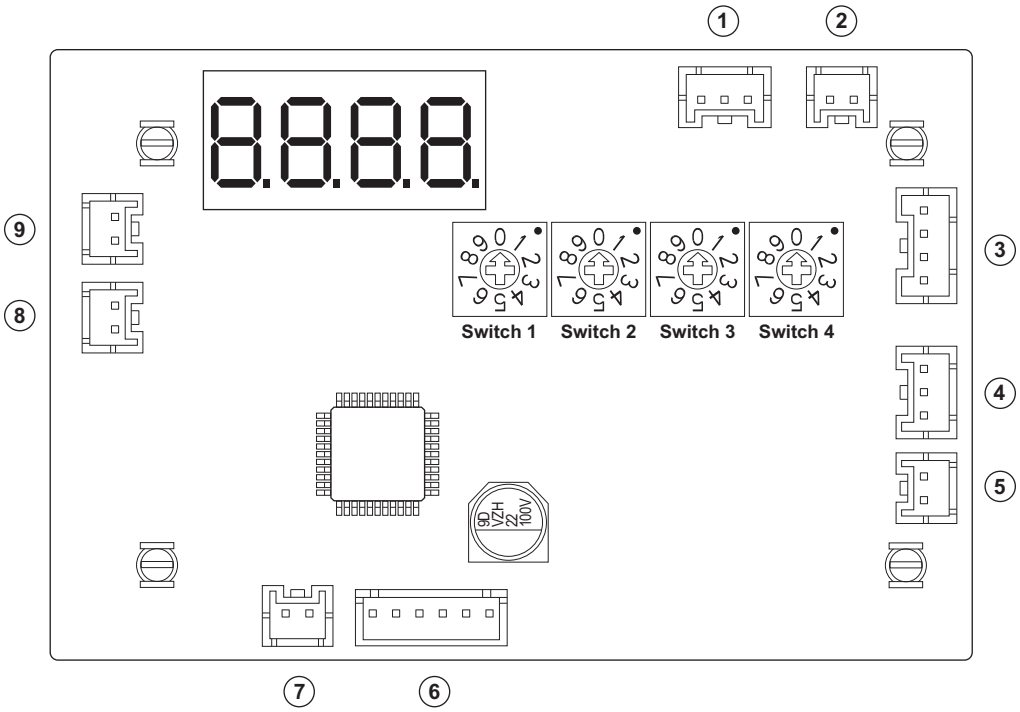

Fig. 51 — Converter Board

Table 6 — Converter Board Inputs/Outputs

REFERENCE NUMBER	DESCRIPTION	TYPE	CONNECTOR
1	Not used	—	—
2	Not used	—	—
3	Modbus communication with the drive board	RS485 Communication	Pins 1,2, and 3
4	Input control from SystemVu	PWM signal	Pins 1 and 3
5	Start/Stop input	24vac	Pins 1 and 2
6	Not used	—	—
7	Power supply	24vac	Pins 1 and 2
8	Not used	—	—
9	Not used	—	—

Table 7 — Converter Board Switch Settings

SIZE	SWITCH 1	SWITCH 2	SWITCH 3	SWITCH 4
04 (3 Ton)	3	3	1	1
05 (4 Ton)	3	4	1	1
06 (5 Ton)	3	5	5	1

Table 8 — Converter Board Foldback Codes

FOLDBACK CODE	FOLDBACK DESCRIPTION
Sd01	Configuration Status (EEPROM/FLASH)
Sd02	Speed Foldback Flag (Output Voltage Limit)
Sd03	PFC Temperature Foldback Status
Sd04	AC Input Current Foldback Status
Sd05	Compressor Phase Current Foldback Status
Sd06	Compressor Power Module Temperature Foldback Status
Sd07	DLT Temperature Foldback Status
Sd08	Output Capacity Foldback Status
Sd09	Autosaved Data Status
Sd10	Speed Foldback Flag (Torque Limit)

Table 9 — Converter Board Error Codes

ERROR CODE	FAULT DESCRIPTION	DRIVE MODBUS REGISTER	ACTION/CAUSE
E-01	Compressor Phase Over Current	Reg.78|80 Bit0	1. Check the U/V/W connections on the drive side. 2. Check the compressor motor windings. 3. Check the compressor is operating within specified limits. 4. Sensor on Drive not reading properly — Replace Drive.
E-02	AC Input Over Current (SW)	Reg.78|80 Bit1	1. Check that the line voltage is no more than 15% below the specified voltage for the drive. Check the line voltage for noise. 2. Check the compressor is operating within specified limits. 3. If the problem persists, then it is possibly a drive component issue. Replace the drive.
E-03	DC Bus Over Voltage (SW)	Reg.78|80 Bit2	1. Check that the line voltage is no more than 15% above the specified voltage for the drive. 2. Check the DC bus voltage if it is >385 vdc. 3. Check the compressor is operating within the specified limits. 4. If the problem still persists, then it is possibly a drive component issue. Replace the drive.
E-04	DC Bus Under Voltage	Reg.78|80 Bit3	1. Check that the line voltage is no more than 15% below the specified voltage for the drive. 2. Check the DC bus voltage if it is <385 vdc. 3. Check the compressor is operating within the specified limits. 4. If the problem still persists, then it is possibly a drive component issue. Replace the drive.
E-05	AC Input Over Voltage	Reg.78|80 Bit4	1. Check that the line voltage is no more than 15% above the specified voltage for the drive. 2. Check the DC bus voltage if it is >385 vdc. 3. Check the compressor is operating within the specified limits. 4. If the problem still persists, then it is possibly a drive component issue. Replace the drive.
E-06	AC Input Under Voltage	Reg.78|80 Bit5	1. Check that the line voltage is no more than 15% below the specified voltage for the drive. 2. Check the DC bus voltage if it is <385 vdc. 3. Check the compressor is operating within the specified limits. 4. If the problem still persists, then it is possibly a drive component issue. Replace the drive.
E-07	Inverter Desaturation	Reg.78|80 Bit6	1. Check if all input cables are connected or any line is missing. 2. Check that the line voltage is no more than 15% below the specified voltage for the drive. If the problem still persists, then it is possibly a drive component issue. Replace the drive.
E-09	High Pressure Switch Fault	Reg.78|80 Bit8	1. Condensing Pressure beyond limit. system issue. 2. Check the high pressure switch.
E-12	Compressor Power Module Over Temp	Reg.78|80 Bit11	1. Verify proper airflow over the heat-sink of the drive. Remove any obstructions. 2. Check that the compressor is operating within specified limits. 3. Check the mounting screws on the drive, make sure they are tight. If the fault, persists replace the drive.
E-13	PFC-IGBT Over Temp	Reg.78|80 Bit12	1. Verify proper airflow over the heat-sink of the drive. Remove any obstructions. 2. Check that the compressor is operating within specified limits. 3. Check the mounting screws on the drive, make sure they are tight. If the fault, persists replace the drive.
E-14	Compressor Startup Fault	Reg.78|80 Bit13	1. Cycle power on the drive. 2. If the problem persists replace the drive.
E-17	DC Voltage Low	Reg.79|81 Bit0	1. Check that the line voltage is no more than 15% below the specified voltage for the drive. 2. Check the DC bus voltage if it is <385 vdc. 3. Check the compressor is operating within specified limits. 4. If the problem still persists, then it is possibly a drive component issue. Replace the drive.
E-18	Compressor Phase Over Current (Intermediate)	Reg.79|81 Bit1	1. Check the U/V/W connections on the drive side. 2. Check the compressor motor windings 3. Check the compressor is operating within specified limits. 4. Sensor on Drive not reading properly — Replace Drive.
E-19	Compressor Phase Current Foldback Timeout	Reg.79|81 Bit2	Check if the compressor is operating outside the specified speed range.
E-20	Compress Power Module Temperature Foldback Timeout	Reg.79|81 Bit3	Compressor phase current ≥ foldback protection value (for 30 seconds). Check if the compressor is operating outside the specified speed range.
E-21	AC Input Current Foldback Timeout	Reg.79|81 Bit4	1. Check that the line voltage is no more than 15% below the specified voltage for the drive. 2. Check the compress is operating within specified limits. 3. If problem persists, replace the drive.
E-22	DLT Temperature Timeout	Reg.79|81 Bit5	1. Check the DLT/Scroll Thermistor connection. 2. Check the compressor is operating within specified limits.
E-23	Auto Config Communication Timeout	Reg.79|81 Bit6	Baud rate or Parity of the system controller not matching with drive. Check whether system controller is working, the Power Cycle the drive.

Table 9 — Converter Board Error Codes (cont)

ERROR CODE	FAULT DESCRIPTION	DRIVE MODBUS REGISTER	ACTION/CAUSE
E-24	Modbus Communication Lost	Reg.79|81 Bit7	1. Check Modbus communication cable connections. 2. Check the communications parameters are set right. 3. Power cycle the drive. 4. If problem persists. replace the drive.
E-25	DLT High Temp	Reg.79|81 Bit8	1. Check the DLT/Scroll Thermistor connection. 2. Check the compressor is operating within specified limits.
E-27	Board Temperature High	Reg.79|81 Bit10	1. Verify proper airflow over the heatsink of the drive. Remove any obstructions. 2. Check that the compressor is operating within specified limits. 3. Check the mounting screws on the drive, make sure they are tight. 4. If the problem still persists replace the drive.
E-28	Compressor Power Module Temperature High	Reg.79|81 Bit11	1. Verify proper airflow over the heatsink of the drive. Remove any obstructions. 2. Check that the compressor is operating within specified limits. 3. Check the mounting screws on the drive, make sure they are tight. 4. If the problem still persists replace the drive.
E-31	Comms to DSP Communication Lost	Reg.79|81 Bit14	1. Check Modbus communication cable connections. 2. Check the communication parameters are set right. 3. Power cycle the drive. 4. If problem persists replace the drive.
E-33	Compressor Phase Current Imbalance	Reg.82|84 Bit0	1. Verify proper airflow over the heatsink of the drive. Remove any obstructions. 2. Check that the compressor is operating within specified limits. 3. Check the mounting screws on the drive, make sure that they are tight. 4. If the problem still persists replace the drive.
E-35	Micro Electronic Fault	Reg.82|84 Bit2	1. DSP self-check error, restart the drive fault should go away. 2. If problem persists replace the drive.
E-39	Compressor Model Configuration Error	Reg.82|84 Bit6	1. Compressor model and configuration code do not match. 2. Check the setting on the Digital switches
E-40	High Pressure Sensor Type Configuration Error	Reg.82|84 Bit7	1. Pressure sensor and configuration code do not match. 2. Check the setting on the Digital switches
E-41	Compressor U-Phase OverCurrent/Sensor Fault	Reg.82|84 Bit8	1. Check the U/V/W connections on the drive side and compressor side. 2. Check the compressor motor windings.
E-42	Compressor V-Phase OverCurrent/Sensor Fault	Reg.82|84 Bit9	1. Check the U/V/W connections on the drive side and compressor side. 2. Check the compressor motor windings.
E-43	Compressor W-Phase OverCurrent/Sensor Fault	Reg.82|84 Bit10	1. Check the U/V/W connections on the drive side and compressor side. 2. Check the compressor motor windings.
E-51	DLT Temp Sensor Open or Short Fault	Reg.83|85 Bit2	1. Check the DLT/Scroll Thermistor connection. 2. Check the compressor is operating within specified limits.
E-54	Power Module Temperature Sensor Open/Short Fault	Reg.83|85 Bit5	1. Verify proper airflow over the heatsink of the drive. Remove any obstructions. 2. Check that the compressor is operating within specified limits. 3. Check the mounting screws on the drive, make sure that they are tight. 4. If the problem still persists replace the drive.
E-55	PFC-IGBT Temperature Sensor Fault Open/Short Fault	Reg.83|85 Bit6	Temperature sensing device on the drive are possibly defective. If problem persists replace the drive.
E-62	Stator Heater Overcurrent	Reg.83|85 Bit13	Compress windings are drawing more current than expected in stator heater mode. If problem persist contact application engineer.
E-64	Fault Limit Lockout	Reg.83|85 Bit15	10 lockout errors in 10 hours. Troubleshoot the original errors.
E-66	Analog Communication Fault		Check the connection between the Converter board and the drive.
E-67	Configuration Setup Fault		1. Check the Digital switches settings. 2. Replace the Converter board.

Filter Board

The Filter board is a support board that helps filter out noise and spikes on the voltage supplied to the Drive board. For troubleshooting, make sure the AC voltage is the same going into the board and coming out of the board. See Fig. 52 and Table 10 for more details on the filter board.

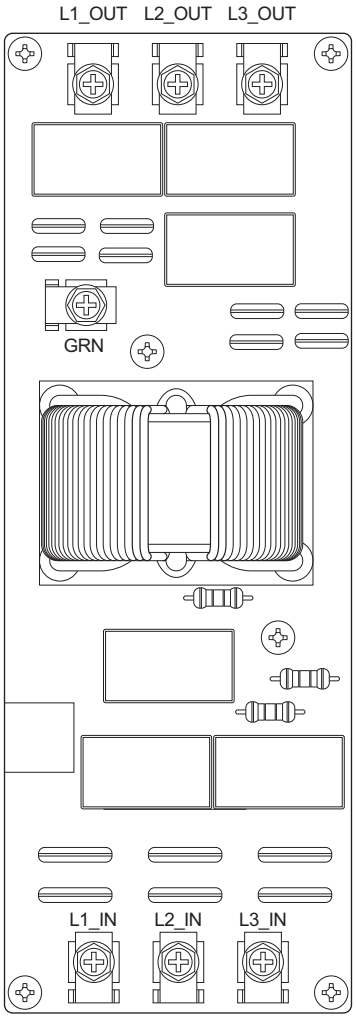

Fig. 52 — Filter Board

Table 10 — Filter Board Inputs/Outputs

TERMINAL LABEL	DESCRIPTION	TYPE	CONNECTOR
L1_IN, L2_IN, L3_IN	Supply Power	AC High voltage	3x screw terminals
GRN	Supply Ground	Chassis Ground	1x screw terminal
L1_OUT, L2_OUT, L3_OUT	Supply Power to Drive board	AC High voltage	3x screw terminals

Capacitor Board

⚠ WARNING

ELECTRICAL SHOCK HAZARD

Failure to follow this warning could result in personal injury, or death.

Unit is equipped with capacitors that take time to discharge after power disconnect. Before performing service or maintenance operations on this unit, ensure the power has been off to the unit and locked out for at least 5 minutes. After removal of the high voltage cover, ensure all LED lights are off.

The Capacitor board is a support board that helps stabilize the DC bus used by the drive board. There is a green LED mounted on the board to indicate it has live voltage. The polarity is sensitive since this is a DC voltage. Inspect the capacitors for bulging when troubleshooting. See Fig. 53 and Table 11 below for more details on the capacitor board.

LINE REACTOR

The line reactor is only used on 575 volt units. It is mounted and used in place of the filter board and capacitor board. The line reactor protects the drive board from noise and spikes on the supply voltage. This is a 3-phase line reactor so there is a filter for each line of the 3-phase power. There are 2 terminals for each phase and not direction sensitive. For troubleshooting, check the voltage for each phase going in and out of the line reactor to ensure they are the same.

CHOKE

The choke is the heaviest component and used to protect the DC bus from voltage spikes. This is wired between the +DC output of the drive board and the +DC input to the capacitor board. It is not direction sensitive so the wires can be swapped. Make sure the voltage is the same leaving the drive board as entering the capacitor board.

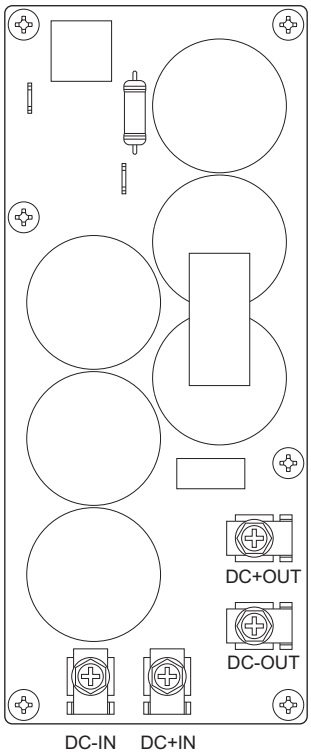

Fig. 53 — Capacitor Board

Table 11 — Capacitor Board Inputs/Outputs

TERMINAL LABEL	DESCRIPTION	TYPE	CONNECTOR
DC+OUT, DC-OUT	DC Bus Out to Drive Board	DC High voltage	2x 1/4-in. Quick Connect
DC+IN, DC-IN	DC Bus In from Drive Board	DC High voltage	2x 1/4-in. Quick Connect

ECONOMIZER SYSTEMS

EconoMi$er 2

The unit may be equipped with a factory-installed or accessory (field-installed) EconoMi$er® 2 system. See Fig. 54 for component locations.

Economizers use direct-drive damper actuators.

IMPORTANT: Any economizer that meets the economizer requirements as laid out in California's Title 24 mandatory section 120.2 (fault detection and diagnostics) and/or prescriptive section 140.4 (life-cycle tests, damper leakage, 5 year warranty, sensor accuracy, etc), will have a label on the economizer. Any economizer without this label does not meet California's Title 24. The 5 year limited parts warranty referred to in section 140.4 only applies to factory installed economizers. Please refer to your economizer on your unit.

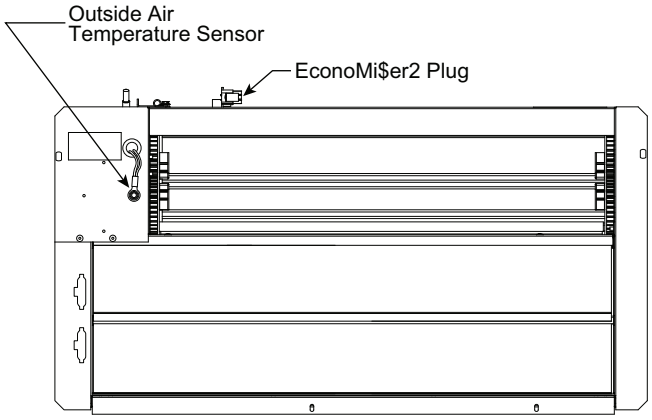

Fig. 54 — EconoMi$er2 Component Locations

IMPORTANT: The optional EconoMi$er® 2 does not include a controller. The EconoMi$er 2 is operated by a 4 to 20 mA signal from an existing field-supplied controller. See Fig. 55 for wiring information.

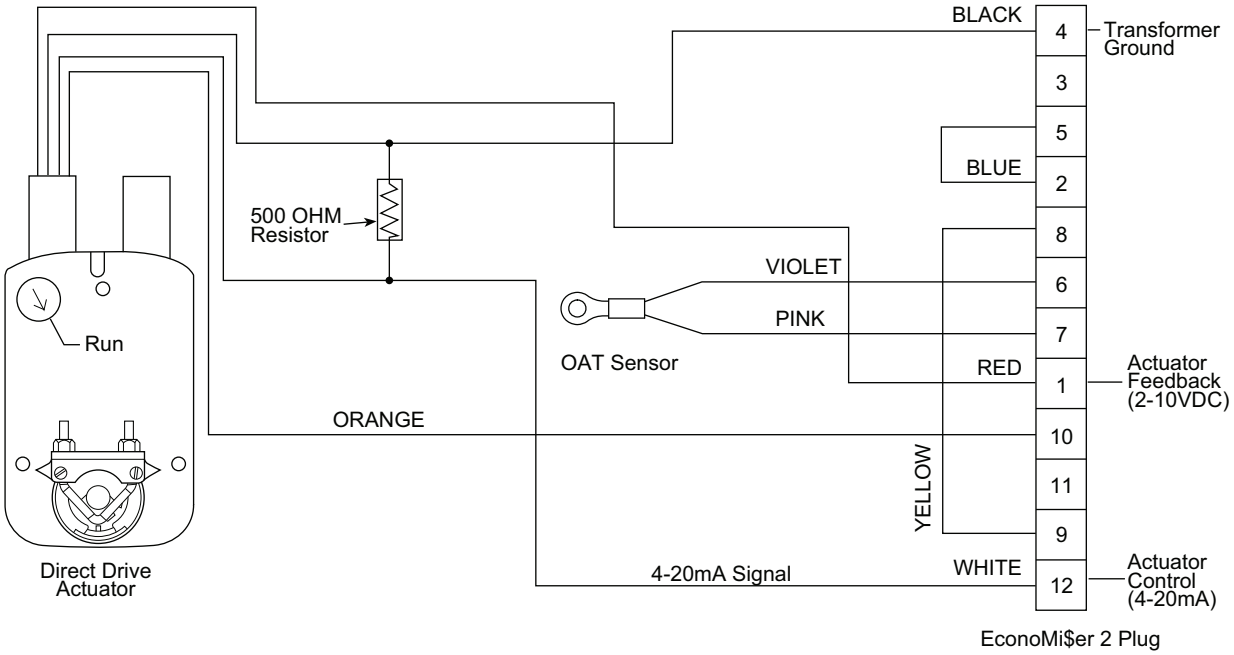

Fig. 55 — EconoMi$er2 with 4 to 20 mA Control Wiring

PRE-START-UP/START-UP

⚠ WARNING

PERSONAL INJURY HAZARD

Failure to follow this warning could result in personal injury or death.

1. Follow recognized safety practices and wear approved Personal Protective Equipment (PPE), including safety glasses and gloves when checking or servicing refrigerant system.
2. Do not use a torch to remove any component. System contains oil and refrigerant under pressure. To remove a component, wear PPE and proceed as follows:
   a. Shut off all electrical power to unit. Apply applicable lockout/tag-out procedures.
   b. Recover refrigerant to relieve all pressure from system using both high-pressure and low pressure ports.
   c. Do not use a torch. Cut component connection tubing with tubing cutter and remove component from unit.
   d. Carefully un-sweat remaining tubing stubs when necessary. Oil can ignite when exposed to torch flame.
3. Do not operate compressor or provide any electric power to unit unless compressor terminal cover is in place and secured.
4. Do not remove compressor terminal cover until all electrical power is disconnected and approved lockout/tag-out procedures are in place.
5. Relieve all pressure from system before touching or disturbing anything inside terminal box whenever refrigerant leak is suspected around compressor terminals.
6. Never attempt to repair a soldered connection while refrigerant system is under pressure.

⚠ WARNING

ELECTRICAL OPERATION HAZARD

Failure to follow this warning could result in personal injury or death.

The unit must be electrically grounded in accordance with local codes and NEC ANSI/NFPA 70 (American National Standards Institute/National Fire Protection Association).

Proceed as follows to inspect and prepare the unit for initial start-up:

1. Remove all access panels.
2. Read and follow instructions on all WARNING, CAUTION, and INFORMATION labels attached to, or shipped with, unit.
3. Make the following inspections:
   a. Inspect for shipping and handling damages such as broken lines, loose parts, or disconnected wires, etc.
   b. Inspect for oil at all refrigerant tubing connections and on unit base. Detecting oil generally indicates a refrigerant leak. Leak-test all refrigerant tubing connections using electronic leak detector, halide torch, or liquid-soap solution.
   c. Inspect all field-wiring and factory-wiring connections. Be sure that connections are completed and tight. Be sure that wires are not in contact with refrigerant tubing or sharp edges.
   d. Inspect coil fins. If damaged during shipping and handling, carefully straighten fins with a fin comb.
4. Verify the following conditions:
   a. Make sure that condenser-fan blade are correctly positioned in fan orifice. See Condenser Fan Adjustment section for more details.
   b. Make sure that air filter(s) is in place.
   c. Make sure that condensate drain trap is filled with water to ensure proper drainage.
   d. Make sure that all tools and miscellaneous loose parts have been removed.

START-UP, GENERAL

Unit Preparation

Make sure that unit has been installed in accordance with installation instructions and applicable codes.

In addition to the base unit start-up (unit with electro-mechanical control), there are a few steps needed to properly start-up units with optional direct digital controls (DDC). The DDC's Service Test function should be used to assist in the base unit start-up and also allows verification of output operation. Controller configuration is also part of start-up. This is especially important when field accessories have been added to the unit. The factory pre-configures options installed at the factory. There may also be additional installation steps or inspection required during the start-up process.

Additional Installation/Inspection

Inspect the field-installed accessories for proper installation, making note of which ones do or do not require configuration changes. Inspect the DDC Alarms for initial insight to any potential issues. Refer to the Controls, Start-up, Operation and Troubleshooting Instructions manual for the specific DDC. Inspect the SAT sensor for relocation as intended during installation. Inspect special wiring as directed below.

Return-Air Filters

Ensure correct filters are installed in unit (see Appendix B — Physical Data on page 39). Do not operate unit without return-air filters.

Outdoor-Air Inlet Screens

Outdoor-air inlet screen must be in place before operating unit.

Compressor Mounting

Compressors are internally spring mounted. Do not loosen or remove compressor hold down bolts.

Internal Wiring

Check all electrical connections in unit control boxes. Tighten as required.

Refrigerant Service Ports

Each unit system has two 1/4 in. SAE flare (with check valves) service ports: one on the suction line, and one on the compressor discharge line. Be sure that caps on the ports are tight.

Compressor Rotation

⚠ CAUTION

EQUIPMENT DAMAGE HAZARD

Failure to follow this caution can result in premature wear and damage to equipment.

Scroll compressors can only compress refrigerant if rotating in the right direction. Reverse rotation for extended times can result in internal damage to the compressor. Scroll compressors are sealed units and cannot be repaired on site location.

50JC units use scroll compressors; it is important to be certain compressor is rotating in the proper direction. To determine whether or not compressor is rotating in the proper direction:

1. Connect service gauges to suction and discharge pressure fittings.
2. Energize the compressor.
3. The suction pressure should drop and the discharge pressure should rise, as is normal on any start-up.

If the suction pressure does not drop and the discharge pressure does not rise to normal levels:

1. Note that the evaporator fan is probably also rotating in the wrong direction.
2. Turn off power to the unit and install lockout tag.
3. Reverse any 2 of the unit power leads.
4. Re-energize to the compressor. Check pressures.

The suction and discharge pressure levels should now move to their normal start-up levels.

NOTE: When the compressor is rotating in the wrong direction, the unit will make an elevated level of noise and will not provide cooling.

Cooling

Set space thermostat to OFF position. To start unit, turn on main power supply. Set system selector switch at COOL position and fan switch at AUTO. position. Adjust thermostat to a setting below room temperature. Compressor starts on closure of contactor.

Check unit charge. Refer to Refrigerant Charge section on page 12.

Reset thermostat at a position above room temperature. Compressor will shut off. Evaporator fan will shut off after a 30-second delay.

To shut off unit, set system selector switch at OFF position. Resetting thermostat at a position above room temperature shuts unit off temporarily until space temperature exceeds thermostat setting.

Heating

To start unit, turn on main power supply. Set system selector switch to the HEAT position and set thermostat at a setting above room temperature. Set fan to AUTO position.

First stage of thermostat energizes the first stage of the electric heaters. Second stage of thermostat energizes the second stage of electric heaters (if installed). Check heating effects at air supply grille(s).

If electric heaters do not energize, reset limit switch (located on supply-fan scroll) by pressing button located between terminals on the switch.

To shut unit off, set system selector switch to the OFF position. Resetting thermostat at a position below room temperature temporarily shuts unit off until space temperature falls below thermostat setting.

Ventilation (Continuous Fan)

Set fan and system selector switches at ON and OFF positions, respectively. Evaporator fan operates continuously to provide constant air circulation.

FASTENER TORQUE VALUES

Heat shield screws	30 in.-lb (3.4 Nm) ±2 in.-lb (0.2 Nm)
Stator motor mounting screws	23 in.-lb (2.6 Nm) ±2 in.-lb (0.2 Nm)
Fan rotor mounting screws	23 in.-lb (2.6 Nm) ±2 in.-lb (0.2 Nm)
Limit switch screws	50 in.-lb (5.7 Nm) ±5 in.-lb (0.6 Nm)
Fan deck bracket screws	50 in.-lb (5.7 Nm) ±5 in.-lb (0.6 Nm)
Condenser fan motor mounting screws	30 in.-lb (3.4 Nm) ±3 in.-lb (0.3 Nm)
Condenser fan hub set screw	60 in.-lb (6.8 Nm) ±5 in.-lb (0.6 Nm)
Compressor mounting bolts	65 in.-lb (7.3 Nm) +10 in.-lb (1.2 Nm)

START-UP, SYSTEMVU CONTROLS

IMPORTANT: SET-UP INSTRUCTIONS

Installation, wiring and troubleshooting information for the SystemVu™ Controller can be found in the following manual: 48/50JC 04-06 Ultra High Efficiency Single Package Rooftop Units with SystemVu™ Controls Version X.X Controls, Start-up, Operation and Troubleshooting Instructions. Have a copy of this manual available at unit start-up.

APPENDIX A — MODEL NUMBER NOMENCLATURE

Position:	1	2	3	4	5	6	7	8	9	10	11	12	13	14	15	16	17	18
Example:	5	0	J	C	-	V	0	6	A	2	A	5	-	3	A	0	A	0

Unit Heat Type
50 = Electric/Electric Packaged Rooftop

Model Series - WeatherExpert®
JC = Ultra High Efficiency

Heat Options
- = No Heat
A = Low Electric Heat
B = Medium Electric Heat
C = High Electric Heat

Refrig. Systems Options
V = Variable Speed Cooling Capacity
W= Variable Speed Cooling Capacity with Humidi-MiZer® System

Cooling Tons
04 = 3 ton
05 = 4 ton
06 = 5 ton

Sensor Options
A = None
B = RA (Return Air) Smoke Detector
C = SA (Supply Air) Smoke Detector
D = RA + SA Smoke Detector
E = CO_2
F = RA Smoke Detector and CO_2
G = SA Smoke Detector and CO_2
H = RA + SA Smoke Detector and CO_2
J = Condensate Overflow Switch
K = Condensate Overflow Switch and RA Smoke Detector
L = Condensate Overflow Switch and RA and SA Smoke Detectors
M = Condensate Overflow Switch and SA Smoke Detector
N = Condensate Overflow Switch and CO_2
P = Condensate Overflow Switch w/ CO_2 + RA Smoke Detector
Q = Condensate Overflow Switch w/ CO_2 + SA Smoke Detector
R = Condensate Overflow Switch w/ CO_2 + RA and SA Smk. Det.

Vane Axial Fan - Indoor Fan Options
1 = Direct Drive EcoBlue™ — Standard Static
2 = Direct Drive EcoBlue — Medium Static
3 = Direct Drive EcoBlue — High Static

Coil Options - Round Tube/Plate Fin Condenser Coil (Outdoor - Indoor - Hail Guard)
A = Al/Cu — Al/Cu
B = Precoat Al/Cu — Al/Cu
C = E-coat Al/Cu — Al/Cu
D = E-coat Al/Cu — E-coat Al/Cu
E = Cu/Cu — Al/Cu
F = Cu/Cu — Cu/Cu
M = Al/Cu — Al/Cu — Louvered Hail Guard
N = Precoat Al/Cu — Al/Cu — Louvered Hail Guard
P = E-coat Al/Cu — Al/Cu — Louvered Hail Guard
Q = E-coat Al/Cu — E-coat Al/Cu — Louvered Hail Guard
R = Cu/Cu — Al/Cu — Louvered Hail Guard
S = Cu/Cu — Cu/Cu — Louvered Hail Guard

Voltage
1 = 575/3/60
5 = 208-230/3/60
6 = 460/3/60

Design Revision
- = Factory Design Revision

Base Unit Controls
3 = SystemVu™ Controls — Standard all units

Air Intake / Exhaust Options
A = None
B = EconoMi$er® 2 Temperature Economizer with Barometric Relief
F = EconoMi$er 2 Enthalpy Economizer with Barometric Relief
U = Ultra Low Leak EconoMi$er 2 Temperature Economizer with Barometric Relief
W= Ultra Low Leak EconoMi$er 2 Enthalpy Economizer with Barometric Relief

Service Options (Foil-Faced Insulation Standard)
0 = None
1 = Unpowered Convenience Outlet
2 = Powered Convenience Outlet
3 = Hinged Access Panels
4 = Hinged Access Panels and Unpowered Convenience Outlet
5 = Hinged Panels and Powered Convenience Outlet
6 = MERV 8 High Efficiency Filters
7 = MERV 8 High Efficiency Filters and Unpowered Convenience Outlet
8 = MERV 8 High Efficiency Filters and Powered Convenience Outlet
9 = MERV 8 High Efficiency Filters and Hinged Panels
A = MERV 8 High Efficiency Filters, Hinged Panels and Unpowered Convenience Outlet
B = MERV 8 High Efficiency Filters, Hinged Panels and Powered Convenience Outlet

Electrical Options
A = None
B = HACR Breaker
C = Non-Fused Disconnect (NFD)
D = Thru-The-Base (TTB) Connections
E = HACR Circuit Breaker and TTB
F = Non-Fused Disconnect and TTB
N = Phase Monitor Protection
P = Phase Monitor and HACR
Q = Phase Monitor and NFD
R = Phase Monitor and TTB
S = Phase Monitor and HACR and TTB
T = Phase Monitor and NFD and TTB

Factory Assigned
0 = Standard
1 = LTL

Fig. A — Model Number Nomenclature

APPENDIX B — PHYSICAL DATA

50JC 3 to 5 Ton Physical Data — Cooling

50JC UNIT	50JC*V04	50JC*W04	50JC*V05	50JC*W05	50JC*V06	50JC*W06
NOMINAL TONS	3		4		5	
BASE UNIT OPERATING WT (lb)[a]	542		565		567	
REFRIGERATION SYSTEM						
No. Circuits/No. Compressors/Type	1 / 1 / Variable Speed Scroll		1 / 1 / Variable Speed Scroll		1 / 1 / Variable Speed Scroll	
Puron® (R-410A) charge A/B (lb-oz)	12-0	—	11-5	—	12-0	—
Humidi-MiZer® Puron (R-410A) charge A/B (lb-oz)	—	15-0	—	16-5	—	18-0
Metering device	TXV	TXV	TXV	TXV	TXV	TXV
Humidi-MiZer metering device	—	TXV	—	TXV	—	TXV
High-Pressure Trip/Reset (psig)	630/505	630/505	630/505	630/505	630/505	630/505
Low-Pressure Trip/Reset (psig)	54/117	27/44	54/117	27/44	54/117	27/44
EVAPORATOR COIL						
Material (Tube/Fin)	Cu/Al	Cu/Al	Cu/Al	Cu/Al	Cu/Al	Cu/Al
Coil Type	3/8 in. RTPF	3/8 in. RTPF	3/8 in. RTPF	3/8 in. RTPF	3/8 in. RTPF	3/8 in. RTPF
Rows/FPI	3/15	3/15	4/15	4/15	4/15	4/15
Total Face Area (ft^2)	7.3	7.3	7.3	7.3	7.3	7.3
Condensate Drain Connection Size	3/4 in.	3/4 in.	3/4 in.	3/4 in.	3/4 in.	3/4 in.
CONDENSER COIL						
Material	Cu/Al	Cu/Al	Cu/Al	Cu/Al	Cu/Al	Cu/Al
Coil Type	5/16 in. RTPF	5/16in. RTPF	5/16 in. RTPF	5/16 in. RTPF	5/16 in. RTPF	5/16in. RTPF
Rows/FPI	2/18	2/18	2/18	2/18	2/18	2/18
Total Face Area (ft^2)	21.3	21.3	21.3	21.3	21.3	21.3
HUMIDI-MIZER COIL						
Material	—	Cu/Al	—	Cu/Al	—	Cu/Al
Coil Type	—	3/8 in. RTPF	—	3/8 in. RTPF	—	3/8 in. RTPF
Rows/FPI	—	1/17	—	2/17	—	2/17
Total Face Area (ft^2)	—	5.5	—	5.5	—	5.5
EVAPORATOR FAN AND MOTOR						
Standard Static 3 Phase						
Motor Qty / Drive Type	1 / Direct	1 / Direct	1 / Direct	1 / Direct	1 / Direct	1 / Direct
Maximum Cont Bhp	0.44	0.44	0.72	0.72	1.06	1.06
Rpm Range	189-1890	189-1890	190-1900	190-1900	215-2150	215-2150
Fan Qty / Type	1 / Vane Axial	1 / Vane Axial	1 / Vane Axial	1 / Vane Axial	1 / Vane Axial	1 / Vane Axial
Fan Diameter (in.)	16.6	16.6	16.6	16.6	16.6	16.6
Medium Static 3 Phase						
Motor Qty / Drive Type	1 / Direct	1 / Direct	1 / Direct	1 / Direct	1 / Direct	1 / Direct
Maximum Cont Bhp	0.71	0.71	1.06	1.06	1.44	1.44
Rpm Range	219-2190	219-2190	217-2170	217-2170	239-2390	239-2390
Fan Qty / Type	1 / Vane Axial	1 / Vane Axial	1 / Vane Axial	1 / Vane Axial	1 / Vane Axial	1 / Vane Axial
Fan Diameter (in.)	16.6	16.6	16.6	16.6	16.6	16.6
High Static 3 Phase						
Motor Qty / Drive Type	1 / Direct	1 / Direct	1 / Direct	1 / Direct	1 / Direct	1 / Direct
Maximum Cont Bhp	1.07	1.07	1.96	1.96	2.43	2.43
Rpm Range	249-2490	249-2490	266-2660	266-2660	284-2836	284-2836
Fan Qty / Type	1 / Vane Axial	1 / Vane Axial	1 / Vane Axial	1 / Vane Axial	1 / Vane Axial	1 / Vane Axial
Fan Diameter (in.)	16.6	16.6	16.6	16.6	16.6	16.6
CONDENSER FAN AND MOTOR						
Qty / Motor Drive Type	1 / Direct	1 / Direct	1 / Direct	1 / Direct	1 / Direct	1 / Direct
Motor HP/Rpm	1/3 / 160-1100	1/3 / 160-1100	1/3 / 160-1100	1/3/ 160-1100	1/3 / 160-1100	1/3 / 160-1100
Fan Diameter (in.)	23	23	23	23	23	23
FILTERS						
RA Filter Qty / Size (in.)	4 / 16x16x2	4 / 16x16x2	4 / 16x16x2	4 / 16x16x2	4 / 16x16x2	4 / 16x16x2
OA Inlet Screen Qty / Size (in.)	1 / 20x24x1	1 / 20x24x1	1 / 20x24x1	1 / 20x24x1	1 / 20x24x1	1 / 20x24x1

NOTE(S):

a. Base unit operating weight does not include weight of options.

LEGEND

Bhp — Brake Horsepower
FPI — Fins Per Inch
OA — Outdoor Air
RA — Return Air

APPENDIX C — FAN PERFORMANCE

GENERAL FAN PERFORMANCE NOTES

1. Interpolation is permissible. Do not extrapolate.
2. External static pressure is the static pressure difference between the return duct and the supply duct plus the static pressure caused by any FIOPs or accessories.
3. Tabular data accounts for pressure loss due to clean filters, unit casing, wet coils, and highest gas heat exchanger (when gas heat unit).
4. Factory options and accessories may effect static pressure losses. Gas heat unit fan tables assume highest gas heat models; for fan selections with low or medium heat models, the user must deduct low and medium heat static pressures. Selection software is available, through your salesperson, to help you select the best motor/drive combination for your application.
5. The fan performance tables offer motor/drive recommendations. In cases when 2 motor/drive combinations would work, Carrier recommends the lower horsepower option.
6. For information on the electrical properties of Carrier motors, please see the Electrical Data section of the product data book for this model and size.
7. For more information on the performance limits of Carrier motors, see the Application Data section of the product data book for this model and size.
8. The EPACT (Energy Policy Act of 1992) regulates energy requirements for specific types of indoor fan motors. Motors regulated by EPACT include any general purpose, T-frame (3-digit, 143 and larger), single-speed, foot mounted, polyphase, squirrel cage induction motors of NEMA (National Electrical Manufacturers Association) design A and B, manufactured for use in the United States. Ranging from 1 to 200 Hp, these continuous-duty motors operate on 230 and 460 volt, 60 Hz power. If a motor does not fit into these specifications, the motor does not have to be replaced by an EPACT compliant energy-efficient motor. Variable-speed motors are exempt from EPACT compliance requirements.

50JC**04 Three Phase — 3 Ton Vertical Supply (rpm - bhp)

CFM	AVAILABLE EXTERNAL STATIC PRESSURE (in. wg)									
	0.2		0.4		0.6		0.8		1.0	
	rpm	bhp	rpm	bhp	rpm	bhp	rpm	bhp	rpm	bhp
900	1021	0.07	1281	0.15	1496	0.23	1673	0.33	1825	0.42
975	1063	0.08	1309	0.16	1523	0.25	1703	0.34	1857	0.45
1050	1108	0.09	1339	0.17	1550	0.26	1731	0.36	1888	0.47
1125	1156	0.11	1371	0.18	1577	0.27	1759	0.38	1917	0.49
1200	1205	0.12	1407	0.19	1605	0.29	1785	0.40	1945	0.51
1275	1257	0.14	1446	0.21	1634	0.30	1812	0.41	1972	0.53
1350	1309	0.16	1487	0.23	1666	0.32	1839	0.43	1999	0.56
1425	1363	0.18	1531	0.25	1701	0.34	1868	0.45	2026	0.58
1500	1418	0.20	1576	0.27	1738	0.37	1898	0.48	2053	0.60

CFM	AVAILABLE EXTERNAL STATIC PRESSURE (in. wg)									
	1.2		1.4		1.6		1.8		2.0	
	rpm	bhp	rpm	bhp	rpm	bhp	rpm	bhp	rpm	bhp
900	1959	0.52	2082	0.63	2195	0.74	2301	0.85	2401	0.96
975	1994	0.55	2118	0.66	2232	0.77	2338	0.89	2439	1.01
1050	2027	0.58	2152	0.69	2268	0.81	2375	0.93	2476	1.06
1125	2058	0.61	2185	0.73	2302	0.85	2410	0.97	—	—
1200	2088	0.63	2217	0.76	2335	0.89	2445	1.02	—	—
1275	2116	0.66	2247	0.79	2367	0.92	2478	1.06	—	—
1350	2144	0.69	2276	0.82	2397	0.96	—	—	—	—
1425	2171	0.71	2304	0.85	2426	0.99	—	—	—	—
1500	2197	0.74	2331	0.88	2454	1.03	—	—	—	—

Standard Static 1021-1890 rpm, 0.44 Max bhp

Medium Static 1021-2190 rpm, 0.71 Max bhp

High Static 1021-2490 rpm, 1.07 Max bhp

50JC**04 Three Phase — Standard Static — 3 Ton Vertical Supply (rpm - vdc)

CFM	AVAILABLE EXTERNAL STATIC PRESSURE (in. wg)									
	0.2		0.4		0.6		0.8		1.0	
	rpm	vdc	rpm	vdc	rpm	vdc	rpm	vdc	rpm	vdc
900	1021	5.4	1281	6.8	1496	7.9	1673	8.9	1825	9.7
975	1063	5.6	1309	6.9	1523	8.1	1703	9.0	1857	9.8
1050	1108	5.9	1339	7.1	1550	8.2	1731	9.2	1888	10.0
1125	1156	6.1	1371	7.3	1577	8.3	1759	9.3	—	—
1200	1205	6.4	1407	7.4	1605	8.5	1785	9.4	—	—
1275	1257	6.7	1446	7.7	1634	8.6	1812	9.6	—	—
1350	1309	6.9	1487	7.9	1666	8.8	1839	9.7	—	—
1425	1363	7.2	1531	8.1	1701	9.0	1868	9.9	—	—
1500	1418	7.5	1576	8.3	1738	9.2	—	—	—	—

CFM	AVAILABLE EXTERNAL STATIC PRESSURE (in. wg)									
	1.2		1.4		1.6		1.8		2.0	
	rpm	vdc	rpm	vdc	rpm	vdc	rpm	vdc	rpm	vdc
900	—	—	—	—	—	—	—	—	—	—
975	—	—	—	—	—	—	—	—	—	—
1050	—	—	—	—	—	—	—	—	—	—
1125	—	—	—	—	—	—	—	—	—	—
1200	—	—	—	—	—	—	—	—	—	—
1275	—	—	—	—	—	—	—	—	—	—
1350	—	—	—	—	—	—	—	—	—	—
1425	—	—	—	—	—	—	—	—	—	—
1500	—	—	—	—	—	—	—	—	—	—

Standard Static 1021-1890 rpm

50JC**04 Three Phase — Medium Static — 3 Ton Vertical Supply (rpm - vdc)

CFM	AVAILABLE EXTERNAL STATIC PRESSURE (in. wg)									
	0.2		0.4		0.6		0.8		1.0	
	rpm	vdc	rpm	vdc	rpm	vdc	rpm	vdc	rpm	vdc
900	1021	4.7	1281	5.8	1496	6.8	1673	7.6	1825	8.3
975	1063	4.9	1309	6.0	1523	7.0	1703	7.8	1857	8.5
1050	1108	5.1	1339	6.1	1550	7.1	1731	7.9	1888	8.6
1125	1156	5.3	1371	6.3	1577	7.2	1759	8.0	1917	8.8
1200	1205	5.5	1407	6.4	1605	7.3	1785	8.2	1945	8.9
1275	1257	5.7	1446	6.6	1634	7.5	1812	8.3	1972	9.0
1350	1309	6.0	1487	6.8	1666	7.6	1839	8.4	1999	9.1
1425	1363	6.2	1531	7.0	1701	7.8	1868	8.5	2026	9.3
1500	1418	6.5	1576	7.2	1738	7.9	1898	8.7	2053	9.4

CFM	AVAILABLE EXTERNAL STATIC PRESSURE (in. wg)									
	1.2		1.4		1.6		1.8		2.0	
	rpm	vdc	rpm	vdc	rpm	vdc	rpm	vdc	rpm	vdc
900	1959	8.9	2082	9.5	—	—	—	—	—	—
975	1994	9.1	2118	9.7	—	—	—	—	—	—
1050	2027	9.3	2152	9.8	—	—	—	—	—	—
1125	2058	9.4	2185	10.0	—	—	—	—	—	—
1200	2088	9.5	—	—	—	—	—	—	—	—
1275	2116	9.7	—	—	—	—	—	—	—	—
1350	2144	9.8	—	—	—	—	—	—	—	—
1425	2171	9.9	—	—	—	—	—	—	—	—
1500	—	—	—	—	—	—	—	—	—	—

Medium Static 1021-2190 rpm

50JC**04 Three Phase — High Static — 3 Ton Vertical Supply (rpm - vdc)

CFM	AVAILABLE EXTERNAL STATIC PRESSURE (in. wg)									
	0.2		0.4		0.6		0.8		1.0	
	rpm	vdc	rpm	vdc	rpm	vdc	rpm	vdc	rpm	vdc
900	1021	4.1	1281	5.1	1496	6.0	1673	6.7	1825	7.3
975	1063	4.3	1309	5.3	1523	6.1	1703	6.8	1857	7.5
1050	1108	4.4	1339	5.4	1550	6.2	1731	7.0	1888	7.6
1125	1156	4.6	1371	5.5	1577	6.3	1759	7.1	1917	7.7
1200	1205	4.8	1407	5.7	1605	6.4	1785	7.2	1945	7.8
1275	1257	5.0	1446	5.8	1634	6.6	1812	7.3	1972	7.9
1350	1309	5.3	1487	6.0	1666	6.7	1839	7.4	1999	8.0
1425	1363	5.5	1531	6.1	1701	6.8	1868	7.5	2026	8.1
1500	1418	5.7	1576	6.3	1738	7.0	1898	7.6	2053	8.2

CFM	AVAILABLE EXTERNAL STATIC PRESSURE (in. wg)									
	1.2		1.4		1.6		1.8		2.0	
	rpm	vdc	rpm	vdc	rpm	vdc	rpm	vdc	rpm	vdc
900	1959	7.9	2082	8.4	2195	8.8	2301	9.2	2401	9.6
975	1994	8.0	2118	8.5	2232	9.0	2338	9.4	2439	9.8
1050	2027	8.1	2152	8.6	2268	9.1	2375	9.5	2476	9.9
1125	2058	8.3	2185	8.8	2302	9.2	2410	9.7	—	—
1200	2088	8.4	2217	8.9	2335	9.4	2445	9.8	—	—
1275	2116	8.5	2247	9.0	2367	9.5	2478	10.0	—	—
1350	2144	8.6	2276	9.1	2397	9.6	—	—	—	—
1425	2171	8.7	2304	9.3	2426	9.7	—	—	—	—
1500	2197	8.8	2331	9.4	2454	9.9	—	—	—	—

High Static 1021-2490 rpm

50JC**05 Three Phase — 4 Ton Vertical Supply (rpm - bhp)

CFM	AVAILABLE EXTERNAL STATIC PRESSURE (in. wg)									
	0.2		0.4		0.6		0.8		1.0	
	rpm	bhp	rpm	bhp	rpm	bhp	rpm	bhp	rpm	bhp
1200	1057	0.13	1259	0.22	1436	0.32	1593	0.44	1736	0.57
1300	1112	0.15	1302	0.24	1473	0.34	1626	0.46	1768	0.59
1400	1168	0.17	1347	0.26	1513	0.37	1663	0.49	1800	0.62
1500	1228	0.20	1394	0.29	1555	0.40	1701	0.53	1835	0.66
1600	1290	0.23	1444	0.32	1598	0.43	1740	0.56	1872	0.70
1700	1353	0.26	1496	0.35	1643	0.47	1781	0.60	1910	0.74
1800	1417	0.30	1550	0.39	1690	0.51	1824	0.64	1950	0.78
1900	1482	0.34	1606	0.44	1738	0.55	1868	0.69	1991	0.83
2000	1549	0.39	1664	0.48	1789	0.60	1914	0.74	2034	0.88

CFM	AVAILABLE EXTERNAL STATIC PRESSURE (in. wg)									
	1.2		1.4		1.6		1.8		2.0	
	rpm	bhp	rpm	bhp	rpm	bhp	rpm	bhp	rpm	bhp
1200	1869	0.71	1992	0.85	2107	1.01	2216	1.18	2319	1.35
1300	1898	0.74	2019	0.89	2134	1.05	2242	1.21	2345	1.39
1400	1928	0.77	2048	0.92	2162	1.08	2269	1.25	2371	1.43
1500	1961	0.80	2079	0.96	2191	1.12	2297	1.29	2399	1.47
1600	1995	0.84	2112	1.00	2221	1.16	2326	1.34	2427	1.52
1700	2031	0.89	2145	1.05	2254	1.21	2357	1.39	2456	1.57
1800	2068	0.93	2181	1.10	2287	1.26	2390	1.44	2487	1.62
1900	2108	0.99	2217	1.15	2322	1.32	2423	1.50	2520	1.68
2000	2148	1.04	2256	1.21	2359	1.38	2458	1.56	2553	1.75

Standard Static 1057-1900 rpm, 0.72 Max bhp

Medium Static 1057-2170 rpm, 1.06 Max bhp

High Static 1057-2660 rpm, 1.96 Max bhp

50JC**05 Three Phase — Standard Static — 4 Ton Vertical Supply (rpm - vdc)

CFM	AVAILABLE EXTERNAL STATIC PRESSURE (in. wg)									
	0.2		0.4		0.6		0.8		1.0	
	rpm	vdc	rpm	vdc	rpm	vdc	rpm	vdc	rpm	vdc
1200	1057	5.6	1259	6.6	1436	7.6	1593	8.4	1736	9.1
1300	1112	5.9	1302	6.9	1473	7.8	1626	8.6	1768	9.3
1400	1168	6.1	1347	7.1	1513	8.0	1663	8.8	1800	9.5
1500	1228	6.5	1394	7.3	1555	8.2	1701	9.0	1835	9.7
1600	1290	6.8	1444	7.6	1598	8.4	1740	9.2	1872	9.9
1700	1353	7.1	1496	7.9	1643	8.6	1781	9.4	—	—
1800	1417	7.5	1550	8.2	1690	8.9	1824	9.6	—	—
1900	1482	7.8	1606	8.5	1738	9.1	1868	9.8	—	—
2000	1549	8.2	1664	8.8	1789	9.4	—	—	—	—

CFM	AVAILABLE EXTERNAL STATIC PRESSURE (in. wg)									
	1.2		1.4		1.6		1.8		2.0	
	rpm	vdc	rpm	vdc	rpm	vdc	rpm	vdc	rpm	vdc
1200	1869	9.8	—	—	—	—	—	—	—	—
1300	1898	10.0	—	—	—	—	—	—	—	—
1400	—	—	—	—	—	—	—	—	—	—
1500	—	—	—	—	—	—	—	—	—	—
1600	—	—	—	—	—	—	—	—	—	—
1700	—	—	—	—	—	—	—	—	—	—
1800	—	—	—	—	—	—	—	—	—	—
1900	—	—	—	—	—	—	—	—	—	—
2000	—	—	—	—	—	—	—	—	—	—

Standard Static 1057-1900 rpm

50JC**05 Three Phase — Medium Static — 4 Ton Vertical Supply (rpm - vdc)

CFM	AVAILABLE EXTERNAL STATIC PRESSURE (in. wg)									
	0.2		0.4		0.6		0.8		1.0	
	rpm	vdc	rpm	vdc	rpm	vdc	rpm	vdc	rpm	vdc
1200	1057	4.9	1259	5.8	1436	6.6	1593	7.3	1736	8.0
1300	1112	5.1	1302	6.0	1473	6.8	1626	7.5	1768	8.1
1400	1168	5.4	1347	6.2	1513	7.0	1663	7.7	1800	8.3
1500	1228	5.7	1394	6.4	1555	7.2	1701	7.8	1835	8.5
1600	1290	5.9	1444	6.7	1598	7.4	1740	8.0	1872	8.6
1700	1353	6.2	1496	6.9	1643	7.6	1781	8.2	1910	8.8
1800	1417	6.5	1550	7.1	1690	7.8	1824	8.4	1950	9.0
1900	1482	6.8	1606	7.4	1738	8.0	1868	8.6	1991	9.2
2000	1549	7.1	1664	7.7	1789	8.2	1914	8.8	2034	9.4

CFM	AVAILABLE EXTERNAL STATIC PRESSURE (in. wg)									
	1.2		1.4		1.6		1.8		2.0	
	rpm	vdc	rpm	vdc	rpm	vdc	rpm	vdc	rpm	vdc
1200	1869	8.6	1992	9.2	2107	9.7	—	—	—	—
1300	1898	8.7	2019	9.3	2134	9.8	—	—	—	—
1400	1928	8.9	2048	9.4	2162	10.0	—	—	—	—
1500	1961	9.0	2079	9.6	—	—	—	—	—	—
1600	1995	9.2	2112	9.7	—	—	—	—	—	—
1700	2031	9.4	2145	9.9	—	—	—	—	—	—
1800	2068	9.5	—	—	—	—	—	—	—	—
1900	2108	9.7	—	—	—	—	—	—	—	—
2000	2148	9.9	—	—	—	—	—	—	—	—

Medium Static 1057-2170 rpm

50JC**05 Three Phase — High Static — 4 Ton Vertical Supply (rpm - vdc)

CFM	AVAILABLE EXTERNAL STATIC PRESSURE (in. wg)									
	0.2		0.4		0.6		0.8		1.0	
	rpm	vdc	rpm	vdc	rpm	vdc	rpm	vdc	rpm	vdc
1200	1057	4.0	1259	4.7	1436	5.4	1593	6.0	1736	6.5
1300	1112	4.2	1302	4.9	1473	5.5	1626	6.1	1768	6.6
1400	1168	4.4	1347	5.1	1513	5.7	1663	6.3	1800	6.8
1500	1228	4.6	1394	5.2	1555	5.8	1701	6.4	1835	6.9
1600	1290	4.8	1444	5.4	1598	6.0	1740	6.5	1872	7.0
1700	1353	5.1	1496	5.6	1643	6.2	1781	6.7	1910	7.2
1800	1417	5.3	1550	5.8	1690	6.4	1824	6.9	1950	7.3
1900	1482	5.6	1606	6.0	1738	6.5	1868	7.0	1991	7.5
2000	1549	5.8	1664	6.3	1789	6.7	1914	7.2	2034	7.6

CFM	AVAILABLE EXTERNAL STATIC PRESSURE (in. wg)									
	1.2		1.4		1.6		1.8		2.0	
	rpm	vdc	rpm	vdc	rpm	vdc	rpm	vdc	rpm	vdc
1200	1869	7.0	1992	7.5	2107	7.9	2216	8.3	2319	8.7
1300	1898	7.1	2019	7.6	2134	8.0	2242	8.4	2345	8.8
1400	1928	7.2	2048	7.7	2162	8.1	2269	8.5	2371	8.9
1500	1961	7.4	2079	7.8	2191	8.2	2297	8.6	2399	9.0
1600	1995	7.5	2112	7.9	2221	8.3	2326	8.7	2427	9.1
1700	2031	7.6	2145	8.1	2254	8.5	2357	8.9	2456	9.2
1800	2068	7.8	2181	8.2	2287	8.6	2390	9.0	2487	9.3
1900	2108	7.9	2217	8.3	2322	8.7	2423	9.1	2520	9.5
2000	2148	8.1	2256	8.5	2359	8.9	2458	9.2	2553	9.6

High Static 1057-2660 rpm

50JC**06 Three Phase — 5 Ton Vertical Supply (rpm - bhp)

CFM	AVAILABLE EXTERNAL STATIC PRESSURE (in. wg)									
	0.2		0.4		0.6		0.8		1.0	
	rpm	bhp	rpm	bhp	rpm	bhp	rpm	bhp	rpm	bhp
1500	1228	0.20	1394	0.29	1555	0.40	1701	0.53	1836	0.66
1625	1305	0.24	1457	0.33	1609	0.44	1751	0.57	1882	0.71
1750	1384	0.28	1523	0.37	1666	0.49	1803	0.62	1930	0.76
1875	1466	0.33	1592	0.43	1726	0.54	1857	0.67	1981	0.82
2000	1549	0.39	1664	0.48	1789	0.60	1914	0.74	2034	0.88
2125	1633	0.46	1738	0.55	1855	0.67	1974	0.81	2089	0.95
2250	1718	0.53	1815	0.62	1924	0.74	2036	0.88	2147	1.03
2375	1803	0.61	1894	0.71	1995	0.83	2100	0.97	2206	1.12
2500	1890	0.70	1974	0.80	2068	0.92	2167	1.06	2268	1.21

CFM	AVAILABLE EXTERNAL STATIC PRESSURE (in. wg)									
	1.2		1.4		1.6		1.8		2.0	
	rpm	bhp	rpm	bhp	rpm	bhp	rpm	bhp	rpm	bhp
1500	1961	0.80	2079	0.96	2191	1.12	2297	1.29	2399	1.47
1625	2004	0.85	2120	1.01	2230	1.18	2334	1.35	2434	1.53
1750	2050	0.91	2163	1.07	2270	1.24	2373	1.41	2472	1.60
1875	2098	0.97	2208	1.13	2314	1.31	2415	1.48	2511	1.67
2000	2148	1.04	2256	1.21	2359	1.38	2458	1.56	2553	1.75
2125	2200	1.11	2306	1.28	2407	1.46	2504	1.64	2597	1.83
2250	2254	1.20	2357	1.37	2456	1.55	2551	1.73	2643	1.93
2375	2310	1.28	2411	1.46	2507	1.64	2601	1.83	2691	2.03
2500	2368	1.38	2465	1.56	2560	1.75	2651	1.94	2740	2.14

Standard Static 1228-2150 rpm, 1.06 Max bhp

Medium Static 1228-2390 rpm, 1.44 Max bhp

High Static 1228-2836 rpm, 2.43 Max bhp

50JC**06 Three Phase — Standard Static — 5 Ton Vertical Supply (rpm - vdc)

CFM	AVAILABLE EXTERNAL STATIC PRESSURE (in. wg)									
	0.2		0.4		0.6		0.8		1.0	
	rpm	vdc	rpm	vdc	rpm	vdc	rpm	vdc	rpm	vdc
1500	1228	5.7	1394	6.5	1555	7.2	1701	7.9	1836	8.5
1625	1305	6.1	1457	6.8	1609	7.5	1751	8.1	1882	8.8
1750	1384	6.4	1523	7.1	1666	7.7	1803	8.4	1930	9.0
1875	1466	6.8	1592	7.4	1726	8.0	1857	8.6	1981	9.2
2000	1549	7.2	1664	7.7	1789	8.3	1914	8.9	2034	9.5
2125	1633	7.6	1738	8.1	1855	8.6	1974	9.2	2089	9.7
2250	1718	8.0	1815	8.4	1924	8.9	2036	9.5	2147	10.0
2375	1803	8.4	1894	8.8	1995	9.3	2100	9.8	—	—
2500	1890	8.8	1974	9.2	2068	9.6	—	—	—	—

CFM	AVAILABLE EXTERNAL STATIC PRESSURE (in. wg)									
	1.2		1.4		1.6		1.8		2.0	
	rpm	vdc	rpm	vdc	rpm	vdc	rpm	vdc	rpm	vdc
1500	1961	9.1	2079	9.7	—	—	—	—	—	—
1625	2004	9.3	2120	9.9	—	—	—	—	—	—
1750	2050	9.5	—	—	—	—	—	—	—	—
1875	2098	9.8	—	—	—	—	—	—	—	—
2000	2148	10.0	—	—	—	—	—	—	—	—
2125	—	—	—	—	—	—	—	—	—	—
2250	—	—	—	—	—	—	—	—	—	—
2375	—	—	—	—	—	—	—	—	—	—
2500	—	—	—	—	—	—	—	—	—	—

Standard Static 1228-2150 rpm

50JC**06 Three Phase — Medium Static — 5 Ton Vertical Supply (rpm - vdc)

CFM	AVAILABLE EXTERNAL STATIC PRESSURE (in. wg)									
	0.2		0.4		0.6		0.8		1.0	
	rpm	vdc	rpm	vdc	rpm	vdc	rpm	vdc	rpm	vdc
1500	1228	5.1	1394	5.8	1555	6.5	1701	7.1	1836	7.7
1625	1305	5.5	1457	6.1	1609	6.7	1751	7.3	1882	7.9
1750	1384	5.8	1523	6.4	1666	7.0	1803	7.5	1930	8.1
1875	1466	6.1	1592	6.7	1726	7.2	1857	7.8	1981	8.3
2000	1549	6.5	1664	7.0	1789	7.5	1914	8.0	2034	8.5
2125	1633	6.8	1738	7.3	1855	7.8	1974	8.3	2089	8.7
2250	1718	7.2	1815	7.6	1924	8.1	2036	8.5	2147	9.0
2375	1803	7.5	1894	7.9	1995	8.3	2100	8.8	2206	9.2
2500	1890	7.9	1974	8.3	2068	8.7	2167	9.1	2268	9.5

CFM	AVAILABLE EXTERNAL STATIC PRESSURE (in. wg)									
	1.2		1.4		1.6		1.8		2.0	
	rpm	vdc	rpm	vdc	rpm	vdc	rpm	vdc	rpm	vdc
1500	1961	8.2	2079	8.7	2191	9.2	2297	9.6	—	—
1625	2004	8.4	2120	8.9	2230	9.3	2334	9.8	—	—
1750	2050	8.6	2163	9.1	2270	9.5	2373	9.9	—	—
1875	2098	8.8	2208	9.2	2314	9.7	—	—	—	—
2000	2148	9.0	2256	9.4	2359	9.9	—	—	—	—
2125	2200	9.2	2306	9.6	—	—	—	—	—	—
2250	2254	9.4	2357	9.9	—	—	—	—	—	—
2375	2310	9.7	—	—	—	—	—	—	—	—
2500	2368	9.9	—	—	—	—	—	—	—	—

Medium Static 1228-2390 rpm

50JC**06 Three Phase — High Static — 5 Ton Vertical Supply (rpm - vdc)

CFM	AVAILABLE EXTERNAL STATIC PRESSURE (in. wg)									
	0.2		0.4		0.6		0.8		1.0	
	rpm	vdc	rpm	vdc	rpm	vdc	rpm	vdc	rpm	vdc
1500	1228	4.3	1394	4.9	1555	5.5	1701	6.0	1836	6.5
1625	1305	4.6	1457	5.1	1609	5.7	1751	6.2	1882	6.6
1750	1384	4.9	1523	5.4	1666	5.9	1803	6.4	1930	6.8
1875	1466	5.2	1592	5.6	1726	6.1	1857	6.5	1981	7.0
2000	1549	5.5	1664	5.9	1789	6.3	1914	6.7	2034	7.2
2125	1633	5.8	1738	6.1	1855	6.5	1974	7.0	2089	7.4
2250	1718	6.1	1815	6.4	1924	6.8	2036	7.2	2147	7.6
2375	1803	6.4	1894	6.7	1995	7.0	2100	7.4	2206	7.8
2500	1890	6.7	1974	7.0	2068	7.3	2167	7.6	2268	8.0

CFM	AVAILABLE EXTERNAL STATIC PRESSURE (in. wg)									
	1.2		1.4		1.6		1.8		2.0	
	rpm	vdc	rpm	vdc	rpm	vdc	rpm	vdc	rpm	vdc
1500	1961	6.9	2079	7.3	2191	7.7	2297	8.1	2399	8.5
1625	2004	7.1	2120	7.5	2230	7.9	2334	8.2	2434	8.6
1750	2050	7.2	2163	7.6	2270	8.0	2373	8.4	2472	8.7
1875	2098	7.4	2208	7.8	2314	8.2	2415	8.5	2511	8.9
2000	2148	7.6	2256	8.0	2359	8.3	2458	8.7	2553	9.0
2125	2200	7.8	2306	8.1	2407	8.5	2504	8.8	2597	9.2
2250	2254	7.9	2357	8.3	2456	8.7	2551	9.0	2643	9.3
2375	2310	8.1	2411	8.5	2507	8.8	2601	9.2	2691	9.5
2500	2368	8.3	2465	8.7	2560	9.0	2651	9.3	2740	9.7

High Static 1228-2836 rpm

50JC**04 Three Phase — 3 Ton Horizontal Supply (rpm - bhp)

CFM	AVAILABLE EXTERNAL STATIC PRESSURE (in. wg)									
	0.2		0.4		0.6		0.8		1.0	
	rpm	bhp	rpm	bhp	rpm	bhp	rpm	bhp	rpm	bhp
900	998	0.07	1258	0.14	1472	0.22	1652	0.31	1808	0.41
975	1036	0.08	1285	0.15	1498	0.23	1678	0.33	1836	0.43
1050	1077	0.09	1314	0.16	1523	0.25	1704	0.34	1863	0.45
1125	1121	0.10	1345	0.17	1549	0.26	1729	0.36	1888	0.47
1200	1167	0.11	1378	0.18	1577	0.27	1755	0.38	1914	0.49
1275	1216	0.13	1413	0.20	1604	0.29	1781	0.39	1939	0.51
1350	1266	0.14	1450	0.21	1634	0.30	1807	0.41	1965	0.53
1425	1318	0.16	1490	0.23	1666	0.32	1834	0.43	1991	0.55
1500	1370	0.18	1532	0.25	1700	0.34	1863	0.45	2016	0.57

CFM	AVAILABLE EXTERNAL STATIC PRESSURE (in. wg)									
	1.2		1.4		1.6		1.8		2.0	
	rpm	bhp	rpm	bhp	rpm	bhp	rpm	bhp	rpm	bhp
900	1948	0.51	2074	0.62	2191	0.73	2300	0.85	2402	0.97
975	1977	0.54	2105	0.65	2223	0.76	2333	0.88	2436	1.01
1050	2005	0.56	2134	0.68	2253	0.80	2364	0.92	2468	1.05
1125	2032	0.58	2162	0.70	2282	0.83	2394	0.96	—	—
1200	2058	0.61	2189	0.73	2310	0.86	2423	0.99	—	—
1275	2083	0.63	2215	0.76	2337	0.89	2451	1.03	—	—
1350	2108	0.65	2241	0.78	2364	0.92	2478	1.06	—	—
1425	2134	0.68	2266	0.81	2389	0.95	—	—	—	—
1500	2159	0.70	2291	0.84	2415	0.98	—	—	—	—

Standard Static 998-1890 rpm, 0.44 Max bhp

Medium Static 998-2190 rpm, 0.71 Max bhp

High Static 998-2490 rpm, 1.07 Max bhp

50JC**04 Three Phase — Standard Static — 3 Ton Horizontal Supply (rpm - vdc)

CFM	AVAILABLE EXTERNAL STATIC PRESSURE (in. wg)									
	0.2		0.4		0.6		0.8		1.0	
	rpm	vdc	rpm	vdc	rpm	vdc	rpm	vdc	rpm	vdc
900	998	5.3	1258	6.7	1472	7.8	1652	8.7	1808	9.6
975	1036	5.5	1285	6.8	1498	7.9	1678	8.9	1836	9.7
1050	1077	5.7	1314	7.0	1523	8.1	1704	9.0	1863	9.9
1125	1121	5.9	1345	7.1	1549	8.2	1729	9.1	1888	10.0
1200	1167	6.2	1378	7.3	1577	8.3	1755	9.3	—	—
1275	1216	6.4	1413	7.5	1604	8.5	1781	9.4	—	—
1350	1266	6.7	1450	7.7	1634	8.6	1807	9.6	—	—
1425	1318	7.0	1490	7.9	1666	8.8	1834	9.7	—	—
1500	1370	7.2	1532	8.1	1700	9.0	1863	9.9	—	—

CFM	AVAILABLE EXTERNAL STATIC PRESSURE (in. wg)									
	1.2		1.4		1.6		1.8		2.0	
	rpm	vdc	rpm	vdc	rpm	vdc	rpm	vdc	rpm	vdc
900	—	—	—	—	—	—	—	—	—	—
975	—	—	—	—	—	—	—	—	—	—
1050	—	—	—	—	—	—	—	—	—	—
1125	—	—	—	—	—	—	—	—	—	—
1200	—	—	—	—	—	—	—	—	—	—
1275	—	—	—	—	—	—	—	—	—	—
1350	—	—	—	—	—	—	—	—	—	—
1425	—	—	—	—	—	—	—	—	—	—
1500	—	—	—	—	—	—	—	—	—	—

Standard Static 998-1890 rpm

50JC**04 Three Phase — Medium Static — 3 Ton Horizontal Supply (rpm - vdc)

CFM	AVAILABLE EXTERNAL STATIC PRESSURE (in. wg)									
	0.2		0.4		0.6		0.8		1.0	
	rpm	vdc	rpm	vdc	rpm	vdc	rpm	vdc	rpm	vdc
900	998	4.6	1258	5.7	1472	6.7	1652	7.5	1808	8.3
975	1036	4.7	1285	5.9	1498	6.8	1678	7.7	1836	8.4
1050	1077	4.9	1314	6.0	1523	7.0	1704	7.8	1863	8.5
1125	1121	5.1	1345	6.1	1549	7.1	1729	7.9	1888	8.6
1200	1167	5.3	1378	6.3	1577	7.2	1755	8.0	1914	8.7
1275	1216	5.6	1413	6.5	1604	7.3	1781	8.1	1939	8.9
1350	1266	5.8	1450	6.6	1634	7.5	1807	8.3	1965	9.0
1425	1318	6.0	1490	6.8	1666	7.6	1834	8.4	1991	9.1
1500	1370	6.3	1532	7.0	1700	7.8	1863	8.5	2016	9.2

CFM	AVAILABLE EXTERNAL STATIC PRESSURE (in. wg)									
	1.2		1.4		1.6		1.8		2.0	
	rpm	vdc	rpm	vdc	rpm	vdc	rpm	vdc	rpm	vdc
900	1948	8.9	2074	9.5	—	—	—	—	—	—
975	1977	9.0	2105	9.6	—	—	—	—	—	—
1050	2005	9.2	2134	9.7	—	—	—	—	—	—
1125	2032	9.3	2162	9.9	—	—	—	—	—	—
1200	2058	9.4	2189	10.0	—	—	—	—	—	—
1275	2083	9.5	—	—	—	—	—	—	—	—
1350	2108	9.6	—	—	—	—	—	—	—	—
1425	2134	9.7	—	—	—	—	—	—	—	—
1500	2159	9.9	—	—	—	—	—	—	—	—

Medium Static 998-2190 rpm

50JC**04 Three Phase — High Static — 3 Ton Horizontal Supply (rpm - vdc)

CFM	AVAILABLE EXTERNAL STATIC PRESSURE (in. wg)									
	0.2		0.4		0.6		0.8		1.0	
	rpm	vdc	rpm	vdc	rpm	vdc	rpm	vdc	rpm	vdc
900	998	4.0	1258	5.1	1472	5.9	1652	6.6	1808	7.3
975	1036	4.2	1285	5.2	1498	6.0	1678	6.7	1836	7.4
1050	1077	4.3	1314	5.3	1523	6.1	1704	6.8	1863	7.5
1125	1121	4.5	1345	5.4	1549	6.2	1729	6.9	1888	7.6
1200	1167	4.7	1378	5.5	1577	6.3	1755	7.0	1914	7.7
1275	1216	4.9	1413	5.7	1604	6.4	1781	7.2	1939	7.8
1350	1266	5.1	1450	5.8	1634	6.6	1807	7.3	1965	7.9
1425	1318	5.3	1490	6.0	1666	6.7	1834	7.4	1991	8.0
1500	1370	5.5	1532	6.2	1700	6.8	1863	7.5	2016	8.1

CFM	AVAILABLE EXTERNAL STATIC PRESSURE (in. wg)									
	1.2		1.4		1.6		1.8		2.0	
	rpm	vdc	rpm	vdc	rpm	vdc	rpm	vdc	rpm	vdc
900	1948	7.8	2074	8.3	2191	8.8	2300	9.2	2402	9.6
975	1977	7.9	2105	8.5	2223	8.9	2333	9.4	2436	9.8
1050	2005	8.1	2134	8.6	2253	9.0	2364	9.5	2468	9.9
1125	2032	8.2	2162	8.7	2282	9.2	2394	9.6	–	–
1200	2058	8.3	2189	8.8	2310	9.3	2423	9.7	–	–
1275	2083	8.4	2215	8.9	2337	9.4	2451	9.8	–	–
1350	2108	8.5	2241	9.0	2364	9.5	2478	10.0	–	–
1425	2134	8.6	2266	9.1	2389	9.6	–	–	–	–
1500	2159	8.7	2291	9.2	2415	9.7	–	–	–	–

High Static 998-2490 rpm

50JC**05 Three Phase — 4 Ton Horizontal Supply (rpm - bhp)

CFM	AVAILABLE EXTERNAL STATIC PRESSURE (in. wg)									
	0.2		0.4		0.6		0.8		1.0	
	rpm	bhp	rpm	bhp	rpm	bhp	rpm	bhp	rpm	bhp
1200	1031	0.11	1235	0.20	1423	0.30	1589	0.42	1738	0.55
1300	1083	0.13	1274	0.21	1454	0.32	1618	0.44	1765	0.57
1400	1138	0.15	1316	0.24	1487	0.34	1647	0.46	1793	0.60
1500	1197	0.18	1361	0.26	1524	0.36	1678	0.49	1822	0.62
1600	1256	0.20	1409	0.29	1563	0.39	1712	0.51	1852	0.65
1700	1317	0.23	1459	0.32	1605	0.42	1748	0.55	1884	0.68
1800	1379	0.27	1511	0.35	1650	0.46	1786	0.58	1918	0.72
1900	1441	0.30	1566	0.39	1696	0.50	1827	0.62	1954	0.76
2000	1505	0.35	1623	0.43	1745	0.54	1870	0.66	1992	0.80

CFM	AVAILABLE EXTERNAL STATIC PRESSURE (in. wg)									
	1.2		1.4		1.6		1.8		2.0	
	rpm	bhp	rpm	bhp	rpm	bhp	rpm	bhp	rpm	bhp
1200	1874	0.69	2000	0.84	2119	0.99	2232	1.16	2339	1.34
1300	1900	0.71	2025	0.86	2143	1.02	2254	1.19	2360	1.37
1400	1927	0.74	2051	0.89	2168	1.05	2278	1.22	2383	1.40
1500	1954	0.77	2078	0.92	2193	1.09	2303	1.26	2407	1.44
1600	1983	0.80	2105	0.96	2220	1.12	2329	1.30	2432	1.48
1700	2013	0.83	2133	0.99	2247	1.16	2356	1.34	2458	1.52
1800	2044	0.87	2163	1.03	2276	1.20	2383	1.38	2485	1.56
1900	2077	0.91	2194	1.07	2305	1.25	2411	1.42	2513	1.61
2000	2111	0.95	2226	1.12	2335	1.29	2440	1.47	2541	1.66

Standard Static 1031-1900 rpm, 0.72 Max bhp

Medium Static 1031-2170 rpm, 1.06 Max bhp

High Static 1031-2660 rpm, 1.96 Max bhp

50JC**05 Three Phase — Standard Static — 4 Ton Horizontal Supply (rpm - vdc)

CFM	AVAILABLE EXTERNAL STATIC PRESSURE (in. wg)									
	0.2		0.4		0.6		0.8		1.0	
	rpm	vdc	rpm	vdc	rpm	vdc	rpm	vdc	rpm	vdc
1200	1031	5.4	1235	6.5	1423	7.5	1589	8.4	1738	9.1
1300	1083	5.7	1274	6.7	1454	7.7	1618	8.5	1765	9.3
1400	1138	6.0	1316	6.9	1487	7.8	1647	8.7	1793	9.4
1500	1197	6.3	1361	7.2	1524	8.0	1678	8.8	1822	9.6
1600	1256	6.6	1409	7.4	1563	8.2	1712	9.0	1852	9.7
1700	1317	6.9	1459	7.7	1605	8.4	1748	9.2	1884	9.9
1800	1379	7.3	1511	8.0	1650	8.7	1786	9.4	–	–
1900	1441	7.6	1566	8.2	1696	8.9	1827	9.6	–	–
2000	1505	7.9	1623	8.5	1745	9.2	1870	9.8	–	–

CFM	AVAILABLE EXTERNAL STATIC PRESSURE (in. wg)									
	1.2		1.4		1.6		1.8		2.0	
	rpm	vdc	rpm	vdc	rpm	vdc	rpm	vdc	rpm	vdc
1200	1874	9.9	—	—	—	—	—	—	—	—
1300	1900	10.0	—	—	—	—	—	—	—	—
1400	—	—	—	—	—	—	—	—	—	—
1500	—	—	—	—	—	—	—	—	—	—
1600	—	—	—	—	—	—	—	—	—	—
1700	—	—	—	—	—	—	—	—	—	—
1800	—	—	—	—	—	—	—	—	—	—
1900	—	—	—	—	—	—	—	—	—	—
2000	—	—	—	—	—	—	—	—	—	—

Standard Static 1031-1900 rpm

50JC**05 Three Phase — Medium Static — 4 Ton Horizontal Supply (rpm - vdc)

CFM	AVAILABLE EXTERNAL STATIC PRESSURE (in. wg)									
	0.2		0.4		0.6		0.8		1.0	
	rpm	vdc	rpm	vdc	rpm	vdc	rpm	vdc	rpm	vdc
1200	1031	4.8	1235	5.7	1423	6.6	1589	7.3	1738	8.0
1300	1083	5.0	1274	5.9	1454	6.7	1618	7.5	1765	8.1
1400	1138	5.2	1316	6.1	1487	6.9	1647	7.6	1793	8.3
1500	1197	5.5	1361	6.3	1524	7.0	1678	7.7	1822	8.4
1600	1256	5.8	1409	6.5	1563	7.2	1712	7.9	1852	8.5
1700	1317	6.1	1459	6.7	1605	7.4	1748	8.1	1884	8.7
1800	1379	6.4	1511	7.0	1650	7.6	1786	8.2	1918	8.8
1900	1441	6.6	1566	7.2	1696	7.8	1827	8.4	1954	9.0
2000	1505	6.9	1623	7.5	1745	8.0	1870	8.6	1992	9.2

CFM	AVAILABLE EXTERNAL STATIC PRESSURE (in. wg)									
	1.2		1.4		1.6		1.8		2.0	
	rpm	vdc	rpm	vdc	rpm	vdc	rpm	vdc	rpm	vdc
1200	1874	8.6	2000	9.2	2119	9.8	—	—	—	—
1300	1900	8.8	2025	9.3	2143	9.9	—	—	—	—
1400	1927	8.9	2051	9.5	2168	10.0	—	—	—	—
1500	1954	9.0	2078	9.6	—	—	—	—	—	—
1600	1983	9.1	2105	9.7	—	—	—	—	—	—
1700	2013	9.3	2133	9.8	—	—	—	—	—	—
1800	2044	9.4	2163	10.0	—	—	—	—	—	—
1900	2077	9.6	—	—	—	—	—	—	—	—
2000	2111	9.7	—	—	—	—	—	—	—	—

Medium Static 1031-2170 rpm

50JC**05 Three Phase — High Static — 4 Ton Horizontal Supply (rpm - vdc)

CFM	AVAILABLE EXTERNAL STATIC PRESSURE (in. wg)									
	0.2		0.4		0.6		0.8		1.0	
	rpm	vdc	rpm	vdc	rpm	vdc	rpm	vdc	rpm	vdc
1200	1031	3.9	1235	4.6	1423	5.3	1589	6.0	1738	6.5
1300	1083	4.1	1274	4.8	1454	5.5	1618	6.1	1765	6.6
1400	1138	4.3	1316	4.9	1487	5.6	1647	6.2	1793	6.7
1500	1197	4.5	1361	5.1	1524	5.7	1678	6.3	1822	6.8
1600	1256	4.7	1409	5.3	1563	5.9	1712	6.4	1852	7.0
1700	1317	5.0	1459	5.5	1605	6.0	1748	6.6	1884	7.1
1800	1379	5.2	1511	5.7	1650	6.2	1786	6.7	1918	7.2
1900	1441	5.4	1566	5.9	1696	6.4	1827	6.9	1954	7.3
2000	1505	5.7	1623	6.1	1745	6.6	1870	7.0	1992	7.5

CFM	AVAILABLE EXTERNAL STATIC PRESSURE (in. wg)									
	1.2		1.4		1.6		1.8		2.0	
	rpm	vdc	rpm	vdc	rpm	vdc	rpm	vdc	rpm	vdc
1200	1874	7.0	2000	7.5	2119	8.0	2232	8.4	2339	8.8
1300	1900	7.1	2025	7.6	2143	8.1	2254	8.5	2360	8.9
1400	1927	7.2	2051	7.7	2168	8.2	2278	8.6	2383	9.0
1500	1954	7.3	2078	7.8	2193	8.2	2303	8.7	2407	9.0
1600	1983	7.5	2105	7.9	2220	8.3	2329	8.8	2432	9.1
1700	2013	7.6	2133	8.0	2247	8.4	2356	8.9	2458	9.2
1800	2044	7.7	2163	8.1	2276	8.6	2383	9.0	2485	9.3
1900	2077	7.8	2194	8.2	2305	8.7	2411	9.1	2513	9.4
2000	2111	7.9	2226	8.4	2335	8.8	2440	9.2	2541	9.6

High Static 1031-2660 rpm

50JC**06 Three Phase — 5 Ton Horizontal Supply (rpm - bhp)

CFM	AVAILABLE EXTERNAL STATIC PRESSURE (in. wg)									
	0.2		0.4		0.6		0.8		1.0	
	rpm	bhp	rpm	bhp	rpm	bhp	rpm	bhp	rpm	bhp
1500	1197	0.18	1361	0.26	1524	0.36	1679	0.49	1822	0.62
1625	1271	0.21	1421	0.29	1573	0.40	1721	0.52	1860	0.66
1750	1348	0.25	1486	0.34	1627	0.44	1767	0.56	1901	0.70
1875	1426	0.30	1552	0.38	1684	0.49	1816	0.61	1945	0.75
2000	1505	0.35	1623	0.43	1745	0.54	1869	0.66	1992	0.80
2125	1585	0.40	1695	0.49	1809	0.60	1926	0.72	2043	0.86
2250	1666	0.47	1769	0.56	1876	0.67	1986	0.79	2096	0.93
2375	1748	0.54	1844	0.63	1945	0.74	2048	0.87	2153	1.01
2500	1830	0.62	1921	0.71	2016	0.82	2114	0.95	2213	1.09

CFM	AVAILABLE EXTERNAL STATIC PRESSURE (in. wg)									
	1.2		1.4		1.6		1.8		2.0	
	rpm	bhp	rpm	bhp	rpm	bhp	rpm	bhp	rpm	bhp
1500	1954	0.77	2078	0.92	2194	1.09	2303	1.26	2407	1.44
1625	1990	0.81	2112	0.97	2227	1.13	2336	1.31	2439	1.49
1750	2028	0.85	2148	1.01	2262	1.18	2369	1.36	2472	1.54
1875	2068	0.90	2186	1.06	2298	1.23	2404	1.41	2506	1.60
2000	2111	0.95	2226	1.12	2335	1.29	2440	1.47	2541	1.66
2125	2157	1.02	2268	1.18	2375	1.36	2478	1.54	2577	1.73
2250	2206	1.08	2313	1.25	2417	1.43	2518	1.61	2615	1.81
2375	2257	1.16	2360	1.32	2461	1.50	2560	1.69	2655	1.89
2500	2312	1.24	2411	1.41	2508	1.59	2604	1.78	2697	1.97

Standard Static 1197-2150 rpm, 1.06 Max bhp

Medium Static 1197-2390 rpm, 1.44 Max bhp

High Static 1197-2836 rpm, 2.43 Max bhp

50JC**06 Three Phase — Standard Static — 5 Ton Horizontal Supply (rpm - vdc)

CFM	AVAILABLE EXTERNAL STATIC PRESSURE (in. wg)									
	0.2		0.4		0.6		0.8		1.0	
	rpm	vdc	rpm	vdc	rpm	vdc	rpm	vdc	rpm	vdc
1500	1197	5.6	1361	6.3	1524	7.1	1679	7.8	1822	8.5
1625	1271	5.9	1421	6.6	1573	7.3	1721	8.0	1860	8.7
1750	1348	6.3	1486	6.9	1627	7.6	1767	8.2	1901	8.8
1875	1426	6.6	1552	7.2	1684	7.8	1816	8.4	1945	9.0
2000	1505	7.0	1623	7.5	1745	8.1	1869	8.7	1992	9.3
2125	1585	7.4	1695	7.9	1809	8.4	1926	9.0	2043	9.5
2250	1666	7.7	1769	8.2	1876	8.7	1986	9.2	2096	9.7
2375	1748	8.1	1844	8.6	1945	9.0	2048	9.5	—	—
2500	1830	8.5	1921	8.9	2016	9.4	2114	9.8	—	—

CFM	AVAILABLE EXTERNAL STATIC PRESSURE (in. wg)									
	1.2		1.4		1.6		1.8		2.0	
	rpm	vdc	rpm	vdc	rpm	vdc	rpm	vdc	rpm	vdc
1500	1954	9.1	2078	9.7	—	—	—	—	—	—
1625	1990	9.3	2112	9.8	—	—	—	—	—	—
1750	2028	9.4	2148	10.0	—	—	—	—	—	—
1875	2068	9.6	—	—	—	—	—	—	—	—
2000	2111	9.8	—	—	—	—	—	—	—	—
2125	—	—	—	—	—	—	—	—	—	—
2250	—	—	—	—	—	—	—	—	—	—
2375	—	—	—	—	—	—	—	—	—	—
2500	—	—	—	—	—	—	—	—	—	—

Standard Static 1197-2150 rpm

50JC**06 Three Phase — Medium Static — 5 Ton Horizontal Supply (rpm - VDc)

CFM	AVAILABLE EXTERNAL STATIC PRESSURE (in. wg)									
	0.2		0.4		0.6		0.8		1.0	
	rpm	vdc	rpm	vdc	rpm	vdc	rpm	vdc	rpm	vdc
1500	1197	5.0	1361	5.7	1524	6.4	1679	7.0	1822	7.6
1625	1271	5.3	1421	5.9	1573	6.6	1721	7.2	1860	7.8
1750	1348	5.6	1486	6.2	1627	6.8	1767	7.4	1901	8.0
1875	1426	6.0	1552	6.5	1684	7.0	1816	7.6	1945	8.1
2000	1505	6.3	1623	6.8	1745	7.3	1869	7.8	1992	8.3
2125	1585	6.6	1695	7.1	1809	7.6	1926	8.1	2043	8.5
2250	1666	7.0	1769	7.4	1876	7.8	1986	8.3	2096	8.8
2375	1748	7.3	1844	7.7	1945	8.1	2048	8.6	2153	9.0
2500	1830	7.7	1921	8.0	2016	8.4	2114	8.8	2213	9.3

CFM	AVAILABLE EXTERNAL STATIC PRESSURE (in. wg)									
	1.2		1.4		1.6		1.8		2.0	
	rpm	vdc	rpm	vdc	rpm	vdc	rpm	vdc	rpm	vdc
1500	1954	8.2	2078	8.7	2194	9.2	2303	9.6	—	—
1625	1990	8.3	2112	8.8	2227	9.3	2336	9.8	—	—
1750	2028	8.5	2148	9.0	2262	9.5	2369	9.9	—	—
1875	2068	8.7	2186	9.1	2298	9.6	—	—	—	—
2000	2111	8.8	2226	9.3	2335	9.8	—	—	—	—
2125	2157	9.0	2268	9.5	2375	9.9	—	—	—	—
2250	2206	9.2	2313	9.7	—	—	—	—	—	—
2375	2257	9.4	2360	9.9	—	—	—	—	—	—
2500	2312	9.7	—	—	—	—	—	—	—	—

Medium Static 1197-2390 rpm

50JC**06 Three Phase — High Static — 5 Ton Horizontal Supply (rpm - vdc)

CFM	AVAILABLE EXTERNAL STATIC PRESSURE (in. wg)									
	0.2		0.4		0.6		0.8		1.0	
	rpm	vdc	rpm	vdc	rpm	vdc	rpm	vdc	rpm	vdc
1500	1197	4.2	1361	4.8	1524	5.4	1679	5.9	1822	6.4
1625	1271	4.5	1421	5.0	1573	5.5	1721	6.1	1860	6.6
1750	1348	4.8	1486	5.2	1627	5.7	1767	6.2	1901	6.7
1875	1426	5.0	1552	5.5	1684	5.9	1816	6.4	1945	6.9
2000	1505	5.3	1623	5.7	1745	6.2	1869	6.6	1992	7.0
2125	1585	5.6	1695	6.0	1809	6.4	1926	6.8	2043	7.2
2250	1666	5.9	1769	6.2	1876	6.6	1986	7.0	2096	7.4
2375	1748	6.2	1844	6.5	1945	6.9	2048	7.2	2153	7.6
2500	1830	6.5	1921	6.8	2016	7.1	2114	7.5	2213	7.8

CFM	AVAILABLE EXTERNAL STATIC PRESSURE (in. wg)									
	1.2		1.4		1.6		1.8		2.0	
	rpm	vdc	rpm	vdc	rpm	vdc	rpm	vdc	rpm	vdc
1500	1954	6.9	2078	7.3	2194	7.7	2303	8.1	2407	8.5
1625	1990	7.0	2112	7.4	2227	7.9	2336	8.2	2439	8.6
1750	2028	7.2	2148	7.6	2262	8.0	2369	8.4	2472	8.7
1875	2068	7.3	2186	7.7	2298	8.1	2404	8.5	2506	8.8
2000	2111	7.4	2226	7.8	2335	8.2	2440	8.6	2541	9.0
2125	2157	7.6	2268	8.0	2375	8.4	2478	8.7	2577	9.1
2250	2206	7.8	2313	8.2	2417	8.5	2518	8.9	2615	9.2
2375	2257	8.0	2360	8.3	2461	8.7	2560	9.0	2655	9.4
2500	2312	8.2	2411	8.5	2508	8.8	2604	9.2	2697	9.5

High Static 1197-2836 rpm

APPENDIX D — WIRING DIAGRAMS

Wiring Diagrams

50JC**04-06 UNITS					
SIZE	VOLTAGE	CONTROL	PAGE	POWER	PAGE
04-06 Controller (SystemVu™ — Standard)	208/230-3-60	48TC003235	54	48TC003236	55
	460-3-60				
	575-3-60			48TC003237	56

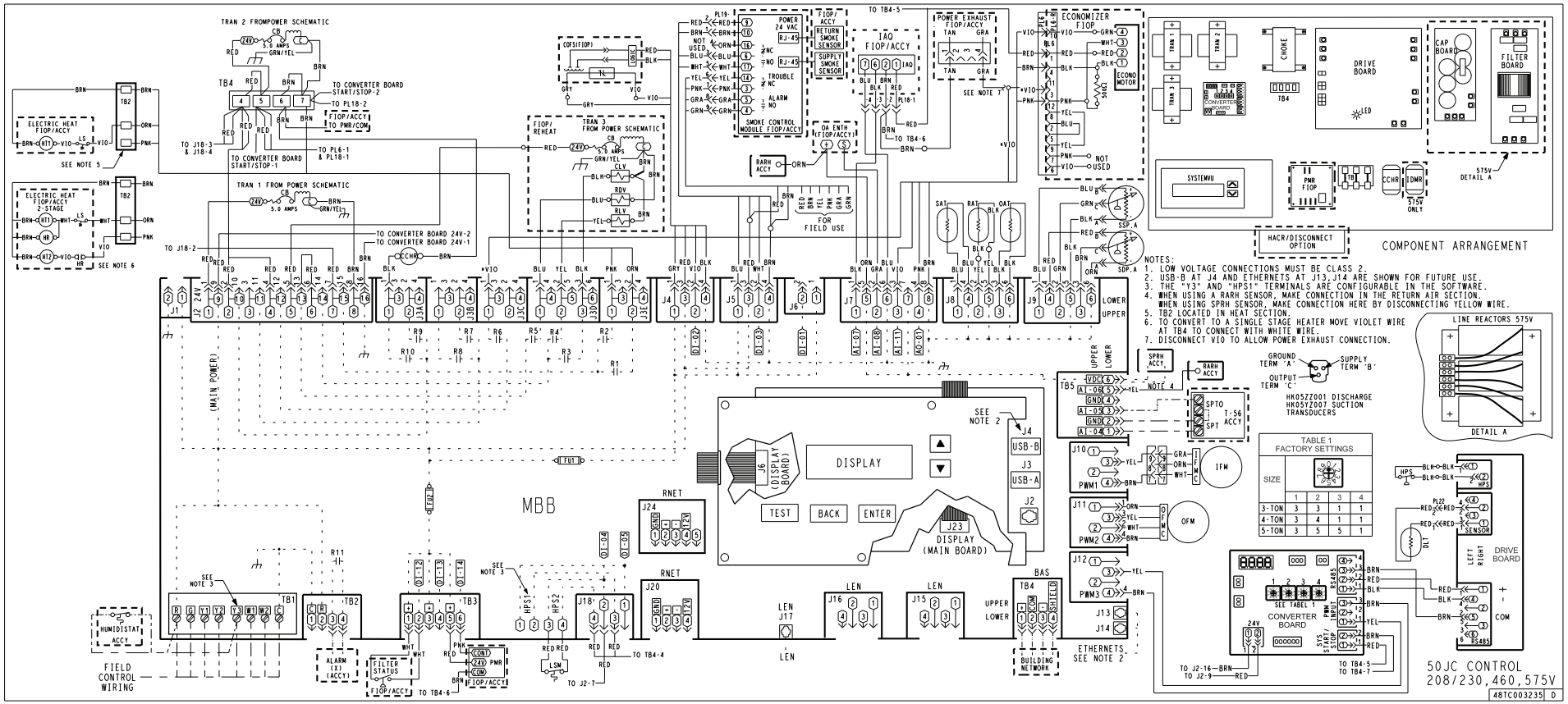

Fig. B — 50JC**04-06 Control Wiring Diagram

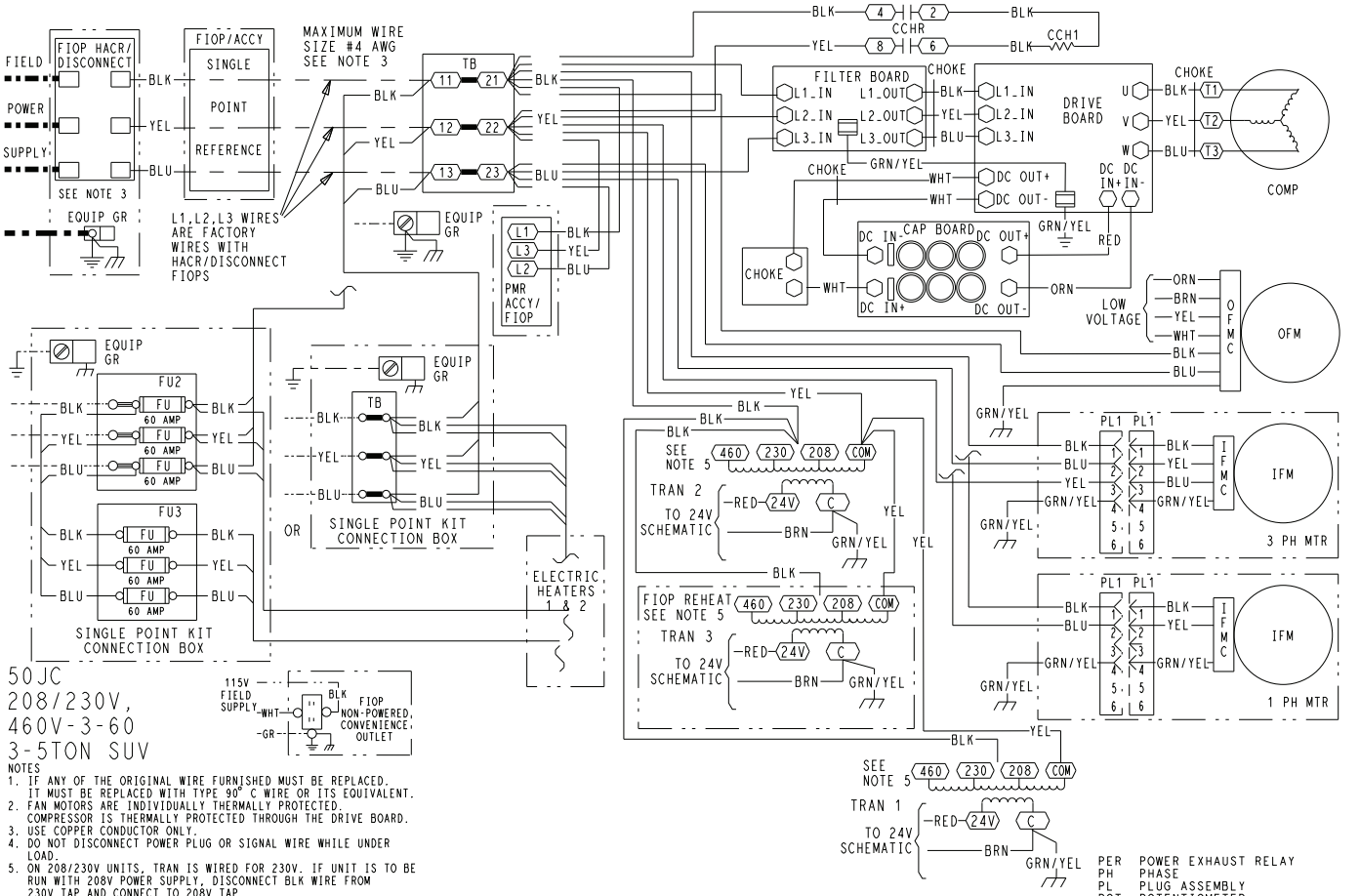

NOTES
1. IF ANY OF THE ORIGINAL WIRE FURNISHED MUST BE REPLACED. IT MUST BE REPLACED WITH TYPE 90° C WIRE OR ITS EQUIVALENT.
2. FAN MOTORS ARE INDIVIDUALLY THERMALLY PROTECTED. COMPRESSOR IS THERMALLY PROTECTED THROUGH THE DRIVE BOARD.
3. USE COPPER CONDUCTOR ONLY.
4. DO NOT DISCONNECT POWER PLUG OR SIGNAL WIRE WHILE UNDER LOAD.
5. ON 208/230V UNITS, TRAN IS WIRED FOR 230V. IF UNIT IS TO BE RUN WITH 208V POWER SUPPLY, DISCONNECT BLK WIRE FROM 230V TAP AND CONNECT TO 208V TAP. ON 460V UNITS, CONNECT BLK WIRE TO THE 460V TAP.

LEGEND

- MARKED WIRE
- TERMINAL (MARKED)
- TERMINAL (UNMARKED)
- TERMINAL BLOCK
- SPLICE
- SPLICE (MARKED)
- FACTORY WIRING
- FIELD CONTROL WIRING
- FIELD POWER WIRING
- CIRCUIT BOARD TRACE
- ACCESSORY OR OPTIONAL WIRING

ACCY	ACCESSORY
AWG	AMERICAN WIRE GAGE
BAS	BUILDING AUTOMATION NETWORK
CC	CONTACTOR,COMPRESSOR
C	COMMON
CAP	CAPACITOR
CB	CIRCUIT BREAKER
CCH	CRANKCASE HEATER
CCHR	CRANKCASE HEATER RELAY
CLV	COOLING LIQUID VALVE
COFS	CONDENSATE OVERFLOW SWITCH
COM	SIGNAL COMMON
COMP	COMPRESSOR MOTOR
DDC	DIRECT DIGITAL CONTROL
EHR	ELECTRIC HEAT RELAY
ENTH	ENTHALPY
ERV	ENERGY RECOVERY VENTILATOR
FB	FUSE BLOCK
FIOP	FACTORY INSTALLED OPTION
FU	FUSE
G	THERMOSTAT FAN CALL
GR(GND)	GROUND
HACR	HEATING, AIR-CONDITIONING, REFRIGERATION BREAKER
HR	HEATER RELAY
HGRH	HOT GAS REHEAT
HPC	HEAD PRESSURE CONTROL
HPS	HIGH PRESSURE SWITCH
HUM	HUMIDISTAT
IAQ	INDOOR AIR QUALITY SENSORS
IFM	INDOOR FAN MOTOR
IFMC	INDOOR FAN MOTOR CONTROL
IFO	INDOOR FAN ON SIGNAL
JMP	JUMPER
L1	LINE 1
LEN	LOCAL EQUIPMENT NETWORK
LS	LIMIT SWITCH
LSM	LIMIT SWITCH (MANUAL RESET)
MBB	MAIN BASE BOARD
MOV	METAL OXIDE VARISTOR
MTR	MOTOR
OAQ	OUTDOOR AIR QUALITY
OAT	OUTDOOR AIR TEMP. SEN
OFM	OUTDOOR FAN MOTOR
OFMC	OUTDOOR FAN MOTOR CONTROL
OL	OVERLOAD
PER	POWER EXHAUST RELAY
PH	PHASE
PL	PLUG ASSEMBLY
POT	POTENTIOMETER
PMR	PHASE MONITOR RELAY
PS	PRESSURE SWITCH
PWM	PULSE WIDTH MODULATION
QT	QUADRUPLE TERMINAL
R	THERMOSTAT POWER
RAT	RETURN AIR TEMP. SEN
RDV	REHEAT DISCHARGE VALVE
RH	RELATIVE HUMIDITY
RLV	REHEAT LIQUID VALVE
RNET	LOCAL ACCESS NETWORK
SAT	SUPPLY AIR TEMP SENSOR
SDP	SYSTEM DISCHARGE PRESSURE
SPRH	SPACE RELATIVE HUMIDITY
SPT	SPACE TEMPERATURE SENSOR
SPTO	SPACE TEMPERATURE OFFSET
SSP	SYSTEM SUCTION PRESSURE
STD	STANDARD
SW	SWITCH
TB	TERMINAL BLOCK
TRAN	TRANSFORMER
W1	1st STAGE OF HEATING CALL
W2	2nd STAGE OF HEATING CALL
Y1	1st STAGE OF COOLING CALL
Y2	2nd STAGE OF COOLING CALL

48TC003236 | D

Fig. C — 50JC04-06 Power Wiring Diagram — 208/230, 460-3-60**

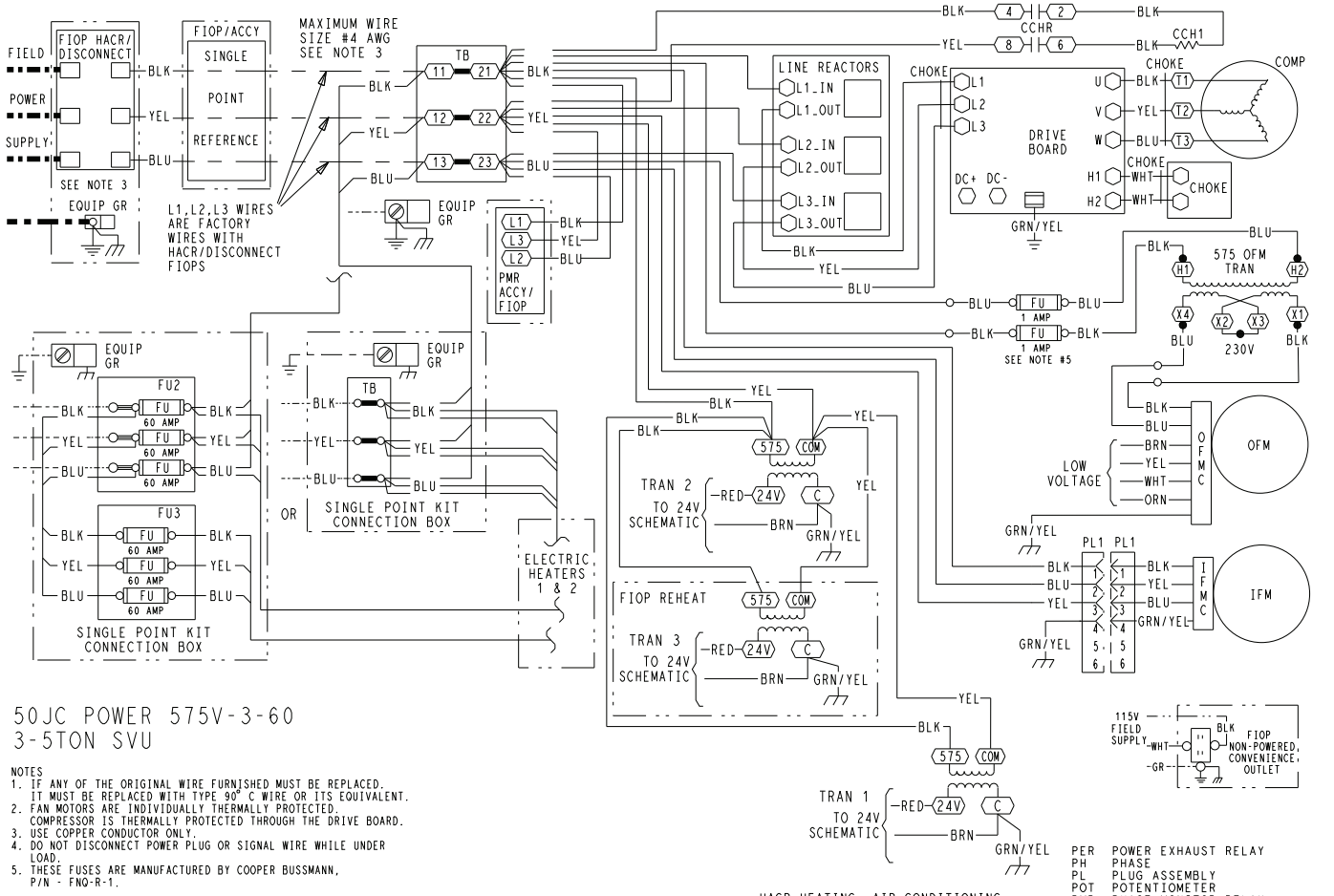

50JC POWER 575V-3-60
3-5TON SVU

NOTES
1. IF ANY OF THE ORIGINAL WIRE FURNISHED MUST BE REPLACED. IT MUST BE REPLACED WITH TYPE 90° C WIRE OR ITS EQUIVALENT.
2. FAN MOTORS ARE INDIVIDUALLY THERMALLY PROTECTED. COMPRESSOR IS THERMALLY PROTECTED THROUGH THE DRIVE BOARD.
3. USE COPPER CONDUCTOR ONLY.
4. DO NOT DISCONNECT POWER PLUG OR SIGNAL WIRE WHILE UNDER LOAD.
5. THESE FUSES ARE MANUFACTURED BY COOPER BUSSMANN, P/N - FNQ-R-1.

LEGEND

- MARKED WIRE
- TERMINAL (MARKED)
- TERMINAL (UNMARKED)
- TERMINAL BLOCK
- SPLICE
- SPLICE (MARKED)
- FACTORY WIRING
- FIELD CONTROL WIRING
- FIELD POWER WIRING
- CIRCUIT BOARD TRACE
- ACCESSORY OR OPTIONAL WIRING

ACCY	ACCESSORY
AWG	AMERICAN WIRE GAGE
AUX	AUXILIARY
BAS	BUILDING AUTOMATION NETWORK
CC	CONTACTOR,COMPRESSOR
C	COMMON
CAP	CAPACITOR
CB	CIRCUIT BREAKER
CCH	CRANKCASE HEATER
CCHR	CRANKCASE HEATER RELAY
CLV	COOLING LIQUID VALVE
COFS	CONDENSATE OVERFLOW SWITCH
COM	SIGNAL COMMON
COMP	COMPRESSOR MOTOR
DDC	DIRECT DIGITAL CONTROL
EHR	ELECTRIC HEAT RELAY
ENTH	ENTHALPY
ERV	ENERGY RECOVERY VENTILATOR
FB	FUSE BLOCK
FIOP	FACTORY INSTALLED OPTION
FU	FUSE
G	THERMOSTAT FAN CALL
GR(GND)	GROUND
HACR	HEATING, AIR-CONDITIONING, REFRIGERATION BREAKER
HR	HEATER RELAY
HGRH	HOT GAS REHEAT
HPC	HEAD PRESSURE CONTROL
HPS	HIGH PRESSURE SWITCH
HUM	HUMIDISTAT
IAQ	INDOOR AIR QUALITY SENSORS
IFM	INDOOR FAN MOTOR
IFMC	INDOOR FAN MOTOR CONTROL
IFO	INDOOR FAN ON SIGNAL
JMP	JUMPER
L1	LINE 1
LEN	LOCAL EQUIPMENT NETWORK
LS	LIMIT SWITCH
LSM	LIMIT SWITCH (MANUAL RESET)
MBB	MAIN BASE BOARD
MOV	METAL OXIDE VARISTOR
MTR	MOTOR
OAQ	OUTDOOR AIR QUALITY
OAT	OUTDOOR AIR TEMP. SEN
OFM	OUTDOOR FAN MOTOR
OFMC	OUTDOOR FAN MOTOR CONTROL
PER	POWER EXHAUST RELAY
PH	PHASE
PL	PLUG ASSEMBLY
POT	POTENTIOMETER
PMR	PHASE MONITOR RELAY
PS	PRESSURE SWITCH
PWM	PULSE WIDTH MODULATION
QT	QUADRUPLE TERMINAL
R	THERMOSTAT POWER
RAT	RETURN AIR TEMP. SEN
RDV	REHEAT DISCHARGE VALVE
RH	RELATIVE HUMIDITY
RLV	REHEAT LIQUID VALVE
RNET	LOCAL ACCESS NETWORK
SAT	SUPPLY AIR TEMP SENSOR
SDP	SYSTEM DISCHARGE PRESSURE
SPRH	SPACE RELATIVE HUMIDITY
SPT	SPACE TEMPERATURE SENSOR
SPTO	SPACE TEMPERATURE OFFSET
SSP	SYSTEM SUCTION PRESSURE
STD	STANDARD
SW	SWITCH
TB	TERMINAL BLOCK
TRAN	TRANSFORMER
W1	1st STAGE OF HEATING CALL
W2	2nd STAGE OF HEATING CALL
Y1	1st STAGE OF COOLING CALL
Y2	2nd STAGE OF COOLING CALL

48TC003237 | D

Fig. D — 50JC04-06 Power Wiring Diagram — 575-3-60**

© 2025 Carrier

START-UP CHECKLIST FOR 50JC**04-06 SINGLE PACKAGE ROOFTOP ELECTRIC COOLING UNIT

(Remove and use for job file)

NOTE: To avoid injury to personnel and damage to equipment or property when completing the procedures listed in this start-up checklist, use good judgment, follow safe practices, and adhere to the safety considerations/information as outlined in preceding sections of this document.

I. PRELIMINARY INFORMATION

MODEL NO _____

JOB NAME _____

SERIAL NO. _____

ADDRESS _____

START-UP DATE _____

TECHNICIAN NAME _____

ADDITIONAL ACCESSORIES

_____

II. PRE-START-UP:

Verify that all packaging materials have been removed from unit	(Y/N) _____
Verify installation of outdoor air hood	(Y/N) _____
Verify that condensate connection is installed per installation instructions	(Y/N) _____
Verify that all electrical connections and terminals are tight	(Y/N) _____
Check that indoor-air filters are clean and in place	(Y/N) _____
Check that outdoor air inlet screens are in place	(Y/N) _____
Verify that unit is level	(Y/N) _____
Check outdoor fan propeller for location in housing/orifice and verify setscrew is tight	(Y/N) _____
Verify that scroll compressors are rotating in the correct direction	(Y/N) _____
Verify installation of thermostat/space sensor	(Y/N) _____
Verify configuration values for electronic controls	(Y/N) _____
Verify that crankcase heaters have been energized for at least 24 hours	(Y/N) _____

III. START-UP

ELECTRICAL

Supply Voltage	L1-L2_____	L2-L3_____	L3-L1_____
Compressor Amps — Speed 1, 2500 rpm	L1_____	L2_____	L3_____
— Speed 2, High, 4500 rpm	L1_____	L2_____	L3_____
Electric Heat Amps (if equipped)	L1_____	L2_____	L3_____
Supply Fan Amps at Max Speed	L1_____	L2_____	L3_____

TEMPERATURES

Outdoor-Air Temperature	_____°F DB (Dry Bulb)	_____°F WB (Wet Bulb)
Return-Air Temperature	_____°F DB	_____°F WB
Cooling Supply Air	_____°F DB	_____°F WB
Electric Heat Supply Air	_____°F	_____°F

PRESSURES

Refrigerant Suction	Circuit A	_____psig	Circuit A Superheat	_____°F
Refrigerant Discharge	Circuit A	_____psig	Circuit A Subcooling	_____°F

Verify refrigerant charge using charging charts (Y/N) _____

GENERAL

Economizer minimum vent and changeover settings to job requirements (Y/N) _____

IV. HUMIDI-MIZER® SYSTEM START-UP

STEPS

1. Use Service Test mode to turn on cooling.
   Turn on COOL TEST CMP SPD to 4500 rpm under Cool Test menu (Y/N) _____

   OBSERVE AND RECORD

   A. Suction pressure _____ psig _____ psig
   B. Discharge pressure _____ psig _____ psig
   C. Entering air temperature _____ °F _____ °F
   D. Liquid temperature at outlet or reheat coil _____ °F _____ °F
   E. Confirm correct rotation for compressor (Y/N) _____
   F. Check for correct ramp-up of outdoor fan motor as condenser coil warms (Y/N) _____
2. Check unit charge per charging chart (Y/N) _____
3. Switch unit to HIGH-LATENT mode (SUBCOOL) by turning Humidi-MiZer test to SUBCOOL under the COOL TEST menu (Y/N) _____

   OBSERVE

   A. Reduction in suction pressure (5 to 7 psi expected) (Y/N) _____
   B. Discharge pressure unchanged (Y/N) _____
   C. Liquid temperature drops to 50 to 55°F range (Y/N) _____
   D. CLV solenoid energized (valve closes for no flow) (Y/N) _____
4. Switch unit to DEHUMID (REHEAT) by turning Humidi-MiZer test to REHEAT under the COOL TEST menu (Y/N) _____

   OBSERVE

   A. Suction pressure increases to normal cooling level (Y/N) _____
   B. Discharge pressure decreases 30 to 50 psi (Y/N) _____
   C. Liquid temperature returns to normal cooling level (Y/N) _____
   D. CLV solenoid energized, valve closes for no flow (Y/N) _____
   E. RDV solenoid energized, valve opens for flow (Y/N) _____
5. Switch unit to OFF by turning Humidi-MiZer test to OFF under the COOL TEST menu, and Compressor and outdoor fan stop, CLV and RDV solenoids de-energized (Y/N) _____

CUT ALONG DOTTED LINE

CUT ALONG DOTTED LINE

© 2025 Carrier